UNCLASSIFIED

AD NUMBER

AD917071

NEW LIMITATION CHANGE

TO

Approved for public release, distribution unlimited

FROM

Distribution authorized to U.S. Gov't. agencies only; Test and Evaluation; FEB 1974. Other requests shall be referred to Tactical Fighter Weapons Center, Nellis AFB, NV.

AUTHORITY

TAC USAF ltr, 30 Apr 1975

THIS PAGE IS UNCLASSIFIED

THIS REPORT HAS BEEN DELIMITED
AND CLEARED FOR PUBLIC RELEASE
UNDER DOD DIRECTIVE 5200.20 AND
NO RESTRICTIONS ARE IMPOSED UPON
ITS USE AND DISCLOSURE.

DISTRIBUTION STATEMENT A

APPROVED FOR PUBLIC RELEASE;
DISTRIBUTION UNLIMITED.

Copy available to DDC does not permit fully legible reproduction

AD917071

TAC PROJECT 73C-014F

Final Report

Copy available to DDC does not permit fully legible reproduction

BSU-11A/B CONICAL FIN IOT&E
(CONSTANT BRACKET)

February 1974

Distribution is limited to US Government agencies only because this document covers the test and evaluation of military hardware (February 1974). Other requests for this document must be referred to HQ TAC/DR, Langley AFB, VA 23665.

TACTICAL FIGHTER WEAPONS CENTER (TAC)

NELLIS AIR FORCE BASE, NEVADA

Copy available to DDC does not permit fully legible reproduction

DDC
RECEIVED
FEB 22 1974
B

TAC PROJECT 73C-014F

BSU-11A/B CONICAL FIN IOT&E
(CONSTANT BRACKET)

FINAL REPORT

February 1974

Prepared by: LELIAN D. McCOY, Lt Col, USAF
Project Manager

Submitted by: WILLIAM A. McCOLLUM, Lt Col, USAF
DCS, Test and Evaluation

Approved by: GORDON F. BLOOD, Maj Gen, USAF
Commander

This report has been reviewed and approved by
Headquarters Tactical Air Command.

Distribution is limited to US Government agencies only because this document covers the test and evaluation of military hardware (February 1974). Other requests for this document must be referred to HQ TAC/DR, Langley AFB, VA 23665.

TACTICAL AIR COMMAND
USAF TACTICAL FIGHTER WEAPONS CENTER
NELLIS AIR FORCE BASE, NEVADA

FOREWORD

This Initial Operational Test and Evaluation was conducted by authority of AFR 80-14, TACR 55-10, and TAC Project Order 73C-014F, April 1973. Active testing began 30 May and ended 24 September 1973. This test was managed by the United States Air Force Tactical Fighter Weapons Center, Nellis AFB, Nevada, and conducted by the 422d Fighter Weapons Squadron, Nellis AFB, and the 4485th Tactical Test Squadron, Eglin AFB, Florida.

The following personnel were responsible for the conduct of the test and preparation of the final report:

TAC Project Officer	R. N. PARKER, Capt, USAF HQ TAC/DRAR
IOT&E Project Manager	L. D. McCOY, Lt Col, USAF USAFTFWC/TEM
Unit Project Officer	D. JACOBSEN, Maj, USAF 422 FWSq/DO
Project Coordinator	F. BURDETTE, Lt Col, USAF USAFTAWC/TEFA
Operations Analyst	S. N. GREENHALGH, Civ USAFTFWC/OA

The assistance by personnel of the 4485th Tactical Test Squadron is gratefully acknowledged.

PRECEDING PAGE BLANK-NOT FILMED

SUMMARY

The BSU-11A/B Conical Bomb Fin was designed as a replacement for the MAU-93/B Fin currently used on the MK 82 low drag general purpose bomb. The purpose of this evaluation was to determine the operational suitability, effectiveness, and limitations of the BSU-11A/B, with particular emphasis on comparing it to the MAU-93/B. Testing, consisting of manual deliveries of inert MK 82 bombs with BSU-11A/B and MAU-93/B fins, was made atdive angles of 15, 30, and 45° on the Nellis ranges, and a dynamic stability study was performed at Eglin AFB. Additionally, all aspects of ground handling and buildup were evaluated, including a timed build-up test and an F-111 aircraft fit check. It was concluded that the quick-attach bolt and clamp mechanism of the BSU-11A/B was unsatisfactory for field use. Statistically, there were no significant differences in dispersion and accuracy of the BSU-11A/B and the MAU-93/B; however, variation in ballistics may become significant in high-time-of-flight deliveries. Stability characteristics were the same; and a 44 percent build-up time was saved with the BSU-11A/B. It was recommended that the BSU-11A/B not be accepted for field use until the quick-attach bolt and clamp mechanism is redesigned.

PRECEDING PAGE BLANK-NOT FILMED

TABLE OF CONTENTS

		Page
	Foreword	iii
	Summary	v
	Table of Contents	vii
	List of Illustrations	ix
	List of Tables	ix
	Abbreviations, Symbols, and Definitions	xi
Paragraphs		
1.	Introduction	1
2.	Purpose of the IOT&E	1
3.	Method of Accomplishment	3
4.	Results and Discussion	6
5.	Integration into Force Structure	19
6.	Conclusions	19
7.	Recommendations	20

PRECEDING PAGE BLANK-NOT FILMED

LIST OF ILLUSTRATIONS

Figure		Page
1	Conical Bomb Fins	2
2	F-4 Loading Configurations	5
3	Variation of Spin Rates in BSU-11A/B and MAU-93/B Bomb Fins	8
4	Fit Test Clearance of BSU-11A/B Bomb Fins on Station 3 (BRU-3 Rack) of an F-111	10
5	Quick-Attach Bolt and Clamp Mechanism on the BSU-11A/B Bomb Fin	18

LIST OF TABLES

Table		Page
1	Release Parameters Evaluated (Nellis AFB)	4
2	Release Parameters Evaluated (Eglin AFB)	6
3	Bomb Fin Dynamic Stability Study	7
4	Bomb Spin Rates Summary	7
5	Timed Build-Up Test	11
6	BSU-11A/B Finned Bomb (Delivery Accuracy Versus Altitude and Dive Angle)	13
7	BSU-11A/B Finned Bombs (Delivery Accuracy Versus Release Airspeed)	14
8	MAU-93/B Finned Bombs (Delivery Accuracy Versus Release Angle, Airspeed, and Altitude)	15
9	Paired Delivery Impacts (MK 82/BSU-11A/B Versus MK 82/MAU-93/B)	16

PRECEDING PAGE BLANK-NOT FILMED

ABBREVIATIONS, SYMBOLS, AND DEFINITIONS

ADTC.....Armament Development and Test Center

AGL.....above ground level

alt.....altitude

CEA.....circular error average

CEP.....circular error probable

deg.....degree(s)

DEP.....deflection error probable

ft.....feet

G.....gravitational force(s)

IOT&E.....initial operational test and evaluation

KTAS.....knots true airspeed

MER..... multiple ejection rack

MIL STD.....Military Standard

MPI.....mean point of impact

MPID.....mean point of impact in deflection

MPIR.....mean point of impact in range

OOAMA.....Ogden Air Materiel Area

REP.....range error probable

Rev/Sec^2.....revolutions per second per second

TAWC.....Tactical Air Warfare Center

TO.....technical order(s)

°.....degree(s)

".....inches

PRECEDING PAGE BLANK-NOT FILMED

FINAL REPORT

TAC PROJECT 73C-014F

BSU-11A/B CONICAL FIN IOT&E
(CONSTANT BRACKET)

1. INTRODUCTION.

a. Operational Requirement. The BSU-11A/B conical fin was designed to provide improved features over the currently used MAU-93/B. An Air Force decision to initiate any quantity production of the BSU-11A/B would be predicated on an ultimate goal of 100 percent conversion from the MAU-93/B to the BSU-11A/B. Evaluation by both Tactical and Strategic Air Commands was necessary as a basis for that decision.

b. Operational Concept. The BSU-11A/B conical fin was envisioned as a replacement for the MAU-93/B as the stabilizing device on the MK 82 for all low drag deliveries.

c. Hardware Description.

(1) The MK 82 is a streamlined, steel-cased bomb; 10.8 inches in diameter; it has an overall length of 91.3 inches with the BSU-11A/B fin assembly installed, and weighs 531 pounds. Inert (concrete filled) MK 82s were used for this test.

(2) The BSU-11A/B conical fin assembly consists of an elongated cone with fins mounted 90° to each other, and is constructed of heavy-gauge steel with riveted joints. The assembly is fastened to the rear of the bomb by a quick-attach ring and one Allen head bolt. A fuze access hole is provided, with an access plate secured by one fastener and a "tuck-under" feature on the forward end, instead of the three fasteners used on the MAU-93/B. The BSU-11A/B weighs the same as the MAU-93/B (21 pounds), is the same length (26-1/8 inches), has the same fin span (15-1/8 inches), and provides the same bomb center of gravity; however, the BSU-11A/B has a greater fin area than the MAU-93/B. Both fins, with fuze access plates installed, are shown for comparison in Figure 1.

2. PURPOSE OF THE IOT&E.

a. Scope. The scope of this evaluation was to determine the operational suitability, effectiveness, and limitations of the BSU-11A/B conical fin under an operational, stockpile-to-target sequence on those aircraft stations representative of all MK 82 carriage/release conditions.

b. Critical Questions and Issues. Not applicable.

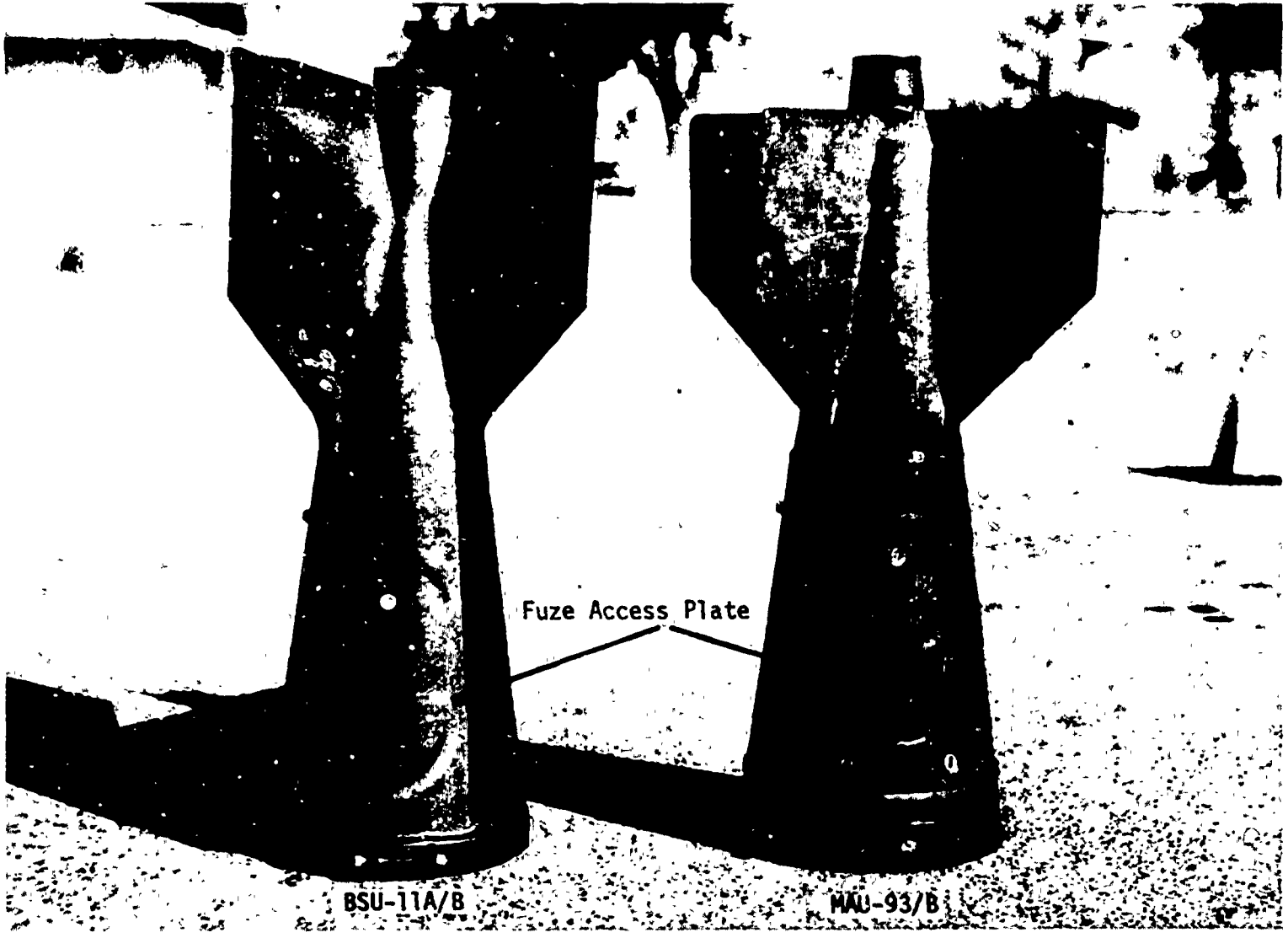

Figure 1. Conical Bomb Fins.

c. Specific Objectives.

(1) Objective A. Determine the suitability of the BSU-11A/B conical fin on the MK 82 when operationally employed using standard storage, buildup, handling, loading, carriage/release procedures, and tactics/techniques during combat and training type operations.

(2) Objective B. Determine the comparative ease of attachment, handling, loading, and bomb fuzing, with emphasis on safety considerations.

(3) Objective C. Determine adequacy of available storage, handling, loading, explosive ordnance disposal (EOD), and flight manuals/procedures.

(4) Objective D. Determine any deficiencies/limitations during all phases of operational employment.

(5) Objective E. Identify any unique training requirements.

(6) Objective F. Verify bomb in-flight stability, dispersion, and accuracy characteristics.

(7) Objective G. Verify structural integrity during all phases of operational employment.

(8) Objective H. Verify ballistics data.

(9) Objective I. Verify reliability/effectiveness.

(10) Objective J. Identify any system or procedural improvements to enhance conical fin capabilities.

(11) Objective K. Identify any requirements for additional testing.

(12) Objective L. Identify any qualitative advantages and disadvantages of the BSU-11A/B versus the MAU-93/B fin.

3. METHOD OF ACCOMPLISHMENT.

a. IOT&E Environment. This evaluation was conducted at Nellis AFB, Nevada and Eglin AFB, Florida. The F-4E aircraft was the primary test vehicle, with two sorties flown using an F-105D and six sorties utilizing an F-4D. The six F-4D sorties were flown at Eglin AFB. Munitions buildup and aircraft loading were accomplished in accordance with standard technical order (TO) procedures.

b. Method of Test.

(1) Nellis AFB.

(a) Nineteen F-4E test sorties were flown to drop 141 MK 82/BSU-11A/B bombs and 19 MK 82/MAU-93/B bombs, using the parameters listed in Table 1 and configurations shown in Figure 2.

Table 1. Release Parameters Evaluated (Nellis AFB).

Dive Angle (Degrees)	Type Release*	Altitude (Ft-AGL)	Airspeeds (KTAS)
15	S & P	2,000	420
	S	2,000	480
	S	2,000	540
30	S	3,000	440
	R	4,000	480
	S & P	3,000	500
	S	3,000	560
45	S	5,000	440
	S	5,000	500
	R	6,000	520
	S & P	5,000	560
	S & P	5,000	580

* S = Manual Single
P = Manual Pair
R = 60 Millisecond Ripple

(b) A fit test was performed by loading four inert MK 82/BSU-11A/B bombs on the BRU-3/A rack of an F-111. The bombs were configured with inert M-904E2 nose fuzes and the ATU-35A/B single-drive assemblies.

(c) A build-up test was made to obtain comparative times for buildup of the MK 82/BSU-11A/B and the MK 82/MAU-93/B configurations.

(d) Two captive flights were made with six MK 82/BSU-11A/B bombs loaded on the centerline of an F-105D. Fin structural integrity and aircraft stability were checked during this portion of the test.

(2) Eglin AFB. Six F-4D sorties were flown, dropping a total of 24 MK 82 bombs using parameters shown in Table 2. Twelve bombs were configured with the BSU-11A/B, and the other 12 with MAU-93/B. Photo-theodolite tracking and computer analysis were utilized to determine and compare in-flight stability of the two types of fin.

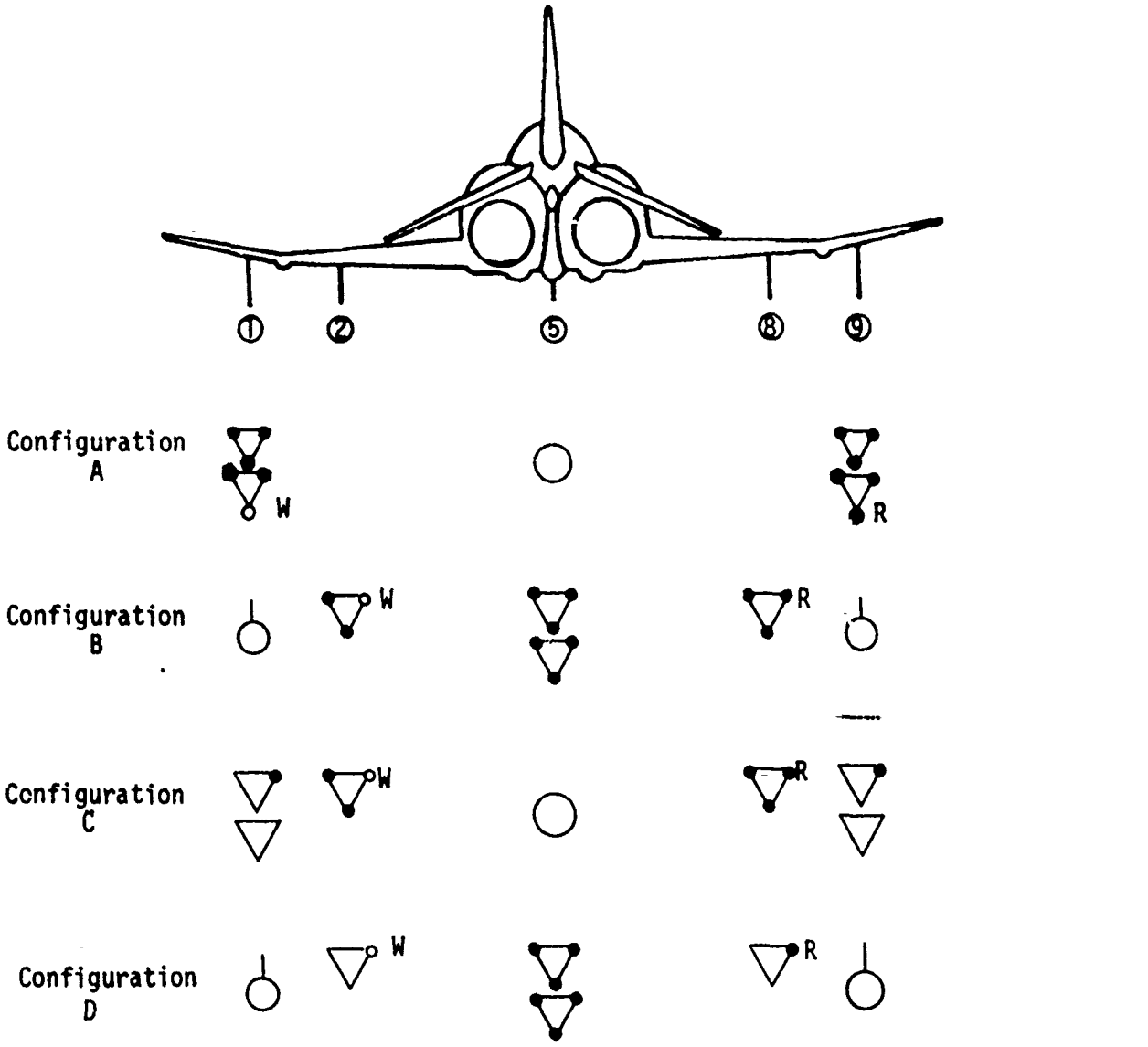

600-gallon Centerline Tank

370-gallon tanks

MK 82/BSU-11A/B

MK 82/MAU-93/B

W - Painted White

R - Painted International Orange

Figure 2. F-4 Load Configurations.

Table 2. Release Parameters Evaluated (Eglin AFB).

Dive Angle (Degrees)	Type Release	Altitude (Ft-AGL)	Airspeed (KTAS)
0	Manual Single	5,000	400

4. RESULTS AND DISCUSSION.

a. Operational Suitability.

(1) Capability to Fulfill Requirement.

(a) The BSU-11A/B was capable of maintaining the stability of the MK 82 bomb during all tactical deliveries. The results of the dynamic stability study, conducted by Tactical Air Warfare Center (TAWC) and Armament Development and Test Center (ADTC) at Eglin AFB, are shown in Table 3. There were 12 effective BSU-11A/B finned bombs and 11 effective MAU-93/B finned bombs dropped. Single releases were made from level flight at 5,000 feet above ground level (AGL) and 400 knots true airspeed (KTAS). The bombs were carried separately on MAU-12 racks, which were modified to impart an extreme nose-down pitch (to the bombs) when released in an attempt to induce oscillations. Phototheodolite cameras tracked each bomb and the data were reduced to obtain space angle (angle between the axis and trajectory of the bomb) throughout the time of fall. The values shown in Table 3 are averages of all bombs dropped. From the data, there was no significant difference in the dynamic stability of the two fin types; that is, their ability to dampen out induced oscillations.

(b) A sampling was made of spin rate buildup during the first 4 seconds after release to determine spin acceleration of the bombs[1]. In all cases, the spin acceleration was linear with time, but varied considerably for both fins. The results of the study are shown in Table 4 and a graph is shown in Figure 3. No correlation was found between spin acceleration and release airspeed and/or altitude. The MAU-93/B fins possessed a much wider variance in acceleration characteristics than the BSU-11A/B.

(2) Operational Compatibility With Concepts, Doctrines, and In-Being Systems. The BSU-11A/B was operationally compatible

[1]Spin acceleration is critical during the first 4 seconds after release for any fuze utilizing zero G sensing for arming.

Table 3. Bomb Fin Dynamic Stability Study.

Time from Release (Seconds)	BSU-11A/B Space Angle*		MAU-93/B Space Angle*	
	Average of Maximum Angle (Degrees)	Average of Minimum Angle (Degrees)	Average of Maximum Angle (Degrees)	Average of Minimum Angle (Degrees)
1-3	18	1	17	1
3-5	7	2	6	1
5-7	5	1	4	1
7-9	4	1	4	1
9-11	6	1	6	1
11-13	11	2	7	2
13-15	9	5	6	3
15-Impact	8	1	5	1

*The angle is between the axis and trajectory of the bomb. There could be a ± 3° error, and accumulative errors could be as high as 5°.

Table 4. Bomb Spin Rates Summary.

Fin Type	Release to Plus 4 Seconds			
	Sample Size	Spin Acceleration (Rev/Sec^2)		
		Low	Average	High
BSU-11A/B	11	0.65	0.94	1.23
MAU-93/B	5	0.48	1.22	2.50

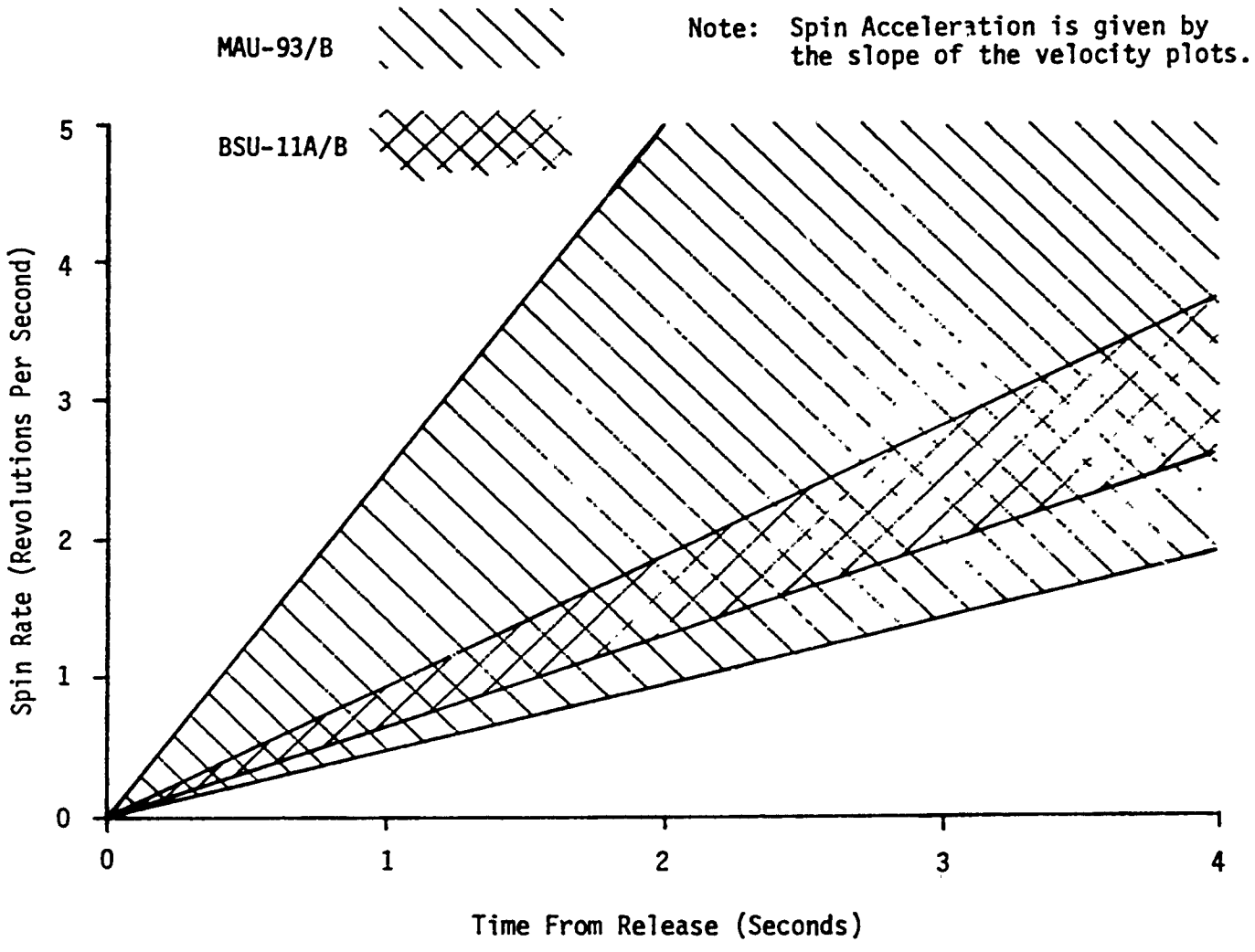

Figure 3. Variation of Spin Rates in BSU-11A/B and MAU-93/B Bomb Fins.

with the concepts, doctrines, and in-being systems.

(a) Nose fuzing was unchanged when the BSU-11A/B fin was used. When loaded in tandem, nose-tail clearance was identical with the MAU-93/B. The tail fuze access hole in the BSU-11A/B was smaller than that of the MAU-93/B; however, there was sufficient clearance for loading all existing tail fuzes. The ATU-35 side-drive access hole was identical in position, size, and shape in both fins. The tail fuzing procedures with the BSU-11A/B installed were unchanged from those used with the MAU-93/B.

(b) During the fit test performed on the F-111, the only station where the BSU-11A/B had reduced clearance from that of the MAU-93/B was on the rear shoulder stations of the BRU-3 rack on the outboard pylon wing stations 3 and 6. Minimum clearance between the BSU-11A/B rear fin corners and the fully-extended flap (wings full forward) was 4.5 inches (Figure 4). This was well within clearance criteria of MIL STD 1289. Nose-tail clearance between tandem bombs was unchanged.

(3) Operational Implication.

(a) Personnel/training requirements. Operational training requirements for the BSU-11A/B were identical to those used with the MAU-93/B. No requirements for new delivery procedures and techniques were identified during the test.

(b) Flight manuals.

1. TO 1F-4C-34-1-1. Aircrew Weapons Delivery Manual (Non-Nuclear) will need to be revised to include reference to the BSU-11A/B if adopted.

2. TO 1F-4C-34-1-2. Aircrew Weapons Delivery Manual (Non-Nuclear) ballistic tables will need to be validated over the entire spectrum of release parameters for accuracy if BSU-11A/B is adopted [see paragraphs 4b(1)(b) and (c)].

3. All Aircrew Weapons Delivery Manuals (Non-Nuclear) for aircraft that carry the MK 82 will need to be revised and validated.

(c) Flight safety. The only flying safety factor identified was the possibility of the BSU-11A/B fin being lost off a bomb in flight due to failure of its single retaining bolt [refer to paragraph 4c(4)].

(4) Logistical Supportability.

(a) Special facilities. The facilities to maintain, test, and logistically support the BSU-11A/B are similar to those required for the MAU-93/B.

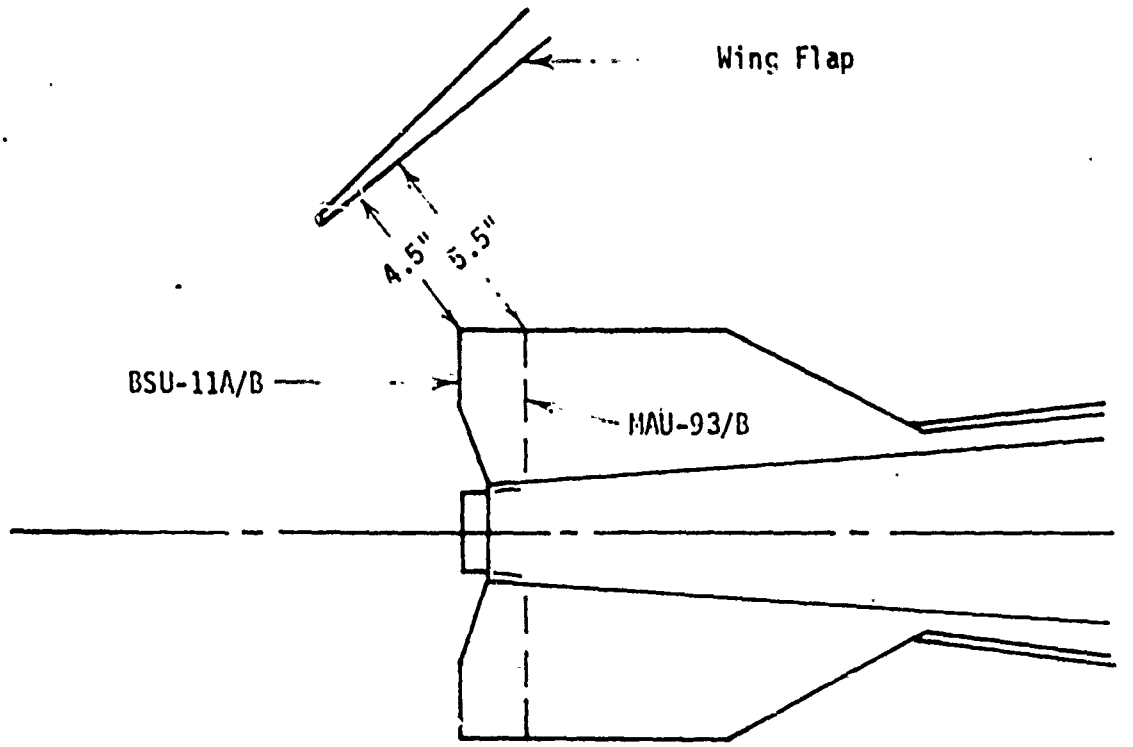

Aft Inboard Shoulder

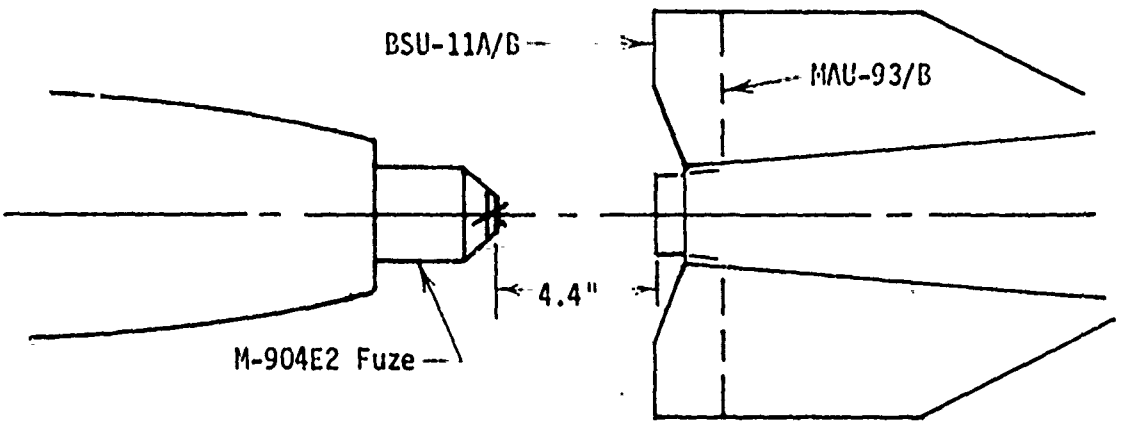

Nose - Tail Clearance of Tandem Bombs

Figure 4. Fit Test Clearance of BSU-11A/B Bomb Fins on Station 3 (BRU-3 Rack) of an F-111.

(b) Maintainability. No unique problems were revealed; however, the retaining bolt on the BSU-11A/B must be changed if it is brought back from a flying mission. This is an undesirable feature [reference paragraph 4c(3)].

(c) Support and test equipment. No special support equipment was required.

(d) Personnel/training requirements. Other than bomb build-up, all handling, loading, and delivery procedures for the BSU-11A/B are identical to those currently used with the MAU-93/B; therefore, no unique training requirements existed. Build-up crews were favorably impressed with the time saving features of the BSU-11A/B. Build-up times were compared by attaching BSU-11A/B and MAU-93/B fins on MK 82 inert bombs. The same crew, consisting of five personnel including one supervisor, was used to build-up 36 bombs, 18 for each type of fin. The crew had extensive experience with the MAU-93/B, but no operational experience with the BSU-11A/B (outside of a familiarization session). The BSU-11A/B fins for this test were packed in individual cardboard shipping boxes, whereas the MAU-93/B fins were packed (50 each) in palletized containers. Since the BSU-11A/B will be shipped in palletized containers should it become a production item, time required for unpacking the fins was disregarded and all fins were removed from packing containers before the timing was started. Hand tools were used and the crew was briefed to work at normal speed. The results of the build-up test are shown in Table 5. A time saving of 44 percent was realized as a result of the quick-attach ring on the BSU-11A/B, and a single attachment bolt versus the six set screws of the MAU-93/B.

Table 5. Timed Build-Up Test.

Type Fin	Time to Build-Up 18 Bombs
BSU-11A/B	14 Minutes, 3 Seconds
MAU-93/B	25 Minutes, 18 Seconds

(e) Technical manuals. Changes to technical manuals would be required if the BSU-11A/B is adopted.

(f) Mobility. Not applicable.

(g) Ground safety. The BSU-11A/B has 127 inches of fin edges compared to 73 inches on the MAU-93/B. These edges are sharper on the BSU-11A/B and run the full length of the fin assembly (Figure 1), necessitating more careful handling by servicing personnel during build-up and loading to avoid unnecessary cuts and skin abrasions.

b. Operational Effectiveness.

(1) All BSU-11A/B finned bombs that were dropped at Nellis on the single and paired releases contributed to a data sample of 118 effective bombs. The MAU-93/B finned bombs that were dropped on the paired releases resulted in a data sample of 16 effective bombs. One of each type of bomb was not effective due to release system malfunctions and/or improper switch settings.

(a) The bomb impact data were analyzed by type of munition and delivery parameters to find any significant differences between either accuracy or dispersion of the two fin types. Tables 6, 7, and 8 contain the reduced data from which these analyses were made. Statistical tests were conducted at the 90 percent confidence level[2], using the Central Limit Theorem and the Student's t-Distribution. These tests indicated that there was no significant difference between the accuracy or dispersion of the 118 BSU-11A/B MK 82s delivered and that of the 16 MAU-93/B MK 82s. The bomb deliveries were also evaluated by delivery altitude, airspeed, and dive angles; and again, no significant trends were indicated.

(b) On paired drops, the BSU-11A/B finned bombs hit long for an average of 11.3 feet (Table 9) when compared to the MK 82/MAU-93/B impacts. Although this difference was statistically insignificant at the tactical delivery altitudes used, a trend was indicated which may become important at higher altitudes. In light of this apparent trend, a verification of ballistic tables is in order if the BSU-11A/B is adopted (see Table 9). No other differences in flight characteristics of the two fin types were evident during the paired drops.

(c) On the 12-bomb (one MAU-93/B and 11 BSU-11A/B finned bombs) ripple release from a 30° dive angle, a pattern length of 377 feet was obtained. This compares to a length of 176 feet given in the ballistic tables in TO 1F-4C-34-1-2 for MAU-93/B finned bombs. The last two bombs in the drop pattern had excessive spacing from the rest of the group. On the 12-bomb ripple from 45° dive, the pattern length was 212 feet. This compares to a given pattern length of 125 feet. The impact pattern from the 45° drop was relatively uniform. In both cases, the MAU-93/B finned bombs were released first and impacted on the leading edge of the pattern with approximately average spacing from the second (BSU-11A/B finned) bomb. The cause of the increased pattern length over that given in the tables could not be determined because exact release parameters were unknown.

(d) Two captive flights were flown by an F-105D carrying six BSU-11A/B finned MK 82 bombs on the centerline multiple ejection

[2]The 90 percent confidence level was selected as a realistic criteria for field/operational evaluations.

Table 6. BSU-11A/B Finned Bomb (Delivery Accuracy Versus Altitude and Dive Angle).

Release Parameters			No. of Bombs	CEP (ft)	CEA (ft)	MPIR (ft)	MPID (ft)	With Respect to Target		With Respect to MPI	
Airspeed (KTAS)	Dive Angle (deg)	Delivery Altitude (ft-AGL)						DEP (ft)	REP (ft)	DEP (ft)	REP (ft)
420 to 540	15	2,000	35	167	228	-2	-27	52	161	54	149
440 to 560	30	3,000	35	112	135	-5	-4	54	92	49	93
440 to 580	45	5,000	48	161	196	73	-63	97	114	92	88
All Scores			118	164	193	34	-3	58	127	73	127

NOTE: All scores have been adjusted for wind.

Table 7. BSU-11A/B Finned Bombs (Delivery Accuracy Versus Release Airspeed).

Release Parameters			No. of Bombs	CEP (ft)	CEA (ft)	MPID (ft)	MPIR (ft)	With Respect to Target		With Respect to MPI	
Airspeed (KTAS)	Dive Angle (deg)	Delivery Altitude (ft-AGL)						DEP (ft)	REP (ft)	DEP (ft)	REP (ft)
420	15	2,000	16	172	277	53	-50	66	130	72	114
480	15	2,000	10	245	255	6	-25	53	242	48	229
540	15	2,000	9	133	235	11	17	27	133	37	116
440	30	3,000	10	79	136	12	22	41	50	52	66
440	45	5,000	14	215	220	73	-33	134	149	74	133
440	30/45	3/5,000	24	174	185	48	-10	96	109	93	109
500	30	3,000	15	131	144	-17	-14	67	100	50	88
500	45	5,000	14	116	147	89	-79	67	67	63	73
500	30/45	3/5,000	29	129	145	34	-45	67	80	79	82
560	30	3,000	10	114	123	-5	-17	46	94	46	99
560	45	5,000	17	165	186	108	-100	108	78	52	96
560	30/45	3/5,000	27	129	163	66	-69	94	92	68	84

NOTE: All scores have been adjusted for wind.

Table 8. MAU-93/B Finned Bombs (Delivery Accuracy Versus Release Angle, Airspeed, and Altitude).

Release Parameters			No. of Bombs	CEP (ft)	CEA (ft)	MPID (ft)	MPIR (ft)	With Respect to Target		With Respect to MPI	
Airspeed (KTAS)	Dive Angle (deg)	Delivery Altitude (ft-AGL)						DEP (ft)	REP (ft)	DEP (ft)	REP (ft)
420	15	2,000	5	73	93	11	-46	54	41	43	45
500	30	3,000	5	181	154	-57	-5	57	123	87	117
560	45	5,000	5	165	214	97	-146	113	117	66	109
*All	All	All	16	143	153	25	-62	76	91	65	64

NOTE: All scores have been adjusted for wind.
*Includes one delivery at 580 knots, 45° dive angle, from 5,000 feet AGL.

Table 9. Paired Delivery Impacts (MK 82/BSU-11A/B Versus MK 82/MAU-93/B).

Release Parameters			Distance Between Craters (Ft)	BSU-11A/B Long * (Ft)
Airspeed	Dive Angle (Deg)	Release Altitude (Ft)		
420	15	2,000	19	2
	15	2,000	28	26
	15	2,000	20	14
	15	2,000	17	11
	15	2,000	20	4
500	30	3,000	39	34
	30	3,000	11	2
	30	3,000	15	8
	30	3,000	17	0
560	45	5,000	19	14
	45	5,000	26	16
	45	5,000	18	4
	45	5,000	22	15
	45	5,000	27	8
		Average	21.3	11.3

*In the direction of the line of flight, the MK 82/BSU-11A/B bomb impacted long with respect to the MK 82/MAU-93/B bomb.

Copy available to DDC does not
permit fully legible reproduction

rack (MER). This aircraft and configuration was felt to represent the most severe stress environment that would be encountered on a tactical aircraft during subsonic maneuvers. The total time flown was 1.7 hours; 44 minutes of the two flights were spent at Mach 0.9, 1,000 feet AGL, with numerous high gravitational force (G) turns. The fin retaining bolts were changed after the first flight and the fins were inspected after each flight. There was no indication of structural weakness or damage.

(2) The comparative effectiveness was as follows:

(a) The operational effectiveness/reliability of the BSU-11A/B was comparable to the MAU-93/B except as noted in paragraph 4c below. Statistically, test results indicated that the dive bombing tables for the MK 82 contained in TO 1F-4C-34-1-2 are valid for the BSU-11A/B finned bombs. However, the long impact trend may become significant at higher delivery altitudes and should be investigated further. This evaluation did not attempt to examine the entire spectrum of parameters contained in the ballistic tables. No releases were accomplished above 6,000 feet AGL.

(b) There was no significant difference in handling and loading qualities between the two fins; however, the MAU-93/B tips over easily when placed tail down, since the tail cone extends beyond the fins. The BSU-11A/B, on the other hand, was very stable because the fins extend slightly beyond the center cone (Figure 1). This improved stability is desirable since build-up operations will be in unimproved areas at times. Standing the fins tail down is a good method to prevent dirt and debris from being picked up on the forward mating surface.

(c) The only apparent advantage of the BSU-11A/B over the MAU-93/B was the time savings realized during fin attachment and removal/replacement of the fuze access plate. The only disadvantages of the BSU-11A/B were the deficiencies outlined in paragraph 4c below.

c. Operational Limitations. The deficiencies or limitations found during the IOT&E were in the design of the quick-attach bolt and clamp mechanism of the BSU-11A/B (Figure 5).

(1) Prior to start of testing, a box of hardened steel bolts was received to replace the stainless steel bolts that came with the fins; the torque requirement given was 175 $\pm$ 50 inch-pounds. A torque of 170 inch-pounds was used on the first bombs built up. At that torque, one bolt failed and most of the others were distorted. An examination of the broken bolt revealed that it met the design hardness specifications, but had small fatigue cracks. Ogden Air Materiel Area (OOAMA)

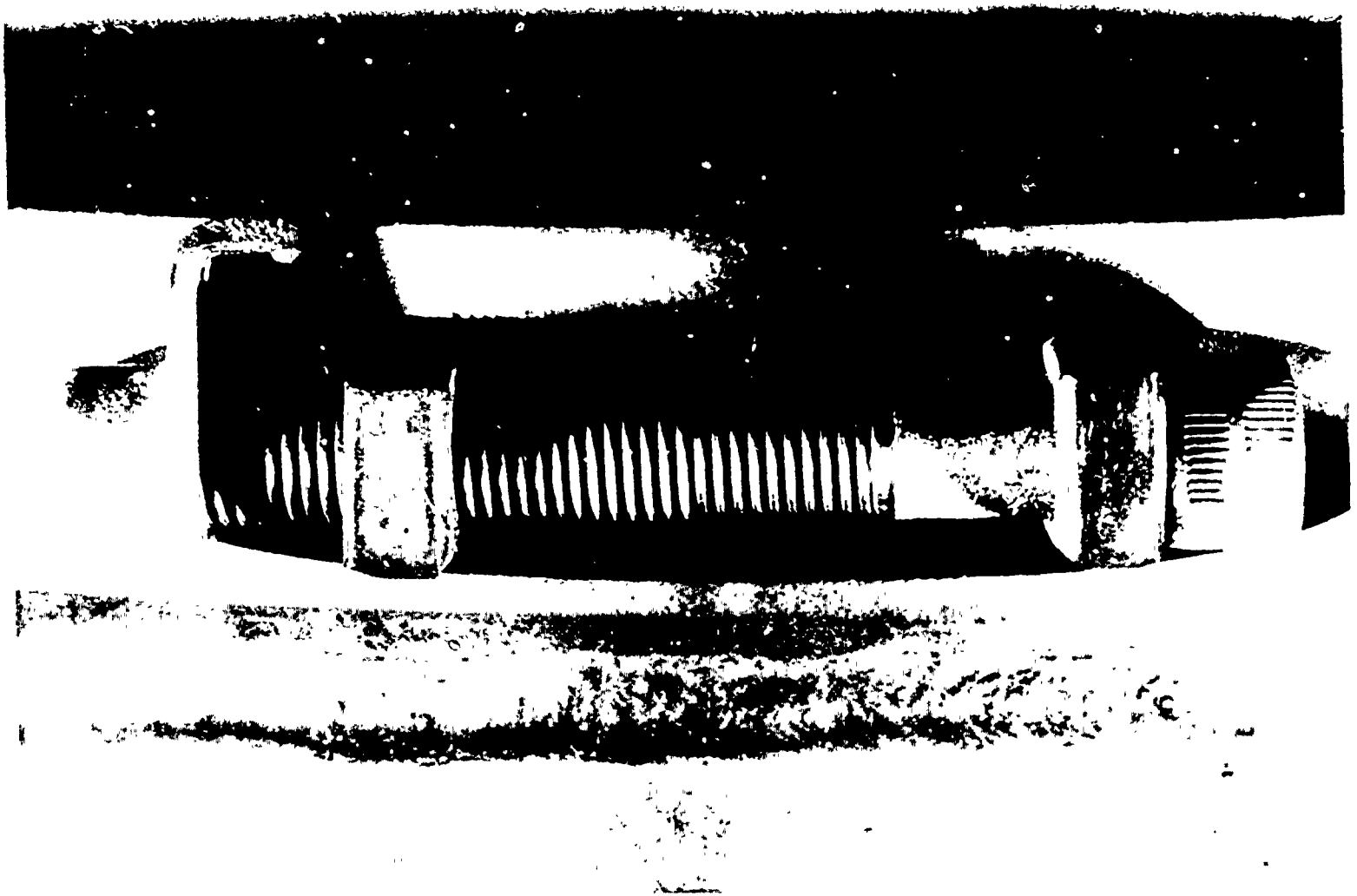

Figure 5. Quick-Attach Bolt and Clamp Mechanism on the BSU-11A/B Bomb Fin.

Copy available to DDC does not
permit fully legible reproduction

reduced the torque range to 125 to 150 inch-pounds, and allowed the original stainless steel bolts to be used, provided the fin was checked for tightness after torquing. A torque of 130 inch-pounds was then used; however, one of the stainless steel bolts broke at that torque. A subsequent examination revealed the bolt was faulty. The bolt problems seemed to be caused by the failure of the locking nut to seat itself flush on the quick-attach ring flange. This resulted from binding of the nut wing on the fin body as it slid along while the bolt was being torqued. A constantly changing, bending torque was transmitted to the bolt because the nut was askew; consequently, the bolts failed at a relatively low torque. However, if the nut was kept flush against the quick-attach ring flange as the bolt was screwed in, no problems occurred. After this technique was discovered, no further bolt failures were experienced.

(2) During the routine buildup, one additional problem occurred which contributed to bolt/attachment deficiencies: the bolt threads were distorted by being forced against the side of the hole. This caused a false torque reading and resulted in the fin becoming loose during preloading handling.

(3) Director, Materiel Management/MMNTM message 062240Z Mar 73 (Interim Inspection and Installation Procedures for the BSU-11A/B Fin) contained a warning note: "The retaining band bolt is restricted to one flight. If fin and bomb are returned for some reason, the bolt will be replaced." Interviews with pilots who had recent Southeast Asia combat experience indicated that bombs were frequently returned. Thus, the one-flight restriction on the retaining band bolt is highly undesirable, and a fix is required if the BSU-11A/B is to become a stock item.

(4) Failure of the attachment bolt will result in the fin coming off the bomb. For this reason, the problems associated with the bolt are critical, and the design tested was unsatisfactory for field use.

5. <u>INTEGRATION INTO FORCE STRUCTURE</u>. To be supplied by TAC/XP.

6. <u>CONCLUSIONS</u>.

a. The BSU-11A/B was suitable as a conical fin on the MK 82 when operationally employed.

b. There were no significant differences in handling, loading, fuzing, and safety requirements, and attachment of the BSU-11A/B was accomplished in approximately 44 percent less time than the MAU-93/B.

c. Changes to present TOs would be required if the BSU-11A/B is adopted.

d. The quick-attach bolt and clamp mechanism of the BSU-11A/B was unsatisfactory for field use.

Copy available to DDC does not
permit fully legible reproduction

e. There were no unique training requirements associated with the BSU-11A/B.

f. There were no significant differences in the dispersion, in-flight stability, and accuracy characteristics of the BSU-11A/B compared to the MAU-93/B.

g. The BSU-11A/B is structurally sound.

h. Statistically, the ballistics tables in TO 1F-4C-34-1-2 were satisfactory for MK 82/BSU-11A/B bombs using release parameters in Table 1; however, a long impact trend was apparent.

i. The BSU-11A/B reliability/effectiveness was degraded by a deficiency in its quick-attach bolt and clamp mechanism.

j. An effective design change will be required prior to acceptance of the BSU-11A/B.

k. A build-up test is necessary after recommended design changes have been completed.

l. The only apparent advantage of the BSU-11A/B was the time savings realized from the quick-attach feature and the fuze access plate.

7. **RECOMMENDATIONS**. It is recommended that:

a. The BSU-11A/B not be accepted for field use until the quick-attach bolt and clamp mechanism is redesigned and operationally tested. The hardware changes listed below should be examined as possible solutions to this deficiency. (OPR: CSAF/XOOW).

(1) The quick-attach ring could be spring-loaded IN instead of OUT. This may provide a fail-safe system. In case the bolt should break, the fin would not be lost as in the present design. This change would probably require that load crews be provided with a simple spreader tool to open the ring as the fin is installed on the bomb.

(2) The locknut could be clamped to the quick-attach ring flange by having three wings on the nut (instead of the one presently used) and clamping them to the ring flange.

(3) The sharp edges on the holes through the ring flange could be rounded to prevent thread damage on the retaining bolt.

(4) The retaining bolt strength and/or size could be increased.

b. The adequacy of the ballistics tables above 6,000 feet AGL for MK 82/BSU-11A/B bombs be investigated if further testing is conducted. (OPR: AFATL/DLYE).

REPORT DOCUMENTATION PAGE		READ INSTRUCTIONS BEFORE COMPLETING FORM
1. REPORT NUMBER TAC PROJECT 73C-014F	2. GOVT ACCESSION NO.	3. RECIPIENT'S CATALOG NUMBER
4. TITLE (and Subtitle) BSU-11A/B CONICAL FIN IOT&E (CONSTANT BRACKET)		5. TYPE OF REPORT & PERIOD COVERED FINAL REPORT 30 May - 24 Sep 73
		6. PERFORMING ORG. REPORT NUMBER
7. AUTHOR(s) LELIAN D. McCOY, Lt Col, USAF Project Manager		8. CONTRACT OR GRANT NUMBER(s)
9. PERFORMING ORGANIZATION NAME AND ADDRESS USAFTFWC/CC Nellis AFB NV 89110		10. PROGRAM ELEMENT, PROJECT, TASK AREA & WORK UNIT NUMBERS
11. CONTROLLING OFFICE NAME AND ADDRESS HQ TAC/DR Langley AFB VA 23665		12. REPORT DATE February 1974
		13. NUMBER OF PAGES 32
14. MONITORING AGENCY NAME & ADDRESS(if different from Controlling Office) N/A		15. SECURITY CLASS. (of this report)
		15a. DECLASSIFICATION/DOWNGRADING SCHEDULE

16. DISTRIBUTION STATEMENT (of this Report)

Distribution is limited to US Government agencies only because this document covers the test and evaluation of military hardware (February 1974). Other requests for this document must be referred to HQ TAC/DR, Langley AFB, VA 23665.

17. DISTRIBUTION STATEMENT (of the abstract entered in Block 20, if different from Report)

18. SUPPLEMENTARY NOTES

19. KEY WORDS (Continue on reverse side if necessary and identify by block number)

BSU-11A/B Conical Bomb Fin
F-4D, F-4E, F-105D and F-111 Aircraft
MAU-93/B Fin
MK 82 Low Drag General Purpose Bomb
Quick-Attack Bolt and Clamp

20. ABSTRACT (Continue on reverse side if necessary and identify by block number)

The BSU-11A/B Conical Bomb Fin was designed as a replacement for the MAU-93/B fin currently used on the MK 82 low drag general purpose bomb. The purpose of this evaluation was to determine the operational suitability, effectiveness, and limitations of the BSU-11A/B, with particular emphasis on comparing it to the MAU-93/B. Testing, consisting of manual deliveries of inert MK 82 bombs with BSU-11A/B and MAU-93/B fins, was made at dive angles of 15, 30, and 45° on the Nellis ranges, and a dynamic stability study was performed (continued)

DD FORM 1 JAN 73 1473 EDITION OF 1 NOV 65 IS OBSOLETE

UNCLASSIFIED

SECURITY CLASSIFICATION OF THIS PAGE (When Data Entered)

20. ABSTRACT (Continued)

at Eglin AFB. Additionally, all aspects of ground handling and buildup were evaluated, including a timed build-up test and an F-111 aircraft fit check. It was concluded that the quick-attach bolt and clamp mechanism of the BSU-11A/B was unsatisfactory for field use. Statistically, there were no significant differences in dispersion and accuracy of the BSU-11A/B and the MAU-93/B; however, variation in ballistics may become significant in high-time-of-flight deliveries. Stability characteristics were the same; and a 44 percent build-up time was saved with the BSU-11A/B. It was recommended that the BSU-11A/B not be accepted for field use until the quick-attach bolt and clamp mechanism is redesigned.