UNCLASSIFIED

AD NUMBER

AD909673

NEW LIMITATION CHANGE

TO

Approved for public release, distribution unlimited

FROM

Distribution authorized to U.S. Gov't. agencies only; Test and Evaluation; Feb 1973. Other requests shall be referred to Air Force Armament Lab., Eglin AFB, Fl.

AUTHORITY

USADTC ltr, 14 Mar 1979

THIS PAGE IS UNCLASSIFIED

THIS REPORT HAS BEEN DELIMITED
AND CLEARED FOR PUBLIC RELEASE
UNDER DOD DIRECTIVE 5200.20 AND
NO RESTRICTIONS ARE IMPOSED UPON
ITS USE AND DISCLOSURE.

DISTRIBUTION STATEMENT A

APPROVED FOR PUBLIC RELEASE;
DISTRIBUTION UNLIMITED.

Best Available Copy

AFATL-TR-73-18

AD909673

ENGINEERING DEVELOPMENT OF THE FLUIDIC FREE-FLIGHT SENSOR FOR USE IN BOMB FUZES

AVCO PRECISION PRODUCTS DIVISION

TECHNICAL REPORT AFATL-TR-73-18

FEBRUARY 1973

D D C
RECEIVED
MAY 4 1973
C

Distribution limited to U. S. Government agencies only; this report documents test and evaluation; distribution limitation applied February 1973. Other requests for this document must be referred to the Air Force Armament Laboratory (DLJF), Eglin Air Force Base, Florida 32542.

AIR FORCE ARMAMENT LABORATORY

AIR FORCE SYSTEMS COMMAND • UNITED STATES AIR FORCE

EGLIN AIR FORCE BASE, FLORIDA

Engineering Development Of The

Fluidic Free-Flight Sensor For Use In Bomb Fuzes

John V. Murphy

Distribution limited to U. S. Government agencies only; this report documents test and evaluation; distribution limitation applied February 1973. Other requests for this document must be referred to the Air Force Armament Laboratory (DLJF), Eglin Air Force Base, Florida 32542.

FOREWORD

This report was prepared by Avco Precision Products Division, Richmond, Indiana, under contract F08635-72-C-0003 with the Air Force Armament Laboratory, Eglin Air Force Base, Florida. The report covers work done during the period August 1971 through December 1972. Captain Robert V. Slater (DLJF) was Program Monitor for the Armament Laboratory.

This technical report has been reviewed and is approved.

FENDRICK J. SMITH, JR. Colonel, USAF
Chief, Fuzes and Munition Control Systems Division

ABSTRACT

The objective of this development program was to determine the feasibility of a fluidic free-flight sensor (FFFS) for use with general purpose and cluster bomb fuzes. The FFFS must establish that the bomb has been safely released, the velocity of the bomb is 200 feet per second or greater, and that the bomb is in a free-fall condition for at least two seconds during the first four seconds after lanyard initiation. These requirements were met by designing an acceleration sensor for sensing free flight and a mechanical arming linkage, both of which are powered by ram air from the bomb slip stream. A ram air pressure regulator was provided so that air pressure used to drive the free-flight sensor and arming linkage remained constant at all velocities above 200 feet per second. The arming linkage was bias loaded so a ram air pressure equivalent to 200 feet per second is required to perform the arming function. One FFFS was fabricated and bench tested by the contractor to determine adequacy of the design and two were delivered for captive flight and drop tests. The two delivered FFFS's were each equipped with two pressure switches and one microswitch to monitor regulator output pressure, sensor function, and arming function during test. A recorder was provided to record the action of the three monitoring switches during drop test. Flight tests and drop tests have indicated feasibility of the FFFS to determine that the bomb has been safely dropped from the aircraft and is in a free-flight condition.

Distribution limited to U. S. Government agencies only; this report documents test and evaluation; distribution limitation applied February 1973. Other requests for this document must be referred to the Air Force Armament Laboratory (DLJF), Eglin Air Force Base, Florida 32542.

(The reverse of this page is blank.)

TABLE OF CONTENTS

Section	Title	Page
I.	INTRODUCTION	1
II.	REQUIREMENTS	3
	GENERAL	3
	DESIGN REQUIREMENTS	3
	FABRICATION REQUIREMENTS	3
	FUNCTIONAL SEQUENCE REQUIREMENTS	4
III.	DESIGN	5
	GENERAL	5
	DETAIL DESIGN	6
IV.	CONTRACTOR TESTING	15
	TEST SUMMARY	15
	PRESSURE REGULATOR ACCURACY TEST	15
	FREE-FLIGHT SENSITIVITY, HYSTERESIS, AND TIMER ACCURACY TEST	19
	VIBRATION SENSITIVITY TEST	22
	FORCED EJECTION COMPATIBILITY TEST	27
	HIGH ALTITUDE OPERATION TEST	28
	HIGH DRAG COMPATIBILITY TEST	31
	NOZZLE AND NOSE CONE VENT EFFICIENCY TEST	33

LIST OF FIGURES

Figure	Title	Page
1.	Fluidic Free-Flight Sensor for use with Bomb Fuzes	2
2.	Fluidic Accelerometer	5
3.	Schematic Diagram of Fluidic Free-Flight Sensor	7
4.	Fluidic Free-Flight Sensor Block Diagram	8
5.	Air Intake and Vent System	9
6.	Fluidic Free-Flight Sensor Section View	10
7.	Fluidic Free-Flight Sensor Recorder with Record Sample	13
8.	Fluidic Free-Flight Sensor Recorder Wiring Diagram	14
9.	Curve of Regulator Pressure Versus Supply Pressure	18
10.	Fluidic Free-Flight Sensor Altitude Test	29

LIST OF TABLES

Table	Title	Page
I.	Pressure Regulator Accuracy Test Results	17
II.	Free-Flight Sensitivity, Hysteresis, and RC Timer Accuracy Test Results (3/8-Inch-Diameter Spherical Masses)	20
III.	Free-Flight Sensitivity, Hysteresis, and RC Timer Accuracy Test Results (1/4-Inch-Diameter Spherical Masses)	21
IV.	Vibration Sensitivity Test Results (3/8-Inch-Diameter Spherical Mass)	23
V.	Vibration Sensitivity Test Results (3/8-Inch-Diameter Spherical Mass)	24
VI.	Vibration Sensitivity Test Results (1/4-Inch-Diameter Spherical Mass)	25
VII.	Vibration Sensitivity Test Results (1/4-Inch-Diameter Spherical Mass)	26
VIII.	Forced Ejection Compatibility Test Results	27
IX.	High Altitude Operation Test Results	30
X.	High Drag Compatibility Test Results	32
XI.	Nozzle and Nose Cone Vent Efficiency Test Results	34

(The reverse of this page is blank.)

SECTION I

INTRODUCTION

The objective of the effort reported herein was to determine feasibility of a fluidic free-flight sensor (FFFS) for use with general purpose and cluster bomb fuzes (Figure 1).

The FFFS is a means whereby the requirements of MIL-STD-1316A, paragraph 4.3.1 can be met. It provides safe separation and senses a post-launch environmental condition, which unlocks or arms the interrupted explosive train using energy obtained from the post-launch environment. Environmental sensors used in the past to remove an interrupter were of the arming vane type. These use external arming wires which have failed on several occasions and allowed the fuze to arm while attached to the aircraft.

The FFFS is designed to fit into the nose of an M117 or similar bomb and is initiated by a lanyard similar to the one used with the FMU-54A/B Fuze.

A fluidic system was selected to meet the requirements of MIL-STD-1316A because of the sensitivity of fluidics to very small environmental stimuli encountered within a low drag bomb. Friction forces, in a mechanical system, render it too insensitive to accurately monitor free-fall environment. The requirement that energy for arming must be obtained from the environment makes a ram air driven fluidic system very attractive. The FFFS is compatible with the ram air driven generator which supplies power to electric fuzes and will eliminate stored energy in bomb fuzes. This advance in bomb fuze technology will reduce the cost and increase the storage life of the bomb fuzes.

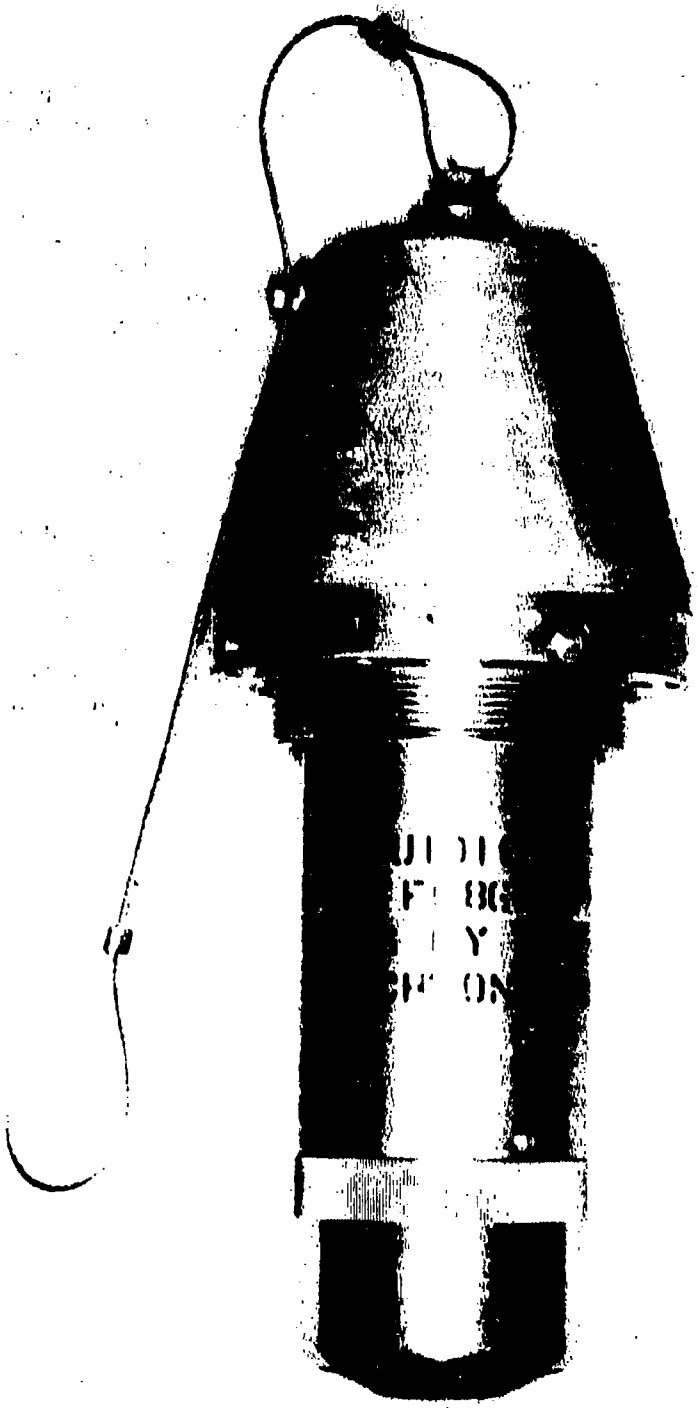

Figure 1. Fluidic Free-Flight Sensor for use with Bomb Fuzes

SECTION II

REQUIREMENTS

GENERAL

The fluidic free-flight sensor (FFFS) shall be composed of a sensor and a mechanical linkage powered by ram air from the bomb slip stream. To insure a safe release, the unit shall determine that the bomb is at a velocity of 200 feet per second or greater and is in a free-fall condition for at least two seconds during the first four seconds after lanyard initiation. If these conditions are met, the mechanical linkage shall remove an explosive train interrupter. The FFFS shall be packaged for installation in the nose fuze well of a general purpose bomb. The FFFS shall be activated by an internal lanyard on release from the aircraft.

DESIGN REQUIREMENTS

The FFFS shall be compatible with both high and low drag bombs, cluster bombs, and all normal delivery tactics such as level, dive, and toss associated with these weapons. It shall impose no flight restrictions on the normal flight envelope and speed range of all aircraft from the A-1E through F-15.

The FFFS shall be capable of performing its function after 10 years of storage.

The FFFS shall operate over the temperature range of -65° to +160° F. It shall be capable of carriage up to Mach 2.5 at up to 60,000 feet (maximum of Mach 1.5 at sea level). It shall be capable of functioning at altitudes of 60,000 feet.

The FFFS shall not provide an enable-to-arm signal when a bomb is released during safe jettison where the fuze has not been initiated. (Reference MIL-STD-331, Test 205).

The FFFS shall not provide an enable-to-arm signal when a bomb is accidentally released during take-off or landing and the fuze is not initiated on release (Reference MIL-STD-331, Test 206).

Instrumentation shall be developed to be used during flight testing to establish the four-second time interval beginning at bomb release and to record the output of the fluidic velocity and free-fall sensor. An instrumentation unit shall be packaged with each of the FFFS's for installation in the nose fuze well of a general purpose bomb. The FFFS and instrumentation package shall be activated by an internal lanyard on release from the aircraft.

FABRICATION REQUIREMENTS

Upon Government sponsor approval of the design, one prototype sensor shall be fabricated. It shall be tested to demonstrate the capability of the FFFS to function as specified in the design requirements above. The test results shall be

analyzed and design changes shall be made to correct any deficiencies discovered. These design changes shall be submitted for Government sponsor review and approval.

Upon Government sponsor approval of the modified design, two FFFS's, with suitable wiring for Government furnished telemetering equipment, shall be fabricated and delivered with bomb mounting hardware for Air Force captive flight testing and evaluation in general purpose bombs.

After completion of the captive flight test, the two FFFS's shall be reassembled with suitable instrumentation, lanyard assembly, and bomb mounting hardware for Air Force drop testing and evaluation in general purpose bombs.

FUNCTIONAL SEQUENCE REQUIREMENTS

The FFFS is required to prevent fuze arming (actuation of the mechanical linkage which removes the explosive train interrupter) while the bomb is attached to the aircraft and the lanyard has been pulled. The FFFS is required to arm the fuze within four seconds after the lanyard has been pulled and after two seconds of free flight.

SECTION III

DESIGN

GENERAL

The fluidic free-flight sensor (FFFS) is a fluidic system designed to distinguish between the environment a bomb experiences while stowed aboard an aircraft (in captive flight) and that experienced after release from the aircraft (in free flight). The most significant environment which is present while the bomb is in captive flight (not present while the bomb is in free flight) is an acceleration perpendicular to the axis of the bomb. This acceleration becomes very small when the aircraft is in a steep climb or dive. Therefore, the FFFS must be capable of distinguishing very small accelerations.

Bomb fins are designed to give the projectile a small amount of roll and this environment is in the form of a centrifugal acceleration which is perpendicular to the axis of the bomb. The FFFS must be designed so centrifugal acceleration causes the same output signal as zero acceleration.

Based on this knowledge, a fluidic accelerometer was selected which will put out a signal only when it senses a centrifugal acceleration (acceleration along the accelerometer axis and in a direction toward the bomb center line) or zero acceleration along the accelerometer axis. This accelerometer is shown in Figure 2, illustrating the free-flight attitude with an output signal and the captive flight attitude with no output signal.

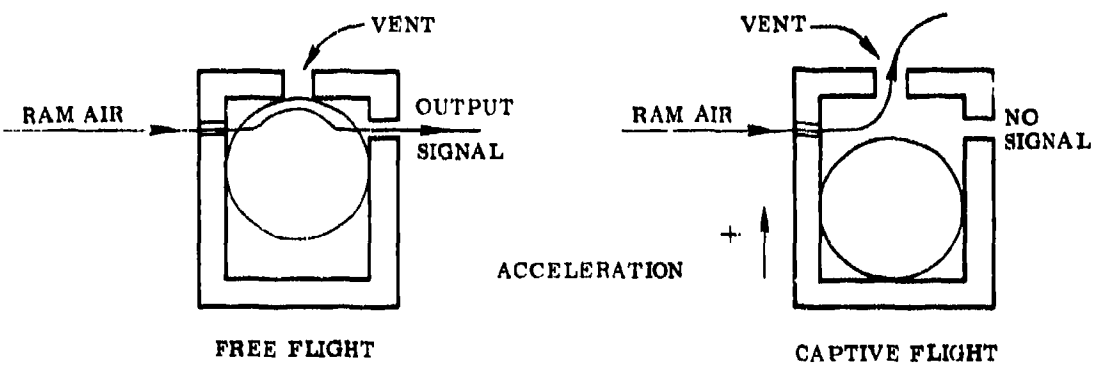

LOGIC TABLE

ACCELERATION	+	-	0
OUTPUT SIGNAL	NO	YES	YES

Figure 2. Fluidic Accelerometer

The sensor is composed of three fluidic accelerometers arranged in a circular pattern around the bomb center line so that either the environment of a spinning bomb or a bomb in free flight with no acceleration perpendicular to the bomb center line will cause an output signal from all three accelerometers (Figure 3).

The sensitivity of the fluidic accelerometer to acceleration is a function of supply air pressure. Therefore, a pressure regulator is provided as part of the FFFS. The mechanical linkage is provided to perform the arming function when the sensor senses a free-flight environment. The linkage is driven by air metered through an orifice from the three accelerometers. The actuation time of the mechanical linkage (arming time) is a function of accelerometer output signal pressure. This also requires a constant air pressure supply for accurate arming time. A block diagram of the FFFS is shown in Figure 4.

The FFFS is provided with dust covers over the ram air intake in the nose of the housing and the air vent in the ogive which are removed prior to take-off. Internal valves are provided to block the flow of air into and from the FFFS during captive flight. A lanyard system is used to open these valves and start the recorder when the bomb is ejected from the aircraft. The recorder contains three solenoid actuated tracers which will register on the recorder chart the time from ejection until operating pressure (0.33 pound per square inch gage) in the pressure regulator is reached, all three accelerometers sense free flight, and the mechanical linkage has completed its function.

DETAIL DESIGN

The major components which make up the FFFS are the ram air intake and vent system, air filter, pressure regulator, sensor, mechanical linkage, and system function monitoring and recording system. The following is a description of the design of each of these components:

AIR INTAKE AND VENT SYSTEM

The air intake and vent system as the bomb is stowed aboard the aircraft is shown in Figure 5. The nozzle seal and vent seal are removed prior to take-off. With the seals removed during flight, ram air enters the ram air intake passage and exits through the vent plug. Providing a circulation of air in this manner during flight will prevent the intake from filling with water and becoming plugged with ice.

When the bomb is dropped, the lanyard pulls the vent plug release shaft and allows the vent plug to be ejected by spring force. When the vent plug is ejected, the nozzle plug seats against the retainer and closes the opening between the air intake passage and the vent, forcing air at ram pressure into the air filter entrance.

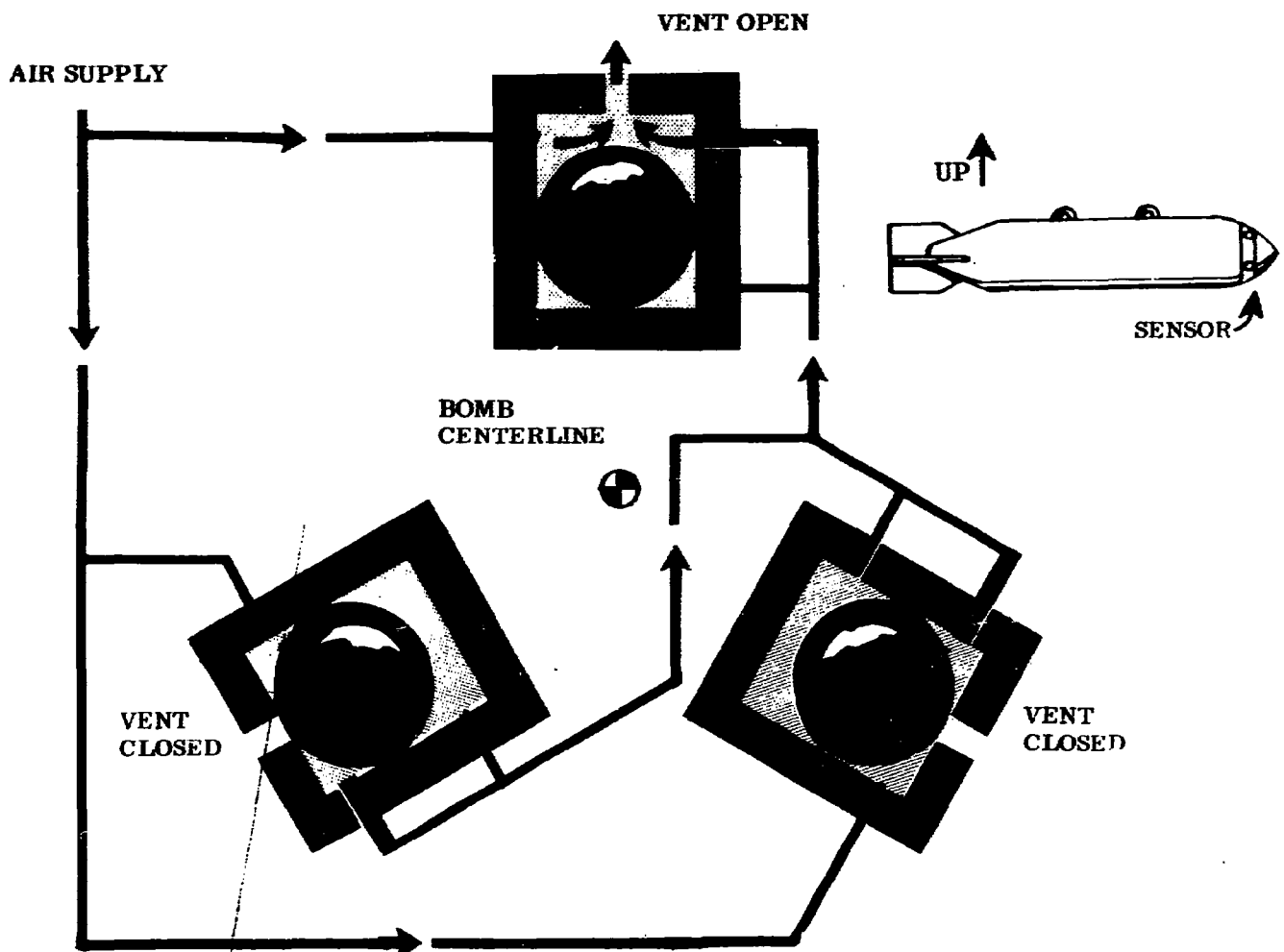

Figure 3. Schematic Diagram of Fluidic Free-Flight Sensor

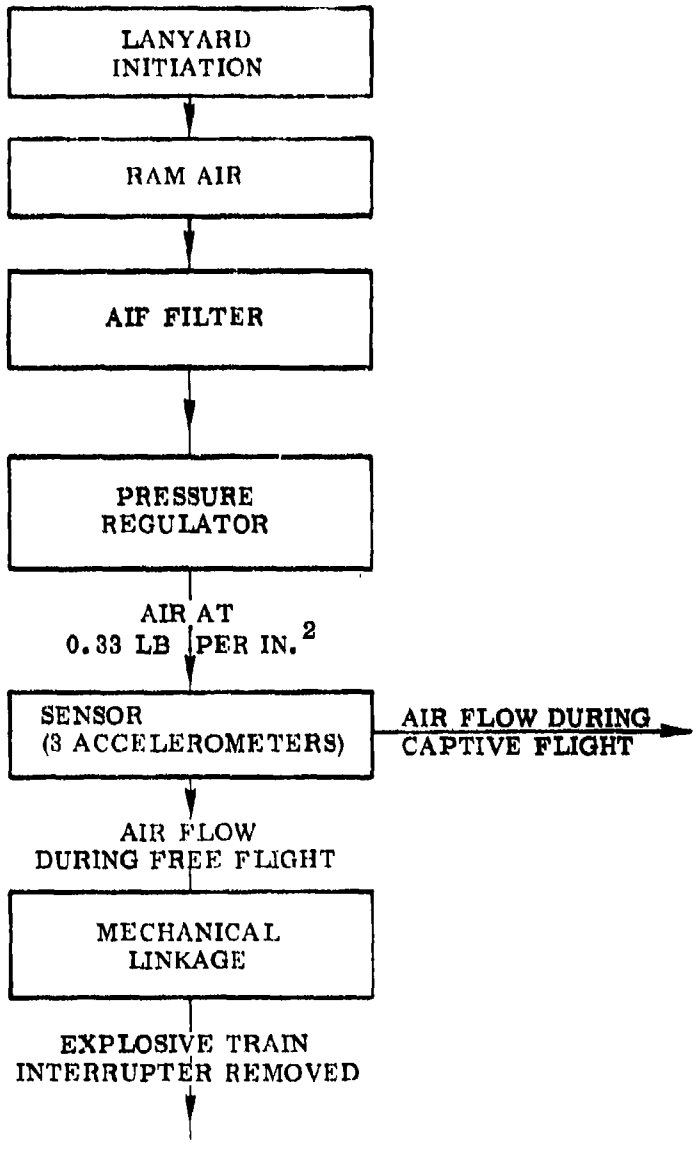

Figure 4. Fluidic Free-Flight Sensor Block Diagram

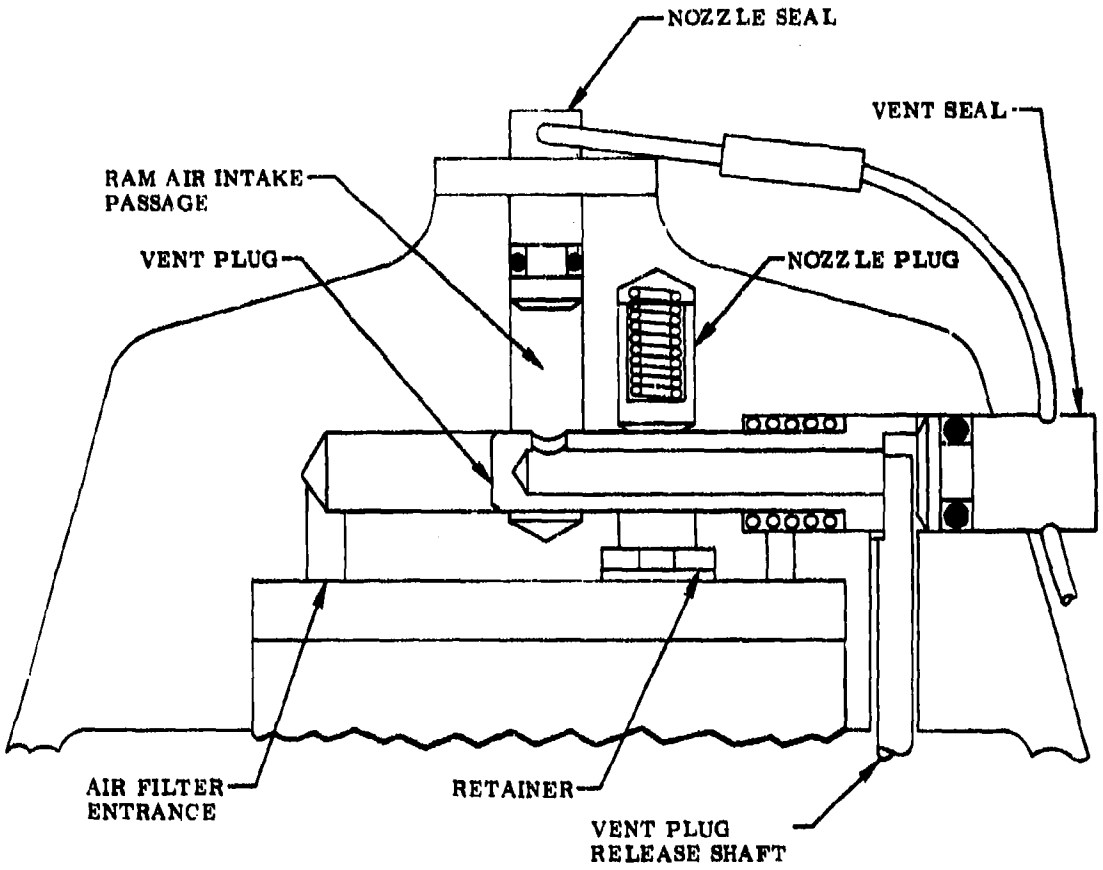

Figure 5. Air Intake and Vent System

AIR FILTER AND PRESSURE REGULATOR

The air filter and pressure regulator (Figure 6) provide clean air at ram air pressure (minus small losses) at velocities up to 200 feet per second indicated air speed and 0.33 pound per square inch at velocities above 200 feet per second indicated air speed. The filter selected is a strip of coarse grade chemical precipitation filter paper attached to a copper mesh screen to provide rigidity. Since the FFFS is required to function for only four seconds, a water separator was not considered necessary as the filter with 1.3 square inch surface area will remove all the water collected during four seconds of operation.

The pressure regulator is a diaphragm actuated valve designed for the flow and pressure requirement of the FFFS. The diaphragm with regulated pressure (P_R) on one side and ambient pressure (P_A) on the other opens and closes the valve to maintain a constant pressure differential equivalent to the spring force. The spring is calibrated to maintain a pressure differential of $P_R - P_A = 0.33$ pound per square inch. The valve stem guide diameter was critical for maintaining

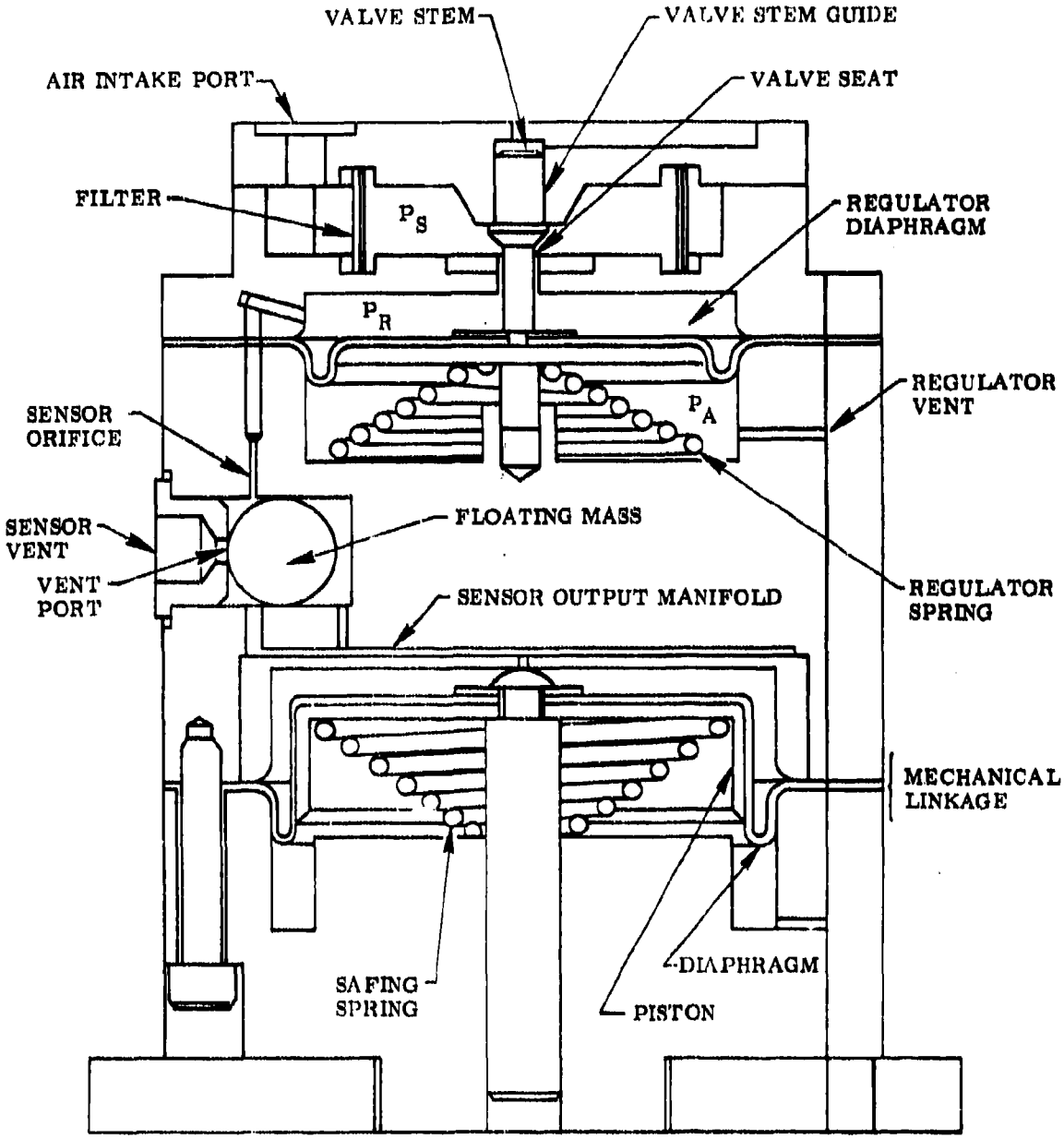

Figure 6. Fluidic Free-Flight Sensor Section View

a constant P_R with wide variation in supply pressure (P_S). If the diameter were too large, P_R increased as P_S increased, and if the diameter were too small, P_R decreased as P_S increased.

SENSOR

One of the three accelerometers which make up the sensor portion of the FFFS is shown in Figure 6. Air from the pressure regulator enters each accelerometer via a sensor orifice. This orifice is located so that air jet from the orifice is tangent to the surface of the ball when it is farthest from the sensor vent. The size of the orifice was dictated by the sensor sensitivity which was identified as a 6-degree lock-in angle (see Section IV on Sensitivity Testing). Lock-in angle is the angle between the FFFS center line and vertical acceleration line during bench test with full air power causing the pressure to rise in the sensor output manifold indicating a free-flight attitude. When the acceleration of the floating mass becomes less than that represented by the 6-degree lock-in angle, the air jet from the sensor orifice causes the floating mass to move to the vent port and close it causing pressure to rise in the sensor output manifold.

The two FFFS's delivered to the Air Force were identical except for the design of the accelerometers which make up the sensor component. One FFFS used a 0.375-inch-diameter spherical floating mass and the other FFFS used a 0.250-inch-diameter spherical floating mass. The diameter of the cylindrical cavities containing the floating masses was the only other dimensional difference between the two FFFS's.

When the FFFS experiences a free-flight environment, all sensor vent ports will become blocked and pressure in the sensor output manifold will rise and approach regulator output pressure P_R. This pressure enters the chamber containing the mechanical linkage diaphragm causing the piston to move, compressing the safing spring. The rate of movement of the piston is controlled by the three sensor orifices. The size of the piston, the safing spring force, and length of travel are selected to give a time of two seconds from the time free flight is sensed until piston travel is completed. Since the vent ports are rather large relative to the size of the sensor orifices, the piston will return to the safe position very quickly if the free-flight environment is lost. If the lanyard is pulled while the bomb is still hanging on the aircraft, the system could not become armed unless the flight maneuver were such that the system sensed free-flight continuously for a period of time equal to the arming time. If the system sensed free-flight for a period of time less than the arming time the system will return immediately to its safe condition.

MECHANICAL LINKAGE

The mechanical linkage (Figure 6) which will be used to remove the explosive train interrupter is a spring loaded piston-diaphragm assembly. The safing spring is designed to prevent actuation at pressure below 0.33 pound per square inch (200 feet per second drop velocity). The safing spring also will return the safing and arming mechanism to the original safe position if the arming signal is lost during the arming sequence. The diaphragm is responsive to extremely small pressure changes, has no mechanical spring gradient, no break-out friction effects, possesses very low hysteresis qualities, and has a long flex life.

RECORDER

A recorder (Figure 7) is attached to the FFFS to monitor regulator output pressure, sensor output signal, and mechanical linkage function. The recorder was not developed as part of this contract, but was taken from another program.

The recorder contains three solenoids with spring loaded styluses which make a trace on the pressure sensitive recorder paper when the solenoid is not energized. A typical FFFS performance is recorded on the recorder paper shown in Figure 7. When the lanyard is pulled at bomb release, the recorder paper starts to move, producing four traces on the paper. The trace at the bottom of the recorder paper is a continuous trace indicating how far the paper has moved.

The trace with a length of t_1 is formed by the stylus monitoring the regulator pressure. When the proper regulator pressure is reached, the regulator pressure switch will close and the solenoid will lift the stylus, discontinue the trace and by the length of the trace, record the time required after the release for the regulator to reach operating pressure.

The trace with a length of t_2 monitors the sensor output pressure and the length of the trace records the time after the lanyard pull at which the sensor indicates a free-flight environment.

The trace with a length of t_3 monitors the movement of the mechanical linkage. When the movement of the mechanical linkage has been completed, it closes a microswitch which causes the solenoid to raise and discontinue the trace, indicating the time after lanyard pull at which the arming function was completed. The recorder paper has a running time of approximately seven seconds at a rate of 0.67-inch per second.

Figure 8 is a wiring diagram for the recorder. Transducers No. 1 and No. 2 are the regulator switch and sensor pressure switch, respectively, which actuate solenoids #1 and #2 to record times t_1 and t_2 as shown on Figure 7. The 2N4403 transistors Q1 and Q2 were required as the pressure switches did not have enough capacity to carry the solenoid current. The timer microswitch closes when the mechanical linkage completes its arming function and actuates solenoid #3 recording time t_3, as shown in Figure 7. The recorder has one fixed scribe which records a continuous line on the recorder paper to indicate that the drum did rotate the proper amount.

The recorder electrical circuit was provided with two leads to the battery charger terminals as shown in Figure 8.

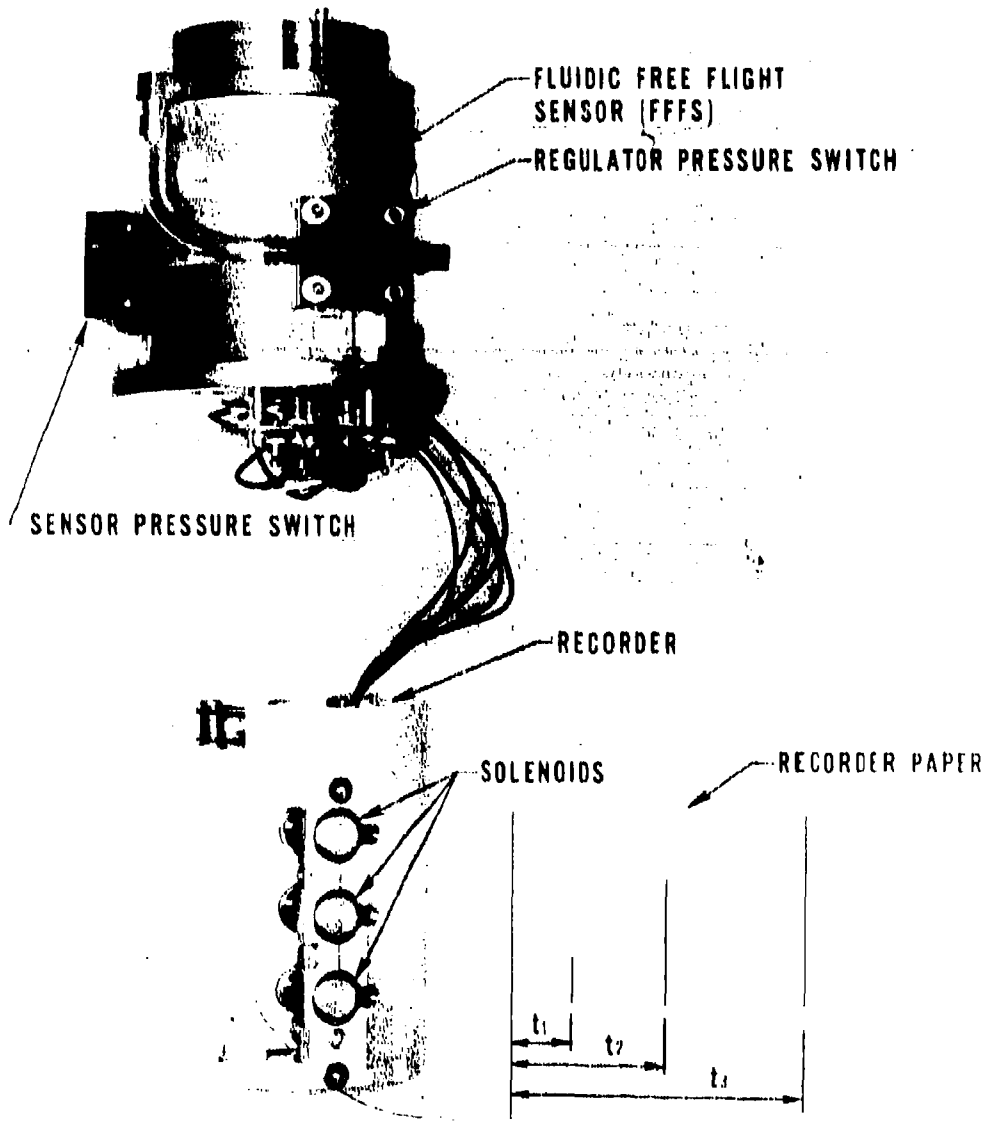

Figure 7. Fluidic Free-Flight Sensor Recorder with Record Sample

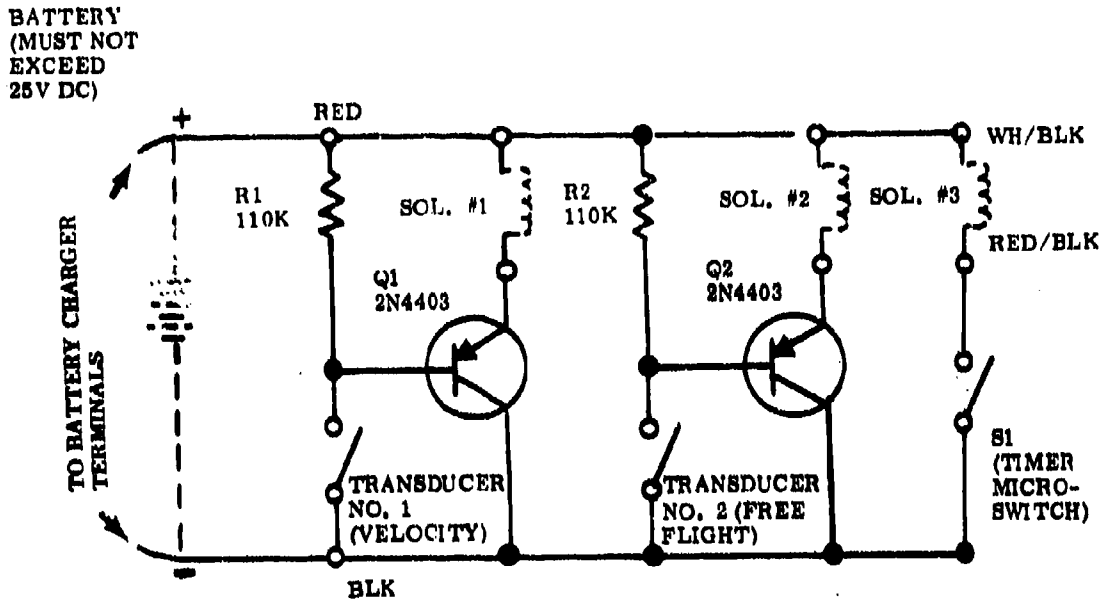

1. BATTERY & SOLENOIDS SUPPLIED IN DROP TEST UNITS ONLY

2. MAX CURRENT THRU 2N4403 NOT TO EXCEED 225 MA.

Figure 8. Fluidic Free-Flight Sensor Recorder Wiring Diagram

SECTION IV

CONTRACTOR TESTING

TEST SUMMARY

One prototype of the FFFS was fabricated and tested in the laboratory to determine feasibility before fabricating test units for bomb drop tests. The following tests were conducted:

1. Pressure Regulator Accuracy
2. Free-Flight Sensitivity, Hysteresis, and Fluidic Timer Accuracy
3. Vibration Sensitivity
4. Forced Ejection Compatibility
5. High Altitude Operation
6. High Drag Compatibility
7. Nozzle and Nose Cone Vent Efficiency

Captive flight tests and bomb drop test results will be reported in a future ADTC technical report.

PRESSURE REGULATOR ACCURACY TEST

The performance of the FFFS in a near-zero-g environment, and the accuracy of the fluidic timer are both directly dependent upon the accuracy of the pressure regulator. Consequently, the accuracy of the regulator must be determined before the overall system performance and accuracy can be predicted. The purpose of this test is to determine this accuracy.

The accuracy of the regulator is a measure of its ability to regulate the desired pressure level regardless of the supply or ram air pressure available. For supply pressures below the desired regulating level, the accuracy is measured with respect to the actual supply pressure. For supply pressures equal to or above the desired level, the accuracy is measured with respect to the desired level. The two equations describing the accuracy in these supply pressure zones are:

Pressure Zone 1 $0 < P_{S1} < P_{RO}$ Accuracy $= P_R/P_{S1}$

Pressure Zone 2 $P_{S1} \geq P_{RO}$ Accuracy $= 1 - \frac{(P_{RO} - P_R)}{P_{RO}}$

P_{S1} - actual supply pressure, PSIG

P_R - actual regulated pressure, PSIG

P_{RO} - desired regulated pressure, PSIG

Supply air was provided at the air intake port of the FFFS and pressure taps were made in the regulator at the following three points:

1. P_{S1} - supply chamber upstream of the filter.
2. P_{S2} - supply chamber downstream of the filter.
3. P_R - regulating chamber pressure.

An air line was installed between one of the sensor ports and a meter to measure mass flow as a function of the varying supply pressure P_{S2}.

Table I is a tabulation of the results of the tests and a curve of regulator pressure versus supply pressure is shown in Figure 9.

TABLE I. PRESSURE REGULATOR ACCURACY TEST RESULTS

Pressure Zone	Supply Pressure		Regulating Pressure (P_R)			Mass Flow[4]		Accuracy (Percent)[5]			Timer[6] Pressure
	P_{S1}	P_{S2}	Flow 1[1]	Flow 2[2]	Flow 3[3]	Flow 1[1]	Flow 2[2]	Flow 1	Flow 2	Flow 3	
1	0.20	0.195	0.195	0.195	0.195	0.015	0.022	97.5	97.5	97.5	0.180
↓	0.25	0.245	0.245	0.245	0.245	0.018	0.025	98.0	98.0	98.0	0.230
↓	0.30	0.297	0.295	0.295	0.295	0.018	0.027	98.3	98.3	98.3	0.275
2	0.50	0.497	0.327	0.320	0.333	0.015	0.030	99.1	96.7	99.1	0.300
↓	1.00	0.997	0.330	0.330	0.345	0.015	0.030	100.0	100.0	95.5	0.300
↓	2.00	1.997	0.330	0.331	0.343	0.017	0.030	100.0	99.7	96.1	0.300
↓	3.00	2.997	0.327	0.330	0.343	0.017	0.030	99.1	100.0	96.1	0.300
↓	4.00	3.997	0.330	0.330	0.340	0.017	0.030	100.0	100.0	96.9	0.300
↓	5.00	4.997	0.327	0.327	0.340	0.017	0.030	99.1	99.1	96.9	0.300
↓	6.00	5.997	0.325	0.327	0.335	0.017	0.030	98.5	99.1	98.5	0.300
↓	7.00	6.997	0.322	0.325	0.330	0.017	0.030	97.6	98.5	100.0	0.300
↓	8.00	7.997	0.323	0.333	0.330	0.017	0.030	97.6	99.1	100.0	0.300
↓	9.00	8.997	0.325	0.332	0.330	0.017	0.030	98.5	99.4	100.0	0.300
↓	10.00	9.997	0.320	0.321	0.335	0.017	0.030	96.7	97.3	98.5	0.300

Notes:

1 Flow Condition 1 - Two Vent Ports Open
2 Flow Condition 2 - One Vent Port Open
3 Flow Condition 3 - Vent Ports Closed, Timer Operating
4 Mass Flow - One Open Vent Port Monitored (SCFM)
5 Desired Regulating Pressure - $P_{RO} = 0.33$ psig

6 Timer Pressure - Flow Condition 3 only, Psig
7 Atmospheric Conditions:

$P_a = 31.12$ in. Hg. $T_a = 75°$ F.

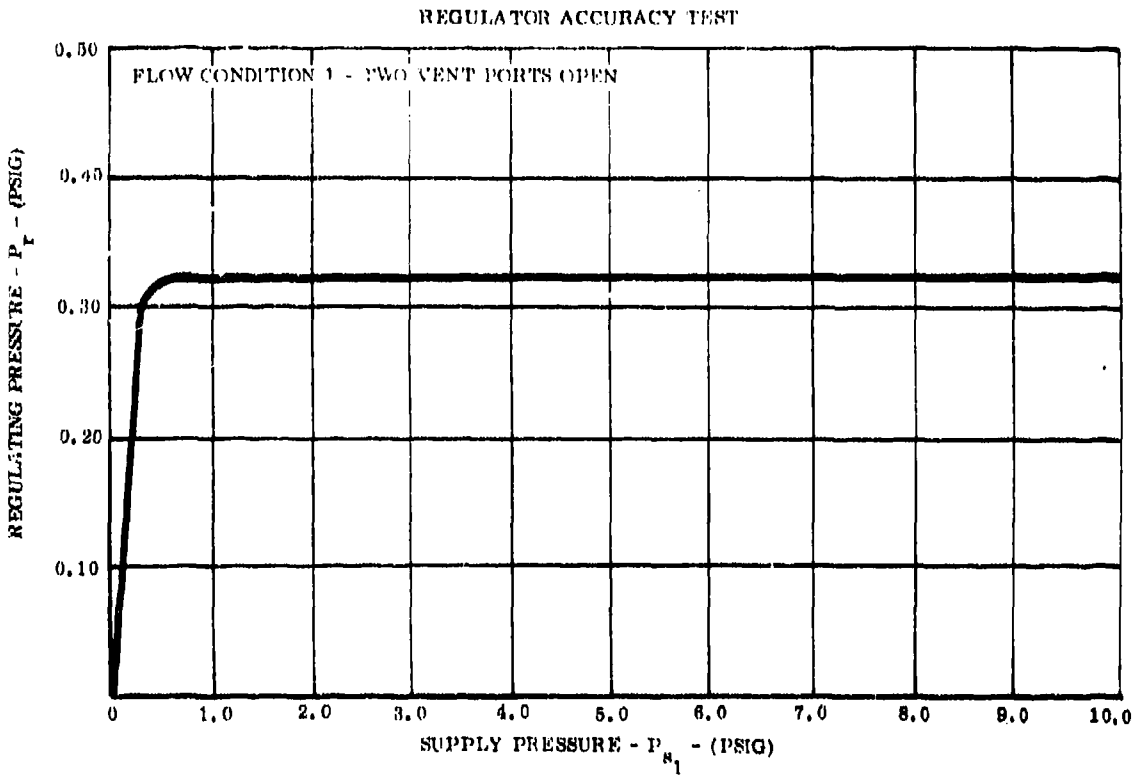

Figure 9. Curve of Regulator Pressure Versus Supply Pressure

FREE-FLIGHT SENSITIVITY, HYSTERESIS, AND TIMER ACCURACY TEST

GENERAL

The fluidic free-flight sensor is required to sense that a weapon has been released from the aircraft and is in a near-zero-g free-flight environment for a given period of time. In order to predict the sensor conformance with this requirement, a simulated free-flight test is required.

The aerodynamic and mechanical drag forces acting along the longitudinal axis of the weapon limits the sensor to monitoring the free-flight environment in the plane perpendicular to this axis. Consequently, the sensor is susceptible to erroneous free-flight signals during some captive flight maneuvers. The design consideration has been to minimize this susceptibility while also allowing proper operation in an actual free-flight environment.

This test was designed to measure the cone half-angle in which the sensor mass was susceptible to an erroneous free-flight signal. Measurements were also made of the hysteresis of the system, as well as the accuracy of the fluidic timer.

TEST PROCEDURE

The free-flight sensor module containing the regulator, filter, sensor subassembly, and timer was connected to a regulated air supply. Pressure taps were made in the regulator in the supply chamber, P_{S1}, and in the regulating chamber, P_R. These taps were connected to manometers. Pressure tap P_{S1} was used to accurately control the supply pressure. Pressure tap P_R served two purposes. First, it indicated when all three masses had sensed the simulated free-flight environment. Secondly, it indicated when the fluidic timer had timed out. This was accomplished by noting changes in pressure P_R associated with sudden changes in the mass flow through the system caused by the above events.

The angle at which all three masses first sensed a simulated free-flight environment was identified as the "lock-in" angle. This lock-in angle was also the half-angle of a cone which describes the sensor orientation susceptible to erroneous signals. The angle at which at least one mass sensed a loss of the free-flight environment was identified as the "lock-out" angle. The difference between the lock-in and the lock-out angles is a measure of the hysteresis of the system. The angles were determined by placing the sensor module on a tilt table graduated to measure orientation with respect to vertical. With the supply air on and the sensor in a non-free-flight condition, the table was then tilted until lock-in occurred. The table was then tilted to vertical and maintained there until the timer completed its function. The process was reversed to locate the lock-out angle. This process was repeated ten times to determine repeatability. The entire test was then repeated at three different supply pressures with the 3/8-inch-diameter spherical mass (Table II) and at one pressure (5 psig) with the 1/4-inch-diameter spherical mass (Table III).

TABLE II. FREE-FLIGHT SENSITIVITY, HYSTERESIS, AND RC TIMER ACCURACY TEST RESULTS (3/8-INCH-DIAMETER SPHERICAL MASSES)

P_{S1} (Psig)	Lock-in Angle (degrees)	RC Time (seconds)	Lock-out Angle (degrees)	Hysteresis (degrees)	Timer Accuracy (percent)
0.33	6.0	2.0	10.5	4.5	100
0.33	6.0	2.0	10.5	4.5	100
0.33	5.5	2.0	11.0	5.5	100
0.33	6.0	2.0	10.5	4.5	100
0.33	5.5	2.0	11.0	5.5	100
0.33	5.5	2.0	10.5	5.0	100
0.33	5.5	2.0	10.5	5.0	100
0.33	5.5	2.0	10.5	5.0	100
0.33	6.0	2.0	10.5	4.5	100
0.33	6.0	2.0	10.5	4.5	100
5.00	6.5	2.0	12.0	5.5	100
5.00	6.0	2.0	12.0	6.0	100
5.00	5.5	2.0	12.0	6.5	100
5.00	6.0	2.0	11.5	5.5	100
5.00	6.0	2.0	11.5	5.5	100
5.00	6.0	2.0	11.5	5.5	100
5.00	5.5	2.0	11.0	5.5	100
5.00	6.5	2.0	12.0	5.5	100
5.00	6.0	2.0	11.5	5.5	100
5.00	6.5	2.0	11.5	5.0	100
10.00	6.0	2.0	11.0	5.0	100
10.00	5.5	2.0	11.0	5.5	100
10.00	6.0	2.0	11.0	5.0	100
10.00	6.0	2.0	11.0	5.0	100
10.00	6.0	2.0	11.0	5.0	100
10.00	6.0	2.0	11.0	5.0	100
10.00	6.0	2.0	11.0	5.0	100
10.00	6.0	2.0	11.0	5.0	100
10.00	6.0	2.0	11.0	5.0	100
10.00	6.0	2.0	11.0	5.0	100

TABLE III. FREE-FLIGHT SENSITIVITY, HYSTERESIS, AND RC TIMER ACCURACY TEST RESULTS (1/4-INCH-DIAMETER SPHERICAL MASSES)

P_{S1} (Psig)	Lock-in Angle (degrees)	RC Time (seconds)	Lock-out Angle (degrees)	Hysteresis (degrees)	Timer Accuracy (percent)
5.0	13	2.0[1]	31	18	100
5.0	12	2.0	30	18	100
5.0	12	2.0	30	18	100
5.0	11	2.0	31	20	100
5.0	12	2.0	31	19	100
5.0	12	2.0	30	18	100
5.0	13	2.0	30	17	100
5.0	12	2.0	31	19	100
5.0	12	2.0	30	18	100
5.0	12	2.0	30	18	100

Note: 1. Timer piston stroke adjusted prior to test to obtain desired time. Stroke adjustment required because of the increase in spring force to prevent arming below 200 feet per second.

VIBRATION SENSITIVITY TEST

GENERAL

The fluidic free-flight sensor is required to be compatible with both general purpose and dispenser bombs throughout their normal operating envelopes. Consequently, the sensor must be capable of operating properly in a mild vibration environment experienced by the weapon during its free-flight condition.

The purpose of this test is to determine the operating limits of the sensor under various vibration environments in an effort to predict the sensor's performance in the weapon. However, since the actual weapon's vibration environment has not been determined, the conclusions from this test are only assumptions.

TEST PROCEDURE

The free-flight sensor module containing the regulator, filter, sensor subassembly, and timer was mounted vertically on a vibration table. The vibration table was turned on, adjusted, and stabilized before the supply air was allowed to enter the regulator. After a simulated free-flight signal was received, the vibration was increased until the signal was lost. This procedure was repeated to obtain data in a variety of vibration environments (Tables IV through VII).

TABLE IV. VIBRATION SENSITIVITY TEST RESULTS
(3/8-INCH-DIAMETER SPHERICAL MASS)

Discrete G-Levels, Varying Frequency

Sensor Orientation	G-Level (G's)	Frequency (Cps)	Direction of Vibration	Remarks
Vertical	0.5	5-2000	Vertical	Remained in free flight
Vertical	2.5	5-530 (Fast Sweep)	Vertical	Switched out of free flight
Vertical	2.5	5-600 (Slow Sweep)	Vertical	Remained in free flight
Vertical	2.5	5-600 (Normal Sweep)	Vertical	Remained in free flight
Vertical	5.0	5-435	Vertical	Switched out of free flight
Horizontal[1]	2.5	5-2000	Vertical	Remained out of free flight
Horizontal[1]	10.0	5-2000	Vertical	Remained out of free flight
Vertical[1]	0.5	100-21 (Decr. frequency)	Horizontal	Switched out of free flight
Vertical[1]	1.0	1000-81	Horizontal	Switched out of free flight
Vertical[1]	2.0	1000-600	Horizontal	Switched out of free flight
Vertical[1]	3.0	1000-600	Horizontal	Switched out of free flight
Vertical[1]	5.0	1000-600	Horizontal	Switched out of free flight
Vertical[1]	5.0	250-650 (Incr. frequency)	Horizontal	Initially out of free flight, in at 320, out at 390, in at 500, out at 510, in at 650

Note: 1. One pill box in-line with direction of vibration

TABLE V. VIBRATION SENSITIVITY TEST RESULTS
(3/8-INCH-DIAMETER SPHERICAL MASS)

Discrete Frequency, Varying G-Levels

Sensor Orientation	G-Level (G's)	Frequency (Cps)	Direction of Vibration	Remarks
Vertical	0.5-10	250	Vertical	Remained in free flight
Vertical	0.5-5.0	500	Vertical	Switched out of free flight
Vertical	0.5-5.7	1000	Vertical	Switched out of free flight
Vertical	0.5-10	2000	Vertical	Remained in free flight
Horizontal	0.5-10	250	Vertical	Remained out of free flight
Horizontal	0.5-10	500	Vertical	Remained out of free flight
Horizontal	0.5-10	1000	Vertical	Remained out of free flight
Horizontal	0.5-10	2000	Vertical	Remained out of free flight
Vertical	0.12-0.37	5	Horizontal	Switched out of free flight
Vertical	0.12-0.48	10	Horizontal	Switched out of free flight
Vertical	0.12-0.50	20	Horizontal	Switched out of free flight
Vertical	0.12-0.72	50	Horizontal	Switched out of free flight
Vertical	0.12-1.0	100	Horizontal	Switched out of free flight
Vertical	0.12-2.6	250	Horizontal	Switched out of free flight
Vertical	0.12-2.8	500	Horizontal	Switched out of free flight
Vertical	0.12-7.8	1000	Horizontal	Switched out of free flight

TABLE VI. VIBRATION SENSITIVITY TEST RESULTS
(1/4-INCH-DIAMETER SPHERICAL MASS)

Discrete G-Levels, Varying Frequency

Sensor Orientation	G-level (G's)	Frequency (Cps)	Direction of Vibration	Remarks
Vertical[1]	0.5	100-5 (Decr. frequency)	Horizontal	Remained in free flight down to minimum frequency of vibration table
Vertical	1.0	100-260[2]	Horizontal	Switched out of free flight
		260-165		Switched back into free flight
		165-55[3]		Switched and remained out of free flight
Vertical	2.0	1000-300	Horizontal	Switched out of free flight
Vertical	3.0	1000-390	Horizontal	Switched out of free flight
Vertical	5.0	1000-580	Horizontal	Switched out of free flight
Vertical	5.0 (repeated)	1000-960	Horizontal	Switched out of free flight
		960-910		Switched back into free flight
		910-600		Switched and remained out of free flight
Vertical	5.0	250-1000 (Incr. frequency)		Initially out of free flight, in at 750, out at 970, in at 1000.

Notes:
1. One pill box in-line with direction of vibration
2. Result of "tuned timer"
3. Result of increased air jet strength

TABLE VII. VIBRATION SENSITIVITY TEST RESULTS
(1/4-INCH-DIAMETER SPHERICAL MASS)

Discrete Frequency, Varying G-Levels

Sensor Orientation	G-level (G's)	Frequency (Cps)	Direction of Vibration	Remarks
Vertical	0.10-0.70	5	Horizontal	Remained in free flight up to maximum g-level of vibration table at 5 cps
Vertical	0.10-1.1	10	Horizontal	Switched out of free flight
Vertical	0.10-1.1	10 (Repeated)	Horizontal	Switched out of free flight
Vertical	0.10-0.98	20	Horizontal	Switched out of free flight
Vertical	0.10-0.92	20 (Repeated)	Horizontal	Switched out of free flight
Vertical	0.10-1.0	50	Horizontal	Switched out of free flight
Vertical	0.70-1.0	50 (Repeated)	Horizontal	Switched out of free flight
Vertical	0.12-1.4	100	Horizontal	Switched out of free flight
Vertical	0.80-1.1	100 (Repeated)	Horizontal	Switched out of free flight
Vertical	0.60-1.1	100 (Repeated)	Horizontal	Switched out of free flight
Vertical	0.10-1.35	250	Horizontal	Switched out of free flight
Vertical	0.10-4.0	500	Horizontal	Switched out of free flight
Vertical	0.10-6.0	1000	Horizontal	Switched out of free flight

FORCED EJECTION COMPATIBILITY TEST

GENERAL

The fluidic free-flight sensor is required to operate in weapons which have been forcefully ejected from the aircraft pylon. Therefore, the acceleration associated with the ejection must not induce oscillations in the spherical masses which do not dampen out rapidly enough to allow proper sensor function. The purpose of this test is to verify that the free-flight sensor will operate within the allowable time limits when subjected to a simulated forced ejection environment.

TEST PROCEDURE

The free-flight sensor module containing the regulator, filter, sensor subassembly, and timer was suspended on a pendulum. The axis of the module was oriented in line with the pendulum arm. A solid plate was positioned such that the module would strike it when the pendulum arm was in the vertical position. The plate was lined with rubber energy absorbing pads to produce a deceleration impulse simulating the actual ejection. The release angle of the pendulum was also adjusted to provide a deceleration amplitude simulating the actual environment. The plate also contained a feature for catching the module on first impact to preclude rebounding.

The test was conducted by positioning the module at the prescribed angle and then turning on the air supply. The orientation of the module was such that the sensor was not in a simulated free-flight condition. The module was then released and allowed to strike the plate. The time from impact to completion of timer operation was recorded. The test was repeated ten times to obtain repeatability data (Table VIII).

TABLE VIII. FORCED EJECTION COMPATIBILITY TEST RESULTS

Impact		
Amplitude (G's)	Duration (milliseconds)	Time[1] (seconds)
15	3	3.25
15	3	2.80
15	3	2.90
15	3	3.00
15	3	2.95
20	3	2.90
20	3	2.80
20	3	3.00
20	3	3.10
20	3	2.95

Notes: 1. Time from initial impact to timer completion.
2. Sensor tested at Flow Condition 2 (one vent port open initially).

FORCED EJECTION COMPATIBILITY TEST

GENERAL

The fluidic free-flight sensor is required to operate in weapons which have been forcefully ejected from the aircraft pylon. Therefore, the acceleration associated with the ejection must not induce oscillations in the spherical masses which do not dampen out rapidly enough to allow proper sensor function. The purpose of this test is to verify that the free-flight sensor will operate within the allowable time limits when subjected to a simulated forced ejection environment.

TEST PROCEDURE

The free-flight sensor module containing the regulator, filter, sensor subassembly, and timer was suspended on a pendulum. The axis of the module was oriented in line with the pendulum arm. A solid plate was positioned such that the module would strike it when the pendulum arm was in the vertical position. The plate was lined with rubber energy absorbing pads to produce a deceleration impulse simulating the actual ejection. The release angle of the pendulum was also adjusted to provide a deceleration amplitude simulating the actual environment. The plate also contained a feature for catching the module on first impact to preclude rebounding.

The test was conducted by positioning the module at the prescribed angle and then turning on the air supply. The orientation of the module was such that the sensor was not in a simulated free-flight condition. The module was then released and allowed to strike the plate. The time from impact to completion of timer operation was recorded. The test was repeated ten times to obtain repeatability data (Table VIII).

TABLE VIII. FORCED EJECTION COMPATIBILITY TEST RESULTS

Impact Amplitude (G's)	Impact Duration (milliseconds)	Time[1] (seconds)
15	3	3.25
15	3	2.80
15	3	2.90
15	3	3.00
15	3	2.95
20	3	2.90
20	3	2.80
20	3	3.00
20	3	3.10
20	3	2.95

Notes: 1. Time from initial impact to timer completion.
2. Sensor tested in "flow condition 2" (one vent port open initially).

Best Available Copy

HIGH ALTITUDE OPERATION TEST

GENERAL

The fluidic free-flight sensor is required to operate properly when the weapon has been released at altitudes up to 60,000 feet above sea level. At this altitude, the atmosphere approaches a vacuum with the static pressure and density only approximately 1/14 and 1/10 of sea level, respectively. Consequently, at the minimum release speed of 200 feet per second indicated air speed, the mass flow through the system is somewhat less and the pressure losses somewhat greater than at ambient. A simulated high altitude test is therefore necessary to verify sensor conformance with this requirement.

TEST PROCEDURE

The free-flight sensor module containing the regulator, filter, sensor subassembly, and timer was placed in a vacuum chamber which had been mounted on the tilt table used in the free-flight sensitivity hysteresis and RC timer accuracy test as shown in Figure 10. The high altitude was simulated by evacuating the chamber to 1.04 pounds per square inch. Ambient air was allowed to bleed through a valve and into the regulator at 0.33-pound per square inch, establishing the desired flow. The module was then tested using the procedures described in the free-flight test (Table IX).

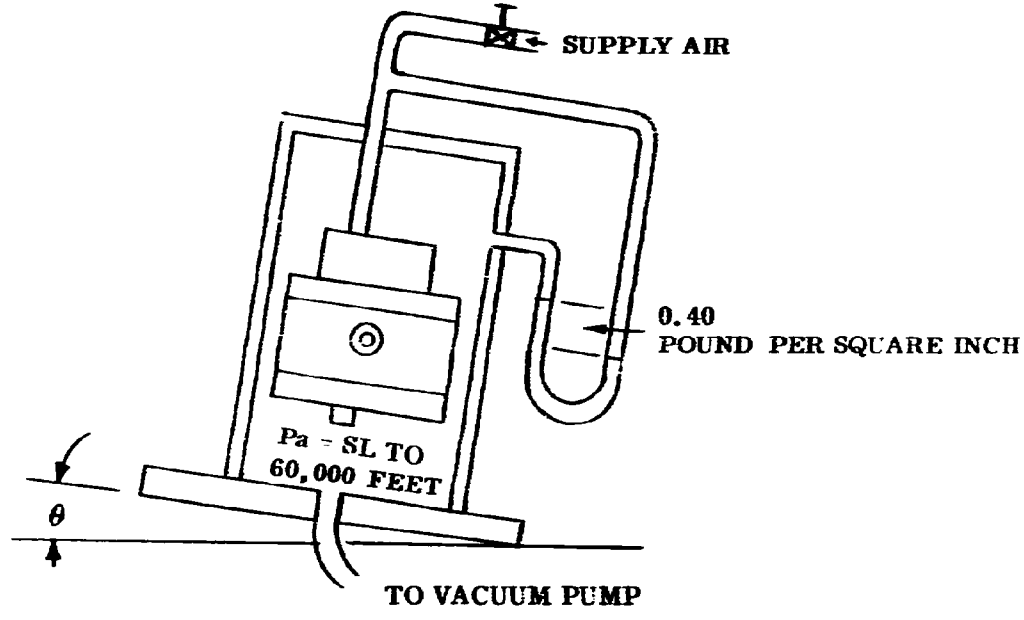

TEST RESULTS

	SEA LEVEL		60,000 FEET	
θ_1	0°	5.5°	0°	6°
θ_2	>	12°	>	10°
θ_3	5.5°	12°	6°	10°
T	2.0 SECONDS		1.0 SECOND	

θ_1 - UNIT INDICATES FREE FLIGHT

θ_2 - UNIT INDICATES CAPTIVE FLIGHT

θ_3 - HYSTERESIS (EITHER θ_1 OR θ_2)

T - ARMING TIME

P_a - AMBIENT PRESSURE
(14.7 POUNDS PER SQUARE INCH @ SL TO
1.04 POUNDS PER SQUARE INCH @ 60,000 FEET ALTITUDE)

Figure 10. Fluidic Free-Flight Sensor Altitude Test

TABLE IX. HIGH ALTITUDE OPERATION TEST RESULTS

P_R (Psig)	Lock-in Angle (Degrees)	RC Timer (Second)	Lock-out Angle (Degrees)	Hysteresis (Degrees)	Timer Accuracy (Percent)
0.33	6.0	1.0 (Approx)	10.0	4.0	50
0.33	6.0	1.0 (Approx)	11.0	5.0	50
0.33	6.0	1.0 (Approx)	10.0	4.0	50
0.33	6.0	1.0 (Approx)	10.5	4.5	50
0.33	6.0	1.0 (Approx)	10.0	4.0	50
0.33	6.0	1.0 (Approx)	10.5	4.5	50
0.33	6.0	1.0 (Approx)	10.0	4.0	50
0.33	6.0	1.0 (Approx)	10.5	4.5	50
0.33	6.0	1.0 (Approx)	10.5	4.5	50
0.33	6.0	1.0 (Approx)	10.5	4.5	50
0.33	6.0	1.0 (Approx)	10.5	4.5	50

Notes:

1. Vacuum chamber pressure set at 1.04 psi (equivalent to 60,000 feet altitude).
2. Supply pressure P_{S1} set at approximately 0.4 pound per square inch.
3. Air density at 60,000 feet altitude caused timer to run fast.
4. The sensor was tested at Flow Condition 2 (one vent port open initially).

HIGH DRAG COMPATIBILITY TEST

GENERAL

The fluidic free-flight sensor is required to operate properly when the weapon has been released in the high drag mode. The relatively high deceleration along the longitudinal axis caused by the deceleration device will tend to degrade the sensitivity of the free-flight sensor. Consequently, tests under a simulated high drag environment are required to verify that the system will function as desired.

TEST PROCEDURE

The free-flight sensor module containing the regulator, filter, modified sensor subassembly, and timer was tested using the same procedure established for the free-flight test. However, the sensor subassembly was modified by replacing the carbon steel spherical masses with tungsten masses. Since the density of tungsten is approximately 2.60 times that of steel, a 2.6g environment along the axis of the system could be simulated.

The test results must be converted to the lateral acceleration to determine the effect of increased drag to the sensitivity of the FFFS to free-flight environment. The lock-in angle with the tungsten floating mass was approximately 3 degrees while it was approximately 6 degrees with the steel floating mass (Table X).

Lateral acceleration = 33.2 x 2.6 x sin 3 degrees = 4.4 feet per second per second for 2.6g drag and = 32.2 x sin 6 degrees = 3.4 feet per second per second for one g drag. Due to the variation from test to test, these results do not appear to reflect a significant difference due to variation in drag.

TABLE X. HIGH DRAG COMPATIBILITY TEST RESULTS

P_{S1} (Psig)	Lock-in Angle (Degrees)	RC Time (Seconds)	Lock-out Angle (Degrees)	Hysteresis (Degrees)	Timer Accuracy (Percent)
0.33	2.0	2.0	6.5	4.5	100
0.33	1.5	2.0	5.5	4.0	100
0.33	1.5	2.0	5.0	3.5	100
0.33	1.5	2.0	5.5	4.0	100
0.33	2.0	2.0	4.5	2.5	100
0.33	1.5	2.0	5.0	3.5	100
0.33	1.5	2.0	5.0	3.5	100
0.33	1.5	2.0	5.5	4.0	100
0.33	1.5	2.0	5.5	4.0	100
0.33	2.0	2.0	5.0	3.0	100
5.00	2.5	2.0	6.0	3.5	100
5.00	3.0	2.0	6.0	3.0	100
5.00	3.0	2.0	6.0	3.0	100
5.00	3.0	2.0	5.5	2.5	100
5.00	3.0	2.0	6.0	3.0	100
5.00	3.0	2.0	6.0	3.0	100
5.00	3.0	2.0	6.0	3.0	100
5.00	3.0	2.0	5.5	2.5	100
5.00	3.0	2.0	6.0	3.0	100
5.00	2.5	2.0	6.0	3.5	100
10.00	2.5	2.0	5.5	3.0	100
10.00	3.0	2.0	6.0	3.0	100
10.00	2.5	2.0	5.5	3.0	100
10.00	3.0	2.0	5.5	2.5	100
10.00	3.0	2.0	6.0	3.0	100
10.00	3.0	2.0	5.5	2.5	100
10.00	2.5	2.0	6.0	3.5	100
10.00	3.0	2.0	6.0	3.0	100
10.00	2.5	2.0	5.5	3.0	100
10.00	3.0	2.0	5.5	2.5	100

NOZZLE AND NOSE CONE VENT EFFICIENCY TEST

GENERAL

The fluidic free-flight sensor is designed to operate at flight speeds of 200 feet per second and greater. To assure sensor subassembly and timer accuracy, the ram air pressure is regulated to the minimum pressure available throughout this speed range. This pressure is 0.33 pound per square inch which corresponds to 200 feet per second. Therefore, the nozzle must not cause a significant pressure drop so that 0.33 pound per square inch reaches the regulator at a 200 feet per second release speed. Also, the nose cone vent port must be located so that a 0.33 pound per square inch pressure drop exists across the sensor subassembly and the fluidic timer. Tests are required to determine these efficiencies.

TEST PROCEDURE

The nose cone assembly was subjected to a ram air environment using an open jet blower. Pressure readings were made at the nozzle entrance, regulator entrance, and nose cone vent port. The regulated pressure was determined for each supply pressure using the data collected in the free-flight test (Table XI). Data collected from these taps will be used to calculate the efficiencies using the following equations:

$$\eta_N = \frac{P_{S1}}{P_N} \quad \text{and} \quad \eta_v = \frac{P_R - P_v}{0.33}$$

where

η_N = nozzle efficiency

η_v = vent efficiency

P_{S1} = regulator entrance pressure

P_R = regulated pressure

P_v = vent pressure

P_N = nozzle entrance pressure

TABLE XI. NOZZLE AND NOSE CONE VENT EFFICIENCY TEST RESULTS

P_{S1} (Psig)	Velocity (Fps)	P_N (Psig)	P_R (Psig)	P_V (Psig)	η_N (Percent)	η_v (Percent)
0.325	199	0.325[2]	0.310	-0.080	100	118
0.340	206	0.340[2]	0.310	-0.080	100	118
0.428	231	0.428[2]	0.315	-0.105	100	127
0.595	272	0.595[2]	0.328	-0.140	100	141
1.015	356	1.015[2]	0.330	-0.230	100	170
0.325	199	0.325[3]	0.310	-0.090	100	121
0.325	199	0.325[4]	0.310	-0.020	100	100
0.325	199	0.325[5]	0.310	-0.140	100	136

Notes:

1. Jet exit plane 4.0 inches in diameter.
2. Model entrance nozzle located 4.50 inches aft of jet exit plane and 0.85 inch right of jet center line.
3. Model entrance nozzle located 2.00 inches aft of jet exit plane and 0.85 inch right of jet center line.
4. Model entrance nozzle located 4.50 inches aft of jet exit plane and 1.85 inches right of jet center line.
5. Model entrance nozzle located 4.50 inches aft of jet exit plane and 0.15 inch left of jet center line.

INITIAL DISTRIBUTION

HQ USAF	
RDQRM	2
SAMID	1
XOXFCM	1
RDPA	1
AFSC/SDWM	1
ASD/ENYS	1
AFWL/DOUL	1
AUL/AU/LSE-70-239	1
REDSTONE SCI INFO CTR/DOC SEC	2
USA ABERDEEN R&D CTR	
AMXRD-BTL	2
FRANKFURD ARSENAL/LIB,K2400	1
PICATINNY ARSENAL/SMUPA-TS-T-S	1
HARRY DIAMOND LAB/AMXDO-DA	1
USN ORD LAB (CODE 730)	2
USNWC (CODE 753)/TECH LIB	1
DDC CAMERON STN	2
AFATL	
DLOSL	2
DL	1
DLOU	1
DLGZ	1
DLJ	1
DLW	1
DLQ	1
TRADOC/ADTC-DO	1
OFF CHF NAV OPNS/OP-982E	1
INFRARED INFO & ANAL (IRIA)	
UNIV MICH	1
HQ PACAF (IGY)	1
AVCO PREC PROD DIV	2

(The reverse of this page is blank)

UNCLASSIFIED
Security Classification

DOCUMENT CONTROL DATA - R & D

(Security classification of title, body of abstract and indexing annotation must be entered when the overall report is classified)

1. ORIGINATING ACTIVITY (Corporate author)
Avco Precision Products Division
Sheridan Street
Richmond, Indiana

2a. REPORT SECURITY CLASSIFICATION
UNCLASSIFIED

2b. GROUP

3. REPORT TITLE
ENGINEERING DEVELOPMENT OF THE FLUIDIC FREE-FLIGHT SENSOR FOR USE IN BOMB FUZES

4. DESCRIPTIVE NOTES (Type of report and inclusive dates)
Final Report—August 1971 Through December 1972

5. AUTHOR(S) (First name, middle initial, last name)
John V. Murphy

6. REPORT DATE
February 1973

7a. TOTAL NO. OF PAGES
43

7b. NO. OF REFS

8a. CONTRACT OR GRANT NO.
F08635-72-C-0003

b. PROJECT NO.
2508

c.
Task No. 05

d. Work Unit No. 012

9a. ORIGINATOR'S REPORT NUMBER(S)

9b. OTHER REPORT NO(S) (Any other numbers that may be assigned this report)
AFATL-TR-73-18

10. DISTRIBUTION STATEMENT
Distribution limited to U. S. Government agencies only; this report documents test and evaluation; distribution limitation applied February 1973. Other requests for this document must be referred to the Air Force Armament Laboratory (DLJF), Eglin Air Force Base, Florida 32542.

11. SUPPLEMENTARY NOTES
Available in DDC

12. SPONSORING MILITARY ACTIVITY
Air Force Armament Laboratory
Air Force Systems Command
Eglin Air Force Base, Florida

13. ABSTRACT

The objective of this development program was to determine the feasibility of a fluidic free-flight sensor (FFFS) for use with general purpose and cluster bomb fuzes. The FFFS must establish that the bomb has been safely released, that the velocity of the bomb is 200 feet per second or greater, and that the bomb is in a freefall condition for at least two seconds during the first four seconds after lanyard initiation. These requirements were met by designing an acceleration sensor for sensing free flight and a mechanical arming linkage, both of which are powered by ram air from the bomb slip stream. A ram air pressure regulator was provided so that air pressure used to drive the free-flight sensor and arming linkage remained constant at all velocities above 200 feet per second. The arming linkage was bias loaded so a ram air pressure equivalent to 200 feet per second is required to perform the arming function. One FFFS was fabricated and bench tested by the contractor to determine adequacy of the design and two were delivered for captive flight and drop tests. The two delivered FFFS's were each equipped with two pressure switches and one microswitch to monitor regulator output pressure, sensor function, and arming function during test. A recorder was provided to record the action of the three monitoring switches during drop test. Flight tests and drop tests have indicated feasibility of the FFFS to determine that the bomb has been safely dropped from the aircraft and is in a free-flight condition.

DD FORM 1 NOV 65 1473

UNCLASSIFIED
Security Classification

14. KEY WORDS	LINK A ROLE	LINK A WT	LINK B ROLE	LINK B WT	LINK C ROLE	LINK C WT
FFFS						
Fluidic Free-Flight Sensor						
Acceleration Sensor						
Bomb Safing & Arming						