UNCLASSIFIED

AD NUMBER

AD902920

NEW LIMITATION CHANGE

TO

Approved for public release, distribution unlimited

FROM

Distribution authorized to U.S. Gov't. agencies only; Administrative/Operational Use; 08 DEC 1971. Other requests shall be referred to Naval Fleet Missile System, Analysis and Evaluation Group, Corona, CA 91720.

AUTHORITY

USNWC ltr, 30 Apr 1974

THIS PAGE IS UNCLASSIFIED

GIDEP Form 1A:12-71

REPORT SUMMARY SHEET

ACCESS NUMBER D7913

1. COMPONENT/PART NAME PER GENERIC CODE: Modules, Capacitor-Resistor

2. PROGRAM OR WEAPON SYSTEM: YA1M-9H

3. TEST COMPL. 18 11 71 (DAY MO. YR.); REPT. COMPL. 8 12 71

4. ORIGINATOR'S REPORT TITLE: Qualification of detector and sync. filter modules (A-3)

5. ORIGINATOR'S REPORT NO.: Q-1487 Rev. A

6. TEST TYPE, ETC.: Qualification (11) 8 Dec 71

7. THIS TEST (SUPERSEDES) (SUPPLEMENTS) REPORT NO: N/A

ITEM	8A. PART TYPE, SIZE, RATING, LOT, ETC.	9. VENDOR & H4 CODE NO	10. VENDOR PART NO.	11. IND./GOV STD NO	12 TOTAL TESTED
1	Detector and sync.	Raytheon 05030	2606038 Rev.	2606038 Rev.	14
2	Filter Modules (A-3)		(12) 38p.		
3	Encapsulated				
4	15 N00019-70-C-0269				

(OVER)

13. INTERNAL SPECS. ETC REQ'D TO UTILIZE REPT.		ENCL	SENT WITH REPORT NO.	14. MIL. SPECS /STDS. REFERENCED IN 15C	
A	2606038 Rev. -E	X		D	MIL-STD-202
B	XAS-1846		530.00.00.00-X7-01	E	
C				F	

15A. ITEM	TEST OR ENVIRONMENT	C PER SPEC	D SPEC. PARAGRAPH/ METHOD/CONDITION	E TEST LEVELS, DURATION AND OTHER DETAILS	F NO TESTED	G NO FAILED
ALL	GROUP I					
	Vis. and Mech Inspection	B	4.14.1	Workmanship, materials, processes, dimensions, interchangeability and markings	4	0
ALL	Electrical Characteristics	A	Sheets 1, 4 Tables I, II	(10) C/Bridge	4	0
	Resistance			Pre-Environ. 0.1 OHM max. / Post-Environ. 0.2 OHM max.	4	0
	Supply Current (5)			Pre-Environ. 10 MADC max. / Post-Environ. 15 MADC max.	4	0
	Supply Current (29)			Pre-Environ. 30 MADC max. / Post-Environ 35 MADC max.	4	0
	Supply Current (19)			Pre-Environ. 10 MADC max. / Post-Environ. 15 MADC max.	4	0
	Supply Current (35)			Pre-Environ. 10 MADC max. / Post-Environ. 15 MADC max.	4	0

(OVER)

16. SUMMARY OF REPORT, NATURE OF FAILURES AND CORRECTIVE ACTIONS TAKEN:

Test data barely legible and not suitable for microfilming; available on a loan basis from submitting participant (X7).

(13) GIDEP (19)

22 REPT. NO. 530.34.00.00-X7-01

17 ENVIRONMENTAL EXPOSURE CODES: BMST/UVYZ

18 APR 1972

(OVER)

18 TESTED BEYOND VENDOR CATALOG SPECIFICATIONS	19 VENDOR INFORMED BY COPY OF REPORT	20 SIGNED	21 CONTRACTOR	SUBCONTRACTOR
YES [ ]	[X]	Demetrios Kostopoulos	NWC/CL	Raytheon

REPRODUCTION OR DISPLAY OF THIS MATERIAL FOR SALES OR PUBLICITY PURPOSES IS PROHIBITED.

38

403 019

001

AD902920L

D7913

ACCESSION for
NTIS
DDC
UNANNOUNCED
JUSTIFICATION
BY
DISTRIBUTION/AVAILABILITY CODES
Dist.
B

GIDEP Form 1C:12-71 REPORT SUMMARY SHEET (CONTINUATION)

15A Item	TEST OR ENVIRONMENT	C PER SPEC	D SPEC. PARAGRAPH/ METHOD/CONDITION	E TEST LEVELS, DURATION AND OTHER DETAILS	F NO. TESTED	G NO. FAILED
	Aud. Amp. Output			Pre-Environ. 8.0 ±0.75 VRMS / Post-Environ. 8.0 ±1.0 VRMS	4	0
	Phase Adjust Difference			Pre-Environ. 14 ± 5 KOHM / Post-Environ. 14 ± 5 KOHM	4	0
	Det. Ampl. Output			Pre-Environ. 5.75 ± 3.0 VRMS / Post-Environ. 5.75 ± 3.0 VRMS	4	0
	Sync Filter Output			Pre-Environ. 0.43 ± 0.05 / Post-Environ. 0.43 ± 0.07 VRMS	4	0
	Sync Filter Bandwidth			Pre-Environ. 9 ± 2 Hz. / Post-Environ. 9 ± 3 Hz.	4	0
	R/L Output			Pre-Environ. 0.75 ± 0.10 VRMS / Post-Environ. 0.75 ± 0.20 VRMS	4	0
	U/D Output			Pre-Environ. 0.75 ± 0.10 VRMS / Post-Environ. 0.75 ± 0.20 VRMS	4	0
	R/L Switching Symetry			Pre-Environ. 0.2 MSEC max. / Post-Environ. 0.4 MSEC max.	4	0
	U/D Switching Symetry			Pre-Environ. 0.2 MSEC max. / Post-Environ. 0.4 MSEC max.	4	0
	Sync Filter Noise			Pre-Environ. 10 MVRMS max. / Post-Environ. 15 MVRMS max.	4	0
	Seam Circuit Voltage			Pre-Environ. 2.35 ± 0.15 VRMS / Post-Environ. 2.35 ± 0.25 VRMS	4	0
	Seam Circuit Phase			Pre-Environ. 12.0 ± 5° / Post-Environ. 120 ± 6°	4	0
All	GROUP II					
ALL	Thermal Shock	D	Method 107 Condition B	-65°, 25°, 125°, 25°C, 5 cycles; followed by electrical characteristics	4	0
ALL	Humidity Bake	D	Method 103 Condition B	104°F, 24 hrs; followed by electrical characteristics	4	0
ALL	Humidity	D	Method 103 Condition B	40°C, 90 to 95% RH, 90 hrs.; followed by electrical characteristics	4	0
ALL	Low Temperature	B	4.12.2	-55°C, 15% RH, 4 hrs.; followed by electrical characteristics	4	0
ALL	High Temperature	B	4.12.1	+125°C, 4 hrs; followed by electrical characteristics	4	0

16. SUMMARY OF REPORT, NATURE OF FAILURES AND CORRECTIVE ACTIONS TAKEN:

Distribution limited to U.S. Gov't. agencies only; Test and Evaluation; 11 SEP 1972. Other requests for this document must be made through Naval Fleet Missile Systems Analysis & Evaluation Group (Code 862) Corona, Calif. 91720 GIDEP office.

21. REPT. NO. 530.34.00.00-X7-07

D7913

15A ITEM	TEST OR ENVIRONMENT	C PER SPEC	D SPEC. PARAGRAPH/ METHOD/CONDITION	E TEST LEVELS, DURATION AND OTHER DETAILS	F NO. TESTED	G NO. FAILED
ALL	Impact Shock	B	4.12.7	30 impact shocks, 50 gravity units each, 5 shocks in opposite direc-	4	0
				tions; followed by electrical characteristics		
ALL	Vibration	D	Method 204 Condition B	15G (peak), 10 to 2,000 Hz, 20 min, 12 times (total of 36 times);	4	0
				followed by electrical characteristics		
ALL	Visual External	B	4.14.1	Workmanship, materials, processes, dimensions, interchangeability and	4	0
				markings		
All	GROUP III					
ALL	Terminal Strength	B	4.10.5	Axial pull of 5 lbs. for 10 sec., 90 degree bends; job load by	4	0
				electrical characteristics		
ALL	Vis. & Mech. Inspection	B	4.14.1	Same as Group I; followed by electrical characteristics	4	0
ALL	Res. to Solder Heat	D	Method 210 Condition B	260°C, 10 sec.; followed by electrical characteristics	2	0
ALL	Storage	B	4.12.3	-65° and +125°C for 96 hrs. each; followed by electrical character-	4	0
				istics, humidity bake, electrical characteristics, humidity electrical		
				characteristics, visual external, terminal strength, electrical		
				characteristics		
ALL	Flame Resistance			Self-extinguishing or not support combustion for more than 60 sec.;	1	0
				followed by visual and mechanical examination, electrical character-		
				istics		
ALL	GROUP IV					
	Life first Profile	D	Method 108 Condition C	96 hrs; followed by electrical characteristics	4	0

16. SUMMARY OF REPORT, NATURE OF FAILURES AND CORRECTIVE ACTIONS TAKEN:

21. REPT. NO: 530.34.00.00-X7-07

D7913

GIDEP Form 1C:12-71

REPORT SUMMARY SHEET (CONTINUATION)

15A. B ITEM	TEST OR ENVIRONMENT	C PER SPEC	D SPEC. PARAGRAPH/ METHOD/CONDITION	E TEST LEVELS, DURATION AND OTHER DETAILS	F NO TESTED	G NO FAILED
ALL	Life 2nd Profile	D	Method 108 Condition C	72 hrs; followed by electrical characteristics	4	0
ALL	Life 3rd Profile	D	Method 108 Conditon C	96 hrs; followed by electrical characteristics	4	0
ALL	Life 4th Profile	D	Method 108 Condition C	72 hrs; followed by electrical characteristics	4	0
ALL	Life 5th Profile	D	Method 108 Condition C	96 hrs; followed by electrical characteristics	4	0
ALL	Life 6th Profile	D	Method 108 Condition C	72 hrs, total hrs: 504.0; followed by electrical characteristics, visual examination, terminal strength, electrical characteristics	4	0
ALL	Visual Internal	B	4.14.2	Materials, internal lead wires, internal mountings and workmanship	2	0

16. SUMMARY OF REPORT, NATURE OF FAILURES AND CORRECTIVE ACTIONS TAKEN:

Detector and sync. filter modules have successfully passed the requirements; Raytheon Company - Lowell is considered to be a qualified source for Detector and Sync. Filter Modules (A-3).

21. REPT. NO: 530.34.00.00-X7-07

D7913

NOTICES PAGE

FOREIGN NATION RELEASE

This information is furnished upon the condition that it will not be released to another Nation without specific authority of the cognizant agency (Military or NASA) of the United States Government, and that the information be provided substantially the same degree of protection afforded it by the Department of Defense of the United States.

DISCLAIMER OF LIABILITY FROM ACT OF TRANSMITTAL

When Government drawings, specifications or other data are used for any purpose other than in connection with a definitely related Government procurement operation, the United States Government thereby incurs no responsibility nor any obligation whatsoever; and the fact that the Government may have formulated, furnished, or in any way supplied the said drawings, specification, or other data, is not to be regarded by implication or otherwise as in any manner licensing the holder or any other person or corporation, or conveying any rights or permission to manufacture, use, or sell any patented invention that may in any way be related thereto.

Any information disseminated by the Administration Office of the Government-Industry Data Exchange Program (GIDEP) is intended to promote test data utilization in the National interest among groups engaged in the military weapons, aerospace and related programs.

Dissemination of said information does not imply verification or endorsement of the information. The originator, in submitting the material is acting in accordance with the requirements of his contract, and neither the originator nor the disseminator assumes any liability to parties adopting any product, process or practice based upon the usage of the information. Its presenting the success of failure of one (or several) part number(s), model(s), and lot(s) under specific environment and output requirements, does not imply that other products not herein reported on are either inferior or superior.

OMISSION OF CHARGES FOR FOLLOW-ON ACTIONS

Any compliance by the report originator with requests from recipients for more detailed information in GIDEP reports originated under Government contracts will be considered within the scope of present contractual obligations. Compliance with such requests will be at the discretion of the report originator and will be performed without cost or obligation to the requester unless otherwise negotiated in advance.

REPRODUCTION OF THIS REPORT

Reproduction or duplication of any portion of this report is expressly forbidden, except by those organizations receiving it directly from the GIDEP Administration Office or originator, for their internal use or the use of their subcontractors. Reproduction or display of all or any portion of this material for any sales, advertising or publicity purposes is prohibited.

REPORT: Q-1427
PART NUMBER: 2606038 Rev.-

PART NAME: Det. & Sync. Filter Module (A-3)
PROGRAM: Solid State Sidewinder
VENDOR: Raytheon Co. - Lowell, Mass.

RAYTHEON

75-292-P1 (9/70)

CUSTOMER REPORT NO.	Q-1427 Rev. A	RAYTHEON REPORT NO.	Q-1427 Rev. A
		REVISION	

REPORT OF TEST ON: Qualification of (14) Detector and Sync. Filter modules (A-3) P/N 2606038 Rev. — submitted by Raytheon Company - Lowell, Massachusetts.

TEST PERFORMED BY

Raytheon Company

TEST AUTHORIZED BY

DCASO

CONTRACT NO.

N-000-19-70-C-0269

RAYTHEON COMPANY
MISSILE SYSTEMS DIVISION
LOWELL PLANT

007

RAYTHEON

76-202-P2 (9/70)

TABLE OF CONTENTS

PARAGRAPH NO.	SUBJECT	PAGE
	Title Page	i
	Table Of Contents	ii
	Liability Notice	iii
	Signature Sheet	1
	Summary Sheet	2
	Test Summary Sheet	10
	Enclosure I - Test Data	23
	Enclosure II - Qual. Test Incompatability Notice	176
	Enclosure III - Test Authorization	179
	Enclosure IV - Lowell Deviation Waiver Requests	185

RAYTHEON

75-292-P4 (9/70)

VENDOR QUALIFICATION TEST REPORT

CUSTOMER REPORT NO. Q-1427 Rev. A

RAYTHEON REPORT NO. Q-1427 Rev. A

REVISION _____

REPORT OF TEST ON: Qualification of (14) detector and sync. filter modules (A-3) P/N 2606038 Rev. — submitted by Raytheon Company - Lowell, Massachusetts.

TEST PERFORMED BY

Raytheon Company

TEST AUTHORIZED BY

DCASO

CONTRACT NO.

N-000-19-70-C-0269

	DATE	SIGNATURE
TEST INITIATED	9-17-71	
TEST COMPLETED	11-18-71	
REPORT WRITTEN BY		C. Bridge
TECHNICIAN		
TEST ENGINEER	2/2/72	John T. Henry
PRODUCT ENGRG. SECTION HEAD	2/7/72	L. Calderwood
PROJECT OFFICE	2/7/72	[illegible]
RELIABILITY ENGRG. MANAGER	2/7/72	Charles J. [illegible]
RELIABILITY ENGRG. SUPERVISOR	1/25/72	Boyd Cooley
WITNESSED BY		
CUSTOMER		
FINAL RELEASE		

RAYTHEON

75-292-P5 (9/70)

SUMMARY SHEET

1. COMPONENT/PART NAME PER GENERIC CODE	2. PROGRAM OR WEAPON SYSTEM	3.	DAY	MO.	YEAR
Detector and Sync. Filter Mod.	YAIM-9H	TEST COMPLETE	18	11	71
4. RAYTHEON REPORT TITLE		REPORT COMPLETE	8	12	71
Vendor Qual. Test Report	5. RAYTHEON REPORT NO. Q-1427 Rev. A	6. TEST TYPE Qualification			

7. THIS TEST [ ] SUPERSEDES [ ] SUPPLEMENTS REPORT NO. N/A

8 ITEM	8A. PART TYPE, SIZE, RATING, LOT, ETC.	9. VENDOR	10. VENDOR PART NO.	11. IND./GOVT. STANDARD NO.	12. TOTAL TESTED
1	(A-3) Detector & Sync. Filt.	Raytheon	2606038 Rev. -	2606038 Rev -	14
2					
3					
4					

	13. INTERNAL SPECS, ETC. REQUIRED TO UTILIZE REPORT	ENCL.	SENT WITH REPORT NO.		14. MIL SPECS/STANDARDS REFERENCED IN 15C
A	2606038 Rev. -	No	N/A	D	XAS-1846
B				E	
C				F	

B ITEM	15A. TEST OR ENVIRONMENT	C PER SPEC.	D SPEC. PARAGRAPH/ METHOD/CONDITION	E TEST LEVELS, DURATION AND OTHER DETAILS	F NO. TESTED	G NO. FAILED
1	Vis.&Mech.Insp.	14	4.14.1	3.9	4	0
1	Electrical	14	4.11	3.4	4	0
1	Thermal Shock	14	4.12.4	3.6.4	4	0
1	Electrical	14	4.11	3.4	4	0
1	Humidity Bake	14	4.12.5	3.6.5	4	0
1	Electrical	14	4.11	3.4	4	0

16. SUMMARY OF REPORT, NATURE OF FAILURES AND CORRECTIVE ACTIONS TAKEN

21. REPORT NO. Q-1427 Rev. A

17. TESTED BEYOND VENDOR CATALOG SPECIFICATIONS [ ] YES	18. VENDOR INFORMED OF TEST RESULTS BY [ ] LETTER [X] COPY OF REPORT [ ] ORAL		
	19. SIGNED C. Bridge	20. CONTRACTOR Raytheon Co.	SUBCONTRACTOR None

RAYTHEON

SUMMARY SHEET (Continuation Page)

75-29. - 06 (9/70)

B ITEM	8A. PART TYPE, SIZE, RATING, LOT, ETC.	9. VENDOR	10. VENDOR PART NO.	11. IND./GOVT. STANDARD NO.	12. TOTAL TESTED
5					
6					
7					
8					

B ITEM	15A. TEST OR ENVIRONMENT	C PER SPEC.	D SPEC. PARAGRAPH/ METHOD/CONDITION	E TEST LEVELS, DURATION AND OTHER DETAILS	F NO. TESTED	G NO. FAILED
1	Humidity	14	4.12.5	3.6.5	4	0
1	Electrical	14	4.11	3.4	4	0
1	Low Temperature	14	4.12.2	3.6.2	4	0
1	Electrical	14	4.11	3.4	4	0
1	High Temperature	14	4.12.1	3.6.1	4	0
1	Electrical	14	4.11	3.4	4	0
1	Impact Shock	14	4.12.7	3.6.7	4	0
1	Electrical	14	4.11	3.4	4	0

16. SUMMARY OF REPORT, NATURE OF FAILURES AND CORRECTIVE ACTIONS TAKEN

21. REPORT NO. Q-1427 Rev. A

RAYTHEON

SUMMARY SHEET (Continuation Page)

75-292-P6 (9/70)

B ITEM	8A. PART TYPE, SIZE, RATING, LOT, ETC.	9. VENDOR	10. VENDOR PART NO.	11. IND./GOVT. STANDARD NO.	12. TOTAL TESTED
5					
6					
7					
8					

B ITEM	15A. TEST OR ENVIRONMENT	C PER SPEC.	D SPEC. PARAGRAPH/ METHOD/CONDITION	E TEST LEVELS, DURATION AND OTHER DETAILS	F NO. TESTED	G NO. FAILED
1	Vibration	14	4.12.6	3.6.6	4	*
1	Electrical	14	4.11	3.4	4	0
1	Visual Insp.	14	4.14.1	3.3, 3.7, 3.8, 3.9	4	0
1	Terminal Strength	14	4.10.5	3.5.3	4	0
1	Electrical	14	4.11	3.4	4	0
1	End of Group II					**

16. SUMMARY OF REPORT, NATURE OF FAILURES AND CORRECTIVE ACTIONS TAKEN

* Mounting flange broke off during installation of Ser. #0226 into vibration fixture. See incompatability notice #0137.

The flange was damaged during removal of module from the impact shock fixture. A screw used to hold the fixture to the shock machine working head, was turned out under the module, which was still held down by its flange screws, jacking the module up against its flange screw and cracking the flange.

The broken flange was repaired, and module continued in qualification.

** Four modules successfully passed the requirements of Q-1427 Group II tests.

21. REPORT NO. Q-1427 Rev. A.

RAYTHEON

SUMMARY SHEET (Continuation Page)

75-292-P6 (9/70)

B ITEM	8A. PART TYPE, SIZE, RATING, LOT, ETC.	9. VENDOR	10. VENDOR PART NO.	11. IND./GOVT STANDARD NO.	12. TOTAL TESTED
5					
6					
7					
8					

B ITEM	15A. TEST OR ENVIRONMENT	C PER SPEC.	D SPEC. PARAGRAPH/ METHOD/CONDITION	E TEST LEVELS, DURATION AND OTHER DETAILS	F NO. TESTED	G NO. FAILED
1	Vis.&Mech. Insp.	14	4.14.1	3.9	4	0
1	Electrical	14	4.11	3.4	4	0
1	Heat Res.to Solder	14	4.10.4	3.5.2	2	0
1	Storage	14	4.12.3	3.6.3	4	0
1	Electrical	14	4.11	3.4	4	0
1	Humidity Bake	14	4.12.5	3.6.5	4	0
1	Electrical	14	4.11	3.4	4	0
1	Humidity	14	4.12.5	3.6.5	4	0

16. SUMMARY OF REPORT, NATURE OF FAILURES AND CORRECTIVE ACTIONS TAKEN

21. REPORT NO. Q-1427 Rev. A

RAYTHEON

SUMMARY SHEET (Continuation Page)

73-202-P6 19/701

B ITEM	8A. PART TYPE, SIZE, RATING, LOT, ETC.	9. VENDOR	10. VENDOR PART NO.	11. IND./GOVT. STANDARD NO.	12. TOTAL TESTED
5					
6					
7					
8					

B ITEM	15A. TEST OR ENVIRONMENT	C PER SPEC.	D SPEC. PARAGRAPH/ METHOD/CONDITION	E TEST LEVELS, DURATION AND OTHER DETAILS	F NO. TESTED	G NO. FAILED
1	Electrical	14	4.11	3.4	4	0
1	Vis.Inspection	14	4.14.1	3.3, 3.7, 3.8, 3.9	4	0
1	Terminal Strength	14	4.10.5	3.5.3	4	0
1	Electrical	14	4.11	3.4	4	0
1	Flame Resistance	14	4.12.8	3.6.8	1	0
	End of Group III					*

16. SUMMARY OF REPORT, NATURE OF FAILURES AND CORRECTIVE ACTIONS TAKEN

* Four modules successfully passed the requirements of Q-1427 Group III tests.

21. REPORT NO. Q-1427 Rev. A

RAYTHEON

SUMMARY SHEET (Continuation Page)

75-292-P6 (9/70)

8 ITEM	8A. PART TYPE, SIZE, RATING, LOT, ETC.	9. VENDOR	10. VENDOR PART NO.	11. IND./GOVT. STANDARD NO.	12. TOTAL TESTED
5					
6					
7					
8					

B ITEM	15A. TEST OR ENVIRONMENT	C PER SPEC.	D SPEC. PARAGRAPH/ METHOD/CONDITION	E TEST LEVELS, DURATION AND OTHER DETAILS	F NO. TESTED	G NO. FAILED
1	Vis.&Mech.Insp.	14	4.14.1	3.9	4	0
1	Electrical	14	4.11	3.4	4	0
1	Profile 1st Life Test	14	4.14.3	3.6.9	4	0
1	Electrical	14	4.11	3.4	4	0
1	Profile 2nd Life Test	14	4.14.3	3.6.9	4	0
1	Electrical	14	4.11	3.4	4	0
1	Profile 3rd Life Test	14	4.14.3	3.6.9	4	0
1	Electrical	14	4.11	3.4	4	0

16. SUMMARY OF REPORT, NATURE OF FAILURES AND CORRECTIVE ACTIONS TAKEN

21. REPORT NO. Q-1427 Rev. A

RAYTHEON

78-292-P6 (9/70)

SUMMARY SHEET (Continuation Page)

B ITEM	8A. PART TYPE, SIZE, RATING, LOT, ETC.	9. VENDOR	10. VENDOR PART NO.	11. IND./GOVT. STANDARD NO.	12. TOTAL TESTED
5					
6					
7					
8					

B ITEM	15A. TEST OR ENVIRONMENT	C PER SPEC.	D SPEC. PARAGRAPH/ METHOD/CONDITION	E TEST LEVELS, DURATION AND OTHER DETAILS	F NO. TESTED	G NO. FAILED
1	4th Life Test Profile	14	4.14.3	3.6.9	4	0
1	Electrical	14	4.11	3.4	4	0
1	5th Life Test Profile	14	4.14.3	3.6.9	4	0
1	Electrical	14	4.11	3.4	4	0
1	6th Life Test Profile	14	4.14.3	3.6.9	4	0
1	Electrical	14	4.11	3.4	4	0
1	Vis. Inspection	14	4.14.1	3.3, 3.7, 3.8, 3.9	4	0
1	Strength Terminal	14	4.10.5	3.5.3	4	0

16. SUMMARY OF REPORT, NATURE OF FAILURES AND CORRECTIVE ACTIONS TAKEN

21. REPORT NO. Q-1427 Rev. A

016

RAYTHEON

SUMMARY SHEET (Continuation Page)

8 ITEM	8A. PART TYPE, SIZE, RATING, LOT, ETC.	9. VENDOR	10. VENDOR PART NO.	11. IND. GOVT. STANDARD NO.	12. TOTAL TESTED
5					
6					
7					
8					

B ITEM	15A. TEST OR ENVIRONMENT	C PER SPEC.	D SPEC. PARAGRAPH METHOD/CONDITION	E TEST LEVELS, DURATION AND OTHER DETAILS	F NO. TESTED	G NO. FAILED
1	Electrical	14	4.11	3.4	4	0
1	Vis. Inspec.(Int)	14	4.14.2	3.3, 3.7, 3.8, 3.9	2*	0
	End of Grp. IV				**	
	End of Qual.				***	

16. SUMMARY OF REPORT, NATURE OF FAILURES AND CORRECTIVE ACTIONS TAKEN

* Two unpotted modules used for visual standards.

** Four modules successfully passed the requirements of Q-1427 Group IV tests.

*** (14) Detector and sync. filter modules (A-3) P/N 2606038 Rev. - have successfully passed the requirements of Q-1427, therefore Raytheon Company Lowell, Mass. is considered to be a qualified source of these modules.

21. REPORT NO. Q-1427 Rev. A

RAYTHEON

70-292-P7 10/70)

TEST SUMMARY SHEET

ITEM	CONTRACTOR	CONTRACTOR'S TYPE	DATE TEST COMPLETED	SAMPLE NUMBERS FROM	SAMPLE NUMBERS TO
Detector & Sync. Filter Module A-3	Raytheon Company	2606038 (Rev. -)	11-18-71		
SPEC.	**MANUFACTURER**	**MANUFACTURER'S TYPE**	**DATE TEST BEGUN**		
2606038 Rev. -	Raytheon Company	2606038 (Rev. -)	8-3-71	N/A	N/A

LINE	TEST GROUP	DATA REF. PAGE	SPEC. REF. PAGE	TEST CONDITION	SPEC. LIMITS	MEASURED VALUES MIN.	MEASURED VALUES MAX.	NO. SAMPLES TESTED	NO. SAMPLES PASSED	REMARKS
1	I	32		Visual & Mechanical Inspection	3.9	N/A	N/A	4	4	Four modules submitted to Group II tests Ser. #0207, 0226, 0236, 0242.
2	I	37		Electrical Test	3.4	Listed	Below	4	4	
				ELEC. PARAMETERS	Limits					
				1 Supply Current	10 MADC Max.	2.9	3.3			
				2 Supply Current	30 MADC Max.	13.6	14.0			
				3 Supply Current	10 MADC Max.	7.5	7.9			
				4 Supply Current	10 MADC Max.	7.7	7.9			
				5 Det. Ampl. Gain	7.25 to 8.75 VRMS	8.1	8.2			
				6 Phase Adj. Diff.	9 to 19 K ohms	14	15			
				6A Det. Ampl. Output	2.75 to 8.75 VRMS	3.2	3.32			
				7 Sync. Filter Output	0.38 to 0.48 VRMS	0.432	0.44			
				8 Sync. Filter Bandwidth	7 to 11 HZ	7.0	7.7			
				9 R/L Output	0.65 to 0.85 VRMS	0.77	0.80			
				10 U/D Output	0.65 to 0.85 VRMS	0.79	0.80			
				11 R/L Sw. Symetry	0.2 MS Max.	0	0.1			
				12 U/D Sw. Symetry	0.2 MS Max.	0	0.05			
				13 Sync. Filter Noise	12 MV RMS Max.	10.2	11.0			
				14 Seam Circuit	2.20 to 2.50 VRMS	2.33	2.35			
				RES. PARAMETERS	Limits					
				1 Between Term. 7 & 12	0.1 Ohms Max.	0.043	0.049			
3	II	40		Thermal Shock	3.6.4	N/A	N/A	4	4	
4	II	41		Electrical Test	3.4	Listed	Below	4	4	
				ELEC. PARAMETERS	Limits					
				1 Supply Current	15 MADC Max.	3.0	3.4			
				2 Supply Current	35 MADC Max.	14.0	14.4			
				3 Supply Current	15 MADC Max.	7.5	8.3			
				4 Supply Current	15 MADC Max.	7.5	8.2			
				5 Det. Ampl. Gain	7.00 to 9.00 VRMS	8.2	8.3			
				6 Phase Adj. Diff.	9 to 19 K Ohms	14.3	15.5			
				6A Det. Ampl. Output	2.75 to 8.75 VRMS	3.17	3.25			
				7 Sync. Filter Output	0.36 to 0.50 VRMS	0.435	0.440			
				8 Sync. Filter Bandwidth	6 to 12 HZ	7.6	7.8			
				9 R/L Output	0.55 to 0.95 VRMS	0.78	0.80			
				10 U/D Output	0.55 to 0.95 VRMS	0.79	0.80			
				11 R/L Sw. Symetry	0.4 MS Max.	0	0			
				12 U/D Sw. Symetry	0.4 MS Max.	0	0			
				13 Sync. Filter Noise	17 MVRMS Max.	10.4	11.2			
				14 Seam Circuit	2.10 to 2.60 VRMS	2.34	2.40			
				RES. PARAMETERS	Limits					
				1 Between Term.	0.1 Ohms Max.	0.043	0.049			

018

RAYTHEON

79-282-P7 (8/70)

TEST SUMMARY SHEET

ITEM	CONTRACTOR	CONTRACTOR'S TYPE	DATE TEST COMPLETED	SAMPLE NUMBERS FROM	SAMPLE NUMBERS TO
Detector & Sync. Filter Module A-3	Raytheon Co.	2606038 Rev. -	11-8-71		
SPEC.	MANUFACTURER	MANUFACTURER'S TYPE	DATE TEST BEGUN		
2606038 Rev. -	Raytheon Co.	2606038 Rev. -	8-3-71	N/A	N/A

LINE	TEST GROUP	DATA REF. PAGE	SPEC. REF. PAGE	TEST CONDITION	SPEC. LIMITS	MEASURED VALUES MIN.	MEASURED VALUES MAX.	NO. SAMPLES TESTED	NO. SAMPLES PASSED	REMARKS
5	II	44		Humidity Bake	3.6.5	N/A	N/A	4	4	
6	II	46		Electrical Test	3.4	Listed	Below	4	4	
				ELEC. PARAMETERS	LIMITS					
				1 Supply Current	15 MADC Max.	3.1	3.3			
				2 Supply Current	35 MADC Max.	13.5	14.3			
				3 Supply Current-	15 MADC max.	7.1	8.0			
				4 Supply Current	15 MADC Max.	5.2	8.1			
				5 Det. Ampl. Gain	7.00 to 9.00 VRMS	8.1	8.2			
				6 Phase Adj. Diff.	9 to 19 K Ohms	14.5	15.4			
				6A Det. Ampl. Output	2.75 to 8.75 VRMS	3.15	3.30			
				7 Sync. Filter Output	0.36 to 0.50 VRMS	0.425	0.440			
				8 Sync. Filter Bandwidth	6 to 12 HZ	7.5	7.7			
				9 R/L Output	0.55 to 0.95 VRMS	0.78	0.81			
				10 U/D Output	0.55 to 0.95 VRMS	0.80	0.83			
				11 R/L Sw. Symetry	0.4 MS Max.	0	0			
				12 U/D Sw. Symetry	0.4 MS Max.	0	0			
				13 Sync. Filter Noise	17 MVRMS Max.	10	12			
				14 Seam Circuit	2.10 to 2.60 VRMS	2.15	2.40			
				RES. PARAMETERS	LIMITS					
				1 Between Term.	0.1 Ohms Max.	0.045	0.048			
7	II	49		Humidity	3.6.5	N/A	N/A	4	4	
8	II	51		Electrical Test	3.4	Listed	Below	4	4	
				ELEC. PARAMETERS	LIMITS					
				1 Supply Current	15 MADC Max.	3.2	3.4			
				2 Supply Current	35 MADC Max.	14.0	14.5			
				3 Supply Current	15 MADC Max.	7.6	8.2			
				4 Supply Current	15 MADC Max.	7.7	8.2			
				5 Det. Ampl. Gain	7.00 to 9.00 VRMS	8.1	8.3			
				6 Phase Adj. Diff.	9 to 19 K Ohms	15.0	16.0			
				6A Det. Ampl. Output	2.75 to 8.75 VRMS	3.15	3.20			
				7 Sync. Filter Output	0.36 to 0.50 VMRS	0.438	0.439			
				8 Sync. Filter Bandwidth	6 to 12 HZ	7.4	7.6			
				9 R/L Output	0.55 to 0.95 VRMS	0.79	0.81			
				10 U/D Output	0.55 to 0.95 VRMS	0.80	0.81			
				11 R/L Sw. Symetry	0.4 MS Max.	0	0			
				12 U/D Sw. Symetry	0.4 MS Max.	0	0			
				13 Sync. Filter Noise	17 MVRMS Max.	9.7	10.4			
				14 Seam Circuit	2.10 to 2.60 VRMS	2.35	2.41			
				RES. PARAMETERS	LIMITS					
				1 Between Term.	0.1 Ohms Max.	0.044	0.047			

019

RAYTHEON

TEST SUMMARY SHEET

ITEM	CONTRACTOR	CONTRACTOR'S TYPE	DATE TEST COMPLETED	SAMPLE NUMBERS FROM	SAMPLE NUMBERS TO
Detector & Sync. Filter Module A-3	Raytheon Co.	2606038 Rev. -	11-18-71	N/A	N/A
SPEC. 2606038 Rev. -	MANUFACTURER Raytheon Co.	MANUFACTURER'S TYPE 2606038 Rev. -	DATE TEST BEGUN 8-3-71		

LINE	TEST GROUP	DATA REF. PAGE	SPEC. REF. PAGE	TEST CONDITION	SPEC. LIMITS	MEASURED VALUES MIN.	MEASURED VALUES MAX.	NO. SAMPLES TESTED	NO. SAMPLES PASSED	REMARKS
9	II	54		Low Temperature Test	3.6.2	N/A	N/A	4	4	
10	II	55		Electrical Test	3.4	Listed	Below	4	4	
				ELEC. PARAMETERS	LIMITS					
				1 Supply Current	15 MADC Max.	3.3	3.4			
				2 Supply Current	35 MADC Max.	14.0	14.5			
				3 Supply Current	15 MADC Max.	7.9	8.4			
				4 Supply Current	15 MADC Max.	7.9	8.4			
				5 Det. Ampl. Gain	7.00 to 9.00 VRMS	8.1	8.1			
				6 Phase Adj. Diff.	9 to 19 K Ohms	14.6	15.9			
				6A Det. Ampl. Output	2.75 to 8.75 VRMS	3.18	3.20			
				7 Sync. Filter Output	0.36 to 0.50 VRMS	0.400	0.445			
				8 Sync. Filter Bandwidth	6 to 12 HZ	7.4	7.5			
				9 R/L Output	0.55 to 0.95 VRMS	0.78	0.82			
				10 U/D Output	0.55 to 0.95 VRMS	0.78	0.83			
				11 U/D Sw. Symetry	0.4 MS Max.	0	0			
				12 R/L Sw. Symetry	0.4 MS Max.	0	0			
				13 Sync. Filter Noise	17 MVRMS Max.	9.5	14			
				14 Seam Circuit	2.10 to 2.60 VRMS	2.33	2.40			
				RES. PARAMETERS	LIMITS					
				1 Between Term.	0.1 Ohms Max.	0.043	0.046			
11	II	57		High Temperature Test	3.6.1	N/A	N/A			
12	II	58		Electrical Test	3.4	Listed	Below			
				ELEC. PARAMETERS	LIMITS					
				1 Supply Current	15 MADC Max.	3.1	3.3			
				2 Supply Current	35 MADC Max.	13.7	14.0			
				3 Supply Current	15 MADC Max.	7.4	8.0			
				4 Supply Current	15 MADC Max.	7.2	7.9			
				5 Det. Ampl Gain	7.00 to 9.00 VRMS	8.2	8.4			
				6 Phase Adj. Diff.	9 to 19 K Ohms	13.9	14.5			
				6A Det. Ampl. Output	2.75 to 8.75 VRMS	3.28	3.4			
				7 Sync. Filter Output	0.36 to 0.50 VRMS	0.435	0.440			
				8 Sync. Filter Bandwidth	6 to 12 HZ	7.4	7.6			
				9 R/L Output	0.55 to 0.95 VRMS	0.76	0.78			
				10 U/D Output	0.55 to 0.95 VRMS	0.78	0.79			
				11 R/L Sw. Symetry	0.4 MS Max.	0	0			
				12 U/D Sw. Symetry	0.4 MS Max.	0	0			
				13 Sync. Filter Noise	17 MVRMS Max.	10.0	11.0			
				14 Seam Circuit	2.10 to 2.60 VRMS	2.35	2.41			
				RES. PARAMETERS	LIMITS					
				1 Between Term.	0.1 Ohms Max.	0.046	0.052			

020

RAYTHEON

TEST SUMMARY SHEET

ITEM	CONTRACTOR	CONTRACTOR'S TYPE	DATE TEST COMPLETED	SAMPLE NUMBERS FROM	SAMPLE NUMBERS TO
Detector & Sync. Filter Module A-3	Raytheon Company	2606038 Rev. -	11-18-71	N/A	N/A
SPEC. 2606038 Rev. -	MANUFACTURER Raytheon Company	MANUFACTURER'S TYPE 2606038 Rev. -	DATE TEST BEGUN 8-3-71		

LINE	TEST GROUP	DATA REF. PAGE	SPEC. REF. PAGE	TEST CONDITION	SPEC. LIMITS	MEASURED VALUES MIN.	MEASURED VALUES MAX.	NO. SAMPLES TESTED	NO. SAMPLES PASSED	REMARKS
13	II	60		Impact Shock	3.6.7	N/A	N/A	4	4	
14	II	65		Electrical Test	3.4	Listed	Below	4	4	
				ELEC. PARAMETERS	LIMITS					
				1 Supply Current	15 MADC Max.	3.2	3.3			
				2 Supply Current	35 MADC Max.	14.0	14.5			
				3 Supply Current	15 MADC Max.	7.7	8.1			
				4 Supply Current	15 MADC Max.	7.7	8.0			
				5 Det. Ampl. Gain	7.00 to 9.00 VRMS	8.1	8.3			
				6 Phase Adj. Diff.	9 to 19 K Ohms	14.9	15.9			
				6A Det. Ampl. Output	2.75 to 8.75 VRMS	3.11	3.25			
				7 Sync. Filter Output	0.36 to 0.50 VRMS	0.435	0.442			
				8 Sync. Filter Bandwidth	6 to 12 HZ	7.6	7.6			
				9 R/L Output	0.55 to 0.95 VRMS	0.79	0.80			
				10 U/D Output	0.55 to 0.95 VRMS	0.79	0.81			
				11 R/L Sw. Symetry	0.4 MS Max.	0	0			
				12 U/D Sw. Symetry	0.4 MS Max.	0	0			
				13 Sync. Filter Noise	17 MVRMS Max.	9.6	10.0			
				14 Seam Circuit	2.10 to 2.60 VRMS	2.33	2.40			
				RES. PARAMETERS	LIMITS					
				1 Between Term.	0.1 Ohms Max.	0.044	0.049			
15	II	68		Vibration	3.6.6	N/A	N/A	4	4	Mounting flange broke off duri ' installation of module, ser. #0226, into Vibration fixture. See incompatability notice #0137
16	II	69		Electrical Test	3.4	Listed	Below	4	4	
				ELEC. PARAMETES	LIMITS					
				1 Supply Current	15 MADC Max.	3.3	3.4			
				2 Supply Current	35 MADC Max.	14.0	14.5			
				3 Supply Current	15 MADC Max.	7.4	7.9			
				4 Supply Current	15 MADC Max.	7.8	8.2			
				5 Det. Ampl. Gain	7.00 to 9.00 VRMS	8.1	8.2			
				6 Phase Adj. Diff.	9 to 19 K Ohms	14.0	15.0			
				6A Det. Ampl. Output	2.75 to 8.75 VRMS	3.20	3.33			
				7 Sync. Filter Output	0.36 to 0.50 VRMS	0.438	0.440			
				8 Sync. Filter Bandwidth	6 to 12 HZ	7.5	7.8			
				9 R/L Output	0.55 to 0.95 VRMS	0.78	0.80			
				10 U/D Output	0.55 to 0.95 VRMS	0.79	0.81			
				11 R/L Sw. Symetry	0.4 MS Max.	0	0			
				12 U/D Sw. Symetry	0.4 MS Max.	0	0			
				13 Sync. Filter Noise	17 MVRMS Max.	9.7	10.1			
				14 Seam Circuit	2.10 to 2.60 VRMS	2.33	2.40			
				RES. PARAMETERS	LIMITS					
				1 Between Term.	0.1 Ohms Max.	0.043	0.051			

RAYTHEON

78-282-P7 (9/70)

TEST SUMMARY SHEET

ITEM	CONTRACTOR	CONTRACTOR'S TYPE	DATE TEST COMPLETED	SAMPLE NUMBERS FROM	SAMPLE NUMBERS TO
Detector & Sync. Filter Module A-3	Raytheon Company	2606038 Rev. -	11-18-71	N/A	N/A
SPEC.	**MANUFACTURER**	**MANUFACTURER'S TYPE**	**DATE TEST BEGUN**		
2606038 Rev. -	Raytheon Company	2606038 Rev. -	8-3-71		

LINE	TEST GROUP	DATA REF. PAGE	SPEC. REF. PAGE	TEST CONDITION	SPEC. LIMITS	MEASURED VALUES MIN.	MEASURED VALUES MAX.	NO. SAMPLES TESTED	NO. SAMPLES PASSED	REMARKS
17	II	72		Visual Inspection	3.3, 3.7, 3.8, 3.9	N/A	N/A	4	4	
18	I	81		Terminal Strength Test	3.5.3	N/A	N/A	4	4	
19	II	82		Electrical Test	3.4	Listed	Below	4	4	
				ELEC. PARAMETERS	LIMITS					
				1 Supply Current	15 MADC Max.	2.6	3.3			
				2 Supply Current	35 MADC Max.	13.9	14.6			
				3 Supply Current	15 MADC Max.	7.4	8.0			
				4 Supply Current	15 MADC Max.	7.7	8.1			
				5 Det. Ampl. Gain	7.00 to 9.00 VRMS	8.1	8.2			
				6 Phase Adj. Diff.	9 to 19 K Ohms	13.7	14.6			
				6A Det. Ampl. Output	2.75 to 8.75 VRMS	3.30	3.40			
				7 Sync. Filter Output	0.36 to 0.50 VRMS	0.438	0.439			
				8 Sync. Filter Bandwidth	6 to 12 HZ	7.6	7.7			
				9 R/L Output	0.55 to 0.95 VRMS	0.79	0.81			
				10 U/D Output	0.55 to 0.95 VRMS	0.79	0.81			
				11 R/L Sw. Symetry	0.4 MS Max.	0	0			
				12 U/D Sw. Symetry	0.4 MS Max.	0	0			
				13 Sync. Filter Noise	17 MVRMS Max.	9.8	10.3			
				14 Seam Circuit	2.10 to 2.60 VRMS	2.33	2.40			
				RES. PARAMETERS	LIMITS					
				1 Between Term.	0.1 Ohms Max.	0.045	0.049			
				End Of Group II Tests						Four modules successfully passed the requirements of Q-1427 Group II

FOLD HERE

FOLD HERE

FOLD HERE

FOLD HERE

022

RAYTHEON

78-282-P7 (9/70)

TEST SUMMARY SHEET

ITEM	CONTRACTOR	CONTRACTOR'S TYPE	DATE TEST COMPLETED	SAMPLE NUMBERS FROM	SAMPLE NUMBERS TO
Detector & Sync. Filter Module (A-3)	Raytheon Company	2606038 Rev. -	11-18-71		
SPEC:	MANUFACTURER	MANUFACTURER'S TYPE	DATE TEST BEGUN	N/A	N/A
2606038 Rev. -	Raytheon Company	2606038 Rev. -	8-3-71		

LINE	TEST GROUP	DATA REF. PAGE	SPEC. REF. PAGE	TEST CONDITION	SPEC. LIMITS	MEASURED VALUES MIN.	MEASURED VALUES MAX.	NO. SAMPLES TESTED	NO. SAMPLES PASSED	REMARKS
20	I	87		Visual & Mech. Insp.	3.9	N/A	N/A	4	4	Four modules submitted to Group III tests ser. #0209, 0211, 0255, 0258.
21	I	92		Electrical Test	3.4	Listed	Below	4	4	
				ELECTRICAL PARAMETERS	LIMITS					
				1 Supply Current	10 MADC Max.	2.6	3.1			
				2 Supply Current	30 MADC Max.	12.8	14.2			
				3 Supply Current	10 MADC Max.	7.1	8.0			
				4 Supply Current	10 MADC Max.	7.1	8.0			
				5 Det. Ampl. Gain	7.25 to 8.75 VRMS	8.2	8.3			
				6 Phase Adj. Diff.	9 to 19 K Ohms	14.5	15.5			
				6A Det. Ampl. Output	2.75 to 8.75 VRMS	3.15	3.3			
				7 Sync. Filter Output	0.38 to 0.48 VRMS	0.438	0.440			
				8 Sync. Filter Bandwidth	7 to 11 HZ	7.4	7.6			
				9 R/L Output	0.65 to 0.85 VRMS	0.79	0.82			
				10 U/D Output	0.65 to 0.85 VRMS	0.79	0.805			
				11 R/L Sw. Symetry	0.2 MS Max.	0	0			
				12 U/D Sw. Symetry	0.2 MS Max.	0	0			
				13 Sync. Filter Noise	12 MVRMS Max.	9.4	11.0			
				14 Seam Circuit	2.20 to 2.50 VRMS	2,37	2.40			
				RES. PARAMETERS	LIMITS					
				1 Between Term. 7 & 12	0.1 Ohms Max.	0.045	0.048			
22	III	95		Resistance To Soldering Heat	3.5.2	N/A	N/A	2	2	
23	III	99		Storage	3.6.3	N/A	N/A	4	4	
24	III	105		Electrical Test	3.4	Listed	Below	4	4	
				ELECTRICAL PARAMETERS	LIMITS					
				1 Supply Current	15 MADC Max.	3.0	3.4			
				2 Supply Current	35 MADC Max.	13.8	14.5			
				3 Supply Current	15 MADC Max.	7.9	8.4			
				4 Supply Current	15 MADC Max.	7.9	8.3			
				5 Det. Ampl. Gain	7.00 to 9.00 VRMS	8.2	8.3			
				6 Phase Adj. Diff.	9 to 19 K Ohms	15.3	16.4			
				6A Det. Ampl. Output	2.75 to 8.75 VRMS	3.10	3.20			
				7 Sync. Filter Output	0.36 to 0.50 VRMS	0.440	0.442			
				8 Sync. Filter Bandwidth	6 to 12 HZ	7.6	7.7			
				9 R/L Output	0.55 to 0.95 VRMS	0.79	0.81			
				10 U/D Output	0.55 to 0.95 VRMS	0.79	0.81			
				11 R/L Sw. Symetry	0.4 MS Max.	0	0			
				12 U/D Sw. Symetry	0.4 MS Max.	0	0			
				13 Sync. Filter Noise	17 MVRMS Max.	9.0	10.5			
				14 Seam Circuit	2.10 to 2.60 VRMS	2.38	2.40			
				RES. PARAMETERS	LIMITS					
				1 Between Term.	0.1 Ohms Max.	0.043	0.049			

023

RAYTHEON

79-202-P7 (9/70)

TEST SUMMARY SHEET

ITEM	CONTRACTOR	CONTRACTOR'S TYPE	DATE TEST COMPLETED	SAMPLE NUMBERS FROM	SAMPLE NUMBERS TO
Detector & Sync. Filter Module (A-3)	Raytheon Company	2606038 Rev. -	11-18-71		
SPEC.	MANUFACTURER	MANUFACTURER'S TYPE	DATE TEST BEGUN		
2606038 Rev. -	Raytheon Company	2606038 Rev. -	8-3-71	N/A	N/A

LINE	TEST GROUP	DATA REF. PAGE	SPEC. REF. PAGE	TEST CONDITION	SPEC. LIMITS	MEASURED VALUES MIN.	MEASURED VALUES MAX.	NO. SAMPLES TESTED	NO. SAMPLES PASSED	REMARKS
25	III	108		Humidity Bake	3.6.5	N/A	N/A	4	4	
26	III	110		Electrical Test	3.4	Listed	Below	4	4	
				ELEC. PARAMETERS	LIMITS					
				1 Supply Current	15 MADC Max.	2.9	3.4			
				2 Supply Current	35 MADC Max.	13.5	14.5			
				3 Supply Current	15 MADC Max.	7.8	8.3			
				4 Supply Current	15 MADC Max.	7.7	8.2			
				5 Det. Ampl. Gain	7.00 to 9.00 VRMS	8.1	8.3			
				6 Phase Adj. Diff.	9 to 19 K Ohms	14.0	15.7			
				6A Det. Ampl. Output	2.75 to 8.75 VRMS	3.15	3.28			
				7 Sync. Filter Output	0.36 6o 0.50 VRMS	0.439	0.441			
				8 Sync. Filter Bandwidth	6 to 12 HZ	7.6	7.7			
				9 R/L Output	0.55 to 0.95 VRMS	0.79	0.82			
				10 U/D Output	0.55 to 0.95 VRMS	0.79	0.81			
				11 R/L Sw. Symetry	0.4 MS Max.	0	0			
				12 U/D Sw. Symetry	0.4 MS Max.	0	0			
				13 Sync. Filter Noise	17 MVRMS Max.	8.7	10.4			
				14 Seam Circuit	2.10 to 2.60 VRMS	2.38	2.40			
				RES. PARAMETERS	LIMITS					
				1 Between Term.	0.1 Ohms Max.	0.043	0.049			
27	III	113		Humidity	3.6.5	N/A	N/A	4	4	
28	III	115		Electrical Test	3.4	Listed	Below	4	4	
				ELEC. PARAMETERS	LIMITS					
				1 Supply Current	15 MADC Max.	2.9	3.5			
				2 Supply Current	35 MADC Max.	13.5	14.5			
				3 Supply Current	15 MADC Max.	7.7	8.4			
				4 Supply Current	15 MADC Max.	7.6	8.2			
				5 Det. Ampl. Gain	7.00 to 9.00 VRMS	8.2	8.3			
				6 Phase Adj. Diff.	9 to 19 K Ohms	14.8	16.0			
				6A Det. Ampl. Output	2.75 to 8.75 VRMS	3.10	3.24			
				7 Sync. Filter Output	0.36 to 0.50 VRMS	0.438	0.445			
				8 Sync. Filter Bandwidth	6 to 12 HZ	7.6	7.8			
				9 R/L Output	0.55 to 0.95 VRMS	0.79	0.82			
				10 U/D Output	0.55 to 0.95 VRMS	0.80	0.81			
				11 R/L Sw. Symetry	0.4 MS Max.	0	0			
				12 U/D Sw. Symetry	0.4 MS Max.	0	0			
				13 Sync. Filter Noise	17 MVRMS Max.	8.7	10.2			
				14 Seam Circuit	2.10 to 2.60 VRMS	2.39	2.40			
				RES. PARAMETERS	LIMITS					
				1 Between Term.	0.1 Ohms Max.	0.043	0.050			

024

RAYTHEON

TEST SUMMARY SHEET

ITEM	CONTRACTOR	CONTRACTOR'S TYPE	DATE TEST COMPLETED	SAMPLE NUMBERS FROM	SAMPLE NUMBERS TO
Detector & Sync. Filter Module (A-3)	Raytheon Company	2606038 Rev. -	11-18-71		
SPEC.	**MANUFACTURER**	**MANUFACTURER'S TYPE**	**DATE TEST BEGUN**		
2606038 Rev. -	Raytheon Company	2606038 Rev. -	8-3-71	N/A	N/A

LINE	TEST GROUP	DATA REF. PAGE	SPEC. REF. PAGE	TEST CONDITION	SPEC. LIMITS	MEASURED VALUES MIN.	MEASURED VALUES MAX.	NO. SAMPLES TESTED	NO. SAMPLES PASSED	REMARKS
29	III	118		Visual Inspection	3.3, 3.7, 3.8, 3.9	N/A	N/A	4	4	
30	I	123		Terminal Strength Test	3.5.3	N/A	N/A	4	4	
31	III	124		Electrical Test	3.4	Listed	Below	4	4	
				ELEC. PARAMETERS	LIMITS					
				1 Supply Current	15 MADC Max.	2.9	3.4			
				2 Supply Current	35 MADC Max.	13.6	14.3			
				3 Supply Current	15 MADC Max.	7.7	8.1			
				4 Supply Current	15 MADC Max.	7.7	8.2			
				5 Det. Ampl. Gain	7.00 to 9.00 VRMS	8.1	8.2			
				6 Phase Adj. Diff.	9 to 19 K Ohms	14.9	16.0			
				6A Det. Ampl Output	2.75 to 8.75 VRMS	3.15	3.26			
				7 Sync. Filter Output	0.36 to 0.50 VRMS	0.440	0.441			
				8 Sync. Filter Bandwidth	6 to12 HZ	7.5	7.8			
				9 R/L Output	0.55 to 0.95 VRMS	0.80	0.82			
				10 U/D Output	0.55 to 0.95 VRMS	0.79	0.81			
				11 R/L Sw. Symetry	0.4 MS Max.	0	0			
				12 U/D Sw. Symetry	0.4 MS Max.	0	0			
				13 Sync. Filter Noise	17 MVRMS Max.	8.4	10.0			
				14 Seam Circuit	2.10 to 2.60 VRMS	2.38	2.40			
				RES. PARAMETERS	LIMITS					
				1 Between Term.	0.1 Ohms Max.	0.046	0.047			
32	III	127		Flame Resistance	3.6.8	N/A	N/A	1	1	
				End Of Group III Tests						Four modules successfully passed the requirements of Q-1427 Group III.

025

RAYTHEON

TEST SUMMARY SHEET

ITEM	CONTRACTOR	CONTRACTOR'S TYPE	DATE TEST COMPLETED	SAMPLE NUMBERS FROM	SAMPLE NUMBERS TO
Detector & Sync. Filter Module (A-3)	Raytheon Co.	2606038 Rev. -	11-18-71		
SPEC. 2606038 Rev. -	MANUFACTURER Raytheon Co.	MANUFACTURER'S TYPE 2606038 Rev. -	DATE TEST BEGUN 8-3-71	N/A	N/A

LINE	TEST GROUP	DATA REF. PAGE	SPEC. REF. PAGE	TEST CONDITION	SPEC. LIMITS	MEASURED VALUES MIN.	MEASURED VALUES MAX.	NO. SAMPLES TESTED	NO. SAMPLES PASSED	REMARKS
34	I	130		Visual and Mechanical Insp.	3.9	N/A	N/A	4	4	Four modules submitted to Group IV tests Ser. #0250, 0286, 0294, 0300
35	I	135		Electrical Test	3.4	Listed	Below	4	4	
				ELEC. PARAMETERS	LIMITS					
				1 Supply Current	10 MADC Max.	2.8	3.3			
				2 Supply Current	30 MADC Max.	12.8	13.9			
				3 Supply Current	10 MADC Max.	7.1	7.9			
				4 Supply Current	10 MADC Max.	7.3	8.0			
				5 Det. Ampl. Gain	7.25 to 8.75 VRMS	8.2	8.2			
				6 Phase Adj. Diff.	9 to 19 K Ohms	14.5	15.4			
				6A Det. Ampl. Output	2.75 to 8.75 VRMS	3.24	3.40			
				7 Sync. Filter Output	0.38 to 0.48 VRMS	0.438	0.445			
				8 Sync. Filter Bandwidth	7 to 11 HZ	7.5	7.7			
				9 R/L Output	0.65 to 0.85 VRMS	0.80	0.81			
				10 U/D Output	0.65 to 0.85 VRMS	0.80	0.83			
				11 R/L Sw. Symetry	0.2 MS Max.	0	0			
				12 U/D Sw. Symetry	0.2 MS Max.	0	0			
				13 Sync. Filter Noise	12 MVRMS Max.	10.8	11.8			
				14 Seam Circuit	2.20 to 2.50 VRMS.	2.32	2.41			
				RES. PARAMETERS	LIMITS					
				1 Between Term. 7 & 12	0.1 Ohms Max.	0.044	0.047			
35	IV	138		Life Test 1St Profile (96 hrs)	3.6.9	N/A	N/A	4	4	
36	IV	139		Electrical Test	3.4	Listed	Below	4	4	
				ELEC. PARAMETERS	LIMITS					
				1 Supply Current	15 MADC Max.	2.6	3.0			
				2 Supply Current	35 MADC Max.	12.6	14.0			
				3 Supply Current	15 MADC Max.	7.0	7.5			
				4 Supply Current	15 MADC Max.	7.4	8.0			
				5 Det. Ampl. Gain	7.00 to 9.00 VRMS	8.0	8.3			
				6 Phase Adj. Diff.	9 to 19 K Ohms	14.0	14.8			
				6A Det. Ampl. Output	2.75 to 8.75 VRMS	3.30	3.48			
				7 Sync. Filter Output	0.36 to 0.50 VRMS	0.440	0.446			
				8 Sync. Filter Bandwidth	6 to 12 HZ	7.3	7.6			
				9 R/L Output	0.55 to 0.95 VRMS	0.80	0.82			
				10 U/D Output	0.55 to 0.95 VRMS	0.80	0.82			
				11 R/L Sw. Symetry	0.4 MS Max.	0	0			
				12 U/D Sw. Symetry	0.4 MS Max.	0	0			
				13 Sync. Filter Noise	17 MVRMS Max.	9.6	10.3			
				14 Seam Circuit	2.10 to 2.60 VRMS	2.31	2.40			
				RES. PARAMETERS	LIMITS					
				1 Between Term.	0.1 Ohms Max.	0.045	0.048			

RAYTHEON

70-292-P7 10/70

TEST SUMMARY SHEET

ITEM	CONTRACTOR	CONTRACTOR'S TYPE	DATE TEST COMPLETED	SAMPLE NUMBERS FROM	SAMPLE NUMBERS TO
Detector & Sync. Filter Module (A-3)	Raytheon Co.	2606038 Rev. -	11-18-71		
SPEC.	**MANUFACTURER**	**MANUFACTURER'S TYPE**	**DATE TEST BEGUN**		
2606038 Rev. -	Raytheon Co.	2606038 Rev. -	8-3-71	N/A	N/A

LINE	TEST GROUP	DATA REF. PAGE	SPEC. REF. PAGE	TEST CONDITION	SPEC. LIMITS	MEASURED VALUE MIN.	MEASURED VALUE MAX.	NO. SAMPLES TESTED	NO. SAMPLES PASSED	REMARKS
37	IV	142		Life Test 2nd Profile (72 hrs)	3.6.9	N/A	N/A	4	4	
38	IV	143		Electrical Test	3.4	Listed	Below	4	4	
				ELEC. PARAMETERS	LIMITS					
				1 Supply Current	15 MADC Max.	2.6	3.2			
				2 Supply Current	35 MADC Max.	12.6	13.8			
				3 Supply Current	15 MADC Max.	6.8	7.6			
				4 Supply Current	15 MADC Max.	7.3	8.0			
				5 Det. Ampl. Gain	7.00 to 9.00 VRMS	8.1	8.2			
				6 Phase Adj. Diff.	9 to 19 K Ohms	14.0	15.0			
				6A Det. Ampl. Output	2.75 to 8.75 VRMS	3.30	3.45			
				7 Sync. Filter Output	0.36 to 0.50 VRMS	0.440	0.448			
				8 Sync. Filter Bandwidth	6 to 12 HZ	7.4	7.8			
				9 R/L Output	0.55 to 0.95 VRMS	0.81	0.82			
				10 U/D Output	0.55 to 0.95 VRMS	0.81	0.83			
				11 R/L Sw. Symetry	0.4 MS Max.	0	0			
				12 U/D Sw. Symetry	0.4 MS Max.	0	0			
				13 Sync. Filter Noise	17 MVRMS Max.	9.3	10.4			
				14 Seam Circuit	2.10 to 2.60 VRMS	2.31	2.40			
				RES. PARAMETERS	LIMITS					
				1 Between Term.	0.1 Ohms Max.	0.045	0.049			
39	IV	146		Life Test 3rd Profile (96 hrs)	3.6.9	N/A	N/A	4	4	
40	IV	147		Electrical Test	3.4	Listed	Below	4	4	
				ELEC. PARAMETERS	LIMITS					
				1 Supply Current	15 MADC Max.	2.5	3.1			
				2 Supply Current	35 MADC Max.	12.5	13.9			
				3 Supply Current	15 MADC Max.	6.6	7.4			
				4 Supply Current	15 MADC Max.	6.9	8.0			
				5 Det. Ampl. Gain	7.00 to 9.00 VRMS	8.1	8.3			
				6 Phase Adj. Diff.	9 to 19 K Ohms	13.4	14.4			
				6A Det. Ampl. Output	2.75 to 8.75 VRMS	3.35	3.55			
				7 Sync. Filter Output	0.36 to 0.50 VRMS	0.440	0.447			
				8 Sync. Filter Bandwidth	6 to 12 HZ	7.4	7.7			
				9 R/L Output	0.55 to 0.95 VRMS	0.81	0.82			
				10 U/D Output	0.55 to 0.95 VRMS	0.80	0.83			
				11 R/L Sw. Symetry	0.4 MS Max.	0	0			
				12 U/D Sw. Symetry	0.4 MS Max.	0	0			
				13 Sync. Filter Noise	17 MVRMS Max.	9.4	10.4			
				14 Seam Circuit	2.10 to 2.60 VRMS	2.31	2.40			
				RES. PARAMETERS	LIMITS					
				1 Between Term.	0.1 Ohms Max.	0.047	0.048			

Copy available to DDC does not permit fully legible reproduction

027

RAYTHEON

TEST SUMMARY SHEET

ITEM	CONTRACTOR	CONTRACTOR'S TYPE	DATE TEST COMPLETED	SAMPLE NUMBERS FROM	SAMPLE NUMBERS TO
Detector & Sync. Filter Module (A-3)	Raytheon Company	2606038 Rev. -	11-18-71		
SPEC. 2606038 Rev. -	MANUFACTURER Raytheon Company	MANUFACTURER'S TYPE 2606038 Rev. -	DATE TEST BEGUN 8-3-71	N/A	N/A

LINE	TEST GROUP	DATA REF. PAGE	SPEC. REF. PAGE	TEST CONDITION	SPEC. LIMITS	MEASURED VALUES MIN.	MEASURED VALUES MAX.	NO. SAMPLES TESTED	NO. SAMPLES PASSED	REMARKS
41	IV	150		Life Test 4th Profile (72 Hrs)	3.6.9	N/A	N/A	4	4	
42	IV	151		Electrical Test	3.4	Listed	Below	4	4	
				ELEC. PARAMETERS	LIMITS					
				1 Supply Current	15 MADC Max.	2.5	3.2			
				2 Supply Current	35 MADC Max.	12.6	14.0			
				3 Supply Current	15 MADC Max.	7.0	7.7			
				4 Supply Current	15 MADC Max.	7.4	8.0			
				5 Det. Ampl. Gain	7.00 to 9.00 VRMS	8.2	8.3			
				6 Phase Adj. Diff.	9 to 19 K Ohms	12.8	14.2			
				6A Det. Ampl. Output	2.75 to 8.75 VRMS	3.33	3.55			
				7 Sync. Filter Output	0.36 to 0.50 VRMS	0.440	0.446			
				8 Sync. Filter Bandwidth	6 to 12 HZ	7.4	7.6			
				9 R/L Output	0.55 to 0.95 VRMS	0.80	0.82			
				10 U/D Output	0.55 to 0.95 VRMS	0.80	0.83			
				11 R/L Sw. Symetry	0.4 MS Max.	0	0			
				12 U/D Sw. Symetry	0.4 MS Max.	0	0			
				13 Sync. Filter Noise	17 MVRMS Max.	9.3	10.5			
				14 Seam Circuit	2.10 to 2.60 VRMS	2.32	2.41			
				RES. PARAMETERS	LIMITS					
				1 Between Term.	0.1 Ohms Max.	0.048	0.049			
43	IV	154		Life Test 5th Profile (96 Hrs)	3.6.9	N/A	N/A	4	4	
44	IV	155		Electrical Test	3.4	Listed	Below	4	4	
				ELEC. PARAMETERS	LIMITS					
				1 Supply Current	15 MADC Max.	2.5	3.2			
				2 Supply Current	35 MADC Max.	12.2	14.0			
				3 Supply Current	15 MADC Max.	7.0	7.6			
				4 Supply Current	15 MADC Max.	7.0	7.6			
				5 Det. Ampl. Gain	7.00 to 9.00 VRMS	8.1	8.3			
				6 Phase Adj. Diff.	9 to 19 K Ohms	13.5	14.4			
				6A Det. Ampl. Output	2.75 to 8.75 VRMS	3.37	3.51			
				7 Sync. Filter Output	0.36 to 0.50 VRMS	0.440	0.448			
				8 Sync. Filter Bandwidth	6 to 12 HZ	7.4	7.8			
				9 R/L Output	0.55 to 0.95 VRMS	0.81	0.82			
				10 U/D Output	0.55 to 0.95 VRMS	0.81	0.83			
				11 R/L Sw. Symetry	0.4 MS Max.	0	0			
				12 U/D Sw. Symetry	0.4 MS Max.	0	0			
				13 Sync. Filter Noise	17 MVRMS Max.	9.6	10.4			
				14 Seam Circuit	2.10 to 2.60 VRMS	2.32	2.41			
				RES. PARAMETERS	LIMITS					
				1 Between Term.	0.1 Ohms Max.	0.047	0.049			

RAYTHEON

73-262-P7 (9/70)

TEST SUMMARY SHEET

ITEM	CONTRACTOR	CONTRACTOR'S TYPE	DATE TEST COMPLETED	SAMPLE NUMBERS FROM	SAMPLE NUMBERS TO
Detector & Sync. Filter Module (A-3)	Raytheon Company	2606038 Rev. -	11-18-71		
SPEC. 2606038 Rev. -	MANUFACTURER Raytheon Company	MANUFACTURER'S TYPE 2606038 Rev. -	DATE TEST BEGUN 8-3-7	N/A	N/A

LINE	TEST GROUP	DATA REF. PAGE	SPEC. REF. PAGE	TEST CONDITION	SPEC. LIMITS	MEASURED VALUES MIN.	MEASURED VALUES MAX.	NO. SAMPLES TESTED	NO. SAMPLES PASSED	REMARKS
45	IV	158		Life Test 6th Profile (72 Hrs)	3.6.9	N/A	N/A	4	4	
46	IV	159		Electrical Test	3.4	Listed	Below	4	4	
				ELEC. PARAMETERS	LIMITS					
				1 Supply Current	15 MADC Max.	2.4	3.2			
				2 Supply Current	35 MADC Max.	12.5	13.9			
				3 Supply Current	15 MADC Max.	7.1	7.6			
				4 Supply Current	15 MADC Max.	7.3	7.9			
				5 Det. Ampl. Gain	7.00 to 9.00 VRMS	8.1	8.2			
				6 Phase Adj. Diff.	9 to 19 K Ohms	13.8	14.8			
				6A Det. Ampl. Output	2.75 to 8.75 VRMS	3.30	3.48			
				7 Sync. Filter Output	0.36 to 0.50 VRMS	0.440	0.448			
				8 Sync. Filter Bandwidth	6 to 12 HZ	7.4	7.6			
				9 R/L Output	0.55 to 0.95 VRMS	0.81	0.82			
				10 U/D Output	0.55 to 0.95 VRMS	0.81	0.83			
				11 R/L Sw. Symetry	0.4 MS Max.	0	0			
				12 U/D Sw. Symetry	0.4 MS Max.	0	0			
				13 Sync. Filter Noise	17 MVRMS Max.	9.5	10.3			
				14 Seam Circuit	2.10 to 2.60 VRMS	2.31	2.40			
				RES. PARAMETERS	LIMITS					
				1 Between Term	0.1 Ohms Max.	0.047	0.051			
47	IV	162		Visual Inspection	3.3, 3.7, 3.8, 3.9	N/A	N/A	4	4	
48	I	171		Terminal Strength Test	3.5.3	N/A	N/A	4	4	
49	IV	172		Electrical Test	3.4	Listed	Below	4	4	
				ELEC. PARAMETERS	LIMITS					
				1 Supply Current	15 MADC Max.	2.5	3.2			
				2 Supply Current	35 MADC Max.	12.5	13.8			
				3 Supply Current	15 MADC Max.	7.2	7.6			
				4 Supply Current	15 MADC Max.	7.3	8.0			
				5 Det. Ampl. Gain	7.00 to 9.00 VRMS	8.1	8.3			
				6 Phase Adj. Diff.	9 to 19 K Ohms	14.0	14.2			
				6A Det. Ampl. Output	2.75 to 8.75 VRMS	3.32	3.45			
				7 Sync. Filter Output	0.36 to 0.50 VRMS	0.438	0.448			
				8 Sync. Filter Bandwidth	6 to 12 HZ	7.4	7.8			
				9 R/L Output	0.55 to 0.95 VRMS	0.80	0.82			
				10 U/D Output	0.55 to 0.95 VRMS	0.80	0.82			
				11 R/L Sw. Symetry	0.4 MS Max.	0	0			
				12 U/D Sw. Symetry	0.4 MS Max.	0	0			
				13 Sync. Filter Noise	17 MVRMS Max.	9.1	10.2			
				14 Seam Circuit	2.10 to 2.60 VRMS	2.32	2.40			
				RES. PARAMETERS	LIMITS					
				1 Between Term.	0.1 Ohms Max.	0.047	0.051			

029

RAYTHEON

TEST SUMMARY SHEET

ITEM	CONTRACTOR	CONTRACTOR'S TYPE	DATE TEST COMPLETED	SAMPLE NUMBERS FROM	SAMPLE NUMBERS TO
Detector & Sync. Filter Module (A-3	Raytheon Company	2606038 Rev. -	11-18-71	N/A	N/A
SPEC.	**MANUFACTURER**	**MANUFACTURER'S TYPE**	**DATE TEST BEGUN**		
2606038 Rev. -	Raytheon Company	2606038 Rev. -	8-3-71		

LINE	TEST GROUP	DATA REF. PAGE	SPEC. REF. PAGE	TEST CONDITION	SPEC. LIMITS	MEASURED VALUES MIN.	MEASURED VALUES MAX.	NO. SAMPLES TESTED	NO. SAMPLES PASSED	REMARKS
50	I	28		Visual Inspection (Internal) End of Group IV End of Qual	3.3, 3.7, 3.8, 3.9	N/A	N/A	2	2	Two additional modules (unpotted) to be used as Qual. visual standards for workmanship. Four modules successfully passed the Group IV requirements of Q-1427.

030

NOTES:

1. MODULE SHALL BE IN ACCORDANCE WITH AS1846, UNLESS OTHERWISE SPECIFIED HEREON.

(A) 2. PREPARATION, PROCEDURES AND REQUIREMENTS FOR SOLDERING SHALL BE IN ACCORDANCE WITH WS6536 EXCEPT COMPONENT LEADS SHALL BE .030.

3. ELECTRICAL REQUIREMENTS: THE FOLLOWING REQUIREMENTS SHALL APPLY IN ADDITION TO THOSE SPECIFIED IN AS1846.
   - A. MODULE STATIC REQUIREMENTS SHALL BE AS SPECIFIED IN TABLE I.
   - B. MODULE OPERATING REQUIREMENTS, WITH MODULE INSERTED IN TEST CIRCUIT, FIGURE 1, SHALL BE AS SPECIFIED IN TABLE II.
   - (B) CAUTION: SET SWITCHES S1, S2 AND S3 TO POSITION 1 (OFF). ALSO THE RESISTANCE OF THE DECADE BOX BETWEEN PINS 3 AND 23 SHOULD BE SET TO 15 ± 1K OHMS, BEFORE INSERTING MODULE.
   - C. FOR FREQUENCIES F_1 AND F_2 SEE DWG 2412395.
   - D. TEST CIRCUIT INPUTS, UNLESS OTHERWISE SPECIFIED HEREON SHALL BE AS FOLLOWS:
     - (1) INPUT SIGNALS SHALL BE SET WITH POWER ACTIVATED.
     - (2) REFERENCE INPUT TO PINS 13 AND 15 SHALL BE 1.0 ± .2 VRMS AT F_1 ± .8% WITH THE 0° ± 1° PHASE APPLIED TO PIN 13 AND THE 90° ± 1° PHASE APPLIED TO PIN 15.
   - E. EQUIVALENT TEST EQUIPMENT MAY BE SUBSTITUTED FOR THOSE SPECIFIED.

4. PHYSICAL REQUIREMENTS: THE FOLLOWING REQUIREMENTS SHALL APPLY IN ADDITION TO THOSE SPECIFIED IN AS 1846.
   - A. COMPONENT LEADS, FEEDTHRU WIRES, AND ALL METAL CASE COMPONENTS WITHIN MODULE SHALL BE ISOLATED FROM EACH OTHER .020 MINIMUM.
     - (1) ALL COMPONENT LEADS AND ITEM 43 MAY BE INSULATED WITH ITEM 52 TO MAINTAIN REQUIRED CLEARANCE.
     - (2) ITEMS 36, 37 AND 39 MAY BE INSULATED WITH ITEM 56 TO MAINTAIN REQUIRED CLEARANCE.
     - (3) ITEM 38 MAY BE INSULATED WITH ITEM 54 TO MAINTAIN REQUIRED CLEARANCE.
     - (4) ITEM 49 MAY BE INSULATED WITH ITEM 55 TO MAINTAIN REQUIRED CLEARANCE.
   - B. BUILD-UP OF SOLDER ON ITEMS 1 AND 2 SHALL NOT EXCEED .040 MAXIMUM.
   - C. ENCAPSULATED MODULE SHALL HAVE .060 MAXIMUM CORNER RADII, UNLESS OTHERWISE SPECIFIED HEREON.
   - D. ITEM 45 SHALL BE ASSEMBLED OVER LEADS OF ITEMS 36, 37, 38 AND 39; AND ITEM 44 SHALL BE ASSEMBLED OVER LEADS OF ITEM 49 PRIOR TO MOUNTING ON ITEMS 1 AND 2.
   - E. ITEM 43 SHALL MEET THE SOLDERABILITY REQUIREMENTS OF MIL-STD-202, METHOD 208B.
   - F. DIMENSIONS NOTED NEED NOT BE HELD AFTER SOLDERING.

5. ENCAPSULATING REQUIREMENTS:
   - A. AFTER SOLDERING, APPLY 2 COATS OF ITEM 48 TO SOLDERED ASSEMBLY IN ACCORDANCE WITH MANUFACTURER'S INSTRUCTIONS. THEN ENCAPSULATE MODULE TO CONFIGURATION SHOWN USING ITEM 46.
     - (1) ENCAPSULATION SHALL BE CONTINUOUS AND FREE FROM CRACKS.
     - (2) SURFACE IRREGULARITIES LARGER THAN .100 DIAMETER BY .050 DEEP REPAIRED USING ITEM 46.
     - (3) ALL MODULE COMPONENTS, EXCEPT ITEM 3 PROTRUDING FROM SURFACE D COMPLETELY COVERED WITH ENCAPSULATING MATERIAL.
     - (4) ENCAPSULATION FLASH AT BASE OF ITEM 3 PROTRUDING FROM SURFACE EXCEED .030 ABOUT ITEM 3, NOR PROJECT ABOVE SURFACE DATUM [-

6. SYMBOLS USED HEREON ARE DEFINED AS FOLLOWS:
   - A. + INDICATES ANODE END OF DIODE OR POSITIVE END OF POLARIZED CAPA
   - B. ● INDICATES COMPONENT LEAD WIRE.
   - C. ● INDICATES FEEDTHRU LEAD WIPE.
   - D. ▬ INDICATES COPPER CIRCUIT NEAR SIDE.
   - E. ▬ INDICATES COPPER CIRCUIT FAR SIDE.
   - F. ◒ ◒ INDICATES PADS CONNECTED TO GROUND PLANE FAR SIDE.

7. REFERENCE DESIGNATIONS SHOWN ARE FOR REFERENCE ONLY AND NEED NOT APPEAR

8. PARTIAL REFERENCE DESIGNATIONS ARE SHOWN. FOR COMPLETE DESIGNATION, PF DESIGNATION WITH UNIT NUMBER OR ASSEMBLY DESIGNATION(S).

9. MARK, INDENT MOLD OR EMBOSS CHARACTERS SHOWN IN 1/16 MINIMUM HIGH CHAR SHOWN.
   - A. MARKING SHALL BE ACCOMPLISHED USING A CONTRASTING COLOR OF ITEM 50
   - (B) B. INDENT MOLDED OR EMBOSSED CHARACTERS SHALL HAVE A .010 MAX. DEPTH ABOVE SURFACE DATUM [-B-] AS APPLICABLE.
   - C. MARKINGS SHALL BE LOCATED WITHIN 1/8 INCH ADJACENT TO LEAD.

10. MARK "30003-2606038" AND REVISION LETTER TO WHICH PART IS MANUFACTURED CHARACTERS, IN POSITION SHOWN, USING A CONTRASTING COLOR OF ITEM 50 .

11. SEE NOTE 3 BEFORE INSERTING MODULE INTO TEST CIRCUIT.

(B) 12. MODULE OPERATION DURING LIFE TEST SHALL BE IN ACCORDANCE WITH FIGURE 2

13. FOR TEST 7 ONLY, PHASE LOCK THE SIGNAL AT PIN 3 WITH THE SIGNAL AT PIN PIN 3 SIGNAL 45 ± 5 DEGREES AND TAKE MEASUREMENT.

14. BANDWIDTH IS MEASURED AROUND CENTER FREQUENCY.

MICROFILM LEGIBILITY IS THE BEST POSSIBLE FROM THE ORIGINAL REPORT QUALITY

Copy available to DDC does not permit fully legible reproduction

ITEM NO.	QTY REQD	CODE IDENT	PART NO. OR IDENTIFYING NO.	NOMENCLATURE OR DESCRIPTION	SPECIFICATION	NOTE	
56	AR		2602187-2	INSULATOR		SEE NOTE 4A(2)	
55	AR		2602187-4	INSULATOR		SEE NOTE 4A(4)	
54	AR		2602187-5	INSULATOR		SEE NOTE 4A(3)	
53	1		2602180-370	CAPACITOR			C31.
52	AR		AWG NO 20	INSULATION SLEEVING	MIL-I-22129	(COLOR OPT.)	
51	AR		CLEAR	LACQUER	TT-L-26		
50	AR		SEE NOTES 9A AND 10	INK, MARKING	TT-I-558		
49	3		2602191-1	MICROELECTRONIC DEVICE			Z301
48	AR	13675	VENS-100	CONFORMAL COATING			
47	1		2606046-54	RESISTOR			R337
46	AR		2602199	MOLDING COMPOUND			
(B) 45	9		2596349-1	PAD, TRANSISTOR		NOTE 4D	
44	3		2596347	PAD, TRANSISTOR		NOTE 4D	
43	AR		TYPE N-3 .0250 ± .0020	WIRE	MIL-STD-1276		
42	1		CK12BX150M	CAPACITOR	MIL-C-11015/20		C322
41	1		JANTXIN963B	SEMICONDUCTOR DEVICE	MIL-S-19500/117		VR30

E	B	B	E
D	B	B	D
C	B	B	B
B	B	B	B
A	A	A	—
SHEET NO.1	SHEET NO.2	SHEET NO.3	SHEET NO.4
REVISION STATUS OF SHEETS			

REVISIONS				
ZONE	LTR	DESCRIPTION	DATE	APPROVED
		REPLACES 2605184		
	A_4	13785, 4-27-71	8-11-71	NK
	B_9	13832, 7-13-71	8-11-71	NK
	C_2	14638, 6-30-71	8-31-71	NK
	D_1	13883, 8-13-71	8-31-71	NK
	E	14679, 10-29-71	1-19-72	NK

SHALL BE

ATUM -B- SHALL BE

DATUM -B- SHALL NOT
B- OVER .010 MAX.

CITOR, AS APPLICABLE.

ON PART.
REFIX THE PARTIAL

ACTERS, IN POSITION

COVERED WITH ITEM 51.
OR HEIGHT, BELOW OR

IN 3/32 MINIMUM HIGH
AND COVER WITH ITEM 51.

2, SHEET 4, TEST 6.
N 13. PHASE SHIFT THE

Z302, Z303

REFERENCE DESIGNATION

ITEM NO.	QTY REQD	CODE IDENT	PART NO. OR IDENTIFYING NO.	NOMENCLATURE OR DESCRIPTION	SPECIFICATION	NOTE	REFERENCE DESIGNATION
40	2		JAN1N458	SEMICONDUCTOR DEVICE	MIL-S-19500/193		CR301, CR302
39	2		JANTX2N2432	SEMICONDUCTOR DEVICE	MIL-S-19500/313		Q303, Q306
38	2		JANTX2N2946A	SEMICONDUCTOR DEVICE	MIL-S-19500/382		Q304, Q305
37	3		JANTX2N2907A	SEMICONDUCTOR DEVICE	MIL-S-19500/291		Q302, Q307, Q309
36	2		JANTX2N2222A	SEMICONDUCTOR DEVICE	MIL-S-19500/255		Q301, Q308
35	2		2606046-13	RESISTOR			R332, R333
(A) 34	6		CSR13G105KM	CAPACITOR	MIL-C-39003/1		C315, C313, C314, C316, C317 C301
(B) 33	1		2602180-368	CAPACITOR			C309
32	1		2602180-364	CAPACITOR			C323
(C) 31	1		CSR13E225KM	CAPACITOR	MIL-C-39003/1		C303
30	1		CK14BR154K	CAPACITOR	MIL-C-11015/20		C308
(A) 29	1		CK12BX471M	CAPACITOR	MIL-C-11015/20		C321
(B) 28	2		CK12BX101M	CAPACITOR	MIL-C-11015/20		C318, C319
(D) 27	2		CK13BX223M	CAPACITOR	MIL-C-11015/20		C305, C306
26	3		CK12BX103M	CAPACITOR	MIL-C-11015/20		C302, C307, C311
25	1		CSR13F685KM	CAPACITOR	MIL-C-39003/1		C304
24	1		2602180-672	CAPACITOR			C310
(B) 23							
22	3		RCR07G152JS	RESISTOR	MIL-R-39008/1		R334, R335, R336
21	2		2606046-14	RESISTOR			R303, R312
20	2		2606046-10	RESISTOR			R308, R309
19	1		2606046-60	RESISTOR			R327
(A) 18	1		2606046-59	RESISTOR			R320
17	1		RCR07G511JS	RESISTOR	MIL-R-39008/1		R304
16	1		RCR07G104JS	RESISTOR	MIL-R-39008/1		R316
15	9		RCR07G103JS	RESISTOR	MIL-R-39008/1		R307,R310,R317,R318,R321, R322,R325,R326,R331
14	1		RCR07G562JS	RESISTOR	MIL-R-39008/1		R338
(B) 13	2		2606046-40	RESISTOR			R328,R329
(C) 12	1		2606046-53	RESISTOR			R319
11	1		2606046-32	RESISTOR			R330
10	2		RCR07G102JS	RESISTOR	MIL-R-39008/1		R311, R314
9	2		RCR07G100JS	RESISTOR	MIL-R-39008/1		R313, R315
8	1		RCR20G202JM	RESISTOR	MIL-R-39008/2		R305
7	2		2606046-52	RESISTOR			R302, R306
6	2		2606046-57	RESISTOR			R323, R324
5	1		2606046-20	RESISTOR			R301
(B) 4							
3	AR		2601040	PIN, HEADER			
2	1		2606040	PRINTED CIRCUIT BOARD			A3B
1	1		2606039	PRINTED CIRCUIT BOARD			A3A

2606038

NEXT ASSY	USED ON
2606050	DL2606050

APPLICATION

UNLESS OTHERWISE SPECIFIED
DIMENSIONS ARE IN INCHES
TOLERANCES
ANGLES ±
FRACTIONS ±
DECIMALS ±
PART SHALL BE FREE OF BURRS
BROKEN EDGES — MAX
FILLETS — R MAX
SURFACE ROUGHNESS

DO NOT SCALE THIS DRAWING
INTERPRET DRAWING IN ACCORDANCE WITH MIL STD 1000

NAVAL WEAPONS CENTER
CHINA LAKE, CALIF. 93555

5512		1-7-71
5516		
5523		4-27-71
5551	NK	4-27-71
5571		4-27-71
55032		4-27-71

APPROVED FOR NAVAIR

DEPARTMENT OF THE NAVY
NAVAL AIR SYSTEMS COMMAND
WASHINGTON, D.C. 20360

NETWORK, DETECTOR AND SYNCHRONOUS FILTER A3

SIZE	CODE IDENT NO	NAVAIR DWG NO.
D	30003	2606038

SCALE NONE | UNIT WT | SHEET 1 OF 4

032

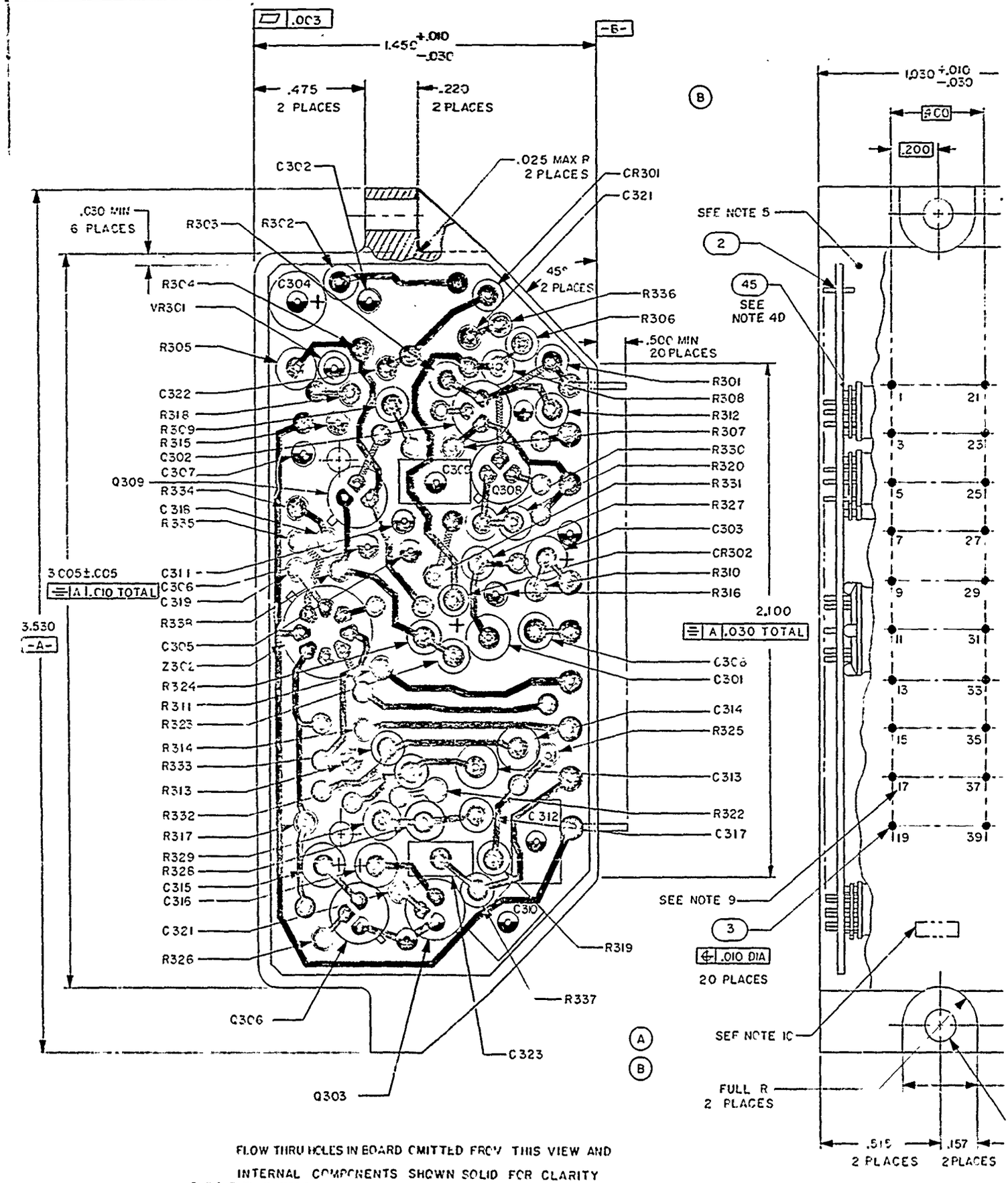

FLOW THRU HOLES IN BOARD OMITTED FROM THIS VIEW AND INTERNAL COMPONENTS SHOWN SOLID FOR CLARITY

MICROFILM LEGIBILITY IS THE BEST POSSIBLE FROM THE ORIGINAL REPORT QUALITY

A L AXIAL LEAD COMPONENTS OMITTED FROM THIS VIEW

REVISIONS				
ZONE	LTR	DESCRIPTION	DATE	APPROVED
		REPLACES 2605184		
	A2	13785, 4-27-71	8-11-71	JK
	B	13832, 7-13-71	8-11-71	JK

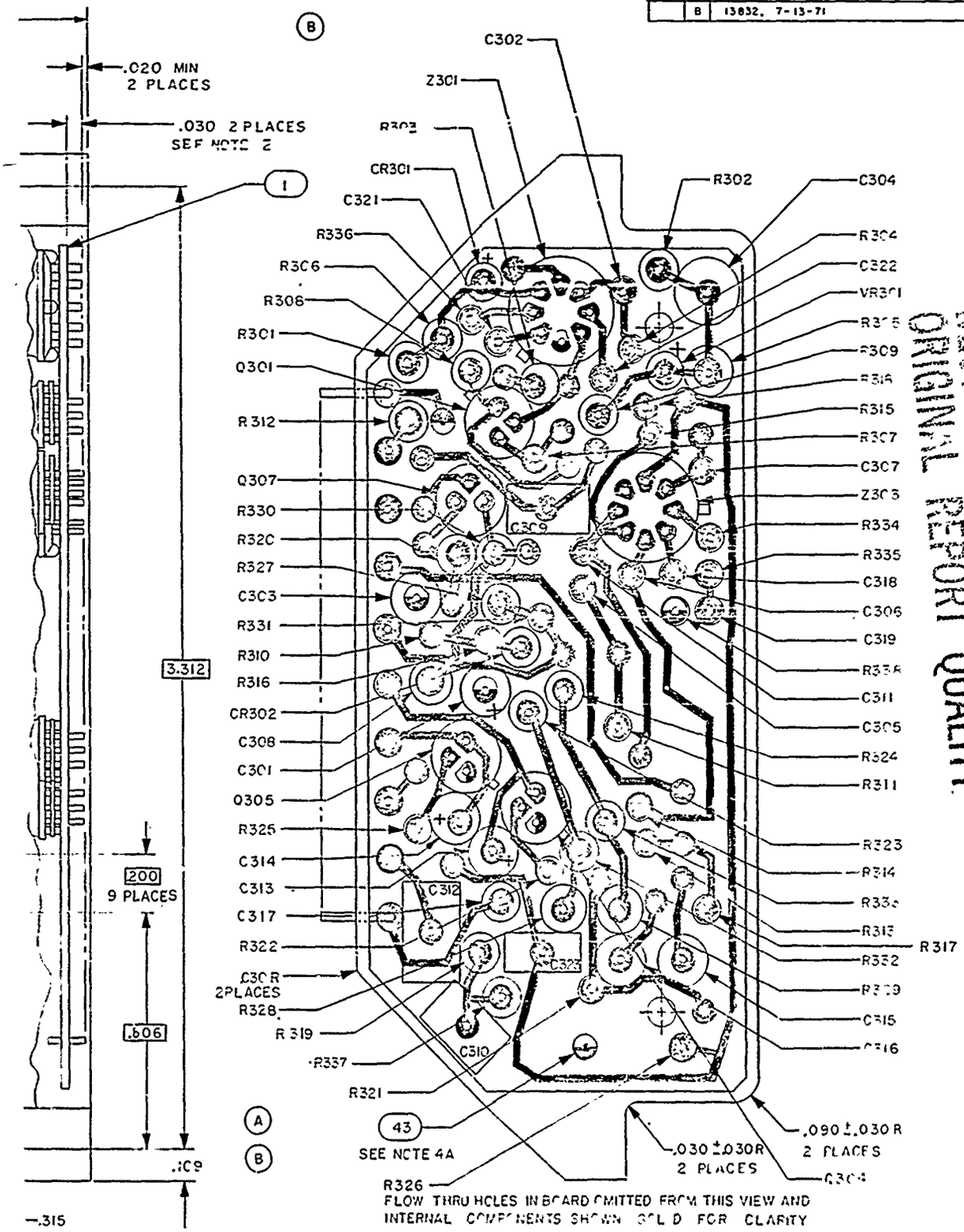

MICROFILM LEGIBILITY IS THE BEST POSSIBLE FROM THE ORIGINAL REPORT QUALITY

2606050	DL2606050		
NEXT ASSY	USED ON		
APPLICATION			

UNLESS OTHERWISE SPECIFIED
DIMENSIONS ARE IN INCHES
TOLERANCES
ANGLES ± 2°
FRACTIONS ±
DECIMALS ± .010
PART SHALL BE FREE OF BURRS
BROKEN EDGES MAX
FILLETS R MAX.
SURFACE ROUGHNESS
DO NOT SCALE THIS DRAWING
INTERPRET DRAWING IN ACCORDANCE WITH MIL STD 1000

NAVAL WEAPONS CENTER
CHINA LAKE, CALIF. 93555

5512		
5513		
5523		8-27-71
5551		8-26-71
5571		4-27-71
55032		4-27-71

APPROVED FOR NAVAIR 27 APR 1971

DEPARTMENT OF THE NAVY
NAVAL AIR SYSTEMS COMMAND
WASHINGTON, D.C. 20360

NETWORK, DETECTOR AND SYNCHRONOUS FILTER A3

SIZE	CODE IDENT NO.	NAVAIR DWG NO
D	30003	

SCALE 2 / 1 | UNIT WT | SHEET 2

NOTE: JUMPER WIRES, FOR CLARITY

034

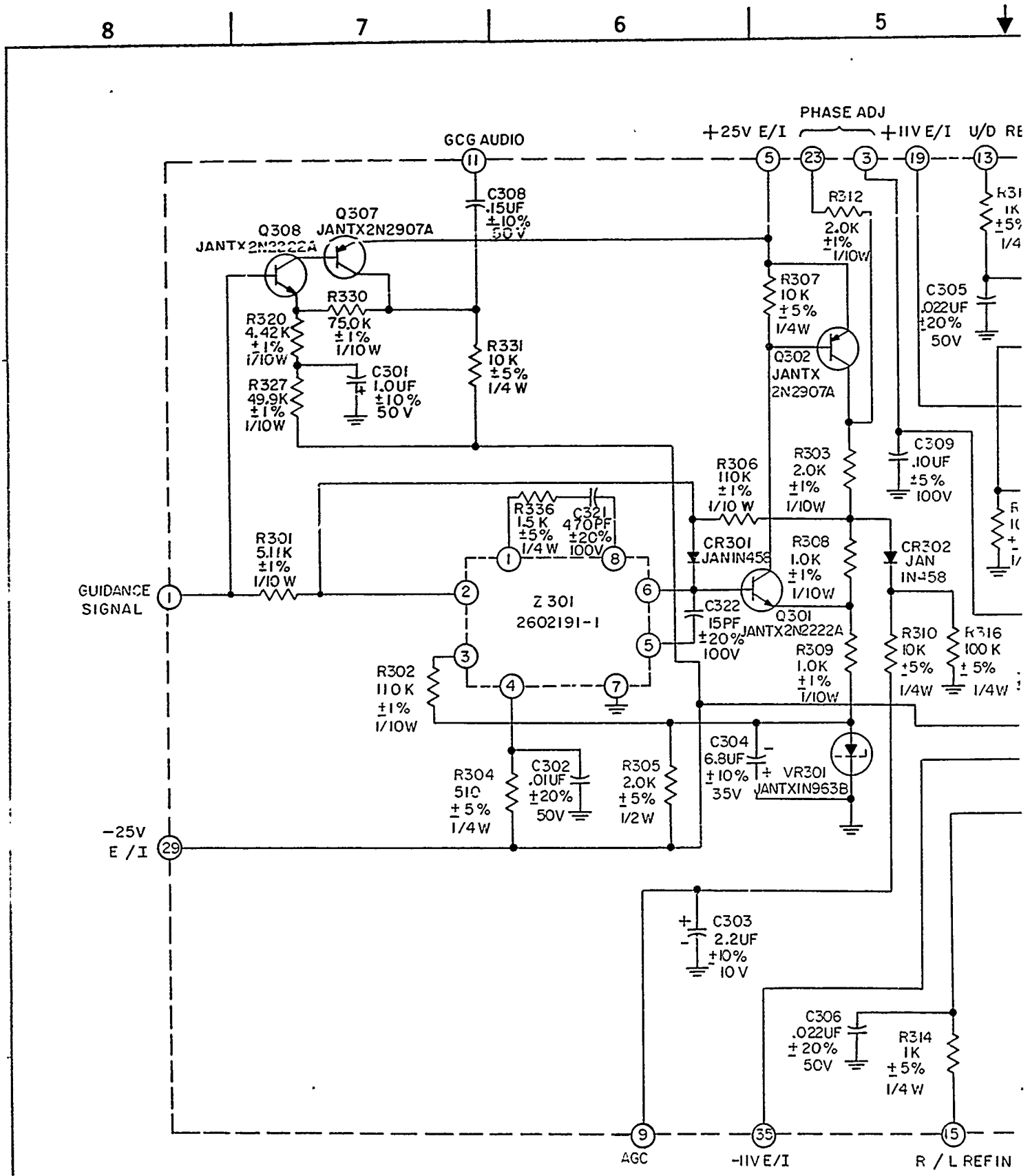
8
7
6
5
PHASE ADJ
+25V E/I
+11V E/I
U/D RE
GCG AUDIO
11
5
23
3
19
13
C308
.15UF
±10%
50V
Q307
JANTX2N2907A
Q308
JANTX2N2222A
R330
75.0K
±1%
1/10W
R320
4.42K
±1%
1/10W
R327
49.9K
±1%
1/10W
C301
1.0UF
±10%
50V
R331
10K
±5%
1/4W
R312
2.0K
±1%
1/10W
R307
10K
±5%
1/4W
Q302
JANTX
2N2907A
C305
.022UF
±20%
50V
C309
.10UF
±5%
100V
R303
2.0K
±1%
1/10W
R306
110K
±1%
1/10W
R336
1.5K
±5%
1/4W
C321
470PF
±20%
100V
R301
5.11K
±1%
1/10W
CR301
JAN1N458
R308
1.0K
±1%
1/10W
CR302
JAN
1N458
GUIDANCE
SIGNAL
Z 301
2602191-1
C322
15PF
±20%
100V
Q301
JANTX2N2222A
R309
1.0K
±1%
1/10W
R310
10K
±5%
1/4W
R316
100K
±5%
1/4W
R302
110K
±1%
1/10W
C304
6.8UF
±10%
35V
VR301
JANTX1N963B
R304
510
±5%
1/4W
C302
.01UF
±20%
50V
R305
2.0K
±5%
1/2W
-25V
E/I
C303
2.2UF
±10%
10V
C306
.022UF
±20%
50V
R314
1K
±5%
1/4W
9
35
15
AGC
-11V E/I
R/L REF IN

REVISIONS				
ZONE	LTR	DESCRIPTION	DATE	APPROVED
		REPLACES 2605184		
	A	13785, 4-27-71	8-11-71	MK
	B	13832, 7-13-71	8-11-71	MK

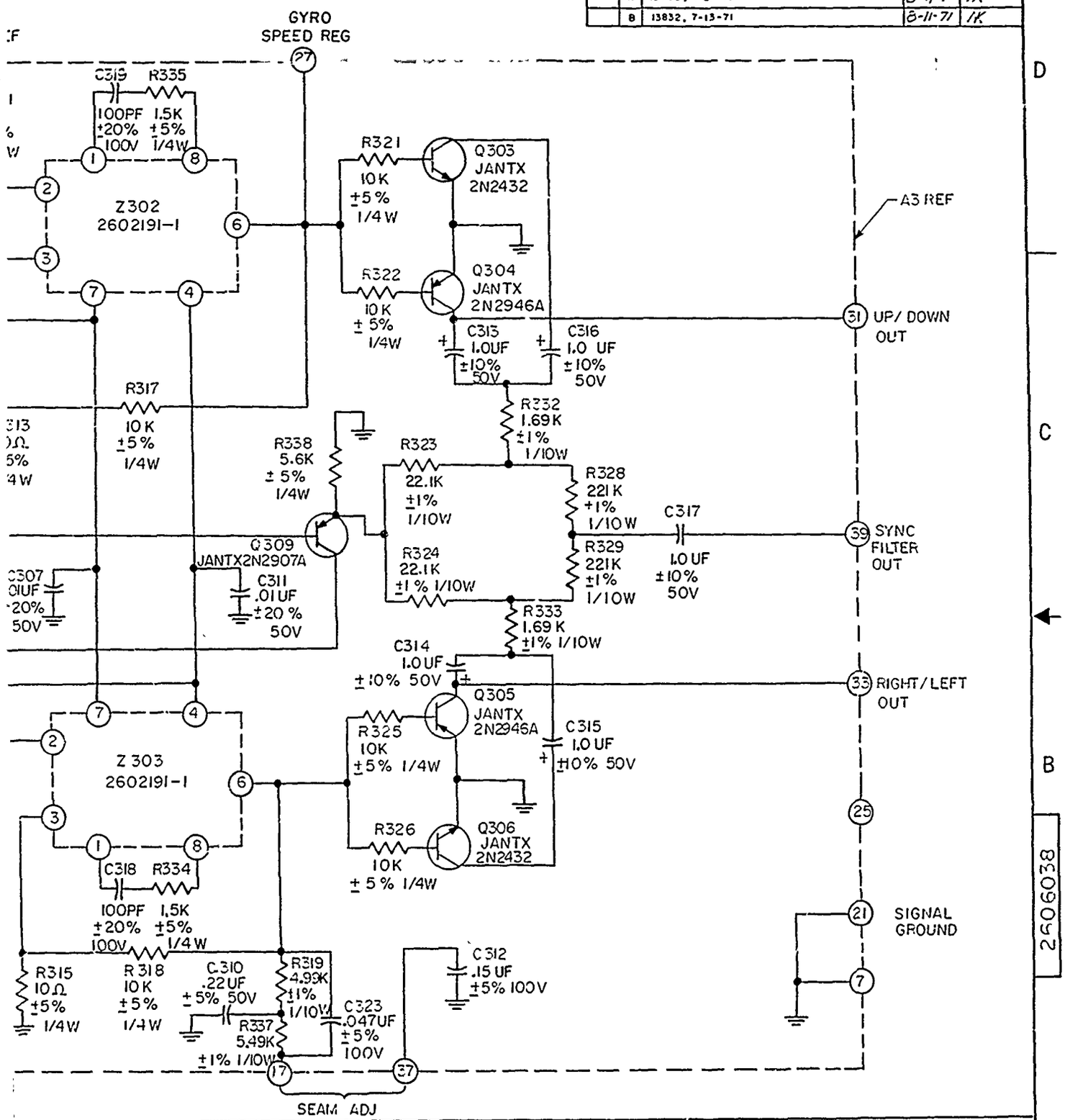

2606050	DL2606050	UNLESS OTHERWISE SPECIFIED	NAVAL WEAPONS CENTER CHINA LAKE, CALIF. 93555	DEPARTMENT OF THE NAVY NAVAL AIR SYSTEMS COMMAND WASHINGTON, D.C. 20360
NEXT ASSY	USED ON	DIMENSIONS ARE IN INCHES; TOLERANCES: ANGLES ±, FRACTIONS ±, DECIMALS ±; PART SHALL BE FREE OF BURRS; BROKEN EDGES MAX; FILLETS R MAX; SURFACE ROUGHNESS	5512	NETWORK DETECTOR AND SYNCRONOUS FILTER A3
APPLICATION		DO NOT SCALE THIS DRAWING	5516	
		INTERPRET DRAWING IN ACCORDANCE WITH MIL STD 1000	5523	
			5551	
			5571	
			55032	
			APPROVED FOR NAVAIR	SIZE D; CODE IDENT NO. 30003; NAVAIR DWG NO. 2606038
				SCALE NONE; UNIT WT; SHEET 3

2606038

036

MICROFILM LEGIBILITY IS THE BEST POSSIBLE FROM THE ORIGINAL REPORT QUALITY

TABLE I (SEE NOTE 3A)				
TEST NO.	PARAMETER	BETWEEN TERMINAL	REQUIREMENTS	
			PRE-ENVIRONMENTAL	POST-ENVIRONMENTAL
1	RESISTANCE	7 AND 21	.1 OHM MAX	.2 OHM MAX

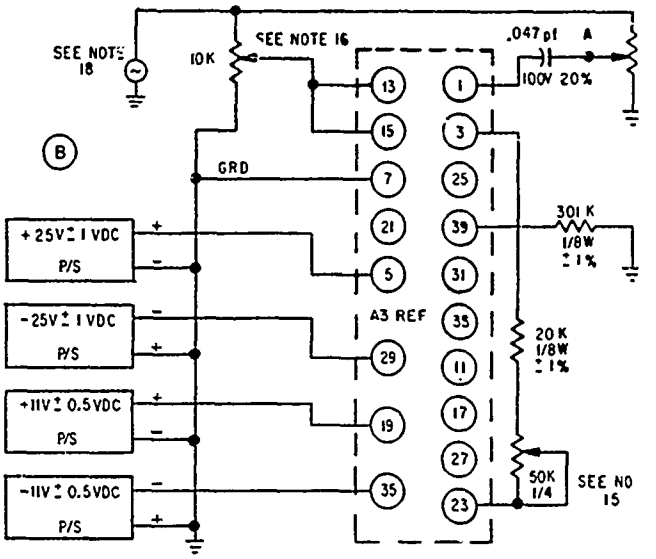

LIFE TEST CIRCUIT
FIGURE 2

B B

TABLE II (SEE NOTE 3B)								
TEST NO.	PARAMETER	TERM.	REQUIREMENTS		POSITION			REMARKS
			PRE-ENVIRONMENTAL	POST-ENVIRONMENTAL	S1	S2	S3	
1	SUPPLY CURRENT	5	10 MADC MAX. ABS	15 MADC MAX. ABS	2	1	1	
2	SUPPLY CURRENT	29	30 MADC MAX. ABS	35 MADC MAX. ABS	2	1	1	
3	SUPPLY CURRENT	19	10 MADC MAX. ABS	15 MADC MAX. ABS	2	1	1	
4	SUPPLY CURRENT	35	10 MADC MAX. ABS	15 MADC MAX. ABS	2	1	1	
5	AUD. AMPL. OUTPUT	11	8.0 ± .75VRMS	8.0 ± 1.0 VRMS	2	2	1	APPLY 500 ± 5 MV RMS TO PIN 1. SET FREQ. TO F_2 ± 0.8%.
6	PHASE ADJUSTMENT DIFFERENCE	BETWEEN 3 & 1	14 ± 5 K Ω	14 ± 5 K Ω	2	2	1	ADJUST FREQ. AT PIN 1 TO F_1 ± .8% AND THE VOLTAGE LEVEL TO 250 ± 5 MVRMS, THEN SET THE RESISTANCE BETWEEN PINS 3 AND 23 FOR A PHASE READING OF 135±3°
6A	DET. AMPL. OUTPUT	3	5.75 ± 3.0 VRMS	5.75 ± 3.0 VRMS	2	1	1	SAME CONDITIONS AS TEST 6.
7	SYNC FILTER OUTPUT	39	.43 ± .05 VRMS	.43 ± .07 VRMS	2	3	1	ADJUST VOLTAGE TO OBTAIN 1.42 ± .02 VRMS AT F_1 ± .8% AT PIN 3 (SEE NOTE 13)
8	SYNC FILTER BANDWIDTH	39	9 ± 2 Hz	9 ± 3 Hz	2	3	1	ADJUST FREQUENCY AT PIN 3 TO OBTAIN A 3db BANDWIDTH AT PIN 39. SEE NOTE 14.
9	R/L OUTPUT	33	.75 ± .10 VRMS	.75 ± .20 VRMS	2	3	2	SET INPUT PIN 3 TO 1.0 ± 0.2 VRMS AT FREQ. F_1 ± 0.8%.
10	U/D OUTPUT	31	.75 ± .10 VRMS	.75 ± .20 VRMS	2	3	2	
11	R/L SWITCHING SYMMETRY	17	.2 MSEC MAX.	.4 MSEC MAX	2	1	1	MEASURE EACH HALF CYCLE OF THE SWITCHING WAVEFORM AND DETERMINE THE TIME DIFFERENCE BETWEEN THE TWO.
12	U/D SWITCHING SYMMETRY	27	.2 MSEC MAX	.4 MSEC MAX	2	1	1	MEASURE EACH HALF CYCLE OF THE SWITCHING WAVEFORM AND DETERMINE THE TIME DIFFERENCE BETWEEN THE TWO.
13	SYNC FILTER NOISE	39	10 MVRMS MAX	15 MVRMS MAX	2	1	1	MEASURE SYNC FILTER NOISE
14	SEAM CIRCUIT VOLTAGE	37	2.35±.15 VRMS	2.35±.25 VRMS	2	1	1	MEASURE SEAM VOLTAGE.
15	SEAM CIRCUIT PHASE	BETWEEN 15 & 37	120 ± 5°	120 ± 6°	2	1	1	PIN 15 SHALL BE REFERENCE VOLTAGE FOR PHASE READING.

B

REVISIONS				
ZONE	LTR	DESCRIPTION	DATE	APPROVED
		REPLACES 2605184		
	B_5	13832, 7-13-71	8-11-71	NK
	D_1	13883, 8-13-71	8-31-71	NK
	E	14679, 10-29-71	1-19-72	JK

MICROFILM LEGIBILITY IS THE BEST POSSIBLE FROM THE ORIGINAL REPORT QUALITY

SEE NOTE 17 (D)

(B)

15. SET RESISTANCE FROM PIN 3 TO PIN 23 FOR 40K ± 5%.
16. SET RESISTANCE FOR 1.0 ± .1 VRMS AT PINS 13 AND 15.
17. SET RESISTANCE FOR 1.40 ± .14 VRMS AT POINT A.
18. SET VOLTAGE TO 5.0 ± .5 VRMS AT f_1 ± 2%. Z OUT ≤ 600 Ω.

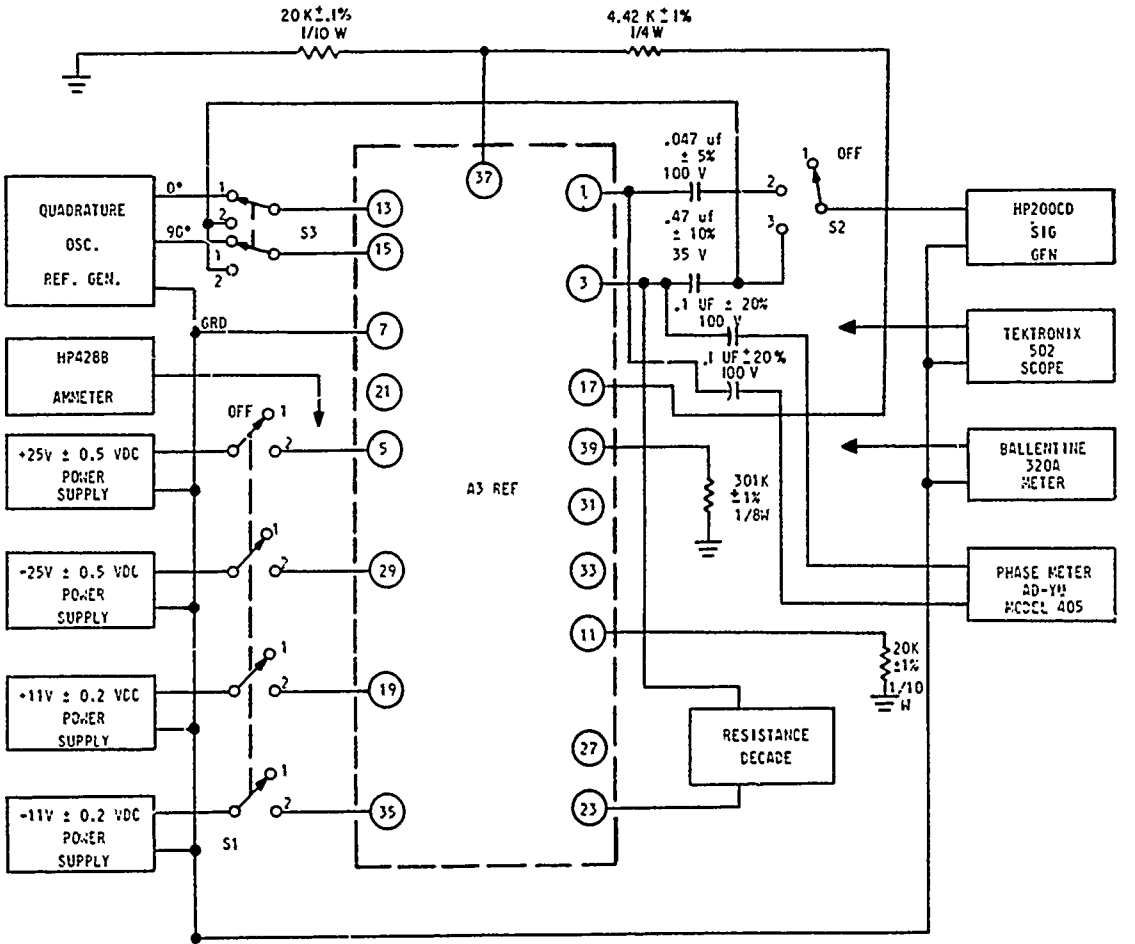

TEST CIRCUIT
FIGURE 1

2606038

2606050	DL2606050		
NEXT ASSY	USED ON		
APPLICATION			

UNLESS OTHERWISE SPECIFIED
DIMENSIONS ARE IN INCHES
TOLERANCES
ANGLES ± —
FRACTIONS ± —
DECIMALS ± —
PART SHALL BE FREE OF BURRS
BROKEN EDGES — MAX
FILLETS — R MAX —
SURFACE ROUGHNESS
DO NOT SCALE THIS DRAWING
INTERPRET DRAWING IN ACCORDANCE WITH MIL STD 1000

NAVAL WEAPONS CENTER CHINA LAKE, CALIF. 93555

5512		
5516	—	—
5523		11-27-71
5551	NK	11-27-71
5571		
55032		11-27-71

APPROVED FOR NAVAIR 27 Nov 1971

DEPARTMENT OF THE NAVY
NAVAL AIR SYSTEMS COMMAND
WASHINGTON, D.C. 20360

NETWORK DETECTOR AND SYNCHRONOUS FILTER A3

SIZE	CODE IDENT NO	
D	30003	2606038
SCALE NONE	UNIT WT NA	SHEET 4

038