UNCLASSIFIED

AD NUMBER
AD894686
LIMITATION CHANGES
TO: **Approved for public release; distribution is unlimited.**
FROM: **Distribution authorized to U.S. Gov't. agencies only; Test and Evaluation; APR 1972. Other requests shall be referred to Office of Naval Research, Washington, DC 20360.**
AUTHORITY
ONR ltr, 18 Aug 1972

THIS PAGE IS UNCLASSIFIED

HPC 72-147

ITEM A002

AD894686

AD No. ___
DDC FILE COPY

MONSANTO/WASHINGTON UNIVERSITY
ONR/ARPA ASSOCIATION

DEVELOPMENT OF A METHOD OF CONCENTRATING HIGH MODULUS, OPEN-END FIBERS INTO A YARN*

By

MYRNE R. RILEY

DDC
RECEIVED
JUN 5 1972
A

PROGRAM MANAGER
ROLF BUCHDAHL

[redacted]

MONSANTO RESEARCH CORPORATION
A SUBSIDIARY OF MONSANTO COMPANY
800 N. LINDBERGH BOULEVARD ST. LOUIS, MISSOURI 63166

The views and conclusions contained in this document are those of the authors and should not be interpreted as necessarily representing the official policies, either expressed or implied, of the Advanced Research Projects Agency or the U. S. Government.

FOR OFFICIAL USE ONLY

ACCESSION for
NTIS WHITE SECTION ☐
DDC BUFF SECTION ☐
UNANNOUNCED ☐
JUSTIFICATION .....
BY .....
DISTRIBUTION/AVAILABILITY CODES
DIST. AVAIL. and/or SPECIAL
B

14

HPC-72-147

ITEM A002

6 DEVELOPMENT OF A METHOD OF CONCENTRATING HIGH MODULUS, OPEN-END FIBERS INTO A YARN

By

10 MYRNE R. RILEY

11 APR[redacted]72

76p.

MONSANTO/WASHINGTON UNIVERSITY ASSOCIATION
HIGH PERFORMANCE COMPOSITES PROGRAM
SPONSORED BY ONR AND ARPA
15 [redacted] N00014-67-C-0218, ARPA ORDER-876
ROLF BUCHDAHL, PROGRAM MANAGER
16 NR-356-464
MONSANTO RESEARCH CORPORATION
800 NORTH LINDBERGH BOULEVARD
ST. LOUIS, MISSOURI 63166

AD-701 035

FOREWORD

The researc herein was conducted by the staff of the Monsanto/Washington University Association under the sponsorship of the Advanced Research Projects Agency, Department of Defense, through a contract with the Office of Naval Research, N00014-67-C-0218 (formerly N00014-66-C-0045), ARPA Order No. 876, ONR contract authority NR 356-484/4-13-66, entitled "Development of High Performance Composites."

The prime contractor is Monsanto Research Corporation. The Program Manager is Dr. Rolf Buchdahl (phone 314-694-4721).

The contract is funded for $7,000,000, and expires 30 June 1974.

DEVELOPMENT OF A METHOD OF CONCENTRATING HIGH MODULUS, OPEN-END FIBERS INTO A YARN*

Myrne R. Riley,†
Monsanto Company
St. Louis, Missouri

ABSTRACT

A single slurry vortex spinning apparatus was developed to form a multi-component yarn. The design of the apparatus was based on developments in the textile industry to produce yarn by means of open-end spinning. A slurry of dispersed fibers was transferred to the spinning zone of the device, and as it passed through a rapidly rotating tube, the hydrodynamic action twisted the fibers into a yarn.

The device was demonstrated with uncrimped textile staple, and integral mixtures of high modulus fibers with the lower modulus synthetic fibers. The yarn issuing from the rotating tube was snubbed by a roller, washed free of the suspending liquid, and collected on a take-up drum. A summary of open-end spinning systems described in the literature is included. Also, the equations required to describe the hydrodynamic process are presented.

*Contribution HPC 72-147 from the Monsanto/Washington University Association sponsored by the Advanced Projects Research Agency, Department of Defense, Under Office of Naval Research Contract N00014-67-C-0218.

†Present address: University of Missouri, Rolla, Missouri

INTRODUCTION

Materials which exhibit very high strength characteristics and are potential reinforcements for composites are the small diameter (less than one micron) single crystalline whiskers (1,2). Whiskers and chopped fibers, such as glass or graphite, are difficult to handle due to their size and high modulus. A technological processing breakthrough is required for these materials to be used in composites at a high level of efficiency. The purpose of the work reported here is to survey the state of the art of processes capable of handling open-ended fibers and to develop a process capable of concentrating high-modulus, open-end fibers into a yarn with a high degree of alignment along the yarn's axis. The yarn was selected as a reasonable form for the lay-up, impregnation and molding of an aligned short fiber composite. Conventional textile processes cannot be used to process the fibers into a convenient form of handling (3).

In the textile industry there are research and development efforts directed toward producing a textile yarn by means of open-end spinning, often referred to as break spinning. There are four phases of the open-end spinning process each having a direct influence on the characteristics of the yarn produced. They are as follows: (i) Separating the fibers from large entangled groups or a sliver into individual fibers or smaller groups. For high-modulus fibers, this phase involves disentangling the fibers from the meshed

network created during production and dispersing them uniformly in some medium; (ii) Transferring the fibers to the spinning zone. This phase may involve the mechanical transfer of the components to a collecting zone where spinning occurs, or a transfer to this zone by hydrodynamic forces acting on the individual components suspended in a fluid, either gas or liquid; (iii) Condensing the fibers into a narrow zone either by mechanical or electrostatic means or by physical constrictions within a boundary; (iv) Assembling and spinning the fibers into yarn form. This assembling may be carried out in the order fibers are condensed, or in a new random distribution. A seed yarn is not required when the fibers are assembled and spun in the order as condensed, but is needed for a new random distribution.

The combination of the various possibilities included in each of the four phases has been categorized by Catling (4) into four groups of open-end spinning systems.

OPEN-END SPINNING SYSTEMS

The first group (I) of spinning systems is characterized by a transfer of fibers in a fluid to the spinning zone by means of the hydrodynamic action on the suspended fibers. The fluid vortex at the spinning zone twists the fibers together into a yarn. The transfer of fibers to the spinning zone is normally accomplished by flow. The behavior of flexible fibers in various flow fields has been investigated by Mason et al. (5-7). For laminar flow, the fibers do not totally align parallel to a tube axis when positioned some distance from the tube center. The fiber coils end-over-end and

in doing so slowly migrates to the tube's axis. Along the axis, the fibers maintain a fair degree of alignment. This total process of migration and alignment occurs only if the flow is laminar (Poiseuille flow) and the tube is long. A turbulent flow tends to disorient the fibers and causes a flattened velocity profile. Migration of fibers does not occur systematically with a flattened profile. The behavior of flexible fibers in a shear field was studied by Edberg (8). He investigated the drag produced by a single fiber in a flowing stream of air in a circular tube, and also the behavior of fibers in laminar and turbulent air flow.

Examples of processes for open-end spinning meeting the group I description are an air tube spinner (9), a water tube spinner (10), a tangential jet vortex spinner (3) and others (11). Each is characterized by a hydrodynamic transfer of the fibers to a fluid vortex which imparts twist to the fibers thus forming a yarn. A schematic of an air vortex spinner is shown in Figure 1.

For the production of a textile yarn, air is the best medium. However, air is not a suitable fluid for spinning high-modulus fibers (12,13). Supplementary twisters such as those developed by Gotzfried (14) and Burkhardt (15) are usually needed for group I processes. Conventional feeding devices or licker-in type cylinders (16,17) may also be used for supplying textile fibers.

In the second group (II) of devices, the fibers are dispersed in a fluid medium and condensed along a narrow zone; twist is normally imparted by means of a mechanical rotating element. Examples of

processes of this type are Metcalf's needle twisting process (18), spinning chambers (19-21) and others (22-26). Typical of the mechanical twisting, open-end spinning process is the Pavek basket spinner (27-29) shown in Figure 2. Fibers are fed from feed rollers through a tube into a rotating cone with needles pressing lightly against a central leader needle. The yarn forms along the leader needle and is withdrawn form the apex of the rotating cone.

Other devices in this group use electrostatic or fluid dynamic forces to control the fibers but mechanical twist is still the common feature. Patents for electrostatic processes were issued to Oglesly (30) and to the Central' ny Nauchno-Issledovatelsky Institute (31). Details of the performance of processes in this group are described by Krause (32) in addition to Catling (4).

The processes of the third group (III) differ from groups I and II since individual separation of the fibers is not required. Instead, tufts of fibers are withdrawn from a roving and successively overlapped onto a rotating collection drum. Twist is induced by the mechanical rotation of the drum as the lead tuft is withdrawn. An example is the Barker spinner (33,34) as illustrated in Figure 3. Other developments in this group have been made by the Southern Region Research Laboratories of the U. S. Department of Agriculture (35).

Processes from the fourth group (IV) are based on the collection of individual fibers on a rotating surface such as a drum or "pot", and the formation of a yarn by introduction of a seed yarn and the take-up of the fibers from the collecting surface as they twist onto the seed yarn. Early devices used the external surface of a

drum and were lled flyer-uptwister break spinners (36,37). A more practical design is the collection of fibers on the inside of a drum rotating at high speed. In Berthelsen's process (38), illustrated in Figure 4, the fibers are collected in this way using a rotating pot. The yarn is produced by uptwisting the fibers on a seed yarn and twist is imparted mechanically by the rotation of the pot. Processes in this category are referred to as "pot spinners". Patents for several pot spinners have issued (39-45) and are described in the literature. At the 53rd Conference of the Textile Institute (46), open-end spinning was reviewed and evaluated. All four groups of spinning systems were described as potential textile processes (47). Open-end spun yarn is a bulkier and weaker yarn than standard,ring-spun yarn, primarily because the degree of the alignment is poor. However, uniformity, neps, and thin place counts are superior.

Interest has centered primarily on the group IV "pot spinning" devices. A commercial unit has been developed in Czechoslovakia (48-49) and is illustrated in Figure 5. (It is made by Investa, Model BD200, and supplied in the U. S. by Stellamcor, Inc.) Russian cotton, 67% cotton/33% viscose rayon, and 67% polyester/33% viscose rayon, have been successfully spun on the unit. Other machines are described in the literature (50-52). In addition, other reviews and references on open-end spinning are available (53-58).

To date the spinning of crimped, stiff fibers has been unsuccessful, especially with the fluid vortex units of group I. Although liquids were not considered as a fluid for commercial open-end spinning of textile yarns, they are desirable when extending the application of vortex spinning to stiff fibers. With high modulus fibers, or a mixture of high and low modulus fibers, larger hydrodynamic forces are required for twisting. The processes represented by groups II, III and IV require low modulus fibers for the successful formation of yarn. Accordingly, group I processes involving a fluid vortex were investigated here to determine the applicability of spinning a yarn with stiff fibers and/or fibers with little or no crimp.

ANALYSIS OF A ROTATING TUBE VORTEX

The analysis of the following fluid system relates to the process of spinning chopped fibers or whiskers into a continuous filament. There are two methods of forming a forced vortex, a control boundary and tangential jets. In order to twist long fibers into a yarn the vortex must have a rotation rate which varies along the axis of the yarn. In addition a laminar flow field is desirable to minimize disorienting effects caused by turbulent eddies. To meet these requirements a controlled boundary (rotating tube) is selected for forming the axial vortex gradient.

The circular tube is defined by radius R and axial coordinate z, extending to $\pm \infty$. The portion of the tube in the region $z > o$ rotates with an angular velocity ω, whereas the tube in the region $z < o$ is fixed, i.e., $\omega = o$. If a viscous fluid flows through the tube with a fully developed velocity profile v_z, i.e., Poiseuille flow, the variation of the vorticity along z and the significant parameters can be analyzed.

The system of equations describing the fluid motion is obtained from the general Navier-Stokes equations in cylindrical coordinates.

$\underline{r}$ $$\rho v_\theta{}^2/r = \frac{\partial P}{\partial r}$$

$\underline{\theta}$ $$\rho v_z \frac{\partial v_\theta}{\partial z} = \mu[\frac{\partial}{\partial r} (1/r \frac{\partial}{\partial r} (rv_\theta)] + \frac{\partial^2 v_\theta}{\partial z^2}$$

$\underline{z}$ $$\frac{\partial P}{\partial z} = \mu[1/r \frac{\partial}{\partial r} (r \frac{\partial v_z}{\partial r})]$$

If the pressure drop in the z-direction is assumed constant, i.e., $\frac{\partial P}{\partial z}$ = constant, the equation for the momentum change in the z-direction gives the velocity profile $v_z = v_{max}[1-(r/R)^2]$. The equation for the r-direction gives the pressure distribution as a function of r if v_θ is known. Therefore, the main objective is to determine v_θ.

The differential equation for v_θ is written as

$$\frac{\partial^2 v_\theta}{\partial r^2} + \frac{1}{r} \frac{\partial v_\theta}{\partial r} - \frac{v_\theta}{r^2} = 2k \frac{\partial v_\theta}{\partial z} - \frac{\partial^2 v_\theta}{\partial z^2} \qquad (1)$$

where

$k = \frac{\rho v_z}{2\mu}$

μ = absolute viscosity

$v_z = v_{max}[1 - (r/R)^2]$

ρ = density

The boundary conditions are as follows:

#1) $\frac{\partial v_z}{\partial z} = \text{constant}$

#2) $v_\theta = o \ @ \ r = o \qquad -\infty < z < \infty$

#3) $v_\theta = o \ @ \ r = R \qquad z < o$

#4) $v_\theta = \omega R \ @ \ r = R \qquad z > o$

#5) $v_\theta = \omega r \ @ \ z = \infty \qquad o < r < R$

#6) $v_\theta = o \ @ \ z = -\infty \qquad o < r < R$

The method of separation of variables can be used to reduce the problem to one of solving two ordinary differential equations.

If the solution to eq. 2 is assumed to be of the form

$$v_\theta = R(r)Z(z) \tag{2}$$

then, the following ordinary differential equations can be solved for R(r) and Z(z):

$$\frac{d^2R(r)}{dr^2} + \frac{1}{r}\frac{dR(r)}{dr} + \left(\alpha^2 - \frac{1}{r^2}\right)R(r) = o \tag{3}$$

$$\frac{d^2Z(z)}{dz^2} - 2k\frac{dZ(z)}{dz} - \alpha^2 Z(z) = o \tag{4}$$

Eq. 3 is Bessel's differential equation, and eq. 4 is Euler's equation, a second order differential equation with constant coefficients.

Using a transformation of variables, the solution of Bessel's equation is given as a combination of first ordered Bessel functions:

$$R(r) = k_{11} \cdot J_1(\alpha r) + k_{12}\, Y_1(\alpha r)$$

In order for v_θ to be finite at $r = o$, $R(r)$ must be finite at $r = o$. However, $Y_1(\alpha r) \longrightarrow -\infty$ as $r \longrightarrow o$. Therefore, $k_{12} = o$. Thus, the solution takes the form

$$J_1(\alpha r)\ Z(z)$$

The general solution of eq. 4 for $Z(z)$ is of the form

$$Z(z) = k_{21} \exp(a_1 z) + k_{22} \exp(a_2 z)$$

with

$$a_1 = k\ (1 + \sqrt{1 + (\alpha/k)^2}$$

$$a_2 = k\ (1 - \sqrt{1 + (\alpha/k)^2}$$

The expression of v_θ becomes

$$v_\theta = J_1(\alpha r)\ \{k_1 \exp(a_1 z) + k_2 \exp(a_2 z)\}$$

In order to continue, the solution must be broken into two parts, one for $z < o$ and the other for $z > o$. The matching conditions at $z = o$ require that v_θ and $\frac{\partial v_\theta}{\partial z}$ be continuous.

<u>Region of $z < o$</u>

In the region of the fixed tube, $z < o$, boundary condition #6 requiring that $v_\theta = o$ as $z \longrightarrow -\infty$ for all radii dictates that $k_2 = o$ for this region since $\exp(a_2 z) \longrightarrow \infty$ as $z \longrightarrow -\infty$. The expression for the velocity v_θ becomes

$$v_\theta \ (z < o) = k_1 J_1(\alpha r) \exp\ (a_1 z)$$

The constants k_1 and α are now determined from the boundary condition: $v_\theta = o$ at $r = R$ and $z < o$. This results in the following expression:

$$v_\theta(R, z < o) = k_1 J_1(\alpha R) \exp\ (a_1 z) = o$$

Since k_1 and $\exp\ (a_1 z)$ are not necessarily zero, then

$$J_1(\alpha R) = o.$$

Thus, α represents the positive roots of $J_1\ (\alpha R) = 0$. However, there are an infinite number of roots which satisfy this condition each contributing a solution to the original differential equation. The final solution for $v_\theta(r, z < o)$ is a linear combination of all possible solutions:

$$v_\theta(r, z < o) = \sum_{s=1}^{\infty} K_s J_1(\alpha_s r) \exp\ (a_1 z) \qquad z < o \qquad (5)$$

<u>Region of z > o</u>

In the region of the rotating tube, the partial differential equation for v_θ, eq. 1, must be transformed to eliminate the non-homogeneous boundary condition:

$$V_\theta = \omega R \qquad \text{at } r = R,\ o < z < \infty$$

Let

$$v_\theta(r, z) = W(r, z) + \phi(r)$$

Substitution into eq. 1 gives

$$\frac{\partial^2 W}{\partial r^2} + \frac{1}{r}\frac{\partial W}{\partial r} - \frac{W}{r^2} + \frac{\partial^2 \phi}{\partial r^2} + \frac{1}{r}\frac{\partial \phi}{\partial r} - \frac{\phi}{r^2} = 2k\frac{\partial W}{\partial z} - \frac{\partial^2 W}{\partial z^2} \qquad (6)$$

In order for this equation to be homogeneous,

$$\frac{\partial^2 \phi}{\partial r^2} + \frac{1}{r}\frac{\partial \phi}{\partial r} - \frac{\phi}{r^2} = o \qquad (7)$$

The solution for ϕ is of the form

$$\phi(r) = C_1 r + C_2 r^{-1} \qquad (8)$$

The boundary conditions

$$v_\theta(R, z > o) = \omega R$$

and

$$v_\theta(o, z > o) = o$$

transform to

$$v_\theta(R, z > o) = W(R, z > o) + \phi(R) = \omega R$$

and

$$v_\theta(o, z > o) = W(o, z > o) + \phi(o) = o$$

For these boundary conditions to be homogeneous, the following must be true:

$$\phi(R) = \omega R$$

$$\phi(o) = o$$

Thus, from eq. 8 and the preceding conditions,

$$\phi(r) = \omega r$$

and the transformation expression becomes

$$v_\theta(r, z) = W(r, z) + \omega r$$

Then eq. 6 reduces to the same form as eq. 1

$$\frac{\partial^2 W}{\partial r^2} + \frac{1}{r}\frac{\partial W}{\partial r} - \frac{W}{r^2} = 2k\frac{\partial W}{\partial z} - \frac{\partial^2 W}{\partial z^2}$$

with homogeneous boundary conditions

$$W(R,\ z > o) = o$$

$$W(o,\ z > o) = o$$

The solution for W has the same form as v_θ for $z < o$ except a_1 is replaced by a_2 :

$$W(r,z) = \sum_{s=1}^{\infty} P_s\ J_1(\alpha_s r)\ \exp\ (a_2 z) \qquad z > o$$

or

$$v_\theta(r, z > o) = \omega r + \sum_{s=1}^{\infty} P_s J_1(\alpha_s r) e^{a_2 z} \tag{9}$$

The constants K_s and P_s are determined from the matching conditions at $z = o$ where v_θ and $\frac{\partial v_\theta}{\partial z}$ are continuous.

In order to obtain expressions for P_s and K_s, the variable r is represented as a series expansion of Bessel functions,

$$r = \sum_{s=1}^{\infty} \frac{2J_2(\alpha_s R) J_1(\alpha_s r)}{\alpha_s \{-J_2(\alpha_s R) + J_1(\alpha_s R)/\alpha_s R\}^2} \tag{10}$$

The derivation of this expression is presented in the appendix. At $z = o$,

$$v_\theta(r, z < o) = v_\theta(r,\ z > o)$$

or

$$\sum_{s=1}^{\infty} K_s J_1(\alpha_s r) = \omega r + \sum_{s=1}^{\infty} P_s J_1(\alpha_s r) \tag{11}$$

and,

$$\left(\frac{\partial v_\theta}{\partial z}\right)_{z<o} = \left(\frac{\partial v_\theta}{\partial z}\right)_{z>o}$$

or

$$\sum_{s=1}^{\infty} K_s J_1(\alpha_s R)\ a_1 = \sum_{s=1}^{\infty} P_s J_1(\alpha_s r)\ a_2 \tag{12}$$

From eqs. (10), (11), and (12), the following are obtained:

$$K_s = \frac{2\omega\ J_2(\alpha_s R)}{\alpha_s\ \{-J_2(\alpha_s R) + J_1(\alpha_s R)/\alpha_s R\}^2} + P_s \tag{13}$$

$$a_1 K_s = a_2 P_s$$

Using the expressions for a_1 and a_2,

$$K_s = \frac{-\omega\ J_2(\alpha_s R)}{\alpha_s\ \{-J_2(\alpha_s R) + J_1(\alpha_s R)/\alpha_s R\}^2}\left[\frac{1}{\sqrt{1 + (\alpha_s/k)^2}} - 1\right]$$

$$P_s = \frac{-\omega\ J_2(\alpha_s R)}{\alpha_s\ \{-J_2(\alpha_s R) + J_1(\alpha_s R)/\alpha_s R\}^2}\left[\frac{1}{\sqrt{1 + (\alpha_s/k)^2}} + 1\right]$$

The solution for v_θ is thus complete.

The vorticity or fluid rotation at a point is defined as

$$\overline{\Omega} = 2\overline{\omega} = \nabla \times \overline{v}$$

or $\Omega_z = 2\omega_z = \nabla \times v_z$

$$\Omega_v = \frac{\partial v_\theta}{\partial r} + \frac{v_\theta}{r}$$

Using the recursion relation for the derivative of a Bessel function and the definition for Ω, the following expressions for Ω are obtained:

$$\Omega(z < o) = \sum_{s=1}^{\infty} K_s \exp(a_1 z) J_o(\alpha_s r)\alpha_s \qquad z < o$$

$$\Omega(z > o) = 2\omega + \sum_{s=1}^{\infty} P_s \exp(a_2 z) J_o(\alpha_s r)\alpha_s \quad z > o \tag{14}$$

Along the center line, $J_o(o) = 1$. Therefore,

$$\Omega_z(o, z < o) = \sum_{s=1}^{\infty} K_s \alpha_s \exp(a_1 z)$$

$$\Omega_z(o, z > o) = 2\omega + \sum_{s=1}^{\infty} P_s \alpha_s \exp(\alpha_2 z) \tag{15}$$

The variation of the vorticity along the z axis is exponential as shown in the expressions for Ω_z. The degree of this variation depends on the parameter k in eq. 1 and on the roots of $J_1(\alpha_s R) = o$. The zone of the highest variation of vorticity decreases to a narrow region at the fixed-rotating junction when ρ, v_z and tube size are fixed. In this region, hydrodynamic twisting action on textile fibers can occur and be controlled. This action is directly proportional to the rotational rate of the tube.

Two parameters resulting from the vortex tube analysis may be useful in characterizing the production of yarn in the laboratory. These are the Reynold's number, $N_r = \frac{\rho \bar{V} D}{\mu} = 2kD$, and the Strouhal number, $N_s = \omega D/\bar{V}$; both parameters are readily obtained by making the velocity equations non-dimensional.

EXPERIMENTAL DETAILS AND DISCUSSION

1. The Vortex Generator

A vortex generator, based on the characteristics of a group I system and the results in the analysis section, was designed, built, and tested. A schematic of the spinning assembly is shown in Fig. 6 and the rotating tube assembly in Fig. 7. A stainless steel tank with an 1800 ml capacity was used to contain a slurry of fibers dispersed in a viscous fluid such as corn syrup or glycerol. A 3/8" diameter stainless steel tube with a conical entrance (converging) was extended into the tank from the top to within 1/2" of the bottom. A lid through which the tube extended bolted onto the tank and provided an O-ring seal capable of 100 psi pressure. The tube led to a ball valve with a 1/4" reducer connected to one end. The rotating tube assembly was connected to this reducer.

The spinning assembly was oriented vertically in order to eliminate gravitational effects on the spinning process. Flow was initiated by controlling the pressure in the slurry tank with nitrogen pressure. A photograph of the assembly is shown in Fig. 8. A Fisher variable speed stirring motor was used to rotate the spinning tube and an Electrocraft motor control assembly with a 100:1 reducer was used to drive the drum take-up assembly.

The rotating tube assembly consisted of standard 6 mm glass tube, with the lower section (4") fixed, and the upper section (6") rotatable. The fixed tube was pressed into Teflon sleeves which in turn were pressed into an aluminum mount. The rotating tube was similarly pressed into Teflon sleeves which in turn were pressed into ball bearings. Teflon was selected for the sleeve material since easy replacement of the sleeves was required in order to evaluate various tube sizes. A brass collar with a Teflon core was used for a mechanical seal, the core being the contact material. A cap covered the end of the rotating tube to prevent the yarn from wrapping around the tube. The yarn issued through a hole in the end of the cap the size of the inside tube diameter (4 mm).

2. Carrier Fiber

The formation of yarn with high modulus fibers required the wrapping or entanglement of these fibers by a carrier fiber. In the preliminary investigations cotton was used, but it produced a lumpy slurry, which caused a problem of discontinuous feeding. Efforts to use cotton as the carrier were abandoned after attempts to disperse the cotton fibers failed. The next candidate was an uncrimpted synthetic fiber which would crimp upon heating in a polar liquid or by exposure to water. Three fibers were considered which met this criterion. They are:

(a) Orlon Sayelle Type 21 (du Pont Co.). This is a tri-component acrylic fiber which exhibits three-dimensional crimp upon heating. The fiber has a reversible crimp characteristic since it elongates when exposed to water.

(b) Avicron (American Viscose Corp.). Crimp is induced by water.

(c) Acrilan 57A (Monsanto Textiles Company). This is a bicomponent fiber which after special processing will crimp when its temperature is elevated to the boiling point of water in a polar liquid.

Chopped (1/2" and 3/4") Acrilan 57A was selected for use in the rotating tube spinner. The chopping process produced sufficient heat to sinter and fuse together the ends of the fibers. The fused ends had to be separated, and this was accomplsihed by filing the ends of the bundles.

3. Slurry Preparation

In order to successfully spin a yarn, a slurry must be prepared with the high modulus and/or low modulus fibers uniformly dispersed throughout a viscous fluid. Dispersion of high modulus fibers was accomplished by placing the fibers in the viscous fluid, and rotating a Teflon cylinder (length = 5", diameter = 2") in a 2000 ml beaker containing the mixture. Takano (59) made a lengthy study of dispersion using this method. However, complete dispersion of 1/2" and 3/4" uncrimped low modulus fibers

in glycerol or corn syrup was not obtained by this approach. There was partial dispersion but a ball of entangled fibers also formed between the rotor and beaker. To eliminate the entanglement the low modulus fibers were dispersed by spreading the fibers thinly on the surface of the fluid and introducing them into the fluid by an up-down stroking of a stirring rod (kneading action). When using corn syrup, the temperature was increased to 60°C to reduce the viscosity. With the kneading action, dispersion was nearly complete and the uniformity appeared excellent. When dispersing both high and low modulus fibers, the high-modulus fibers were dispersed first with the rotating cylinder, and then the low modulus fibers were dispersed in the slurry using the kneading action.

4. Spinning Procedure

For spinning, a slurry of approximately 1400 ml was placed in the spinning pot which was sealed and pressurized to induce flow. The spinning speed of the rotating tube was set between 2000-3000 rpm. Flow was initiated by opening the ball valve. A yarn formed along the axis of the rotating tube at the fixed-rotating junction. The speed of the take-up drum was carefully adjusted to match the flow rate through the spinner.

5. Yarn Production

Several attempts were made to spin a yarn from a slurry of 3/4" Acrilan 57A and glycerol with no success. Descriptions of two attempts follows:

(a) 9.66 grams of 3/4" Acrilan 57A were dispersed in 1400 ml of glycerol in a 2000 ml beaker. Dispersion was accomplished by rotating the Teflon cylinder at 450 rpm. After dispersion, the slurry was heated slowly to 100°C on a hot plate to induce crimp. Spinning was unsuccessful.

(b) 8.2 grams of 3/4" Acrilan 57A were dispersed in glycerol as described above. The slurry was heated on a hot plate more quickly than before to induce crimp in the fibers. Melting of the fibers on the bottom of the beaker occurred. These lumps were removed and spinning attempted. Pressure ranges of 10-40 psi and spinning speeds of 2000-3000 rpm were used, but yarn could not be formed. The Acrilan fibers were found to be only partially crimped. The slurry was reheated in a heating mantle and the fibers fully crimped. The crimped fibers formed an entangled mesh which could not be spun.

The unsuccessful attempts to spin yarn from a glycerol slurry were attributed to an insufficient hydrodynamic twisting force. To increase the twisting force and still operate within the limits of

the apparatus (rotating rate, flow, etc.) slurries using a more viscous fluid (corn syrup) were prepared with four types of fibers. The viscosity of corn syrup is approximately ten times the viscosity of glycerol. The preparation of the slurries and evaluation of yarn are described below.

Acrilan 57A

Chopped (3/4") Acrilan 57A fiber with the bundle ends filed to separate the fused ends were combined with corn syrup in the ratio (8.2 gm fiber/1400 ml fluid). The corn syrup was heated in a mantle to 60°C and the fibers dispersed by placing a few fibers on the surface of the heated corn syrup and stroking them into the syrup with a glass rod. Once dispersed by this method, the Teflon rod was inserted and rotated for 1-2 minutes. The visco-elastic effect was so great that this action was terminated. Visual observations indicated that the slurry was fairly homogeneous.

It was decided to attempt spinning a yarn without producing crimp. The uncrimped slurry was placed in the spinning pot and the pressure set at 15 psi. After presetting the rotating speed to about 2000 rpm, the ball valve was opened and spinning commenced. The effluent was probed by hand and a yarn was picked up. The yarn could be seen travelling up the center of the rotating tube and forming at the rotating-fixed junction. There was no indication that the fibers were oriented along the center line in the approach tube. In the first run, ten inches of yarn were produced.

During handling and washing with water four inches of yarn were lost. It was concluded that a yarn of uncrimped 3/4" Acrilan 57A fibers could be produced using this procedure.

A second run using this same slurry, a pressure setting of 10 psi and a rotation rate of about 2100 rpm, produced about six feet of yarn at a take-up speed of approximately 0.32 in/sec. A third run at a pressure of 17 psi and a rotation rate of about 2200 rpm produced about fifteen feet of yarn at a take-up speed of approximately 0.73 in/sec. For the third run a 100/1 gear reducer driven by an Electrocraft variable speed motor was added to the take-up equipment.

Glass fiber/Acrilan fiber

A slurry of corn syrup, chopped (1/2") E-glass fiber (Johns-Manville, type CS-308A) and chopped (3/4") Acrilan 57A fiber was made. Glass fibers were placed in corn syrup in the ratio (8.0 gm fiber/1400 ml fluid) at room temperature. The Teflon cylinder was rotated in the slurry at approximately 300 rpm for 20 minutes to debundle and disperse the glass fibers. The glass fibers had previously been heated to 600°C for 23 minutes to remove the sizing. The Acrilan carrier fiber was dispersed in the glass fiber/corn syrup slurry at 60°C using the technique described in the previous Acrilan fiber section.

Approximately seven feet of the combination yarn was spun at 2000 rpm, 20 psi and a take-up velocity of 0.66 in/sec. Qualitative inspection of the yarn under a microscope showed good alignment of the glass fibers.

Graphite Fiber

An attempt was made to disperse chopped (3/4") graphite fiber (Union Carbide, with PVA finish washed off) in corn syrup at a ratio (6.0 gm fiber/1400 ml fluid). To disperse the graphite, the Teflon rod was rotated at 300-400 rpm. This dispersing technique reduced the fiber length to less than 1/16", and the work with graphite was terminated.

Silicon Carbide Whiskers/Acrilan Fiber

The most successful spinning occurred with a slurry of silicon carbide whiskers, chopped (3/4") Acrilan 57A and corn syrup. Only 0.7 gm of relatively long whiskers were available and they were placed as 1/4"-1" diameter tufts in 100 ml of corn syrup. With the Teflon cylinder rotating at 350 rpm, the tufts of the whiskers were easily dispersed. The silicon carbide whisker/corn syrup slurry was heated to 60°C and 7 gms of 3/4" Acrilan 57A fibers were dispersed as described above without introducing crimp. The consistency of the slurry appeared to be homogeneous although visual observations indicated the dispersion was less than 100%.

Approximately eighty feet of silicon carbide/Acrilan 57A yarn was spun at a rotation rate of 1800 rpm, a driving pressure of 17 psi and a take-up velocity of 0.66 in/sec. A photo of the yarn is shown in Fig. 10. Although some breakage of whiskers occurred and the shortest fibers did not align in the yarn, the long fibers were aligned and wrapped with the Acrilan fibers. The low whisker concentration was due to the difficulty of harvesting enough whiskers of uniform size from the supply of whiskers.

CONCLUSIONS

Investigations in the laboratory showed the feasibility of spinning a yarn of uncrimped textile staple combined with high-modulus fibers using a vortex tube spinner, provided the fibers were well dispersed in a highly viscous fluid such as corn syrup (100 poise). Spinning with less viscous fluids such as glycerol (6 poise) was unsuccessful. Approximately eighty feet of yarn were produced with long (1/2") high modulus fibers aligned along the yarn's axis using Acrilan 57A fiber as a carrier. Future work will be directed toward using a lower modulus carrier fiber, such as rayon, which will not curl or relax during pyrolysis.

ACKNOWLEDGMENT

The work described in this report is part of the Monsanto/Washington University Association research program on high performance composites sponsored by the Advanced Research Projects Agency (ARPA), Department of Defense, under Office of Naval Research (ONR) Contract No. N00014-67-C-0218, formerly N00014-66-C-0045. Appreciation is also extended to Monsanto Textile Company for providing the Acrilan 57A fibers.

APPENDIX:

Representation of the function r^n as a series expansion of Bessel Functions.

Let $$r^n = \sum_{s=1}^{\infty} A_s J_n(\alpha_s r) \qquad \text{(I)}$$

Each term is multiplied by $rJ_n(\alpha_m r)$ and integrated from 0 to R. If the orthogonality conditions are used,

$$\int_0^R r\, J_n(\alpha_s r)\, J_n(\alpha_m r)\,dr = 0 \qquad m \neq s$$

and

$$\int_0^R r\{J_n(\alpha_s r)\}^2 dr = \frac{R^2}{2}\{J_n'(\alpha_s R)\}^2$$

the following expression results:

$$A_s = \frac{2}{R^2\{J_n'(\alpha_s R)\}^2} \int_0^R r^{n+1} J_n(\alpha_s r)\,dr$$

Inserting the recurssion formula

$$J_n(\alpha_s R) = -J_{n+1}(\alpha_s R) + [n/\alpha_s R]\, J_n(\alpha_s R)$$

into A_s and combining with equation (I) gives

$$r^n = \sum_{s=1}^{\infty} \left[\frac{2R^{n+1} J_{n+1}(\alpha_s R)\, J_n(\alpha_s r)}{R^2\{-J_{n+1}(\alpha_s R) + [n/\alpha_s R] J_n(\alpha_s R)\}^2 \alpha_s}\right]$$

If n = 1

$$r = \sum_{s=1}^{\infty} \left[\frac{2\, J_2(\alpha_s R)\, J_1(\alpha_s r)}{\alpha_s\{-J_2(\alpha_s R) + [1/\alpha_s R] J_1(\alpha_s R)\}^2}\right]$$

REFERENCES

1. Lovelace, A. M., and S. W. Tsai, "Composites Enter the Mainstream of Aerospace Vehicle Design", Astronautics and Aeronautics, 8, [7], 56 (1970).
2. Levitt, A. P., Whisker Technology, Wiley-Interscience, New York (1971).
3. Shaver, Robert G., "Exploratory Development on Techniques of Incorporating Whiskers into Fibers," General Technologies Corporation, Technical Reports AFML-TR-67-93, June 1967.
4. Catling, H., "The Comparative Merits of the Principal Break-Spinning Systems," 53rd Annual Conference of the Textile Instutute, 1968.
5. Goldsmith, H. L. and S. G. Mason, "The Microrheology of Dispersions," Rheology, Vol. 4, Chapter 2, Ed., F. R. Eirich, (1967).
6. Forgacs, F. O. L. and S. G. Mason, J. Colloid Sci., 14,473 (1959).
7. Nawab, M. A. and S. G. Mason, J. Phys. Chem., 62, 1248 (1959).
8. Edberg, B., "A Basic Investigation of the Behavior of Cotton Fibres Subjected to Aerodynamic Forces," 53rd Annual Conference of the Textile Institute, 1968.
9. Gotzfried, K., West German Patent 1,056,018 (April 23, 1959), U. S. Patent 2,911,78[illegible] (Nov. 10, 1959).
10. Strang, P. M. U. S. Patent 2,700,866 (Feb. 1, 1955).
11. Strang, P. M.. "Fluid Spinning", America's Textile Reporter, Part I, January 2, 1964 (8); Part II, January 9, 1964 (9).
12. U.S.D.A. Research Project No. UR-E26-(20)-6, Reports No. 1-4.

13. U.S.D.A. Research Project No. UK 26-(20)-6, Final Report.

14. Gotzfried, K., West German Patent, 1,146,792 (April 4, 1963).

15. Burkhardt, R., East German Patent 46,985 (July 15, 1966).

16. Výskumný Ustav Bavlnárský, B. P. 1,038,433 (Oct. 25, 1967).

17. Pávek, M. et al. Czechoslovakian Patent 115,955 (Sept. 15, 1965).

18. Metcalf, A., U. S. Patent 689,556 (1901).

19. Gross, W., U. S. Patent 1,743,601 (Jan. 14, 1930).

20. Svatý, V. and K. Hula, Czechoslovakian Patent 87,947 (1956).

21. Hula, K., Czechoslovakian Patent 96,668 (1958).

22. Sraitr, S., Czechoslovakian Patent 91,208 (1957).

23. Williams, H. B., U. S. Patent 2,808,697 (1955).

24. Mayo, M. S., U. S. Patent 2,451,504 (Oct. 19, 1948).

25. Keeler, L. M., U. S. Patent 2,698,972 (Jan. 11, 1955).

26. Sdruzeni Podniki Textilniho Strojirenstvi, B. P. 974,230 (Nov. 4, 1964).

27. Pávek, M., Czechoslovakian Patent 99,106 (1959).

28. Pávek, M. et al., Czechoslovakian Patent 92,270 (Feb. 15, 1959); 83,048 (April 15, 1959); 101,216 (Feb. 15, 1961).

29. Pávek, M. et al., Czechoslovakian Patent 111,479 (July 15, 1964).

30. Oglesby, S. Jr. et al., U. S. Patent 2,711,626 (Oct. 24, 1951).

31. Central´ny Nauchno-Issledovatelsky Institute Khlopchato-bumazhai Promyshlennosti, B. P. 979,962 (Jan. 6, 1965).

32. Krause, H. W., "Open-End Spinning and Yarn Quality", 53rd Annual Conference of the Textile Institute, 1968

33. Barker, A. F., J. Text. Inst., 27, 98 (1936).

34. Barker, A. F., B. P. 411,862 (June 11, 1934).

35. Kyame, G. J., U. S. Patent 2,732,682 (Jan. 31, 1956); G. J. Kyame et al., U. S. Patent 3,110,150 (Nov. 12, 1963); 3,295,307 (Jan. 3, 1967).

36. Meimberg, J., B. P. 828,804 (Feb. 24, 1960).

37. Putnam, R. V., U. S. Patent 3,132,475 (May 12, 1964).

38. Berthelsen, S., B. P. 477,259 (Dec. 24, 1937).

39. Meimberg, J., Australian Patent 215,109 (1955); West German Patent 1,009,541 (May 29, 1967).

40. Cizek, L., Czechoslovakian Patent 108,328 (1961); 108,575 (1961).

41. Zlevor, V., Czechoslovakian Patent 125,962 (1965).

42. Vyzkumný Ustav Bavlnáisky, B. P. 978,958 (Jan. 1, 1956); 993,877 (June 2, 1965).

43. Spinnbau, G. M. b. H., B. P. 976,512 (Nov. 25, 1964).

44. Societe Alsacienne de Constructions Mecaniques, B. P. 979,930 (Jan. 6, 1965); Y. Juillard, French Patent 1,349,155 (Dec. 9, 1963).

45. Pávek, M. assigned to Elitex and S.P.T.S., B. P. 1,031,150 (May 25, 1966).

46. 53rd Annual Conference of the Textile Institute, 1968.

47. Lord, P. P., "Whisker Break-Spinning?" 53rd Annual Conference of the Textile Institute, 1968.

48. Rohlena, V., "Open-End Spinning in Czechoslovakia," 53rd Annual Conference of the Textile Institute, 1968.

49. Textile World, 117, [6], 143, (1967).

50. Kyame, G. J. and H. R. Copeland, Textile World, 114, [3], 48 (1964).

51. Textile Recorder, 85, [12], 51, (1967).

52. Textile Weekly, 67, [2], 177, (1967).

53. Abbenheim, P., "New Czech Spinning Process", Man-Made Textiles, 39, [464], 50 (February 1963).

54. Lord, P. R., "Prospects for Break Spinning by Drum Technique", Textile Recorder, 85, [1017], 28 (Dec. 1967); 84, [999], 58 (June 1966).

55. Ripka, J., "Theory of the Spinning Process", Prague Symposium, 1967.

56, Kasparek, J., "Analysis of Some Geometrical and Mechanical Properties of "Open-End" Yarns",

57. Urano, Y., M. Horiuchi, et al., "Spinning Equipment Using Air Flow", Textile Machinery Soc. Japan - Journal, 10, [4], 152, (September 1964).

58. Smith, P. A., "Studies in Modern Yarn Production", Textile Institute and Industry, July 1968.

59. Takano, Mark, "Rheology of Rod-Like Particles in Viscous Media". Part I. Monsanto/Washington University ONR/ARPA Association Report HPC 68-73, (1969).

FIGURE CAPTIONS

Figure 1	A simple air-vortex spinner: A Group I device.
Figure 2	The Pavels "basket spinner"; A Group II device.
Figure 3	Barker's spinner: A Group III device.
Figure 4	Break spinning centrifugal pot uptwister: A Group IV device.
Figure 5	Spinning system of BD 200 machine.
Figure 6	Schematic of open-end spinning apparatus.
Figure 7	Rotating tube assembly.
Figure 8	Vortex tube spinning assembly.
Figure 9a 9b	Tube assembly and yarn.
Figure 10	Spool of silicon carbide whiskers/uncrimped Acrilan 57A fiber (80 ft. of yarn).

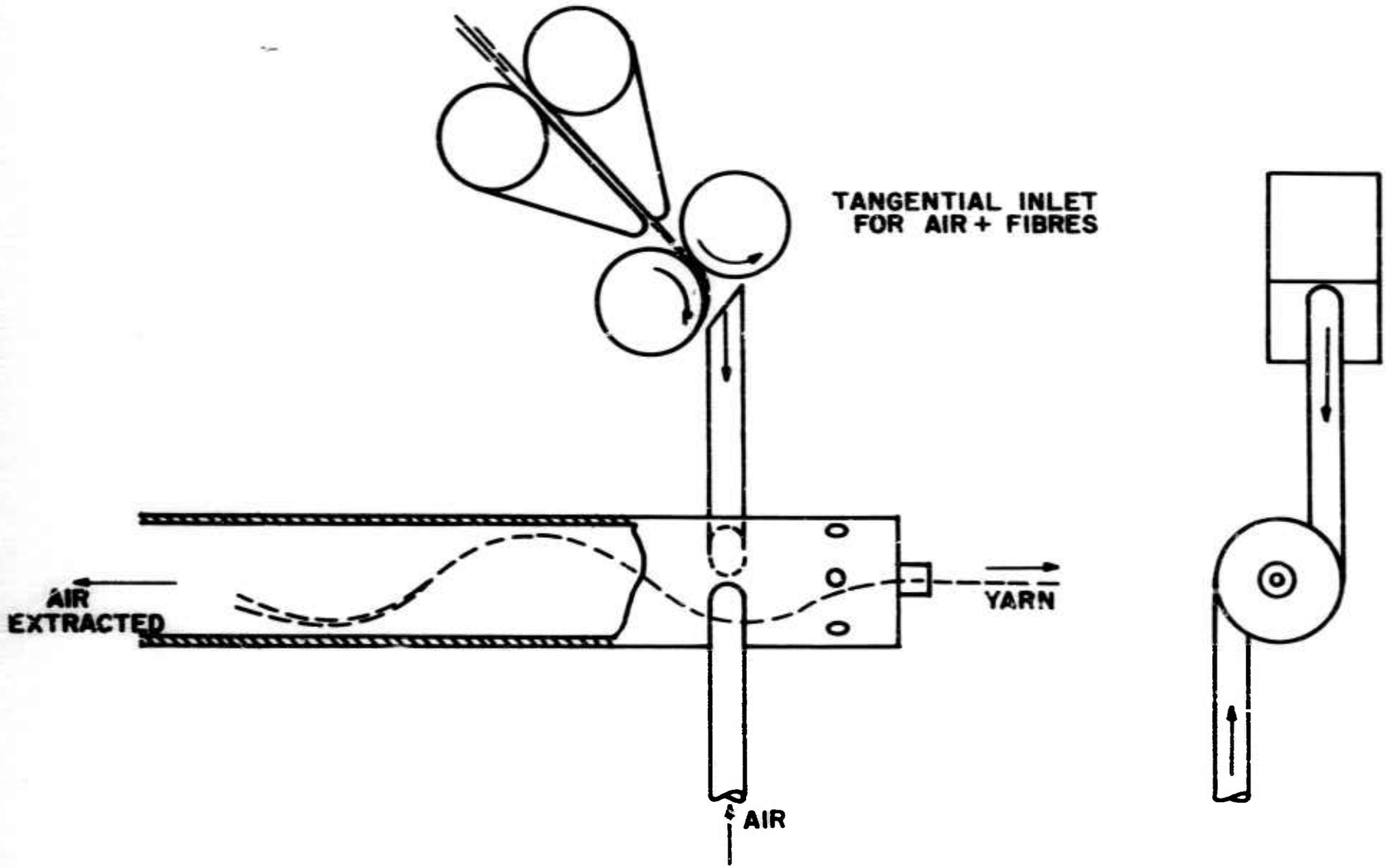

SIMPLE AIR-VORTEX SPINNER: A GROUP I DEVICE

FIG. I

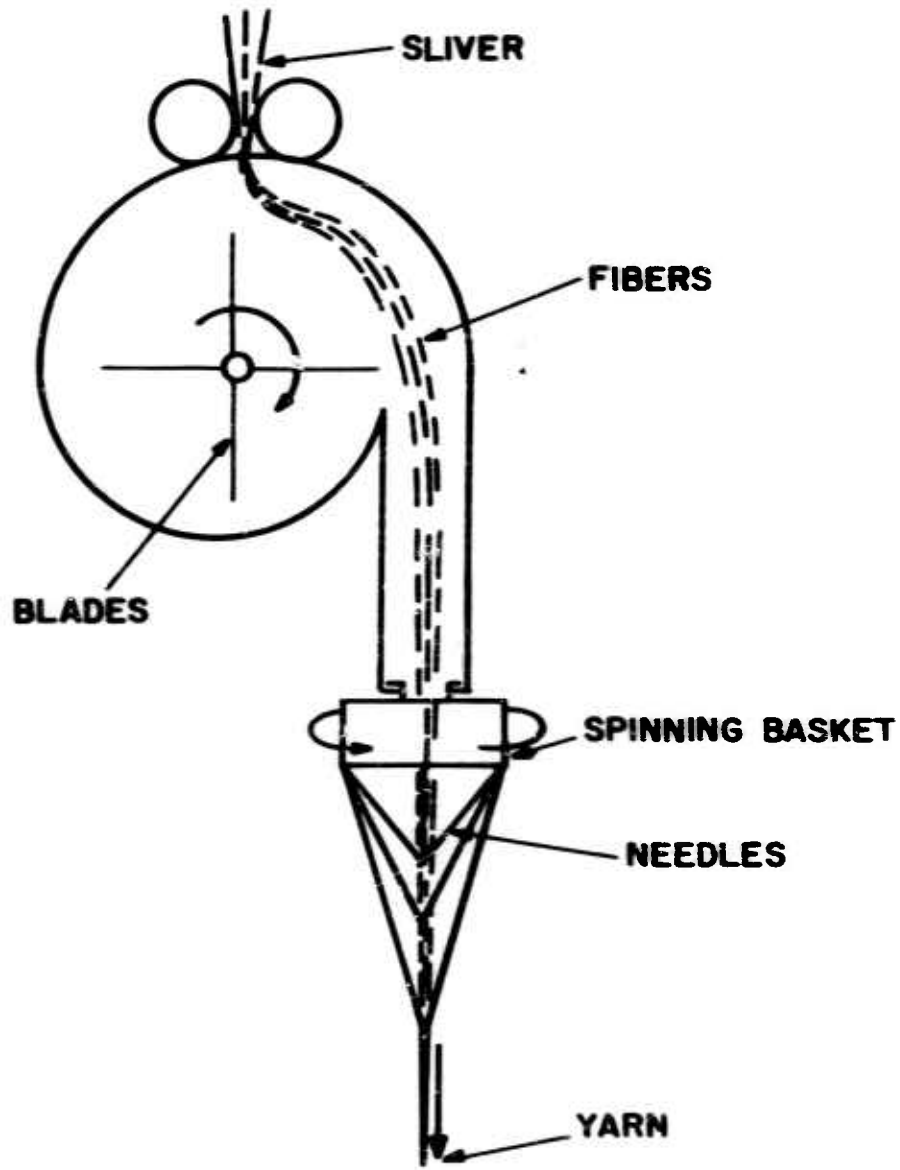

THE PÁVEK "BASKET SPINNER:" A GROUP 2 DEVICE

FIG. 2

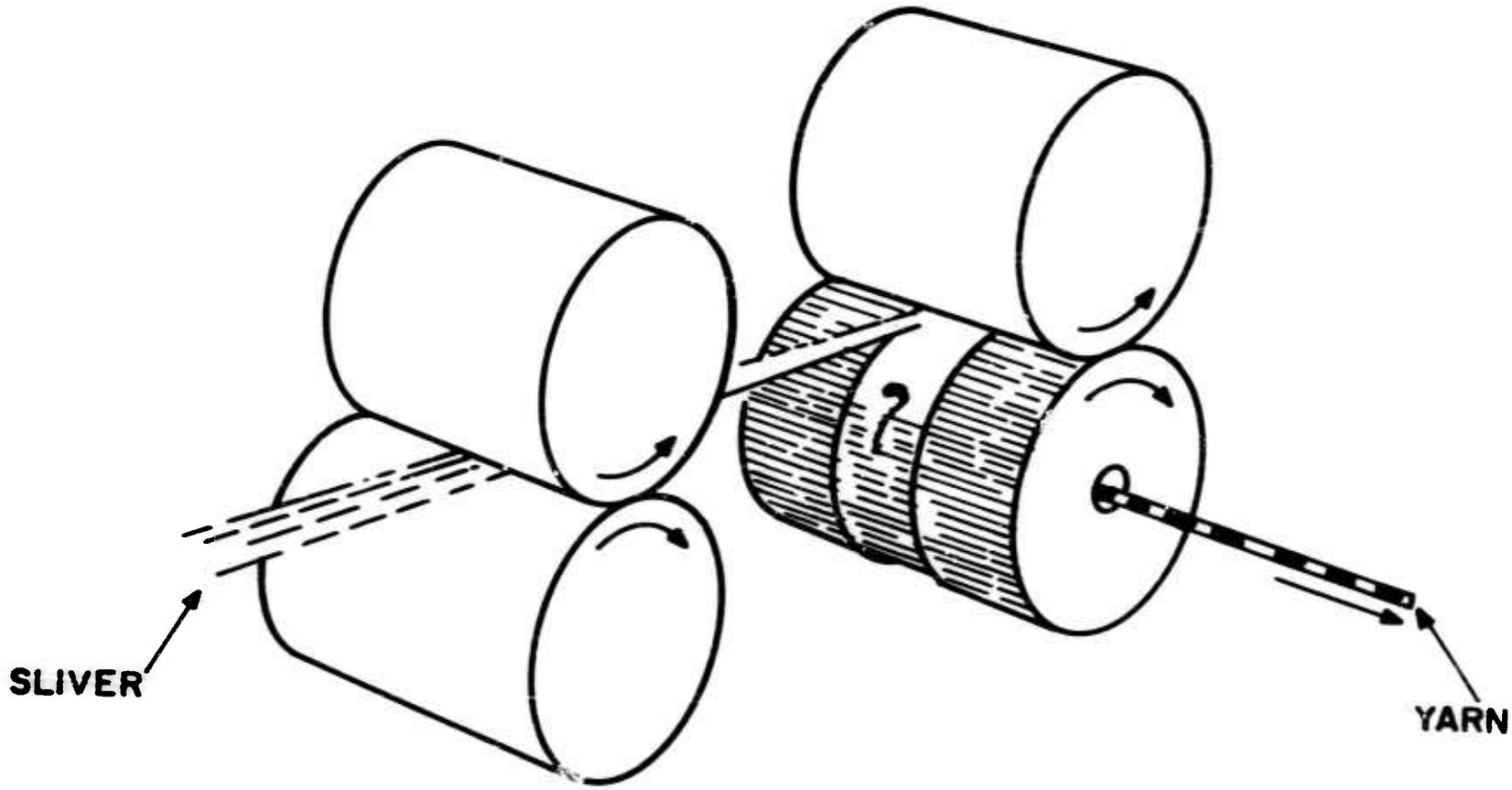

BARKERS SPINNER: A GROUP 3 DEVICE

FIG. 3

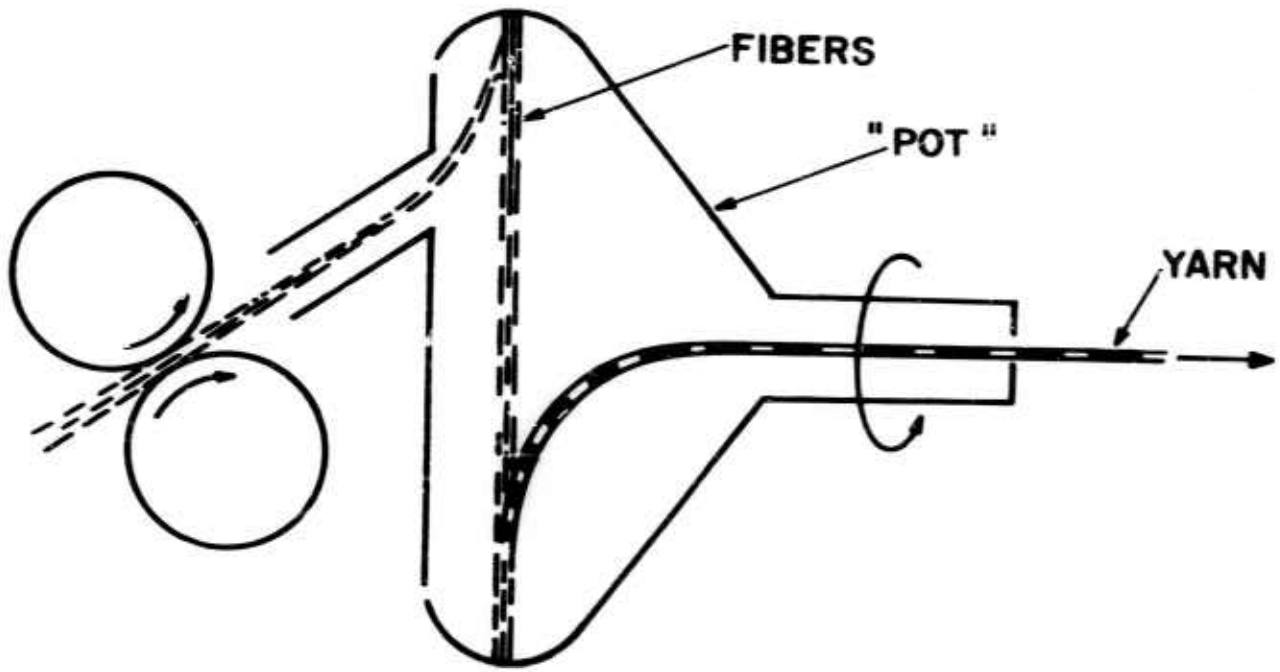

BREAK SPINNING CENTRIFUGAL-POT UPTWISTER: A GROUP 4 DEVICE
FIG. 4

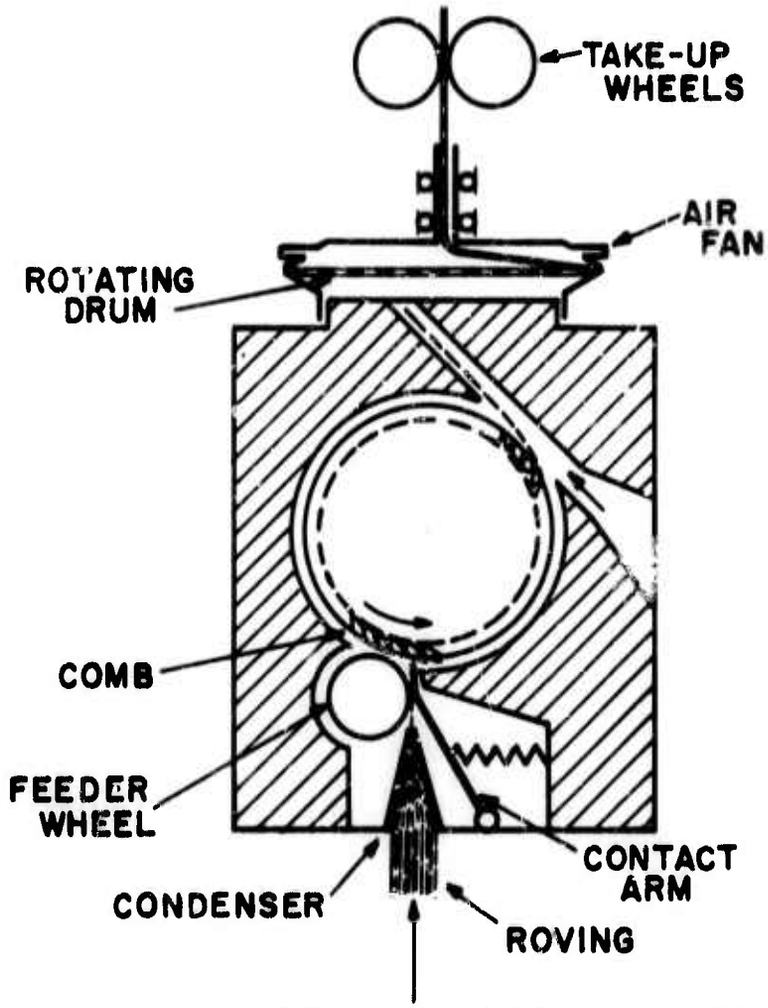

SPINNING SYSTEM OF BD 200 MACHINE

FIG. 5

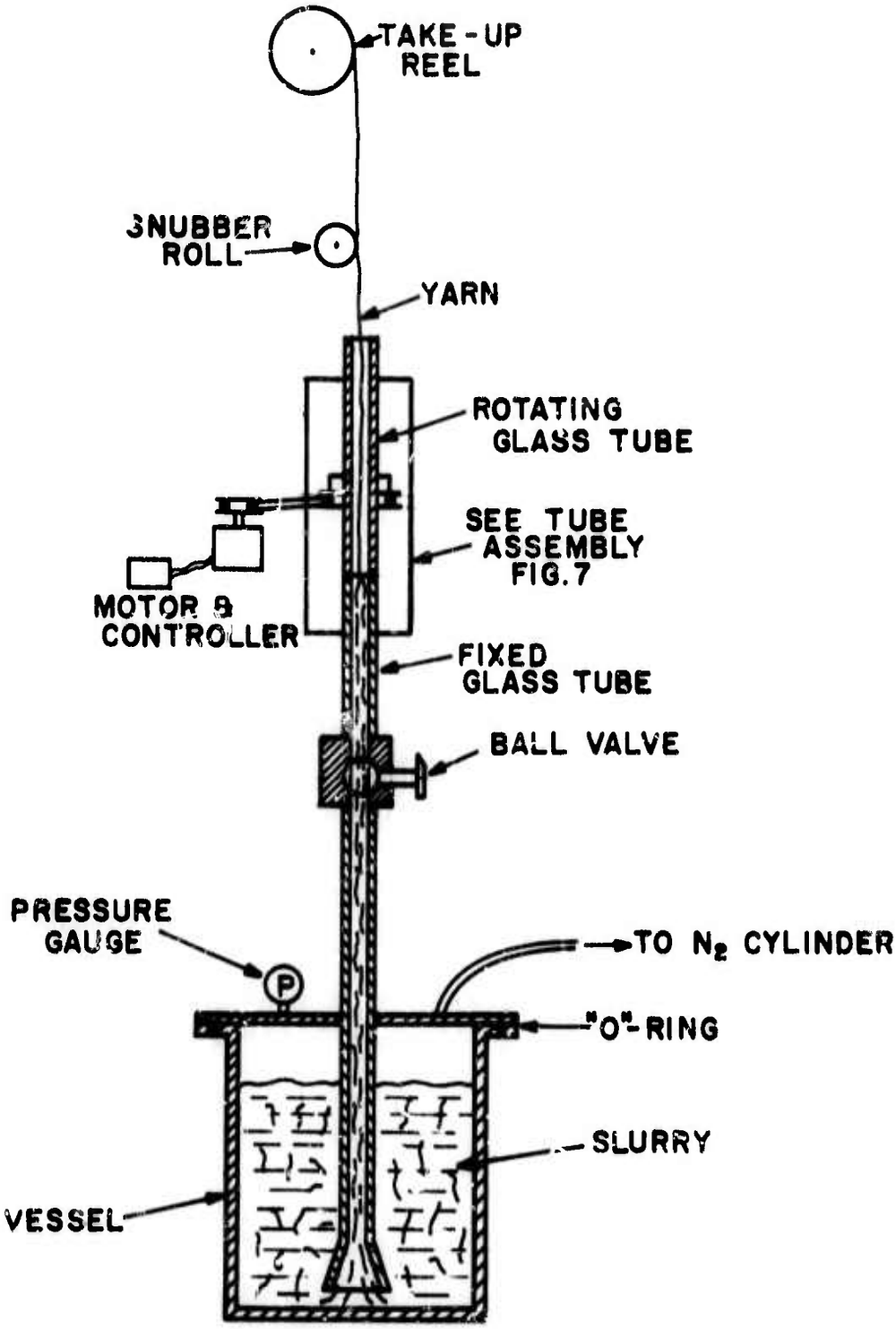

SCHEMATIC OF OPEN-END SPINNING APPARATUS

FIG. 6

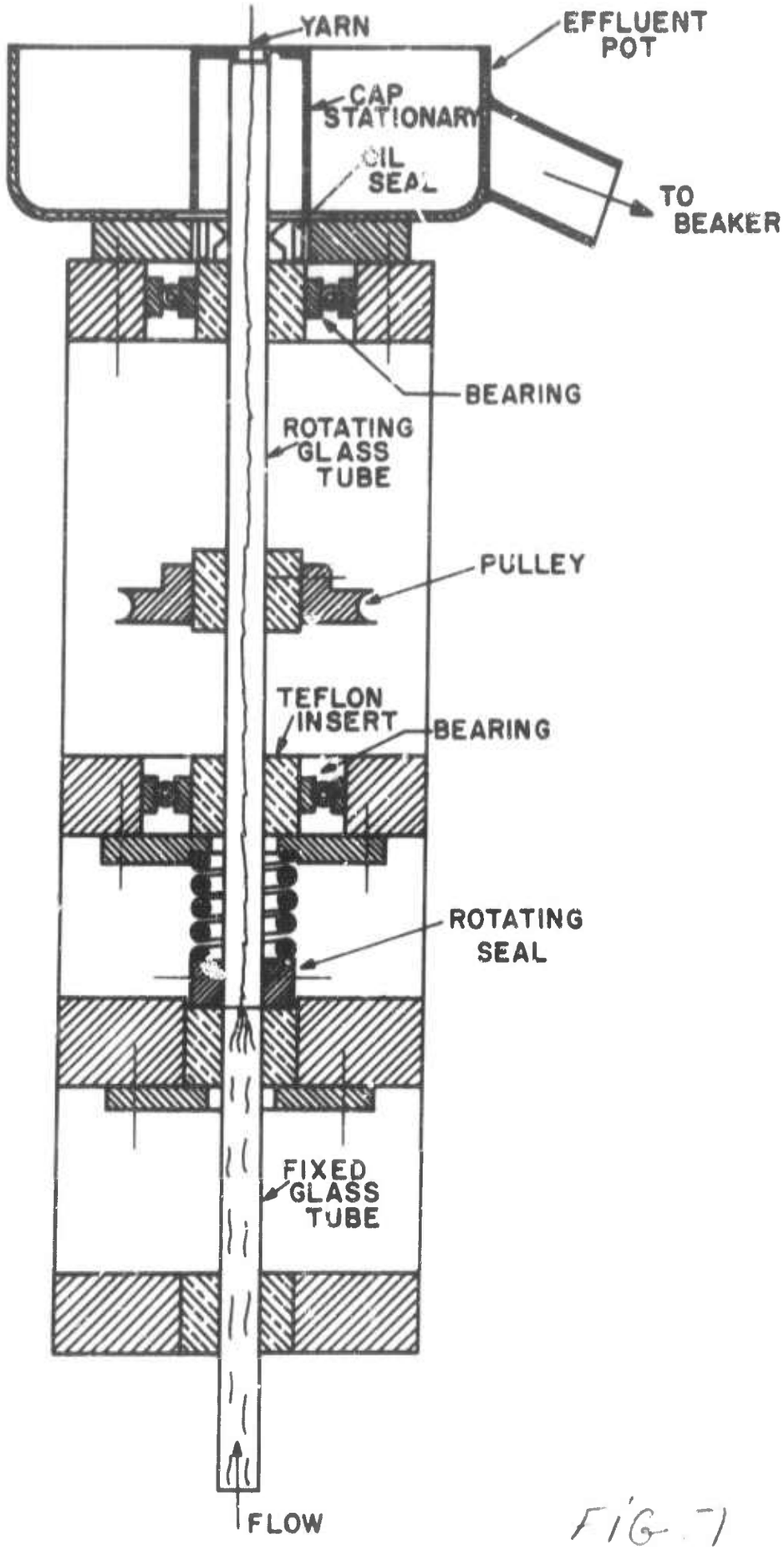

FIG. 7

ROTATING TUBE ASSEMBLY

FIG. 7

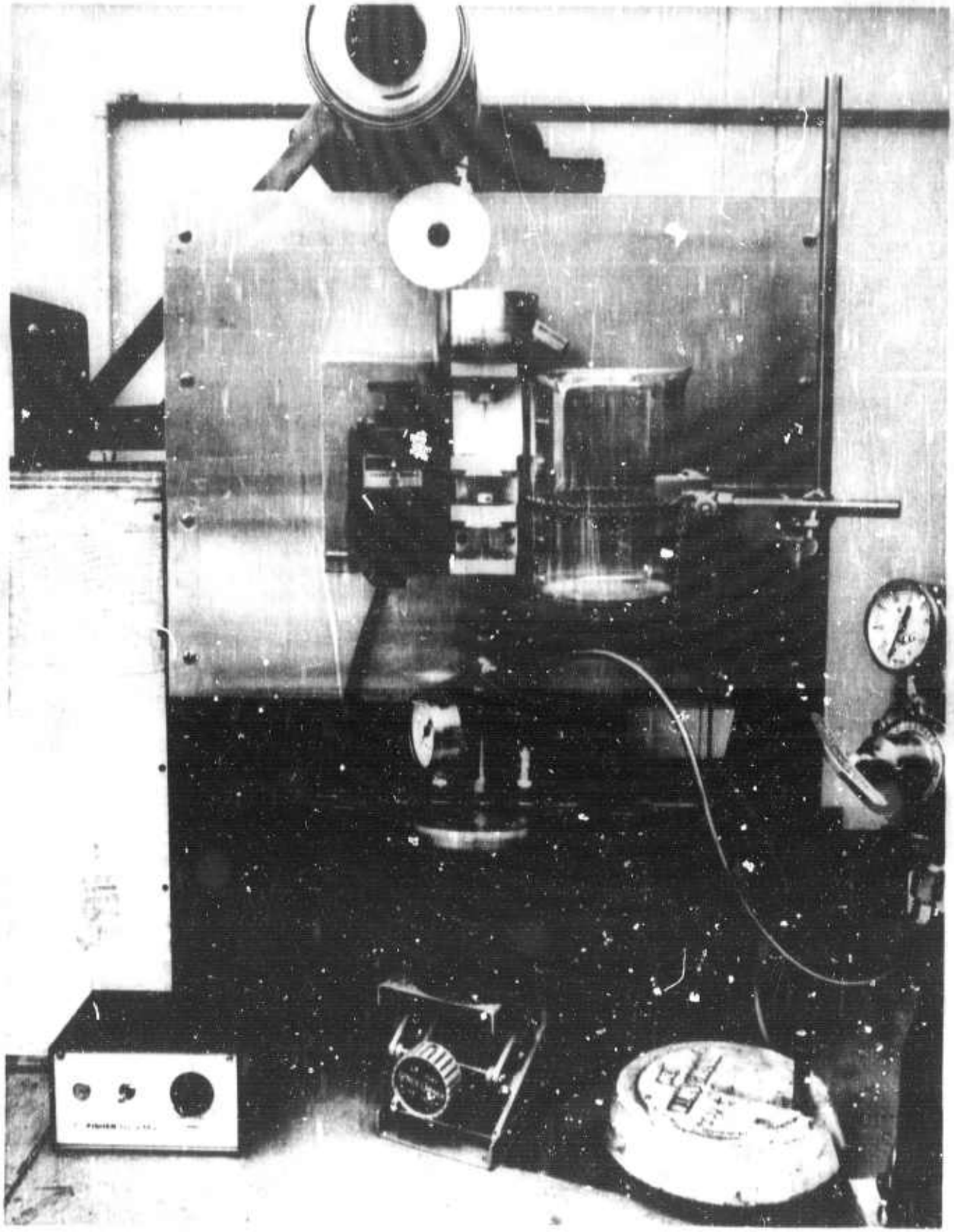

Figure 8. Vortex Tube Spinning Assembly

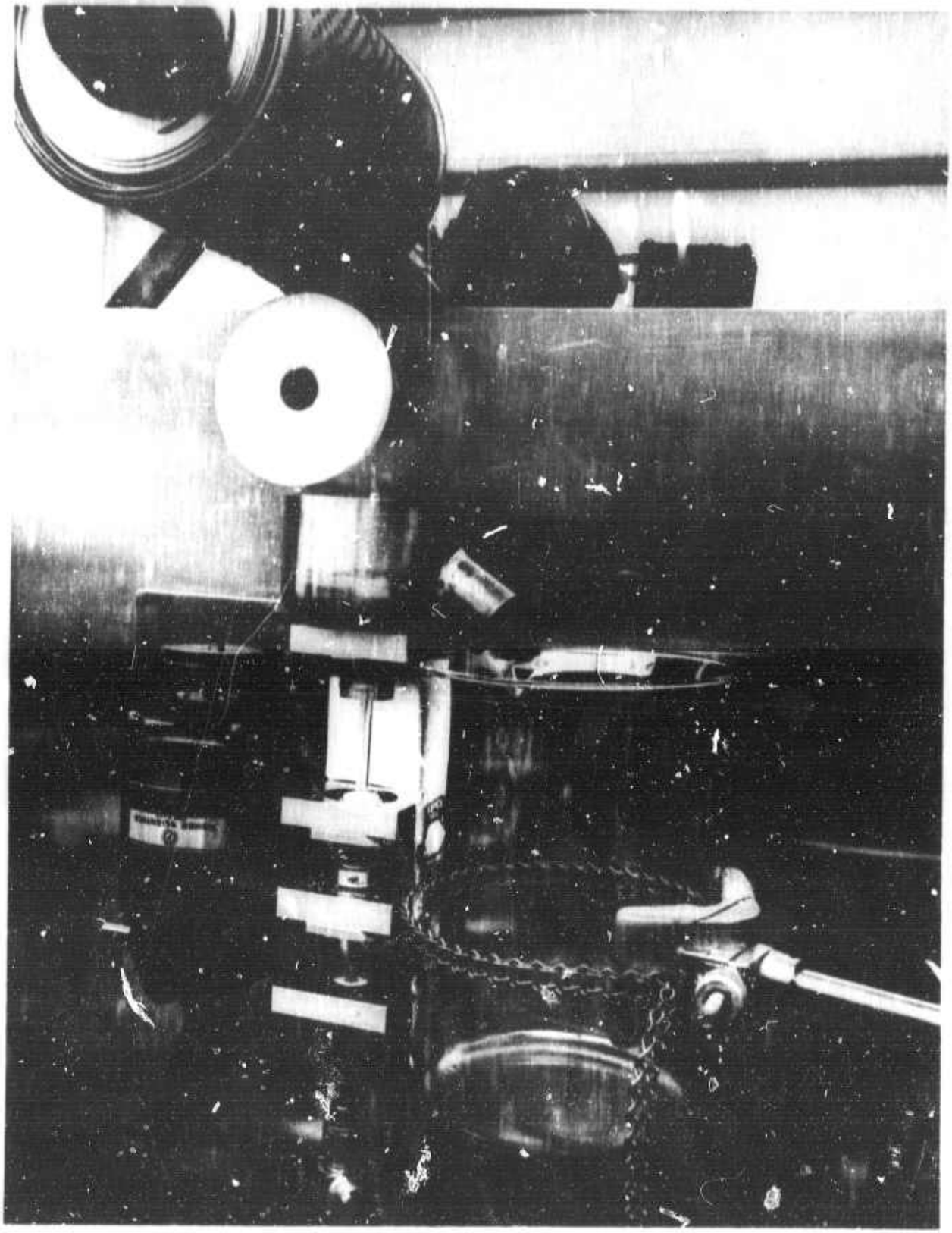

Figure 9a. Tube Assembly and Yarn

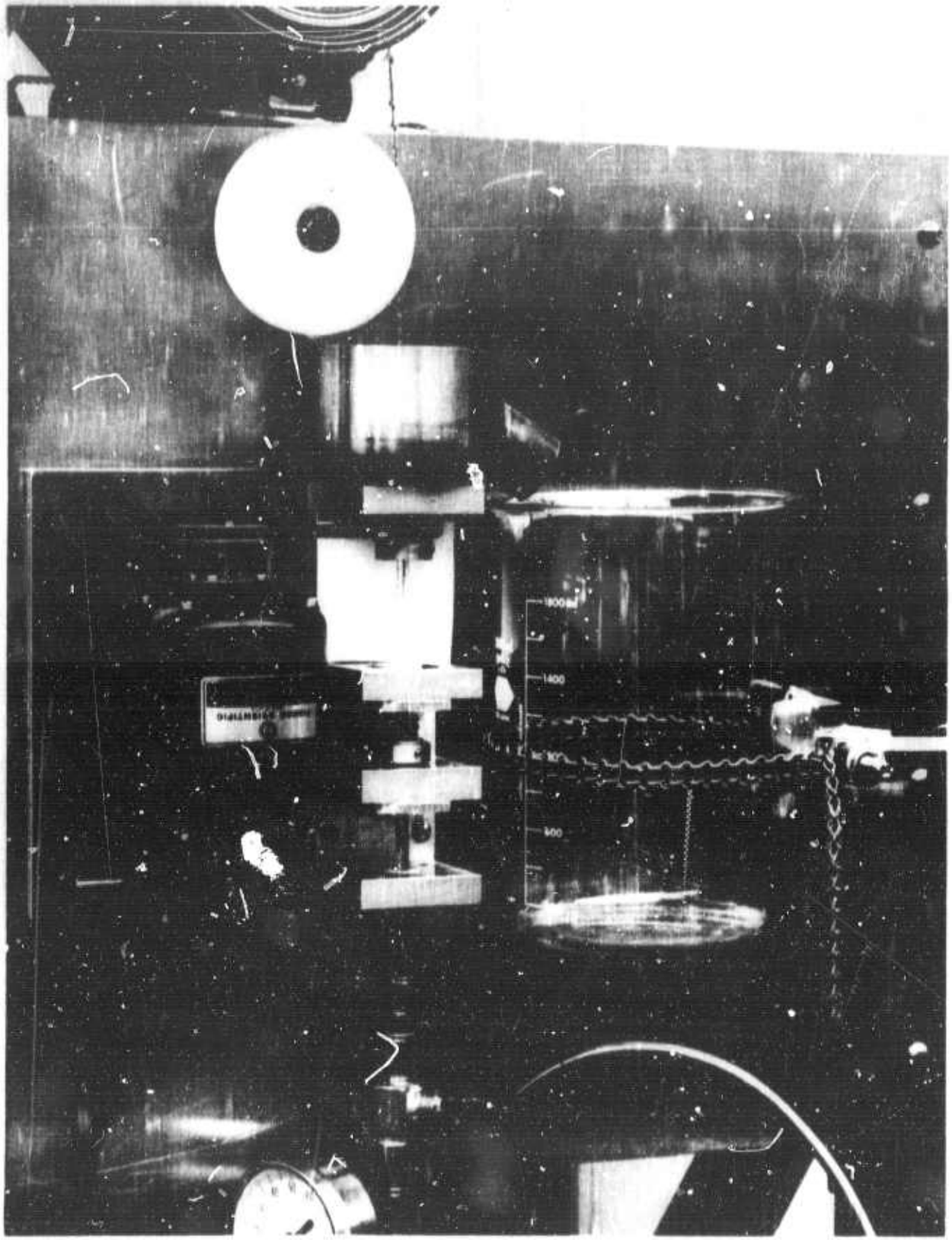

Figure 9b. Tube Assembly and Yarn

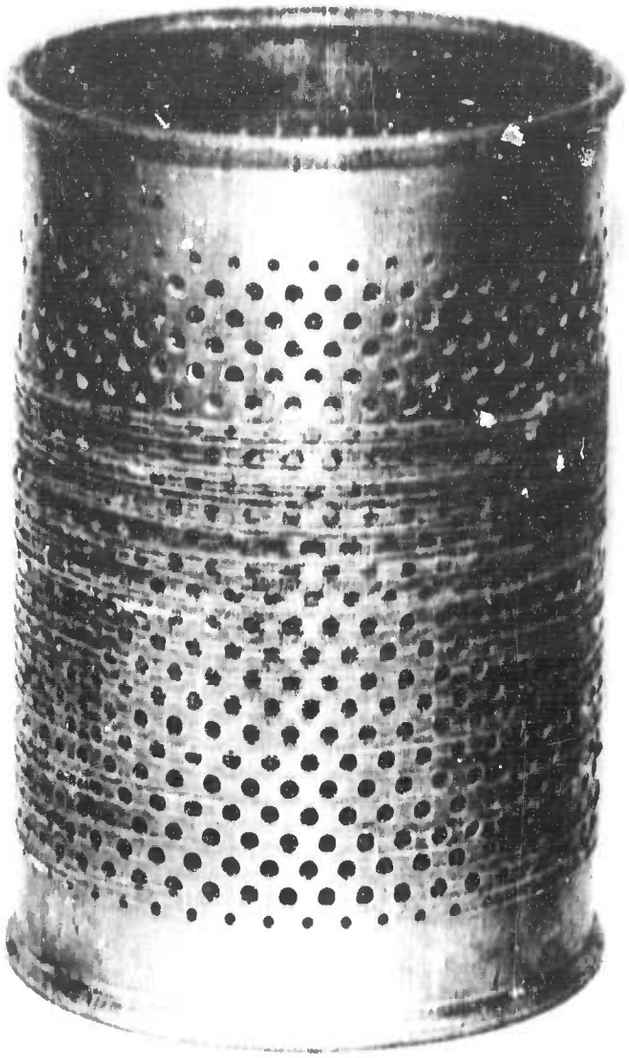

Figure 10. Spool of Silicon Carbide Whiskers - Uncrimped 57A Acrilan Fibers - 80 Ft.

Distribution
not Shot

Security Classification

DOCUMENT CONTROL DATA - R & D

Security classification of title, body of abstract and indexing annotation must be entered when the overall report is classified)

1. ORIGINATING ACTIVITY (Corporate author)

Monsanto Research Corporation

2a. REPORT SECURITY CLASSIFICATION

Unclassified

2b. GROUP

3. REPORT TITLE

Development of a Method of Concentrating High Modulus, Open-End Fibers into a Yarn

4. DESCRIPTIVE NOTES (Type of report and inclusive dates)

5. AUTHOR(S) (First name, middle initial, last name)

Myrne R. Riley

6. REPORT DATE

April, 1972

7a. TOTAL NO. OF PAGES

36

7b. NO. OF REFS

59

8a. CONTRACT OR GRANT NO.

N00014-67-C-0218

b. PROJECT NO.

c.

d.

9a. ORIGINATOR'S REPORT NUMBER(S)

HPC 72-147

9b. OTHER REPORT NO(S) (Any other numbers that may be assigned this report)

10. DISTRIBUTION STATEMENT

[redacted]

11. SUPPLEMENTARY NOTES

12. SPONSORING MILITARY ACTIVITY

Office of Naval Research
Washington, D. C. 20360

13. ABSTRACT

A single slurry vortex spinning apparatus was developed to form a multi-component yarn. The design of the apparatus was based on developments in the textile industry to produce yarn by means of open-end spinning. A slurry of dispersed fibers was transferred to the spinning zone of the device, and as it passed through a rapidly rotating tube, the hydrodynamic action twisted the fibers into a yarn.

The device was demonstrated with uncrimped textile staple, and integral mixtures of high modulus fibers with the lower modulus synthetic fibers. The yarn issuing from the rotating tube was snubbed by a roller, washed free of the suspending liquid, and collected on a take-up drum. A summary of open-end spinning systems described in the literature is included. Also, the equations required to describe the hydrodynamic process are presented.

DD FORM 1473 (PAGE 1)

Security Classification

Security Classification

14. KEY WORDS	LINK A ROLE	LINK A WT	LINK B ROLE	LINK B WT	LINK C ROLE	LINK C WT
discontinuous fibers						
whisker fibers						
glass fibers						
two-component yarn						
vortex spinning						
open-end spinning						
fiber dispersion						
rotating-tube vortex						

DD FORM 1 NOV 65 1473 (BACK)

(PAGE 2)

Security Classification