UNCLASSIFIED

AD NUMBER

AD894609

NEW LIMITATION CHANGE

TO

Approved for public release, distribution unlimited

FROM

Distribution authorized to U.S. Gov't. agencies only; Test and Evaluation; Mar 1972. Other requests shall be referred to Naval Ordnance Laboratory, Attn: Code 512, Washington, DC 20350.

AUTHORITY

USNOL, per ltr dtd 29 Aug 1974

THIS PAGE IS UNCLASSIFIED

AD894609

FILE COPY

NOLTR 72-76

ENGINEERING DEVELOPMENT OF THE ARMING DEVICE MK 2 MOD 5

By
William C. Jones

14 MARCH 1972

NOL

NAVAL ORDNANCE LABORATORY, WHITE OAK, SILVER SPRING, MARYLAND

NOLTR 72-76

DISTRIBUTION LIMITED TO U.S. GOVERNMENT AGENCIES ONLY: TEST AND EVALUATION

DATE STATEMENT APPLIED: 14 MARCH 1972

OTHER REQUESTS FOR THIS PUBLICATION MUST BE REFERRED TO: NOL CODE 512

Best Available Copy

ENGINEERING DEVELOPMENT OF THE ARMING DEVICE MK 2 MOD 5

Prepared by:
William C. Jones

ABSTRACT: The Arming Device Mk 2 Mod 5 was developed primarily to improve the reliability of the explosive train of the Mk 2 Arming Device. Two hundred arming devices were fabricated and subjected to an extensive development test program. As a result of that test program, the Arming Device Mk 2 Mod 5 was recommended for release to production.

NAVAL ORDNANCE LABORATORY
SILVER SPRING, MARYLAND

NOLTR 72-76 14 March 1972

Engineering Development of the Arming Device Mk 2 Mod 5

This report describes the design changes made and the development tests conducted on the Arming Device Mk 2 Mod 5, which was developed primarily to improve the reliability of the explosive train of the Mk 2 Arming Device. This work was done under the authority of NAVORDSYSCOM Work Request WR-0-6185.

ROBERT WILLIAMSON II
Captain, USN
Commander

C. F. BOWERSETT
By direction

CONTENTS

	Page
BACKGROUND	1
DESCRIPTION	1
ARMING DEVICE TESTS	2
INERT TESTS	2
DETONATOR TO LEAD SAFETY & RELIABILITY TESTS	3
LEAD TO BOOSTER RELIABILITY TESTS	5
ARMING DEVICE OUTPUT TESTS	5
EXPLOSIVE LOADED TESTS	5
DETONATOR TESTS	7
PACKAGING TESTS	7
PROBLEMS	8
CONCLUSIONS	9

ILLUSTRATIONS

Figure	Title	Page
1	Arming Device Mk 2 Mod 5	11
2	Development Tests	12
3	Detonator to Lead Reliability Test Configuration	13
4	Detonator to Lead Safety Test Configuration	14
5	Arming Device Output Test Configuration	15
6	Damage to Arming Device after Jumble	16
7	Damage to Arming Device after 40-Foot Drop	17
8	Damage to Arming Device after 40-Foot Drop	18
9	Damage after 40-Foot Drop in Mk 19 Exploder	19
10	Old Packaging	20
11	New Packaging	21
12	Problem Areas	22
13	Booster Mold	23

TABLES

Table	Title	Page
1	Arming Device Output Test Results	24
REFERENCES		10

BACKGROUND

The Arming Device Mk 2 Mod 5 (formerly EX 2 Mod 5) was developed as a substitute for all other mods of the Mk 2 Arming Device. The primary purpose of the development was to increase the reliability of the Mk 2 Arming Device by including leads in the explosive train. Whereas the detonators in the other mods fire directly into the booster through an air gap and aluminum barrier, the detonators in the Mod 5 fire into explosive leads, which in turn initiate the booster charge. The need for and the feasibility of this design is reported in reference (a).

DESCRIPTION

Basically, the Arming Device Mk 2 Mod 5 contains the explosive train required of a torpedo exploder. An arming device is utilized in a torpedo exploder system so that the complex target-sensing and safety functions performed by an exploder may be periodically inspected without having the potentially dangerous explosive train attached. The Arming Device Mk 2 Mod 5 is compatible with the Exploder Mk 19 Mods 1 and 12 used in the Torpedoes Mk 37 and Mk 44, and with the Exploder Mk 21 Mod 0 used in the Torpedo Mk 48 Mod 1.

The Arming Device Mk 2 Mod 5 (Fig. 1) is fully disclosed by references (b) and (c). It contains two Mk 57 Mod 1 detonators which, when the arming device is armed, fire through a .030-inch aluminum barrier into two leads, each lead containing 520 milligrams of RDX composition CH-6. The leads then fire into the booster containing 132 grams of RDX composition CH-6. In the safe position the detonators are rotated 90° from the leads, are shorted, and are separated from the booster by a .400-inch thick aluminum barrier. In the armed position, the two detonators are arranged in a redundant type "H" circuit; i.e., the detonators are in parallel with 8-ohm resistors and are in series with each other. The detonators are housed in a shutter which is kept in the safe position by a spring lock during shipment and storage. When the arming device is mated to an exploder, a shutter lock pin or bore rod overrides the spring lock and locks the shutter.

Since the Mod 5 had to be mechanically and electrically interchangeable with other mods of the device, most of its components are carbon copies of those previously used. When this was the case, the old drawings were redrawn after being reviewed for dimensional accuracy, out-of-date specifications, and lack of geometric control. However, there were several areas in the device where design improvements were made. These were as follows:

1. The booster explosive charge was changed from Tetryl to RDX composition CH-6. This change increased the steel dent output of the device by approximately 50%.

2. The plating on the arming device contacts was changed from a straight silver plate to a silver plate plus a gold plate. This should increase the shelf life of the device.

3. The plastic molding material for the contact mounts and shutter was changed from mineral filled diallyl-phthalate and phenolic to the stronger and less brittle glass filled diallyl-phthalate.

4. The drive coupler which mates with the exploder was made an integral part of the shaft which drives the shutter. In previous mods of the arming device the coupler was staked onto the shaft. This stake was susceptible to weakening, and proved to be a source of problems in earlier mods of the device.

ARMING DEVICE TESTS

Two hundred arming devices were fabricated and subjected to tests as shown in Figure 2. These tests are categorized into five groups:

1. Inert loaded arming devices which were subjected to tests to determine the environmental resistance of the inert components of the device.

2. Arming devices which were tested to determine the safety and reliability of the detonator to lead explosive transfer.

3. Arming devices which were tested to determine the reliability of the lead to booster explosive transfer.

4. Explosive loaded arming devices which were fired to obtain steel dent output data for inclusion in the weapon specification.

5. Explosive loaded arming devices which were subjected to standard environmental and safety tests.

A description and the results of these development tests will be explained in detail in the following sections.

INERT TESTS. Ten arming devices were assembled with no detonators, and with linen base phenolic pellets in lieu of the booster charge. These devices were visually inspected and functionally checked, and were subjected to the following tests:

Temperature and Humidity Cycle. Two arming devices were subjected to the twenty-eight day temperature and humidity test per MIL-STD-331. Post test check-out revealed no degradation.

Thermal Shock. Two arming devices were subjected to the thermal shock test per MIL-STD-331. Post test check-out revealed no degradation.

Shock Study. Three arming devices were subjected to this study, which included shocking the devices at higher and higher shock levels until failure occurred or until the limit of the test machinery was reached. The study was performed at three temperatures (-65°F, ambient, +160°F), with one arming device for each temperature, and in 4 axes of each device. There were no failures of the arming device up to a shock level of 1500 g's, 1 millisecond half-sine pulse duration; at which level the booster to housing crimp would deform enough to allow rotation of the booster cup. As the shock level was increased to 3000 g's, 1 millisecond half-sine pulse duration; the crimp would fail completely allowing the booster to separate from the arming device. The shock levels at which these failures occurred are much higher than the arming device would be subjected to in its service life.

Vibration Study. Three arming devices were vibrated in three mutually perpendicular axes at -65°F, ambient, and +160°F; with one arming device used for each temperature. The vibration was simple harmonic with a logarithmic sweep over the frequency range of 10 to 4000 Hz. One sweep was made with an amplitude of 5 g's; with the displacement limited to .5-inch peak-to-peak. Another sweep was made with an amplitude of 20 g's; with the displacement limited to .5-inch peak-to-peak. A visual inspection and functional check of the arming devices after each sweep indicated no degradation.

DETONATOR TO LEAD SAFETY & RELIABILITY TESTS. These tests were conducted to determine the safety and reliability of the detonator to lead explosive transfer. The tests were divided into three categories: (1) armed position reliability; (2) unarmed position safety; and (3) small angular misalignment between detonators and leads.

Armed Position Reliability Tests. Ten arming devices were fired in the fully armed position (detonator and lead centerlines coincident) using detonators with a 114-milligram PETN base charge vice the 190-milligram PETN base charge in the standard Mk 57 Mod 1 detonator. The test set-up is shown in Figure 3. In all of the shots, the leads functioned high order, yielding steel dent values between 35.5 and 37.8 mils.

Unarmed Position Safety Tests. Ten safety tests were performed with the arming device in the unarmed position using detonators with a 285-milligram PETN base charge. The test set-up is shown in Figure 4. The confinement weights were used to help confine the shrapnel and hot gases within the arming device housing. In all ten tests, the CH-6 leads were undisturbed. The housings remained intact with an indentation below each detonator. The septums which separate the leads from the interior of the housing

were undisturbed. Additional safety tests using simulated arming device hardware are reported in reference (a).

Small Angular Misalignment Tests. Tests to determine the effect of small angular misalignments between the detonators and leads were made with standard Mk 57 Mod 1 Detonators. Ten tests were made for the condition where the edges of the detonator and the lead with respect to the centerline of the arming device had an overlap angle of 5.5°. An additional five tests were made for the condition of tangency between the edges of the detonators and leads. Three tests each were made for separation angles of 3.5° and 8.5° between the edges. The test set-up was as shown in Figure 3. Results of these tests were as follows:

Overlap angle of 5.5°: Both CH-6 leads fired in each of the ten tests, and produced average dents between 30.8 and 33.0 mils. It was assumed that these values were lower than in the fully armed tests because the leads did not react to a stable high order detonation. Also, fragmentation of the lead housing was not as great as observed for the fully armed position.

Tangency: In one of the five tests, one of the two leads reacted vigorously enough to produce a 24.5-mil indentation. The other lead was assumed to have been initiated but no indentation occurred from its explosion. The leads of the four remaining tests were initiated as evidenced by consumption of the explosive and charring of the surface of the housing in contact with the steel block. However, the leads did not react vigorously enough to produce indentations.

Separation Angle of 3.5°: In all three tests the lead cavities were slightly distorted and the septums above the leads were ruptured. There was no lead explosive found; however, there was no evidence to show that the leads were initiated in that there was no charring of the parts.

Separation Angle of 8.5°: In all three tests the leads were mechanically damaged, with damage varying from flaking of the bottom of the lead to complete crushing. There was no evidence of the leads being initiated, and the septums above the leads remained intact.

The results of these small angular misalignment tests showed that a small misalignment between the axial centerlines of the detonators and leads did not degrade the reliability of the arming device in that the leads would still yield a high order output. This is essential, since alignment of the two centerlines is not exact when the arming device is rotated from the safe to the armed position due to tolerances within the arming device and exploder. The tests also showed that as the detonators moved slightly toward the safe position from the point of tangency, firing of the detonators resulted in very little damage to the leads. This indicates that the angular position where firing of the detonators results in

the arming device remaining in a safe condition; i.e., no charring or burning of the leads, is closer to the armed position than the safe position.

LEAD TO BOOSTER RELIABILITY TESTS. Originally, fifty arming devices had been allocated for lead to booster reliability tests. It was intended that an extensive test program be conducted where the sensitivities of the lead and/or booster explosive material would be varied in order to determine the reliability of the transfer.

In order to get a feel for how much reserve was in the explosive train design, four firings were made with acrylic plastic spacers, the same diameter as the booster, between the output end of the leads and the top of the boosters. The test configuration and hardware were the same as will be described for the arming device output tests. The spacers used were one-sixteenth, one-eighth, three-sixteenths, and one-quarter inch thick; and it was anticipated that one of these thicknesses would attenuate the lead output enough to prevent the booster from initiating. However, high order booster detonations occurred in all cases. It was, therefore, concluded that the reliability of the lead to booster transfer was high enough so that further testing was not necessary.

ARMING DEVICE OUTPUT TESTS. Forty arming devices were fired to obtain steel dent data for inclusion in the weapon specification. The test set-up is shown in Figure 5. The rod attached to the arming device coupler and the strings were used to remotely arm and disarm the arming device. The dent blocks used were cold-rolled AISI 1020 steel, with a hardness of Rockwell B70-90 and with dimensions of 8" x 8" x 3". So as to obtain the dent dispersion due to loading tolerances on the booster drawing, half of the arming devices used in this test had boosters pressed to the minimum density allowed, and half to the maximum density allowed. Twenty firings were made at ambient temperature, and ten each at -65°F and +160°F. Each group had half high and half low density boosters. In addition, 12 arming devices which had been through environmental tests were fired. These devices had nominal density boosters and were fired at ambient temperature. A summary of the results of all output firings is presented in Table I.

EXPLOSIVE LOADED TESTS. Seventeen arming devices were explosive loaded, X-rayed, and functionally checked; and subjected to the following environmental and safety tests.

Thermal Shock. Three arming devices were subjected to the thermal shock test of MIL-STD-331. Post test X-ray, inspection, and check-out revealed no degradation of the arming devices.

Temperature & Humidity. Three arming devices were subjected to the 28-day temperature and humidity test of MIL-STD-331. Post test X-ray, inspection, and check-out revealed no degradation.

Transportation Vibration. Three arming devices were subjected to the transportation vibration test of MIL-STD-331, Test Procedure I. Each arming device was vibrated in three mutually perpendicular axes, and one arming device each was tested at a temperature of -65°F, ambient, and +160°F. Post test X-ray, inspection, and check-out revealed no degradation.

Water Entry Shock. Three arming devices were subjected to a series of shocks simulating the water entry shock of an air or deck launched torpedo. One arming device was shocked in a direction corresponding to the axial direction of a torpedo at 150 g's peak, 8 millisecond half-sine pulse duration, at a temperature of -65°F. The other two arming devices were shocked in three mutually perpendicular axes at a level of 70 g's peak, 20 millisecond half-sine pulse duration, with one arming device each at -20°F and +135°F. Post test X-ray, inspection, and check-out revealed no degradation.

Shipboard Shock. One arming device was subjected to a shipboard shock test at ambient temperature. The device was shocked in three mutually perpendicular axes: in two axes at a level of 200 g's peak, 3.5 millisecond half-sine pulse duration, and in the third axis at 50 g's peak, 4.5 millisecond half-sine pulse duration. Post test X-ray, inspection, and check-out revealed no degradation.

Jolt. Two arming devices were subjected to the jolt test of MIL-STD-331, one in the axial direction, and one in the transverse direction. There was no visual indication of damage to the arming devices after the test, and after breakdown examination and X-ray they were judged to be safe to handle and dispose of. The X-rays did show that the booster pellet of one of the devices had cracked; however, both arming devices were subsequently fired and had normal steel dent outputs.

Jumble. One arming device was subjected to the jumble test of MIL-STD-331. Examination and X-ray revealed the only damage to the device was bent contact pins (see Fig. 6), and the arming device was judged safe to handle and dispose of.

Forty-Foot Drop. Three arming devices were subjected to a forty-foot guided drop test. The devices were assembled to a carriage and dropped forty feet onto a steel anvil. Two arming devices were dropped in the axial direction, one with the booster up and one with the booster down; and one arming device was dropped in the horizontal position. All three devices were judged to be safe to handle and dispose of after the test. Typical damage to the arming devices is shown in Figures 7 and 8.

Forty-Foot Drop with Mk 19 Exploder. One arming device was attached to a Mk 19 Exploder and subjected to a forty-foot drop test. The test was conducted so that the arming device impacted on the booster, creating a worst-case situation for damage to the booster and for the possibility of driving the exploder bore rod into the booster. After the test the booster was severely deformed (see Fig. 9), but inspection indicated the arming device was safe to

handle and dispose of. The bore rod did not penetrate into the booster cavity.

DETONATOR TESTS

As part of the development of the arming device, it was decided to include a steel dent output test in the Detonator Mk 57 Mod 1 specification, MIL-D-19151. The steel dent test replaced the antiquated sand bomb output test. To obtain the needed data, fifty-four Mk 57 Mod 1 Detonators were fired at -65°F, ambient, and +160°F with the following results:

	Ambient	+160°F	-65°F
Number of shots	25	14	15
Average Dent (Mils)	24.6	26.9	20.7
Standard Deviation (Mils)	0.5	1.2	1.0
Maximum Dent (Mils)	25.5	29.9	22.7
Minimum Dent (Mils)	23.4	25.4	18.2

PACKAGING TESTS

The packaging used on the Mods 3 and 4 of the Mk 2 Arming Device is shown in Figure 10. It consists of a screw top can containing the arming device and the hardware necessary to assemble it to an exploder; an "O" ring, retaining ring, wave washer, and arming wire. The dunnage used to package these items consists of a steel safety cup, four pieces of sponge rubber, a plastic coupler spacer, and an indeterminate number of fiberboard spacers. All of these parts had to be assembled in the proper configuration or the assembly would not fit into the can. Past experience with this container has shown that many times fleet return arming devices and dunnage would be assembled improperly or one or more of the many pieces of dunnage would be omitted. This resulted in a packaged arming device which was more susceptible to damage than one which was properly packaged.

As a result of the above, it was felt desirable to change the arming device packaging to eliminate most of the dunnage and to minimize the possibility of misassembly. The design which was chosen (see Fig. 11), was a two-piece expanded bead polystyrene foam "clamshell." The arming device, retaining ring, and wave washer are captured between the two halves, which are secured together by tape; while the "O" ring, arming wire, and a package of desiccant are held in a cavity in the bottom of the assembly with tape. This assembly is then placed in the same screw top can as was previously used.

One of the concerns about the new packaging design was that it eliminated the safety cup, and it was not known what effect this would have should the detonators fire in the safe position while the arming device was in its container. Therefore, a test was conducted

to compare the new and the old packaging design when the detonators were fired in the safe position. One arming device was secured in a safety cup and packaged with dunnage per the old drawing while another arming device was secured in a clamshell and packaged per the new design. Both of the Mk 57 Mod 1 Detonators were fired in each arming device.

The results of the tests were similar. In the old packaging, the arming device separated from the safety cup and blew the top off the can. The arming device body and the shrapnel resulting from the internal components were not contained in the can. In the new packaging, the detonators blew the top of the clamshell and the lid of the can off. The shrapnel left the can, but the arming device housing was contained.

Since neither design showed a great advantage in preventing damage should the detonators fire while the arming device is in its can, the polystyrene foam clamshell design was chosen to be used for packaging the Mk 2 Mod 5 Arming Device.

PROBLEMS

As previously reported, the testing of the arming devices progressed very smoothly with no problems being exposed. However, two problems surfaced during the building and initial testing of the hardware which should be mentioned. Both of these areas are shown in an X-ray of the arming device (see Fig. 12).

The first of the problems was detonator pins being bent as the arming device was rotated into the safe position shunts. This was caused by a combination of two things: the detonator pins themselves not being straight when inserted into the arming device, and excessive force required to rotate the detonators into the shunts. The solution to the non-straight detonator pins is obvious: ensure that the pins are straight or even toed-in prior to insertion into the arming device. The excessive force exerted by the shunts was caused by the fact that they are the same material thickness but have a much shorter span than the contacts which are engaged in the armed position. Because of this they require three times the force to cause the same deflection as the armed position contacts. This problem was solved by decreasing the thickness of the shunt material so that the force required to deflect the shunts was the same as the force required to deflect the contacts.

The second problem as shown in Figure 12 was the cracking of the CH-6 booster pellets during pressing. This problem was eventually solved by the use of mold release and designing the mold such that there was a slight undercut where the mold cavity meets the radiused heel as shown in Figure 13. If there is no undercut, the stresses at this point get extremely high and start a crack which propagates across the pellet.

CONCLUSIONS

Based on the results of the development test program described in this report, the Naval Ordnance Laboratory recommended to the Naval Ordnance Systems Command by reference (d) that the Arming Device Mk 2 Mod 5 be released to limited production. The release was limited in that it was recommended that the first three hundred arming devices produced be delivered to the Naval Ordnance Laboratory for a formal technical evaluation program.

REFERENCES

(a) NOLTR 70-120, William C. Jones, Investigation of the Feasibility of Incorporating a Lead in the Arming Device Mk 2 (U), 25 June 1970 (Conf)
(b) Naval Ordnance Systems Command Parts List 2506575
(c) Naval Ordnance Systems Command Weapons Specification 13601
(d) NOL ltr 512:WCJ:mc 8550 Ser 5085 of 3 Sep 1971 to NAVORDSYSCOM

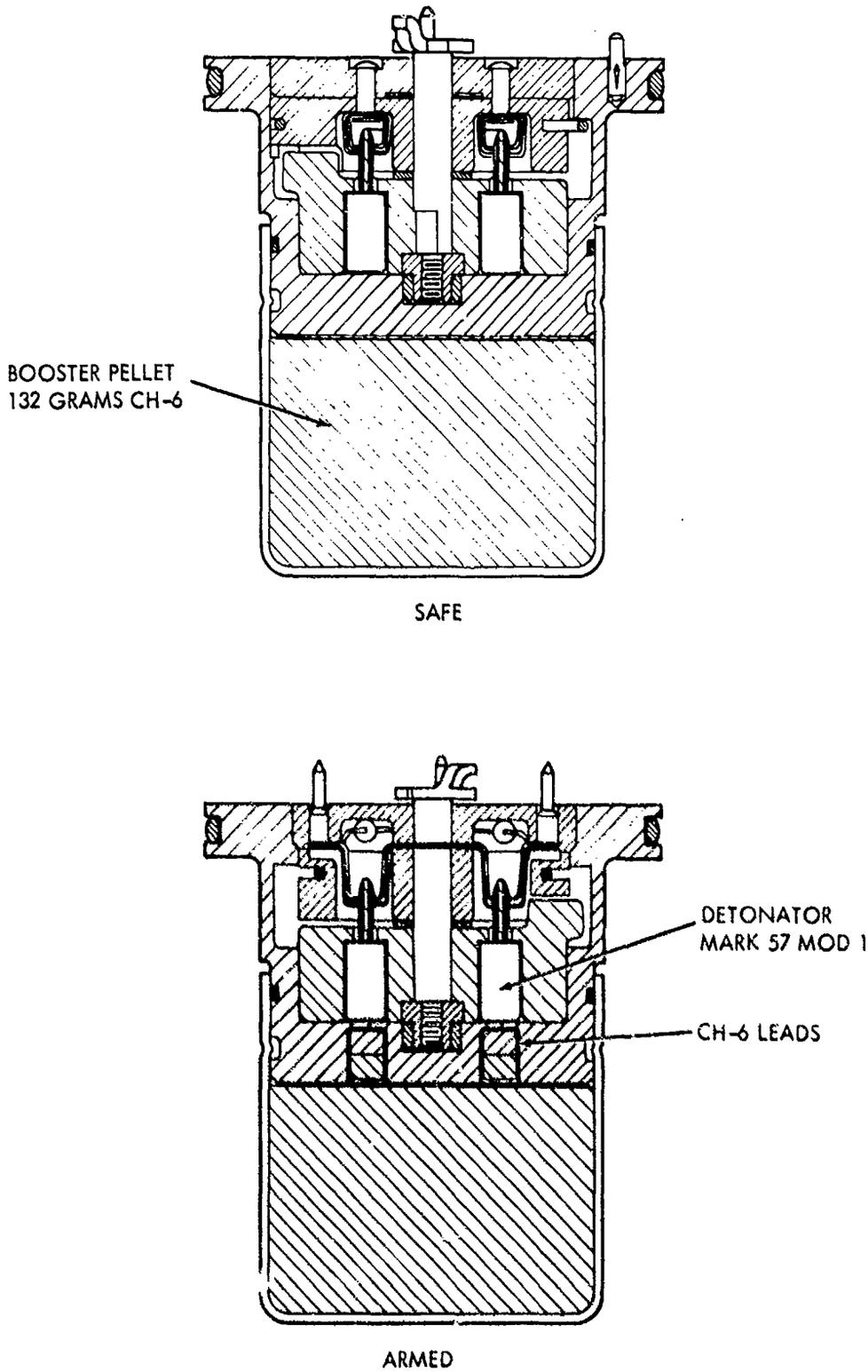

FIG. 1 ARMING DEVICE MK 2 MOD 5

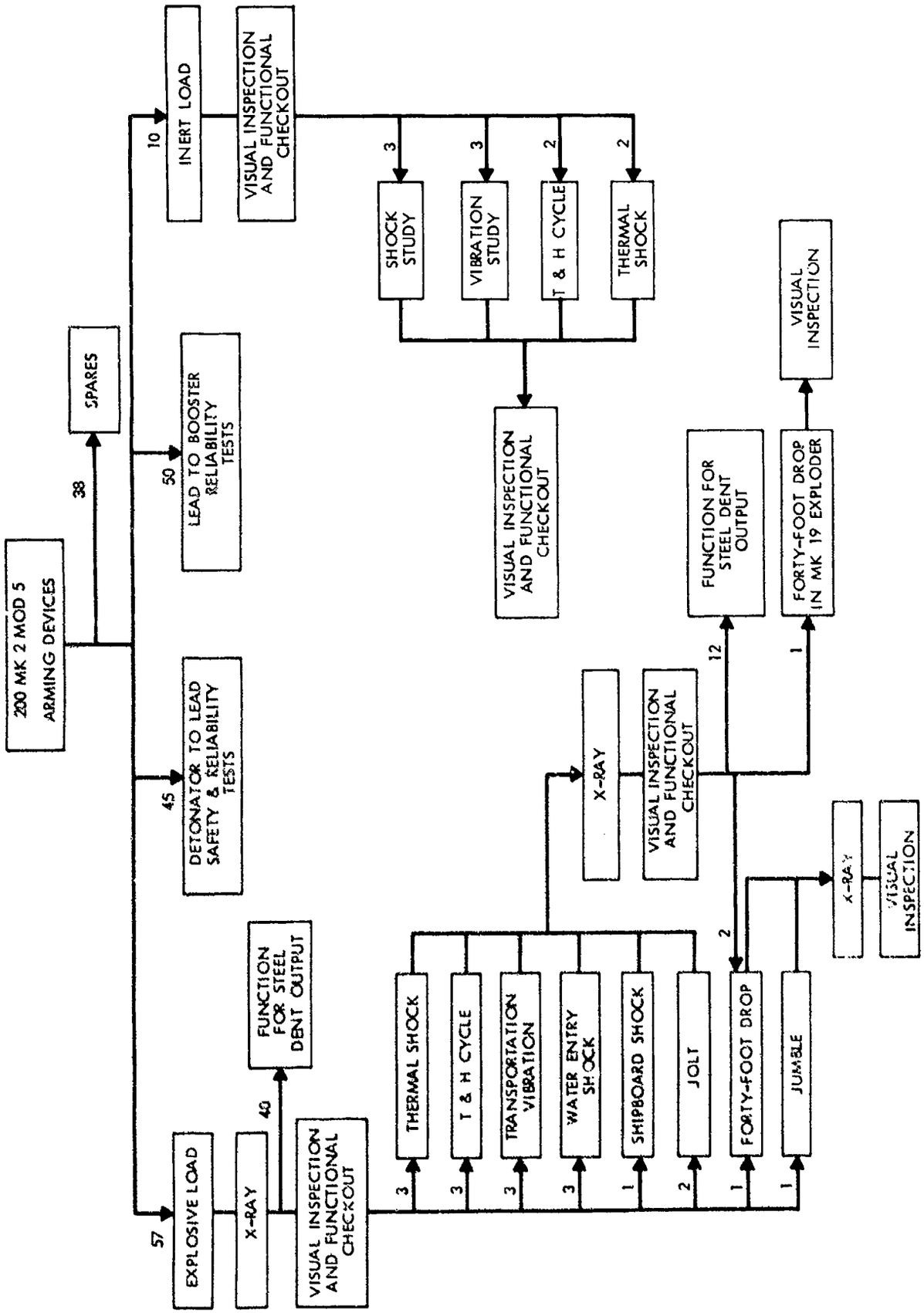

FIG. 2 DEVELOPMENT TESTS

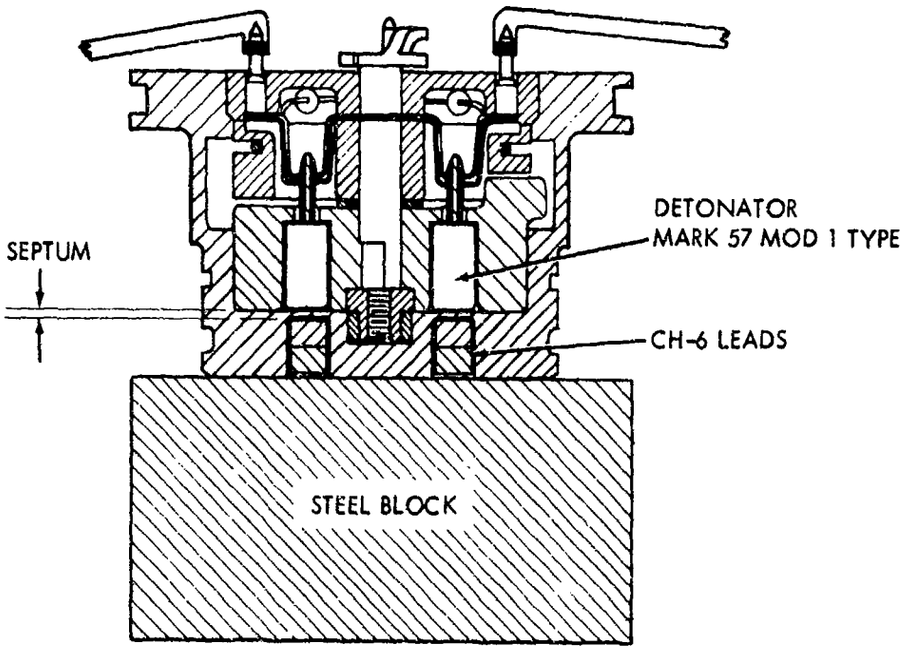

FIG. 3 DETONATOR TO LEAD RELIABILITY TEST CONFIGURATION

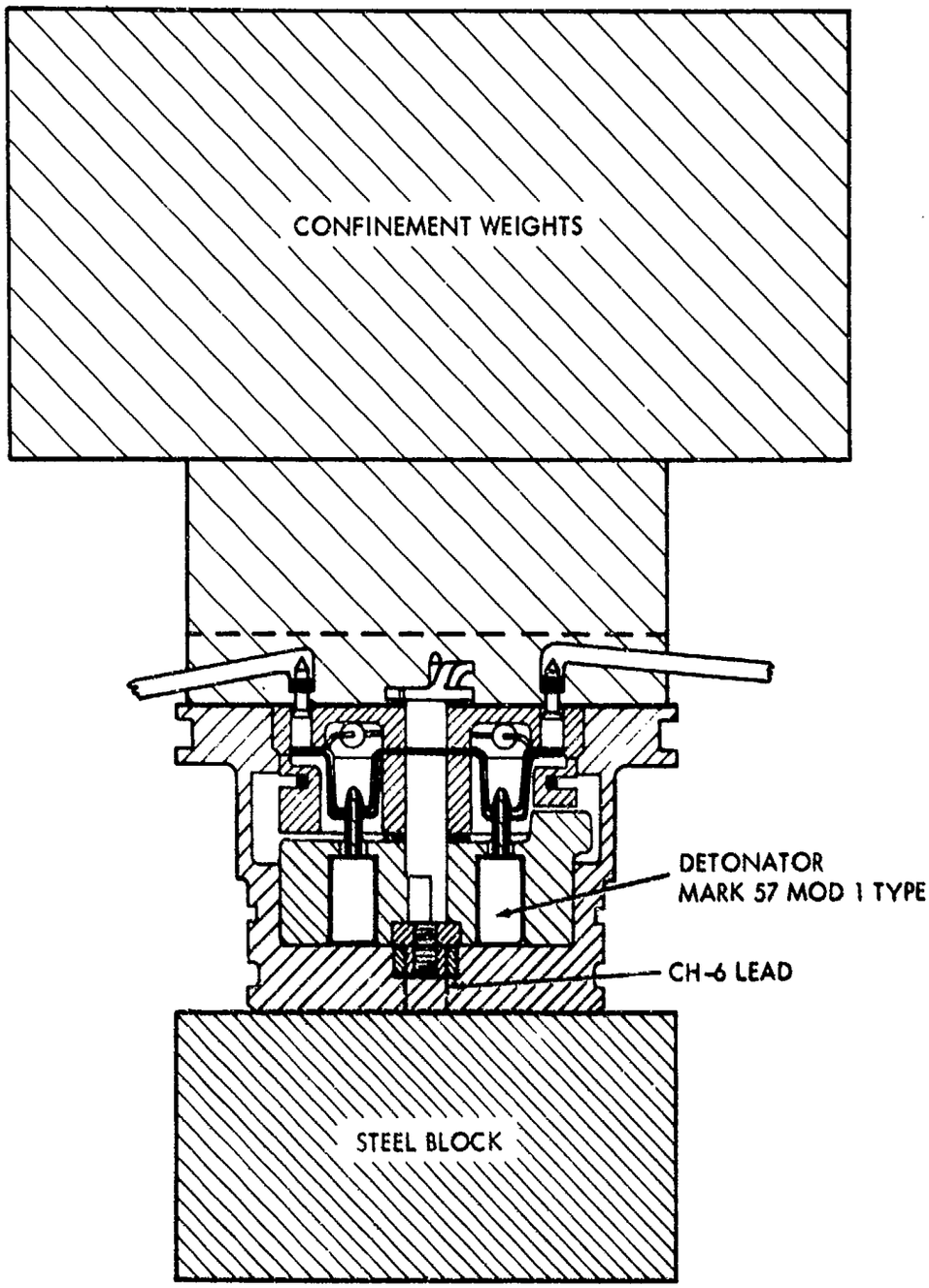

FIG. 4 DETONATOR TO LEAD SAFETY TEST CONFIGURATION

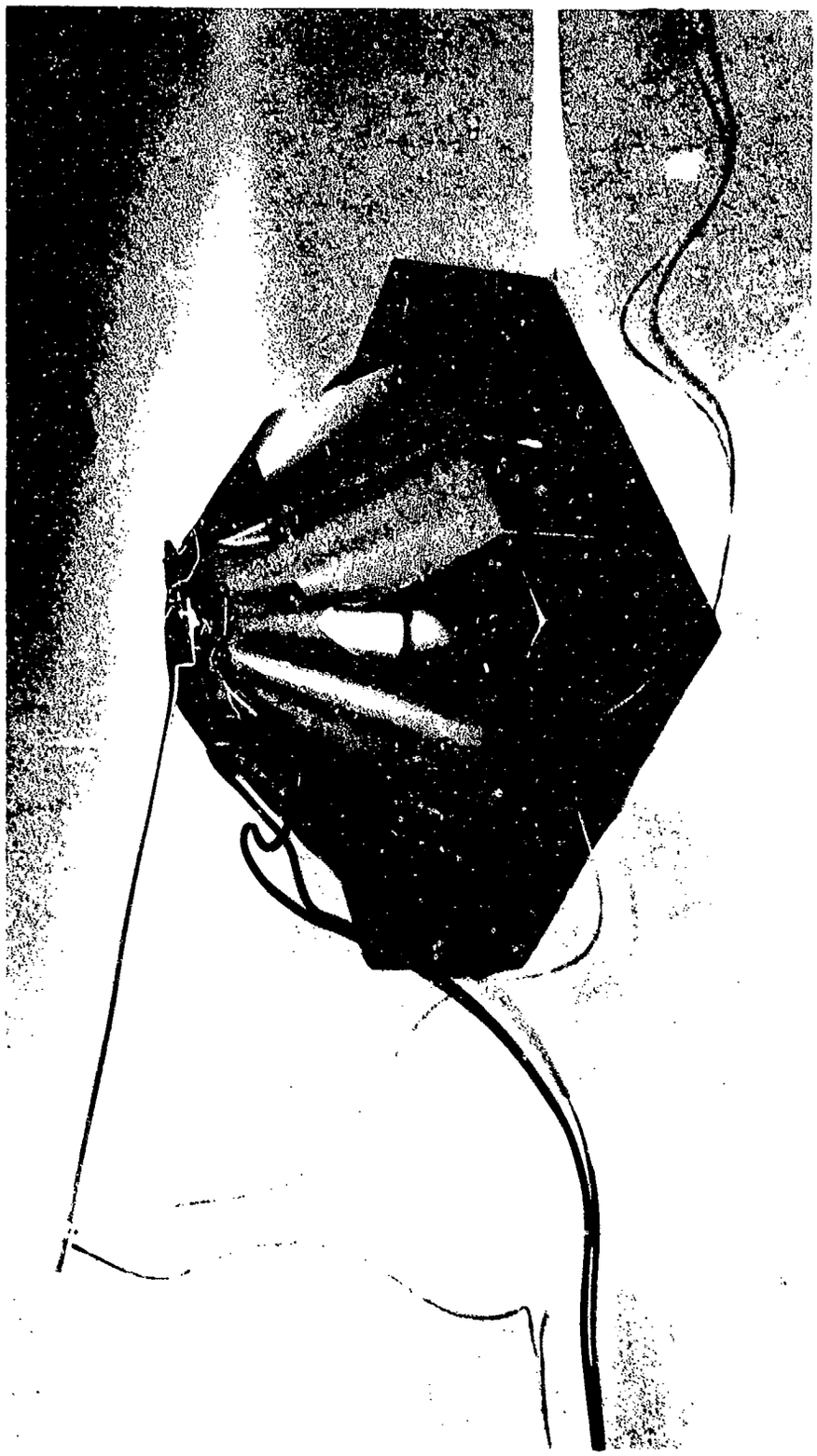

FIG. 5 ARMING DEVICE OUTPUT TEST CONFIGURATION

FIG. 6 DAMAGE TO ARMING DEVICE AFTER JUMBLE

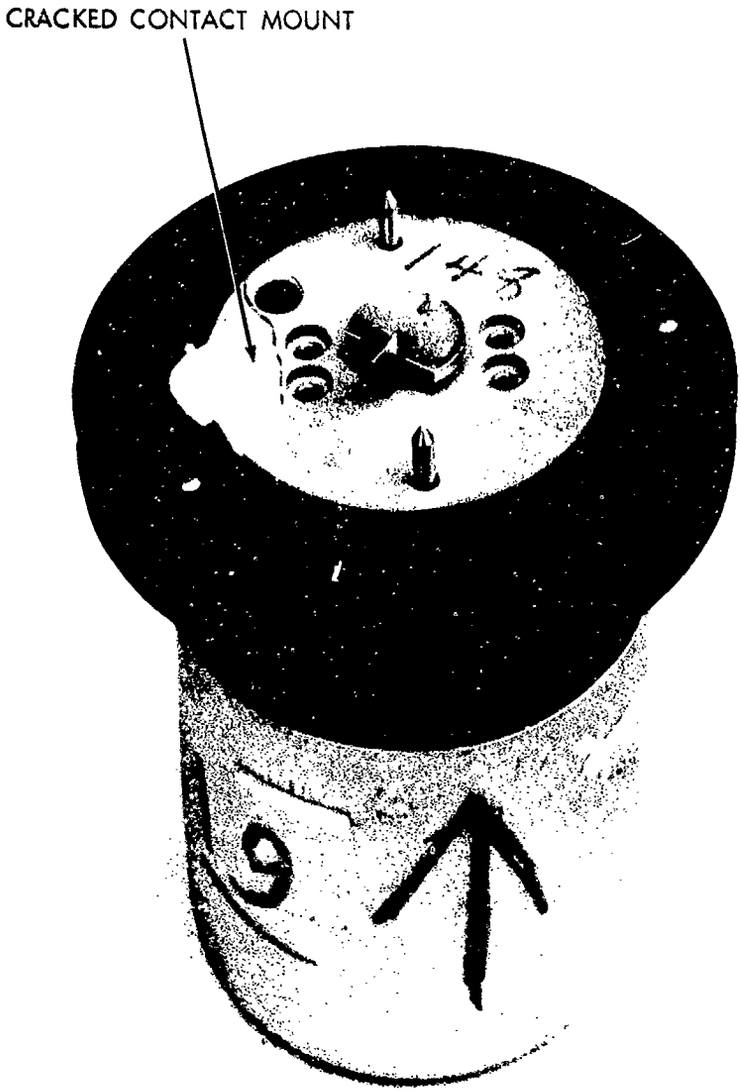

FIG. 7 DAMAGE TO ARMING DEVICE AFTER 40 FOOT DROP

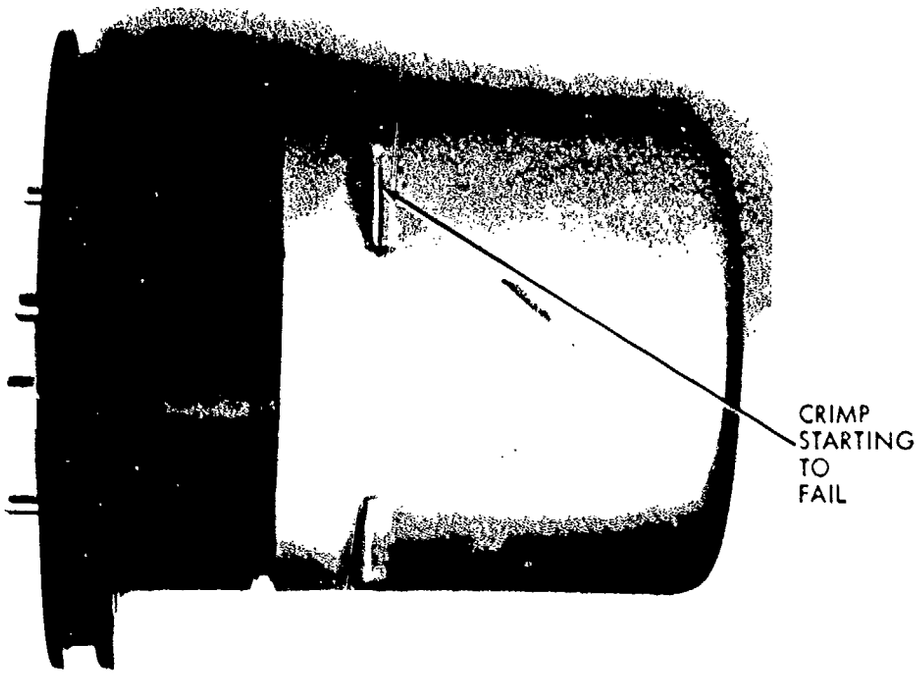

FIG. 8 DAMAGE TO ARMING DEVICE AFTER 40 FOOT DROP

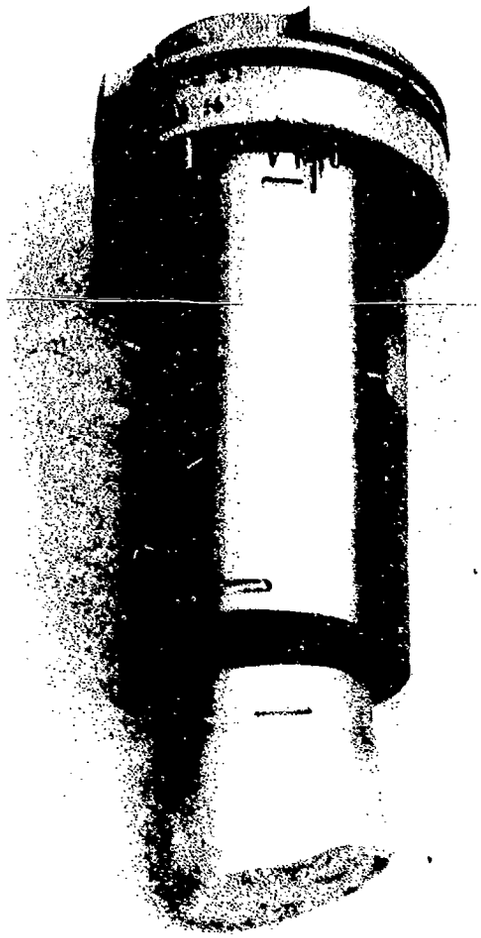

FIG. 9 DAMAGE AFTER 40 FOOT DROP IN MK 19 EXPLODER

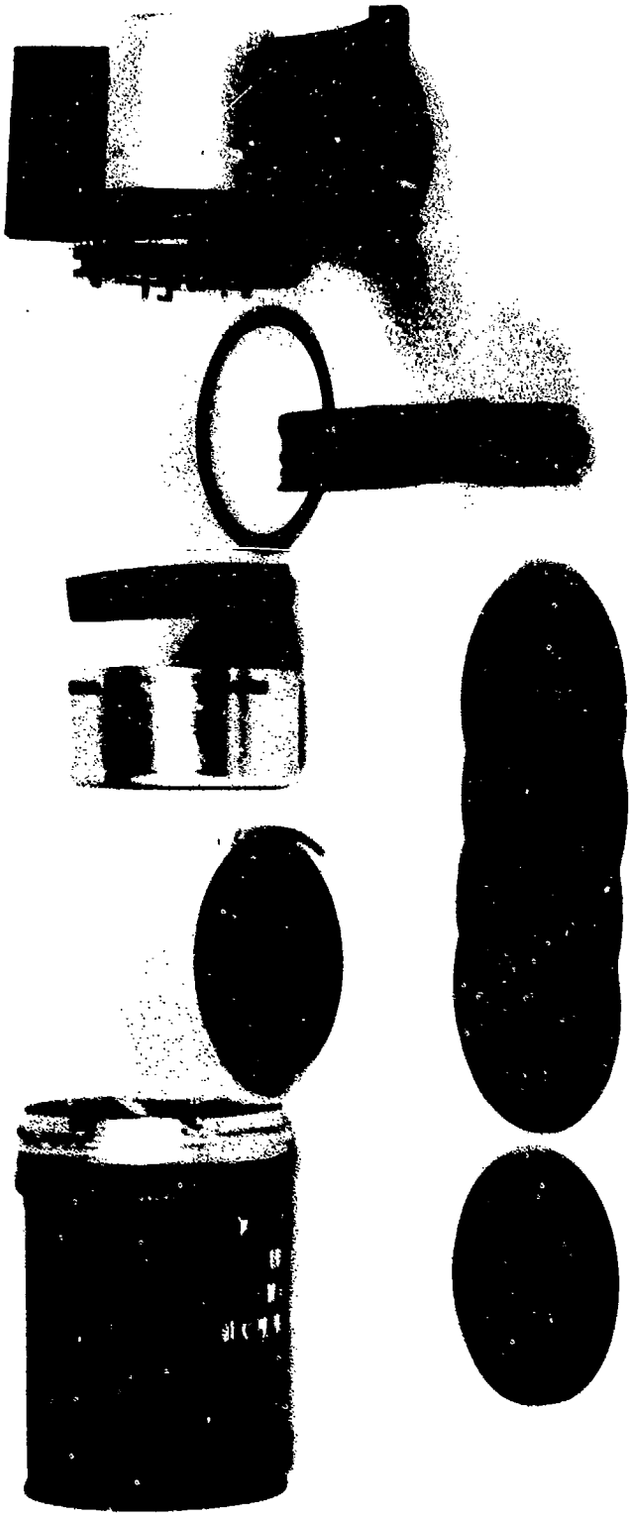

FIG. 10 OLD PACKAGING

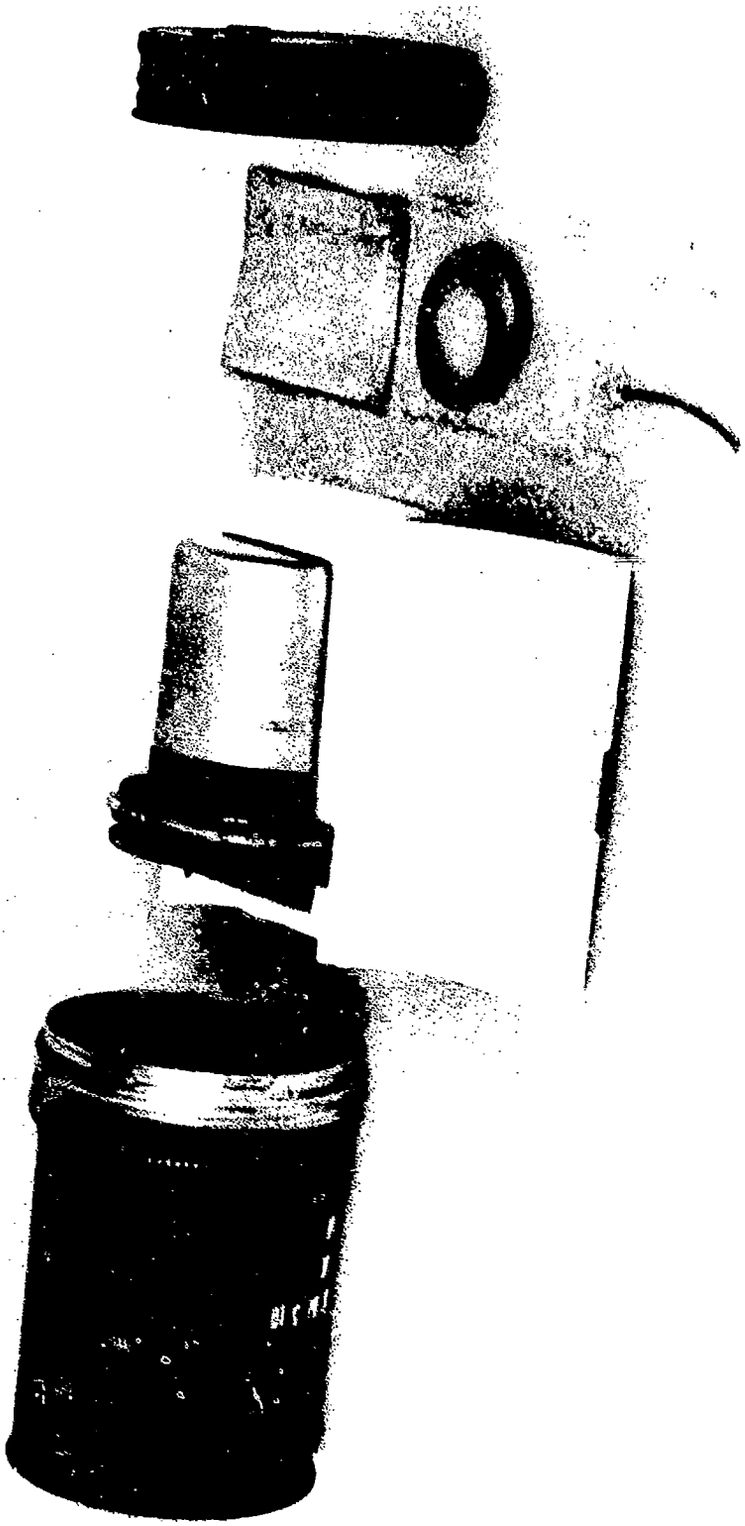

FIG. 11 NEW PACKAGING

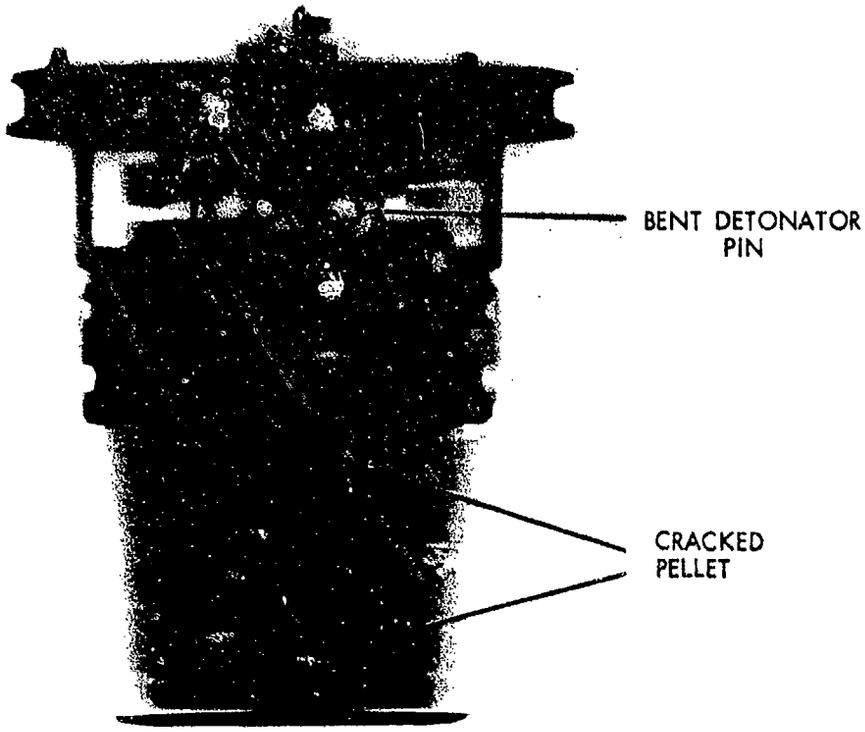

FIG. 12 PROBLEM AREAS

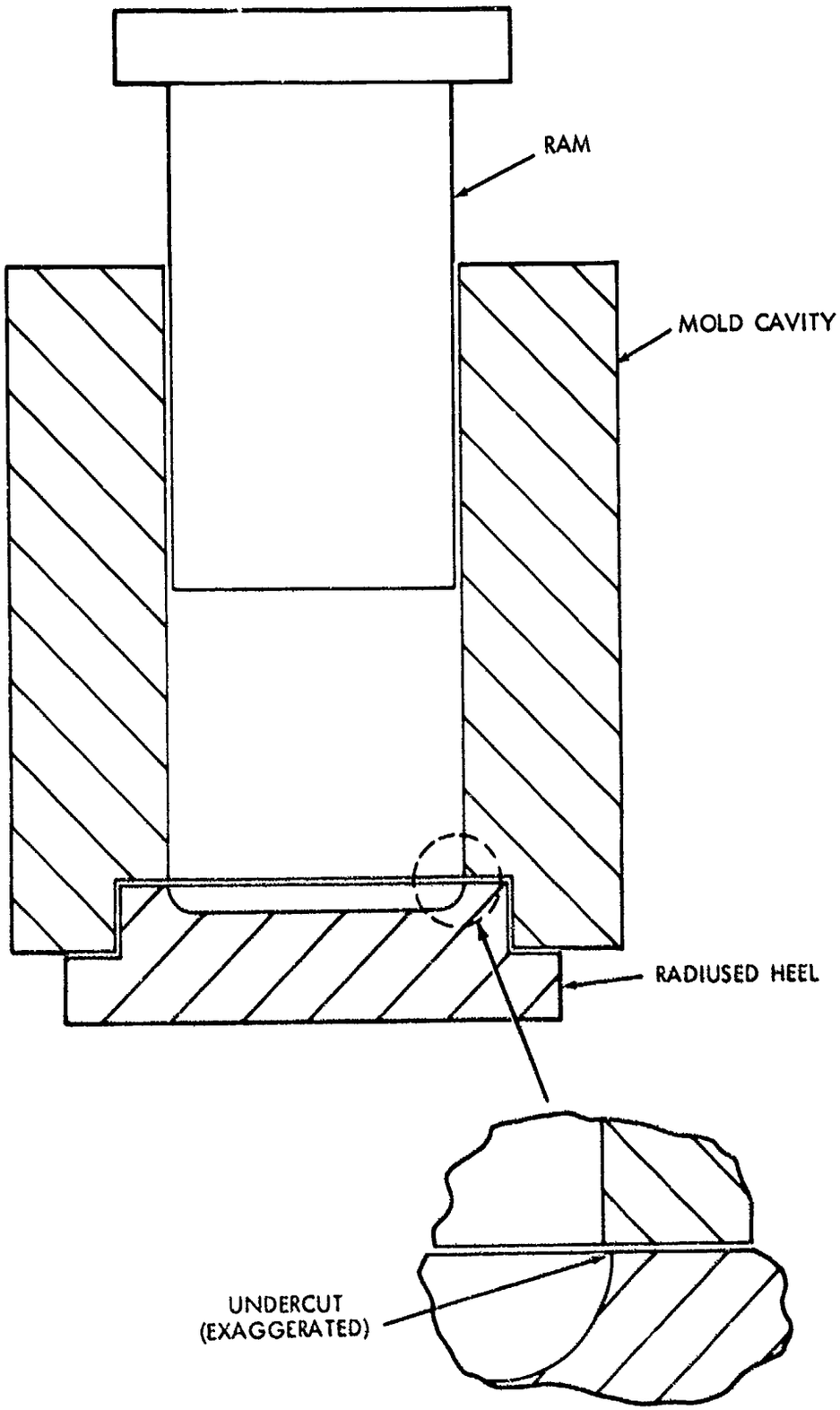

FIG. 13 BOOSTER MOLD

TABLE I
ARMING DEVICE OUTPUT TEST RESULTS

	TEMPERATURE			
	-65°F	AMBIENT	+160°F	AMBIENT*
NUMBER OF FIRINGS	10	20	10	12
AVERAGE DENT (MILS)	236	274	308	264
STANDARD DEVIATION (MILS)	14.2	11.4	19.9	5.3
MAXIMUM DENT (MILS)	256	296	332	277
MINIMUM DENT (MILS)	218	258	283	256

*THESE ARMING DEVICES HAD BEEN THROUGH ENVIRONMENTAL TESTS.

UNCLASSIFIED
Security Classification

DOCUMENT CONTROL DATA - R & D

(Security classification of title, body of abstract and indexing annotation must be entered when the overall report is classified)

1. ORIGINATING ACTIVITY *(Corporate author)*

Naval Ordnance Laboratory, White Oak

2a. REPORT SECURITY CLASSIFICATION

UNCLASSIFIED

2b. GROUP

3. REPORT TITLE

(6) Engineering Development of the Arming Device Mk 2 Mod 5,

4. DESCRIPTIVE NOTES *(Type of report and inclusive dates)*

--

5. AUTHOR(S) *(First name, middle initial, last name)*

(10) William C. Jones

6. REPORT DATE

(11) 14 Mar[redacted]72 (12) 31p.

7a. TOTAL NO. OF PAGES

27

7b. NO. OF REFS

4

8a. CONTRACT OR GRANT NO.

b. PROJECT NO. NOL-419/ORD-0442

c.

d.

9a. ORIGINATOR'S REPORT NUMBER(S)

(14) NOLTR-72-76

9b. OTHER REPORT NO(S) *(Any other numbers that may be assigned this report)*

None

10. DISTRIBUTION STATEMENT

B. Distribution limited to U. S. Government agencies only; Test and Evaluation; date statement applied 14 March 1972. Other requests for this publication must be referred to NOL Code 512.

11. SUPPLEMENTARY NOTES

12. SPONSORING MILITARY ACTIVITY

Naval Ordnance Systems Command
Washington, D. C.

13. ABSTRACT

The Arming Device Mk 2 Mod 5 was developed primarily to improve the reliability of the explosive train of the Mk 2 Arming Device. Two hundred arming devices were fabricated and subjected to an extensive development test program. As a result of that test program, the Arming Device Mk 2 Mod 5 was recommended for release to production.

AD 1750(50)

DD FORM 1 NOV 65 1473 (PAGE 1)

S/N 0101-807-6801

UNCLASSIFIED
Security Classification

UNCLASSIFIED
Security Classification

14. KEY WORDS	LINK A ROLE	LINK A WT	LINK B ROLE	LINK B WT	LINK C ROLE	LINK C WT
Arming Device						
Development Tests						
Explosive Train						
Mark 2						

DD FORM 1 NOV 65 1473 (BACK)
(PAGE 2)

UNCLASSIFIED
Security Classification