UNCLASSIFIED

AD NUMBER
AD893722
NEW LIMITATION CHANGE
TO Approved for public release, distribution unlimited
FROM Distribution authorized to U.S. Gov't. agencies only; Test and Evaluation; MAR 1972. Other requests shall be referred to Naval Civil Engineering Laboratory, Port Hueneme, CA 93043.
AUTHORITY
usncbc ltr, 24 oct 1974

THIS PAGE IS UNCLASSIFIED

AD 893722

Technical Report

R 760

NAVAL CIVIL ENGINEERING LABORATORY
Port Hueneme, California 93043

D D C
APR 26 1972

Sponsored by
NAVAL FACILITIES ENGINEERING COMMAND

March 1972

AD No.
DDC FILE COPY

CATHODIC PROTECTION KIT FOR FLEET MOORINGS

Distribution limited to U.S. Government agencies only; Test and Evaluation; March 1972. Other requests for this document must be referred to the Naval Civil Engineering Laboratory.
Port Hueneme Calif 93043

CATHODIC PROTECTION KIT FOR FLEET MOORINGS

Technical Report R-760

YF 51.543.006.01.010

by

R. W. Drisko

ABSTRACT

A kit was developed to reduce corrosion-related maintenance costs by cathodically protecting Fleet moorings. Maintenance costs for Fleet moorings in the Naval Shore Establishment might be reduced by $360,000 annually if the moorings were cathodically protected by this system. The kit consists of Special-D zinc anodes, wire rope, and special fittings. It can be used either to install a cathodic protection system in a Fleet mooring in situ or to replace consumed link-anodes in situ. A guide is included for use of this kit by field activities.

WHITE SECTION
BUFF SECTION
ANNOUNCED
AVAILABILITY CODES
SPECIAL
B

Distribution limited to U.S. Government agencies only; Test and Evaluation; March 1972. Other requests for this document must be referred to the Naval Civil Engineering Laboratory.

INTRODUCTION

Field activities of the Naval Facilities Engineering Command (NAVFAC) have encountered considerable difficulty in obtaining adequate protection from corrosion for buoys and ground tackle in Fleet moorings. Much of the buoy deterioration occurs where the structure is continually immersed in seawater—the only area where cathodic protection from corrosion can be effective. Mooring chains are several times more costly in initial price and maintenance than mooring buoys. As a consequence, the Naval Civil Engineering Laboratory (NCEL), at the request of NAVFAC, developed a cathodic protection system for protecting the underwater portion of mooring buoys and their ground tackle.

The development of an effective system for cathodically protecting Fleet moorings is described in NCEL Technical Report R-702.* With this system, sacrificial zinc anodes are located both on the buoy and the ground tackle. On riser-chain-type buoys, the anodes are located in sea chests built into the underwater portion of the buoy so that they cannot be damaged by Naval vessels utilizing the mooring. On the ground legs, special zinc anodes cast on steel links actually become part of the chains. In order to provide the electrical continuity necessary for spreading the protection to all parts of the ground tackle, a wire rope is woven back and forth through each leg and periodically secured to it by silver soldering or clamping with metal pipe clamps.

This system has given complete protection from corrosion to a four-legged Class B mooring in San Diego Bay for 4-1/2 years. During that time only about 10% of the zinc on the link anodes was consumed. A cost analysis showed that maintenance costs for Fleet moorings could be greatly reduced by using such a cathodic protection system. An additional investigation was subsequently undertaken to further reduce maintenance costs by (1) developing a simple anode kit by which anodes could be more easily and economically installed in situ and (2) determining if fewer anodes could give complete and long-lasting protection. This report describes this additional investigation.

---

* Naval Civil Engineering Laboratory. Technical Report R-702: Cathodic protection system for Fleet moorings, by R. W. Drisko. Port Hueneme, Calif., Nov 1970. (AD 715346)

ANODE DESIGN

A special zinc anode was fabricated for NCEL by Quemetco, Inc. of Seattle, Washington, the fabricator of the previously tested anodes cast on chain links. This new anode, called Special-D, is a modification of Quemetco's 80-500 anode (denoting a cross-sectional area of 80 in.^{2} and a nominal weight of 500 pounds). The 80-500 anode is prepared by casting zinc into a mold measuring 24 inches in length, 9 inches in height, 10 inches across the top, and 8 inches along the bottom. In the Special-D modification (Figure 1), a 3/4-inch galvanized steel pipe passes through the center of the zinc casting. An insulated copper wire is passed through the pipe core, bared at each pipe end, and soldered to the pipe ends; then the pipe is potted with epoxy to reduce stress on the connections. Each of the insulated leads extend about 30 feet from the anode. The complete anode is secured to a wooden pallet for easy handling by a fork-lift truck.

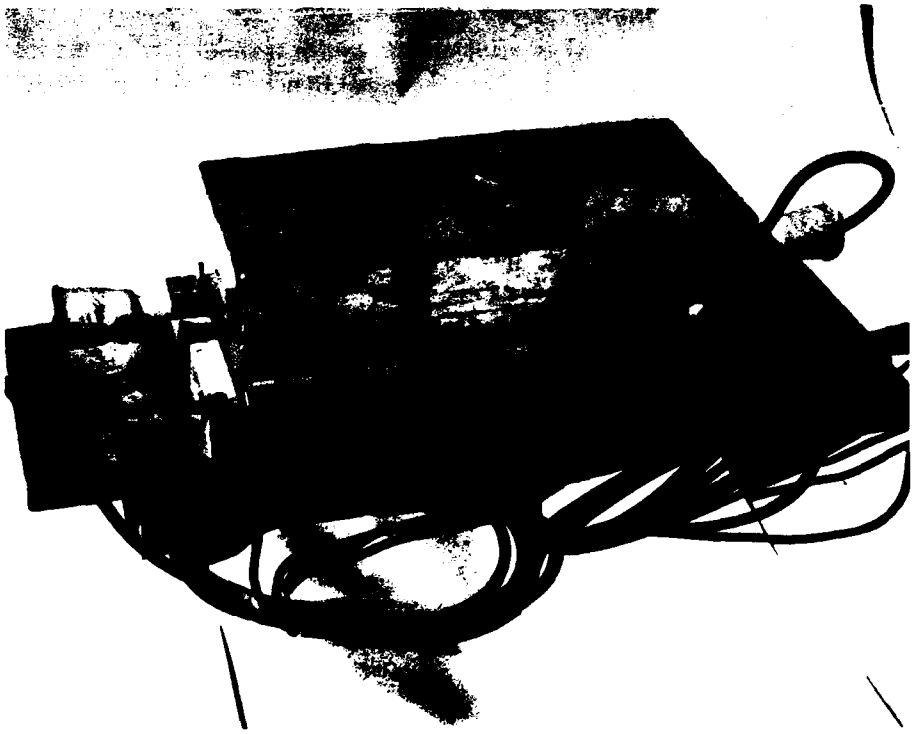

Figure 1. Special-D anode.

ANODE CONNECTOR

A simple connector was needed so that a diver could rapidly and securely join the Special-D anode to the ground legs of a mooring. Because distribution of the cathodic protection and easy installation of the anode were important, it seemed better to join the anode to the wire rope than to the chain itself. Of the several connection systems investigated, a 35116 Hinjon Junior tee-parallel tap (Figure 2) of the Thomas and Betts Company, Elizabeth, New Jersey, was by far the easiest to use. With this connector, the anode lead and the larger diameter wire rope could be joined rapidly by tightening one bolt with a socket or a blade-type screwdriver.

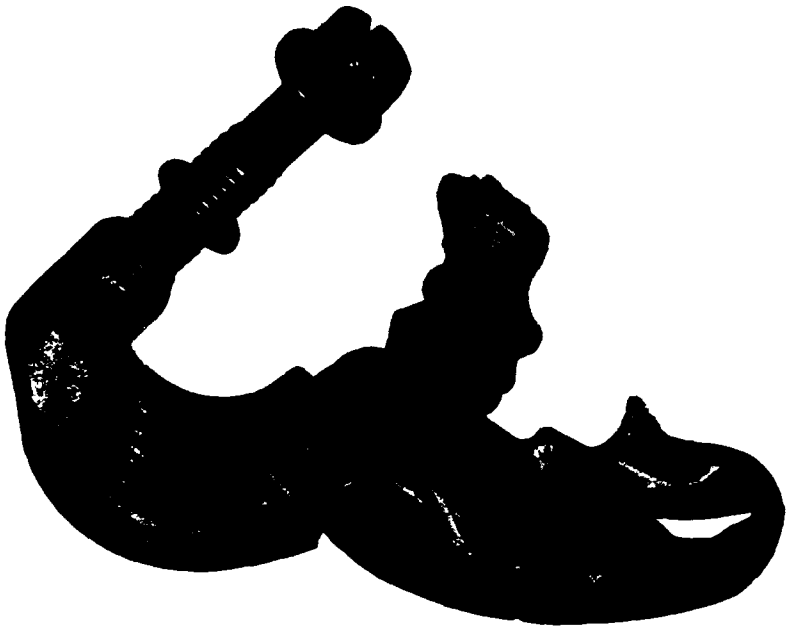

Figure 2. 35116 Hinjon Junior tee-parallel tap.

FIELD TESTING OF KIT

A field test of the Special-D cathodic protection kit was conducted on a five-legged Class B mooring in San Diego Bay. A PWC, San Diego diving boat and a four-man crew were utilized in these tests. In the first phase of the

test, a piece of 5/8-inch-diameter galvanized steel wire rope was woven back and forth through approximately every eighth link of one of the ground legs from a point 10 feet from the ground ring to the concrete sinker—a distance of 125 feet. About every eighth link, the coal tar coating was scraped from the chain, and the wire rope was secured to it using a metal pipe clamp. The Special-D anode was then lowered to the bottom (Figure 3) at a point about 40 feet from the ground ring and 6 feet from the test leg. The diver joined the anode leads to the wire rope (Figure 4) to complete the initial installation.

One hour later, a potential profile of the ground leg was made using a portable field meter and two 100-foot leads. A silver/silver chloride reference half-cell was attached to one of these leads and a steel pick to the other. The instrument was read at the surface while a diver made electrical contact with the pick on the mooring chain; the half-cell was held 1 foot from the point of contact. The readings, taken about every 8 feet, are listed in Table 1.

Since a potential of -800 mv or above with respect to a silver/silver chloride reference half-cell is considered necessary to give full protection from corrosion to steel, not only was all of the chain area with the attached cable protected, but also areas beyond both ends of the cable. Because of the immediate and full protection obtained, additional testing was done to determine whether the entire ground leg could be protected with the single Special-D anode.

A second length of 5/8-inch galvanized steel wire rope was joined to the original continuity cable with a pair of U-shaped wire rope clips. The additional wire rope was then woven back and forth through the remainder of the ground leg to a point 10 feet from the anchor (Figure 5). It was decided not to attempt to protect the anchor, because corrosion of it presented no problem. Again pipe clamps were used to connect the extra length of wire rope to the chain.

On the following day a potential profile was taken of the buoy, riser-chain, ground ring, and test leg. The readings, taken about every 8 feet, are listed in Table 2. It can be seen from this table that the buoy, riser-chain, ground ring assembly, and entire 225 feet of ground leg, but not the anchor, were receiving full protection.

Six weeks later another potential profile was taken; the readings are listed in Table 3, and are considerably lower than those of Tables 1 and 2. Apparently, the cathodic protection extended itself to ground legs without wire ropes, thereby causing the single anode to generate insufficient current to protect the chain completely. The anode was performing satisfactorily, however, and all electrical connections were in good condition as determined both by visual inspection and measurement of potentials. There was a fair degree of continuity on portions of legs without wire rope.

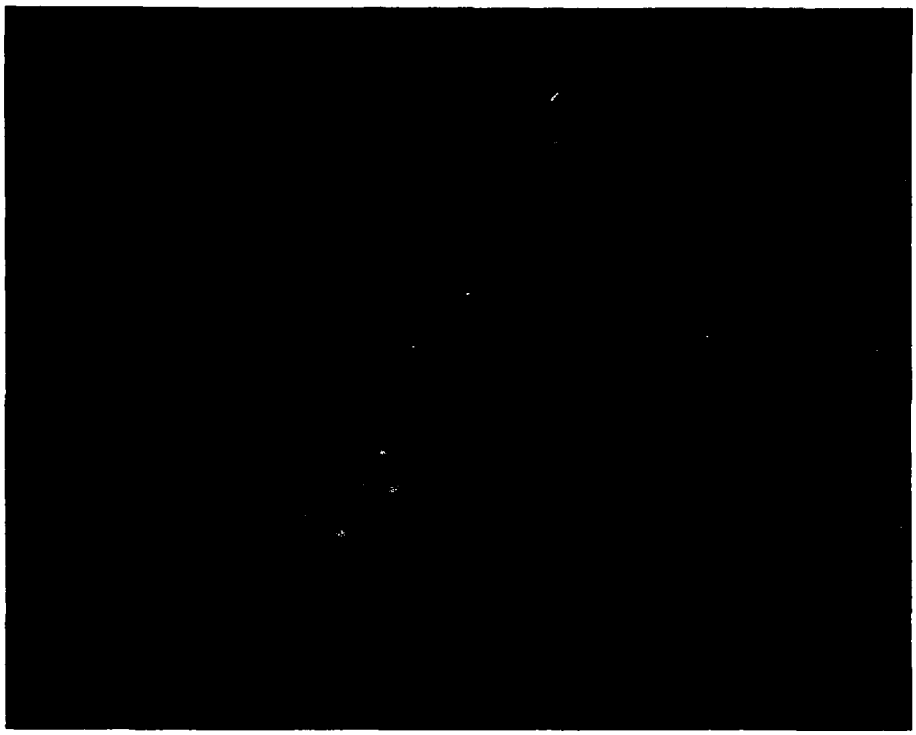

Figure 3. Diver with Special-D anode.

Figure 4. Diver using tap to secure Special-D anode to cable.

Table 1. Potential Readings/Hour After Installation of Special-D Anode

Reading No.	Potential (mv)	Location of Pick
1	- 680	32 feet beyond sinker
2	- 840	24 feet beyond sinker
3	- 860	16 feet beyond sinker
4	- 870	8 feet beyond sinker
5	- 990	at concrete sinker
6	- 970	
7	-1,020	
8	-1,020	
9	-1,020	
10	-1,020	
11	-1,020	
12	-1,030	
13	-1,020	
14	-1,020	
15	-1,020	
16	-1,020	
17	-1,020	
18	-1,020	
19	-1,020	at anode area
20	-1,010	
21	-1,000	
22	-1,000	
23	-1,000	
24	-1,000	at ground ring
25	-1,000	8 feet down unprotected leg
26	- 700	16 feet down unprotected leg
27	- 700	24 feet down unprotected leg
28	- 700	32 feet down unprotected leg

Table 2. Potential Readings/Day After Additional Wiring

Reading No.	Potential (mv)	Location of Pick
1	-1,000	at buoy
2	-1,000	riser
3	-1,000	ground ring
4	-1,000	
5	-1,010	
6	-1,010	
7	-1,020	
8	-1,040	on anode pipe core
9	-1,020	
10	-1,020	
11	-1,020	
12	-1,020	
13	-1,020	
14	-1,020	
15	-1,020	
16	-1,020	
17	-1,020	
18	-1,030	
19	-1,020	
20	-1,020	
21	-1,020	
22	-1,020	
23	-1,020	at concrete sinker
24	-1,010	
25	-1,010	
26	-1,010	
27	-1,010	
28	-1,010	
29	-1,010	
30	-1,000	
31	-1,000	
32	- 990	
33	- 980	
34	- 970	
35	- 650	at anchor

Table 3. Potential Readings 6 Weeks After Installation of Special-D Anode

Reading No.[a]	Potential (mv) on—					
	Riser-Chain	Leg 1[d]	Leg 2[e]	Leg 3[e]	Leg 4[e]	Leg 5[e]
1	-750[b]	-800	-750	-750	-750	-750
2	-750	-800	-750	-750	-750	-750
3	-750[c]	-810	-750	-710	-750	-700
4	–	-820	-750	-690	-750	-690
5	–	-960[f]	-710	-690	-680	-680
6	–	-810	-680	-680	-680	-680
7	–	-800	–	–	–	–
8	–	-790	–	–	–	–
9	–	-780	–	–	–	–
10	–	-780	–	–	–	–
11	–	-770	–	–	–	–
12	–	-760	–	–	–	–
13	–	-750[g]	–	–	–	–

[a] Readings taken approximately every 8 feet unless otherwise specified.

[b] At buoy.

[c] At ground ring.

[d] Cathodically protected leg.

[e] Unprotected leg.

[f] At pipe core of Special-D anode.

[g] About 10 feet past concrete sinker—no readings taken beyond this point.

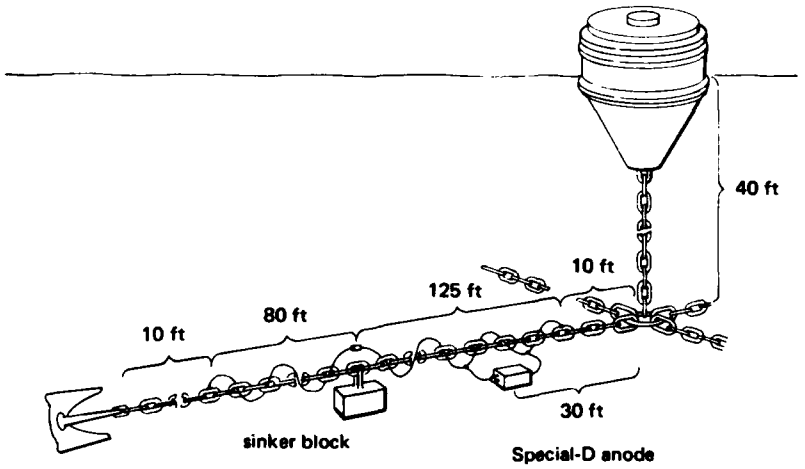

Figure 5. Test setup of cathodic protection kit on Fleet mooring.

A stainless steel pipe clamp was removed from the Fleet mooring that had been cathodically protected for 4-1/2 years. The clamp was found to be in good condition, although there was some corrosion on its cadmium-plated steel screw.

DISCUSSION

The mooring on which the field testing was accomplished had recently been overhauled and reinstalled. Thus the coal tar coating on the chain was in excellent condition, and the riser-chain and all five ground legs were very tight. These conditions aid in reducing current requirements and in distributing cathodic protection throughout the ground tackle. In the work reported in NCEL Technical Report R-702, three anodes were used on each ground leg consisting of 2-1/2 90-foot-long shots of chain. From the present test and previous observations, it appears that two anodes should impart complete protection to such a ground leg for at least 15 years.

The anode was located quite close to the ground ring assembly which is by far the area most subject to corrosion. Initially, the entire ground leg with the wire rope had almost the same level of protection with only a slight fall-off beyond the final point of wire rope attachment near the anchor (see Table 2). Later, because additional current requirements could not be met, the area nearest the anode received greater protection than the more remote area on the ground leg (see Table 3).

In-place installation of a cathodic protection system to a Fleet mooring has definitely been shown to be practical. The clamping of the continuity cable to the chain took the most time, while the installation of the Special-D anode took very little time. It would, thus, be more economical and practical to accomplish the installation of the wire rope as well as link anodes, if they are used, at the time of a regularly scheduled overhaul of the mooring. Additional anodes would be installed by a diver very easily as the old ones were consumed.

The divers who installed the wire rope and Special-D anode estimated that they could easily complete such an installation on a 2-1/2-shot ground leg in 3 hours. The divers are paid $12 per hour, and the diving boat costs $13 per hour. Replacement of chain anodes on a mooring would take 2 or more days, depending upon the number of ground legs, and require the use of a floating crane at $13 per hour, two self-propelled pontoon tugs at a total of $25 per hour, and a 10-man crew at a total of $90 per hour.

The Special-D anode costs $200, including fittings, while chain anodes are available for $231 each. If these anodes should become stock rather than specialty items, then their prices should drop to about $160.

Many field activities state that instead of a corrosion problem in the ground ring area they have a serious wear problem. The cathodically protected mooring described in NCEL Technical Report R-702 showed no wear or corrosion in any area. It seems that the reported "wear" in the ground ring area may be a combination of corrosion and rubbing off of the corrosion products.

In accordance with BUDOCKSINST 11153.4B of 9 April 1965, the buoy on each Fleet mooring is to be lifted out of the water annually for inspection of the buoy and its ground tackle connection. This is costly, exposes only a fraction of the ground tackle for visual inspection, and may dislodge one or more anchors. A cathodically protected mooring can be inspected more economically by a diving boat crew using a meter that will tell if all parts of the mooring are being protected from corrosion.

An installation guide is included in the appendix for those field activities wishing to use the cathodic protection system on Fleet moorings.

COST ANALYSIS

A detailed cost analysis for maintenance of Fleet moorings with and without cathodic protection was given in NCEL Technical Report R-702 for the previous cathodic protection system. An updated cost analysis for maintenance with the recently developed cathodic protection kit is presented here. It should be understood that some precision is lost from such an analysis when the data from one type of mooring is modified for use on another type, or data from one location is used for estimating costs at another location.

A cost comparison for maintaining two types of Fleet moorings with and without cathodic protection is given in Table 4. An eight-legged Class BB and a three-legged Class D mooring were chosen because they represent the most expensive and the least expensive, respectively, of the Fleet moorings in San Diego Bay. Table 5 lists the assumptions made in these comparisons. The maintenance costs were taken from the latest cost data available from Public Works Center, San Diego and from cost values in the Discussion portion of this report.

Figures 6 and 7 show graphically the accumulated maintenance savings for these two types of moorings, with and without cathodic protection, in San Diego Bay. Note that although the actual savings were much greater for the more expensive mooring, the percent savings were almost identical, about 69%. This probably holds true for all classes of moorings in San Diego Bay that are maintained on the same schedule. If the percent of maintenance savings at San Diego is similar to that throughout the Naval Shore Establishment, then about $500,000 might be saved from the average

amount ($717,000) allocated by NAVFAC for mooring maintenance (FY-70 and FY-71). When considered from a present value viewpoint and using a 10% discount rate as specified in SECNAV INSTRUCTION 7000.14 of 30 January 1970, the savings over a 15-year period would be closer to 50% or about $360,000 annually for the entire Naval Shore Establishment. Thus, without even considering eventual replacement costs for deteriorated buoys and ground tackle without cathodic protection, the use of the NCEL-developed cathodic protection system is well justified by the great reduction in maintenance costs.

Table 4. Maintenance Costs for San Diego Moorings With and Without Cathodic Protection[a]

Year	Cost ($) for—					
	Mooring Without Cathodic Protection			Mooring With Cathodic Protection		
	Code[b]	Class BB (8 legs)	Class D (3 legs)	Code[b]	Class BB (8 legs)	Class D (3 legs)
0	–	0	0	C	4,300	1,800
1	A	500	350	A	500	350
2	A	500	350	A	500	350
3	B_1, A	10,100	5,700	A	500	350
4	A	500	350	A	500	350
5	A	500	350	B_2, A	1,100	885
6	B_1, A	10,100	5,700	A	500	350
7	A	500	350	A	500	350
8	A	500	350	A	500	350
9	B_1, A	10,100	5,700	A	500	350
10	A	500	350	B_2, A	1,100	885
11	A	500	350	A	500	350
12	B_1, A	10,100	5,700	A	500	350
13	A	500	350	A	500	350
14	A	500	350	A	500	350
15	B_1, A	10,100	5,700	D, B_2, A	4,400	2,185
Total		55,500	32,000		16,900	9,955

[a] Assuming new mooring at start and not including eventual mooring replacement costs because of deterioration.

[b] See Table 5 for type of maintenance.

Table 5. Cost Value Assumptions

(Data compiled from San Diego moorings)

Code	Item	Cost ($) for Mooring			
		Without Cathodic Protection		With Cathodic Protection	
		Class BB (8 legs)	Class D (3 legs)	Class BB (8 legs)	Class D (3 legs)
A	Annual in-place maintenance (for example, inspection, realignment, lighting repair)	500	350	500	350
	Removal, overhaul, and reinstallation				
B_1	Every 3 years (entire mooring)	9,600[a]	5,350[a]	–	–
B_2	Every 5 years (buoy only)	–	–	600	535
C	Installation of original cathodic protection system	–	–	4,300	1,800
D	Replacement of anodes every 15 years	–	–	3,300	1,300

[a] June 1971 data from PWC, San Diego.

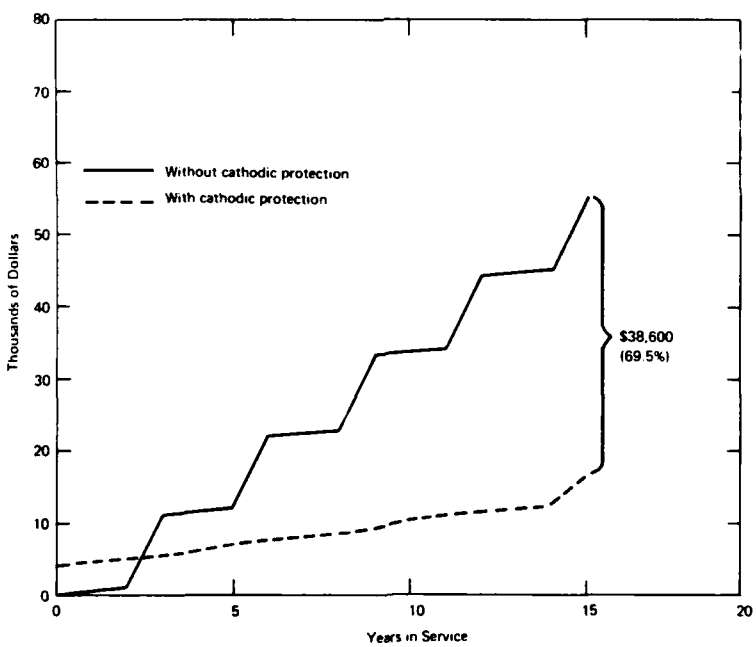

Figure 6. Cumulative cost savings for maintaining an eight-legged Class BB mooring in San Diego Bay for 15 years.

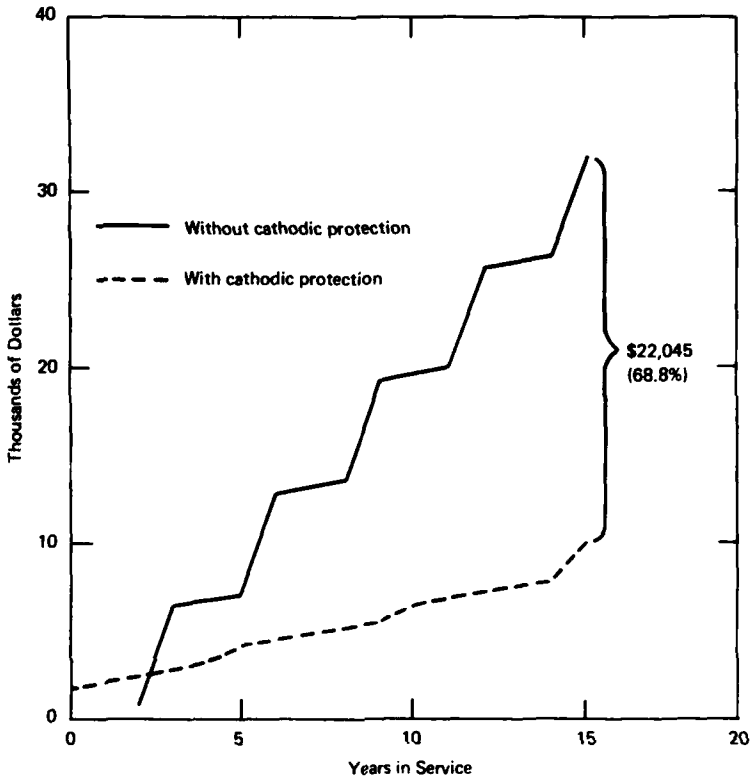

Figure 7. Cumulative cost savings for maintaining a three-legged Class D mooring in San Diego Bay for 15 years.

CONCLUSIONS

1. The cathodic protection kit with Special-D anodes can more easily and economically replace consumed anodes than can the former system with link anodes.

2. Using the cathodic protection kit, a complete cathodic protection system can be installed in situ by divers using the facilities available on a typical diving boat.

3. Two zinc anodes with a nominal weight of 500 pounds can protect a coated 225-foot ground leg for at least 15 years before anode replacement is necessary.

4. Cathodic protection can greatly reduce maintenance costs for Fleet moorings—perhaps by $360,000 annually throughout the Naval Shore Establishment.

RECOMMENDATIONS

1. The NCEL-designed cathodic protection system should be widely used throughout the Naval Shore Establishment.

2. Installations of such a system at locations other than San Diego should be monitored to determine (a) any special requirements at these locations, and (b) cost savings at these locations.

Appendix

CATHODIC PROTECTION SYSTEM FOR PERMANENT FLEET MOORINGS

A cathodic protection system for permanent Fleet moorings consists of sacrificial zinc anodes, wire ropes for imparting electrical continuity to the ground tackle, and fittings to secure the system. A properly designed and installed system on a tight mooring will protect the underwater portion of the buoy and the entire ground tackle from corrosion for 15 years in aggressive environments and longer periods at milder locations.

1. ANODES. Three types of sacrificial anodes with a zinc composition conforming to MIL-A-18001 are used. All three types are available from Quemetco, Inc. of Seattle, Washington, and some may be available elsewhere. In order for sacrificial anodes to perform properly, they must be free of paint, grease, dirt, or other superficial coatings.

a. Buoy anodes. Anodes for use directly on buoys are commonly available. A convenient one has a zinc casting with a nominal length of 36 inches, a nominal cross-sectional area of 16 in.^{2}, and a nominal weight of 150 pounds, and is cast on a 3/4-inch-diameter pipe with a nominal length of 48 inches (Figure 8a). Buoy anodes must be secured in a location where they will not be subjected to impact by moored vessels; for example, bottom of telephone buoys or in a sea chest built into core portions of peg-top riser-type buoys. The zinc castings should be located about 4 inches from buoy surfaces.

b. Link anodes. Link anodes are cast on special chain links that can be joined directly into the ground tackle system before the mooring is laid. The zinc castings have a nominal length of 24 inches, a nominal cross-sectional area of 80 in.^{2}, and a nominal weight of 500 pounds. Link anodes are supplied secured to a wooden pallet for easy handling by a fork-lift truck (Figure 8b).

c. Special-D anodes. Special-D anodes, like link anodes, have a zinc casting with a nominal length of 24 inches, a nominal cross-sectional area of 80 in.^{2}, and a nominal weight of 500 pounds, and, like buoy anodes, are cast on a 3/4-inch-diameter steel pipe. An insulated copper wire is passed

through the pipe core, bared at each pipe end, and soldered to the pipe ends; then the pipe is potted with epoxy to reduce stresses on the connections. These lead wires extend about 30 feet from the anode, which is secured to a wooden pallet for easy handling by a fork-lift truck (Figure 8c). Special-D anodes are joined in situ to wire ropes (described below) to supplement expended link anodes, or they are used in a cathodic protection system initially installed in situ.

2. WIRE ROPES. Wire ropes are woven back and forth through the ground tackle and periodically joined to it to provide the electrical continuity necessary for distributing the cathodic protection. A 5/8- to 3/4-inch-diameter galvanized steel wire rope has the necessary flexibility and strength characteristics.

3. FITTINGS. The type and size of fittings for the cathodic protection system vary with the specific function to be served.

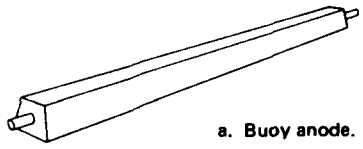

a. Buoy anode.

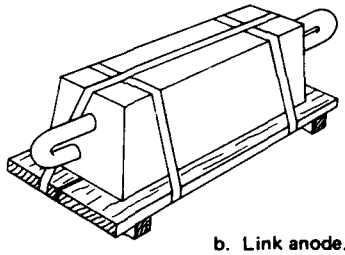

b. Link anode.

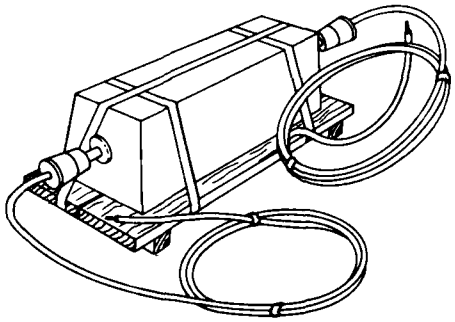

c. Special-D anode.

Figure 8. Types of anodes used on a Fleet mooring.

a. Joining buoy anodes to buoy. A pair of brackets support each buoy anode. The brackets are welded directly to the buoy shell and have threaded fittings for simple installation and replacement of anodes either ashore or in situ. The fittings are of clean, unpainted metal to insure good electrical continuity between the zinc anode and the buoy shell. Where recessing of the anode is necessary, the brackets are located in a 1 x 1 x 4-1/2-foot sea chest built to house the anode and its fittings.

b. Joining link anodes to ground tackle. Standard joining links join the link anodes to the ground tackle. See Table 6-13 of NAVFAC Design Manual 26, "Harbor and Coastal Facilities."

c. Joining Special-D anodes to wire ropes. A number of clamps are available that can secure the Special-D anode leads to the wire

ropes to provide electrical continuity to the ground tackle. Probably the simplest to use is the 35116 Hinjon Junior tee-parallel tap of the Thomas and Betts Company, Elizabeth, New Jersey.

d. Joining wire ropes to ground tackle. In order to provide electrical continuity, metal pipe clamps join the wire ropes to the ground tackle.

4. INSTALLATION OF CATHODIC PROTECTION SYSTEM.

Cathodic protection should not be used in place of coatings on buoys or chain, but as a supplement to it. For proper operation, however, the anodes, wire ropes, and electrical fittings should not be painted; the wire ropes and fittings will be cathodically protected from corrosion by the system. Installation of the cathodic protection system is most easily and economically accomplished at the time of the regularly scheduled mooring overhaul.

a. Securing buoy anodes. Buoy anodes usually are installed initially ashore when buoys are being overhauled. Replacement usually is made in situ at the time of the regularly scheduled maintenance inspection by lifting the buoy out of the water and removing and replacing the nuts from bolts or threaded studs. Pairs of anodes usually are secured at diametrically opposite locations on the buoy to obtain maximum spread of cathodic protection. Additional anodes can be used with larger-than-usual buoys or for longer anode life.

b. Securing link anodes to ground tackle. Link anodes usually are installed initially ashore when the ground tackle is being overhauled. The anodes are located where shots of chain are joined together. NAVFAC Design Manual 26 specifies the number of shots and half shots of chain needed for different classes of moorings at different water depths. One anode will protect 1-1/2 shots of coated chain. To determine the number of anodes necessary for each leg, divide the number of shots by 1-1/2 and add an anode for each fraction left over. For example, for 3-1/2 shots:

$$\frac{3\text{-}1/2}{1\text{-}1/2} = 2\text{-}1/3\text{; therefore, } 2 + 1 = 3 \text{ anodes}$$

Starting at the buoy (for telephone-type moorings) or at the ground ring (for riser-chain-type moorings), place the first link anode after 1/2 shot or 1 shot, depending on whether a 1/2 shot is used. Where one anode is not needed per shot, use fewer at the anchor end of the chain as indicated in Table 6 and Figure 9. For riser-chains of 1/2 shot or less, no anode is required. When anodes are used, they should, as on the ground legs, be located so as to have one relatively close to the ground ring where corrosion is the greatest.

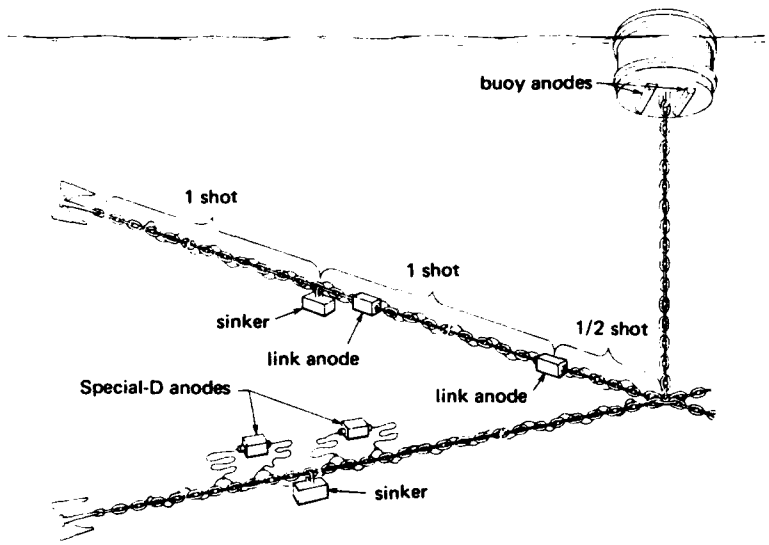

Figure 9. Portion of Fleet mooring showing location of anodes.

c. Securing Special-D anodes. Special-D anodes are secured in situ by a diver. The number required for a given chain length is the same as for link anodes (see Table 6), and their location on the ground legs should approximate that of link anodes. Their leads should be sufficiently long and so located that the anodes will not be displaced by movement of the ground legs by mooring forces. See Figure 9.

d. Installing wire ropes. The wire ropes are easiest to install after the ground tackle has been arranged on the deck of a floating crane for laying, but they can be installed in situ by a diver. After the wire rope is loosely woven back and forth

through about every eighth link, it is then clamped to every eighth link of the chain. The coating is scraped away from the steel at this location prior to clamping. The ground legs should be laid tight to obtain the best electrical continuity. For a tight riser-chain of 1/2 shot or less, no wire rope is necessary, but one may be used as an additional safety factor. The ground tackle with the wire ropes secured to it should be laid carefully so that the pipe clamps do not break during this operation. The wire ropes should extend the entire length of each ground leg, terminating about 10 feet short of the anchor as its protection from corrosion is not generally required. One wire rope can generally be used for up to 3 shots of chain, but for longer legs several lengths of wire rope can be joined to each other with wire rope clips.

5. MONITORING OF CATHODIC PROTECTION SYSTEM.

Potentials on the cathodic protection system can be monitored with a portable field meter having two 100-foot leads—one secured to a steel pick and the other to a reference half-cell. The instrument is read at the surface while a diver makes electrical contact with the pick on the mooring chain and holds the half-cell about 1 foot away. Either copper/copper sulfate or silver/silver chloride half-cells can be used as the references. Potentials of -850 mv with the former and -800 mv with the latter reference cells are considered to be sufficient for full protection from corrosion, but values at least -50 mv higher are considered to be more desirable. If localized areas are not fully protected, additional pipe clamps should join the wire ropes to the chain for greater continuity. If long areas have no protection, there is probably a break in a wire rope that can be rejoined with a wire rope clip, or, if Special-D anodes have been used, they may have become disconnected from the wire rope. If low potentials are found throughout the ground tackle, additional anodes are required. The anodes should always be inspected visually when potentials are taken on the ground tackle.

Table 6. Number and Sequence of Link Anodes (L), Shots (S), and Half Shots (S/2) on Different Lengths of Chain

Number of Shots[a]	Number of Link Anodes Required	Spacing of Link Anodes[b]
1-1/2	1	$\frac{S}{2}$-L-S
2	2	S-L-L-S
2-1/2	2	$\frac{S}{2}$-L-S-L-S
3	2	S-L-S-L-S
3-1/2	3	$\frac{S}{2}$-L-S-L-S-L-S
4	3	S-L-S-L-S-L-S
4-1/2	3	$\frac{S}{2}$-L-S-L-S-L-S-S
5	4	S-L-S-L-S-L-S-L-S
5-1/2	4	$\frac{S}{2}$-L-S-L-S-L-S-L-S-S
6	4	S-L-S-L-S-L-S-L-S-S
6-1/2	5	$\frac{S}{2}$-L-S-L-S-L-S-L-S-L-S-S
7	5	S-L-S-L-S-L-S-L-S-L-S-S
7-1/2	5	$\frac{S}{2}$-L-S-L-S-L-S-L-S-S-L-S-S
8	6	S-L-S-L-S-L-S-L-S-L-S-L-S-S
8-1/2	6	$\frac{S}{2}$-L-S-L-S-L-S-L-S-L-S-S-L-S-S
9	6	S-L-S-L-S-L-S-L-S-L-S-S-L-S-S
9-1/2	7	$\frac{S}{2}$-L-S-L-S-L-S-L-S-L-S-L-S-S-L-S-S
10	7	S-L-S-L-S-L-S-L-S-L-S-L-S-S-L-S-S
10-1/2	7	$\frac{S}{2}$-L-S-L-S-L-S-L-S-L-S-S-L-S-S-L-S-S
11	8	S-L-S-L-S-L-S-L-S-L-S-L-S-L-S-S-L-S-S
11-1/2	8	$\frac{S}{2}$-L-S-L-S-L-S-L-S-L-S-L-S-S-L-S-S-L-S-S
12	8	S-L-S-L-S-L-S-L-S-L-S-L-S-S-L-S-S-L-S-S
12-1/2	9	$\frac{S}{2}$-L-S-L-S-L-S-L-S-L-S-L-S-L-S-S-L-S-S-L-S-S
13	9	S-L-S-L-S-L-S-L-S-L-S-L-S-L-S-S-L-S-S-L-S-S

[a] See appropriate table in NAVFAC Design Manual 26 to determine number of shots required for a specific mooring.

[b] Read column from left to right for sequence from buoy (for telephone-type moorings) or from ground ring (for riser-type moorings) to anchor.

Naval Civil Engineering Laboratory
CATHODIC PROTECTION KIT FOR FLEET MOORINGS
(Final), by R. W. Drisko
TR-760 21 p. illus March 1972 Unclassified

1. Special-D zinc anode
2. Cathodic protection

I. YF 51.543.006.01.010

A kit was developed to reduce corrosion-related maintenance costs by cathodically protecting Fleet moorings. Maintenance costs for Fleet moorings in the Naval Shore Establishment might be reduced by $360,000 annually if the moorings were cathodically protected by this system. The kit consists of Special-D zinc anodes, wire rope, and special fittings. It can be used either to install a cathodic protection system in a Fleet mooring in situ or to replace consumed link-anodes in situ. A guide is included for use of this kit by field activities.

Naval Civil Engineering Laboratory
CATHODIC PROTECTION KIT FOR FLEET MOORINGS
(Final), by R. W. Drisko
TR-760 21 p. illus March 1972 Unclassified

1. Special-D zinc anode
2. Cathodic protection

I. YF 51.543.006.01.010

A kit was developed to reduce corrosion-related maintenance costs by cathodically protecting Fleet moorings. Maintenance costs for Fleet moorings in the Naval Shore Establishment might be reduced by $360,000 annually if the moorings were cathodically protected by this system. The kit consists of Special-D zinc anodes, wire rope, and special fittings. It can be used either to install a cathodic protection system in a Fleet mooring in situ or to replace consumed link-anodes in situ. A guide is included for use of this kit by field activities.

Naval Civil Engineering Laboratory
CATHODIC PROTECTION KIT FOR FLEET MOORINGS
(Final), by R. W. Drisko
TR-760 21 p. illus March 1972 Unclassified

1. Special-D zinc anode
2. Cathodic protection

I. YF 51.543.006.01.010

A kit was developed to reduce corrosion-related maintenance costs by cathodically protecting Fleet moorings. Maintenance costs for Fleet moorings in the Naval Shore Establishment might be reduced by $360,000 annually if the moorings were cathodically protected by this system. The kit consists of Special-D zinc anodes, wire rope, and special fittings. It can be used either to install a cathodic protection system in a Fleet mooring in situ or to replace consumed link-anodes in situ. A guide is included for use of this kit by field activities.

Naval Civil Engineering Laboratory
CATHODIC PROTECTION KIT FOR FLEET MOORINGS
(Final), by R. W. Drisko
TR-760 21 p. illus March 1972 Unclassified

1. Special-D zinc anode
2. Cathodic protection

I. YF 51.543.006.01.010

A kit was developed to reduce corrosion-related maintenance costs by cathodically protecting Fleet moorings. Maintenance costs for Fleet moorings in the Naval Shore Establishment might be reduced by $360,000 annually if the moorings were cathodically protected by this system. The kit consists of Special-D zinc anodes, wire rope, and special fittings. It can be used either to install a cathodic protection system in a Fleet mooring in situ or to replace consumed link-anodes in situ. A guide is included for use of this kit by field activities.

Unclassified

Security Classification

DOCUMENT CONTROL DATA - R & D

(Security classification of title, body of abstract and indexing annotation must be entered when the overall report is classified)

1. ORIGINATING ACTIVITY *(Corporate author)*

Naval Civil Engineering Laboratory
Port Hueneme, California 93043

2a. REPORT SECURITY CLASSIFICATION

Unclassified

2b. GROUP

3. REPORT TITLE

CATHODIC PROTECTION KIT FOR FLEET MOORINGS

4. DESCRIPTIVE NOTES *(Type of report and inclusive dates)*

Final; July 1970 – June 1971

5. AUTHOR(S) *(First name, middle initial, last name)*

R. W. Drisko

6. REPORT DATE

March 1972

7a. TOTAL NO. OF PAGES

21

7b. NO. OF REFS

1

8a. CONTRACT OR GRANT NO.

b. PROJECT NO. YF 51.543.006.01.010

c.

d.

9a. ORIGINATOR'S REPORT NUMBER(S)

TR-760

9b. OTHER REPORT NO(S) *(Any other numbers that may be assigned this report)*

10. DISTRIBUTION STATEMENT

Distribution limited to U.S. Government agencies only; Test and Evaluation; March 1972. Other requests for this document must be referred to the Naval Civil Engineering Laboratory.

11. SUPPLEMENTARY NOTES

12. SPONSORING MILITARY ACTIVITY

Naval Facilities Engineering Command
Washington, D. C. 20390

13. ABSTRACT

A kit was developed to reduce corrosion-related maintenance costs by cathodically protecting Fleet moorings. Maintenance costs for Fleet moorings in the Naval Shore Establishment might be reduced by $360,000 annually if the moorings were cathodically protected by this system. The kit consists of Special-D zinc anodes, wire rope, and special fittings. It can be used either to install a cathodic protection system in a Fleet mooring in situ or to replace consumed link-anodes in situ. A guide is included for use of this kit by field activities.

DD FORM 1 NOV 65 1473 (PAGE 1)

S/N 0101-807-6801

Unclassified

Security Classification

Unclassified

Security Classification

14 KEY WORDS	LINK A ROLE	LINK A WT	LINK B ROLE	LINK B WT	LINK C ROLE	LINK C WT
Fleet moorings						
Cathodic protection						
Corrosion						
Mooring maintenance						
Buoys						
Ground tackle						
Zinc anodes						
Galvanized steel pipe						
Cathodic potentials						
Sinker blocks						
Ground cables						
Chain links						
Tee-paralleled tap connector						
Coal-tar coatings						

DD FORM 1 NOV 65 1473 (BACK)

(PAGE 2)

Unclassified

Security Classification