UNCLASSIFIED

AD NUMBER
AD891286
LIMITATION CHANGES
TO: **Approved for public release; distribution is unlimited.**
FROM: **Distribution authorized to U.S. Gov't. agencies only; Test and Evaluation; DEC 1971. Other requests shall be referred to Rome Air Development Center, Griffiss AFB, NY 13440.**
AUTHORITY
RADC ltr 9 Apr 1981

THIS PAGE IS UNCLASSIFIED

THIS REPORT HAS BEEN DELIMITED
AND CLEARED FOR PUBLIC RELEASE
UNDER DOD DIRECTIVE 5200.20 AND
NO RESTRICTIONS ARE IMPOSED UPON
ITS USE AND DISCLOSURE.

DISTRIBUTION STATEMENT A

APPROVED FOR PUBLIC RELEASE;
DISTRIBUTION UNLIMITED.

RADC-TR-71-81
Technical Report
December 1971

See 1473

BEARING IMPROVEMENT PROGRAM FOR LARGE ROLLING ELEMENT BEARINGS

AD891286

AD No.
DDC FILE COPY

DDC
RECEIVED
FEB 8 1972
B

Distribution limited to U. S. Gov't agencies only; test and evaluation; December 1971. Other requests for this document must be referred to RADC (TSGM), GAFB, NY 13440.

Rome Air Development Center
Air Force Systems Command
Griffiss Air Force Base, New York

ACCESSION for
CFSTI WHITE SECTION ☐
DDC BUFF SECTION ☑
UNANNOUNCED ☐
JUSTIFICATION .....
.....
BY .....
DISTRIBUTION/AVAILABILITY CODES
DIST. AVAIL. and/or SPECIAL
B

Do not return this copy. Retain or destroy.

BEARING IMPROVEMENT PROGRAM FOR LARGE ROLLING ELEMENT BEARINGS

Jerome P. Scheiderich
William J. Bocchi

Distribution limited to U. S. Gov't agencies only; test and evaluation; December 1971. Other requests for this document must be referred to RADC (TSGM), GAFB, NY 13440.

FOREWORD

The work reported herein was accomplished under System 416L during the time period from 1959 to 1964 and under Job Order No. 91420000 from 1964 to 1969. Technical management was by Rome Air Development Center, first by personnel of the Radar Section of the Surveillance and Control Division, later by the Mechanical Engineering Section of the Engineering Division and Technical Support Division.

The Administrative Program Manager and Sponsor of this work was Electronic Systems Division, Air Force Systems Command, L. G. Hanscom Field, Bedford, Massachusetts.

The authors wish to gratefully acknowledge the cooperation extended by personnel of the 416L System Support Manager, In-Service Engineering, and the Ground Electronics Engineering Installation Agency, all part of Air Force Logistics Command, and the Ground Communications Electronics Management, Maintenance Division in Headquarters, Aerospace Defense Command. Without the excellent working relationships established with these people, many of the accomplishments of this program would not have been possible.

Approved: ROBERT D. MERRILL
Chief, Engineering Branch
Technical Support Division

Approved: HAROLD B. OWENS
Colonel, USAF
Technical Support Division

FOR THE COMMANDER

FRED I. DIAMOND
Acting Chief, Plans Office

ABSTRACT

Numerous premature failures of large azimuth bearings (up to 13½ feet in diameter) in the AN/FPS-24 and AN/FPS-35 radars were a major cause of concern to the Air Force because of reduced availability of the radars and the high cost of bearing replacements. An intensive program was undertaken to increase bearing life and to reduce the impact of bearing failures on system operation and maintenance. Much of the information developed by this program is applicable not only to the specific problem covered here, but to any large bearing application. The program consisted of three phases:

(a) An immediate effort to determine possible means of increasing the life expectancy of four point contact balls and crossed roller bearings then in use and to improve the means of detecting failures and replacing bearings.

(b) Design and fabrication of a different type (2 row ball-roller) bearing for the AN/FPS-35 radar, and accelerated life testing for rapid evaluation of its capabilities.

(c) The development of a hydrostatic bearing for the AN/FPS-24 radar and the design of a similar bearing for the AN/FPS-35.

As a result of phase (a) of the program, the life of AN/FPS-24 rolling element bearings has more than doubled. A lesser degree of improvement was realized on AN/FPS-35 bearings. Bearing replacement time has been reduced by a factor of 3.

Phase (b) has shown the two row ball-roller bearing to be a substantial improvement over previous types, and its use in the remaining AN/FPS-35s has been recommended.

Phase (c) is not covered in this report, as it is the subject of a separate report, RADC-TR-69-429 AD# 870724 dated May 1970 entitled "Hydro-static Bearing Systems for AN/FPS-24 Radar".

TABLE OF CONTENTS

TITLE	PAGE
SECTION I	1
INTRODUCTION	1
1. The Problem	1
2. The Radar Antennas	1
3. Technical Background	6
4. Approach	7
SECTION II	13
ROLLING ELEMENT BEARING IMPROVEMENT PROGRAM	13
1. Bearing Type	13
2. Internal Design Details	15
3. Materials and Heat Treatment	16
4. Lubricant and Lubrication System	17
5. Internal Load Distribution	19
6. Installation Procedures and Equipment	24
7. Failure Detection	24
8. Results	25
SECTION III	26
ACCELERATED TEST PROGRAM	26
1. Test Facility	26
2. Failure Detection Efforts	27
3. Failure Analysis Effort	34
4. Test Program Results	34
SECTION IV	37
CONCLUSIONS	37
SECTION V	38
RECOMMENDATIONS	38
REFERENCES	40
APPENDIX/SUMMARY OF BEARING LIVES, AN/FPS-24 and AN/FPS-35 RADARS	41

LIST OF ILLUSTRATIONS

FIGURE NO.	TITLE	PAGE
1	AN/FPS-24 Radar Antenna	2
2	AN/FPS-35 Radar Antenna	2
3	AN/FPS-35 Azimuth Bearing	3
4	Ball and Race Damage AN/FPS-24 Ball Bearing	4
5	Roller and Race Damage AN/FPS-35 X Type Bearing	5
6	AN/FPS-24 Pedestal Arrangement	8
7	AN/FPS-35 Pedestal Arrangement	9
8	AN/FPS-24 Hydrostatic Bearing	11
9	Rolling Element Bearings	13
10	Two-Row Rolling Element Bearings	14
11	Precision Grinding of Bearing Seat	20
12	Precision Measurement of Bearing Flatness	20
13	Static Load Cell	22
14	Dynamic Ball Caliper	22
15	AN/FPS-35 Antenna System Rotating Components Being Raised On Jacks	24
16	Accelerated Test Rig	27
17	Bearing Test Facility Schematic	28
18	Data Acquisition System Block Diagram	30
19	Data Collection Equipment	30
20	Bearing Malfunction Signatures	31
21	Summation Process	32
22	Comparison of Three Methods of Vibration Analysis	33
23	Outer Race of Test Bearing No. 3, Showing Fatigue Damage	35

GLOSSARY

Ball path radius	– Radius of curvature, in a radial plane, of the raceway in which the balls travel.
Ball spin, roller spin	– In angular contact ball bearings, balls experience a spinning motion relative to the race at the point of contact with one race or the other about an axis normal to the race at the point of contact. In angular contact roller bearings, a similar motion occurs at both races. In four point contact ball bearings, it occurs at all four contact points, when all are loaded. The rate of spin is in the order of 2 to 3 RPM for angular contact bearings but may be as high as 70 RPM for 4 point contact bearings.
Bearing pitch diameter	– Diameter of a circle through the center of all the balls or rollers in a bearing.
Contact Angle	– In an angular contact bearing, the angle made by a line through the points of contact on the inner and outer race with the plane of the rolling elements.
Fatigue failure	– Failure resulting from repetitions or cycles of stress, at a stress level which, if applied statically, would not cause failure.
Flame hardening	– A selective process in which the area to be hardened is heated locally by a gas flame. As applied to large bearings, the race surface to be hardened travels at a uniform rate first through the flame, then through the quenching medium.
Hydrodynamic Lubrication	– Complete separation of bearing surfaces by an oil film in which the oil pressure is developed by relative motion of the surfaces.
Inspection, Magnetic Particle	– Procedure which detects the presence of nonmagnetic inclusions in steel.
Inspection, Metrological	– Procedure which determines dimensional accuracy.
Inspection, Ultrasonic	– Procedure which detects the presence of sub-surface cracks.
Machine Slide	– A device to permit precise lateral movement and location of a machine assembly.
Micro-Cleanliness	– Content of various types of inclusions as determined by ASTM methods for comparison with established standards.
Race Conformity	– In a ball bearing, the ratio of the ball path radius to the ball diameter.
Smearing, galling, scoring	– The transfer of material from one surface to another due to the formation of welded junctions between the opposing surfaces. Results from a high degree of sliding with inadequate lubrication.
Spalling	– A crater-like depression in the original rolling surface caused by a sub-surface crack which eventually propagates to the surface. This is the classical manifestation of rolling contact fatigue failure.

GLOSSARY (Continued)

Surface distress, glazing	– Plastic deformation of asperities, causing the metal to have a burnished or glossy appearance and resulting in a partial or total obliteration of the original finishing marks. In a more advanced stage, small pits form on the burnished surface. This type of surface failure occurs in practically pure rolling situations and does not occur when gross sliding is present.

I. INTRODUCTION

1. The Problem

AN/FPS-24 and AN/FPS-35 Air Defense Radars were designed for continuous, highly reliable operation in the SAGE (Semi-Automatic Ground Environment) system. It was intended that these radars should operate 365 days a year, 23 hours a day, for ten years, one hour a day being allowed for preventive maintenance. However, it soon became apparent that this degree of reliability was not to be realized. Azimuth bearings began to fail at an average rate of once a year on each AN/FPS-24, and once every two years on each AN/FPS-35. Because this high failure rate was not anticipated, ease of replacement had not been given major consideration in the design. Consequently, bearing changes required radars to be shut down for as long as three months, with costs as high as $175,000 for a single bearing change. This situation was intolerable to the user, Aerospace Defense Command (ADC), and to the Air Force Logistics Command (AFLC), which was responsible for supplying replacement bearings. As a result, direction was received to take immediate action to alleviate the urgent problems of supply and replacement time and to undertake concurrently a long range program of general improvement in the large antenna bearing area.

2. The Radar Antennas

To help the reader to better understand the magnitude of the problem, the following data is listed to describe physically the antennas which are shown pictorially in Figures 1 and 2.

	AN/FPS-24	AN/FPS-35
Reflector Width	120 ft.	126 ft.
Reflector Height	44 ft.	38 ft.
Rotating Wt.	178,000 lb.	140,000 lb.
Rotating Wt. with ice	218,000 lb.	170,000 lb.
Rotation Rate	5 RPM	5 RPM
Maximum Operating Wind Load (60 mph)	62,000 lb.	52,000 lb.
Maximum Operating Wind Moment	21×10^6 in. lb.	21.4×10^6 in. lb.
Bearing Data:		
Type	4 Point Contact Ball and Crossed Roller	
Bearing Pitch Diameter	10 ft.	12.5 ft.
Number of Balls	84	125
Number of Rollers	116	158
Ball Diameter	3.5 inch	3 inch
Roller Diameter	2.68 inch	2.5 inch

Figure 3 shows the size of the bearings, while Figures 4 and 5 are examples of the type of damage which has occurred as the result of fatigue failure.

3. Technical Background

The pedestals for the AN/FPS-24 and AN/FPS-35 radar antennas were designed in the 1957 to 1959 time period. Investigation by the contractors involved, as well as by Air Force engineers and independent researchers (such as MIT's Lincoln Laboratories), disclosed that while bearings comparable in size to those required here had been used in such applications as gun mounts and power shovels, whose operation tends to be intermittent, no data was available concerning performance and life expectancy when such bearings were rotated continuously for long periods. Engineers at MIT's Lincoln Laboratories had designed and built the CCM Mark I radar, a predecessor of the AN/FPS-24 and 35, but its 12½ foot pitch diameter bearing, while incorporating the best that the state of the art could provide at that time, had had relatively few hours of operation. Further, in the course of the design work on this radar, it became apparent that the prediction of life expectancy for such large bearings was uncertain at best,

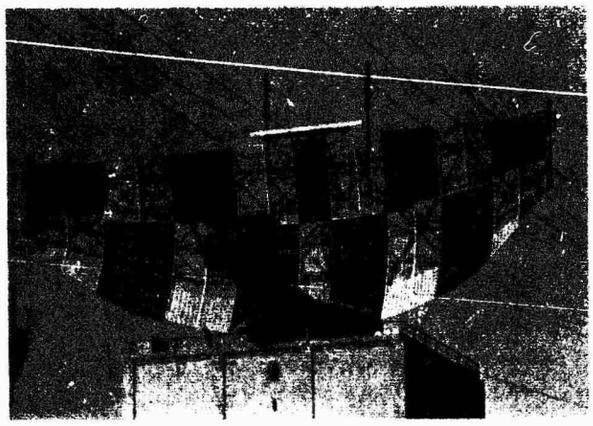

Figure 1. AN/FPS-24 Radar Antenna

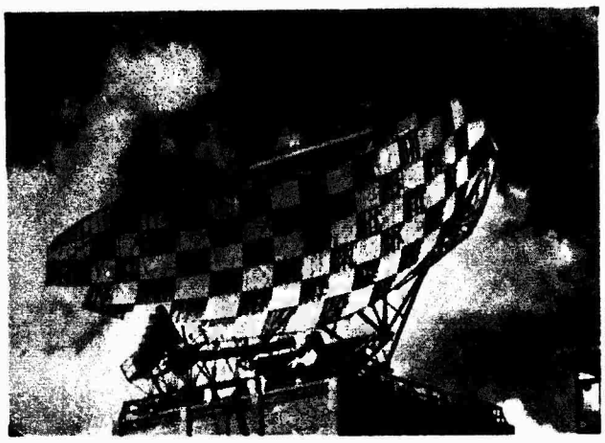

Figure 2. AN/FPS-35 Radar Antenna

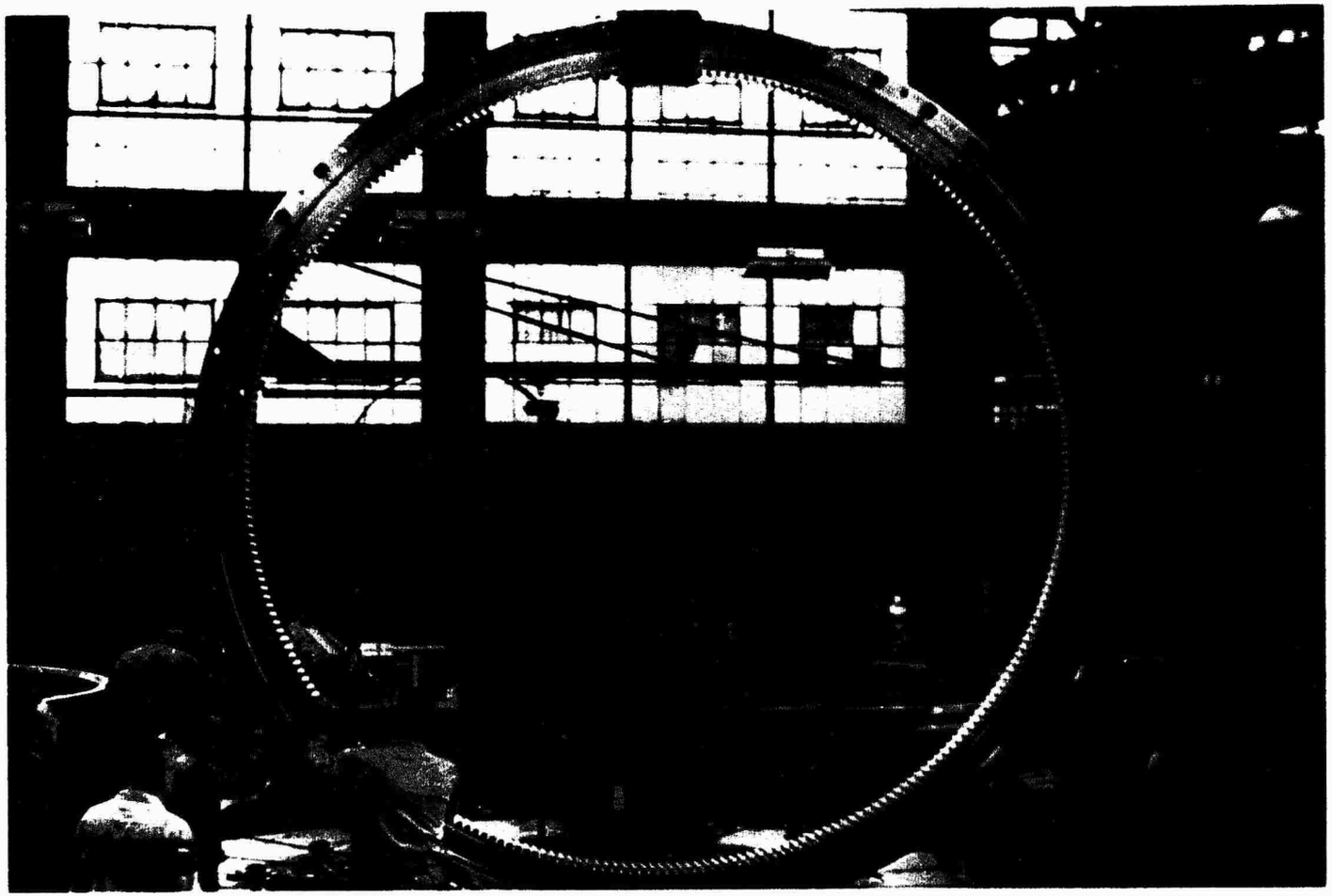

Figure 3. AN/FPS-35 Azimuth Bearing

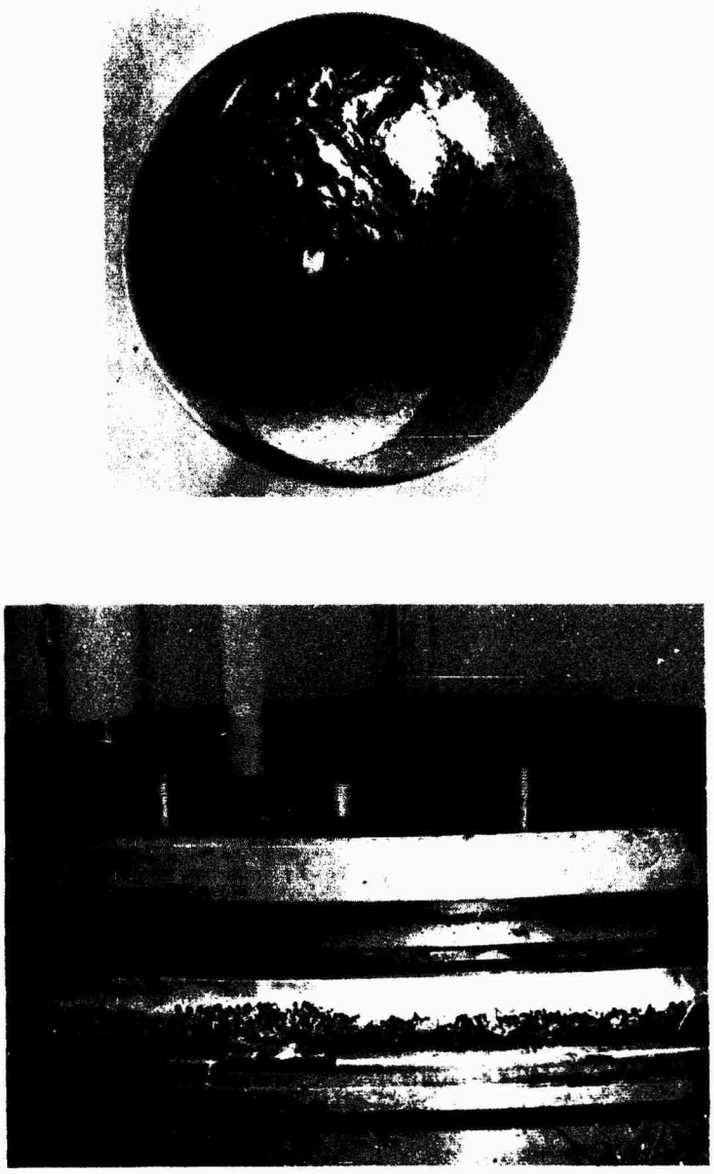

Figure 4. Ball and Race Damage AN/FPS-24 Ball Bearing

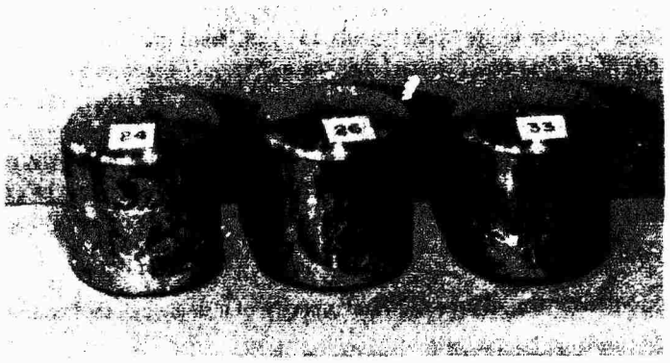

Figure 5. Roller and Race Damage AN/FPS-35 X Type Bearing

as illustrated by the large variation in life values calculated by different manufacturers and consultants. For example, the B10 life of the AN/FPS-24 four point contact ball bearing was calculated to be 103,400; 35,000; 23,300; or 16,657 hours by four bearing organizations working independently of each other. The actual B10 life realized by the first group of bearings was only 3900 hours. B10 life is the life which 90% of a population of bearings can be expected to equal or exceed and is the most common measure of bearing life. The average (B50) life of the population is normally expected to be about five times this value. This variation can best be explained by considering the manner in which bearing life is calculated. The procedure is based on the Lundberg-Palmgren statistical theory of fatigue life and can be briefly summarized for a ball bearing as follows:

The basic computation determines the dynamic capacity of a single ball-race contact from an expression such as:

$$Q_c = A \left[\frac{2f}{2f-1}\right]^{.41} \frac{\left[1 \pm \frac{D\cos\beta}{E}\right]^{1.39}}{\left[1 \pm \frac{D\cos\beta}{E}\right]^{1/3}} \left(\frac{D}{E}\right)^{.3} D^{1.4} n^{-1/3}$$

where

Q_c is the load which the ball-race contact can endure for 10^6 revolutions with 90% probability of survival.
A is the fatigue constant
f is the ratio of ball path radius to ball diameter
D is the ball diameter
E is the pitch diameter of the bearing
β is the contact angle
n is the number of balls

Note that the upper sign is used for inner race contact and the lower sign is used for outer race contact.

Next the internal distribution of load to each individual ball-race contact resulting from the external load system is determined. From these loads, an equivalent ball load can be calculated for each race which would give the same life as the actual individual loads. The life of each race is then determined by comparing the equivalent ball load to Q_c, knowing that the life of a ball-race contact varies inversely as the load raised to the third power. The life of the bearing is then obtained by statistically combining the lives of the two races.

When varying load conditions are known to exist, the bearing life for each condition of load is calculated as described above. The percentage of time during its entire life in which the bearing will be subject to each load condition is estimated. The individual lives are pro-rated and summed in accordance with this time schedule to obtain the total life for this load spectrum.

The following table illustrates this procedure for the AN/FPS-35 Crossed Roller Bearing:

Load Case	Time %	Wind MPH	Thrust Load Dead Wt. and Ice Lbs.	Total Life Hours
1	0.1	60	170,000	9,004
2	0.9	60	140,000	10,326
3	1.9	30	170,000	192,780
4	17.1	30	140,000	318,160
5	8.0	15	170,000	481,130
6	72.0	15	140,000	989,580
	Total pro-rated life =			398,005 hours

The calculations required to apply this procedure to the type of bearings used in antenna pedestals are extremely lengthy, and an exact solution is feasible only by the use of a digital computer.

While the same general procedure is used by most authorities, some variations are possible. Some of the material constants and exponents appearing in the capacity equation are normally obtained for a particular group of bearings from life tests conducted on large numbers of similar bearings. Testing of 10 to 12-foot diameter bearings to develop this type of data is not economically feasible. Therefore, extrapolation of existing data, tempered by the experience of the particular authority involved was necessary. For example, the Anti-Friction Bearing Manufacturers Association (AFBMA) suggests that for balls one inch in diameter or less, the ball diameter exponent should be 1.8, while for balls larger than 1 inch it should be reduced to 1.4. Other authorities recommended use of values of 1.6 and 2, based on their knowledge of the subject.

With reference to the determination of internal load distribution, the pedestal configurations selected for the AN/FPS-24 and 35, shown schematically in Figures 6 and 7, require that the one bearing simultaneously provide restraint to resist downward thrust, radial loads, and moment loads. The downward thrust is due to the dead weight of the antenna system, and the radial and moment loads are due to wind acting through the center of the antenna high above the bearing. Load distribution for such a system is highly indeterminate. Methods used by the several experts varied in their exactness and therefore contributed to the differences in final results.

Regardless of the foregoing differences, certain basic assumptions were common to all methods:

1. The basic Lundberg-Palmgren Theory was applicable to large bearings, i.e., the factors accounted for by the theory, and only those are predominant in producing failures in bearings regardless of size.

2. The fatigue constant developed for through-hardening steels commonly used in bearings was applicable to the different alloys used in large bearings, which had to be used because facilities large enough for through-hardening rings of this size were not available.

3. The load distribution calculation assumed that the bearing races were perfectly round and flat as installed, and that the bearing supporting structure was infinitely rigid so that perfect roundness and flatness are maintained during operation.

4. That both lubricant and lubrication were adequate, and that details not specifically accounted for in the theory, such as surface finishes, ball spin and other sliding effects, cage design, etc. were of the same relative importance to bearing life, regardless of size.

It is now apparent that none of these assumptions was completely valid. Subsequently, an attempt was made to develop the theory of bearing failure to the point where more of the critical variables can be taken into account.

4. Approach

The first bearing failures on AN/FPS-24 radars in January and November of 1961 at Eufala, Alabama, with 6300 and 5600 hours life, respectively, caused considerable consternation and launched an evolutionary program of improvements which was to continue for many years. The first actions taken were study efforts conducted by McKiernan-Terry Corporation, the AN/FPS-24 Pedestal Supplier; General Electric Company's Heavy Military Electronics Department, (HMED), the AN/FPS-24 prime contractor; and General Electric's Materials and Processes Lab and General Engineering Lab who were asked to look into the problem by HMED. The studies included failure analysis, metallurgy, metallographic examinations, dimensional inspection of bearings and pedestals, stress and deflection analysis of the bearings, lubrication, and additional life studies. The analytical work was augmented by experimental programs conducted on the prototype pedestal at Eufala and a production pedestal which had not yet been installed at that time.

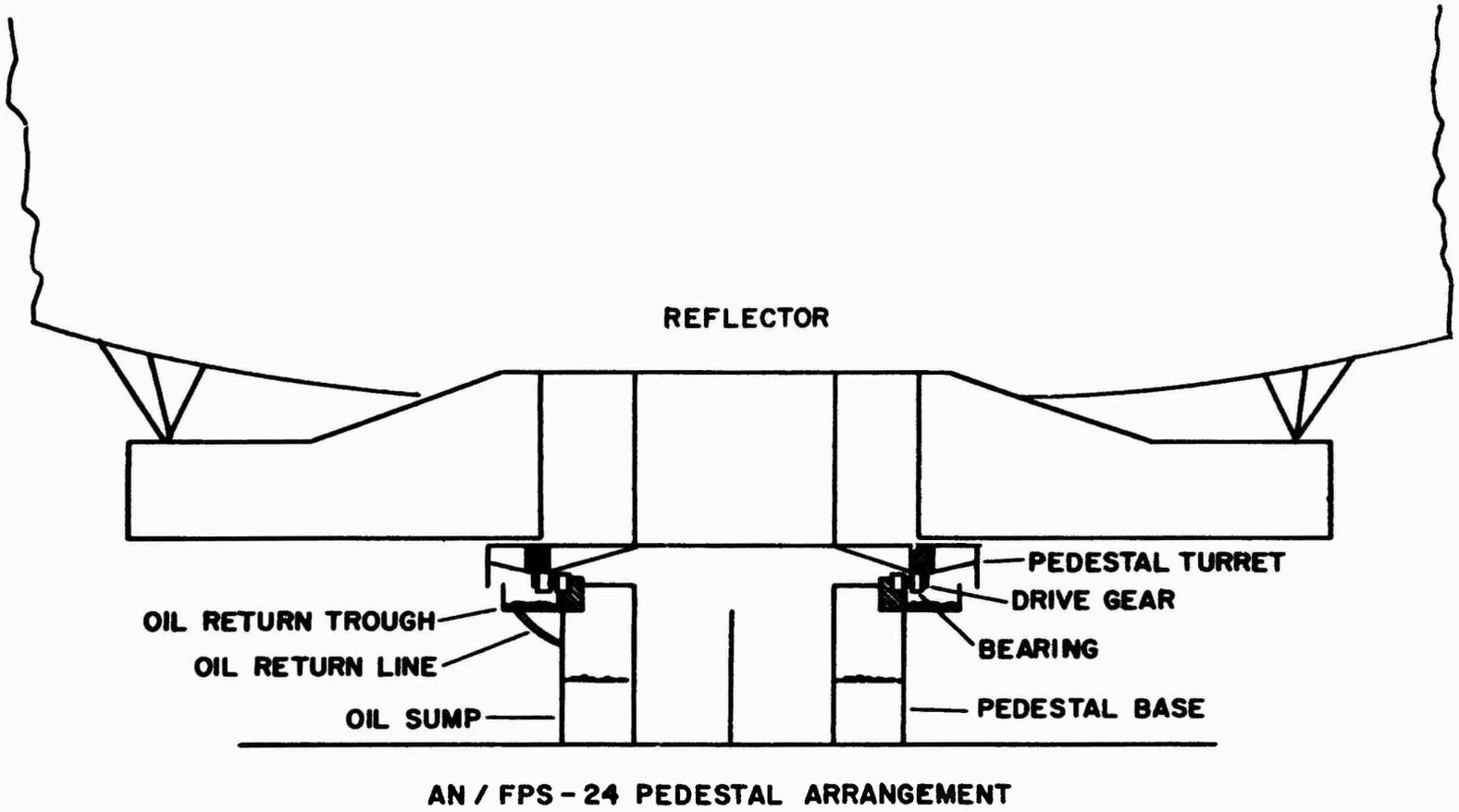

Figure 6. AN/FPS-24 Pedestal Arrangement

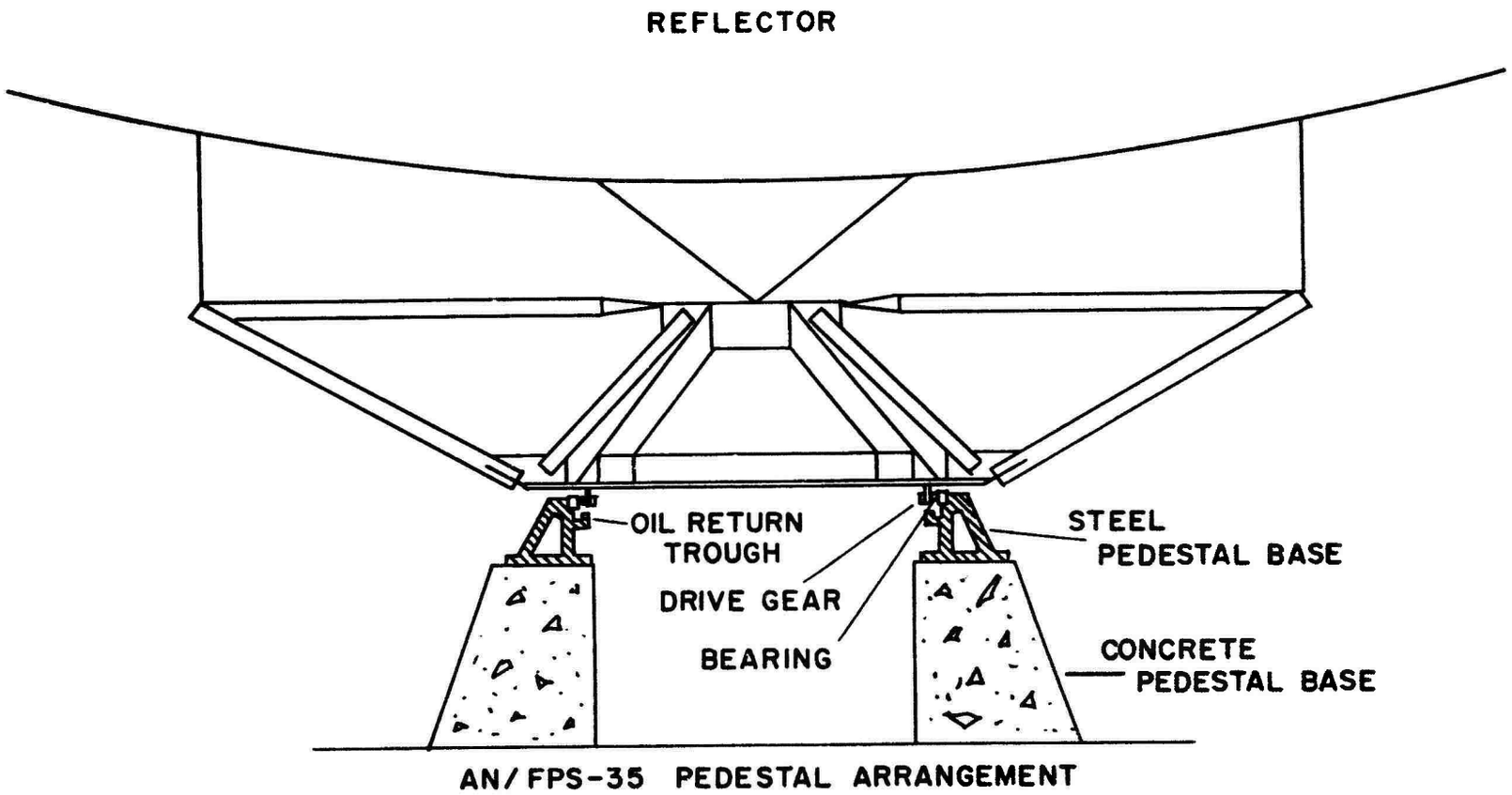

Figure 7. AN/FPS-35 Pedestal Arrangement

When the first AN/FPS-35 bearing failed at Thomasville, Alabama, in July of 1963 after about 17,000 hours life, similar efforts were initiated by Sperry Gyroscope Company, the AN/FPS-35 Radar prime contractor.

When it became apparent that initial corrective attempts were not going to succeed, the Air Force intensified its efforts to solve the problem. Experts from Air Force Material Laboratory, (AFML) Air Force Flight Dynamics Laboratory, (AFFDL) and Lincoln Laboratory met with personnel from Air Force Logistics Command, (AFLC) Aerospace Defense Command, (ADC) Electronic Systems Division, (ESD) and Rome Air Development Center (RADC) to formulate a program leading to eventual achievement of satisfactory bearing life. The opinions of independent consultants were sought through the use of two study contracts, AF 30(602)-3326 with A. B. Jones, and AF 30 (602)-3327 with T. Barish.. The result was the adoption of a basic program in April 1964 consisting of three major efforts, to which a fourth effort was added later. The first was the continuation of the already existing policy of incorporating incremental improvements into operational radars at the earliest opportunity, and is referred to in this report as the "Rolling Element Bearing Improvement Program". Such improvements were ordinarily proposed as the result of the cooperative efforts of RADC, AFLC, and prime contractor engineers working with using command and/or FAA site personnel.

For the most part, changes had to be confined to extremely low risk actions, since no test bed was available for evaluation before application in the field. Evaluation of individual changes was impossible, since all changes were incorporated as quickly as practical into all systems and no attempt was made to isolate them for purposes of evaluation. Since the average life of AN/FPS-24 bearings was about a year, and the desired life was ten years, the evaluation of the entire program was extremely time consuming even when improvements were made in parallel. Use of scale model techniques was not deemed conclusive because it was felt that size effects were in some way a major cause of the problem.

The second major effort was the design, fabrication, and evaluation of a two-row ball-roller bearing which had been judged by the previous study efforts to have the greatest potential for success in this application. The bearing was evaluated in the AN/FPS-35 since the lighter rotating load and larger bearing size of this radar made success more likely. Full scale accelerated life testing was performed at a facility constructed especially for this purpose to reduce the time required for evaluation. This effort is discussed in detail in Section III of this report.

The third effort was the development of a hydrostatic bearing for the AN/FPS-24. Because of the relatively high rotating weight and small bearing diameter in the pedestal for this radar, it was unlikely that satisfactory life could be achieved with a rolling element bearing. A different type of bearing was therefore considered. It consists of rotating and stationary surfaces which are separated completely by a thin film of flowing oil which is continuously supplied by an external pressure source. The surfaces were arranged to combine two thrust and one journal bearing in one unit. A cross-section of the bearing is shown in Figure 8. The advantages of this type of bearing for this application are:

- No metal-to-metal contact and very low stresses in the major components of the bearing. Therefore, the bearing neither wears out nor fails by fatigue.

- Supporting system of pumps, valves, etc. can be designed for high reliability and rapidly replaceable parts.

- Basic success or failure of the design can be established with confidence by a test program of reasonably short duration, i.e., in the order of three months.

The AN/FPS-24 hydrostatic bearing which was developed by Goodyear Aerospace Corporation was installed, tested, and successfully operated in the AN/FPS-24 radar at Oakdale, Pennsylvania. The test was terminated by catastrophic failure after 7821 hours of operation. The failure was due to human error which caused fail-safe drive brakes to be disabled, followed by interruption of prime power to the site. The details of this effort are contained in Reference (1).

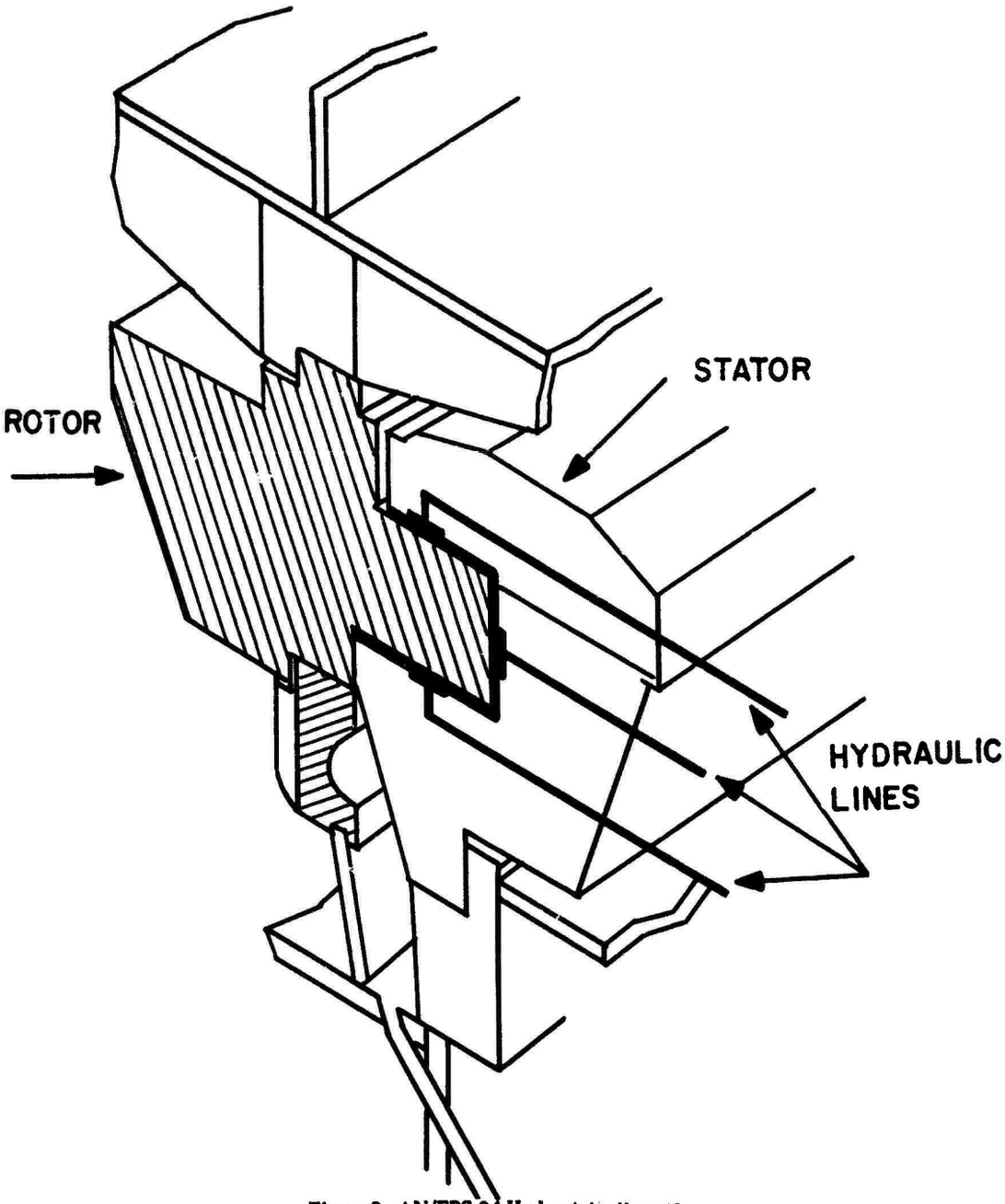

Figure 8. AN/FPS-24 Hydrostatic Bearing

A fourth effort which was undertaken at a later date was the result of weaknesses which became apparent in existing bearing life prediction techniques. This work was a direct outgrowth of Project 9142, although it was carried out under Project 5519. Two contractual efforts were performed to develop improved bearing life models. SKF Industries was the contractor for both efforts.

The first contract entitled "Development of Accurate Mathematical Models Predicting Life of Large Rolling Element Bearings," began in January 1967 and was completed in February 1968. This first effort investigated all the variables that affect bearing life and the failure mechanisms involved. Equations were then developed which contain parameters to account for those variables known to affect bearing life. The available life models do not consider such factors as surface and subsurface defects, lubrication parameters, surface roughness, ductility, and hardness – all of which affect bearing life.

The second contract entitled "Refinement and Evaluation of Bearing Load-Life Model," began in January 1968 and was completed in September 1970. This effort provided numerical values and methods for obtaining the various constants and functions used in the model. Field data and laboratory test data were used to accomplish this task.

The fatigue failure of a rolling bearing is assumed to be the consequence of a crack that grows with cycling and which initiates at any one of three types of defects. The three types of defects are defined as: (1) Subsurface defects such as inclusions or voids; (2) Surface imperfections such as furrows and pits; (3) Surface fatigue micropits originating from asperities which comprise the general "roughness" of a rolling surface. The bearing is considered to have failed when the crack grows to a certain critical size. In the new life model, the crack growth rate is a function of load, bearing size, and geometry-factors that are considered in present models – plus additional functions to account for material ductility, residual stresses, surface finish, material defects, lubricant viscosity, and hardness.

Because this model contains parameters which account for variables not previously considered, additional input data must be calculated or obtained before bearing life can be calculated. Assumptions regarding certain interactions or relationships had to be made during development of the model when the state of the art did not permit numerical computations. Therefore, before this model can replace the present Lundberg-Palmgren equation for calculating life, much experimental work must be performed in order to provide empirical data for evaluation of model parameters, and to provide additional input material, such as size and number of various subsurface defects for different bearing steels and size and number of surface defects for certain machinery operations.

The model's greatest value at this point is in making life comparisons for bearings that differ in those aspects of bearing design and operation that are now mathematically described.

The details of this effort are contained in Reference (2).

II. ROLLING ELEMENT BEARING IMPROVEMENT PROGRAM

From a consideration of information contained in the introduction, it is apparent that while there was, and is, some uncertainty as to the applicability of basic theory, as it was then understood, to extremely large bearings, a number of other factors could have an effect on bearing life and should be considered in an improvement program. For instance, while the existing pedestals limited changes in size to minor variations in height within the established envelope, some changes could be made in the type of bearing used, size and number of balls or rollers, contact angle, race conformity, cage design, etc. The bearing should be constructed of suitable materials and heat treated in such a way as to achieve the physical constants assumed in the design analysis. Installation procedures should insure that the bearing is installed to within proper roundness and flatness tolerances and the pedestal structure should insure that these tolerances are maintained under operating conditions. Further, the antenna pedestal design should insure that the proper internal load distribution in the bearing is maintained. Finally, the lubricant used should be adequate and the lubrication system should insure that clean lubricant in sufficient quantity is introduced at the proper locations in the bearing.

The following specific items were considered:

1. Bearing Type
2. Internal Design Details
3. Materials, Heat Treatment, Quality Control
4. Lubricant and Lubrication System
5. Internal Load Distribution
6. Installation Procedures and Equipment
7. Failure Detection

Each item will now be discussed in detail:

1. **Bearing Type** – The AN/FPS-24 and 35 pedestals employ a single bearing system, i.e., the rotating structure is supported by a single bearing of relatively large diameter. This bearing must provide restraint against axial thrust, radial load and moment load. Five types of bearings capable of providing this restraint which were considered for this application are shown in Figures 9 and 10.

a. Four Point Contact Ball Bearing

This type of bearing has been successfully used in many antenna applications. Ten of twelve AN/FPS-35s were originally supplied with it as were all of the twelve AN/FPS-24s. Total numbers used were eleven

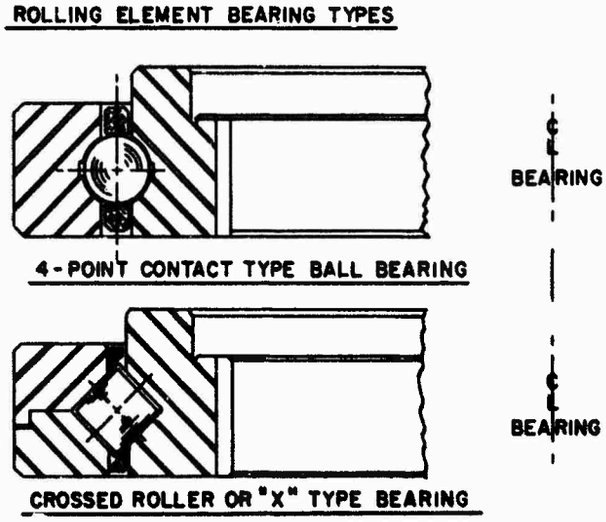

Figure 9. Rolling Element Bearings

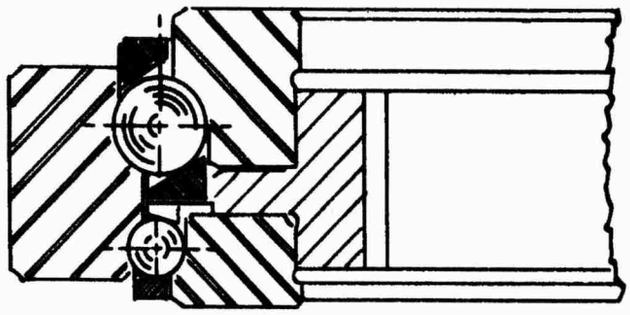

TWO ROW ANGULAR CONTACT BALL BEARING

TWO ROW ANGULAR CONTACT ROLLER BEARING

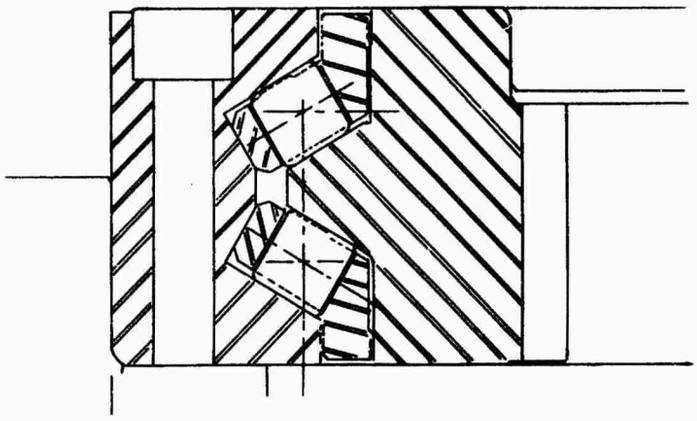

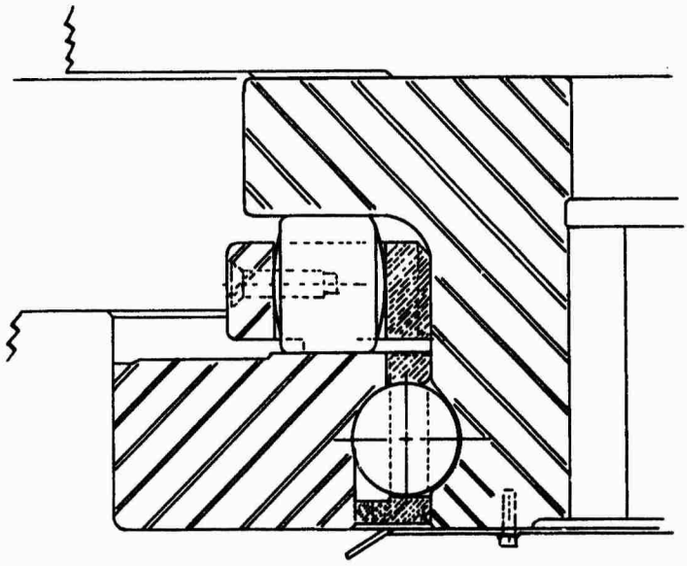

TWO ROW BALL-ROLLER COMBINATION BEARING

Figure 10. 2 Row Rolling Element Bearings

and thirty-two, respectively. The bearing can be considered to be two opposed angular contact ball bearings superimposed on each other. It is at its best when the predominant loads are moment or thrust. When a high proportion of radial loading is present, four-point operation occurs, resulting in excessive ball spin. While no quantitative assessment of the effect of ball spin on life is available, it is known to be detrimental. Therefore, when the studies of Barish and Jones indicated that a significant amount of ball spin would occur during AN/FPS-24 and AN/FPS-35 operation, the use of this type of bearing was discontinued.

b. **X-type or Crossed Roller Bearing**

This type has also been used extensively in antenna applications. Two of the original AN/FPS-35s were equipped with crossed roller bearings and following discontinuation of the use of 4-point contact bearings, nearly all AN/FPS-24's and 35's used this type. Total numbers used were 22 on the AN/FPS-35 and 15 on the AN/FPS-24. Crossed roller bearings can be considered to be two angular contact roller bearings superimposed on each other; the contact angle is 45° and alternate rollers are oriented such that their axes of rotation are at a 90° angle with each other. The equivalent of four point contact operation cannot occur. While this bearing has a theoretical life of more than four times as much as the 4-point contact ball type, in practice the life has been about twice as great, and part of the increase is probably due to the other improvements which are discussed in this report.

In addition to the standard cage type crossed roller bearing described above, two cageless full complement type crossed roller bearings were built. The first of these was installed at Winston-Salem, North Carolina, but locked up as soon as rotation was attempted. Had this bearing been installed in something other than an operational radar which was urgently needed for its primary mission, further effort could have been expended with the probable result that the bearing could have been made to work. Unfortunately, this particular design had to be abandoned at that time.

c. **Two Row Angular Contact Ball**

This type of bearing eliminates the possibility of 4-point contact operation and allows greater freedom in the selection of contact angle. One bearing of this type which had been procured as a spare for the Lincoln Labs CCM-Mark I Radar was installed in the AN/FPS-35 at Belton, Pennsylvania. While a minor problem developed after about one year, the bearing was not considered "failed" until 25,000 hours of operation occurred. This is the median (B50) life for all X-type bearings on AN/FPS-35s. No further procurement of this type was made, since the two row ball-roller bearing to be discussed below offered greater promise of success.

d. **Two Row Angular Contact Roller**

This bearing was considered but not tried because the next bearing discussed appeared to offer more hope of overcoming problems inherent in the pedestals.

e. **Two Row Ball Roller Bearing**

Studies indicated that a possible contributing cause of early failures was insufficient rigidity of the mounting structure and/or of the rotating race. The most severe deflections appeared to be in the radial direction and were aggravated by the use of angular contact bearings. The Barish Study recommended the use of a two-row bearing consisting of a pure thrust roller bearing to resist the downward load and an angular contact ball row to resist the smaller uplift and radial loads. This type of bearing was selected for evaluation in the AN/FPS-35 accelerated life test described in Section III of this report, and proved to be substantially better than either of the bearings in general use. The first of two bearings tested, which it was later determined was improperly hardened, had an operational life equivalent to 47,700 hours of operation in the field. The second bearing ran for a period equivalent to 189,500 hours in the field, approximately equal to its calculated B10 life. The best AN/FPS-35 crossed roller bearing failed to reach its calculated B10 life by a factor of 7. It should be noted, however, that the lubricant used in the test was of a higher viscosity than that used in the field, and this factor undoubtedly was responsible for part of the increase.

2. Internal Design Details

This refers to such things as size and number of balls, contact angle, hardness, surface finish, race conformity, cage design, etc. The original designs were based on current practice and experience at that time and were very similar to the Lincoln Laboratory CCM-Mark I design. The ball bearing had 35 degree contact angles, 53% race conformity, ball and race hardness of 58 to 63 on the Rockwell C scale, 16 micro-inch surface finish on ball paths, and 8 micro-inch surface finish on balls. Separator segments had four pockets each on the AN/FPS-24 and five pockets each on the AN/FPS-35, with removable keeper plates on the AN/FPS-24. Radial preload was 0 to .002 inch before application of load.

All of the ball bearings had one race which was split in the horizontal plane to permit loading the separators and balls into the bearing. Two of the AN/FPS-24 ball bearings had loading plugs to permit removal of individual balls from the installed bearing for inspection or replacement.

The roller bearings for the AN/FPS-35 were similar to the ball bearings as far as materials, surface finish, and hardness were concerned. The rollers were crowned by tapering the ends slightly, and on the first two bearings, the rollers had spherical ends of shallow curvature. Subsequent roller bearings on both the AN/FPS-24 and 35 had flat ends to provide better roller guidance. The amount of taper in the crown was increased also to eliminate edge loading which was detected in early failures.

The cages in AN/FPS-35 roller bearings were originally one piece circular rings of cold rolled steel. A problem was encountered in keeping the rings round with the result that the rings rubbed on the bearing races causing severe galling and scoring. Consequently, later AN/FPS-35 roller bearings and all AN/FPS-24 roller bearings were equipped with segmented separators.

AN/FPS-35 roller bearings had a split outer race, similar to the ball bearings previously described to permit assembly of the bearings. All AN/FPS-24 roller bearings had a loading plug which permitted assembly of the bearing without splitting the race. In addition, the AN/FPS-24 bearings had an outer race insert which permitted re-use of the bull gear as well as making possible use of different materials and heat treatment as will be described in the next section.

The Barish report suggested the use of a spring device to present bunching up of separators due to ball and roller speed variations. Such variations will be discussed later. This modification was not adopted because of the possibility of problems caused by broken springs, loosened parts, etc. It was felt that the problem could more safely be overcome by providing greater clearance in ball and roller pockets.

3. Materials and Heat Treatment

Through-hardening as normally employed was not possible because of the large size of the bearing races. Flame hardening was extensively used, and four bearings obtained from one supplier were induction hardened. Bearing steels such as SAE 52100 could not be heat treated in this manner because of excessive cracking. The steel used for flame hardened, and inductive hardened races was AISI 8660. Balls and rollers were SAE 52100 or similar alloys.

Failure analysis of the first AN/FPS-24 bearing to fail disclosed the presence of large amounts of a transformation product called Bainite in the races, which results from an improper cooling rate at the time of quenching. This resulted in the ball paths having hardness values as low as 46 Rockwell C. (Rc); 58 to 63 Rc is required. Previous experience indicated that this factor alone should have drastically reduced bearing life. The second AN/FPS-24 failed bearing was even worse. Hardness was only 34 Rc. Quality control procedures were not available at that time to enable the microstructure to be inspected for bainite content, and non-destructive hardness testing was not too reliable.

However, General Electric Company metallurgists adapted an available technique so that a replica of the curved race surface could be obtained on tape which could then be photographed under a microscope to obtain a conventional photo-micrograph. This could then be examined to determine the micro-structure of the surface. At about the same time, the Magnedyne Tester came into use which permitted reliable hardness readings to be obtained from the curved race surfaces. The replica tape technique was applied to all subsequently procured bearings for both radars and was also applied to existing AN/FPS-24 bearings in the field. AN/FPS-35 bearings could not be checked in the field because the race surfaces were not accessible. Ten of the total of thirteen AN/FPS-24 bearings existing at that time contained bainite in excess of an arbitrarily established limit of 10 percent in area. The AN/FPS-35 spare bearing which had not been installed also contained large amounts of bainite. On all subsequent bearing procurements quality control procedures were changed to include a check for bainite content and hardness was checked at 16 locations. Bainite content was kept below 10% and the existing hardness specification of 58 to 63 Rc was maintained.

One bearing supplier modified his facilities to permit through-hardening of rings large enough for AN/FPS-24 bearings. This facility became available at about the time the decision was made to use crossed roller bearings. Consequently, the crossed roller bearing was designed to have through-hardened inner race and outer race insert of MBI steel. MBI steel is a special bearing steel similar to SAE 52100. This through-hardening technique eliminated the bainite problem on AN/FPS-49 bearings. Although attempts have recently been made to adapt the same technique to the AN/FPS-35, they have not been successful thus far.

It should be noted that a comparison of the bainite content of the original AN/FPS-24 bearings with the life data which eventually became available did not disclose a correlation between bainite content and life. Although the sample size was small, it seemed likely that other causes of failure were predominant.

Failure analysis disclosed the presence of non-metallic inclusions in some rolling element, including, in addition to AN/FPS-24s and 35s, one AN/FPS-49failed bearing. At about this time, the bearing industry was publishing its findings of improved life through the use of exceptionally clean steel obtained from the vacuum remelting process. Accordingly, all balls and rollers were subsequently made of vacuum remelt steel. At a later date, the specifications were again amended to require the use of vacuum remelt steel races as well.

Failure analysis also disclosed the presence of grinding re-hardened areas on balls and rollers. A 100% Nital etch and subsequent inspection for rehardened areas on balls and rollers was also initiated. A spot check for rehardened areas on races was therefore employed.

Ball bearing separators were of bronze. Early roller bearing separators were of cold rolled steel. These were later changed to bronze because bronze on steel is a better bearing combination, and because identification of cage wear products is facilitated. The two row ball-roller bearing had bronze ball separators and ductile iron roller separators.

4. Lubricant and Lubrication System

When these radars were designed, there was no clear cut understanding of the role played by lubrication in large, slow moving, rolling element bearings subject to heavy loads. Reference (3) illustrates this by the divergent opinions expressed by lubrication experts. One opinion held by many, including the designers of these radars, was that the lubricant served to carry away heat and contaminating materials, including wear products. It also served to protect the bearing from corrosion and to provide positive lubrication for such sliding surfaces as separator-ball and separator-race interfaces. According to this opinion, the oil film was not sufficient to prevent metal-to-metal contact from taking place between balls or rollers and races. Others felt that hydrodynamic lubrication which would prevent such contact from taking place was possible and necessary, but the theory which would have permitted hydrodynamic lubrication to be assured in these radars had not yet been developed. In fact, the entire subject of the relationship of lubrication to rolling contact fatigue is extremely complex and many aspects of it are still not completely understood.

In the AN/FPS-24 and 35 designs, no attempt was made to establish the conditions of viscosity and surface finish which would be necessary to maintain hydrodynamic lubrication. Lubricants were selected on the basis of load carrying ability, anti-wear characteristics, lubricant life, and ability to operate satisfactorily over the widest possible temperature range. The lubricant selected for the AN/FPS-24 was MIL-L-7808, an aircraft turbine lubricant. E.F. Houghton and Co's Cosmolubric 1133A was formulated for use in large bearings and was selected for the AN/FPS-35. The lubrication systems are similar in that oil is pumped to a distribution system located such that the oil is released above the bearings and flows by gravity through the annular spaces between races, flows around the rolling elements, and drains out through the bottom of the bearing into a collection trough. In the AN/FPS-24 the oil then drains by gravity into a sump located between the walls of the pedestal base. The pump inlet is connected to three 149 micronstrainers which lie submerged in the sump. A water separator is included in the system. A flow interlock was located beyond the pump and was arranged to shut down the antenna system if the total flow fell to a dangerous level. The 8 to 9 gallons per minute (gpm) flow from the pump was subdivided such that approximately 1 gpm was delivered to the bearing, the remainder being evenly divided between the four drive gear boxes. The system was later modified to incorporate redundant full-flow 74 micron filtration on the upstream side of the pump, to provide separate flow interlocks in the bearing supply line and each gear box line, and to provide a lubricant heater to insure proper operation of the interlocks. In the AN/FPS-35 system, the oil drains from the collection trough to a 55 gallon drum which serves as a reservoir. It is pumped from there by a completely dual system of pumps, magnetic and cloth filters, pressure regulators, relief valve, etc. Flow for the system was set at 1½ to 3½ gpm. Only the bearing was lubricated by this system, the bull gear and gear boxes being lubricated by separate systems.

The lubricants and lubrication systems were re-studied six times. The findings of early failure analysis indicated no evidence of lubrication inadequacy. Later, however, other observers detected the presence of glazing on balls, rollers, and races. Glazing is a form of surface distress resulting from boundary lubrication, i.e. without complete separation of surfaces by the oil film.

Advanced understanding of the theory of hydrodynamic lubrication made it apparent that a lubricant of higher viscosity would be desirable. However, the necessity for gravity flow through the bearing and back to the sump or reservoir made it impractical to use oil of sufficiently high viscosity in these systems under low temperature conditions.

When the accelerated life test of a two-row bearing for the AN/FPS-35 was contemplated, SKF Industries engineers again recommended that a higher viscosity lubricant be used. Since the test was to be conducted indoors, where only minor temperature variations were to be expected a lubricant having a viscosity of 650 Saybolt Universal Seconds (SSU) at 100°F compared to 200 SSU at 100°F for the lubricant normally used in the AN/FPS-35 was selected. The lubricant was Houghton Cosmolubric 1790. Part of the excellent performance of these bearings was undoubtedly due to use of the higher viscosity.

While it seems apparent from the foregoing that a high viscosity lubricant should be used in future applications of this type, it should be pointed out that to do so requires the solution of the formidable problem of operation under widely varying temperatures. Further, while full film hydrodynamic lubrication is possible for systems such as the AN/FPS-24 and AN/FPS-35 which rotate continuously at a fixed rate, many antennas, such as those used with mechanical tracking radars, operate at widely varying rates, down to 0. For this type of operation, hydrodynamic films cannot be maintained. Designers should recognize that this factor should be considered when estimating life.

Severe cases of corrosion were detected in AN/FPS-24 bearings, caused by large amounts of moisture dissolved in the oil, in spite of the action of the water separator. The moisture was primarily the result of condensation on the cold walls of the sump. This problem was solved primarily by frequent sampling of the oil to detect moisture so that the oil could be changed if necessary. Attempts to use a petroleum base lubricant which would not absorb water like the synthetic MIL-L-7808, were stymied by the fact that the return trough and sump in the AN/FPS-24 had been coated by a material which was attacked by petroleum lubricants resulting in a serious contamination problem. This could only have been overcome by completely dismantling each of the antennas and stripping and sandblasting the pedestals. This was not considered to be warranted.

5. Internal Load Distribution

In the technical background it was pointed out that the determination of load distribution within the bearing that is used in the life calculation is based on the assumption that the bearing races lie in a perfect plane and are prefectly round, and further, that these conditions continue to exist under all load conditions. It is obviously impossible for any of these conditions to be achieved in practice. Manufacturing tolerances selected (0.0025" and 0.003" on AN/FPS-24s and 35s, respectively, for both roundness and flatness) represent a compromise between what could reasonably be achieved by existing machining practices and the accuracy required for negligible degradation. Even though a pedestal might be manufactured within the prescribed tolerance, improper installation procedures could easily triple existing distortions, especially in flatness. In addition, the mounting structures were designed to be sufficiently rigid to provide reasonable load distribution in accordance with engineering estimates, but without quantitative assurance that this was true. Finally, optimum distribution of load within the bearing is dependent upon the external steady-state load being as nearly centered as possible.

In this program, internal load distribution was investigated by examining the following areas:

a. Roundness and flatness of bearings after installation
b. Distortions occurring in the pedestal under load
c. Actual loads in individual rolling elements
d. Dynamic balance of antennas
e. Temperature variations
f. Field observations

a. Roundness and flatness of bearings after installation

In order to accurately evaluate pedestal base and turret seats, as well as the installed bearing, it was necessary to develop instrumentation capable of making measurements on diameters up to 13½ feet with an accuracy of a few ten-thousandths of an inch. These measurements had to be made in the field under all climatic conditions. With the basic design used by Lincoln Laboratory on the CCM-Mark I Radar as a starting point, equipment was developed which could make the necessary measurements to the required accuracy on either an AN/FPS-24 or 35. This test equipment consisted of a rigid support structure which was fastened into the concrete tower deck immediately below the pedestal. This structure terminated in two horizontal machine slides stacked vertically and mounted at right angles to each other. To the top slide was fastened a precision spindle supported by four leveling screws with its axis of rotation vertical. To the top of the spindle was fastened a counter balanced radial arm to the end of which interchangeable heads could be attached. One head provided the means of attaching dial indicators for measuring horizontal and vertical run-outs. The other mounted a grinding head by means of horizontal and vertical slides to permit grinding on inside or outside diameters and upper or lower horizontal surfaces. The measuring-grinding operation is performed with the turret or rotating structure, including the antenna, jacked up directly over the base. The equipment includes an insulated enclosure to seal the opening created by raising the pedestal, and heating equipment to provide a measure of temperature control within the pedestal. The basic components of the equipment are shown in use at the RADC bearing test facility in Figures 11 and 12. After the equipment became available, each pedestal and bearing was checked at the time of the next bearing change and at all succeeding changes, and was corrected where necessary.

The comparatively light cross section of the bearing allows it to assume a shape other than circular when it is not confined or bolted down. Since the tolerances on bearing seat and bearing are such as to allow several thousandths of an inch looseness, it is theoretically possible to optimize the shape of the bearing before torquing the bolts which fasten it to its seat. This is accomplished by dropping the bearing into its seat and measuring the roundness for various positions of one race with respect to the other until the best position is found. This assumes that both races tend to be elliptical and that some orientation of one with respect to the other will result in an optimum condition of roundness. The bearing is then tightly bolted in place. This procedure was employed many times, but in the AN/FPS-24 and 35 pedestals, little or no clearance actually existed, and the bearing simply took the shape of

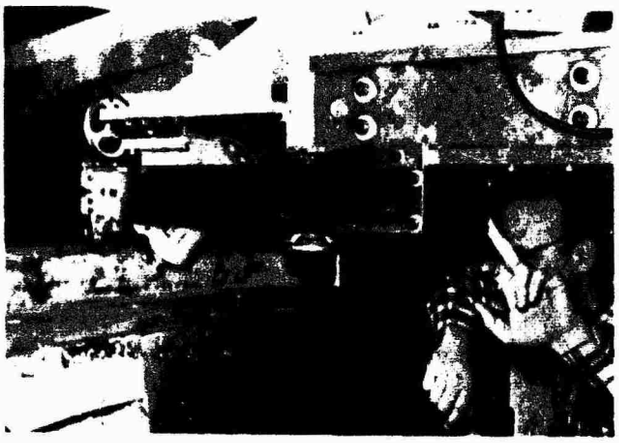

Figure 11. Precision Grinding of Bearing Seat

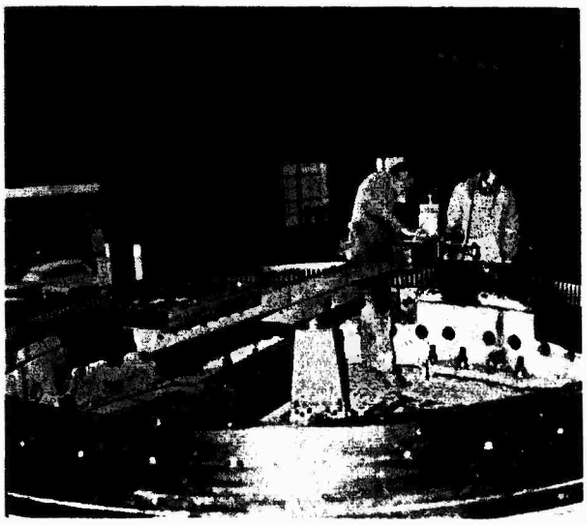

Figure 12. Precision Measurement of Bearing Flatness

its seat. This is preferable, since the bearing race is then fully backed up by its seat and does not depend on bolts to hold it in shape.

Most of the pedestals required some correction. Grinding of pedestal bases was very successful, resulting in achievement of installed bearing tolerances for AN/FPS-24s and 35s of 0.005" and 0.006", respectively, as required. Grinding of turret seats was less successful due to distortions caused by the fact that the heavily loaded turret was supported at four points by the jacks. Substantial improvement in runouts resulted nevertheless.

b. **Distortion occurring in the pedestal under load**

The first attempt to evaluate pedestal rigidity on the AN/FPS-24 pedestal was made jointly by McKiernan-Terry Corporation and the General Electric Company's General Engineering Laboratory. This attempt consisted of an experimental program carried out on a production pedestal at McKiernan-Terry prior to installation in the field, and an analytical study. In the experimental program a series of measurements were made on bearing motions, pedestal motions, and pedestal strains made by dial indicators, auto-collimators, micrometers, theodolites, and electrical strain gauges. Readings were taken at various stages of the assembly of the pedestal base, bearing, turret, outriggers, simulated feed horn, and simulated antenna. Results of the various methods of measurement were not consistent with each other or with the analytical work, and interpretation of the data proved to be difficult. However, no significant load concentrations seemed to be indicated, and while it was suspected that flexibility of the pedestal was to some extent reducing bearing life, no action was taken, partly because of the difficulty and great expense involved in making a significant change in stiffness, when there was no positive assurance that it was necessary.

c. **Actual Loads in Individual Rolling Elements**

An attempt was made to measure rolling element load distribution in January 1965. The General Electric Heavy Military Electronics Department under an Air Force contract attempted to statically measure individual ball loads in an actual antenna pedestal. A strain-gauge type load cell constructed from a 3½ inch diameter ball (see Figure 13) was inserted into the bearing in place of a regular ball in 83 different positions. This was accomplished for two different antenna positions and for two different load conditions. Curves of load and contact angle vs. ball position were plotted and compared with calculated values. While the load distribution was different from the theoretical distribution and the expected flexibility was indicated, life calculations for the actual distribution did not yield significantly different results from those for the theoretical distribution. This test program is covered in detail in Reference (4). An additional purpose of this contract was to determine the feasibility of a device to measure actual dynamic load distribution – i.e. to measure actual ball loads while the antenna was rotating. The principle utilized in making the measurements is that when an object, such as a ball or roller, is subjected to a stress, resulting in a strain or deformation about any axis, there are resulting deformations about all other axes. A ball bearing separator was modified to incorporate a caliper-like device containing four variable reluctance linear transducers in such a way that the diameter of a ball could be continuously measured while the antenna was rotating (Figure 14). The measurements were made along axes at known angles with respect to the axis along which the load was applied. The device was calibrated by applying incremental known loads to a ball in a test fixture and recording the corresponding deflections as indicated by the transducers. The system was accurate to within 300 pounds. Loads to be measured could be expected to range up to 8000 pounds. The separator including the caliper device was to be installed in a bearing in an operational radar. The output of the transducers was suitably processed and recorded, along with an indication of ball location, turret location, wind velocity and direction, and the location of both bearing flame gaps. The flame gap is a relieved portion of each bearing race. Since each ball is momentarily unloaded as it passes through this area, a no-load check of the caliper calibration was available each time the measured ball passed through one of these flame gaps.

The initial investigation confirmed the feasibility of the system and a contract was awarded to the General Electric Company to make dynamic measurements of individual ball loads in an operating antenna bearing. Several practical problems developed during the course of the test. Most important of these were inability to

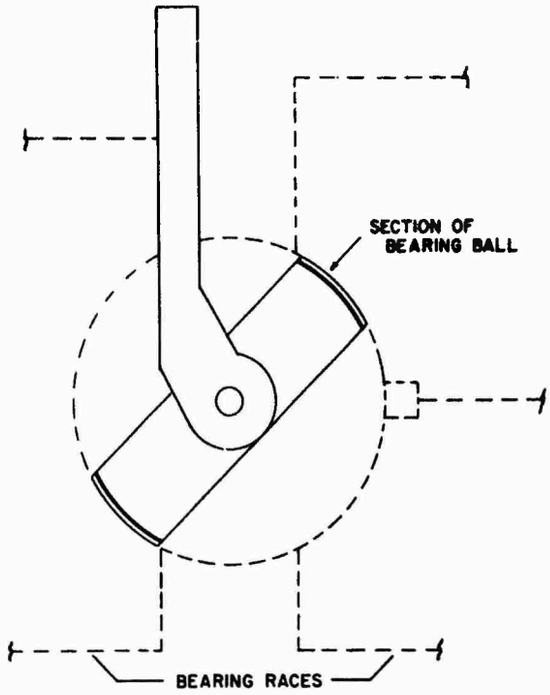

Figure 13. Static Load Cell

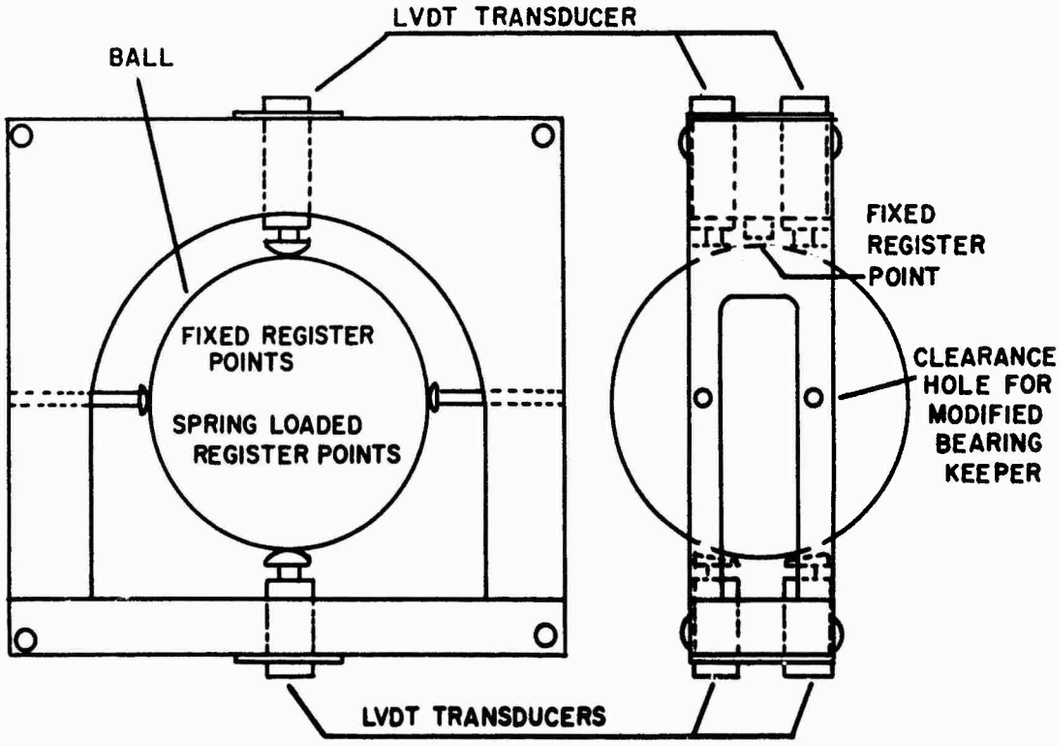

Figure 14. Dynamic Ball Caliper

maintain exact desired location of caliper with respect to ball, lack of sphericity of ball, and interference problems due to lack of availability of magnetic shielding on the transducers. All of these problems could have been reduced or eliminated in a laboratory environment, or with more time even in the operating environment. However, due to the urgent operational need for the radar it was not possible to provide the time required to solve the problems. Data obtained was incomplete and inconclusive but did tend to show again that load concentrations due to pedestal flexibility do exist. No quantitative determination of their effect on bearing life could be made, however. This test program is covered in detail in reference (5).

d. Dynamic Balance of Antennas

The production versions of both antenna systems were designed to be balanced statically, and an unbalanced moment therefore existed when they were rotating. The effect of this unbalance on life was calculated to be of the order of 10 percent for the AN/FPS-24. In spite of the fact that this promised a relatively slight improvement, it was decided to dynamically balance the prototype AN/FPS-24 at Eufala, Alabama, where a static unbalance existed as well. Balancing was accomplished in May 1964 by adding weight to the horn boom until bearing runouts as measured dynamically by transducers attached to the stable base for the previously described measuring grinding equipment were reduced to a minimum. Bearings subsequently installed at this site showed a substantial life increase at least part of which was attributable to balancing. Eventually, all AN/FPS-24 antennas were balanced in the same manner, but the results were not as dramatic.

The AN/FPS-35 antenna at Boron, California, was checked statically by weighing the entire rotating structure on aircraft load cells. The static balance was found to be nearly perfect. No further action was taken. The system of dynamic balancing used on the AN/FPS-24 could not be applied to the AN/FPS-35 because of the inaccessibility of the bearing when the antenna is in operating condition. Further, because of the location of the feed horn with respect to the reflector, static and dynamic balance were more nearly equal for this antenna.

e. Temperature Variations

Temperature gradients in the bearing an in its supporting structure could cause substantial changes in preload. On large rings such as these, a temperature difference of 1°F. between rings causes a differential dimensional change in the order of .001". However, evaluation of this factor is extremely complex because gradients throughout the pedestal base and turret have varying effects on the bearing and it would be practically impossible to deduce through temperature measurement the final condition of the bearing. A study of bearing lives at the various sites did not disclose any relationship between life at extremely cold sites where maximum differential temperatures would be expected to occur and sites at more moderate locations. Therefore, no attempt was made to isolate this factor with respect to rolling element bearings.

f. Field Observations

In addition to the specific efforts described above, observations made by operating personnel and by engineers in making measurements as part of the bearing change process, tend to confirm the fact that undesirable distortions of the pedestal and bearing do occur under load. These have been confined largely to the AN/FPS-24 primarily for the reason previously stated – i.e. inaccessibility of the AN/FPS-35 bearing when the antenna system is assembled. The most pronounced distortion is a twisting of the outer race in a plane normal to the direction of ball travel. This is probably due to the fact that the outer race is supported only by a relatively shallow pilot, the integral gear preventing deeper engagement. Primary support is by 48 bolts which fasten this ring to the horizontal bearing seat. Excessive distortion of this ring in this manner was predicted by the Barish study. It has been confirmed in the field by excessive vertical motion of the outer race when the turret and antenna are lowered into place and by variations in gear-pinion tooth engagement patterns. Since the amount of twist is not uniform around the circumference of the bearing, it results in varying degrees of change in contact angle. This in turn results in variations in ball speed as the bearing is rotated, leading to large separator forces and causing balls to skid rather than roll. The results of large separator forces have been observed as a "bunching up" of groups of separators, and in separators being forced upward when keeper plates are removed.

6. Installation Procedures and Equipment

Probably the most serious impact of bearing failures was the amount of time a radar remained inoperable while the bearing was being changed. Anything that could be done to speed up the process was extremely desirable. Steps that were taken to make bearings more readily available where and when needed will not be covered here in detail, except to note that at times incorporation of recommended improvements into bearings had to be delayed because of overriding delivery considerations. Procedures that were developed to permit prediction of failures in advance to permit necessary change preparations to be made will be discussed in the next section. The biggest single factor in reducing down time to one third of what it had previously been was the development of jacking equipment to permit raising the entire antenna system off of the bearing with only minor disassembly, consisting of removal of antenna surface panels from the reflector tips to reduce wind loads. Prior to this, the entire rotating assembly had to be disassembled and removed. The heart of the equipment was six 100 ton screw jacks for the AN/FPS-35 and four 100 ton screw jacks for the AN/FPS-24. In both cases, the equipment was designed to withstand safely 60 mile per hour winds when in the fully raised and restrained condition, although the actual jacking process was limited to much lower wind velocities, i.e., 10 to 15 mph. Figure 15 shows the AN/FPS-35 at Thomasville, Alabama, during the jacking process at the time of the initial use of the AN/FPS-35 jacking equipment.

7. Failure Detection

The early failures were detected when the accumulation of debris resulting from fatigue deterioration of races clogged lube pump inlet strainers causing interlocks to shut down the antenna, or when comparatively large spalls from balls generated enough noise to cause operating personnel to investigate. By the time either of these situations occurred, the condition of the bearing was sufficiently bad so that operation had to be stopped immediately and the bearing change cycle initiated. It was desirable that imminent failure be detected early so that preparations, such as the necessary assembly of men and materials at the site, could be accomplished before the unit had to be shut down. Accordingly, an inspection was conducted at 300-hour intervals in which all accessible parts of the bearing, gear boxes, lube system, and interlocks, were inspected for indications of impending problems. The primary indicators were metallic particles. Ball damage or outer race damage on AN/FPS-24s could be seen by direct inspection through inspection ports. Debris could be recovered from inspection plates on the bottom of the lube sump. In the AN/FPS-35, debris could sometimes be found in the filters or by a laborious search of the oil return trough beneath the bearing with a magnet suspended from a rigid wire. The amount and location of debris, together with analysis to determine the kind of metal which in turn identified its source as race, ball or separator material, provided information on which to base the decision as to when to shut down for bearing replacement.

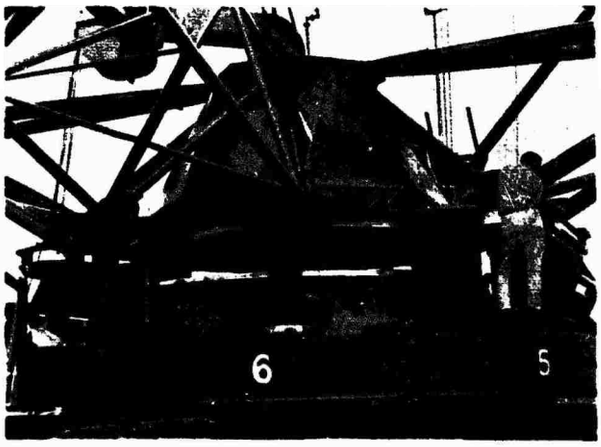

Figure 15. AN/FPS-35 Antenna System Rotating Components Being Raised on Jacks

Oil analysis was performed periodically at some sites from the beginning of radar operation. When the Spectrometric Oil Analysis Program (SOAP) produced spectacular results in predicting jet engine failures, it was adapted to the radar antenna bearing program. Collection of an oil sample at regular intervals at each site for analysis at the Materials and Processes Laboratory of the Directorate of Maintenance at Sacramento Air Material Area (SMAMA) was included in the 300-hour inspection procedure. The system is useful in detecting excessive contamination by water or other foreign material. In-Service Engineering at SMAMA accumulates and analyzes the SOAP data for the purpose of making long range predictions of bearing life at each site. The success of the program is somewhat limited by the fact that fatigue rather than wear is the primary failure mode, and the amount of wear products suspended in the oil is not as indicative of remaining life as it would be if wear failures were more predominant.

Six of the AN/FPS-24s and one AN/FPS-35 were provided with transducers and recording equipment for recording dynamic axial and radial bearing run-outs. It was the hope that run-outs recorded periodically during the life of a bearing would show trends that would eventually permit earlier prediction of failure. Recordings for several bearings over a number of years failed to produce any relationship with impending failure, probably because little wear occurs during the life of these rolling element bearings.

A further discussion of failure detection appears in Section III, Accelerated Test Program.

8. **Results**

The primary end result of the rolling element bearing improvement program has been a substantial increase in life expectancy of AN/FPS-24 and 35 bearings, and a substantial decrease in the time required for the bearing change cycle. The life increase can best be summarized as follows:

B10 and B50 Lives of Groups of Bearings (Hours)

	AN/FPS-24		AN/FPS-35	
	B10	B50	B10	B50
Original Ball Bearings	3900	8200	6200	14000
Final Roller Bearings	7900	17000	18000	25000

See Appendix for a summary of the lives of all AN/FPS-24 and 35 bearings.

Equipment and techniques which have been described earlier have resulted in the bearing change cycle being shortened to between two and four weeks.

In addition to these specific results, additional achievements of the program are summarized below:

- Application of replica tape technique to non-destruction metallurgical investigation in the field.
- Development of precision tooling for measurement and grinding of large diameters in the field.
- Development of antenna jacking systems.
- Partial development of equipment and techniques for measuring individual ball loads statically and dynamically.

SECTION III. ACCELERATED TEST PROGRAM

A test program on large bearings was initiated by RADC engineers at Griffiss Air Force Base in February of 1967. A total of three bearings were tested. One was a conventional "X" bearing, identical to those currently used in the AN/FPS-35 Radar Systems, and two were the new "two row" bearings. In addition to the in-house testing, four contractual efforts supporting the program were performed. (1) Failure Detection Effort with General Electric Company; (2) Failure Analysis Effort with SKF Industries; (3) Facility Construction with H.R. Beebe Company and (4) Bearing Procurement and Installation with Sperry Gyroscope Company.

1. Test Facility

a. Test Rig

The purpose of the test was to evaluate the performance of a new type, two row bearing and to compare this bearing with the conventional "X" type bearing currently used in the field. To eliminate the effects of varying temperatures and winds such as would occur at a field installation, it became necessary to construct the test rig in an enclosed building. In order to simulate the wind load, a structure with a total height of 47 feet was required. The test bearings were supported in a manner identical to the field bearings. Excess AN/FPS-35 components consisting of pedestal base, pedestal turret, side and rear outriggers, two complete drive trains, and a lubrication system obtained from the AN/FPS-35 sites at Fortuna, North Dakota, and Manassas, Virginia, were used as part of the test rig. The use of actual radar system components permitted the test bearings to be loaded and lubricated in the same manner as in the field. Instead of a radar reflector being supported by the bearing, a triangular load structure was constructed. One end of a cable was attached to a small radial bearing at the top of the load structure and the other end was attached to a dead weight platform to apply the overturning moment and radial load. The dead weight consisted of 60,000 pounds of steel plates. Additional vertical thrust load was provided by adding tanks filled with water. Figure 16 shows the test rig. Two 100 HP electric motors were used to drive the rotating structure. Six are used in field installations.

In order to reduce the time to failure, the loads that were applied to the bearings were equivalent to the maximum operational design loads. The loads were 52,000 lbs. radial; 190,000 lbs. thrust; and 1,200,000 ft. lbs. overturning moment. These loads were applied continuously during the test, whereas in the field maximum wind and ice loads are expected to occur only 1 percent of the time. This procedure accelerates failure, resulting in a life reduction factor in the order of 175 to 1. Figure 17 shows a schematic of how the external loads are applied to the bearing.

The test rig was designed in-house by the Mechanical Engineering Section. Construction of the rig took place from June 1966 to January 1967. Sperry Gyroscope Company provided assistance in installing bearings, lubrication system, and drive system, including measuring and grinding of pedestal bearing seats. Flatness and roundness measurements showed that the bearing support did not meet the 0.003 inch total indicator reading requirement. Therefore, the bearing support was flame sprayed with molybdenum and reground to the specified tolerances. A jacking mechanism was designed to raise and support the hub and load structure while the bearing is inserted or removed from the rig. Before testing the bearings, the weight and location of the center of gravity of the rotating hub, load structure, and water tanks were determined by weighing the rotating mass with three strain gauge load cells.

b. Operation of the Test Rig

Initially, it was desired to operate the test rig 24 hours a day. However, several structural failures occurred, and the rig could only be operated 8 to 12 hours a day. Most of the structural failures consisted of broken bolts and cracked members at certain joints of the triangular load tower. The rig was inspected every day or two during the test program.

Oil analysis was performed periodically at some sites from the beginning of radar operation. When the Spectrometric Oil Analysis Program (SOAP) produced spectacular results in predicting jet engine failures, it was adapted to the radar antenna bearing program. Collection of an oil sample at regular intervals at each site for analysis at the Materials and Processes Laboratory of the Directorate of Maintenance at Sacramento Air Material Area (SMAMA) was included in the 300-hour inspection procedure. The system is useful in detecting excessive contamination by water or other foreign material. In-Service Engineering at SMAMA accumulates and analyzes the SOAP data for the purpose of making long range predictions of bearing life at each site. The success of the program is somewhat limited by the fact that fatigue rather than wear is the primary failure mode, and the amount of wear products suspended in the oil is not as indicative of remaining life as it would be if wear failures were more predominant.

Six of the AN/FPS-24s and one AN/FPS-35 were provided with transducers and recording equipment for recording dynamic axial and radial bearing run-outs. It was the hope that run-outs recorded periodically during the life of a bearing would show trends that would eventually permit earlier prediction of failure. Recordings for several bearings over a number of years failed to produce any relationship with impending failure, probably because little wear occurs during the life of these rolling element bearings.

A further discussion of failure detection appears in Section III, Accelerated Test Program.

8. **Results**

The primary end result of the rolling element bearing improvement program has been a substantial increase in life expectancy of AN/FPS-24 and 35 bearings, and a substantial decrease in the time required for the bearing change cycle. The life increase can best be summarized as follows:

B10 and B50 Lives of Groups of Bearings (Hours)

	AN/FPS-24		AN/FPS-35	
	B10	B50	B10	B50
Original Ball Bearings	3900	8200	6200	14000
Final Roller Bearings	7900	17000	18000	25000

See Appendix for a summary of the lives of all AN/FPS-24 and 35 bearings.

Equipment and techniques which have been described earlier have resulted in the bearing change cycle being shortened to between two and four weeks.

In addition to these specific results, additional achievements of the program are summarized below:

- Application of replica tape technique to non-destruction metallurgical investigation in the field.
- Development of precision tooling for measurement and grinding of large diameters in the field.
- Development of antenna jacking systems.
- Partial development of equipment and techniques for measuring individual ball loads statically and dynamically.

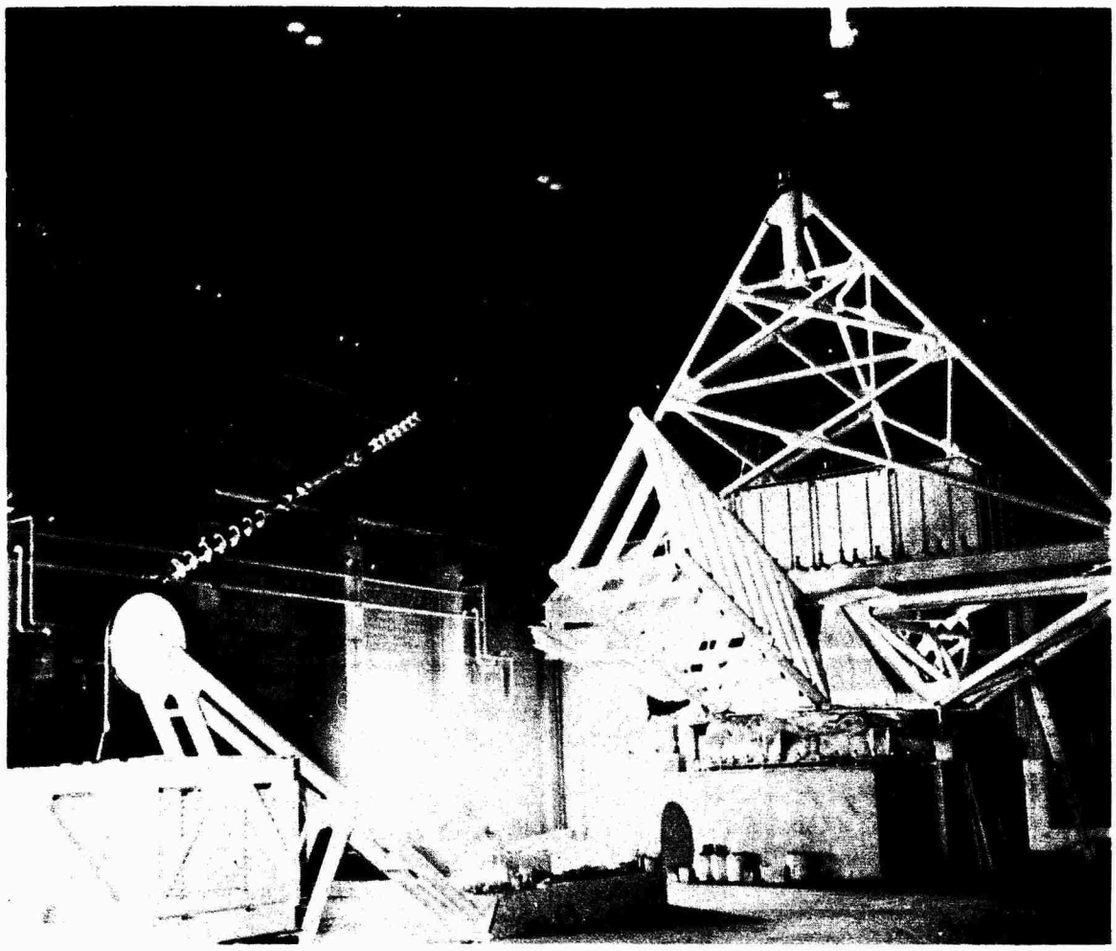

Figure 16. Accelerated Test Rig

A second jacking mechanism allowed the dead weight platform to be raised thus eliminating the simulated wind load when desired. However, the bearings were tested at full load throughout the program.

The test rig could be operated at either ¼ or 5 rpm, with the latter the speed used for the test.

A limit switch was installed at the dead weight platform that would shut off the drive motors if the load platform dropped or lifted beyond preset limits. Thermal overload and oil pressure sensors were part of the control system also.

2. Failure Detection Efforts

A rolling element bearing is considered to have failed when a subsurface crack propagates to the surface of either the race or a rolling element and a small chip of metal is removed from the surface. Therefore, in order to compare the lives of the test bearings it was necessary to determine the point in time when the first spall was formed and to determine the condition of the bearing without stopping the test or disassembling the bearing. It was also

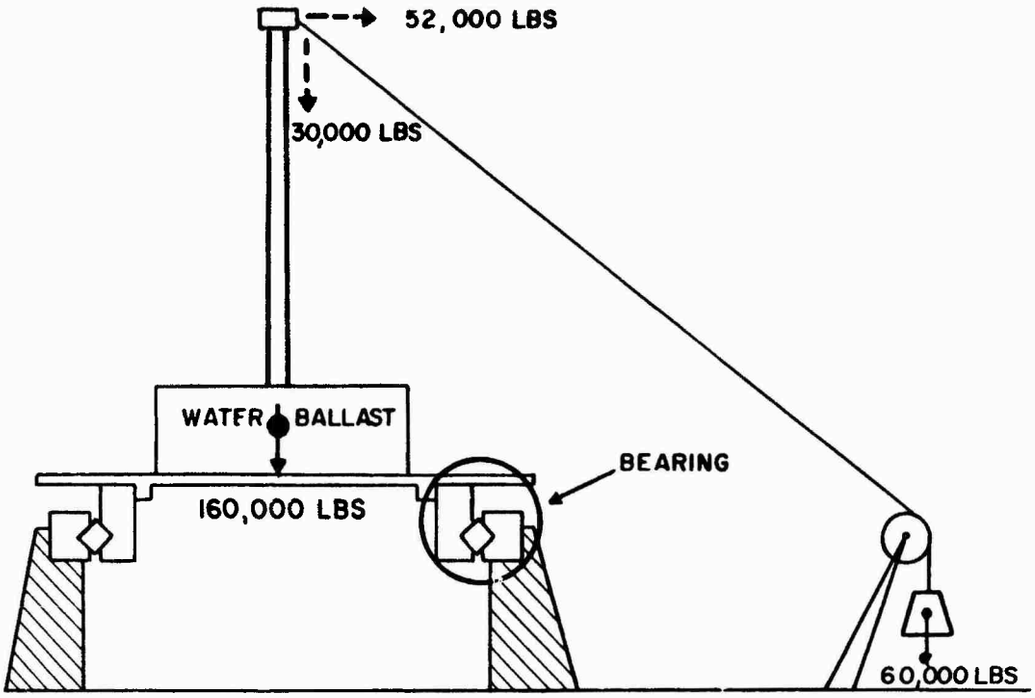

Figure 17. Bearing Test Facility Schematic

desired to have the bearing failure analysis performed before extensive damage occurred in order to more easily determine the mode of failure and the point where damage initially occurred.

Three failure detection methods were performed during the test: (1) Lubrication oil analysis; (2) Search of the oil drainage trough for metal chips; and (3) Mechanical vibration analysis.

a. Lubrication Oil Analysis

After the lubrication oil flows through the bearing, it collects in a trough below the bearing. A tap was placed in the oil trough where the oil could be drained out and collected in a bottle. These oil samples were sent to McClellan AFB where they were analyzed by the spectrometric technique for metals which may be suspended in the oil. The metals detected are aluminum, iron, chromium, silver, copper, tin, manganese, nickel, magnesium and silicon. The results of an analysis gives the quantity of these metals suspended in the oil in parts per million (PPM). Of these metals detected, iron is most important since a large increase in the amount of iron in the lubrication oil indicates removal of bearing material-either from the races or rolling elements. The following table shows the results of all the oil samples taken from the start of the test of the first two row bearing until the bearing was considered failed.

As can be seen, the results of the oil analysis do not show any identification of bearing failure. Similar results were obtained for the other two bearings. The most probable reason for the inability of this method to detect failure is that the mode of failure is fatigue rather than wear.

b. Search of the Oil Trough

Any steel particles that are too heavy to be carried by the oil back to the oil drum and filters settle in the oil trough under the bearing. Periodically, the trough was searched with a magnet to pick up such particles.

TABLE I

OIL SAMPLE	DATE	BEARING HOURS	PPM OF IRON
1	29 Feb 68	1.1	5
2	5 Mar	8.1	1
3	6 Mar	17.6	1
4	7 Mar	25.7	2
5	8 Mar	33.4	2
6	11 Mar	36.2	6
7	8 Apr	43.9	2
8	9 Apr	50.1	3
9	10 Apr	56.4	2
9A	11 Apr	62.0	3
10	15 Apr	66.0	1
11	17 Apr	83.0	1
12	3 May	102.0	2
13	26 Jun	131.8	2
14	3 Jul	170.3	3
15	1 Aug	226.4	3
16	7 Aug	252.9	3

This effort was time consuming and could not be performed while the test was in operation. When metal flakes or chips were picked up, they were sent to McClellan AFB for analysis. It generally took two or three weeks before the results of the analysis were known. One sample took seven weeks before its results were known. However, searching the oil trough for chips was an effective method of detecting fatigue damage to the bearings.

c. **Mechanical Vibration Analysis**

The mechanical vibration analysis program consisted of the collection of vibration data from the test bearing and the reduction of this data at General Electric Company in Schenectady, N.Y.

The collection of vibration data was made once a day throughout the test program by RADC personnel. The vibration data was picked up by six accelerometers (mounted to the stationary, outer race of the bearing), suitably amplified, and recorded on magnetic tape. Figure 18 is a block diagram of the data acquisition system. Figure 19 is a picture of the data collection equipment. The data from each accelerometer was recorded on one channel of a two channel recorder. One minute of data per accelerometer was recorded in sequence. A timing signal was recorded on the second channel of the recorder. The timing signal was created by four magnets mounted on the rotating hub, at 90° intervals. A magnetic pickup head was mounted on the stationary race of the bearing.

Several techniques were used to analyze the vibration data. The simplest technique was direct viewing of the raw data by means of an oscilloscope or an oscillograph. When a spall has formed on either the inner race, outer race, or rolling element of a bearing, an impact is generated whenever the spalled area is contacted. Figure 20 shows the basic bearing malfunction signatures. The time between impacts can be calculated by knowing the rotational speed, size of the bearing, and size and number of rolling elements. Unfortunately, extraneous signals from other sources tend to mask the impact signals.

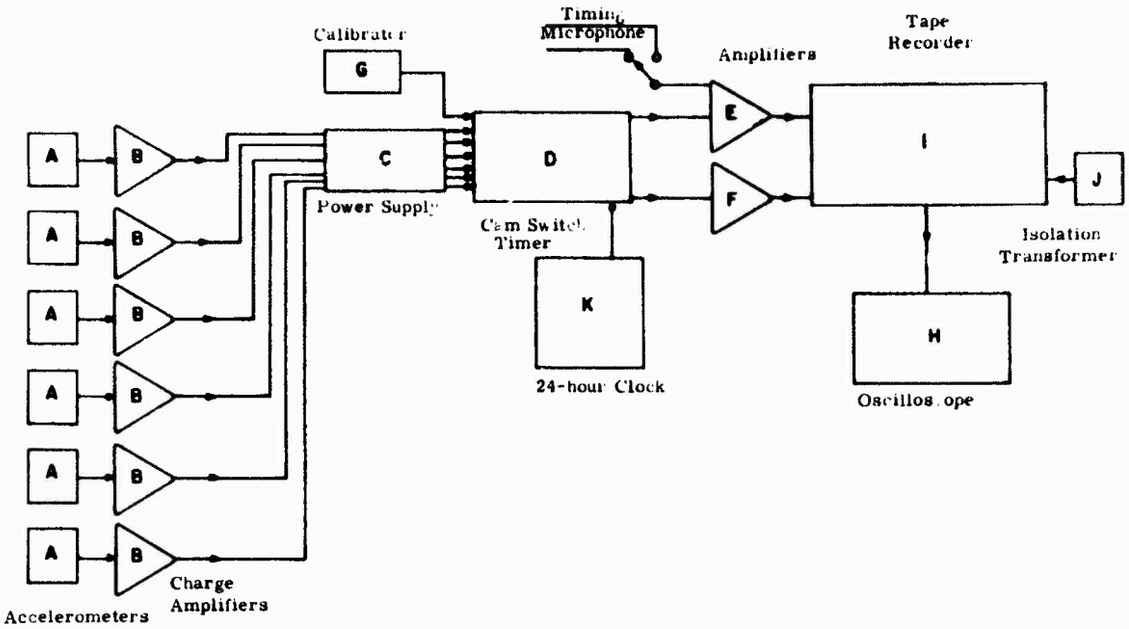

Figure 18. Data Acquisition System Block Diagram

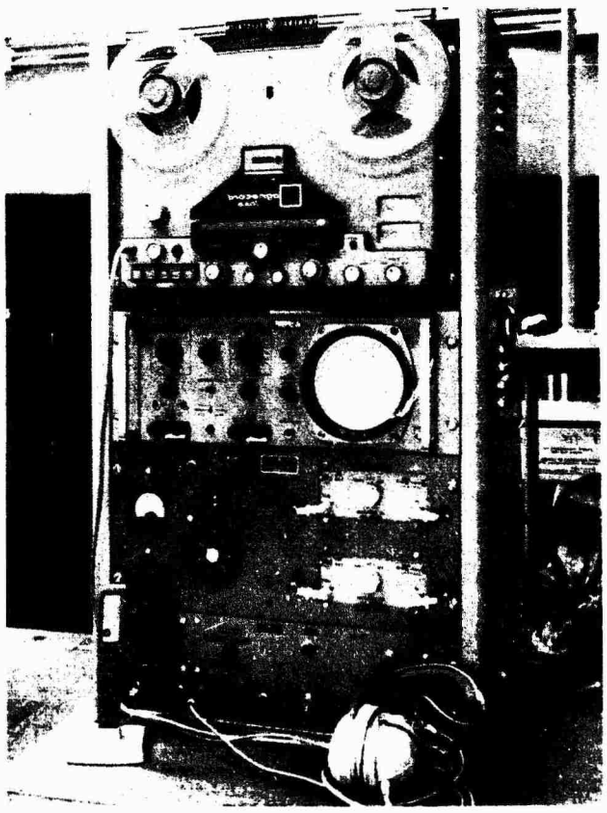

Figure 19. Data Acquisition System for Radar Antenna Bearing Analysis

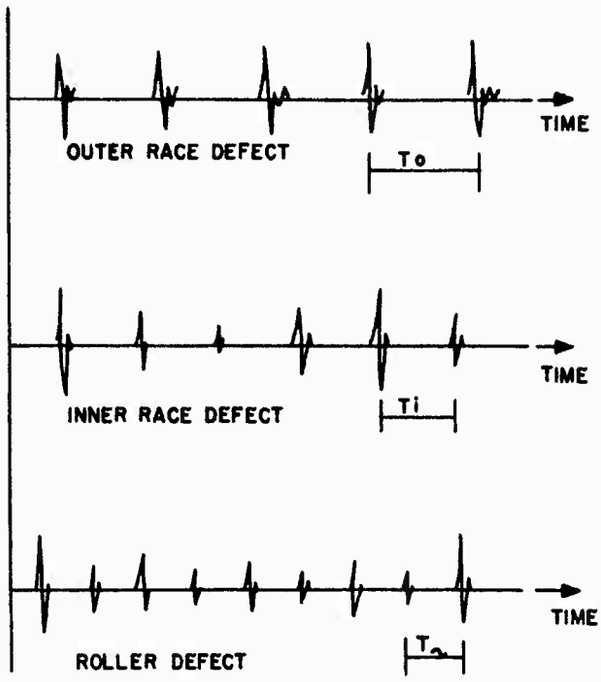

Figure 20. Bearing Malfunction Signatures

A second technique is to perform a spectral analysis. This technique provides a frequency – amplitude display. However, because of the large number of sources of vibration, such as the drive motors, gear reducers with many gears and bearings, and structural noise from the loading tower, the signals from bearing defects were not observed.

The third technique that was used was a summation analysis. The vibration signal is divided into several segments of a length which corresponds to the period of the defect impacts, T_S. The segments are then summed. The effect of this summation is an enhancement of the signal-to-noise ratio of disturbances having periodicity T_S over the signal-to-noise ratio of the raw signal. Figure 21 shows the summation technique and a block diagram of the analysis equipment. Figure 22 shows the results of a comparison of the three detection methods for detection of a small defect.

Complete details of each failure detection effort, including the spectrometric oil analysis, steel particle analysis, and the vibration analysis are given in Reference (6). However, the results of the vibration analysis will be summarized here. The first test bearing, the "X" bearing, was removed from the test assembly shortly after the test had begun and before it could fail because it was needed to replace a failed bearing at a field installation. The second bearing was successfully tested for 273 hours. Chips of bearing material had been found in the oil trough when a search was made after 195 hours of testing and the vibration analysis also showed a clear indication of bearing damage. Direct inspection of the waveform gave an indication of failure at 207 hours. However, the summation analysis gave an indication of failure at 196 hours. This method also predicted the location of the damage which was later confirmed after the bearing was disassembled. Spectral analysis did not show any indication of damage. The third bearing was tested for 1083 hours, after which the test rig was inspected and found to have developed several cracks in structural members. At that time a thorough search was also made of the oil trough, and four small pieces of bearing material were found. Since this was a definite indication of impending failure, it was decided to discontinue testing. Mechanical signature analysis did not show a conclusive indication of failure. When the bearing was

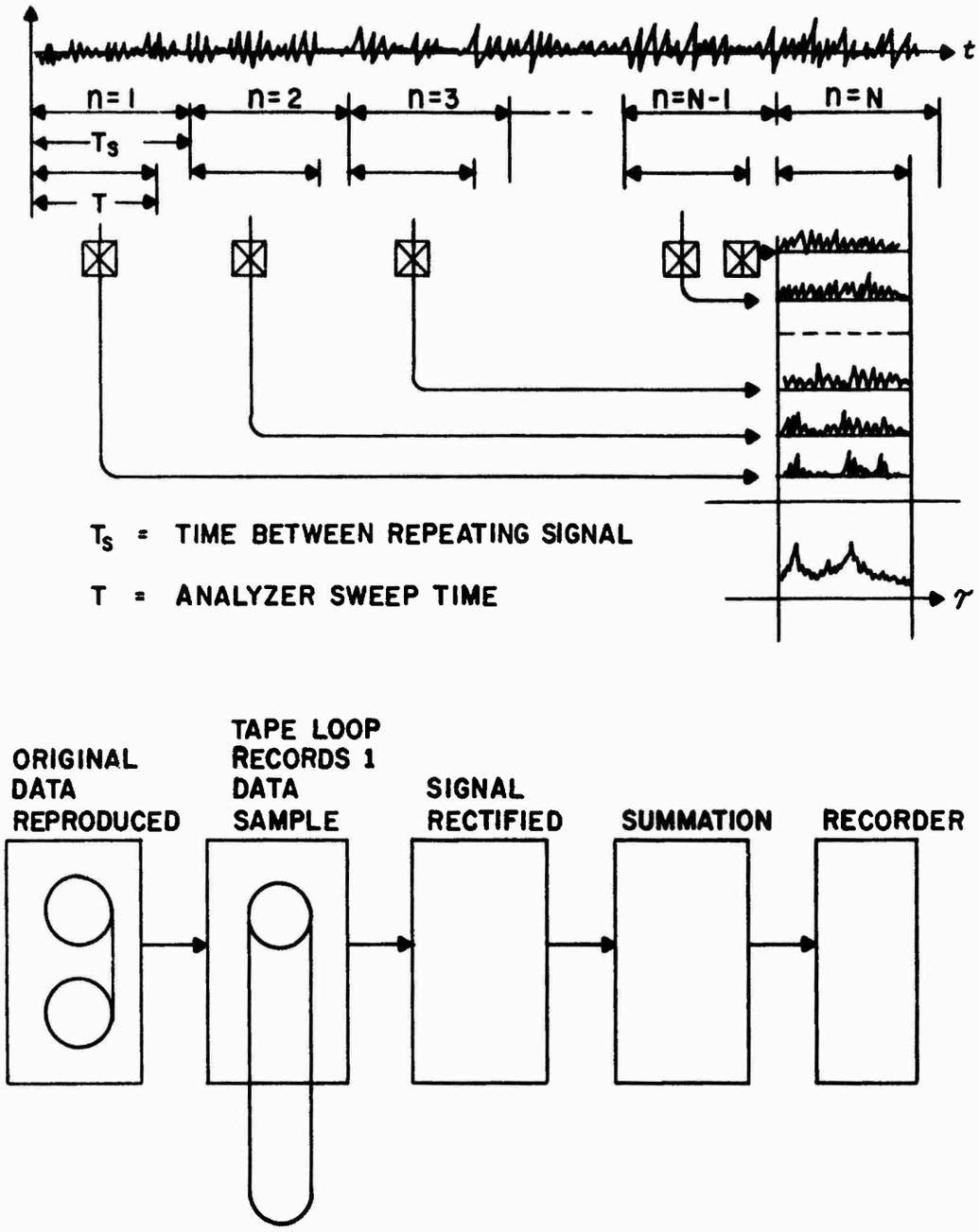

Figure 21. Summation Process

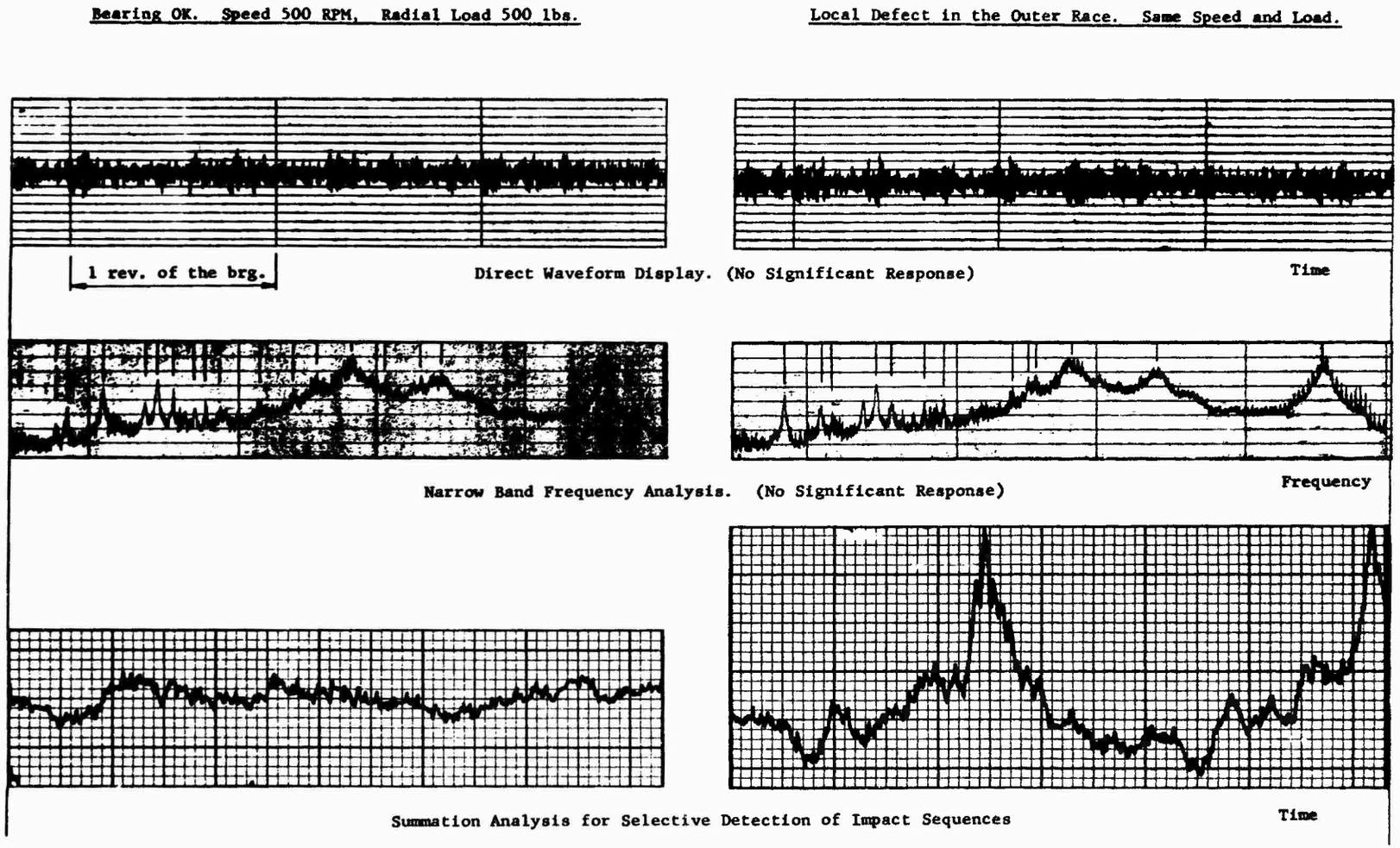

Figure 22. Comparison of Three Methods of Vibration Analysis

disassembled, it was found to have two small spalls distributed over an area approximately ¼ inch by ¼ inch on the stationary ball race. The fact that the two spalls did not generate a measurable vibration signature can probably be traced to the following reasons:

- With the external load applied, the loading structure generated so much noise that it completely masked signals from the bearing.

- When the external load was removed during the data recording, the ball load at the location of the pits is negligible and no significant signature could be generated.

3. Failure Analysis Effort

SKF Industries, King of Prussia, Pennsylvania, analyzed four AN/FPS-35 bearings. Two field failures and two test bearings were analyzed. The purpose of the contract was to determine the mode of failure for each bearing, to compare failure modes of the test bearings with those of field failures, to evaluate the test rig and test program, and to assist in interpretating the results of the test program.

Analysis of the failed bearings consisted of visual, metallurgical, and metrological inspections. Only a visual examination was made of the first test bearing, an "X" bearing. In addition to a visual examination of the second test bearing (the first two row bearing to be tested), selected components were examined in detail at SKF Industries. Measurements were made of critical dimensions. Selected ring sections were ultrasonically inspected for subsurface cracks, given a magnetic particle inspection and nital acid etched. Evaluation was also made of hardness profiles, material microcleanliness and microstructural content. Rolling elements were given the same inspections except that no ultrasonic examination was performed. Complete analyses of two field failures were also performed. The third test bearing (the second of the two two-row bearings to be tested) was not examined.

The visual examination of the first test bearing showed heavy smearing, glazing and scratching in the roller paths after only 48 hours of testing. SKF felt that the lubricant was not adequate for the test conditions. The lubricant used for the test was Houghton Cosmolubric 1133A, which is the same as used in the field. Upon their recommendation, the two combination ball-roller bearings (two-row bearings) were tested using a more viscous lubricant, Houghton Cosmolubric 1790.

The bearing manufacturer, Messinger Bearings, Inc., also inspected the first test bearing. They felt that the roller length was slightly too great for the test conditions. Accordingly, rollers for all subsequently procured AN/FPS-35 crossed roller bearings were made slightly shorter.

Analysis of the two field failures ("X" type bearings) also showed evidence of inadequate lubrication. There was evidence of grinding damage on components of all the bearings given a nital acid etch. Non-metallic inclusions were found in both field failures. Evidence also existed that a maldistribution of loads occurs because of insufficient stiffness of the bearing supporting structure.

Surface damage due to inadequate lubrication was greatly reduced in the second test bearing because of the higher viscosity lubricant. Also, there were far fewer subsurface defects in this bearing. The failure of the second test bearing was found to be the result of poor manufacturing and heat treatment practice which caused a lower than adequate hardness of the ball path of the outer race.

4. Test Program Results

The first test bearing was removed from the test rig after 48 hours. Although the bearing did not suffer any fatigue damage (spalling), it did show signs of lubrication distress and most likely would have failed quite early had testing been continued.

The second test bearing failed at 273 hours due to fatigue damage. This failure occurred well before the calculated B10 life of this bearing. However, failure analysis showed that the potential life of the bearing could not be achieved due to the poor heat treatment which gave very low hardness levels. There were two spalled areas on the outer ball race and one very small spalled area in the flame gap of the inner race. The amount of damage to this bearing is considered small in comparison to the amount of damage in most field failed bearings.

The third test bearing failed at 1,083 hours. This bearing was not given a thorough analysis; however, visual inspection showed a very small (¼" x ¼") damaged area consisting of two spalls (Figure 23). It is likely this bearing could have been operated several hundred additional hours before the damage would have been considered severe. The test results of this bearing showed it to be successful in that it achieved its calculated B10 life. "X" bearings used in field installations fail well before calculated life.

Because of the small number of test bearings, it is not possible to make statistical statements based on the test results. However, comparison of test results with field data and calculated life data can be made. The "X" bearing has a calculated B10 life of 398,005 hours under field conditions. Field experience shows that the actual B10 life is only 18,000 hours. Thus, the "X" bearing only achieves 4.5% of its calculated B10 life.

The combination ball-roller bearing has a calculated B10 life of 191,127 hours under field conditions. Note that the calculated life of the combination ball-roller bearing is less than that of the "X" bearing. Calculations of B10 life under accelerated test conditions indicated a life of 1095 hours for the two-row bearing. Therefore, the third test bearing achieved its calculated B10 life.

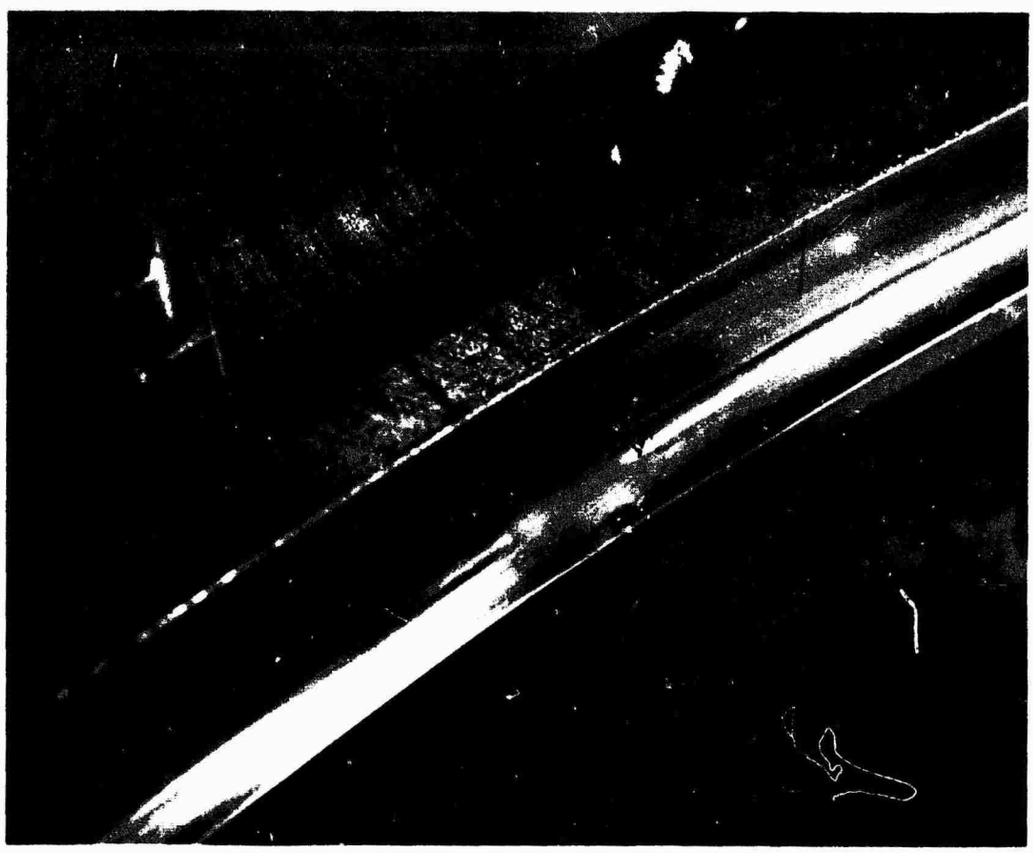

Figure 23. Outer Race of Test Bearing No. 3, Showing Fatigue Damage

Thus, from the test results it appears that the combination ball-roller bearing is capable of achieving a much greater percentage of its calculated life in this application than previous bearings. In fact it should approach its B10 life of 191,127 hours for field conditions if the higher viscosity lubricant could be used. An additional factor which indicates that the new bearing would be superior to previous bearings is that the high overturning moment that existed for the test very seldom occurs in the field. This overturning moment is taken by the ball row. It was the ball row that failed in both test bearings. The rollers and roller races did not show any signs of failure under test conditions. Under field conditions, the rollers would carry most of the operational loads.

IV. CONCLUSIONS

1. Each of the major areas of improvement attempted undoubtedly contributed to the substantial improvement in rolling element bearing life achieved.

2. Because many changes were made almost simultaneously in the field, it is not possible to quantitatively assess the effect of individual changes made prior to the accelerated life test.

3. The second two row bearing tested in the accelerated life test had a life relatively far in excess of any previous AN/FPS-35 bearing. Consequently, it is safe to conclude that the combination of bearing type and lubricant selected produced a much greater degree of improvement than the total of all other actions.

4. It can further be said that the success of the two row design which eliminates angular contact from the primary load path, tends to substantiate the speculation that lack of sufficient radial support to the bearing which is inherent in these designs was a serious limitation in achieving the design life. It is still not possible to predict the life of large bearings with the same degree of certainty as with conventional sizes. The bearing load-life model work described in Section II made possible a better understanding of factors that can vary because of size, and thus enables a designer to develop some appreciation for the degree to which a particular design may depart from the theoretically calculated life. However, the model cannot be used to develop an accurate value until many of the parameters have been evaluated for large bearings, primarily by collection of large volumes of data. Because of the comparatively small number and specialized nature of such bearings this data is not likely to become available.

5. Hydrostatic bearings can be successfully applied to large rotating antenna systems subject to all elements of extreme environments. When properly designed, they offer long life and high reliability. The friction of such bearings is practically negligible. However, their cost is high and adequate maintenance is a must.

V. RECOMMENDATIONS

1. In designing a rotating system utilizing a large rolling element bearing, all of the areas discussed in this report should be given serious consideration since they are all important to achievement of long life.

Specifically:

(a) Bearing seats should be manufactured to close tolerances, both with regard to actual dimensions, and with regard to roundness and flatness. Installation procedures should insure that these are maintained.

(b) The bearing supporting structures should be designed to be as uniformly rigid as practicable and to completely back up the bearing races both axially and radially. The importance of this cannot be overemphasized. In addition, the design should be such that the degree of rigidity is accurately determinable so that it can be included in the life calculations.

(c) It is desirable to discontinue the common practice of making the final drive gear and one race of the bearing integral with each other, for the following reasons:

- It is difficult to provide proper support to the race with the gear cut on it.
- If either component fails, both must be replaced.
- Limitations are placed on the type of heat treatment that can be used when integral construction is used.

(d) Selection of the type of rolling element bearing to be used should be based on the requirements of the application. For instance, four point contact ball bearings should not be used where radial loads are predominant because the resulting four point operation is extremely undesirable. Multiple row bearings of the general configuration tested in the accelerated life test described herein utilizing an axial thrust bearing to carry the major load should be given prime consideration because it is probable that large units will always present a problem in providing adequate radial stiffness.

(e) Steel used for rolling elements and races should be vacuum remelted at least once to insure adequate cleanliness.

(f) When size permits, through-hardening should be used. When flame hardening must be used, rigid quality control measures must be taken to insure that adequate hardness and proper micro-structure are obtained.

(g) Surface finish of rolling surfaces on balls or rollers and races should be as fine as is achievable in order to minimize the requirement for high lubricant viscosity.

(h) The internal design details of the bearing should be tailored to meet the requirements of the specific application. The following recommendations can be made based on experience in this program:

- Cages should be made up of separate segments.
- Cage design should take into account the fact that variations in ball or roller speed relative to each other will surely occur.
- Plug loading of bearings together with appropriate mount design is desirable to permit inspection or replacement of individual rolling elements.

- Bearings and mounts should be designed to permit to the greatest extent possible, ready inspection of rolling elements and rolling paths without major disassembly.

- Other details should be in accordance with best current practice in the bearing industry.

(i) The load supported by the bearing should be centered (balanced) when rotating. This is usually possible for only one rotational speed.

(j) The viscosity of the lubricant selected should be sufficient to prevent metal to metal contact between rolling elements and races under operating conditions. This may necessitate temperature control of the lubricant or the bearing and mount, or both. In any event, the design should be such as to prevent the outer race and its supporting structure from becoming colder than the inner race. Any uneven heating or cooling of parts of the supporting structure which could cause the bearing to be distorted in any way must be prevented.

(k) The lubricant used should contain anti-wear additives, viscosity index improvers, and anti-oxidants. It will probably have to operate effectively in the presence of moisture because of condensation problems. Since studies on the effects of lubrication and lubricants on rolling contact fatigue are constantly in progress, experts in this field should be contacted when any new large bearing application is contemplated.

(l) The lubrication system for the bearing should be separate from other lubrication systems required by the system. In addition to being able to provide adequate flow and positive filtration, it should contain flow interlocks to prevent bearing rotation when flow is not adequate. Provision should be made for sampling the lubricant so that it can be analyzed for the presence of wear products and other contaminants. Means should be provided for the removal of moisture from the system continuously.

(m) Incorporation of a failure detection system of the signature analysis type should be considered if, as is usually the case, it is important to detect the onset of fatigue failure in its early stages.

(n) The system should be designed to facilitate the replacement of bearings as rapidly and with as little disturbance to the rest of the system as possible. It is desirable that equipment required for this purpose be constructed and readily available when needed.

2. Hydrostatic bearings are recommended when extremely long life must be guaranteed, and when rotation at extremely low rates without "stiction" effects is required such as for astronomical tracking equipment.

REFERENCES

1. R.M. Brown, Hydrostatic Bearing System for AN/FPS-24 Radar, RADC-TR-69-429, AD# 870724, Rome Air Development Center, May 1970.

2. Y.P. Chiu, S. Borgese, J.I. McCool, T.E. Tallian, Refinement and Evaluation of Rolling Bearing Load Life Model, RADC-TR-69-264, Rome Air Development Center.

3. Proceedings, Conference on Lubrication of Large Bearing and Drive Gearing Systems, Massachusetts Institute of Technology Lincoln Laboratory, December 1959.

4. H.D. Barnhart, J.M. McGrew, E. Lange, Structural Study of AN/FPS-24 Pedestal, RADC-TR-65-247, AD# 621995, Rome Air Development Center, September 1965.

5. H.D. Barnhart, E. Lange, R.L. Mann, Dynamic Load Study of AN/FPS-24 Pedestal, RADC-TR-67-103, AD# 827939, Rome Air Development Center, July 1967.

6. B. Weichbrodt, F.V. Bowden, Instrumentation for Predicting Bearing Damage, RADC-TR-69-437, AD# 869633, Rome Air Development Center, March 1970.

APPENDIX

The following tables provide a history of all azimuth bearings operated in AN/FPS-24 and AN/FPS-35 radars.

AN/FPS-24 BEARING LIVES (HOURS)

SITE NUMBER	BEARING NUMBER 1	2	3	4	5	6
1 (1)	6341 B(3)	5603 B	2381 B	4021 B	12126 B	13727 X
2	11301 B	6605 B	24000 B	13500 X(4)		
3	11838 B	1645 B	10528 B	15313 X	22838 X	4184 X(4)
4	9051 B	15786 B	25000 X			
5	8347 B	6846 B	21500 B	16500 X(4)		
6 (2)	8148 B	5075 B				
7	7612 B	11192 B	5785 X	16835 X		
8 (2)	9918 B	13150 X(5)				
9	6960 B	7015 B	12900 X(5)	7821 H		
10	11186 B	8391 B	8998 B	18000 X	13644 X	2277 X(4)
11	3895 B	7927 B	21407 B	10300 X	12312 X	3100 X
12	8405 B	6797 B	8657 B	0 XX	34800 X(5)	

Legend –

B - Ball Bearing
X - X type Bearing
H - Hydrostatic Bearing
XX - Full Complement X Type Bearing
(1) - Prototype Site
(2) - Equipped with radome
(3) - Prototype Bearing – 3" balls
(4) - Life as of November 1970, not yet failed at that time
(5) - Taken out of service before failure

AN/FPS-35 BEARING LIVES (HOURS)

	BEARING NUMBER			
SITE NUMBER	1	2	3	4
1	17170 B	44200 X(2)		
2 (1)	45364 B(3)			
3	23000 X	25132 BB	27000 X(2)	
4	9283 B	33600 X	300 X(3)	1200 X(3)
5	9283 B	22800 X	24000 X	
6	15510 B	7296 X	14345 X	23700 X(2)
7	11200 B	37000 X		
8	22000 X(3)			
9	26317 B	21466 X	30000 X(2)	
10	32510 B	24200 X	8500 X(2)	
11	14125 B	24500 X	20500 X(2)	
12	16314 B	5416 B	17828 X	26000 X
LIFE TEST	48 X	273 BR	1083 BR	

Legend –

B - Ball Bearing
X - X Type Bearing
BB - Two Row Ball Bearing
BR - Two Row Ball – Roller Bearing
(1) - Equipped with Radome
(2) - Life as of October 1970, not yet failed at that time.
(3) - Taken out of service before failure

UNCLASSIFIED

Security Classification

DOCUMENT CONTROL DATA - R & D

(Security classification of title, body of abstract and indexing annotation must be entered when the overall report is classified)

1. ORIGINATING ACTIVITY *(Corporate author)* Rome Air Development Center Griffiss Air Force Base, New York 13440	2a. REPORT SECURITY CLASSIFICATION Unclassified 2b. GROUP N/A

3. REPORT TITLE

(6) BEARING IMPROVEMENT PROGRAM FOR LARGE ROLLING ELEMENT BEARINGS.

4. DESCRIPTIVE NOTES *(Type of report and inclusive dates)*

Technical Report - Final (in house) (9) Final rept. 1959-1969,

5. AUTHOR(S) *(First name, middle initial, last name)*

(10) Jerome P. Scheiderich
William J. Bocchi

6. REPORT DATE (11) December 1971 (12) 53p.	7a. TOTAL NO. OF PAGES 44	7b. NO. OF REFS 6
8a. CONTRACT OR GRANT NO. N/A b. ~~Job Order Number: 91420000~~ c. d.	9a. ORIGINATOR'S REPORT NUMBER(S) (14) RADC-TR-71-81 9b. OTHER REPORT NO(S) *(Any other numbers that may be assigned this report)*	

10. DISTRIBUTION STATEMENT

Distribution limited to U. S. Gov't agencies only; test and evaluation; December 1971. Other requests for this document must be referred to RADC (TSGM), GAFB, NY 13440.

11. SUPPLEMENTARY NOTES Rome Air Development Center (TSGM) Griffiss Air Force Base, New York 13440	12. SPONSORING MILITARY ACTIVITY Electronic Systems Division Air Force Systems Command L. G. Hanscom Field Bedford, Massachusetts

13. ABSTRACT

Numerous premature failures of large azimuth bearings (up to 13-1/2 feet in diameter) in the AN/FPS-24 and AN/FPS-35 radars were a major cause of concern to the Air Force because of reduced availability of the radars and the high cost of bearing replacements. An intensive program was undertaken to increase bearing life and to reduce the impact of bearing failures on system operation and maintenance. Much of the information developed by this program is applicable not only to the specific problem covered here, but to any large bearing application. The program consisted of three phases: (1) An immediate effort to determine possible means of increasing the life expectancy of four point contact balls and crossed roller bearings then in use and to improve the means of detecting failures and replacing bearings; (2) Design and fabrication of a different type (2 row ball-roller) bearing for the AN/FPS-35 radar, and accelerated life testing for rapid evaluation of its capabilities; (3) The development of a hydrostatic bearing for the AN/FPS-24 radar and the design of a similar bearing for the AN/FPS-35. As a result of phase (1) of the program, the life of AN/FPS-24 rolling element bearings has more than doubled. A lesser degree of improvement was realized on AN/FPS-35 bearings. Bearing replacement time has been reduced by a factor of 3. Phase (2) has shown the two row ball-roller bearing to be a substantial improvement over previous types, and its use in the remaining AN/FPS-35s has been recommended. Phase (3) is not covered in this report, as it is the subject of a separate report, RADC-TR-69-429 AD# 870724 dated May 1970 entitled "Hydro-static Bearing Systems for AN/FPS-24 Radar".

no.

DD FORM 1 NOV 65 1473

UNCLASSIFIED

Security Classification

m 1309 050)

UNCLASSIFIED
Security Classification

14. KEY WORDS	LINK A ROLE	LINK A WT	LINK B ROLE	LINK B WT	LINK C ROLE	LINK C WT
Bearings						
Rolling Element Bearings						
Hydrostatic Bearings						
Steerable Antennas						
Lubrication						

UNCLASSIFIED
Security Classification

DAC--Griffiss AFB NY 12 Jan 72-50