UNCLASSIFIED

AD NUMBER

AD889245

NEW LIMITATION CHANGE

TO

Approved for public release, distribution unlimited

FROM

Distribution authorized to U.S. Gov't. agencies only; Test and Evaluation; 18 NOV 1969. Other requests shall be referred to Army Material Command, ATTN: AMCRD-TV, Washington, DC 20315.

AUTHORITY

AMC ltr dtd 2 Jul 1973

THIS PAGE IS UNCLASSIFIED

AD 889245

AMC PAMPHLET AMCP 706-210

ENGINEERING DESIGN HANDBOOK

AMMUNITION SERIES

FUZES

[illegible] limited to U.S. Gov't. agencies only; [illegible] Evaluation; [illegible]. Other requests [illegible] this document must be referred to

HEADQUARTERS, U.S. ARMY MATERIEL COMMAND NOVEMBER 1969

Attn: AMCRD-TV
Wash D.C. 20315

ENGINEERING DESIGN HANDBOOKS

Listed below are the Handbooks which have been published or are currently under preparation. Handbooks with publication dates prior to 1 August 1962 were published as 20-series Ordnance Corps pamphlets. AMC Circular 310-38, 19 July 1963, redesignated those publications as 706-series AMC pamphlets (e.g., ORDP 20-138 was redesignated AMCP 706-138). All new, reprinted, or revised Handbooks are being published as 706-series AMC pamphlets.

No.	Title
100	*Design Guidance for Producibility
104	*Value Engineering
106	Elements of Armament Engineering, Part One, Sources of Energy
107	Elements of Armament Engineering, Part Two, Ballistics
108	Elements of Armament Engineering, Part Three, Weapon Systems and Components
110	Experimental Statistics, Section 1, Basic Concepts and Analysis of Measurement Data
111	Experimental Statistics, Section 2, Analysis of Enumerative and Classificatory Data
112	Experimental Statistics, Section 3, Planning and Analysis of Comparative Experiments
113	Experimental Statistics, Section 4, Special Topics
114	Experimental Statistics, Section 5, Tables
115	Basic Environmental Concepts
116	*Basic Environmental Factors
120	*Design Criteria for Environmental Control of Mobile Systems
121	Packaging and Pack Engineering
123	*Hydraulic Fluids
125	Electrical Wire and Cable
127	*Infrared Military Systems, Part One
128(S)	*Infrared Military Systems, Part Two (U)
130	Design for Air Transport and Airdrop of Materiel
134	Maintainability Guide for Design
135	Inventions, Patents, and Related Matters
136	Servomechanisms, Section 1, Theory
137	Servomechanisms, Section 2, Measurement and Signal Converters
138	Servomechanisms, Section 3, Amplification
139	Servomechanisms, Section 4, Power Elements and System Design
140	Trajectories, Differential Effects, and Data for Projectiles
145	*Dynamics of a Tracking Gimbal System
150	Interior Ballistics of Guns
160(S)	Elements of Terminal Ballistics, Part One, Kill Mechanisms and Vulnerability (U)
161(S)	Elements of Terminal Ballistics, Part Two, Collection and Analysis of Data Concerning Targets (U)
162(S-RD)	Elements of Terminal Ballistics, Part Three, Application to Missile and Space Targets (U)
165	Liquid-Filled Projectile Design
170(C)	Armor and Its Application to Vehicles (U)
175	Solid Propellants, Part One
176(C)	Solid Propellants, Part Two (U)
177	Properties of Explosives of Military Interest
178(C)	†Properties of Explosives of Military Interest, Section 2 (U)
179	Explosive Trains
180	*Principles of Explosive Behavior
185	Military Pyrotechnics, Part One, Theory and Application
186	Military Pyrotechnics, Part Two, Safety, Procedures and Glossary
187	Military Pyrotechnics, Part Three, Properties of Materials Used in Pyrotechnic Compositions
188	*Military Pyrotechnics, Part Four, Design of Ammunition for Pyrotechnic Effects
189	Military Pyrotechnics, Part Five, Bibliography
190	*Army Weapon System Analysis
195	*Development Guide for Reliability, Part One
196	*Development Guide for Reliability, Part Two
197	*Development Guide for Reliability, Part Three
198	*Development Guide for Reliability, Part Four
199	*Development Guide for Reliability, Part Five
200	*Development Guide for Reliability, Part Six
201	*Rotorcraft Engineering, Part One, Preliminary Design
202	*Rotorcraft Engineering, Part Two, Detail Design
203	*Rotorcraft Engineering, Part Three, Qualification Assurance
205	*Timing Systems and Components
210	Fuzes
211(C)	Fuzes, Proximity, Electrical, Part One (U)
212(S)	Fuzes, Proximity, Electrical, Part Two (U)
213(S)	Fuzes, Proximity, Electrical, Part Three (U)
214(S)	Fuzes, Proximity, Electrical, Part Four (U)
215(C)	Fuzes, Proximity, Electrical, Part Five (U)
235	*Hardening Weapon Systems Against RF Energy
239(S)	*Small Arms Ammunition (U)
240(C)	Grenades (U)
241(S)	*Land Mines (U)
242	Design for Control of Projectile Flight Characteristics
244	Ammunition, Section 1, Artillery Ammunition--General, with Table of Contents, Glossary and Index for Series
245(C)	Ammunition, Section 2, Design for Terminal Effects (U)
246	†Ammunition, Section 3, Design for Control of Flight Characteristics
247	Ammunition, Section 4, Design for Projection
248	†Ammunition, Section 5, Inspection Aspects of Artillery Ammunition Design
249	Ammunition, Section 6, Manufacture of Metallic Components of Artillery Ammunition
250	Guns--General
251	Muzzle Devices
252	Gun Tubes
255	Spectral Characteristics of Muzzle Flash
260	*Automatic Weapons
270	Propellant Actuated Devices
280	Design of Aerodynamically Stabilized Free Rockets
281(S-RD)	Weapon System Effectiveness (U)
282	†Propulsion and Propellants
283	Aerodynamics
284(C)	Trajectories (U)
285	Elements of Aircraft and Missile Propulsion
286	Structures
290(C)	Warheads--General (U)
291	Surface-to Air Missiles, Part One, System Integration
292	Surface-to-Air Missiles, Part Two, Weapon Control
293	Surface-to-Air Missiles, Part Three, Computers
294(S)	Surface-to-Air Missiles, Part Four, Missile Armament (U)
295(S)	Surface-to-Air Missiles, Part Five, Countermeasures (U)
296	Surface-to-Air Missiles, Part Six, Structures and Power Sources
297(S)	Surface-to-Air Missiles, Part Seven, Sample Problem (U)
327	Fire Control Systems--General
329	*Fire Control Computing Systems
331	Compensating Elements
335(S-RD)	*Nuclear Effects on Weapon Systems (U)
340	Carriages and Mounts--General
341	Cradles
342	Recoil Systems
343	Top Carriages
344	Bottom Carriages
345	Equilibrators
346	Elevating Mechanisms
347	Traversing Mechanisms
350	*Wheeled Amphibians
355	The Automotive Assembly
356	Automotive Suspensions
357	*Automotive Bodies and Hulls

* *UNDER PREPARATION--not available*
† *OBSOLETE--out of stock*

HEADQUARTERS
UNITED STATES ARMY MATERIEL COMMAND
WASHINGTON, D.C. 20315

18 November 1969

AMC PAMPHLET
No. 706-210*

ENGINEERING DESIGN HANDBOOK
FUZES

Paragraph *Page*

	LIST OF ILLUSTRATIONS	ix
	LIST OF TABLES	xiii
	LIST OF SYMBOLS	xiv
	PREFACE	xvii

PART ONE – FUNDAMENTAL PRINCIPLES

CHAPTER 1. INTRODUCTION

1-1	Definition and Purpose of a Fuze	1-1
1-2	Fuze Action	1-1
1-3	Typical Ammunition Items	1-2
1-3.1	Projectiles	1-2
1-3.2	Rockets	1-2
1-3.3	Bombs	1-3
1-3.4	Mines	1-3
1-4	Requirements	1-3
1-5	Categories	1-5
1-5.1	Impact Fuzes	1-5
1-5.2	Time Fuzes	1-6
1-5.3	Proximity Fuzes	1-6
1-5.4	Command Fuzes	1-6
1-5.5	Combination Fuzes	1-6
1-5.6	Other Fuzes	1-6
1-5.7	Self-destruction	1-6
1-5.8	Nonexplosive Fuzes	1-6
1-5.9	Model Designation	1-6
1-6	Description of a Representative Impact Fuze	1-7
	References	1-8

CHAPTER 2. GENERAL DESIGN CONSIDERATIONS

2-1	Philosophy of Design	2-1
2-1.1	General	2-1
2-1.2	Origin of a Fuze Specification	2-1
2-1.3	Design Trade-offs	2-2

*This pamphlet supersedes AMCP 706-210, 30 August 1963.

Paragraph		Page
2-2	Economics	2-2
2-3	Safety and Reliability	2-2
2-4	Standardization	2-3
2-4.1	Use of Standard Components	2-3
2-4.2	Need for Formality	2-4
2-5	Human Factors Engineering	2-5
2-5.1	Scope of Human Factors Engineering	2-5
2-5.2	Application to Fuze Design Problems	2-6
2-6	Information Sources	2-7
	References	2-7

CHAPTER 3. PRINCIPLES OF FUZE INITIATION

3-1	General	3-1
3-2	Target Sensing	3-1
3-2.1	Sensing by Contact	3-1
3-2.2	Influence Sensing	3-2
3-2.3	Presetting	3-2
3-2.4	Command	3-2
3-2.5	Combinations and Self-destruction	3-2
3-3	Mechanical Fuze Initiation	3-3
3-3.1	The Initiation Mechanism	3-3
3-3.2	Initiation by Stab	3-3
3-3.3	Initiation by Percussion	3-4
3-3.4	Initiation by Adiabatic Compression	3-4
3-3.5	Initiation by Friction	3-5
3-4	Electrical Fuze Initiation	3-5
3-4.1	The Initiation Mechanism	3-5
3-4.2	External Power Sources	3-5
3-4.3	Self-contained Power Sources	3-5
3-4.3.1	Piezoelectric Transducers	3-6
3-4.3.2	Electromagnetic Generators	3-7
3-4.3.3	Batteries	3-8
3-4.3.4	Capacitors	3-9
3-4.4	Timing Circuits	3-9
3-4.5	Initiation of the First Explosive Element	3-9
	References	3-10

CHAPTER 4. THE EXPLOSIVE TRAIN

4-1	General	4-1
4-2	Explosive Materials	4-1
4-2.1	Low Explosives	4-1
4-2.2	High Explosives	4-1
4-2.3	Characteristics of High Explosives	4-2
4-2.4	Precautions for Explosives	4-3
4-2.4.1	General Rules for Handling Explosives	4-4
4-2.4.2	Storage of Live Fuzes	4-5

Paragraph		Page
4-3	Initial Explosive Components	4-6
4-3.1	General Characteristics	4-6
4-3.1.1	Stab Initiators	4-6
4-3.1.2	Percussion Primers	4-6
4-3.1.3	Flash Detonators	4-6
4-3.1.4	Electric Initiators	4-6
4-3.1.5	Squibs	4-6
4-3.2	Input Considerations	4-8
4-3.3	Output Characteristics	4-8
4-3.4	Construction	4-9
4-4	Other Explosive Components	4-9
4-4.1	Delay Elements	4-9
4-4.1.1	Gas-producing Delay Mixtures	4-9
4-4.1.2	"Gasless" Delay Mixtures	4-9
4-4.2	Relays	4-10
4-4.3	Leads	4-10
4-4.4	Booster Charges	4-10
4-4.4.1	Explosives Used in Booster Charges	4-11
4-4.4.2	Description of Booster Charges	4-11
4-4.5	Special Explosive Elements	4-11
4-4.5.1	Actuators	4-11
4-4.5.2	Igniters (Squibs)	4-11
4-4.5.3	Fuses	4-11
4-4.5.4	Detonating Cord	4-12
4-4.5.5	Mild Detonating Fuze	4-12
4-5	Considerations in Explosive Train Design	4-12
4-5.1	General	4-12
4-5.2	Problems in Explosive Train Design	4-13
	References	4-14

PART TWO – BASIC ARMING ACTIONS

	Introduction	5-1

CHAPTER 5. ELEMENTARY PRINCIPLES OF ARMING

5-1	General	5-1
5-2	Mechanical Arming Concepts	5-1
5-3	Sequence of Fuze Ballistic Environments	5-2
5-3.1	Ballistic Equations	5-2
5-3.1.1	Acceleration	5-2
5-3.1.2	Drag	5-3
5-3.1.3	Rotational Velocity	5-3
5-3.2	Ballistic Conditions	5-3
5-3.2.1	High Acceleration	5-3
5-3.2.2	Low Acceleration	5-4
5-3.2.3	Gravity Acceleration	5-5
5-4	Environmental Energy Sources	5-5
5-4.1	Setback	5-5

Paragraph		Page
5-4.2	Creep	5-5
5-4.3	Centrifugal Force	5-6
5-4.4	Tangential Force	5-6
5-4.5	Coriolis Force	5-6
5-4.6	Torque	5-6
5-4.7	Forces of the Air Stream	5-7
5-4.8	Ambient Pressure	5-7
5-4.9	Other Forces	5-7
5-5	Nonenvironmental Energy Sources	5-8
5-5.1	Springs	5-8
5-5.2	Batteries	5-8
5-5.3	Metastable Compounds	5-8
	Reference	5-8

CHAPTER 6. MECHANICAL ARMING DEVICES

6-1	General	6-1
6-2	Springs	6-1
6-2.1	Types of Springs	6-1
6-2.2	Motion of Masses of Springs	6-1
6-2.2.1	Elementary Spring Equations	6-1
6-2.2.2	Examples of Friction	6-3
6-2.2.3	Effect of Centrifugal Force	6-4
6-2.3	Springs Used in Fuzes	6-5
6-2.3.1	Power Springs	6-5
6-2.3.2	Hairsprings	6-5
6-2.3.3	Constant-force Springs	6-5
6-3	Sliders	6-7
6-3.1	Axial Motion of Spring-driven Sliders	6-8
6-3.2	Transverse Motion of Spring-driven Sliders	6-8
6-3.3	Transverse Motion of Centrifugally Driven Sliders	6-8
6-4	Minor Mechanical Parts	6-9
6-4.1	Pins, Detents, and Links	6-9
6-4.2	Knobs, Levers, and Pivots	6-10
6-4.3	Spiral Unwinder	6-12
6-5	Rotary Devices	6-13
6-5.1	Disk Rotor	6-13
6-5.2	Centrifugal Pendulum	6-14
6-5.3	The Semple Plunger	6-15
6-5.4	Sequential Arming Segments	6-15
6-5.5	Rotary Shutter	6-17
6-5.6	Ball Cam Rotor	6-17
6-5.7	Ball Rotor	6-18
6-6	Clockworks	6-19
6-6.1	Escapement Types	6-19
6-6.2	Untuned Two-center Escapements	6-20
6-6.3	Tuned Two-center Escapements	6-21
6-6.3.1	Description of Escapement Mechanisms	6-22
6-6.3.2	Description of Tooth Design	6-23

Paragraph		Page
6-6.3.3	Description of Spring Design	6-23
6-6.4	Tuned Three-center Escapements	6-24
6-6.5	Clockwork Gears and Gear Trains	6-24
	References	6-26

CHAPTER 7. ELECTRICAL ARMING DEVICES

7-1	General	7-1
7-2	Components	7-1
7-2.1	Switches	7-1
7-2.2	Explosive Motors	7-3
7-2.3	Electronic Tubes	7-3
7-2.4	Electrical Generators	7-3
7-2.5	Reserve Batteries	7-3
7-3	RC Circuits	7-3
7-3.1	Basic RC Delay Circuits	7-4
7-3.2	Tank Capacitor RC Delay Circuit	7-4
7-3.3	Triode RC Delay Circuit	7-5
7-3.4	Three-wire RC Delay Circuit	7-5
7-3.5	Cascade RC Delay Circuit	7-6
7-3.6	Ruehlmann RC Delay Circuit	7-6
7-3.7	Two-diode Ruehlmann Circuit	7-6
7-3.8	Single-diode Ruehlmann Circuit	7-7
7-3.9	Accuracy of RC Delays	7-8
	References	7-9

CHAPTER 8. OTHER ARMING DEVICES

8-1	General	8-1
8-2	Fluid Devices	8-1
8-2.1	Fluid Flow	8-1
8-2.2	Fluerics	8-1
8-2.2.1	Fluidic and Flueric Systems	8-1
8-2.2.2	Flueric Components Used for Arming	8-1
8-2.2.3	Relaxation Oscillator	8-6
8-2.2.4	Arming Considerations	8-6
8-2.3	Pneumatic Delay	8-7
8-2.3.1	External Bleed Dashpot	8-7
8-2.3.2	Annular Orifice Dashpot	8-7
8-2.4	Delay by Fluids of High Viscosity	8-9
8-2.4.1	Silicone Grease	8-9
8-2.4.2	Pseudofluids	8-10
8-3	Chemical Arming Devices	8-10
8-4	Motion-induced Arming Devices	8-11
	References	8-12

PART THREE – FUZE DESIGN

	Introduction	9-1

Paragraph *Page*

CHAPTER 9. CONSIDERATIONS IN FUZE DESIGN

9-1	General	9-1
9-2	Requirements for a Fuze	9-1
9-2.1	Environmental Features	9-2
9-2.2	General Safety Features	9-2
9-3	Steps in Developing a Fuze	9-3
9-3.1	Preliminary Design and Layout	9-3
9-3.2	Dimensional Design and Calculations	9-3
9-3.3	Model Tests and Revisions	9-4
9-3.4	Final Acceptance, Safety, and Proving Ground Tests	9-4
9-4	Application of Fuze Design Principles	9-5
9-4.1	Requirements for the Fuze	9-5
9-4.2	Design Considerations	9-6
9-4.2.1	Booster Assembly	9-7
9-4.2.2	Detonator Assembly	9-8
9-4.2.3	Initiating Assembly	9-10
9-4.3	Tests and Revisions	9-10
9-4.4	Design Features of Current Fuzes	9-10
9-4.4.1	Examples of Current Fuze Design	9-10
9-4.4.2	Example of Rain Insensitive Design	9-12
	References	9-12

CHAPTER 10. FUZES LAUNCHED WITH HIGH ACCELERATION

10-1	General	10-1
10-2	Fuze Components for Fin-stabilized Projectiles	10-1
10-2.1	Coil Spring Design	10-1
10-2.1.1	Restraining Motion	10-1
10-2.1.2	Controlling Motion	10-2
10-2.2	Sequential Leaf Arming	10-3
10-3	Fuze Components for Spin-stabilized Projectiles	10-3
10-3.1	Sliders	10-4
10-3.2	Rotor Detents	10-5
10-3.3	Rotary Shutters	10-7
10-3.4	Special Considerations for Rocket-assisted Projectiles	10-8
10-4	Mechanical Time Fuzes	10-8
10-4.1	Clockwork Drive	10-8
10-4.2	Design of One Component	10-10
10-5	Small Arm Fuzes	10-10
	References	10-11

CHAPTER 11. FUZES LAUNCHED WITH LOW ACCELERATION

11-1	General	11-1
11-2	Rocket Fuzes	11-1
11-2.1	Historical Fuzes	11-1
11-2.2	Self-destruction	11-2
11-3	Guided Missile Fuzes	11-2

Paragraph		Page
11-4	Grenade Fuzes	11-3
11-4.1	Hand Grenades	11-3
11-4.2	Rifle Grenades	11-5
11-4.3	Launched Grenades	11-6
	References	11-7

CHAPTER 12. BOMB FUZES

12-1	General	12-1
12-1	Fuze Action	12-1
12-2.1	The Arming Process	12-1
12-2.2	The Functioning Process	12-2
12-2.3	Clustering	12-3
12-3	Impact Fuzes	12-3
12-3.1	Superquick or Short Delay Fuzes	12-3
12-3.1.1	A Typical Fuze	12-3
12-3.1.2	Gear Trains	12-3
12-3.1.3	The Explosive Train	12-5
12-3.2	Delay Fuzes	12-7
12-3.2.1	Fuze Operation	12-7
12-3.2.2	Drive Assembly	12-8
12-4	Time Fuzes	12-8
12-4.1	Operation	12-9
12-4.2	The Arming Pin	12-10
12-4.3	The Propeller	12-10
12-5	Special Fuzes	12-11
12-5.1	Bomb Clusters	12-11
12-5.2	Depth Bombs	12-11
12-5.3	Fragmentation Bombs	12-12
12-5.4	Bomblet Fuzes	12-13
	References	12-14

CHAPTER 13. STATIONARY AMMUNITION FUZES

13-1	General	13-1
13-2	Land Mines	13-1
13-2.1	Land Mine Types	13-1
13-2.2	Reversing Belleville Spring Trigger	13-1
13-2.3	Pull-release Trigger	13-2
13-3	Sea Mines	13-4
13-4	Boobytraps	13-5
	References	13-6

CHAPTER 14. DESIGN GUIDANCE

14-1	Need for Design Details	14-1
14-2	Prevention of Contact Contamination	14-1
14-3	Packaging	14-2
14-4	Linkage of Setter Components	14-2

Paragraph		Page
14-5	Materials	14-3
14-5.1	Potting Compounds	14-3
14-5.2	Sealing Materials	14-4
14-5.3	Solders	14-5
14-6	Construction Techniques	14-5
14-6.1	Mechanical Considerations	14-5
14-6.2	Encapsulation	14-6
14-6.3	Supporting Structure	14-7
14-7	Lubrication	14-7
14-8	Tolerancing	14-9
14-9	Components	14-10
14-9.1	Selection of Components	14-10
14-9.2	Electrical Components	14-10
14-9.3	Mechanical Components	14-11
14-10	Use of Analog Computer	14-11
14-11	Fault Tree Analysis	14-12
14-12	Maintenance	14-13
	References	14-13

CHAPTER 15. FUZE TESTING

15-1	General	15-1
15-2	Performance Tests	15-1
15-2.1	Development and Acceptance Tests	15-1
15-2.2	Test Programming	15-1
15-2.3	Component Tests	15-2
15-2.3.1	Explosive Elements	15-2
15-2.3.2	Mechanical Devices	15-3
15-2.3.3	Power Sources	15-5
15-2.4	Proof Tests	15-5
15-3	Safety Tests	15-6
15-3.1	Destructive Tests	15-6
15-3.2	Nondestructive Tests	15-9
15-4	Surveillance Tests	15-10
15-4.1	Factors Affecting Shelf Life	15-10
15-4.2	Accelerated Environment Tests	15-10
15-5	Military Standards and Specifications	15-13
15-6	Analysis of Data	15-13
	References	15-16

GLOSSARY	G-1
GENERAL REFERENCES	R-1
APPENDIX I. MATHEMATICS OF THE BALL ROTOR	A-I-1
APPENDIX II. JOURNAL ARTICLES OF THE JANAF FUZE COMMITTEE	A-II-1
INDEX	I-1

LIST OF ILLUSTRATIONS

Fig. No.	Title	Page
1-1	Fuze Arming Process	1-2
1-2	Typical Artillery Round	1-3
1-3	Rocket, M28, With Fuze, M404A1	1-3
1-4	Typical Bomb	1-4
1-5	Antitank Mine, M15, With Fuze, M603	1-4
1-6	Fuze, PD, M525	1-7
1-7	Arming Action for Fuze, PD, M525	1-8
2-1	Possible Multiple Fuzing Circuit	2-3
2-2	A Standard Fuze Contour	2-4
2-3	Setting Mechanism on Fuze, MT, XM571	2-6
3-1	Typical Firing Pins	3-4
3-2	Standard Firing Pin for Stab Initiators	3-4
3-3	Initiation by Adiabatic Compression	3-5
3-4	Piezoelectric Nose Element	3-6
3-5	Piezoelectric Base Element	3-7
3-6	Piezoelectric Control-Power Supply, XM22E4	3-7
3-7	Typical Circuit for Wind-driven Generator	3-8
4-1	Burning Low Explosive	4-1
4-2	Detonating High Explosive	4-2
4-3	Examples of Good and Poor Detonations	4-2
4-4	Typical Primers and Detonators (Mechanical)	4-7
4-5	Typical Primers and Detonators (Electrical)	4-7
4-6	Electric Squib, M2	4-8
4-7	Delay Element, M9	4-9
4-8	Relay, XM11	4-10
4-9	MDF Used in 37 mm Spotting Cartridge, XM415E7	4-12
5-1	Simple Arming Device	5-2
5-2	Ballistic Environments of a Fuze	5-2
5-3	Typical Pressure-travel Curve	5-3
5-4	Drag Coefficient K_D	5-3
5-5	Nomogram for Determining Spin Velocity of a Projectile	5-4
5-6	Setback Force on a Fuze Part	5-5
5-7	Creep Force on a Fuze Part	5-6
5-8	Centrifugal Force on a Fuze Part	5-6
5-9	Coriolis Force on a Fuze Part	5-6
5-10	Torque on a Fuze Part	5-7
6-1	Basic Mass and Spring System	6-2
6-2	Projection of Spring Motion	6-3
6-3	Mass and Spring Under Acceleration	6-4
6-4	Compression Spring Data	6-6
6-5	Typical Cased Power Spring	6-7
6-6	Negator Spring	6-8

LIST OF ILLUSTRATIONS (Cont'd)

Fig. No.	Title	Page
6-7	Slider at an Angle	6-9
6-8	Hinge Pin	6-10
6-9	Detent Actions	6-10
6-10	Trip Levers	6-11
6-11	Firing Ring for All-way Switch	6-11
6-12	Spiral Unwinder	6-12
6-13	Nomenclature for Spiral Unwinder	6-13
6-14	Disk Rotor	6-14
6-15	Detonator Overlap in Disk Rotor	6-14
6-16	Centrifugal Pendulum	6-15
6-17	Semple Plunger	6-15
6-18	Sequential Leaf Mechanism	6-16
6-19	Setback Acceleration Curve	6-17
6-20	Rotary Shutter	6-17
6-21	Ball Cam Rotor	6-18
6-22	Ball Rotor	6-19
6-23	Runaway Escapement	6-20
6-24	Typical Rocket Accelerations	6-20
6-25	Variation in Rocket Arming Time	6-21
6-26	Action of Junghans or Deadbeat Escapement	6-22
6-27	Popovitch Modification of Junghans Escapement	6-23
6-28	Coordinate System for Analysis of Tooth Design	6-23
6-29	Escapement Wheel Tooth Design	6-24
6-30	Detached Lever Escapement	6-25
7-1	Trembler Switch	7-1
7-2	Switch for Rotated Fuzes	7-2
7-3	Thermal Delay Arming Switch	7-2
7-4	Thermal Delay Self-destruction Switch	7-2
7-5	Explosive Motors	7-3
7-6	Basic RC Delay Circuit	7-4
7-7	Tank Capacitor RC Delay Circuit	7-5
7-8	Triode RC Delay Circuit	7-5
7-9	Three-wire RC Delay Circuit	7-5
7-10	Discharge Curve for Capacitor $C_2 (E_{b2} > E_{b1})$	7-6
7-11	Discharge Curve for Capacitor $C_2 (E_{b2} < E_{b1})$	7-6
7-12	Cascade RC Delay Circuit	7-6
7-13	Cascade RC Delay Circuit With Instantaneous Charging	7-6
7-14	Two-diode Ruehlmann Circuit	7-7
7-15	Circuit After Closure of Switch S_2	7-7
7-16	Single-diode Ruehlmann Circuit	7-7
8-1	Schematic of Flueric Amplifiers	8-2
8-2	Schematic of Flueric Pressure-compensated Oscillator	8-3
8-3	Schematic of Flueric Counter Stage	8-4
8-4	Flueric Timer	8-5
8-5	Sample Flueric Timer Elements	8-5
8-6	Flueric Relaxation Oscillator	8-6
8-7	Flueric Relaxation Oscillator and Digital Amplifier	8-7

LIST OF ILLUSTRATIONS (Cont'd)

Fig. No.	Title	Page
8-8	Fuze, XM717	8-9
8-9	Pneumatic Dashpot for Arming Delay	8-9
8-10	Delay Assembly of Fuze, XM218	8-10
8-11	Chemical Long Delay System	8-10
8-12	Electromagnetic Induction Sea Mine	8-11
9-1	Caliber Drawing of 40 mm Projectile	9-5
9-2	Ballistic Drawing for 40 mm Gun	9-6
9-3	Outline of Fuze Contour	9-7
9-4	Preliminary Space Sketch	9-7
9-5	Booster and Detonator Assemblies	9-8
9-6	Initiating Assembly	9-10
9-7	Complete Fuze Assembly	9-11
9-8	Fuze, PIBD, XM539E4	9-11
9-9	Head Assembly for Fuze, M557A1E1 (Rain Insensitive)	9-12
10-1	Fuze Head Assembly	10-1
10-2	Interlocking Pin	10-2
10-3	Leaf Arming Mechanism of Fuze, M532	10-4
10-4	Spiral Spring for Ball Rotor	10-5
10-5	Effect of Detent Length	10-6
10-6	Booster, M21A4	10-7
10-7	Timing Movement of Fuze, MTSQ, M502A1	10-9
10-8	Centrifugal Drive	10-10
10-9	20 mm Fuze, M505A3	10-11
11-1	Safing and Arming Mechanism	11-3
11-2	Safing and Arming Device, GM, M30A1	11-4
11-3	Hand Grenade Fuze, M217	11-5
11-4	Hand Grenade Fuze, M204A2	11-6
11-5	Grenade Fuze, PD, M551	11-6
12-1	Bomb Trajectories	12-2
12-2	Typical Bomb Release Curves	12-2
12-3	Fuze, Bomb Nose, M904E2	12-5
12-4	Gear Assembly of Fuze, M904E2	12-6
12-5	Explosive Train of Fuze, M904E2	12-7
12-6	Fuze, Bomb Tail, M906	12-8
12-7	Constant Speed Governor of Drive, M44	12-8
12-8	Fuze, Bomb Nose, M198	12-9
12-9	Arming Pin Assembly of Fuze, M198	12-10
12-10	Fuze, Bomb Tail, AN MARK 230	12-12
12-11	Antenna Pattern of Bomb Proximity Fuze	12-13
12-12	Doppler Principle	12-13
12-13	Typical Amplifier Response Curve	12-13
12-14	Bomb, BLU 7/B	12-13
13-1	Action of Reversing Belleville Spring	13-2
13-2	Pull-release Device	13-3

LIST OF ILLUSTRATIONS (Cont'd)

Fig. No.	Title	Page
13-3	Expansible Socket of Pull-release Device	13-3
13-4	Trip Wire Action	13-4
13-5	Pressure-release Firing Device, M5	13-5
13-6	Firing Device, M2	13-5
14-1	Packing Box and Fuze Supports	14-2
14-2	Linkage of Setter Components	14-3
14-3	Location of Seals in a Typical Electronic Fuze	14-5
14-4	Construction of Typical Mortar Fuze, M517	14-8
14-5	Catacomb Amplifier	14-8
14-6	Catacomb Amplifier With Printed End Plates	14-8
14-7	Fuze on Analog Display Board	14-12
15-1	Arrangement for Detonator Safety Test	15-3
15-2	Low-g Centrifuge	15-4
15-3	Shock Machine	15-5
15-4	Typical VHF High-g Telemetry System	15-6
15-5	Acceleration Experienced by 81 mm Mortar Projectile Dropped Base Down	15-7
15-6	40-ft Drop Tower	15-7
15-7	Jolt Machine	15-7
15-8	Jumble Machine	15-8
15-9	Results of Impact Safe Distance Test	15-9
15-10	Transportation-vibration Machine	15-10
15-11	Layout of Salt Spray (Fog) Chamber	15-11
15-12	Cooling and Heating Curves of Fuzes Subjected to the Temperature and Humidity Test	15-11
15-13	Vacuum Steam Pressure Chamber	15-12
A-1	Ball Rotor Nomenclature	A-I-1

LIST OF TABLES

Table No.	Title	Page
1-1	Fuze Categories	1-5
4-1	Impact Sensitivity of Explosives	4-3
4-2	Compatibility of Common Explosives and Metals	4-4
4-3	Physical Properties of Fuze Explosives	4-5
4-4	Common Explosive Materials	4-5
6-1	Spring Equations	6-2
6-2	Design Formulas for Constant-force Springs	6-7
7-1	Fractional Error Relations for the Ruehlmann Circuit	7-8
8-1	Comparison of Fluidics With Other Logic Techniques	8-8
9-1	Requirements and Design Data for Sample Fuze	9-6
9-2	Computations of Moments of Inertia	9-9
10-1	Summary of Conditions and Calculations	10-5
10-2	Summary of Calculations	10-8
12-1	Tactical Purposes of Bomb Fuzes	12-4
12-2	Bomb Ballistics	12-4
14-1	Comparison of Properties of Typical Potting Materials	14-4
14-2	Low-melting Soft Solders Used in Electrical Equipment	14-6
15-1	Safety and Surveillance Tests	15-2
15-2	Dimensions of Present Day Centrifuges	15-4
15-3	Typical Field Proof Tests	15-6
15-4	Volume of Gas Evolved in 40 Hours in Vacuum at 120°C	15-10
15-5	Military Standards for Fuzes	15-14

LIST OF SYMBOLS*

A = Area
A_p = Area of a part
a = Acceleration
a' = Acceleration in g's

B = Belleville spring parameter
b = Width

C = Capacitance
C = A constant
C_p = Coefficient of power derived
c = A constant
c_L = Velocity of electromagnetic waves
c_s = Velocity of sound waves

d = Mean diameter; caliber
d_i = Inner diameter
d_o = Outer diameter
d_p = Diameter of a pin
d_w = Diameter of a wire

E = Young's modulus of elasticity
E_b = Battery voltage
E_c = Voltage across a capacitor
E_e = Extinction potential of a diode
E_g = Generated voltage
E_m = Minimum operating voltage
E_s = Striking potential of a diode

F = Generalized force
F_c = Centrifugal force
F_{co} = Coriolis force
F_{cr} = Creep force
F_d = Detent force
F_D = Drag force
F_f = Form factor
F_g = Force on gear tooth
F_n = Normal force
F_r = Restraining force
F_t = Trip wire force; tangential force
f = Force of friction
f_n = Frequency of oscillation
f_r = Frequency received
f_t = Frequency transmitted

G = Torque
G' = Shear modulus of elasticity
G_f = Frictional torque
G_o = Initial spring torque
G_s = Static frictional torque
g = Acceleration due to gravity, 32.2 ft/sec^2

H = A constant
H_e = Electrical energy
H_p = Power output
H_s = Potential energy
h = Height
h = Angular momentum
h_c = Clearance between coils
h_f = Free height of a spring
h_s = Solid height of a spring

I = Moment of inertia
I_A = 2nd moment of area
I_m = Moment of inertia of escapement system
I_w = Moment of inertia of escape wheel
i = Current

J = Polar moment of inertia

K_D = Drag coefficient
K_w = Wahl factor
k = Spring constant
k' = Proportionality constant

l = Length

* Symbols that bear subscripts other than those shown here are defined in their immediate context.

LIST OF SYMBOLS* (Cont'd)

l_c = Clearance

M = Moment

M_f = Friction moment

m = Mass

m_d = Mass of a detent

m_p = Mass of a part

N = Number of active coils, turns delivered

N_w = Number of teeth on an escapement wheel

n = Twist of rifling in gun

P = Pressure

P_w = Hydrostatic pressure

p = Damping coefficient

p_d = Diametral pitch of a gear

p_h = Pitch of an unloaded helical spring

Q = A constant force

R = Resistance

R = Universal gas constant (approx. 2 cal/°C mole

R_L = Load resistance

r = Radius

r_{cg} = Radial distance to center of gravity

r_f = Final radius

r_o = Initial radius

S = Distance

S_f = Safety factor; stress factor

s = Spiral constant

T = Absolute temperature in degrees Kelvin

T_c = Time constant

t = Time

t_s = Spring thickness

u = Radial velocity

v = Velocity

v_L = Velocity of bomb radio receiver

v_o = Initial velocity (fps)

v_s = Velocity of image radio source

W = Weight

W_p = Weight of a part

w_c = Width of a clevis

w_e = Width of an eye

X = Force in the x-direction

x = Displacement

x_o = Initial displacement

Y = Force in y-direction

y = Displacement

Z = Force in z-direction

z = Displacement

Greek Letters

α = Angular acceleration

β = Compressibility

Γ = Concentration of a solution

δ Spring deflection

η = Viscosity

θ = Angular displacement

θ_o = Initial angular displacement

K = Rate of reaction

μ = General coefficient of friction

μ_k = Kinetic coefficient of friction

μ_s = Static coefficient of friction

*Symbols that bear subscripts other than those shown here are defined in their immediate context.

LIST OF SYMBOLS* (Concluded)

ρ = Density of a gas, liquid, or solid

ρ_a = Density of air

ρ_w = Density of water

σ = Bending stress

σ_{max} = Maximum stress

σ_n = Normal stress

τ = Shear stress

ν = Poisson's ratio

Φ = Magnetic flux

ϕ = Angular displacement

ϕ_o = Initial angular displacement

χ = Gear ratio

Ω = Precessional angular velocity

ω = Angular spin velocity, rad/sec

ω' = Angular spin velocity, rev/sec

ω_o = Initial angular spin velocity

*Symbols that bear subscripts other than those shown here are defined in their immediate context.

PREFACE

The Engineering Design Handbooks of the U.S. Army Materiel Command have evolved over a number of years for the purpose of making readily available basic information, technical data, and practical guides for the development of military equipment. While aimed primarily at U.S. Army materiel, the handbooks serve as authoritative references for needs of other branches of the Armed Services as well. The present handbook is one of a series on Fuzes.

This publication is the first revision of the Handbook, *Fuzes, General and Mechanical*. Extensive changes were made to update the volume. Information on explosive trains was condensed, this subject now being treated in its own publication, AMCP 706-179. Illustrations of sample ammunition items, references, and test data were brought up to date. New chapters are included on design considerations and design guidance. The treatment of electric fuze actions was greatly enlarged with material excerpted from AMCP 706-215.

This handbook presents both theoretical and practical data pertaining to fuzes. Coverage includes initiation, arming, design, and tests of fuzes and their components. Both mechanical and electric fuze actions are treated. The fuzing of all conventional ammunition items is covered.

Prepared as an aid to ammunition designers, this handbook should also be of benefit to scientists and engineers engaged in other basically related research and development programs or who have responsibility for the planning and interpretation of experiments and tests concerning the performance of ammunition or ammunition components.

The handbook was prepared by The Franklin Institute Research Laboratories, Philadelphia, Pennsylvania. It was written for the Engineering Handbook Office of Duke University, prime contractor to the Army Research Office-Durham. Its preparation was under the technical guidance and coordination of a special committee with representation from Picatinny Arsenal, Frankford Arsenal, and Edgewood Arsenal of the U.S. Army Munitions Command, and Harry Diamond Laboratories of AMC. Chairman of this committee was Mr. Wm. A. Schuster of Picatinny Arsenal.

The Handbooks are readily available to all elements of AMC, including personnel and contractors having a need and/or requirement. The Army Materiel Command policy is to release these Engineering Design Handbooks to other DOD activities and their contractors and to other Government agencies in accordance with current Army Regulation 70-31, dated 9 September 1966. Procedures for acquiring these Handbooks follow:

a. Activities within AMC and other DOD agencies should direct their requests on an official form to:

Commanding Officer
Letterkenny Army Depot
ATTN: AMXLE-ATD
Chambersburg, Pennsylvania 17201

b. Contractors who have Department of Defense contracts should submit their requests, through their contracting officer with proper justification, to the address indicated in paragraph a.

c. Government agencies other than DOD having need for the Handbooks may submit their requests directly to the Letterkenny Army Depot, as indicated in paragraph a above, or to:

Commanding General
U.S. Army Materiel Command
ATTN: AMCAD-PP
Washington, D.C. 20315

or

Director
Defense Documentation Center
ATTN: TCA
Cameron Station
Alexandria, Virginia 22314

d. Industries not having Government contracts (this includes Universities) must forward their requests to:

Commanding General
U.S. Army Materiel Command
ATTN: AMCRD-TV
Washington, D.C. 20315

e. All foreign requests must be submitted through the Washington, D.C. Embassy to:

Office of the Assistant Chief of Staff for Intelligence
ATTN: Foreign Liaison Office
Department of the Army
Washington, D.C. 20310

All requests, other than those originating within DOD, must be accompanied by a valid justification.

Comments and suggestions on this handbook are welcome and should be addressed to Army Research Office-Durham, Box CM, Duke Station, Durham, North Carolina 27706.

FUZES

PART ONE—FUNDAMENTAL PRINCIPLES

CHAPTER 1

INTRODUCTION *

1-1 DEFINITION AND PURPOSE OF A FUZE

The word *fuze* is used to describe a wide variety of devices used with munitions to provide basically the functions of (a) safing, i.e., keeping the munition safe for storing, handling, (including accidental mishandling), and launching or emplacing; (b) arming, i.e., sensing the environment(s) associated with actual use including safe separation and thereupon aligning explosive trains, closing switches and/or establishing other links to enable the munition; and (c) firing, i.e., sensing the point in space or time at which initiation is to occur and effecting such initiation. See also MIL-STD-444, *Nomenclature and Definitions in the Ammunition Area.*†

There is a very wide variety of munitions in existence and new ones are continuously being developed. They include artillery ammunition (nuclear and non-nuclear), mortar ammunition, bombs, mines, grenades, pyrotechnics, atomic demolition munitions, missile warheads (nuclear and non-nuclear), and other munition items. Because of the variety of types and the wide range of sizes, weights, yields, and intended usage, it is natural that the configuration, size, and complexity of fuzes vary also over a wide range. Fuzes extend all the way from a relatively simple device such as a grenade fuze to a highly sophisticated system or subsystem such as a radar fuze for a missile warhead. In many instances the fuze is a single physical entity—such as a grenade fuze—while in other instances two or more interconnected components placed in various locations within or even outside the munition make up the fuze or *fuzing system.* There is also a wide variety of fuze related components, such as power sources, squibs, initiators, timers, safing and arming (integrating) devices, cables, and control boxes which are sometimes developed, stocked, and issued as individual end items but which in the overall picture constitute a part of the fuzing system.

Leading nations such as the U.S.A. employ the most advanced technology available in the design of modern weapons and are constantly advancing the state-of-the-art. This is particularly true of fuzes because of their important and exacting role, constituting in effect the *brain* of the munition. This handbook in the Engineering Design Handbook Series is concerned with the basic principles underlying the design of fuzes. Since the final design of any fuze will depend upon the required role and performance and upon the ingenuity of the designer, attention in the handbook is focused on these basic principles. Illustrations of applications are purposely kept as simplified as possible, leaving the final design approaches, as they must be, to the fuze designer.

1-2 FUZE ACTION

Inherent to the understanding of fuze design is the concept of the progression of the action of the explosive train starting with initiation and progressing to the burst of the main charge in the warhead. Initiation as the word implies, starts with an input "signal," such as target sensing, impact, or other. This "signal" then must be amplified by such devices as a detonator (first stage of amplification), a lead (second stage of amplification), and a booster (third stage of amplification) which has an explosive output of sufficient force to detonate the main charge. Since the detonator contains explosives which are very sensitive as required

*This handbook was revised by Gunther Cohn, The Franklin Institute Research Laboratories. Valuable contributions were made by C. T. Davey, P. F. Mohrbach, and M. R. Smith.

†Distinct fuze terms are defined in the Glossary.

to respond to the initial (weak) signals, it is the basic role of the fuze not only to signal the presence of the target and to initiate the explosive train, but also to provide safety by casualties to property and life in the past have been directly traceable to inadequate built-in fuze safety.

As an approach to providing adequate safety, present design philosophy calls for a fuze to have at least two independent safing features, wherever possible, either of which is capable of preventing an unintended detonation; at least one of these features must provide delayed arming (safe separation). This and other aspects of safety are discussed in detail in Chapter 9. Reliability of functioning is also a primary concern of the fuze designer, details of which are covered in later chapters (e.g., par. 2-3).

Fig. 1-1 is a diagram of the steps involved in a typical arming process. At the left the fuze is represented as unarmed so that it may be stored, transported, handled, and safely launched. The arming process starts at *a* by adding energy to the system in a proper manner. At *b* enough energy has been added so that the device will continue to completion of the arming cycle. At any time between *a* and *b* the device will return to the unarmed condition if the energy is removed. After *b* the fuze is committed to continue the arming process; therefore, *b* is termed the commitment point. The detonator is aligned at *c* but provision is made for other arming functions such as switch closures all of which are finally completed at *d*, and the fuze is fully armed and ready to function.

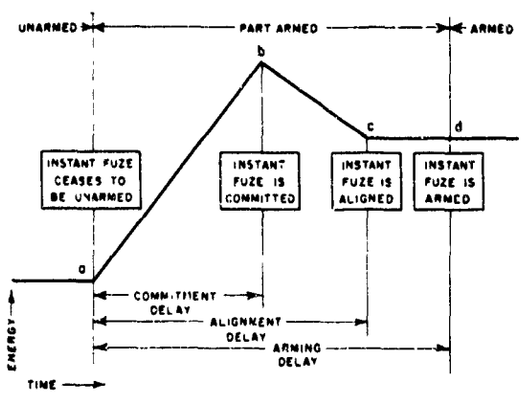

Figure 1-1. Fuze Arming Process

1-3 TYPICAL AMMUNITION ITEMS

Ammunition can carry a fuze in its nose, its base, or anywhere within depending upon its tactical purpose. To illustrate this versatility, several common fuze carriers are briefly described below. Greater detail is contained in Part Three of this handbook.

1-3.1 PROJECTILES

Fig. 1-2 shows a typical round of fixed ammunition for artillery use. The weapon firing pin (at the bottom of the figure) strikes the cartridge primer. This initiates the propelling charge with the help of the igniter. As the propellant burns, gases form that exert pressure upon the base of the projectile and force it out of the gun tube. Rifling in the gun tube engraves the rotating band thus imparting spin to stabilize the projectile. In flight, centrifugal forces, set up in the spinning projectile, turn rotor and move interrupter so that a continuous explosive train is formed. The fuze is now armed. Upon target impact, the firing pin in the fuze is pushed into the primer which then explodes and ignites the detonator. It in turn initiates the booster that amplifies the detonation sufficiently to reliably detonate the bursting charge.

1-3.2 ROCKETS

Fig. 1-3(A)[1] * illustrates Rocket, M28, with a base Fuze, M404A1 that is enlarged in Fig. 1-3(B). Rockets carry their own propellant which burns during rocket flight. After the rocket exits the launch tube, the ejection pin slides away, due to the force of a compressed spring, exposing the detonator. Upon impact, the inertia weight moves forward and causes the striker to stab the detonator, which causes the booster charge and in turn the high explosive bursting charge in the rocket head to detonate.

*Superscript numbers and letters pertain to References. Numerical References are listed at the end of each Chapter while lettered References are listed at the end of the text.

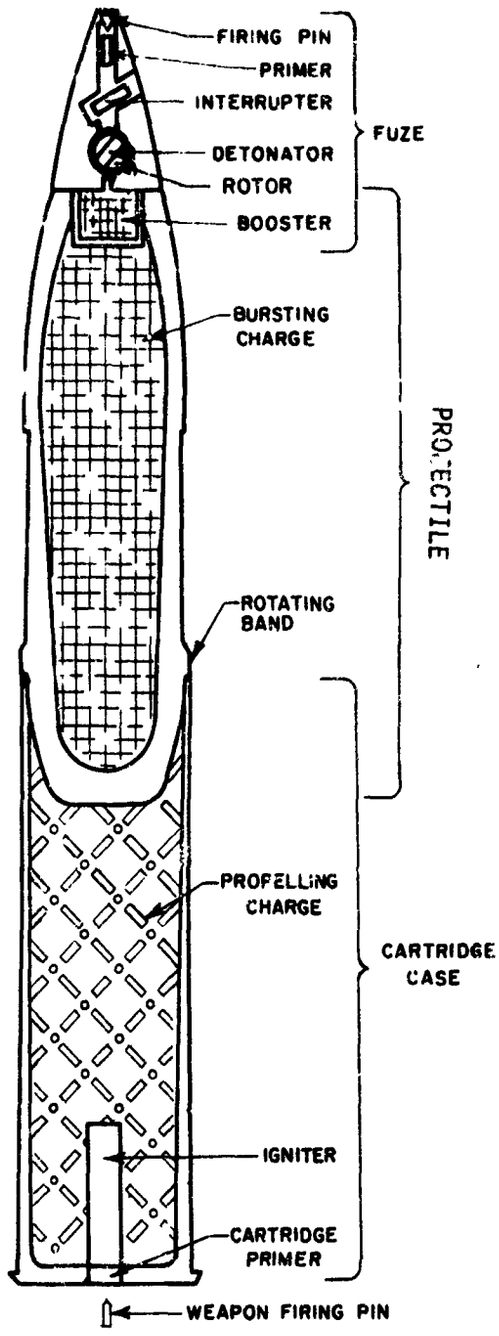

Figure 1-2. Typical Artillery Round

1-3.3 BOMBS

Fig. 1-4[2] illustrates a typical bomb with its main parts. Fins provide stability in flight. The body contains the high explosive; fuzes may be located in the nose, the tail, or the side. Two or three fuzes are used sometimes to insure explosion of the bursting charge. Bomb fuzes often are armed by vanes that spin in the air stream. The vanes are prevented from spinning before bomb release by arming wires attached to the aircraft.

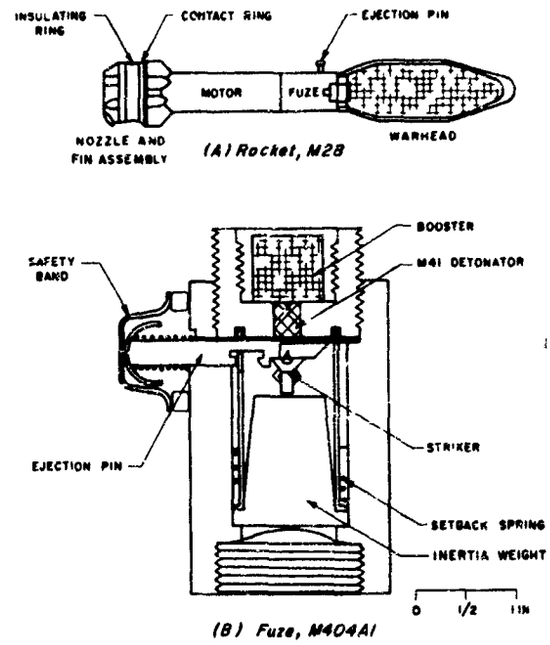

Figure 1-3. Rocket, M28, With Fuze, M404A1

1-3.4 MINES

Mines are a class of munitions which are prepositioned or emplaced at points or in areas, typically by burying, so as to deter the enemy from moving into the area. Fig. 1-5[3] shows Mine, Antitank, M15 with Fuze, M603. As a tank or other heavy vehicle rolls over the mine, it depresses the pressure plate which causes the Belleville springs to snap through, driving the firing pin into the detonator, initiating the main charge in the mine. Various antipersonnel mines operating under lighter pressure or by trip wires are also used in minefields.

1-4 REQUIREMENTS

In addition to performing the basic functions of safing, arming, and firing, fuzes having high usage rates should be designed so as to be

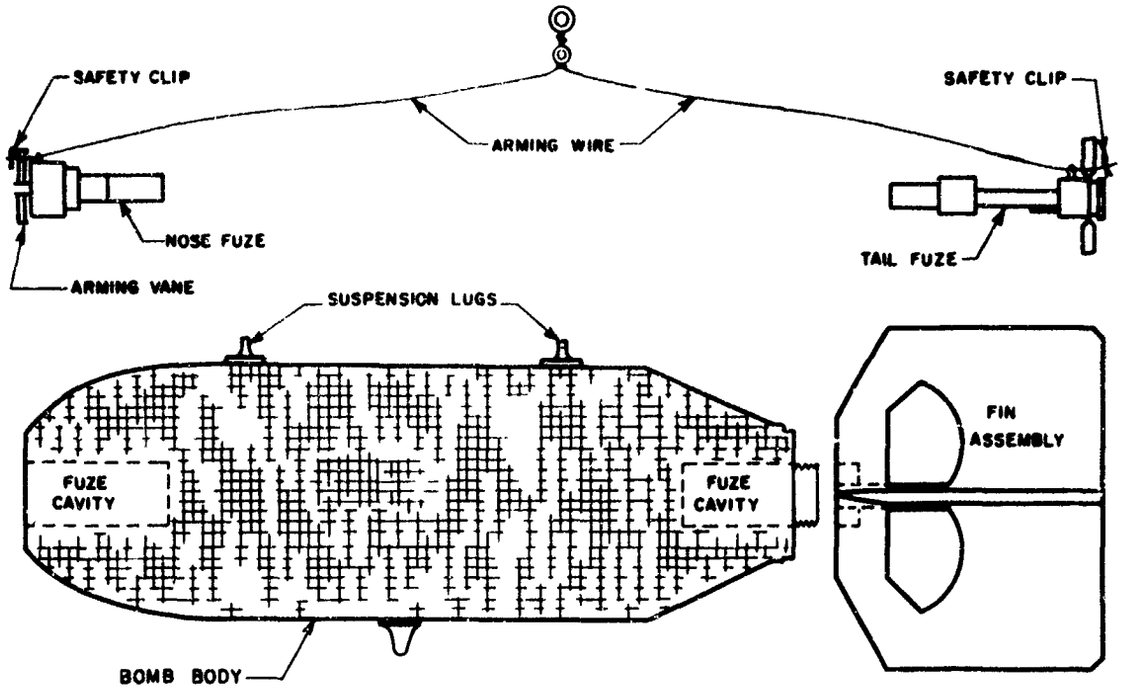

Figure 1-4. Typical Bomb

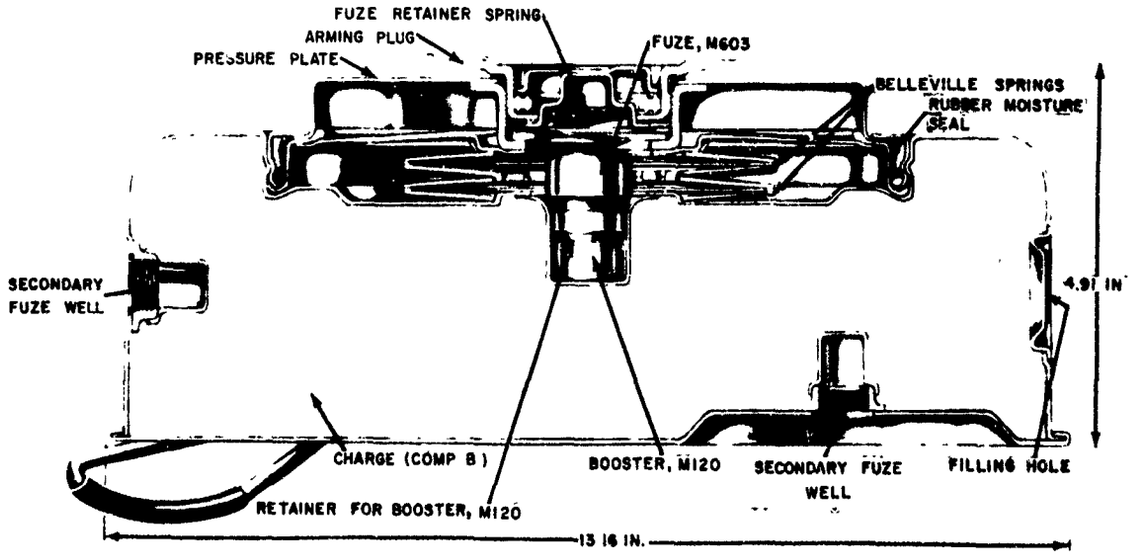

Figure 1-5. Antitank Mine, M15, With Fuze, M603

adaptable to the maximum extent possible to automated mass projection and inspection methods. This is necessary in order to minimize human errors in manufacture and assembly, and to minimize production costs.

1-5 CATEGORIES

Fuzes may be identified by their end item, such as bomb or mortar projectile; by the purpose of the ammunition, such as armor-piercing or training; by their tactical application, such as air-to-air; or by the functioning action of the fuze, such as point-detonating or mechanical time. Fuzes may also be grouped as to location, such as nose or base; as to functioning type, such as mechanical or electrical; or as to caliber. Table 1-1 lists common fuze categories. However, subtitles within groups are not mutually exclusive.

Typical nomenclature would be Fuze, Bomb Nose, M904E1. Whereas identifying features, such as MT (mechanical time) or HEAT (high explosive antitank), were formerly added to fuze nomenclature, the current trend is to minimize such descriptive terms. A more detailed description of common classifications follows.

TABLE 1-1. FUZE CATEGORIES

By End Item

- Bomb
- Grenade
- Guided Missile
- Mine
- Mortar
- Projectile
- Rocket

By Purpose

- Antipersonnel (APERS)
- Armor-Piercing (AP)
- Blast (HE)
- Chemical
- Concrete-Piercing (CP)
- High Explosive Antitank (HEAT)
- High Explosive Plastic (HEP)
- Illumination
- Signal
- Target Practice
- Training

By Tactical Application

- Air-to-Air
- Air-to-Ground
- Emplaced
- Ground-to-Air
- Ground-to-Ground

By Functioning Action

- Impact
  - Point-Detonating (PD)
  - Base-Detonating (BD)
  - Point-Initiating, Base-Detonating (PIBD)
  - Delay (short or long)
  - Graze
- Time
  - Pyrotechnic Time (PT)
  - Mechanical Time (MT)
  - Electrical Time (ET)
  - Self-Destruction (SD)
- Proximity
- Pressure
  - Hydrostatic
  - Barometric

By Location

- Base
- Internal
- Nose
- Tail

1-5.1 IMPACT FUZES

These are fuzes in which action is created within the fuze by actual contact with a target; the action includes such phenomena as impact, crush, tilt, electrical contact, etc. Among the fuzes operating by impact action (alternatively referred to as contact fuzes) are: (a) point-detonating (PD) fuzes located in the nose of the projectile, which function upon impact with the target or following impact by a timed delay, and (b) base-detonating (BD) fuzes located in the base of the projectile, which function with short delay after initial contact. The delay depends on the design and may include a delay element specifically delaying the functioning for as much as (typically) 0.25 sec. The base location is selected to protect the fuze during perforation of the target in the case of armor-piercing projectiles. In shaped charge projectiles the fuze is point-initiating, base-detonating (PIBD) where the target sensing element is in the nose of the projectile and the main part of the fuze is in the base. This base position is required in order that the explosive wave will move over the shaped charge cone in the proper direction.

Contact fuzes are conveniently divided according to response into superquick, nondelay, and delay. A superquick fuze is a nose fuze in which the sensing element causes immediate initiation of the bursting charge (typically less than 100 microseconds). To attain this, the sensing element is located in the extreme nose end of the fuze. A nondelay fuze is one in which there is no intentionally designed delay, but where there is some inherent delay because of inertial components in the fuze which initiate the explosive train. Nondelay elements may be incorporated in either PD or BD fuzes. The inertial device is used when a small degree of target penetration is acceptable or desired, and for graze action. Delay fuzes contain deliberately built-in delay elements which delay initiation of the main charge, after target impact. The elements of the fuze which bring about the delayed action are in effect "time fuze" elements (see below). Delay elements may be incorporated in either PD or BD fuzes; however for very hard targets, armor-piercing projectiles, which always have BD fuzes, are called for.

In certain fuzes, such as bomb fuzes, longer delays are frequently used. For example long

delay fuzes for bombs and underwater mines may have delay times after impact (emplacement) of from minutes to days. These fuzes usually contain antiremoval devices to discourage defuzing by the enemy.

1-5.2 TIME FUZES

These are fuzes in which action is created within the fuze at the end of an elapsed time after arming, impact, etc., as measured by mechanical, electrical, pyrotechnic, chemical, radiological, or other means. Time fuzes are used to initiate the munition at some desired time after launch, drop, or emplacement. These fuzes are generally settable at the time of use and the timing function is performed by the use of such devices as clockwork, analog or digital electronic circuitry, and chemical and pyrotechnic reactions. Time fuzes are used for projectiles primarily of the illuminating, beehive, and special purpose categories, as well as for mines, bombs, and grenades. They also have some limited uses in HE projectiles. Time fuzes range from those having set times as low as fractions of a second to as high as several hours or days. Typically a projectile fuze gives times up to 200 seconds in current designs.

1-5.3 PROXIMITY FUZES

These are fuzes in which action is created within the fuze from characteristics other than actual contact or elapsed time characteristics. Proximity fuzes (alternatively referred to as influence fuzes) initiate the munition when they sense that they are in the proximity of the target. This action is particularly effective in uses against personnel, light ground targets, aircraft, and superstructures of ships. These fuzes are the subject of separate Engineering Design Handbooks[p-t]

1-5.4 COMMAND FUZES

These are fuzes in which action is created external to the fuze and its associated munition, and deliberately communicated by the fuze by electrical, mechanical, optical, or other means involving control from a remote point.

1-5.5 COMBINATION FUZES

These are fuzes combining more than one of the above types with one as the Principal (P) action and other(s) as Secondary action(s).

1-5.6 OTHER FUZES

These are fuzes that cannot be included in the above types. Where this occurs the item should be identified, the action defined, and differences from other actions should be listed.

1-5.7 SELF-DESTRUCTION

Self-destruction (SD) is an auxiliary feature provided in the fuzes of certain munitions, primarily ground-to-air or air-to-air to explode or "clean up" the munition in case of target miss or failure of primary fuze mode. It may be accomplished by various timing mechanisms such as discussed earlier or in the case of more sophisticated munitions by command through a radio or radar link. The purpose of SD is of course to minimize damage to friendly areas.

1-5.8 NONEXPLOSIVE FUZES

Nonexplosive fuzes have specialized uses. A dummy fuze is a completely inert and more or less accurate replica of a service fuze. For ballistic purposes it may duplicate the weight, center of gravity, and contour of the service fuze. A practice or training fuze is a service fuze, modified primarily for use in training exercises. It may be completely inert (a dummy fuze), may have its booster charge replaced by a spotting charge, or may differ in other significant ways from a service fuze.

1-5.9 MODEL DESIGNATION

Army service fuzes are assigned the letter "M" followed by a number (such as M100). Modifications of "M" fuzes are given suffix numbers starting with "A" (such as M100A1).

Experimental Army fuzes have the letters "XM" preceding a numerical designation (such as XM200). When standardized, the "X" is then dropped. In a previous system, experimental

fuzes of the Army were identified by a separate "T" number which was discarded when the fuze was adopted for manufacture (such as T300). Many fuzes with "T" numbers are still in existence.

Navy service fuzes carry a "MARK" number and their modifications are followed by a "MOD" number (such as MARK 100 MOD 1). There is no uniform method for designating experimental Navy fuzes because each Agency devises its own system. However, many such fuzes carry the letter "X" as a part of their nomenclature (such as EX200). Prior to World War II, some Army service fuzes and projectiles also carried MARK numbers. Items of Army ammunition so marked may still be encountered.

1-6 DESCRIPTION OF A REPRESENTATIVE IMPACT FUZE

A typical fuze for 60 mm and 81 mm mortar ammunition is Fuze, PD, M525, as shown in Fig. 1-6[4]. The M525 is a superquick, point-detonating fuze that has been quite successful because of its relative simplicity[5]. It consists of two major parts:

(1) A head assembly that contains striker, firing pin, and a clockwork for delayed arming. The striker with conical striker spring is especially designed to permit the fuze to be fully effective when impact is at low angles.

(2) A body that contains the arming mechanism (a slider), detonator, lead, and booster pellet. Fig. 1-7 shows the body parts of the fuze in a perspective view to clarify the arming actions.

The fuze has two pull wires, connected by a cord for easy withdrawal, that remove two setback pins which lock the fuze in the unarmed position to insure safety during storage, transportation, and handling. The wire is removed just before inserting the projectile into the mortar tube.

Operation is as follows:

(1) Upon firing, acceleration of the projectile produces setback forces that cause the setback pin to move to the rear (Fig. 1-7). The safety pin is released as a result of this motion so that the spring on the safety pin pushes it outward. As long as the projectile is within the mortar tube, the pin rides on the bore. Since the slider is therefore still retained from moving, the

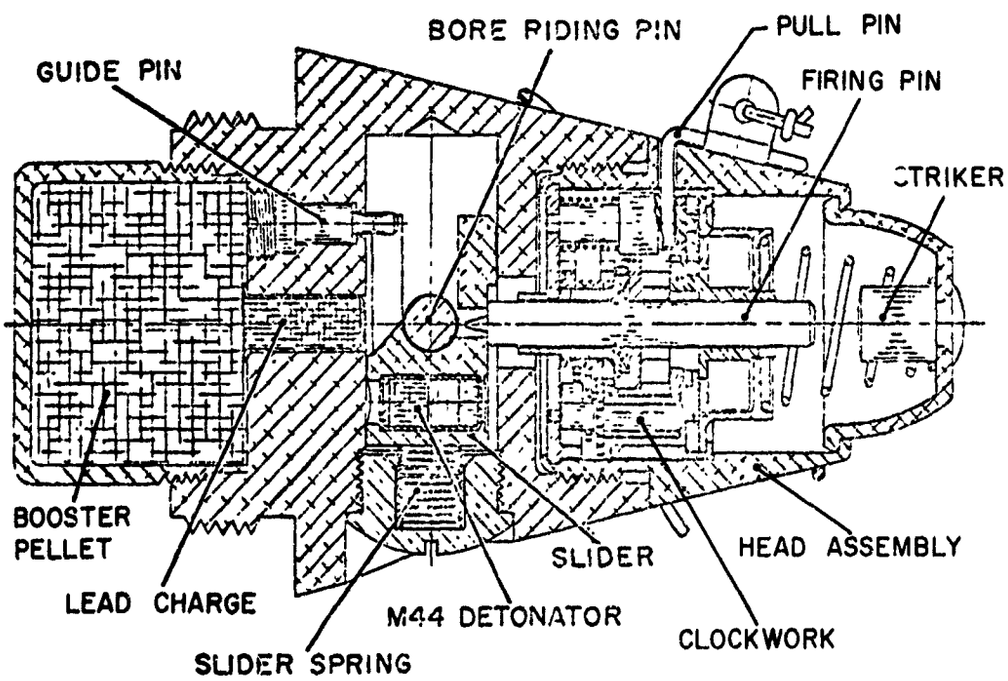

Figure 1-6. Fuze, PD, M525

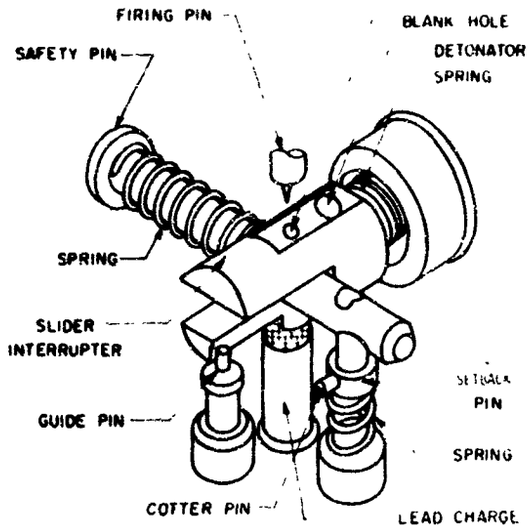

Figure 1-7. Arming Action for Fuze, PD, M525

fuze is bore safe. The pin is thrown clear of the fuze when the projectile emerges from the muzzle. The firing pin in its rearward position is in the blank hole of the slider (Fig. 1-7) so as to act as a second detent on the slider.

(2) Setback also frees the escapement pallet to start the clockwork in the head assembly. At the end of a 3-second arming delay, a spring causes forward motion of the firing pin, causing it to withdraw from the slider. The slider, then, is prevented from moving until both (a) the projectile clears the tube, and (b) the clockwork runs down.

(3) When the slider is free to move, the detonrtor in the slide is aligned with the firing pin and lead. Upon target impact, the striker pushes the firing pin into the detonator. The detonation sets off the lead and the booster.

REFERENCES

a-t Lettered references are listed at the end of this handbook.

1. TM 9-1950, *Rockets*, Dept. of Army, February 1958 (under revision as TM 9-1340-200).
2. TM 9-1325-200, *Bombs and Bomb C nponents*, Dept. of Army, April 1966.
3. TM 9-1345-200, *Land Mines*, Dept. of Army, June 1964.
4. *Fuze, PD, T336E7*, Picatinny Arsenal, Notes on Development Type Materiel 153, Dover, N. J., 10 April 1957.
5. TM 9-1300-203, *Artillery Ammunition*, Dept of Army, April 1967.

CHAPTER 2
GENERAL DESIGN CONSIDERATIONS

The fuze is an example of a complex modern device. Certainly, its design requires an engineering knowledge to handle the forces for arming and functioning in the environment within which the fuze operates. Beyond this knowledge, the designer must be familiar with the general factors that apply to fuze design. This chapter discusses these general considerations.

2-1 PHILOSOPHY OF DESIGN

2-1.1 GENERAL

Although the job of designing a fuze is not a simple one, it should not be considered overwhelming. In the following pages, the fuze characteristics of specific munitions as well as formulas are given with hints for designing the arming, functioning, and explosive components. Therein lies one of the methods for solving a complex problem: break it down into separate, workable parts. To be sure, there are many areas where precise formulas have not yet been developed and many that will never lend themselves to precise solutions. Proportioning a given space to contain the various fuze components, for example, defies exact calculations known today. In solving such problems, designers rely upon past experience and judgment or repeated testing. In some cases it may be necessary to develop new materials, processes, or methods. It is best to keep in mind all aspects of the problem, for judgment can be sound only when based on a firm grasp of all pertinent facts.

Once the fuze has been developed, it can benefit from efforts of production and value engineering. It is important that this effort be coordinated with the designer so that design characteristics are not compromised arbitrarily.

2-1.2 ORIGIN OF A FUZE SPECIFICATION

For any product, the requirement for an item is created when the customer feels the need. In the Department of Defense, the customer is the Service using the item. Everyone other than the customer is considered an outsider because his prime interest is not to use the product. However, many outsiders have made significant contributions through their vision and understanding of someone else's need.

A fuze requirement is usually originated by the Combat Arms and sent to the proper supplying agency in the Defense Department. The request pinpoints exactly what is required but is normally most vague about how it is to be accomplished. For example, a munition may be needed to inflict certain damage on an aircraft. Limiting values of environmental conditions may be stated, such as launching site and target position. There will be a date on which the item is to be available. That may be all. The supplying agency must now decide how this request can be satisfied by Government installations or industrial contractors. The length of time available will help to decide whether an existing device will be modified or whether a new device will be developed. The final product may be a guided missile, a rocket, or a projectile with an impact, time, or proximity fuze. There may be a single approach or a series of competitive designs.

When an outsider originates a new device, on the other hand, the sequence is somewhat different even though the end result may be the same. An individual person or group will express an idea for a specific device the performance of which is claimed to be or is actually known. For example, an inventor conceives a new time fuze that will operate in a certain way. In fact, the conception of ideas is one job of the fuze designer because, in a sense, fuze design is organized invention. The ideas should be communicated to the supplying agency and perhaps to the Combat Arms. If they seem to have merit, a feasibility study will be made, and if the results are favorable, a development program may be initiated. Note that a new invention has the best chance of being used when a specific need for it can be demonstrated. In fact, many new weapons have been developed on the basis of brilliant ideas.

2-1.3 DESIGN TRADE-OFFS

The fuze designer—like the designer of any other component in a weapon system—must be thoroughly familiar with the basis for the stated requirements. He then is in a position to evaluate the requirements and, if indicated, to give an intelligent proposal to relax those requirements that would be too difficult, time-consuming, or costly to achieve. The relaxing of requirements is called trade-off.

By direction, new weapon systems must provide more than marginal improvements over existing systems. The improvement may be in the areas of increased effectiveness, reliability, safety, or capability not achieved by an existing system. It could now happen, for example, that the improvements of a particular new system may be significant despite failure to accomplish all of the design objectives. This would be a valuable bit of information if a proposed trade-off is deemed desirable.

An example of this might be the development of a projectile and fuze for a new weapon. Both gun and projectile development are on schedule. During testing, it is determined that the fuze is not operable after vacuum-steam pressure tests. Suppose that existing fuzes in the field were also not capable of passing this test. The time required to redesign the fuze would delay the delivery of the new weapon into the field. In this case, it would be logical to propose that the vacuum-steam pressure requirement for the fuze be waived.

Note that MIL-STD tests are not mandatory for all applications (see par. 15-5). Being aware that fuzes off the shelf or presently in production may not meet all of the Military Standards for one reason or another, the good fuze designer judiciously reruns all of his necessary development tests even though he is using available components.

2-2 ECONOMICS

The assessment of a weapon system involves the comparison of its value with its cost. The value per round may be considered to be the product of the military value of the damage of which a round of ammunition is capable and the probability that a given round will inflict this damage. The cost of a round of ammunition includes the cost of delivering it to its target as well as that of producing it. Each of these quantities is, in itself, a complex combination of diverse factors which may include aspects of statistics, military strategy and tactics, and all branches of engineering.

The process of comparing alternative solutions to stated requirements in terms of the value received (effectiveness) for the resources expended (costs) is called the *Cost/Effectiveness* analysis. The primary ingredients of this analysis are:

(1) Objective(s)

(2) Alternative means or systems

(3) Costs or resources required for each system

(4) A mathematical or logical model, a set of relations among the objectives, alternative means, environment, and resources

(5) A set of criteria for choosing the preferred alternatives usually relating objectives and costs.

The objective is the establishment of the alternatives among which it is possible to choose. Alternatives that can achieve the objectives must be defined and cost or resource consequences must be attached to each of the alternative means.

In the course of performing the analysis, each alternative is related to the objective through a form of intellectual exercise that can be called a *model* or a *set of calculations*. Basically, a choice must be made between maximizing accomplishment of the objective for a given cost or minimizing the cost for achieving a given objective[1-3]

2-3 SAFETY AND RELIABILITY

Considerations of safety and reliability cannot be separated. The fuze must function as intended (reliability) but must not function under all but the right conditions (safety).

Reliability is a measure of the extent to which a device performs as it was designed to perform during the usually short period between launching and completion of its mission. Obviously, reliability of ammunition and of its components is of key importance. Weapons are useless if they don't function as intended.

Safety is a basic consideration throughout item life. We are concerned with the extent to which a device can possibly be made to operate

prematurely by any accidental sequence of events which may occur at any time between the start of its fabrication and its approach to the target.

Reliability is the probability that material will perform its intended function for a specified period under stated conditions[4]. It is defined in statistical terms. We say that a system has a reliability of, say, 99 percent and we make this statement with a confidence of, say, 95 percent[5].

While safety is also defined statistically, the approach to safety is somewhat different from that applied to reliability. The keystone of this approach is the fail-safe principle. Essentially, this principle states that any sequence of events other than that to which a round is subjected in normal operation shall result in failure rather than detonation of the round. Compliance with the fail-safe principle is usually accomplished mechanically, and is the reason most ordnance devices must be considered as mechanisms.

In terms of added bulk, weight, and complexity—which can be translated into terms of reliability, effectiveness, and logistics—safety is expensive. Hence, the problem of safety is a double one. The designer must be certain that his device is safe enough and yet impose the least impairment of functioning.

A number of policies, rules, and safety codes that apply to various types of materiel have been promulgated. In view of the variety of these codes, it is well for a designer to examine in advance the safety criteria that will be applicable to his design.

Note the safety requirements for fuzes in par. 9-2.2. See also the several safety tests that have been developed (par. 15-3). The design techniques that will help protect the weapon system against radio frequency energy, static electricity, and lightning are covered in a separate publication[6].

The following rules can serve for general guidance in the design of safe and reliable fuzes:

(a) Whenever possible, use standard components with established quality level and other reliability criteria at least as high as that required by the application.

(b) Wherever possible, particularly in more complex and expensive material, use multiple fuzing (see below).

(c) Specify materials for which the properties of importance to your application are well known and reproducible. Keep in mind that the average value for a parameter may be less important for design purposes than the extreme values.

(d) As far as possible, design items in such a manner that defects which affect reliability and safety can be detected by means of nondestructive tests or inspection.

Multiple fuzing refers to the combination of fuzes or their components into a network to obtain improved performance over single-fuze systems. The duplication may involve the detonator, a circuit element, the safing and arming device, or the entire fuze. Redundant components are used to improve the overall reliability of the system. For example, a multichannel fuze of 99% reliability can be built from individual fuze channels having a reliability of only 90%. Fig. 2-1 illustrates a fuze circuit having three switches so arranged that closure of any two of the three double-pole switches assures circuit continuity. The subject of multiple fuzing is covered in detail in classified handbooks[7].

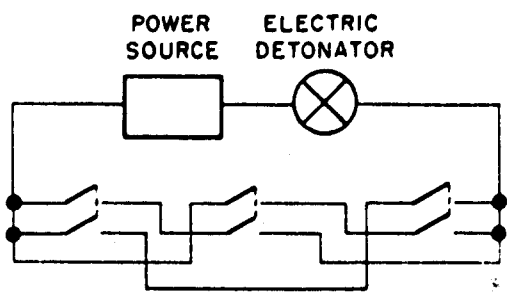

Figure 2-1. Possible Multiple Fuzing Circuit

2-4 STANDARDIZATION

2-4.1 USE OF STANDARD COMPONENTS

The decision as to whether to adapt a system design to the use of a standardized component or to design a new component especially adapted to a system is often one of the most difficult a designer has to make. On the one hand, a new item has often been developed because, in the layout stage of design, it took less effort to sketch in something that fit the dimensions than to find out what was available. On the other hand, the hard and fast resolution to use only shelf items has resulted in systems which are

appreciably inferior to the best attainable with regard to safety, reliability, effectiveness, or compactness, and in the perpetuation of obsolete items.

As a general rule, the standard item must always be given first preference and must be carefully considered. An important reason in fuze design is the cost and time required to qualify new items (see par. 2-2).

When Standards exist for the design of new items, their use is mandatory. The designer should therefore find out whether a Standard has been issued, pertaining to his assignment, before he begins to work. For example, the contour of fuzes for 2-inch holes is covered by an American-British-Canadian-Australian Standard[7]. The Standard covers fuzes having 2-12UNS-1A threads for artillery and mortar projectiles of 75 mm and larger caliber. Fig. 2-2 shows the contour required for new point-initiated artillery fuzes of Type A. Projectile cavity and fuze setting-slot dimensions are also covered in this standard.

Another standard of this type is MIL-STD-320. It lists the standardized series of dimensions for newly developed detonators, primers, and leads.

One of the reasons for standardizing fuze contours is to enable interchangeability. Maximum interchangeability is a design goal. Every fuze should be usable on as many munitions as possible so as to reduce the total number of different types of fuzes required. Savings arise in

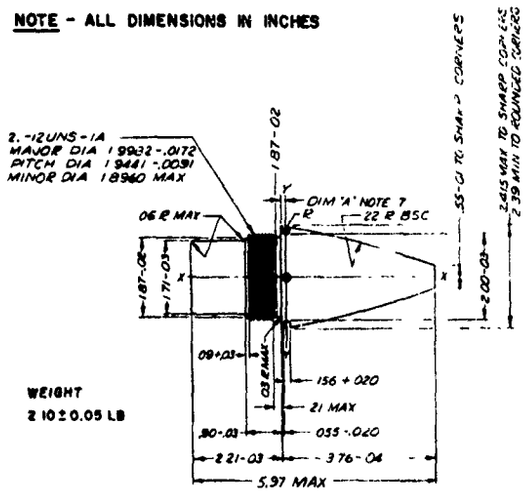

Figure 2-2. A Standard Fuze Contour

cost and effort because every fuze requires development, drawings, jigs, fixtures, inspection gages, packaging, and storage space. It is customary to make common fuzes interchangeable[8].

In some cases interchangeability may be neither possible nor desirable. It would not be economical or feasible to introduce into all fuzes certain special features that are demanded by special weapons.

Interchangeability of fuze parts has not always received the attention that it deserves. All of the advantages of multiple usage fuzes are valid for fuze parts. Usually, the manufacturer of small parts designs his parts for his machines and his know-how. Production engineers are attempting to cut down on the vast number of parts. Explosive components have largely been standardized. No doubt, many advantages will accrue when similar steps are taken for screws, nuts, nose caps, pins, detents, and other sundry parts.

2-4.2 NEED FOR FORMALITY

By necessity, standards require formality. In a small shop, the proprietor can make an offhand decision or a change to improve his product without consulting anyone and without causing any harm. However, such shortcuts are detrimental for any large private or Governmental organization. Here, it is absolutely essential that all ideas be properly documented, that all changes be recorded, and that all established methods be followed.

The fuze requirements are expressed as full instructions and detailed specifications. They come from the customer, the Combat Arms, who is not readily available for informal discussion. The customer expects a formal reply. Accepted methods of communication are progress reports and drawings. The reports should contain brief statements of the problem and the conclusions reached to date in addition to a disclosure of the progress. Reports on complicated tasks are enhanced by including an abstract, a brief history, a description of the apparatus, a discussion of the methods used, and a list of recommendations proposed. It is just as important to report failures as to report successful tests in order to close blind alleys for others. Drawings will fully describe the hardware and define the contemplated parts. Also, adherence to standards and conventions will

assure clarity and completeness.

All changes must be properly documented concerning their cause and effect because every statement in the requirements has a purpose. Requests for exemptions or modifications may certainly be made, but they should be properly handled. The designer might feel, for example, that a change in color, protrusion, or material will not affect performance. However, he may not be aware that the color he chose to vary may have been standardized as a warning of toxic gases, that the protrusion may present a packaging problem or that the particular material is critically needed elsewhere.

The problem is further intensified because people in many different locations may be working on this particular fuze. All designers must have identical and up-to-date information. A change in one lot or in one drawing, even if an improvement, could still confuse users, inspectors, and supervisors. Efficiency can be achieved only by the freest use of clear communication to avoid error and duplication of effort.

It is essential that patent disclosure be made for all new inventions[9]. A patent will not only insure recognition for the inventor and protect his interest but it will also protect the rights of the Government. Any designer who has an idea that he believes to be new, novel, or unique should write up a brief description that will identify it. A simple, freehand sketch always helps. The dated description or disclosure should then be signed by two witnesses and by the designer himself. Thereafter, a patent application will be filed and the other customary legal steps can follow if desired.

2-5 HUMAN FACTORS ENGINEERING

The term *Human Factors Engineering* has been used in recent years to characterize design activities aimed at assuring accurate, reliable, safe, and efficient use of components, tools, machines, and systems by human beings. Whenever and wherever man is the ultimate user of what we design, his capabilities and limitations must be considered in the design process. Although many aspects of Human Factors Engineering rely on the application of common sense, it is often difficult for the fuze designer to project the intended uses of his fuze, or the possible ways it will be misused because of carelessness or extreme environmental stress. Then, too, he must always consider that those who use his fuzes vary widely in ability to understand their functioning and in many physical characteristics, such as hand strength. Human Factors specialists can often play a vital role in the fuze design process by bringing to bear their specialized knowledge in human behavior in the development of Human Factors design data and in conducting Human Factors analyses of specific or competing fuze designs.

2-5.1 SCOPE OF HUMAN FACTORS ENGINEERING

Human Factors Engineering is a science insofar as it seeks to experimentally or analytically determine man's role in simple or complex man-machine systems. By understanding the nature of the system, it is possible for the designer to specify the tasks human beings will perform and their criticality to the system's effectiveness. For example, the missetting of a delay by one or two seconds may have little effect on the success of the ammunition round. A missetting of *impact* instead of *delay* may have more serious consequences. At each point of human use, it is often possible to estimate the magnitude and effect of potential human error. Understanding what humans can or cannot do—their capabilities and limitations in regard to sight, touch, strength, or intellectual ability under stress—can help us to design these man-machine "interfaces" so that error free performance is enhanced.

Human Factors specialists have, over the past 15 years, accumulated a great deal of performance data relating to areas such as vision, audition, design of controls and displays, layout of workplaces, fatigue, human strength, motivational factors, and anthropometrics (body size). Much of these data has been compiled in easy-to use reference handbooks[10-12]. These references provide design guidelines for such factors as maximum torque settings, minimum visibility requirements, and optimal letter dimensions for labels and instructional markings. More complex application of Human Factors Engineering principles, such as evaluation of frequency and magnitude of potential human errors, are best left to professional Human Factors specialists.

2-5.2 APPLICATION TO FUZE DESIGN PROBLEMS

Applying Human Factors Engineering to fuze design problems requires that the fuzing mechanism be considered both (1) as a component of a larger ammunition system, and (2) as a system unto itself. In the first instance, the Human Factors specialist must consider the entire stockpile-to-target sequence of the ammunition system and assess the impact of such factors as how and where the system will be used; under what conditions of environment (illumination, weather, etc.), by what types of troops, under what limiting conditions. As an example, ammunition designed for rapid salvo firing may preclude multipurpose fuzing because of the time frame involved, or at least, demand that multipurpose settings be made under extremely rapid conditions. This would imply that such settings require minimum applied torque and positive (visual and auditory) feedback of setting. If fuzes were armed and set at leisure, prior to mission firings, more complicated setting and arming procedures might be permissible. Human Factors studies might be in order to provide feedback data on how many fuzes could be armed or settings be changed per minute under varying conditions.

Examining fuze design as a component or system unto itself can be done in a relatively straightforward manner by considering each interaction between man and fuze. If fuzes contain visual displays (arm-safe marks, position setting marks, special instructions, etc.), reference should be made to the guidebook data for selection of optimal numeral style, size, color, etc. Choice of control modes—such as rotating bands, selector switches, or screw settings—can also be made on the basis of previous study results.

The use of mechanical time fuzes in tank-fired ammunition is a good illustration of Human Factors Engineering applied on a system and a component basis, considering not only fuze design but the overall use of the ammunition system itself. Previously, a setting wrench was used to set the mechanism that was held in position by the large torque required to move it (100 in.-oz). Because of the wide range (100 sec), each 0.1-sec setting represented a circumferential movement of only 0.007 in. Hence, a vernier scale had to be provided. This fuze, obviously, was not suitable for firing from a tank.

Fig. 2-3 shows Fuze, MT, XM571, with the setting mechanism redesigned for tank firing. The design has the following features:

(1) There is no need for time settings beyond 10 sec for tank-fired ammunition. The range of the setting was, therefore, reduced

Figure 2-3. Setting Mechanism on Fuze, MT, XM571

from 200 sec to 10 sec so that each 0.1-sec setting represents a circumferential movement of 0.07 in. This increase eliminates the need for a vernier.

(2) The setting torque was reduced so that the nose can be turned by hand. A wrench is thus no longer required. A knurl is provided on the nose to insure a good grip.

(3) The time setting is held by the release button. When the button is pushed, the nose turns freely. The button has five teeth that mate with an internal ring gear whose pitch is such that each tooth represents 0.1 sec. When the button is released, it will lock the setting at any 0.2-sec increment.

(4) To eliminate the need for firing tables, the scale is calibrated directly in meters. Lines are numbered for every 200 meters up to 4400 meters. The intermediate 100-meter settings have a tick mark. Incidentally, the scale is uneven because the increments are on a time base.

(5) The size, shape, and thickness of the numbers and the numbered lines were selected experimentally so as to be readable under the red dome light during blackout conditions.

(6) The fuze is shipped in a ready-to-use condition, requiring no setting for muzzle action. (Previously, fuzes were set to safe, thus requiring a setting before firing.)

If one remembers the trying conditions under which the user must adjust a fuze, one can understand why this amount of attention is required for so simple a device as a time-setting mechanism.

2-6 INFORMATION SOURCES

From the many publications available in both classified and unclassified literature, a basic library has been selected for the fuze designer. These general references, listed at the end of this handbook, are identified by a letter to make multiple referral easier.

Specific references used for the material discussed in this handbook are listed at the end of each chapter. Other Engineering Design Handbooks also contain information pertinent to fuzes. For a list of current titles, see the inside back cover.

REFERENCES

a-t Lettered references are listed at the end of this handbook.

1. Robert N. Grosse, *An Introduction to Cost-Effectiveness Analysis*, Research Analysis Corporation, McLean, Va., July 1965, AD-622 112.
2. J. D. McCullough, *Cost-Effectiveness: Estimating Systems Costs*, Rand Corporation, September 1965, AD-622 023.
3. AMCR 70-28, *Research and Development Systems Analysis*, Army Materiel Command Regulation, August 1966.
4. MIL-STD-721A, *Definition of Terms for Reliability Engineering*, Dept. of Defense, 2 August 1962.
5. AMCP 706-110, Engineering Design Handbook, *Experimental Statistics, Section 1, Basic Concepts and Analysis of Measurement Data.*
6. AMCP 706-235, Engineering Design Handbook, *Hardening Weapon Systems Against RF Energy.*
7. ABCA-Army-STD-101A, *Standardization of 2" Fuze Holes and Fuze Contours for Artillery Projectiles 75 mm and Larger in Caliber Including 81 mm, 4.2" and 107 mm Mortars*, American-British-Canadian-Australian Armies Standardization Program, 5 April 1966.
8. TM 9-1300-203, *Artillery Ammunition*, Dept. of Army, April 1967.
9. AMCP 706-135, Engineering Design Handbook, *Inventions, Patents, and Related Matters.*
10. Morgan, et al., *Human Engineering Guide for Equipment Designers*, McGraw-Hill Book Co., N. Y., 1964.
11. AMCP 706-134, Engineering Design Handbook, *Maintainability Guide for Design.*
12. MIL-STD-1472, *Human Engineering Design Criteria for Military Systems, Equipment and Facilities*, Dept. of Defense, 9 Feb. 1968.

CHAPTER 3
PRINCIPLES OF FUZE INITIATION

3-1 GENERAL

A fuze is a device used to cause functioning of a munition at a desired time or under specific circumstances. To accomplish this task, the fuze must become armed, determine a time interval, sense a target, or recognize some specific circumstance, and then initiate the desired action, including any delays or other specialized actions that might be required. Commonly, the desired action is to start the propagation of an explosion. These actions are divided into two main parts, arming and functioning

Arming concerns the shift in the status of a fuze from a safe condition to that in which the fuze can function. It is discussed extensively in Part Two.

Fuze functioning is the succession of normal actions from initiation of the first element to delivery of an impulse from the last element of the explosive train. First, the fuze must sense the target. When the proper target stimulus is received, the fuze mechanism is then ready to go through the steps that will lead to initiation of the first element of the explosive train. These steps differ depending on whether the fuze is mechanical or electrical.

3-2 TARGET SENSING

Different munitions are assigned specific tasks. Some are designed to detonate as they approach their targets, others are expected to detonate upon impacting the target, and still others are expected to detonate only after penetrating the target. In some cases, it is desired that the fuze provide for optional actions. Some fuzes are required to destroy the munition if no target is sensed within a given time interval or flight distance. Some items, such as mines, are expected to lie dormant for indefinite periods and then to function when a suitable target moves into their effective range. In every instance, the fuze must first sense the target at the proper time or distance so that its subsequent actions may be initiated. This problem is usually solved in one of these ways: (1) sensing by contact between munition and target, (2) influence sensing with no contact between munition and target, and (3) presetting in which the functioning delay of the fuze is set before launching or implacement.

3-2.1 SENSING BY CONTACT

Fuzes which are initiated by contact with the target are the simplest and afford the most direct solution of fuzing problems. All functioning actions start when some part of the munition touches the target. When properly designed, this system can be used to produce a detonation of the bursting charge anywhere from a short distance in front of the target to several feet within the target.

The electrical or mechanical action of such fuzes is usually activated by some mechanical action resulting from contacting the target, for example, by moving a firing pin, by closing a switch, or by stressing a piezoelectric transducer.

Contact sensing satisfies a wide range of problems and results in positive action. On the other hand, a direct hit is required. Other sensing features are needed, particularly for antiaircraft use, to function the fuze in case of near misses. Contact sensing is applied in a variety of ways.

(1) On the target surface. The most straightforward use of contact sensing occurs when it is desired to have a munition detonate on the front surface of the target. When the fuze touches the target, action starts at once and detonation occurs as a direct consequence of the sensing.

(2) Behind the target. A typical example is a munition designed to detonate within the structure of an aircraft. Methods of extending functioning time or delaying detonation of the bursting charge after first contact are discussed in par. 4-4.1.

(3) In front of target. Another example is that of detonating the bursting charge some distance in front of target. This distance in front of the target, known as the stand-off distance, permits the shaped charge of high explosive, anti

tank (HEAT) rounds to develop a characteristic jet that is particularly effective in defeating armor. Extremely rapid fuze action (20 μ sec) is required to achieve the proper stand-off distance. This can be achieved as follows: a piezoelectric transducer is placed in the nose that will initiate an electric detonator in the base, or an explosive element is placed in the nose with provisions for its detonation products to be "spit back" through a tube in the base. The second process is used for slow rounds (1500 fps or less) and when the spit distance is short (30 mm weapons).

3-2.2 INFLUENCE SENSING

This type of fuzing results in detonation of the bursting charge in the vicinity of the target. Such sensing is useful in a number of tactical situations: to rain fragments on ground troops from the air or to fill the air around an aircraft with fragments. Since a direct hit is not necessary, the net effect is that of an enlarged target. The leading example of this type of influence sensing is the proximity fuze of the radio type. Originally, such fuzes were called "VT" but the term proximity is now preferred.

A simple proximity fuze of the radio type contains a continuous-wave transmitter, an antenna, and a receiver. When the emitted waves strike a target, some of the energy is reflected back to the antenna. Because of the relative motion between fuze and target, the reflected-wave frequency differs from the original emitted frequency and the difference frequency (known as the Doppler or beat-note frequency) is generated in the antenna and amplified in the receiver. When the signal reaches a certain value, an electric detonator is initiated that in turn functions the explosive train.

Proximity fuzes are the subject of other Engineering Design Handbooks[p,t]. Some further discussion is given in par. 12-5.3.

Refinements of influence sensing become especially important for surface-to-air guided missiles. The missile must sense the target both to follow it and to initiate the fuze action. Several methods are in use to do this: detectors sense the target's heat or noise, transmitted radio waves sense the location of the target, or independent commands may artificially cause target sensing. When operating properly, the missile guidance system compensates for changes in target position. Once the missile has come into target range, it will then sense the target's exact position by another means to initiate fuze action.

3-2.3 PRESETTING

The third type of sensing is achieved by a time fuze. Time is estimated and preset before firing or launching the ammunition. Time fuzed ammunition may be designed to function: (1) against moving targets, (2) some distance from a fired target or above ground, or (3) at the target during subsequent events.

A range of a few seconds to two minutes is common for time fuzes fired to explode against moving targets or near targets. The decision as to when the fuze shall function is based on information regarding wind velocity, target range, position of the target when the missile is due to reach it, and other pertinent details. On this basis, the fuze is set to detonate at the estimated most effective time after launching, and the interval of time is measured during flight by appropriate means, usually a clockwork mechanism or an electric timing circuit carried in the fuze.

Time fuzed ammunition may also be dropped or placed at a target and then required to function a long time (several days) after arrival. Such action would, for example, permit friendly troops to leave the area. These long intervals are achieved by means of clockworks or chemical delays.

3-2.4 COMMAND

Command fuzes initiate their munition on impulses received after launching. This is usually done by triggering the fuze with a radio signal when observation indicates that the fuze should function. This point can be determined and the command sent automatically by use of radar and other electronic equipment.

3-2.5 COMBINATIONS AND SELF-DESTRUCTION

It is often desired that a fuze be able to sense the target in more than one way so as to increase its effectiveness. It is possible, for example, that a time fuze, set incorrectly, might

pass through a light target and then function far out of range when the time runs out. On the other hand, a fuze equipped to both contact-sense the target and to be preset would function when hitting a target before the predetermined time setting. In addition, the versatility of a fuze is increased when it has more than one way of sensing the target. A fuze may be built so that the operator may preselect the action(s) desired. While the impact-time combination mentioned above is the most common, other combinations are also used when needed.

An action often combined with contact sensing fuzes is self-destruction. In the sense that a fuze is informed in advance when to self-destroy, this action compares to presetting. It differs, however, in that no target is expected at that point. This feature is used most often in fuzes that are fired at aircraft so that they will function before hitting friendly territory if they miss their target. Self-destruction is accomplished when the fuze senses that a certain amount of time has elapsed or that some change in environment has occurred. This may be achieved directly by a timer, or indirectly by spin decay or by change in acceleration.

3-3 MECHANICAL FUZE INITIATION

3-3.1 THE INITIATION MECHANISM

Once the fuze receives information that it should start target action, a number of complex mechanisms may start to operate. The necessary power to operate the fuze must be made immediately available. This power must then activate any time delays or other necessary devices prior to initiation of the first element of the explosive train.

In a mechanical fuze, contact sensing (impact) or presetting (time) is converted directly into mechanical movement of a firing pin which in turn is driven either into or against the first element of the explosive train. This is a simple and straightforward process. Functioning delays are usually obtained by pyrotechnic delays which are an intimate part of the explosive train (see par. 4-4.1).

A mechanical fuze is simple to produce, reasonably foolproof in operation, and often requires only inexpensive materials. However, such a fuze is inherently slow in operation when compared to actions taking place in the order of microseconds, and it is not easily adaptable to remote sensing.

For initiation then, it is necessary to obtain relative motion between firing pin and primer. For the simplest solution, the forces on munition impact are used to crush its nose, thereby forcing the pin into the primer. In a base fuze, the pin or primer may float in a guide through which it moves when relative changes in momentum occur. Springs are also used to provide relative motion between pin and primer, especially in time fuzes where inertial forces of impact are not available.

Firing pins for stab initiation are different from those for percussion initiation as explained in the paragraphs which follow. Typical firing pins are shown in Fig. 3-1. Initiation by adiabatic compression, on the other hand, does not require a firing pin at all.

3-3.2 INITIATION BY STAB

If the pin punctures the primer case and enters a suitable explosive charge, an explosion can be produced. This is referred to as stab initiation. The point of the stab firing pin commonly used in United States fuzes is constructed in the shape of the frustum of a right circular cone[c]. A firing pin with a point in the shape of a pyramid seems to improve sensitivity, but is more difficult to manufacture. The criteria below have been developed for the design of stab firing pins. They are illustrated in Fig. 3-2.

(1) Flat Diameter. Variations in this diameter have shown little effect on energy input required for initiation below a diameter of 0.015 in. for stab initiated items of currently prevalent design. For larger diameters, the energy input requirements increase at a much higher rate.

(2) Included Angle. As this angle is decreased, the apparent primer sensitivity is increased. However, some compromise must be reached; for, the smaller is the angle, the weaker is the firing pin. The angle should be held under 26° where practical because above this value the required energy input increases rapidly.

(3) Corner Radius. A sharp corner is desirable but a small radius is permissible. A radius

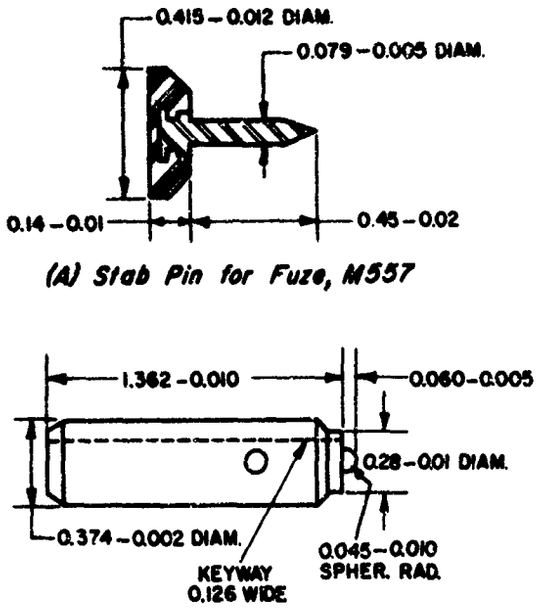

(A) Stab Pin for Fuze, M557

(B) Percussion Pin for Bomb Fuze, M904, to Initiate M9 Delay Element

NOTE:– ALL DIMENSIONS IN INCHES

Figure 3-1. Typical Firing Pins

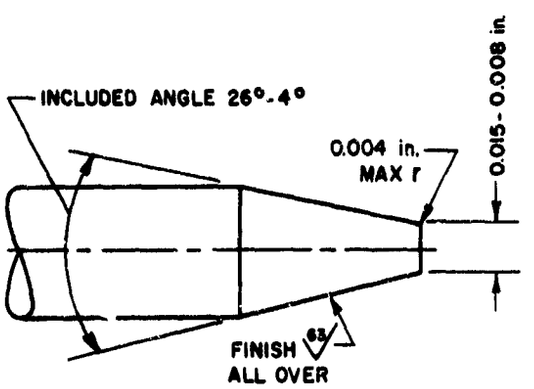

Figure 3-2. Standard Firing Pin for Stab Initiators

of 0.004 in. is specified for the stab pin of Fuze, M557 (Fig. 3-1).

(4) Material. Both steel and aluminum alloys are in common use as firing pin materials. Tests indicate a slight sensitivity advantage for steel, but the difference is not sufficient to rule out aluminum alloys or even other metals.

(5) Other Criteria. The rear end of the pin may be shaped in any way convenient for assembly. Two configurations are shown in Fig. 3-1.

The firing pin alignment with the primer and the surface finish of the pin will affect the sensitivity of a stab initiator. Other considerations of importance pertain directly to the primer and are discussed in par. 4-3. Generally, the primer specifications indicate the details of a firing pin and holder. A typical stab detonator is shown in Fig. 4-4(A).

3-3.3 INITIATION BY PERCUSSION

Contrary to initiation by stab, the firing pin does not puncture the case in percussion initiation. This difference in action is due to primer construction. In a percussion primer, the explosive is backed up by a metal anvil. The firing pin dents the case and pinches the explosive between case and anvil. The minimum energy of the firing pin is, therefore, a function of the explosive, its container, and the supporting structure. Energy must be applied at a rate sufficient to fracture the granular structure of the explosive. Incidentally, percussion primers are constructed in this manner to seal the gases. Percussion primers are discussed more fully in par. 4-3. Typical primers are shown in Fig. 4-4(B) and (C).

Criteria for percussion firing pins have not as yet been refined to the same degree as those for stab pins. However, studies have been made of the effect of firing pin contour on the sensitivity of specific primers. It was found that a hemispherical tip gives greater sensitivity than a flat tip and that there is little effect on primer sensitivity as a result of changing tip radius. A full investigation of the sensitivity relationship with respect to cup, anvil, charge, and pin has indicated that sensitivity variations appear to originate in the nature of primer cup collapse rather than in the detonation phenomenon itself[c].

A study of the effect of firing pin alignment on primer sensitivity indicates that there is little effect if the eccentricity is less than 0.02 in. Above this eccentricity, sensitivity decreases rapidly because of primer construction. Sensitivity also decreases as the rigidity of the primer mounting is decreased.

3-3.4 INITIATION BY ADIABATIC COMPRESSION

A very simple impact fuze that does not contain a firing pin is one that is initiated by a process called adiabatic compression. Fig. 3-3 illustrates a small caliber fuze of this type. The

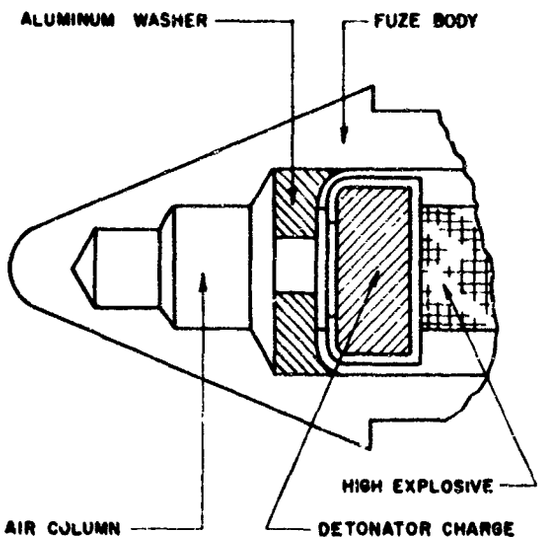

Figure 3-3. Initiation by Adiabatic Compression

explosive charge can be considered to be initiated by the temperature rise resulting from the rapid compression of the air column upon target impact. It is also possible for fragments of the nose of the fuze body to cause initiation. While this fuze is easy to manufacture, it is neither as sensitive nor as reliable at low velocities or for thin targets as firing pin fuzes.

3-3.5 INITIATION BY FRICTION

The heat generated by friction is sufficiently high to initiate an explosive reaction. Friction can be generated in various ways, such as by rubbing two surfaces together. An example of friction initiation is Firing Device, M2 (Fig. 13-6), wherein a wire coated with a friction composition is pulled through an ignition mix. Because the heating time cannot be closely controlled, friction initiation is used only in firing devices, not in fuzes.

3-4 ELECTRICAL FUZE INITIATION

3-4.1 THE INITIATION MECHANISM

Why should the designer use an electric fuze? First, the electric fuze can operate within a few microseconds after target sensing. Second, the electric fuze can be initiated from remote places; for example, in a point-initiating, base-detonating (PIBD) fuze, sensing occurs in the nose while detonation proceeds from the base of the missile. Third, electric fuzes provide the potential for accurate time control for time fuzes and for functioning delays, both of which have not yet been fully realized. Fourth, the use of electric power sources and electric initiation affords increased versatility and possibly less complexity in achieving fuze safety.

The first step in the initiation of electric fuzes is generally achieved mechanically. It consists in connecting the power source (1) by using the force of impact, (2) by electrical signals received from the target, or (3) by command to the electric circuit. The second step consists of activating any timing circuits which lie between the power source and the first element of the explosive train. This action culminates in the initiation of the first element of the train at the desired time and place.

More complex, then, than the initiation of mechanical fuzes, initiation of electric fuzes involves power sources, other electric components, circuitry, and electrical initiation of the first explosive element. Electric fuzes are either externally powered or self-powered, each arrangement having certain advantages. See also Chapter 7 on electric arming. Additional details on power sources are covered in other Handbooks[8,9].

3-4.2 EXTERNAL POWER SOURCES

The amount of electrical energy that can be supplied from an external source is large enough to ease the restrictions that must normally be placed on timing circuits and detonator sensitivity. For munitions launched from airplanes or fired from ships, external power is readily obtained. When a fuze is used in the field, on the other hand, an external power supply may not be available.

3-4.3 SELF-CONTAINED POWER SOURCES

The minimum energy required of a self-contained power source is that needed to fire a detonator. In addition, it may be required to operate vacuum tubes or transistors. The source must also meet the necessary military requirements for temperature, ruggedness, and aging characteristics. The problems become difficult because of the small amount of available space for a power source in a fuze.

Piezoelectric transducers and electromagnetic generators are possibilities for converting the abundant mechanical energy available in a missile or projectile into sufficient electrical energy. Various forms of batteries that convert chemical or atomic energy into electrical energy have also proven successful. In addition, a precharged condenser makes a satisfactory power source.

3-4.3.1 Piezoelectric Transducers

When a piezoelectric element is stressed mechanically, a potential difference will exist across the element which will cause a charge to flow in the circuit. One common method of manufacturing such transducers is to form a polycrystalline piezoelectric material into a ceramic. These ceramics can be formed into any desired shape, such as a disk. For actual use in a circuit, the faces of the ceramic body are usually silver-coated to form electrodes. In general, the voltage across such an element is proportional to the product of stress and element thickness while the charge per unit area produced is proportional to the applied stress. The voltage is developed immediately when the element is stressed.

A straightforward use of a piezoelectric transducer is to place it in the nose of a projectile. On impact, the element will be stressed and a voltage pulse will be supplied directly to an electric initiator. The element must be designed to provide the proper voltage. A word of caution—it is possible to generate high voltage (10,000 volts) upon target impact, which will break down the electrical insulation thereby grounding out the initiating pulse.

Piezoelectric elements are stressed on impact. The signal is transmitted at once in those applications where it is desired to function the fuze a very short time after impact. In HEAT projectiles, for example, the main explosive charge must be detonated before appreciable loss of stand-off results from crushing of the ogive or before deflection occurs from the target at high angles of obliquity. This necessitates a fuze function time of 200 μ sec or less after impact[1,2].

These elements have also been used in applications where delay after impact is specified. To accomplish this, the energy pulse generated by the element at impact can be applied to the detonator through a delay network. Another possible solution is to stress the element on firing to charge a capacitor. At impact, an impact switch or other device can discharge the capacitor through the detonator to cause detonation. Delay time will be a function of the RC time constant of the circuit.

Piezoelectric elements are usually mounted in either the nose or the base of a projectile. Fig. 3-4 shows a nose-mounted configuration. Electrical connections are brought out from the faces of the disk. One side of the disk is grounded and the other side is connected to the fuze base element by an insulated wire that passes through the high explosive. To eliminate the wire connection, it is sometimes possible to use parts of the fuze as an electrical connection between the nose-mounted element and the detonator. Any parts used for this purpose must be adequately insulated from the fuze housing.

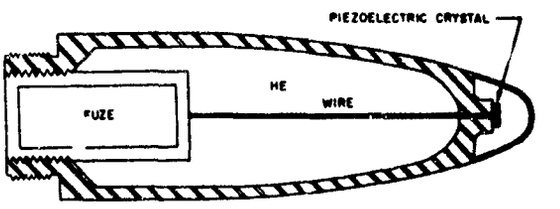

Figure 3-4. Piezoelectric Nose Element

A somewhat simpler arrangement, in which the element is mounted in the base of a round, is shown in Fig. 3-5. This arrangement also eliminates the connecting wire and results in a self-contained base fuze. Mounting the element in the base, however, requires that it be stressed by the impact shock wave transmitted to the base along the walls of the projectile.

In some applications, the complete fuze, including the piezoelectric element, is mounted in the nose of a round. As in the case of the base-mounted element, this results in a self-contained fuze. Care must be taken to prevent the fuze from being damaged at impact, particularly in applications where a delay-after-impact feature is incorporated.

Quite often, better performance can be obtained by using two or more elements connected in electrical parallel rather than a single element.

To reduce the possibility of premature fuze function, a bleeder resistor is normally connected across the piezoelectric element to dissipate any electrical charge that it might accumulate during storage or as a result of stress induced by setback or spin. The value of the bleeder resistor must be high enough to insure that most

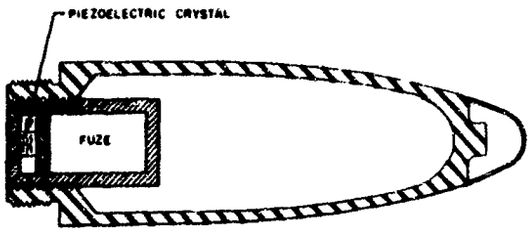

Figure 3-5. Piezoelectric Base Element

of the energy delivered by the element is dissipated in the detonator. Some protection against prematures as well as decreased sensitivity to light targets (such as 1/8-in. fir plywood) may be obtained by the use of a large air gap (in the order of 0.150 in.) in the circuit between the element and the detonator. This gap is closed by the force of impact with heavier targets. A small gap (in the order of 0.010 in.) may be used if a material with a suitable dielectric is added. Upon impact with the target, sufficient energy must be generated by the piezoelectric element to cause electrical arcing through the dielectric permitting normal functioning. The use of a bleeder resistor is recommended even with a spark gap. The bleeder resistor should directly shunt the piezoelectric element and not include the spark gap in its circuit.

The Piezoelectric Control-Power Supply, XM22E4, is shown in Fig. 3-6[2]. It is the power source for the XM539E4 Base Fuze of the XM409 HEAT Cartridge. The power supply, housed in the nose, was designed to supply the base element with an electrical charge at the proper time. The minimum charge is set at 300 volts with 1000-picofarad capacitance. Basically, the power supply consists of a piezoelectric ceramic element and an inertia ball switch, both contained within a steel envelope that is hermetically sealed.

The piezoid is held in an anvil that provides support during setback and also provides electrical connection to the terminal pin. From there, a wire connects to the fuze in the base. A fulcrum plate bears against the opposite face of the piezoid and also acts as the other leg of the electrical connection that follows through the adjacent parts and to the impact switch. Further electrical continuity is interrupted by the switch insulator. Upon deceleration due to impact or graze function, the ball is driven forward, deflecting the tanks of the switch, and making contact with the steel envelope. The envelope is grounded to the projectile, thereby completing the circuit and allowing the energy in the piezoid to flow to the fuze.

Electrical energy is stored in the piezoid by a unique reversal of piezo-strain. Setback forces, acting on the components in front of the piezoid (viz: the fulcrum plate, shorting bar, ball support), generate a compressive strain within the piezoid. This strain produces an electrical potential between the piezoid surfaces. As the setback forces approach a maximum value, setback deflects the shorting bar tang and makes contact with the anvil through the slot provided in the fulcrum plate, causing a short circuit between the piezoid surfaces. The short reduces the potential across the piezoid to zero while the piezoid is still strained. When the setback forces decrease, the shorting bar tang returns to its original position, removing the short. The piezoid is unstrained as setback decays to zero, generating a new potential of opposite polarity which is retained by the capacitance of the element until the ball switch is closed. The ball switch was designed to function upon graze impact and upon impacting soft targets that do not crush the nose of the round.

3-4.3.2 Electromagnetic Generators

Electromagnetic generators are divided into two general types, rotated and sliding. Both of

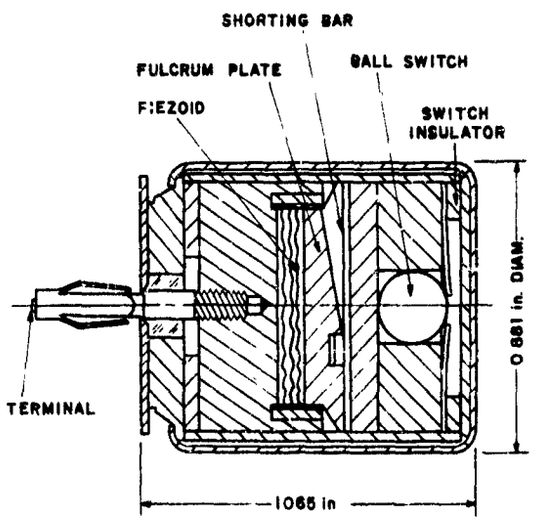

Figure 3-6. Piezoelectric Control-Power Supply, XM22E4

these necessitate relative movement between a magnet and a conducting coil.

The generated voltage depends upon the number of lines of magnetic force which the conductor can cut and the velocity with which this cutting is accomplished. As an example of the first type, a fuze may be supplied with energy from an electric generator that is wind-driven by an external propeller at speeds up to 50,000 rpm. The generator must be small, light, rugged, stable, and simple in operation. The rotor is a small permanent magnet while the stator carries two windings, one for low voltage and the other for high voltage. The low voltage, AC, heats the vacuum tube filaments but the high voltage is rectified with a selenium rectifier and the resulting DC signal is filtered for the plate supply. This voltage may also be used to fire an electric detonator.

Fig. 3-7 shows a typical circuit for an electrical system that can be solved for the voltage across the load resistance R_L by applying Maxwell's loop current methods. Here

$$E_g = -N\frac{d\Phi}{dt}, \text{ volt} \qquad (3\text{-}1)$$

where E_g is the generated voltage, N is the number of turns in the coil, and $d\Phi/dt$ is the rate of change of the flux in weber/sec. The flux is relatively constant, but since the rotor speed varies widely, E_g also varies. The voltage may be regulated by the following method: The load resistance is made small in comparison with the inductive reactance of the stator winding. Then as the rotor speed increases, the frequency of the generated voltage increases. However, the internal impedance of the generator increases which tends to hold the output voltage constant. Also a capacitor is shunted across the load resistor. As the frequency increases, the impedance falls which again tends to hold the voltage applied to the load constant.

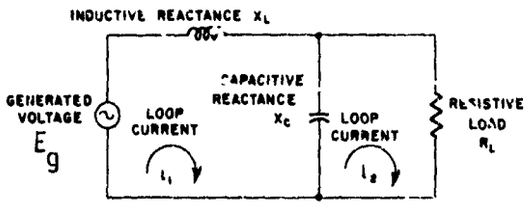

Figure 3-7. Typical Circuit for Wind-driven Generator

The other form of electromagnetic generator can be used in contact-sensing fuzes. Upon impact, a magnet is pushed through a coil or a coil is pushed past a magnet. This can be done either by using the impact forces directly to move one or the other members, or by using the impact forces to release the moving element which would then be spring-driven past the other elements.

Induced voltage for this second type of electromagnetic generator follows the same law as that stated for the rotated generator. The flux can be changed by altering the gap size in the magnetic circuit, by removing or adding a keeper to the magnet, or by introducing other materials into the magnetic circuit. Any of these circuit changes can be accomplished with the mechanical forces available during impacts.

3-4.3.3 Batteries

Batteries are appealing because they can be adapted to a large number of situations. They are of several types[3].

Batteries with radioactive elements are, in general, high-voltage low-current-drain cells. These are usually used to keep a capacitor charged. They have good temperature and age characteristics. Wet-cell type batteries can be designed with any output from low-voltage, low-drain batteries to high-voltage, high-drain batteries. At present most of them have poor age and temperature characteristics. In solid electrolyte batteries, a solid replaces the liquid electrolyte of the wet cell. Such batteries are restricted to small currents because of their high internal resistance. Reserve batteries are those that are activated just prior to launching (by some external force) or during launching (by using the launching forces). They can be designed for a wide range of conditions and have good age and temperature characteristics.

One of the most common fuze batteries in use today is the thermal battery. A thermal battery is basically a primary voltaic cell of the reserve type[4]. During storage, the electrolyte is in an inactive solid state. When heat is applied to the electrolyte (temperature of about 750°F), the electrolyte becomes a liquid ionic conductor. A complete thermal battery contains an integral source of heat that is inert until required for

operation. One way of providing heat is to surround the individual cells with a pyrotechnic material that is ignited by a percussion primer. The activation time (the time for the electrolyte to melt) varies from about ½ sec to about 8 sec depending on battery size; the smaller the battery, the faster the activation time. Thermal batteries can be designed for a variety of dimensions and outputs. Their active life is about 10 min. They are inherently rugged, withstanding all required shock and vibration tests, and have a shelf life of approximately 15 yr.

3-4.3.4 Capacitors

Capacitors can be used as convenient sources when an electric pulse of short duration is required. Advantages are lightness, economy, and stability. Capacitors may either be precharged from an external power source or from a self-contained source such as a battery or a piezoelectric transducer. Assume that the voltage to which the capacitor is charged, the minimum voltage required to initiate the detonator, and the load resistance are known. Then the time interval t during which a given capacitor can operate as a power supply, i.e., retain a usable charge, is given by

$$t = R_L\ C\ ln\frac{E_c}{E_n},\ \text{sec} \qquad (3\text{-}2)$$

where

R_L = total leakage resistance of the system, including the capacitor, ohm

C = capacitance of the capacitor, farad

E_c = voltage at which capacitor is charged, volt

E_n = voltage required to initiate the detonator at the capacitance of the capacitor, volt

The dielectric materials with the least leakage for use in fuze capacitors are Mylar*, polystyrene, and mica.

*Registered trade name, E. I. duPont de Nemours & Co., Inc., for polyethylene glycol terephthalate.

Capacitors are also useful if they are connected in parallel with a battery of high voltage but of low current. Such a battery can supply electrical energy over a period of time to charge the capacitor to the open circuit voltage of the battery and maintain that charge if its output is greater than the leakage current. The capacitor can then discharge this stored energy at the desired time and rate. The electrical energy H_e is given by

$$H_e = \tfrac{1}{2} C\ (E_c^2 - E_n^2)\ ,\ \text{joule} \qquad (3\text{-}3)$$

where the E's are in volts and C in farads.

3-4.4 TIMING CIRCUITS

Electrical time fuzes and electrical functioning delays are achieved by the same general system. Since RC timing circuits are used more commonly in the arming process, they are discussed in par. 7-3.

3-4.5 INITIATION OF THE FIRST EXPLOSIVE ELEMENT

While the details of electrical explosive elements are discussed in par. 4-3.1.4, consideration must be given to their initiation. In mechanical initiation, fuze functioning and initiation of the first element in the explosive train are directly related. Electric initiators, however, respond to an electrical signal that may be produced far from the initiator so that the electric pulse may be affected by the transmission line. Also, the resistance of the initiator can affect size and duration of this transmitted pulse from the power source. Different initiators have resistances which vary from a few ohms, or even to megohms. Energy requirements vary from a few hundred to several thousand ergs although, for certain initiators, the initiating energy is not the most satisfactory or only parameter to consider.

The designer, after deciding upon a suitable power source, must first ascertain what part of its original pulse can be passed on to the initiator and then he must choose an initiator which will detonate when the minimum available pulse is applied. This is often a difficult problem because the parameters of the initiator have not

necessarily been determined in the same terms as those that define the power source pulse.

Suppose, for example, a battery is chosen as the source. This battery operates at a certain voltage with one resistive load for a specified time interval. However, the voltage or the time may be greatly changed if an initiator is chosen with its resistance several orders of magnitude lower or higher. It then may be necessary to redetermine the action of the battery or to choose another initiator. The initiators with larger resistance often require higher voltage levels than those with the small resistances even though the energy requirements may be less. This circumstance sometimes develops into an oscillating test program in which one initiator is chosen to fit the available pulse and then the power source is modified to make the fit even closer. Then a new initiator is chosen, etc.

REFERENCES

a-t Lettered references are listed at the end of this handbook.

1. L. Doremus, *Piezoelectric Elements as High Power Electric Energy Sources*, Picatinny Arsenal, Technical Report 2562, Dover, N. J., September 1958.
2. F. Spinale, *Fuze PIBD, XM539 Series and Supply, Control Power, XM22 Series (U)*, Hesse-Eastern Div., Everett, Mass., Final Summary Report, 14 February 1966, Contract DA-19-020-ORD-5442, (Confidential).
3. R. G. Amicone, *Batteries for Fuzes (U)*, The Franklin Institute, Report LM-2024-1, Philadelphia, Pa., November 1957, Contract DA-36-034-502-ORD-1, (Confidential).
4. R. B. Goodrich, *Thermal Batteries, Reserve Power Supplies Developed for Ammunition and Weapons Applications*, Diamond Ordnance Fuze Laboratories (now U.S. Army Harry Diamond Laboratories), Report TR-155, Washington, D.C., 14 March 1955.

CHAPTER 4
THE EXPLOSIVE TRAIN

4-1 GENERAL

The explosive train is an important part of the fuze system in that it provides transistion of a relatively feeble stimulus into the desired explosive output of the main charge. An explosive train is an assembly of explosive elements arranged in order of decreasing sensitivity. While both high and low explosive trains exist, we are concerned mainly with the former in this chapter.

The reader is urged to study the handbook, *Explosive Trains*[c], if his interest is in the design or development of explosive trains. This reference contains far more detail and many more references on the subject than can be included in the scope of this handbook.

4-2 EXPLOSIVE MATERIALS

Explosive materials used in ammunition are substances or mixtures of substances which may be made to undergo a rapid chemical change, without an outside supply of oxygen, with the liberation of large quantities of energy generally accompanied by the evolution of hot gases. Certain mixtures of fuels and oxidizers can be made to explode and these are considered to be explosives. However, a substance such as a fuel which requires an outside source of oxidizer, or an oxidizer which requires an outside source of fuel to explode, is not considered an explosive. In general, explosives can be subdivided into two classes, low explosives and high explosives according to their rate of reaction in normal usage.

Nearly all types of explosives are represented in fuzes. Each one has its peculiarities and effects. Some materials are described in order to provide a basis for comparison. Since this is a complex field, only the essential ideas have been introduced for use in later chapters.

4-2.1 LOW EXPLOSIVES

An explosive is classified as a low explosive if the rate of advance of the chemical reaction zone into the unreacted explosive is less than the velocity of sound through the undisturbed material. When used in its normal manner, low explosive burns or deflagrates rather than detonates. The burning rate depends upon such characteristics as the degree of confinement, area of burning surface, and composition. In many instances, low explosives are fuels mixed with suitable oxidants in order to obtain the proper burning action.

As shown in Fig. 4-1, burning starts at the point of initiation O and travels along the column of explosive as indicated[1]. The products travel in every direction away from the burning surface. As a result, pressure is built up within the space of confinement. The velocity of propagation increases with pressure until it becomes constant.

Low explosives are divided into two groups: (1) gas-producing low explosives which include propellants, certain primer mixtures, igniter mixtures, black powder, photoflash powders, and certain delay compositions; and (2) non-gas-producing low explosives including the gasless type delay compositions.

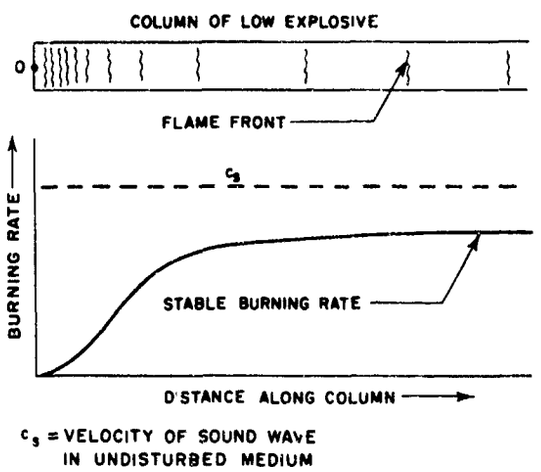

Figure 4-1. Burning Low Explosive

4-2.2 HIGH EXPLOSIVES

An explosive is classified as a high explosive if the rate of advance of the chemical reaction zone

into the unreacted explosive exceeds the velocity of sound through this explosive. This rate of advance is termed the detonation rate for the explosive under consideration. High explosives are divided into two groups: primary and secondary.

Primary high explosives are characterized by their extreme sensitivity in initiation by both heat and shock[2]. The detonation rate stabilizes in a short period of time and in a very small distance even with a weak mechanical or heat stimulus. It is generally considered that materials such as lead azide, lead styphnate, diazodinitrophenol, and hexanitromannite are primary high explosives.

Secondary high explosives are not readily initiated by heat or mechanical shock but rather by an explosive shock from a primary explosive. Materials such as PETN, RDX, tetryl, Composition B, Composition A-3, Composition C-4, TNT, and picratol are considered secondary high explosives.

Certain materials can be cited that apparently show an overlapping of definitions even though these definitions are the ones commonly used. For example, a double-base propellant when initiated with an igniter reacts as a low explosive; but this material can be made to detonate if it is initiated with an intense shock. Conversely, TNT, a high explosive, can be ignited by flame under certain conditions, and it will burn without detonating.

The detonation velocities of high explosives are illustrated in Figs. 4-2 and 4-3. Fig. 4-2 shows a column of high explosive that has been initiated at O. When the reaction occurs properly, the rate of propagation increases rapidly exceeds the velocity of sound c_s in the unreacted explosive, and forms a detonation wave that has a definite stable velocity.

Fig. 4-3 shows the rate of propagation of a reaction front under ideal conditions (upper curve) and poor conditions (lower curve). The reaction starts and becomes a detonation if the proper conditions exist. However, if the initiating stimulus is insufficient or if the physical conditions (such as confinement or packing) are poor, the reaction rate may follow the lower curve. The front may then travel at a much lower speed and this speed may even fall off rapidly.

This growth of a burning reaction to a detonation is influenced considerably by the conditions of density, confinement, and geometry as well as the vigor of initiation, particle size, amount of charge reacted initially, and other factors.

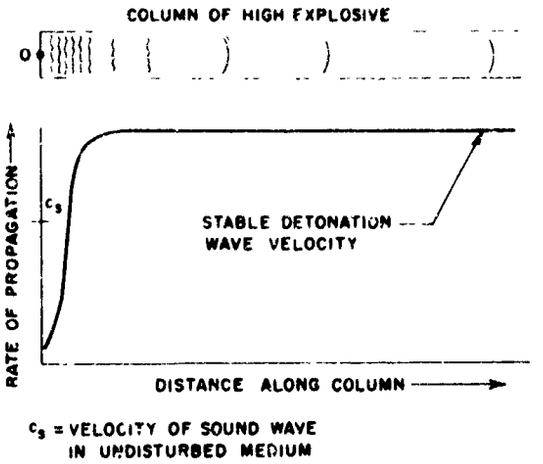

Figure 4-2. Detonating High Explosive

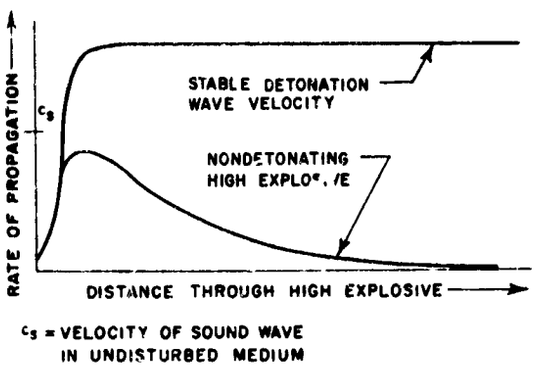

Figure 4-3. Examples of Good and Poor Detonations

4-2.3 CHARACTERISTICS OF HIGH EXPLOSIVES

Some of the most important characteristics are sensitivity, stability, detonation rate, compatibility, and destructive effect. Although these properties are the ones of most interest to the fuze designer, they are, unfortunately, difficult to measure in terms of an absolute index. Standard laboratory tests, empirical in nature, are still used to provide *relative* ratings for the different explosives. Hence, the designer must rely upon these until more precise methods of evaluation are devised.

Input sensitivity refers to the energy stimulus required to cause the explosive to react. A highly sensitive explosive is one that initiates as a result

of a low energy input. All explosives have characteristic sensitivities to various forms of stimuli such as mechanical, electrical, or heat impulses.

The most common form of mechanical stimulus is impact. See Table 4-1 for impact sensitivity ratings of explosives. *Sensitivity* of an explosive to impact is determined by dropping a 2-kg weight on a sample of the explosive from different heights. Sensitivity is then defined as the least height at which 1 out of 10 tries results in an activation. The greater the drop height, the lower is the sensitivity. Different apparatus yield slight differences in results. There are two types of apparatus commonly employed: one developed by the Bureau of Mines[3] and one by Picatinny Arsenal[4].

TABLE 4-1. IMPACT SENSITIVITY OF EXPLOSIVES

Explosive	*PA Impact Drop of 2-kg Weight, in.*	*Bureau of Mines, in.*
Lead Azide	5	7
Lead Styphnate	3	7
TNT	14	40
RDX	8	13
Tetryl	8	11
Composition B	14	30

Heat energy may be applied as friction. The friction pendulum test measures sensitivity of an explosive when exposed to a pendulum on which a shoe swings and rubs on the explosive. This test shows to what extent the explosive is affected by friction and impact.

Another method for determining sensitivity to explosive input is provided by a brisance test. Brisance is the shattering effect shown by an explosive. The weight of a primary explosive necessary to obtain the maximum crushed sand from the sample explosive is found. The standard test uses a sand bomb holding 200 g of special sand. A No. 6 blasting cap containing 0.4 g of the sample explosive is buried in the sand. The weight of lead azide (used to initiate the sample explosive) necessary for the sample to crush the greatest amount of sand is the measure of input sensitivity. For example, explosive A is considered more sensitive than explosive B if less azide is required for A than for B. Other recent methods for measuring output include tests of detonation rate, internal blast, plate dent, air shock, and cord gap tests.

Stability is the measure of an explosive's ability to remain unaffected during prolonged storage or by adverse environmental conditions (pressure, temperature, humidity). Samples of the explosive are removed periodically (annually) from storage and tested for any change in properties. Ordinarily the time required for such surveillance tests is too long, hence accelerated tests are carried out under simulated environmental conditions. Weight loss, volume of gas evolved, time for traces of nitrogen oxides to appear, temperature of ignition, decomposition, or detonation provide data from which the stability of the explosive may be inferred with a reasonable degree of certainty.

Compatibility implies that two materials, such as an explosive charge and its container, do not react chemically when in contact with or in proximity to each other, particularly over long periods of storage. Incompatibilities may produce either more sensitive or less sensitive compounds or affect the parts they touch. If the metal container is incompatible with the explosive, coating or plating it with a compatible material will often resolve the difficulty. The compatibility of two materials may be determined by storing them together for a long time under both ordinary and extreme conditions of temperature and humidity. Table 4-2 lists compatibility relations among various metals and common explosive materials. The blank spaces indicate no definite results to date.

Table 4-3 lists several physical properties of high explosives. The densities are given in g/cm^3 and the detonation velocities in m/sec. Other properties are found in standard reference books[5,6].

Table 4-4 contains a list of common explosive materials. They are used, for example, in primers, detonators, leads, and boosters (see par. 4-3).

4-2.4 PRECAUTIONS FOR EXPLOSIVES

No explosive materials are safe; but when handled properly, all of them are relatively safe[7]. The first requisite for safe handling of explosives is to cultivate respect for them. One who learns only by experience may find that his first experience is his last. The potentialities of all common explosives should be learned so that any one of them can be handled safely.

TABLE 4-2. COMPATIBILITY OF COMMON EXPLOSIVES AND METALS

	Lead Azide	*Lead Styphnate*	*PETN*	*RDX*	*Tetryl*
Magnesium	N		B N S		
Aluminum	A N	A N	A N VS	A N VS	A N
Zinc	C N			A	B VS
Iron	N			A	B S
Steel	C N		B N VS	A VS S	C H
Tin	A N			A	A N
Cadmium	C				A
Copper	D N	A	B N VS	A S S	A N
Nickel	C			A	A N
Lead	N			A	A N
Cadmium plated steel			B N S	VS VS	A N
Copper plated steel	N		B N VS	B VS VS	A VS
Nickel plated steel	N		B N VS	A N S	A N
Zinc plated steel	N		B N VS	A N S	A N
Tin plated steel	N			A	B VS
Magnesium aluminum	VS		B N S		
Monel Metal	C N				
Brass	D N		B N S	A S S	B VS
Bronze	N			A	A VS
18-8 stainless steel	A N	A	A N N	A N N	A N
Titanium	N			N	N
Silver	N			N	N

CODE

A no reaction
B slight reaction
C reacts readily
D reacts to form sensitive materials
H heavy corrosion of metals
VS very slight corrosion of metals
S slight corrosion of metals
N no corrosion

4-2.4.1 General Rules for Handling Explosives

(1) Consult the safety regulations prescribed by the military agency and by the local and Federal Governments.

(2) Conduct all experiments in the prescribed laboratory space, never near storage spaces of bulk explosives.

(3) Experiment with the smallest sample of explosive that will answer the purpose.

(4) Keep all work areas free from contaminants.

(5) Avoid accumulation of charges of static electricity.

(6) Avoid flame- and spark-producing equipment.

(7) Keep to a minimum the number of personnel at work in the same area, but one man should never work alone.

(8) Be sure that the chambers for "loading" and "exploding" are well shielded electrically and mechanically.

(9) Some explosive materials are stored wet, some dry, and some in special containers. Insure that the special requirements for each type are complied with in full.

TABLE 4-3. PHYSICAL PROPERTIES OF FUZE EXPLOSIVES

		Physical Characteristics		*Detonating Velocity*		*Loading Pressure*	
Explosive	*How Loaded*	*Crystal Density g/cm³*	*Melting Point, °C*	*Density Used, g/cm³*	*Velocity, m/sec*	*Pressure, psi*	*Density, g/cm³*
Tetryl[a]	Pressed	1.73	130	1.71	7850	5,000	1.47
						15,000	1.63
RDX[b]	Pressed	1.82	204	1.65	8180	5,000	1.52
						15,000	1.65
PETN[c]	Pressed	1.77	141	1.70	8300	5,000	1.58
						20,000	1.71
Lead Azide	Pressed	4.80	Decomposes	4.0	5180	5,000	2.71
						15,000	3.07
Lead Styphnate	Pressed	3.02	Detonates	2.9	5200	5,000	2.23
						15,000	2.57
TNT[d]	Cast or Pressed	1.65	81	1.56	6640	5,000	1.40
					6825	15,000	1.52

NOTE:
a 2,4,6, Trinitrophenyl Methylnitramine
b Cyclotrimethylenetrinitramine
c Pentaerythrite Tetranitrate
d 2,4,6, Trinitrotoluene

TABLE 4-4. COMMON EXPLOSIVE MATERIALS

Use	*Normally Used*	*Acceptable for mixtures*	*Use Only for Special Applications*
Primer	Lead Azide Lead Styphnate Basic or Normal	Antimony Sulfide Barium Nitrate Lead Sulfocyanate Nitrocellulose Tetracene	Diazodinitrophenol Mannitol Hexanitrate Mercury Fulminate Nitrostarch
Detonator			
Intermediate Charge	Lead Azide		Same as above
Base Charge	Lead Azide PETN Tetryl		Same as above
Lead or Booster	RDX RDX/wax Tetryl		Pentolite Pressed TNT PETN

4-2.4.2 Storage of Live Fuzes

Fuzes like other explosive items are normally stored in igloo magazines covered with earth. Protection is afforded against fuze initiation due to external explosions and against spreading the effects of an explosion of the fuzes. For the purpose of hazard categorization, ammunition is divided into twelve classes depending upon their relative strength and sensitivity. Of these items fuzes are of medium hazard, hence are listed in classes 3 to 8 depending upon their contents and packaging.

4-3 INITIAL EXPLOSIVE COMPONENTS

4-3.1 GENERAL CHARACTERISTICS

It has been convenient to use the term *initiator* to refer to a class of devices including primers, detonators, and several special devices that are all initial explosive components.

A *primer* is a relatively small, sensitive explosive component used as the first element in an explosive train. As such it serves as an energy transducer, converting electrical or mechanical energy into explosive energy. In this respect, then, the primer is unique among the other explosive components in a train.

A primer, which is loaded with sensitive material, has a relatively small explosive output. It may not detonate, but it may induce detonation in succeeding components of the train. Sometimes, however, the purpose of a primer is performed, for convenience in fuze design, by other components such as an electric detonator.

A *detonator* is a small, sensitive, explosive component that is capable of reliably initiating high order detonation in the next high explosive element in the explosive train. It differs from a primer in that its output is an intense shock wave. It can be initiated by nonexplosive energy or by the output of a primer. Furthermore, it will detonate when acted upon by sufficient heat, mechanical, or electrical energy.

Primers and detonators are commonly placed into two groups, namely mechanical and electrical. Electrical includes those which are initiated by an electric stimulus while all others are mechanical. Therefore, the mechanical group includes not only percussion and stab elements which are initiated by the mechanical motion of a firing pin but also flash detonators which are included because of their similarity in construction and sensitivity. As a group, electrical initiators are more sensitive and differ from the mechanical group in that they contain the initiating mechanism, the plug, as an integral part. The paragraphs which follow describe the common initiator types.

4-3.1.1 Stab Initiators

The stab initiator is a rather simple item consisting of a cup loaded with explosives and covered with a closing disk. It is sensitive to mechanical energy. A typical stab detonator is shown in Fig. 4-4(A).

4-3.1.2 Percussion Primers

Percussion primers differ from stab initiators in that they are initiated and fired without puncturing or rupturing their containers. They are therefore used in fuzes mainly as initiators for obturated (sealed) delay elements. The essential components of a percussion primer are a cup, a thin layer of priming mix, a sealing disk and an anvil. Initiation is accomplished by a blunt firing pin which squeezes the priming mix between cup and anvil. Typical percussion primers are shown in Fig. 4-4(B) and (C). In general, they are less sensitive than stab initiators (12 in.-oz is a typical "all-fire" point). Percussion primer cups are constructed of ductile metals, commonly brass, in order to avoid rupture by the firing pin.

4-3.1.3 Flash Detonators

Flash detonators are essentially identical in construction to stab initiators. They are sensitive to heat. A typical flash detonator is shown in Fig. 4-4(D). Flash detonators are considered to be initiators for convenience of grouping even though they are not the first element in the explosive train.

4-3.1.4 Electric Initiators

Electric primers and electric detonators differ from stab initiators in that they contain the initiation mechanism as an integral part. They constitute the fastest growing class of explosive initiators (see also par. 4-4.5.2).

Several types of initiation mechanisms are commonly employed in electric initiators: hot wire bridge, exploding bridgewire, film bridge, conductive mixture, and spark gap. Typical electric initiators are shown in Fig. 4-5. Electrical contact is by means of two wires, by center pin and case, or occasionally by two pins.

To describe the construction, let us examine a wire lead initiator. Two lead wires are molded into a cylindrical plug, usually of Bakelite, so that the ends of the wire are separated by a controlled distance on the flat end of the plug. This gap can then be bridged with a graphite film or a bridgewire.

4-3.1.5 Squibs

Metal parts of squibs are identical to those of electric initiators. A typical squib is shown in Fig. 4-6. A low explosive, flash charge is provided to initiate the action of pyrotechnic devices (see also par. 4-4.5.2).

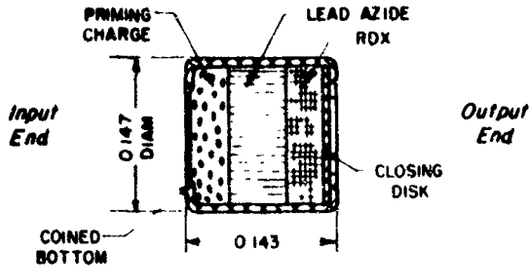

(A) Stab Detonator, M55

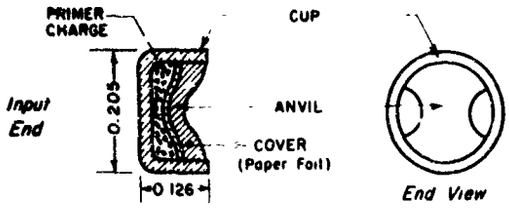

(B) Percussion Primer, M29A1

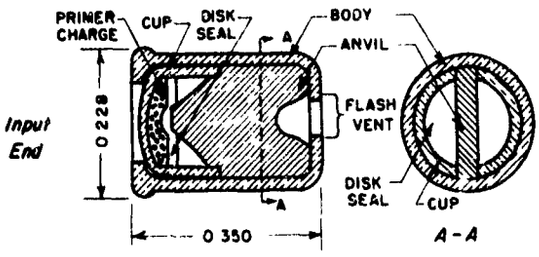

(C) Percussion Primer, M39A1

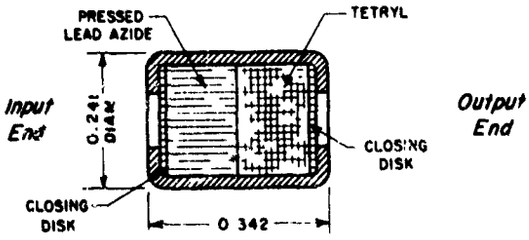

(D) Flash Detonator, M17

NOTE - ALL DIMENSIONS IN INCHES

Figure 4-4. Typical Primers and Detonators (Mechanical)

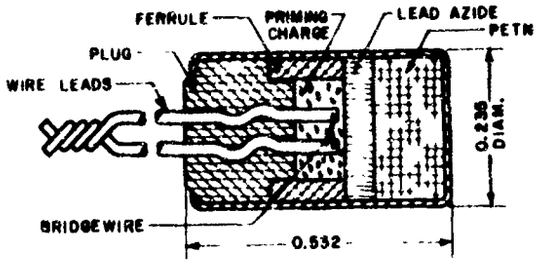

(A) Bridgewire, Wire Lead, M36A1

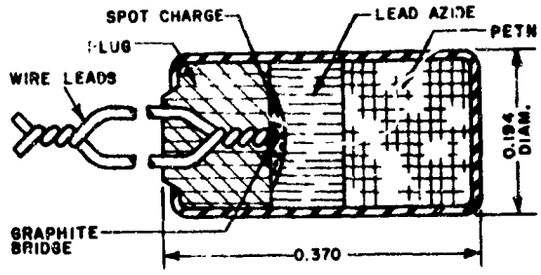

(B) Graphite Bridge, Wire Lead, M51

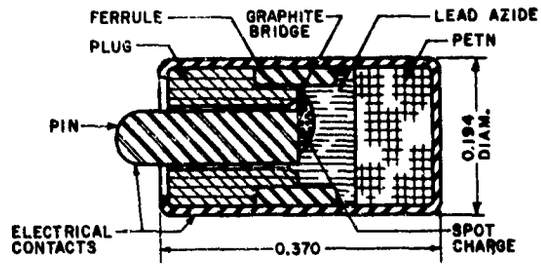

(C) Graphite Bridge, Button, M69

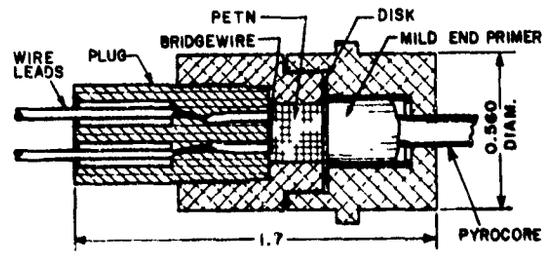

(D) Exploding Bridgewire, Wire Lead

NOTE - ALL DIMENSIONS IN INCHES

Figure 4-5. Typical Primers and Detonators (Electrical)

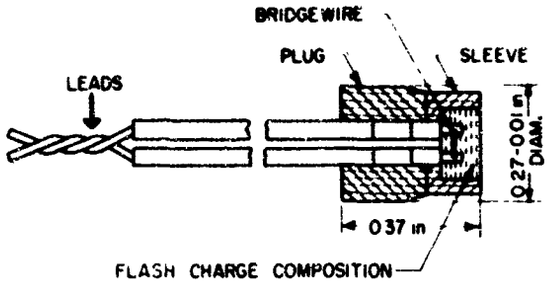

Figure 4-6. Electric Squib, M2

4-3.2 INPUT CONSIDERATIONS

When using primers and detonators, one must consider both input and output characteristics. The decision as to which characteristic to use is often dictated to the designer by the quantity of input energy available. For details on fuze initiation see pars. 3-3 and 3-4. Sensitivity should be no greater than necessary in the required application.

Output of the initiator must be considered at the same time as input. The system requirements will usually determine the type of output needed: a flame, a detonation, or a mechanical function. While perhaps to a lesser extent in this regard, the fuze designer is also concerned with construction features.

Information has been published on the characteristics of initiators that can serve as a good starting point for consideration[j, o, 8]. Functioning times as well as sensitivity are readily available together with sizes, mounting methods, and connections. The exploding bridgewire initiators have been surveyed in a journal article[9]. Many explosive trains of different types exist that have a proven record of performance [c].

4-3.3 OUTPUT CHARACTERISTICS

The output of a primer includes hot gases, hot particles, a pressure pulse which, in some cases, may be a strong shock, and thermal radiation. Measurable quantities which have been used to characterize primer output include: the volume of the gas emitted; the impulse imparted to a colume of mercury by the pressure pulse; the light output as measured by a photocell; the temperature rise of a thermocouple exposed to the output gases and particles; the ionic conduction between a pair of probes exposed to the output; the pressure rise in a chamber in which the output is confined; the propagation velocity of the air shock, the hangfire, namely the time lapse between supply of mechanical energy to the primer output; and flame duration. Each of these measurable quantities has been related to effectiveness in one or another application by experiment, theory, or intuition. However, no general quantitative relationship of value to a designer has been developed.

As its name implies, a detonator is intended to induce detonation in a subsequent charge. The two features of its output which are useful for this purpose are the shock wave it emits and the high velocity of the fragments of its case. The output effectiveness of detonators of current designs is directly related to the quantity of the explosive which detonates, and to the vigor of this detonation. These quantities are somewhat less predictable than in most other components because the transitions from burning to detonation and from low order to high order detonation take place in the detonator.

These transitions can require anything from a hundredth of an inch to the whole length of a detonator, depending upon such factors as loading density, composition, particle size, confinement, and column diameter. However, recent developments in lead azide production have resulted in materials in which these transitions require so little explosive that the output of a detonator can be predicted with a fair degree of confidence.

The effective output of a detonator includes factors of pressure, duration, and area over which the pressure acts. Clearly a simple product of these quantities is inadequate as a characterization because a low pressure of either long duration or large extent would obviously be ineffective.

Detonator output is measured by means of gap or barrier tests, sand test, copper block test, lead disk test, steel plate dent test, Hopkinson bar test and in terms of the velocity of the air shock produced [c].

The output characteristics are achieved by means of the explosives used. Primers are loaded with one of a variety of priming compositions. Typical detonators have three charges—a priming charge, an intermediate charge, and a base charge—although two of these can be combined. The priming charge is like that of the primer. The intermediate charge is usually lead azide while the base charge can be lead azide, PETN, tetryl, or RDX.

4-3.4 CONSTRUCTION

Initiators usually consist of simple cylindrical metal cups into which explosives are pressed and various inert parts inserted. MIL-STD-320 describes design practices and specifies the standard dimensions, tolerances, finishes, and materials for initiator cups. In general, all initiator designs should conform to this Standard. However, it is not the intent of the Standard to inhibit the development of new concepts so that an occasional departure from the standard may be necessary for special circumstances.

Initiators are loaded by pressing powdered explosive into the cup at between 10,000 and 20,000 psi. When the length of an explosive charge is greater than its diameter, the usual practice is to load it in increments not over one diameter long. After loading, the cup is closed with a sealing disk and crimped. In addition to the explosive, electric initiators contain a plug assembly consisting of the plug, electrodes, and bridge.

4-4 OTHER EXPLOSIVE COMPONENTS

4-4.1 DELAY ELEMENTS

Delay elements are incorporated into an explosive train to enhance target damage, by allowing the missile to penetrate before exploding, or to control the timing of sequential operations. When the explosive train provides a time lag, the component creating this lag is called a delay element. The delay must, of course, be so incorporated in the fuze that it will not be damaged during impact with the target. This feature is most easily achieved by placing the fuze in the base of the missile. If this is not possible, the delay must be buried deep in the fuze cavity in the event that the forward portion of the fuze is stripped from the missile on target impact.

Generally, delay columns burn like a cigarette, i.e., they are ignited at one end and burn linearly. Delays may be ignited by a suitable primer. Ignition should occur with as little disruption of the delay material as possible because a violent ignition can disrupt or even bypass the delay column. For this reason, baffles, special primer assemblies, and expansion chambers are sometimes included in a delay element. A typical arrangement is that of Delay Element, M9, shown in Fig. 4-7. Representative delays covering various time ranges have been compiled in a compendium[10].

Explosives for delay elements may be grouped into two categories: gas-producing delay mixtures and "gasless" delay mixtures. (See pars. 6-5 and 6-6 for mechanical means of achieving delay and par. 7-3 for electrical methods.)

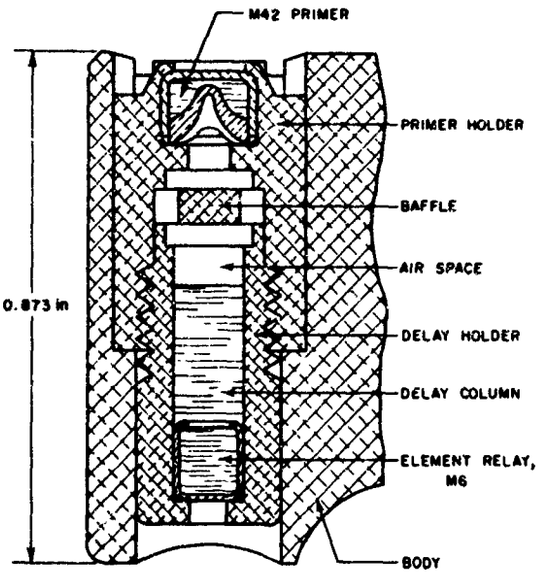

Figure 4-7. Delay Element, M9

4-4.1.1 Gas-producing Delay Mixtures

Black powder has long been employed as a delay material. Formed into compressed pellets, columns, or ring segments, it has been used to obtain delay times from several hundred milliseconds to one minute. Black powder is easily loaded and ignited. It is readily available in a variety of granulations and quality. However, since burning black powder produces considerable quantities of heat and gas, vents or gas collecting chambers must be incorporated into such delay systems. Black powder is affected by loading pressure, atmospheric pressure, moisture, and confinement. It has largely been supplanted by other delay compositions, particularly in more recent designs.

4-4.1.2 "Gasless" Delay Mixtures

Since pressure of the evolved gas affects the performance of delays, efforts have been made

to produce "gasless" delay mixtures[11,12]. "Gasless" mixtures are superior to other types, particularly where long delay times are needed or where space is limited and escape of hot gases cannot be tolerated. In general, "gasless" delays are intimate pyrotechnic mixtures of an oxidant and a metallic fuel carefully selected to yield a minimum volume of gaseous reaction products.

Delays that are sealed or protected from the atmosphere produce more consistent times and have better surveillance characteristics. Hence, there is a trend toward totally sealed delay systems.

4-4.2 RELAYS

A relay is a small explosive component used to pick up a weak explosive stimulus, augment it, and transmit the amplified impulse to the next component in the explosive train. Nearly all relays are loaded with lead azide, a primary explosive. The diameter of a relay is generally the same as that of the preceding and the following component but it is often thin. Relay cups now used are made of aluminum.

Relays are commonly used to "pick up" the explosion from a delay element or a black powder delay train. They are sometimes used to receive the explosion transferred across a large air gap. Subsequently, they initiate a detonator.

A typical Relay, the XM11, is shown in Fig. 4-8. It has a closing disk of onion skin on the input end to contain the explosive but not to interfere with picking up a small explosive stimulus.

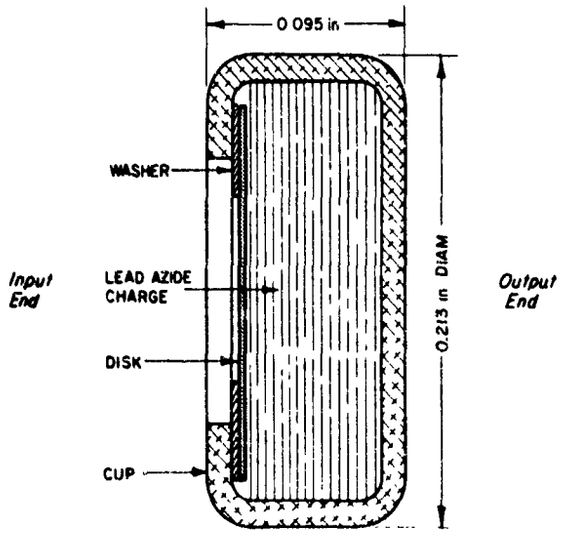

Figure 4-8. Relay, XM11

4-4.3 LEADS

The purpose of a lead (rhymes with feed) is to transmit the detonation wave from detonator to booster. Leads are less sensitive to initiation than either detonators or relays and are arranged accordingly in the explosive train.

Leads may be of the flanged type or of the closed type. Flanged cups are open on the flanged end while closed cups have a closing disk similar to that of the stab or flash detonator shown in Fig. 4-4(A) and (D). Flanged cups are pressed into place whereas closed leads are held by staking. The choice as to type is based on considerations for handling and safety. For example, the flanged type lead, having exposed explosive on the flanged or output end would be undesirable in designs where the lead protrudes from the base or where dusting or flaking of the explosive charge could interfere with the operation of the fuze mechanism.

The input end, the solid end of the cup or the closing disk, receives the shock wave from the detonator. This wall thickness is therefore important. In practice, the wall is generally 0.005 to 0.010 in. thick.

Loading pressures for leads range from about 10,000 to 20,000 psi. For convenience in manufacturing, pellets are often preformed and then reconsolidated in the cup. Tetryl and RDX are the most common explosives for leads.

Because leads are used to transmit detonation waves, their size and shape might conveniently be set by the configuration of the fuze; i.e., the diameter is nearly equal to the preceding component and the length depends on the distance between preceding and succeeding components. However, most efficient functioning is obtained by properly designing the lead just as any other component. The efficiency of the lead depends upon explosive density, confinement, length, and diameter. A common length to diameter ratio is 1 to 1. The effectiveness of the lead depends upon its initiating the next component (booster charge) over a sufficient area so that it too will form a stable detonation. Some configurations demand duplicate leads so as to assure reliable initiation of the booster charge.

4-4.4 BOOSTER CHARGES

The booster charge completes the fuze explosive train. It contains more explosive material than any other element in the train. The booster

charge is initiated by one or several leads or by a detonator; it amplifies the detonation wave to a sufficient magnitude or maintains detonating conditions for a long enough time to initiate the main charge of the munition.

In common usage, the term booster charge is abbreviated to booster. Actually, a booster is a separate fuze component provided to augment the other explosive components of a fuze so as to cause detonation of the main explosive filling. It consists of a housing, the booster charge, a detonator, and an auxiliary arming device. A booster is shown in Fig. 10-6 wherein part O is the booster charge.

4-4.4.1 Explosives Used in Booster Charges

The density to which the explosive is packed into a booster charge affects both sensitivity and output. Thus loading techniques are important. At present, there are three methods for loading booster cups: (1) loading a preformed, fully consolidated pellet, (2) inserting a preformed pellet and applying consolidating pressure with the pellet in place, and (3) pouring a loose charge into the cup and consolidating it in place.

The first method is the most convenient in production and the most widely used in fuze practice. Pellets can be produced to close size tolerances and uniformity. However, this method is not acceptable with more complicated shapes or in some high performance weapons. Conical shapes, for example, are always pressed in place. Each of the last two methods assures a firmer mounting of the explosive by positively preventing voids between pellet and cup. Hence, one or the other must be used when the round is subjected to accelerations sufficiently large to shift, fracture, or further consolidate the pellet since these conditions may lead to premature or improper detonations. The third method is the most convenient when only a few samples are needed.

Tetryl and RDX are the most widely used explosives for boosters. Other explosives have been used, such as granular TNT, RDX and wax mixtures, and PETN.

4-4.4.2 Description of Booster Charges

While the shape of the explosive charge affects input and output characteristics to some extent, the shape is commonly dictated by space considerations. If the booster charge is external to the bursting charge, extreme ratios of length to diameter are to be avoided. For best output, the length to diameter ratio should be greater than 0.3 and less than 3.0. Ratios in the order of 2:3 or 1:2 seem to be optimum. Shapes with an increasing cross section outward from the initiating end are more efficient, but difficult to load uniformly[13].

4-4.5 SPECIAL EXPLOSIVE ELEMENTS

A number of special explosive components may be found in explosive trains or as independent elements.

4-4.5.1 Actuators

An actuator is an explosive-actuated mechanical device which does not have an explosive output. In an explosive train, it is used to do mechanical work such as close a switch or align a rotor. Most present actuators are electrically initiated. They are discussed more fully in par. 7-2.

4-4.5.2 Igniters (Squibs)

Igniters or squibs are used to ignite propellants, pyrotechnics, and flame-sensitive explosives. They have a small explosive output that consists of a flash or a flame[14]. A typical squib is shown in Fig. 4-6. Igniters are electrically initiated and are similar in construction to electric primers. Igniters consist of a cylindrical cup (usually aluminum, copper, or plastic), lead wires, a plug and a wire or carbon bridge assembly, and a small explosive charge. The cup may be vented or completely open on the output end.

4-4.5.3 Fuses

Fuses are tubes of fabric or metal which contain a column of black powder or pyrotechnic material. (Note the spelling of fuses as distinguished from fuzes.) They are used to transmit fire to a detonator but only after a specified time delay. Delay times are adjusted by varying the length of the fuse. Delay fuses were employed in early designs of hand grenade and pyrotechnic explosive trains.

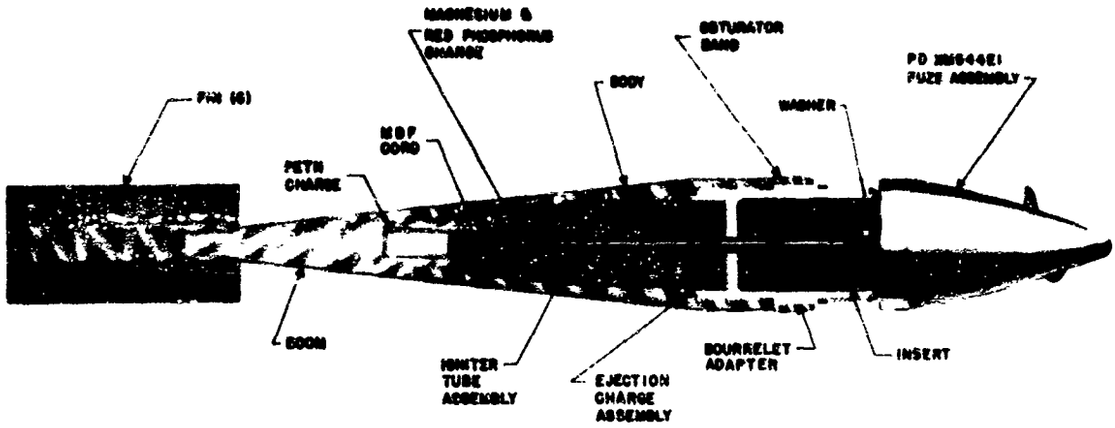

Figure 4-9. MDF Used in 37 mm Spotting Cartridge, XM415E7

4-4.5.4 Detonating Cord

Detonating cord consists of a small fabric or plastic tube filled with a high explosive, usually PETN. Detonating cord must be initiated by a high intensity shock wave; it in turn propagates a detonation wave along its entire length.

4-4.5.5 Mild Detonating Fuze

Mild Detonating Fuze (MDF) consists of a column of high explosive material in a flexible metal sheath. Currently available MDF is made with PETN as the explosive charge enclosed in a lead sheath. Experiments are underway with other shield materials and explosives[15].

MDF is used mainly to transfer a detonation some distance away. It is available in charge weights from 1 to 20 grains of explosive charge per foot. Smaller sizes of this material will transmit a detonation with little disturbance to the surroundings. A minimum of protection is required to prevent blast and fragments from causing damage.

A typical fuze application of MDF is shown in Fig. 4-9[15]. The problem was to simulate the full-caliber Davy Crockett round with boom and tail fin in a subcaliber spotting round. The figure shows the 37 mm Spotting Cartridge XM415E7, with Fuze, XM544E1. Operation is as follows: On impact, the fuze ignites an XM64 Detonator that ignites a lead cup assembly that in turn ignites the MDF in the igniter tube assembly (1/8 in. inside diameter by 5 in. long). The MDF detonates rearward to ignite the black powder ejection charge through flash holes in the igniter tube. The MDF continues to detonate rearward to ignite the PETN burster charge in the boom. The PETN burster charge functions before the ejection charge because the MDF has a faster reaction rate than the black powder. When the burster charge explodes, it blows off the boom with the fin and opens the rear end of the steel body. The black powder gradually builds up pressure, ejects the pyrotechnic mixture from the rear opening of the body, and ignites to generate gray smoke.

4-5 CONSIDERATIONS IN EXPLOSIVE TRAIN DESIGN

4-5.1 GENERAL

The explosive reactions employed in fuzes are usually started by relatively weak impulses. It is the purpose of the explosive train to amplify these impulses so that the main charge detonates at its stable rate. As described above, this process can encompass the following steps or processes; initiation of a deflagration, acceleration of the deflagration so that shock waves are generated, establishment of a detonation, and propagation and growth of this detonation to its stable velocity.

Normally, separate explosive components are used for most of these steps. If the projectile or missile is small enough, only one component need be used. Larger projectiles have several

components because it is too hazardous to handle large quantities of primary explosive in a single package. Hence, for safety in manufacture and assembly of ammunition, the explosive train consists of several small components.

In military items, the smaller, more sensitive charges are isolated from the larger ones for safety in handling until the item is armed. Again as pointed out earlier, mechanical design considerations indicate the advisability of small components, and chemical kinetics design considerations indicate that the most effective explosive material for one component is not necessarily the most effective for another; these considerations result in further subdivision of the explosive charges.

In the course of the growth of each detonation, discontinuities are met. Transmission of a detonation across a discontinuity is affected by a wide variety of factors including the properties of the explosive employed, the density at which the explosive is loaded, the material confining the explosives, the size and geometry of each charge, the relative positions of charges, and the nature of intervening materials. The permutations and combinations of these and other factors are innumerable. Data on all of the various combinations of interest cannot be obtained; in some cases, because of interactions, data that are available are apparently conflicting.

4-5.2 PROBLEMS IN EXPLOSIVE TRAIN DESIGN

In the course of designing the train, many problems arise such as determining sizes of the various components, packaging each one, spacing or positioning them, and, most important, making use of the new characteristics created by this train effect.

In fuzes employing delay elements, primers which produce essentially a flame output are used to initiate the deflagration. It is sometimes necessary to initiate delay mixes across a sizable air gap. Such an arrangement is practical but care must be taken to avoid destroying the reproducibility of the delay time. If initiation from the primer is marginal, delay times may become long. On the other hand, the delay time may be considerably reduced if particles from the primer imbed themselves in the mix (thus effectively shortening the delay column) or if the delay column is disrupted by the primer blast. Frequently, a web or baffle is employed between a delay and its primer to reduce blast effects and particle impingement. In general, increasing the free volume between these two will make initiation more difficult. Decreasing confinement of the delay column will have the same effect.

Flash detonators and relays are sometimes initiated from a distance by a primer, a delay, or even another detonator. In this problem particularly, precise performance data are difficult or impractical to obtain. The alignment of the two components is probably most important to successful initiation. If the air gap is confined, it should be at least as large as the detonator diameter and perhaps slightly larger.

Since quantitative data for any particular condition do not exist, trial and error methods must be used in design. A convenient method to decide upon the adequacy of a given system is to vary the charge weight of the initiating component to find the marginal condition for initiation. Generally, the designer chooses a component with double the marginal weight.

After the amplification of the explosive-impulse has carried through several components in the train and a detonation has been produced, even more care must be exercised to complete the process. Initiation of a tetryl lead from a detonator is indicative of the types of problem encountered. Once again, confinement is most important. A heavily confined charge can reliably initiate another explosive component, whereas a charge of twice that amount would be required if it were unconfined. Empirical data obtained under various conditions indicate that the effects of confinement are optimum when the wall thickness of the confining sleeve is nearly equal to the diameter of the column. On the other hand, the nature of the confining material is nearly equally important. Data have been obtained which show that a detonation can be transferred across an air gap nearly twice as far if the donor is confined in brass or steel rather than aluminum Relative data on gap distance for various acceptor-charge confining materials are: steel—13, copper—7, and aluminum—4.

In fuze explosive trains, one seldom works with unconfined charges. The explosive components used are nearly always loaded into metal cylinders or cups. Even this relatively thin-walled confinement gives considerable improvement over air confinement in transmitting or accepting

detonation. Further improvement can be made by increasing the confinement as previously indicated.

When a detonation is being transmitted from one explosive charge to another, the air gap should be kept small for greatest efficiency. Such a condition exists in initiating a booster from a lead. However, a different condition sometimes exists when firing from a detonator to a lead. In this instance, the output face of the detonator (donor charge) is confined in a metal cup. Hence, a thin metal barrier is interposed in the path of the detonation wave. The initiation mechanism of the acceptor charge may now be somewhat different because fragments of this barrier will be hurled at the surface of the next charge. It has been found that a small gap between the components greatly aids initiation in this case. So as a general rule, one can say that where detonation must be transferred across a metal barrier, the air gap between donor charge and barrier should be negligible but a small gap (in the order of 1/16 in.) between barrier and acceptor charge may be desirable. Beyond the interrupter, explosives no more sensitive than RDX should be used.

REFERENCES

a-t Lettered references are listed at the end of this handbook.

1. M. A. Cook, *The Science of High Explosives*, Reinhold Publishing Corp., N.Y., 1958.
2. F. P. Bowden and A. D. Yoffe, *Initiation and Growth of Explosion in Liquids and Solids*, Cambridge University Press, N.Y., 1952.
3. T. L. Davis, *Chemistry of Powder and Explosives*, John Wiley and Sons, N.Y., 1943.
4. *Standard Laboratory Procedure for Sensitivity, Brisance, and Stability Tests (U)*, Picatinny Arsenal, Technical Report 1401, Dover, N. J., 18 March 1944, (Confidential).
5. AMCP 706-177, Engineering Design Handbook, *Properties of Explosives of Military Interest*.
6. B. R. Federoff, *Encyclopedia of Explosives and Related Items*, Picatinny Arsenal, Dover, N. J., 1960; Vol. I, AD-257,189; Vol II, AD-422 747; Vol. III, AD-653 029.
7. AMCR 385-224, *Army Safety Manual*, Army Materiel Command Regulation, June 1964.
8. *Electric Initiator Handbook (U)*, 3rd Edition, The Franklin Institute, Philadelphia, Pa., April 1961, AD-319 980 (Confidential).
9. *Exploding Bridgewire Surveys*, Journal Article 30.0 of the JANAF Fuze Committee, 23 October 1963, AD-831 831.
10. *A Compendium of Pyrotechnic Delay Devices*, Journal Article 31.0 of the JANAF Fuze Committee, 23 October 1963, AD-474 833.
11. H. S. Leopold and E. E. Kilmer, *An Investigation of Internal Venting for Delay Actuators (U)*, U. S. Naval Ordnance Lab., White Oak, Md., NAVORD Report 5724, September 1957 (Confidential).
12. D. E. Seeger and R. E. Trezona, *Development of the 50-Millisecond-Delay T64 Electric Detonator (U)*, Picatinny Arsenal, Technical Report 2594, Dover, N. J., April 1959 (Confidential).
13. R. Stresau and M. Lipnick, *Some Aspects of the Design of Boosters*, Journal Article 21.0 of the JANAF Fuze Committee, June 20, 1961, AD-270 275.
14. F. B. Pollard and J. H. Arnold, Jr., Eds., *Aerospace Ordnance Handbook*, Prentice-Hall, Inc., N. J., 1966.
15. *Mild Detonating Cord*, Journal Article 44.0 of the JANAF Fuze Committee, 3 May 1967, AD-816 229.
16. J. H. Dickinson, *Development of Cartridge 37mm, Spotting, XM415E7 and XM446E2, W/Fuze, PD, XM544E1 for the XM77E1 Gun Used With The Davy Crockett XM29 Delivery System*, Picatinny Arsenal, Technical Report 3039, Dover, N. J., April 1964.

PART TWO—BASIC ARMING ACTIONS

INTRODUCTION

Part One deals with the fundamental principles of fuzes. The discussion includes general design considerations, principles of fuze initiation, and the explosive train.

Part Two indicates and exemplifies principles involved and methods used in the arming process. The arming process provides a transition between two conditions: (1) the safe condition which is the normal for handling; if the sensitive explosives of the fuze are initiated before desired, the bursting charge of the ammunition will not explode, and (2) the armed condition which is the normal for functioning; if the sensitive explosives are initiated at the selected time and place, the bursting charge will explode. See par. 9-2.2 for safety requirements.

CHAPTER 5
ELEMENTARY PRINCIPLES OF ARMING

5-1 GENERAL

The primary purpose of a fuze is to function the bursting charge in a munition at a specified time or place. The need for many types of fuzes is apparent when we consider the various items of ammunition in use—projectiles, bombs, rockets, guided missiles, and mines. The conditions to which a fuze is subjected when used as intended may be myriad. For the sake of safety, the fuze must be designed to withstand the effects of conditions encountered throughout the stockpile-to-target sequence. However, such environments as pressure, temperature, accelerations, or electrical fields provide forces which can be used to arm the fuze when they are different from those encountered before firing. The forces resulting from the ballistic environment will be discussed and illustrated in Part Two.

5-2 MECHANICAL ARMING CONCEPTS

The safing and arming mechanism of the fuze is placed at a point in the explosive train so that it will be followed only by high explosive materials no more sensitive to initiation than RDX. The term detonator safe conventionally designates a particular status of the arming device. A fuze is said to be detonator safe when an explosion of the detonator cannot initiate subsequent components in the explosive train (lead and booster charge). Fig. 5-1 illustrates a simple arming device which includes detonator safety. If the sensitive detonator accidentally explodes in the unarmed position, the detonation wave is forced (by the malalignment of the components) to travel such a tortuous path that it cannot initiate lead or booster charge.

The arming process consists mainly of the actions involved in aligning explosive train elements or in removing barriers along the train. The time for this process to take place is controlled so that the fuze cannot function until it has traveled a safe distance from the launching site. In terms of personnel or materiel damage, distance is all important; however, it is frequently more convenient to consider the arming action in terms of elapsed time from launching. Hence, an arming mechanism often consists of a device to measure an elapsed time interval. The designer must insure that there is sufficient energy to align the train and to control the action time in accordance with the safety requirements of the particular munition. Occasionally, in high performance weapons, an elapsed time inherent in the arming process provides sufficient delay to meet fuze safety requirements. More often though, the fuze designer must devote considerable effort to develop a suitable time-measuring device that has the required precision.

Arming mechanisms operate upon an input of energy resulting from the launching environment. This may come from a source contained in the fuze itself, or it may arise from a potential created by an external environment such as acceleration, spin, or pressure. The space in a fuze

Best Available Copy

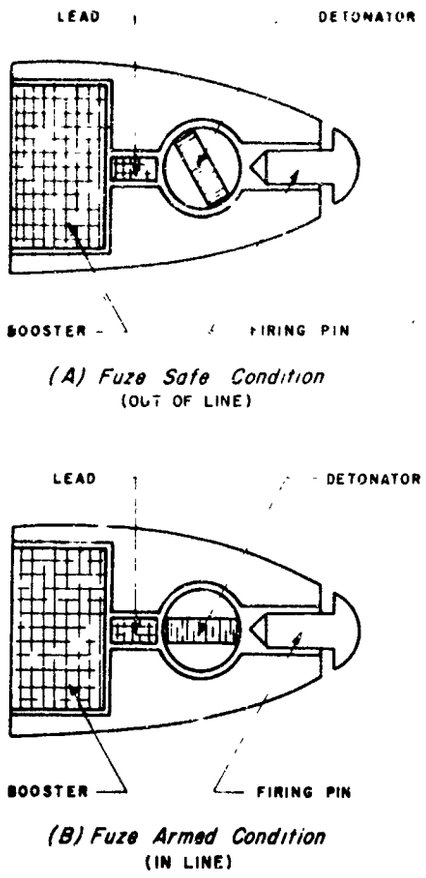

Figure 5-1. Simple Arming Device

is often small so that the energy that can be stored within is much less than that obtainable from a change in external conditions. Hence, an external source of energy is usually more convenient. However, if the environmental change is small or its effect is comparable to that created by rough handling, the designer must incorporate a power source in the fuze. Such a power source may be triggered by ballistic forces.

5-3 SEQUENCE OF FUZE BALLISTIC ENVIRONMENTS

The three ballistic environments for which a fuze may be designed are depicted in Fig. 5-2. They represent the instances when (1) the munition undergoes very high initial acceleration, (2) the munition undergoes low initial acceleration, (3) the munition undergoes a very slight or no acceleration at all. Certain ballistic equations are applicable to each of these environments but, from a design viewpoint, each presents limitations which are best characterized by examining the types of missile used in each environment.

5-3.1 BALLISTIC EQUATIONS

The subject of ballistics covers both the gross and the detailed motions of the munition during launching, during flight, and at the target; hence, the three divisions: interior ballistics, exterior ballistics, and terminal ballistics. The following basic equations are used to calculate arming forces.

5-3.1.1 Acceleration

When a projectile is fired from a gun tube, it accelerates in the gun as a result of the rapid expansion of propellant gases. This acceleration is calculated from

$$a = \frac{PA}{W} g, \text{ ft/sec}^2 \qquad (5\text{-}1)$$

where P is the gas pressure acting on the projectile, psi; W is the weight of the projectile, lb; A is $\pi d^2/4$ where d is the caliber of the projectile, in.; and g is the acceleration due to gravity, 32.2 ft/sec^2. Since A, W, and g are constant, the acceleration a is proportional to the propellant gas pressure P. A typical pressure-travel curve for a projectile in a gun tube is shown in Fig. 5-3. For convenience in calculating forces, the acceleration is often quoted in terms of g's. In the case of setback

$$a' = \frac{a}{g} = \frac{PA}{W}, \text{ g's} \qquad (5\text{-}2)$$

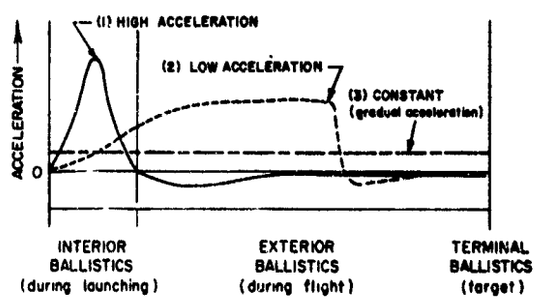

Figure 5-2. Ballistic Environments of a Fuze

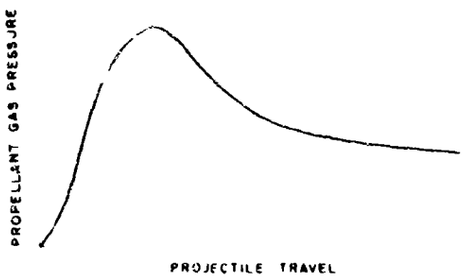

Figure 5-3. Typical Pressure-travel Curve

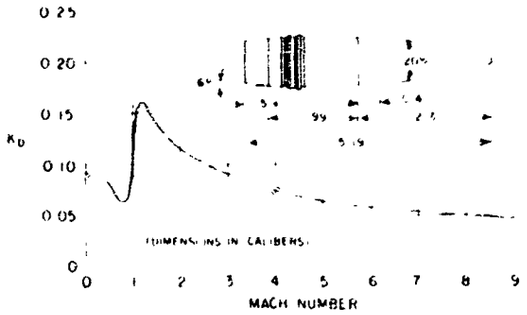

Figure 5-4. Drag Coefficient K_D

5-3.1.2 Drag

A missile encounters air resistance during flight and decelerates. Various theoretical derivations have been proposed for the forces of deceleration of which Newton's method is easiest to understand. The drag is caused by the impulses communicated to the projectile as particles hit and bounce away from it. The formula is

$$F_D = 12\rho d^2 v^2 K_D/g, \text{ lb} \qquad (5\text{-}3)$$

where ρ is the density of the air, lb/in.^{3}, d is the diameter of the projectile, in.; v is the air velocity of the projectile, ft/sec; and K_D is the drag coefficient, dimensionless. Fig. 5-4 shows, for a particular round, the relation of K_D to the Mach number (the ratio of the projectile speed to the local speed of sound).

5-3.1.3 Rotational Velocity

Many small arms and artillery projectiles are stabilized by the spin imparted by the rifling in the tube. The angular spin velocity, a source of potential for the arming process, may be calculated from either of the following equations

$$\omega = \frac{24\pi v}{nd}, \text{ rad/sec} \qquad (5\text{-}4)$$

$$\omega' = \frac{12 v}{nd}, \text{ rev/sec} \qquad (5\text{-}5)$$

where n is the twist of rifling in terms of the number of calibers of length in which the rifling makes one complete turn (the projectile travels n calibers when making one complete revolution); v is the instantaneous projectile velocity, ft/sec; and d is the caliber, in.

Fig. 5-5 is a nomogram for finding the spin velocity ω of a projectile for any muzzle velocity of several standard guns. The method of use is illustrated with the example of a 40 mm gun at 2870 fps muzzle velocity.

5-3.2 BALLISTIC CONDITIONS

Three types of ballistic conditions will be considered: high acceleration, low acceleration, and gravity acceleration.

5-3.2.1 High Acceleration

Projectiles fired from small arms, guns, howitzers, mortars, and recoilless rifles are subjected to the ballistic environment called high acceleration launching (see Fig. 5-2). During the interior ballistic period, the acceleration of the projectile reaches a maximum (40,000 g or more in some weapons) and then drops to zero by the time (2 to 20 msec) the projectile has traveled a few calibers beyond the muzzle of the gun tube. Thus, the useful inertial forces created are setback, centrifugal, and tangential (see par. 5-4).

In the exterior ballistic environment—free flight—the missile is decelerated by air friction and resistance. The drag forces on the missile produce creep of its internal parts (see par. 5-4). Finally, at the target, the missile encounters impact forces often of extreme magnitudes. These are the ballistic environments for a fuze and its components which are launched with high initial acceleration.

Two types of missile are used under these conditions: spin-stabilized and fin-stabilized. In general, fins are used for stabilizing missiles having either low or very high velocities and spin is

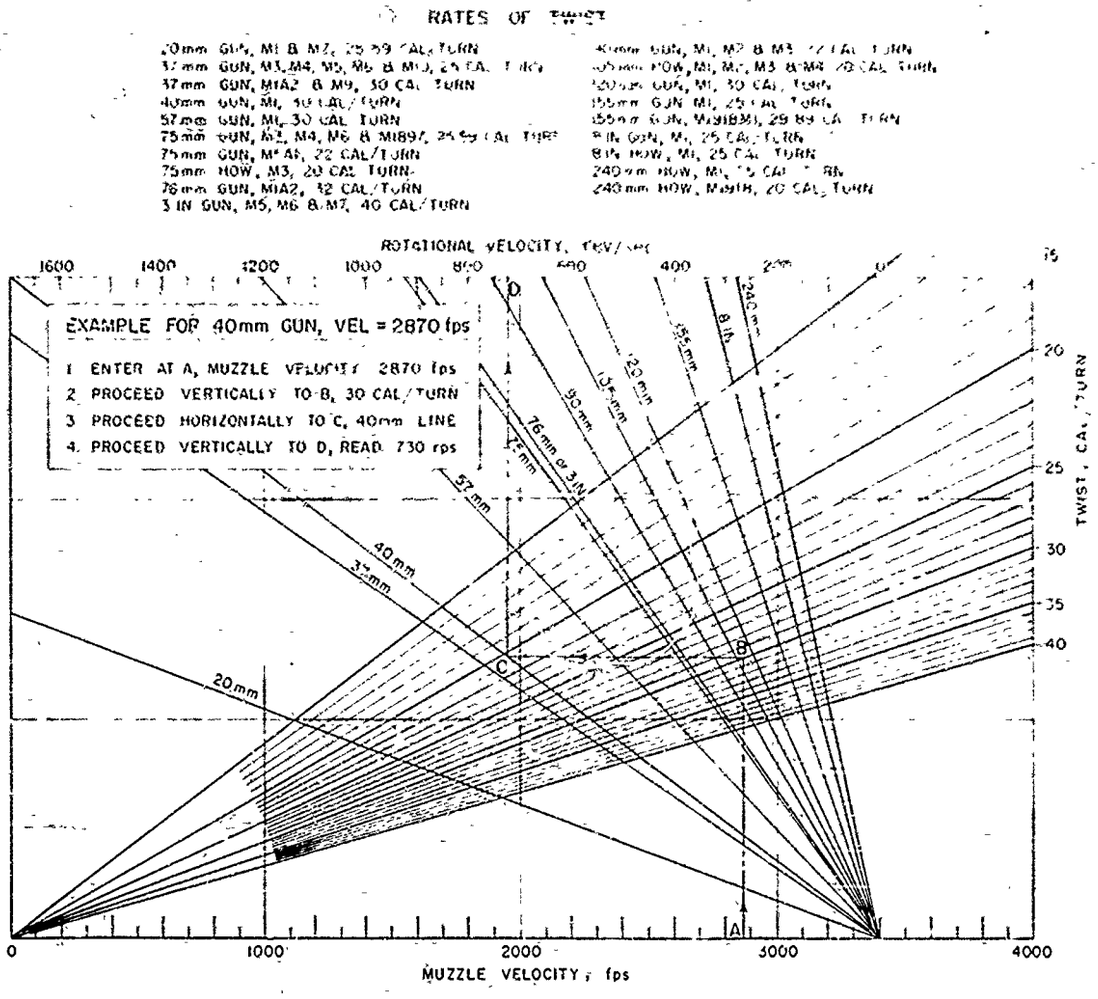

Figure 5-5. Nomogram for Determining Spin Velocity of a Projectile

used for stabilizing those having intermediate velocities.

The spin-stabilized missile is subjected to all of the forces mentioned above. Throughout free flight, the spin of the missile decays, but the rate of decay is so small, in most cases, that for the arming period the designer may treat the spin as constant. Spin decay in flight may be used for self-destruction but it is not usually used for arming the fuze.

Fin-stabilized missiles that are launched with a high initial acceleration are subjected to all of the forces mentioned above except that resulting from spin. These missiles do not spin or, if they do, the spin rate is so small that the forces usually cannot be used.

Grenades propelled by an infantryman's rifle or by a grenade launcher are subjected to a brief, high acceleration followed by a slight deceleration in flight. The acceleration or setback forces are reproducible and large enough to be used for the arming force.

5-3.2.2 Low Acceleration

The second type of ballistic environment for which fuzes may be designed is one in which a rocket carries its own propellant. Since the propellant is consumed during the first portion of the missile's free flight, it may be many seconds, rather than milliseconds, before the missile attains maximum velocity. Therefore, the acceleration is much smaller than that of a gun launched projectile. Fig. 5-2 illustrates this acceleration condition also. There are no especially large setback forces; in fact, forces created by ordinary

vibration and handling may be nearly as large. When the force-time relation in flight is similar to that of handling, integrating rather than differentiating devices are used effectively. These devices prevent the handling forces from arming the fuze (see par. 6-5.4).

5-3.2.3 Gravity Acceleration

Airplane bombs are launched with an acceleration nearly equal to that of gravity. Fig. 5-2 illustrates this as the third ballistic environment. Release from the bomb rack produces a stimulus that is similar in magnitude to ordinary handling stimuli; hence, the designer must resort to a manual or mechanical operation to create a suitable force for arming. He may also utilize aerodynamic or barometric forces created as the bomb falls. In any case, the fuzing problems are very different from those in an artillery projectile.

Hand grenades must be armed manually by removing a safety pin. This action is positive and has the advantage of providing a visual signal that the grenade is armed.

Some fuzes are used in ammunition, such as land mines and boobytraps, that remains stationary until enemy action initiates the explosive. These must be armed by friendly forces. Sea mines and depth charges have automatic arming processes with elaborate triggering devices that require designs similar to arming devices of other ammunition.

5-4 ENVIRONMENTAL ENERGY SOURCES

So many forces of different kinds and different magnitudes act upon a munition, from manufacture to target impact, that fuzes must be designed with special care so as to discriminate among the forces. The fuze must be capable of response to the desired forces and incapable of response to the rest. For example, the action of the arming mechanism may be controlled solely or in combination by any of the following forces: setback due to initial acceleration, centrifugal due to spin, creep due to deceleration, wind due to airflow past the munition, or pressure due to ambient conditions[1].

5-4.1 SETBACK

Setback is the relative rearward movement of component parts in a munition undergoing forward acceleration during launching. The force necessary to accelerate the part together with the munition is balanced by a reaction force. This is called the setback force. It may be calculated by determining the acceleration a of the projectile and multiplying it by the mass m_p of the part affected. Dimensions must be kept consistent.

$$F = m_p a = m_p \frac{PA}{m}, \text{ lb} \qquad (5\text{-}6)$$

If the acceleration a' (Eq. 5-2) is given in g's, one multiplies it by the weight W_p of the part affected

$$F = W_p a' = W_p \frac{PA}{W}, \text{ lb} \qquad (5\text{-}7)$$

Fig. 5-6 shows the propellant force PA and the setback force $W_p \frac{PA}{W}$ on the fuze.

Thus for a 0.0014 lb part undergoing an acceleration of 10,000 g (322,000 ft/sec^2) the force will be

$$F = \frac{0.0014}{32.2} \times 322{,}000 = 14 \text{ lb} \quad \text{or} \qquad (5\text{-}8)$$

$$F = 0.0014 \times 10{,}000 = 14 \text{ lb} \qquad (5\text{-}9)$$

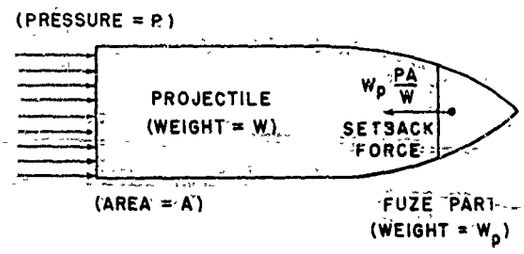

Figure 5-6. Setback Force on a Fuze Part

5-4.2 CREEP

Creep is the tendency for compact parts of a munition to move forward as the munition slows down. This is similar to setback but is much smaller and acts in the opposite direction. The inertial force is calculated by multiplying the weight W_p of the part by the deceleration of the munition, see Fig. 5-7. By use of Eq. 5-3, the creep force on a fuze part is given by

$$F_{cr} = \frac{12 \rho d^2 v^2 K_D W_p}{gW}, \text{ lb} \qquad (5\text{-}10)$$

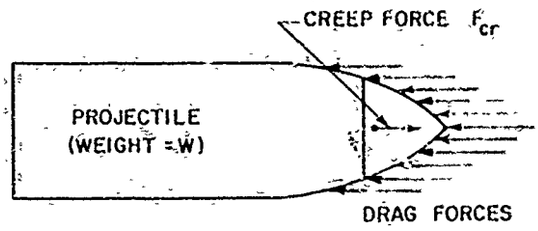

Figure 5-7. Creep Force on a Fuze Part

5-4.3 CENTRIFUGAL FORCE

The most commonly used means of arming a fuze is centrifugal force. Wherever frictional forces are increased during setback, centrifugal arming forces may not prevail until the rotational velocity increases sufficiently or setback ceases to exist. Centrifugal forces are calculated from the equation

$$F_c = \frac{W_p r \omega^2}{g}, \text{ lb} \qquad (5\text{-}11)$$

where r is the radius of the center of gravity of the part from the missile axis, ft (Fig. 5-8).

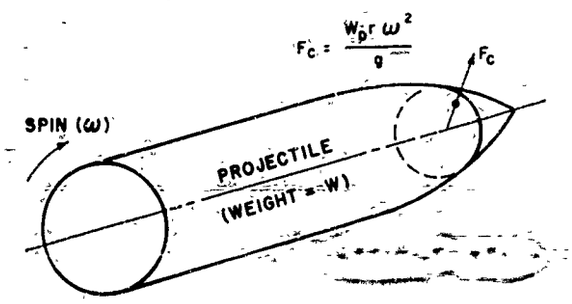

Figure 5-8. Centrifugal Force on a Fuze Part

5-4.4 TANGENTIAL FORCE

Tangential forces may be used in some fuzes. For example, spring-loaded weights move tangentially under the application of angular acceleration. The tangential force is given by

$$F_t = \frac{W_p r}{g} \frac{d\omega}{dt}, \text{ lb} \qquad (5\text{-}12)$$

where $\frac{d\omega}{dt}$ is the angular acceleration. It can be obtained by taking the derivative of Eq. 5-4 with respect to time or $F_t = \frac{W_p}{g} r \frac{12}{nd} \frac{PA}{W}$ since pressure-time curves are generally more available than velocity-time curves.

5-4.5 CORIOLIS FORCE

The Coriolis force is seldom used to operate an arming device, but in certain fuzes its effects may be balanced out to improve fuze operation. It is illustrated in Fig. 5-9 as a force on a ball in a radial slot that rotates at the angular velocity ω. If the ball is not moving relative to the slot, there is no Coriolis force. When the ball moves in the slot, there must be a Coriolis force. A simple explanation is afforded by citing the Coriolis force as that necessary to change the tangential velocity of the ball as its distance from the center of rotation changes. The force F_{co} is calculated by

$$F_{co} = 2vm_p\omega \qquad (5\text{-}13)$$

where v is the radial velocity, ft/sec, of the part of mass m_p, slug, and ω is the angular velocity, rad/sec. The Coriolis force, as shown in Fig. 5-9, is directed perpendicular to the radial motion of the part and in the plane swept out by the radius.

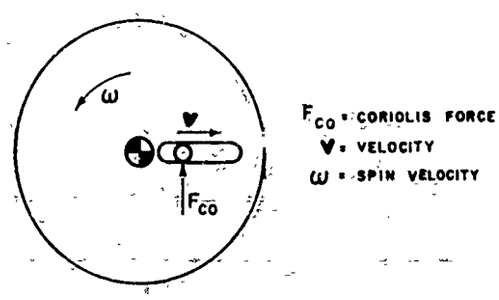

Figure 5-9. Coriolis Force on a Fuze Part

5-4.6 TORQUE

Torque is the product of a force and its lever arm. Usually a torque causes an angular acceleration of a part, and the acceleration is proportional to the torque above that necessary to overcome friction. For fuze parts, torque is associated with three main types of angular acceleration: (1) that experienced by all parts as the munition increases or decreases its spin, (2) that caused by centrifugal effects, and (3) those gyroscopic precessional accelerations present in

all spinning bodies.

Consider the first type. The torque is equal to the product of the moment of inertia and the angular acceleration. If an accelerating torque is transmitted through a small shaft, the effects of inertia are useful for arming devices because the frictional countertorque is small.

The second type is more commonly used. The driving torque is derived from an inertial force acting at the center of mass of the moving part but not acting through its pivot point. The pivot axis may be perpendicular to the spin axis, as in the Semple Centrifugal Plunger shown in Fig. 5-10(A) or parallel to it as in the rotor shutter of Fig. 5-10(B).

The third type is characteristic of all spinning bodies. If the part experiences a torque about any axis other than its spin axis, it will precess, i.e., it will turn about still another axis. The rate and direction of turning may be obtained from the equations concerning the dynamics of rotating bodies. It is readily shown that the part will turn about an axis that is perpendicular to both the spin axis of the munition and the torque direction. If the torque is G, the moment of inertia is I, and the spin is ω, then the precessional angular velocity Ω, both ω and Ω in rad/sec, is

$$\Omega = \frac{G}{I\omega} \tag{5-14}$$

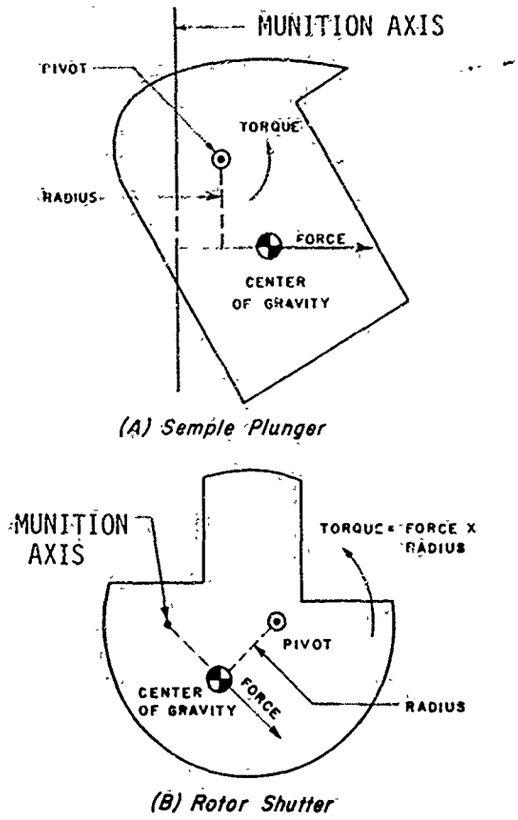

Figure 5-10. Torque on a Fuze Part

5-4.7 FORCES OF THE AIR STREAM

Air forces are used to turn propellers in bombs and rockets. The torque created depends upon the air flow past the propeller blades. The power developed is a function of area, angle of attack, and mean radius of the blades as well as density and velocity of the air stream. Usually an empirical solution is developed from tests in a wind tunnel. Past work has indicated that the power output H_p may be expressed as

$$H_p = C_p \ \rho\omega^2(d_o^5 - d_i^5) \tag{5-15}$$

where C_p is the coefficient of power derived, ρ is the air density, ω is the rotational velocity, and d_o and d_i are the outer and inner diameters of the blade area, respectively.

5-4.8 AMBIENT PRESSURE

Ambient pressure is often used in sea mines and depth charges. It may be used in bombs dropped from aircraft, but the available pressure differences are not as large in air as in the sea. The hydrostatic pressure P_w is given by

$$P_w = \rho_w h \tag{5-16}$$

where ρ_w is the density of the water, 0.037 lb/in^3, and h is the height, in.

5-4.9 OTHER FORCES

Two additional environmental forces affect fuze operation. However, quantitative analyses for their consideration do not yet exist. The first of these is called *setforward*. This is a negative setback—an acceleration in the direction of projectile travel. Setforward occurs when projectiles are rammed into an automatic weapon. Present point-detonating, time, and proximity fuzes will withstand about 1000 g setforward. While weapon designers would like to double or triple the ram velocity, present fuzes cannot

survive this force, except perhaps point-detonating fuzes.

The second of these forces is a *sideways* force. In practice, perfect alignment of a projectile and gun axis prior to firing is not consistently achieved. Therefore, upon firing, the sideways force results as the projectile aligns itself with the gun tube. For example, the 175 mm field gun and the 120 mm tank gun have such high lateral forces that fuze ogives have broken off. Hence, special fuzes had to be provided. These forces have not been measured or calculated to date. In air-gun and drop tests, damage was simulated by accelerations greater than 10,000 g.

5-5 NONENVIRONMENTAL ENERGY SOURCES

When there is no motion of the munition or when the motion is too small to actuate a fuze mechanism, an auxiliary power source must be added. This may be a spring, a battery, or active chemicals.

5-5.1 SPRINGS

A spring is commonly used to operate a device—such as a slider, a detent, or a clockwork—so as to maintain parts in their safe condition prior to arming or to move parts after they are triggered or released. Springs are discussed in par. 6-2.

5-5.2 BATTERIES

The arming process may involve the battery in a mechanical or an electrical way: (1) the power may be used to throw a switch or turn a rotor, or (2) the battery may be activated by bringing the electrolyte into contact with the electrodes or by activation of a thermal battery. Of course, this battery may also be used for the functioning process (see par. 3-4.3).

5-5.3 METASTABLE COMPOUNDS

Active chemicals may be mixed to generate heat. They may also generate gas to expand a bellows so as to move a fuze component. Since this must be accomplished rapidly, explosive chemicals are usually used (see par. 8-3).

Many other principles are in use in fuzes and many more remain to be developed.

REFERENCE

1. Leo Heppner, *Special Study of Setback and Spin for Artillery and Tank Ammunition*, Aberdeen Proving Ground, Md., Final Report DPS-1963, April 1966.

CHAPTER 6
MECHANICAL ARMING DEVICES

6-1 GENERAL

Historically, fuzes have been developed by improving an existing design. Arming devices readily lend themselves to this type of development especially those mechanically, hydraulically, or electrically operated. Fuzes operated by mechanical devices make use of springs, gears, sliders, rotors, and plungers. Some typical mechanisms from among those now used in standard fuzes are described below under their appropriate heading.

6-2 SPRINGS

Springs play an important role in fuzes. When properly designed and manufactured, they provide a convenient source of stored energy which remains constant over the 20-year shelf life required for fuzes. They also act as restrainers for the various parts of a fuze (detents, pins, balls, rotors). The information which follows is a description of the springs normally found in fuzes, the motion of parts with springs attached, and the starting conditions required for spring-held parts.

6-2.1 TYPES OF SPRINGS

There are three general types of springs, all of which are used in fuze arming mechanisms. The *flat leaf spring* is a thin beam which creates tensile and compression stresses when it bends. The *flat spiral spring* is similar to a clock spring, i.e., a leaf spring wound into a spiral. The *helical coil spring* is a wire coil in which a shear stress is induced when the coil is deflected.

The general equation for a spring is an expression of Hooke's law (restoring force proportional to displacement)

$$F = -kx \tag{6-1}$$

where k is the spring constant, x is the displacement from the equilibrium position, and the minus sign is an indication that the force F is in the opposite direction from the displacement. Table 6-1 gives equations for the types of springs mentioned.

The spring constant depends upon the physical properties of the spring material and the geometry of the spring configuration. The former is expressed in the modulus (E or G), and the latter is its coefficient. Standard books of tables contain values of E and G for various materials.

6-2.2 MOTION OF MASSES OF SPRINGS

When unbalanced forces act on a body, differential equations can be written to express its motion. The simplest equation couples a simple force with the acceleration produced. Additional forces can be included such as spring constant, frictional, viscous resistance, setback, and centrifugal forces. These are all treated in an elementary fashion with solutions to equations stated as simply as possible.

6-2.2.1 Elementary Spring Equations

When a mass is supported and moved horizontally by an attached spring, the force diagram is as indicated in Fig. 6-1 where the spring is under an initial compression equal to x_o. Following Newton's second law,

$$F = m\ddot{x} \tag{6-2}$$

where $\ddot{x}$ is the acceleration in the x direction and m the mass of the body. When the spring is compressed, there is a displacement x. When measuring x from the equilibrium position,

$$m\ddot{x} = -kx \tag{6-3}$$

By means of standard methods, the general solution of Eq. 6-3 is

$$x = B \sin \sqrt{\frac{k}{m}}\, t + C \cos \sqrt{\frac{k}{m}}\, t \tag{6-4}$$

where t is the time from the release of the body, and the arbitrary constants B and C are evaluated to fit the boundary conditions. At $t = 0$ (the

TABLE 6-1. SPRING EQUATIONS

Type	*Sample Equations*	*Spring Constant*
General Spring	$F = -kx$	k
Flat Leaf (Center load, two end supports)	$F = -\frac{48\ EI_A}{l^3}\ x$	$\frac{48\ EI_A}{l^3}$
Flat Leaf (Center Moment two end supports)	$G = -\frac{12\ EI_A}{l}\ \theta$	$\frac{12\ EI_A}{l}$
Round Bar (Axial Moment)	$G = -\frac{864\pi r^4 G'}{l}\ \theta$	$\frac{864\pi r^4 G'}{l}$
Spiral Leaf (Torsional)	$G = -\frac{Eht_s^3}{12l}\ \theta$	$\frac{Eht_s^3}{12l}$
Helical	$F = -\frac{G'd_w^4}{8Nd^3}\ x$	$\frac{G'd_w^4}{8Nd^3}$

E = Young's modulus, psi
G' = shear modulus, psi
I_A = area moment, in.^{4}
l = length of spring, in.
F = force, lb
h = height of spring, in.
t_s = thickness of spring, in.
r = radius of round bar, in.
N = number of active coils
d = mean diameter of coil, in.
d_w = diameter of wire, in.
θ = deflection angle, rad.
G = torque, in.-lb
k = spring constant, lb/in.
x = displacement, in.

start); $x = x_o$ which requires that $B = 0$ and $C = x_o$. Eq. 6-4 becomes

$$x = x_o \cos \sqrt{\frac{k}{m}}\, t \qquad (6\text{-}5)$$

At assembly, most fuze springs are given an initial displacement denoted by x_o.

When a constant force Q is exerted on the mass (independent of displacement and time), the equation of motion is

$$m\ddot{x} + kx = Q \qquad (6\text{-}6)$$

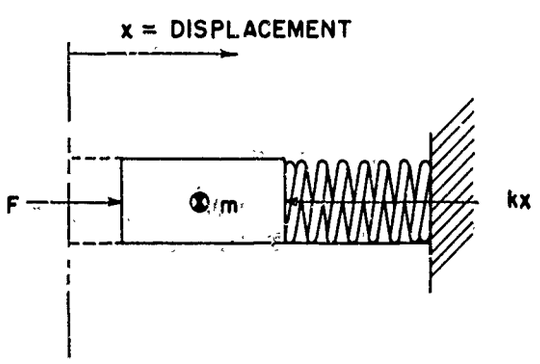

Figure 6-1. Basic Mass and Spring System

and the solution for x becomes

$$x = x_o \cos \sqrt{\frac{k}{m}}\, t + \frac{Q}{k}\left(1 - \cos \sqrt{\frac{k}{m}}\, t\right) \qquad (6\text{-}7)$$

This represents an oscillation about a new rest point Q/k. If the setback acceleration on a projectile is constant, Q in Eq. 6-6 equals $W_p a'$.

If it is assumed that a cyclic motion is possible, Q (being unidirectional) is a driving force for one half of the cycle and a resisting force for the other half. If Q is to be a resistance force for both halves of the cycle (not unidirectional), the equation must be written

$$m\ddot{x} + kx = \pm Q \qquad (6\text{-}8)$$

and the solution becomes

$$x = x_o \cos \sqrt{\frac{k}{m}}\, t \pm \frac{Q}{k}\left(1 - \cos \sqrt{\frac{k}{m}}\, t\right) \qquad (6\text{-}9)$$

where the proper sign, + or − is chosen.

Fig. 6-2(A) shows the displacement x (Eq. 6-5) as the projection on the vertical axis of a point traveling on the circle[1]. Fig. 6-2(B) is the same as 6-2(A) except that the center of the circle has been displaced a distance Q/k in the positive direction. In fact, all displacements of point

A have been raised by the amount Q/k.

Fig. 6-2(C) shows the displacement of the point when Eq. 6-9 is used. For the first and third half cycles the displacements are projections from the circles drawn with their center at Q/k; for the second half cycle the displacements are projections from the circle drawn with its center at $-Q/k$. Since the circles must match at B and D, the radii gradually decrease until at F a circle cannot be drawn as a continuation with its center at $-Q/k$. This illustrates the effect of frictional forces acting against the motion. At F, the resisting force $-Q/k$ is greater than the spring force, which means that the body stops moving. This is a frictional type force that always opposes the motion.

Sometimes the mass m moves through a fluid. In this case a term representing the viscous resistance should be added to Eq. 6-3

$$m\ddot{x} = -kx - p\dot{x} \tag{6-10}$$

where $\dot{x}$ is the velocity and $p\dot{x}$ is the damping force of the surrounding medium proportional to the velocity. The solution to this equation is

$$x = e^{-\left(\frac{pt}{2m}\right)}\left(\frac{px_o}{2m\beta}\sin\beta t + x_o\cos\beta t\right) \tag{6-11}$$

where β is

$$\sqrt{\frac{k}{m} - \frac{p^2}{4m^2}}$$

This is a truly damped oscillation, whereas that expressed by Eq. 6-9 represents an oscillation with stepped damping.

6-2.2.2 Examples of Friction

At times the compressed spring moves a body in spite of small frictional forces. However, for motion perpendicular to the munition axis, the frictional forces caused by setback are large enough to prevent motion. For example, Fig. 6-3 shows a mass undergoing an accelerating force such as setback. W_p is the weight of the moving part and a' is the imposed acceleration expressed in g (Eq. 5-2). The force of friction is given by $\mu W_p a' + f$ where μ is the coefficient of friction and f is the friction of the side walls. In the case of a nonrotating fuze the equation is

$$m\ddot{x} + kx = F_r - (f + \mu W_p a') \tag{6-12}$$

where F_r is the restraining force that disappears when the mass moves. In fired projectiles, a' is a function of the time after firing, say $g(t)$. Eq. 6-12 then becomes

$$m\ddot{x} + kx = -\left[f + \mu W_p g(t)\right] \tag{6-13}$$

which cannot be solved without knowing $g(t)$.

Setback accelerations vary with time; however, the deceleration of the munition caused by

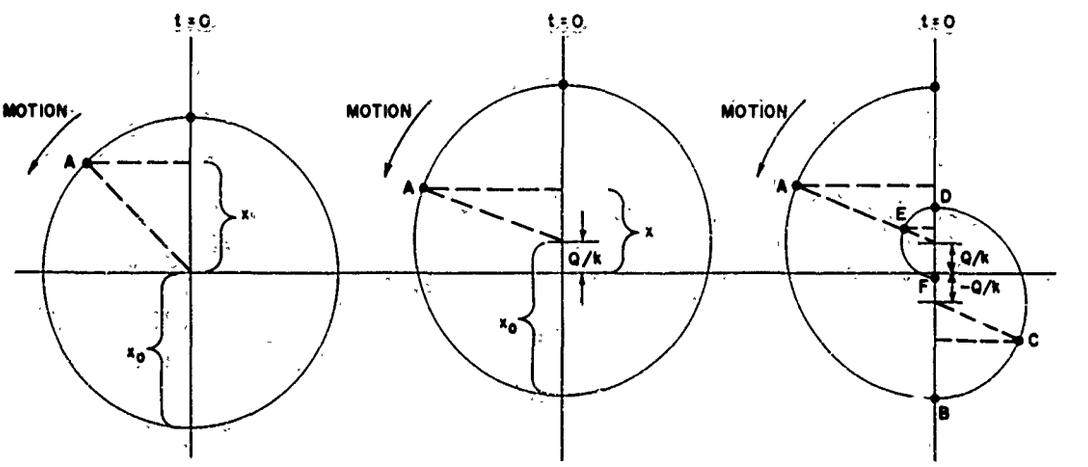

$x = x_0 \cos\sqrt{k/m}\, t$ (A)

$x = x_0 \cos\sqrt{k/m}\, t + Q/k\,(1 - \cos\sqrt{k/m}\, t)$ (B)

$x = x_0 \cos\sqrt{k/m}\, t \pm Q/k\,(1 - \cos\sqrt{k/m}\, t)$ (C)

Figure 6-2. Projection of Spring Motion

air drag is nearly constant. Hence, the decelerating forces on the body can be assumed constant and equal to $W_p a'$. Then, kx is chosen large enough to move the body when these frictional forces caused by the drag are present. Eq. 6-12 can be solved for x as

$$x = x_a \cos\sqrt{\frac{k}{m}}\, t - \frac{f + \mu W_p a'}{k}\left(1 - \cos\sqrt{\frac{k}{m}}\, t\right) \quad (6\text{-}14)$$

and the time to move a distance S is obtained by solving Eq. 6-14 for t as

$$t = \sqrt{\frac{m}{k}}\cos^{-1}\left(\frac{kS + f + \mu W_p a'}{kx_a + f + \mu W_p a'}\right) \quad (6\text{-}15)$$

Fuze, M525 (Fig. 1-6) contains a spring-loaded component that moves under two conditions: (1) when the setback acceleration is small enough to allow transverse motion in the gun tube, and (2) when the drag forces are constant in the air. The problem is solved by a step process with boundary conditions (velocity, position, and time) matched at the common point. The following is a sample sequence.

Condition (1):

(a) Suppose the restraining force F_r to be removed. The compressed spring will accelerate the mass to the left (Fig. 6-3). The friction force will be reversed and resist the motion. By using the static coefficient of friction for μ, the value of a' can be determined for which the mass will move to the left with the equation

$$m\ddot{x} = -kx + (f + \mu W_p a') \quad (6\text{-}16)$$

(b) In Condition (1) the projectile is still within the gun tube undergoing a forward acceleration a' that is decreasing. As the acceleration falls, the value obtained in Eq. 6-16 will be reached and the mass will move, and the time interval during which the acceleration is present can be found from gun data. Eq. 6-16 is solved like Eq. 6-12 to give Eq. 6-14 so that the distance the mass will move can be determined and called S_1.

Condition (2):

(a) After the projectile leaves the gun tube, it is acted on by a drag force and the parts experience a creep acceleration. From (b) in Condition (1) the remaining distance which the mass must move to complete its part in the arming sequence can be determined.

(b) Using an equation similar to 6-15 but having the plus signs replaced by minus signs, the time to arm can be determined.

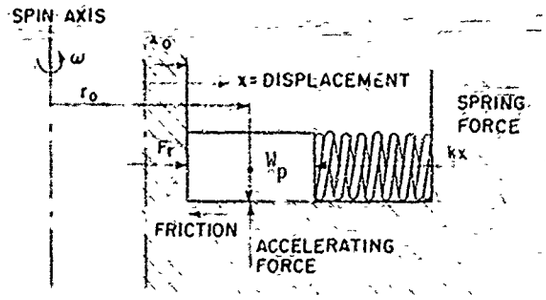

Figure 6-3. Mass and Spring Under Acceleration

This last calculation gives the time after launching for the mass to reach its appointed position.

6-2.2.3 Effect of Centrifugal Force

Centrifugal forces caused by projectile rotation are effective in moving sliding masses perpendicular to the spin axis of the projectile. The force is computed as the product of the mass of the body, the distance from its center of gravity to the axis of rotation, and the square of its angular velocity in rad/sec.

Suppose, as in Fuze, M48A3, the centrifugal force is opposed by a spring. The equation of motion is (see Fig. 6-3)

$$m\ddot{x} = -kx + m\omega^2 (x + r_o) - f \quad (6\text{-}17)$$

where ω is the spin of the projectile in rad/sec and r_o is the radius of the center of mass of the body from the spin axis when the displacement is zero. With an initial displacement x_o the equation for the displacement at any later time is

$$x = \left(r_o - \frac{m\omega^2 r_o - f}{k - m\omega^2}\right)\cos\sqrt{\frac{k}{m} - \omega^2}\, t + \frac{m\omega^2 r_o - f}{k - m\omega^2} \quad (6\text{-}18)$$

and the time to move a given distance S is

$$t = \sqrt{\frac{1}{\frac{k}{m} - \omega^2}}\cos^{-1}\left(\frac{kS - m\omega^2 S - m\omega^2 r_o + f}{kx_o - m\omega^2 x_o - m\omega^2 r_o + f}\right) \quad (6\text{-}19)$$

In some instances, the interrupter is made of two parts which separate as they move. An example is the slider of Fuze, M48A3. In this case, the inner part is not always under the influence

of the spring. Its motion then must be studied under two conditions: Eq. 6-17 and the following

$$m\ddot{x} = m\omega^2 (x + r_o) - f \qquad (6\text{-}20)$$

The solution of Eq. 6-20 is

$$t = \frac{1}{\omega_n}\cosh^{-1}\left(\frac{-m\omega^2 x + f - m\omega^2 r_o}{-m\omega^2 x_o + f - m\omega^2 r_o}\right) \qquad (6\text{-}21)$$

The total time for the inner part to move is the sum of Eqs. 6-19 and 6-21. In Eq. 6-19, S is the distance the inner part moves while the spring force is acting on it. In Eq. 6-18, x_o is equal to S, and x is the total distance the part must move.

6-2.3 SPRINGS USED IN FUZES

The design of coil springs is covered above. Fig. 6-4 illustrates the method of specifying coil springs used in compression. Diameters, length, type of ends, and wind must be specified as well as material and any special features[2]. Examples of such features in fuze design are level of impact sensitivity (maximum is frequently specified), required functioning time, and rain sensitivity.

The Belleville spring is a special spring in the shape of a conical washer that snaps from one stable position to another when the proper force is applied. The spring's equations are given and its application is illustrated for use in a mine in par. 13-2.2. In addition, fuzes make use of power springs, hairsprings, and constant-force springs. Design formulas are given below. Materials and factors affecting spring life—such as wear and stress—must also be considered[2,3].

6-2.3.1 Power Springs

Power springs, also called mainsprings, are flat spiral springs used to drive clockworks. The springs are usually contained inside a hollow case to which one end of the spring is attached; the other end is attached to the arbor as shown in Fig. 6-5. It has been determined experimentally that a maximum number of turns is delivered when the wound spring occupies about half the volume available between arbor and case. Under this condition, the length of the spring l is

$$l = \frac{d_i^2 - d_o^2}{2.5\, t_s}, \text{ in.} \qquad (6\text{-}22^*)$$

where d_i is the inside diameter of the case, d_o is the outside diameter of the arbor, and t_s is the spring thickness; all dimensions are in inches.

The number of turns N delivered is

$$N = \frac{4\,l}{\pi U} \qquad (6\text{-}23^*)$$

where

$$U = \frac{d_i^2 - d_o^2}{\sqrt{2\,(d_i^2 + d_o^2)} - (d_i + d_o)} \qquad (6\text{-}24^*)$$

6-2.3.2 Hairsprings

Classicially, a hairspring is a special spiral spring. It differs from a power spring by two major factors: (1) there is a space between the coils, and (2) the spring is small. The number of coils is usually large and the outside end is clamped. The number of turns N produced by a moment M is given by

$$N = \frac{6\,Ml}{\pi E b t_s^3} \qquad (6\text{-}25^*)$$

where b is the width of the spring, in.; E is the modulus of elasticity, psi; M is the applied moment, in.-lb, t_s is the spring thickness, in.; and l is the active length of the spring, in.

The hairspring regulates the mass system of the escapement. Because of the various forces acting on artillery projectiles, spiral springs are not suitable. Rather, the escapement has been regulated with straight springs deflected by bending or torsion. A typical example is shown in the Junghans escapement, Fig. 6-26. These springs are designed with the formulas of Table 6-1 (see also par. 6-6.3.3).

6-2.3.3 Constant-force Springs

Constant-force, also called negator, springs are spiral springs so wound that a constant force causes a continuous unwinding of the coils. They are made by forming a spring of flat stock to a tight radius, the coils touching one another. The

*From *Mechanical Springs* by A. M. Wahl, Copyright 1963. Used by permission of McGraw Hill Book Company, Inc.

TYPE OF ENDS

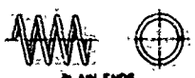

PLAIN ENDS
WOUND RIGHT HAND

SQUARED ENDS
WOUND RIGHT HAND

DESIGN DATA

TYPE OF ENDS	SOLID HEIGHT	ACTIVE COILS	TOTAL COILS
PLAIN	d x n + d	n	n + 2
GROUND	d x n	n	n
SQUARED	d x n + d	n - 2	n
SQUARED & GROUND	d x n	n - 2	n

d = DIAMETER OF WIRE PLUS TOLERANCE.
n = NUMBER OF COILS

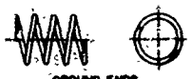

GROUND ENDS
WOUND LEFT HAND

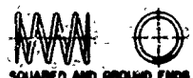

SQUARED AND GROUND ENDS
WOUND LEFT HAND

METHOD OF SPECIFYING COMPRESSION SPRINGS

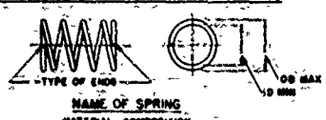

NAME OF SPRING
MATERIAL, COMPOSITION
(WHEN REQUIRED, PLATING TO APPEAR IN NOTES UNDER LIST OF PARTS)

SPECIFY AS "REQUIREMENTS"

A - MAXIMUM PERMITTED SOLID HEIGHT.
B - DIRECTION OF WINDING (a)
C - SEASON THOROUGHLY AFTER WINDING.
D - TREAT, TO REMOVE EMBRITTLEMENT, WITHIN 24 HOURS AFTER PLATING. (b)
E - LOAD WITH TOLERANCE AT A GIVEN HEIGHT, WHICH HEIGHT SHOULD BE AS NEAR THE SOLID HEIGHT OF THE SPRING AS POSSIBLE WITHOUT ACTUALLY GIVING A SET TO THE SPRING (c)
F - LOAD WITH TOLERANCE AT ASSEMBLED HEIGHT. (A STATEMENT SHALL BE MADE THAT OCCASIONAL CHECK WILL BE MADE AFTER COMPRESSION FOR AT LEAST 24 HOURS AT THE ASSEMBLED HEIGHT). (c)
G - LOADS APPLY AFTER SEASONING, PLATING AND TREATMENT TO REMOVE EMBRITTLEMENT. (d)

(a) - NOTE "D" TO BE WRITTEN, WHEN DIRECTION OF WINDING IS NOT IMPORTANT (WHEN DIRECTION OF WINDING IS NOT SPECIFIED, SPRING SHALL BE WOUND WOUND RIGHT HAND)
(b) - NOTE "D" TO BE WRITTEN, WHEN CONDITIONS REQUIRING THIS IS SPECIFIED.
(c) - NOTE "E" TO BE WRITTEN AND NOTE "F" TO BE ADDED WHEN LOADS LIMITS SPECIFIED.
(d) - WHEN SEASONING RESISTANT WIRE IS SPECIFIED NOTE "G" SHALL ALSO "LOADS APPLY AFTER SEASONING."

SPECIFY AS "ADVISORY DATA (MAY BE VARIED TO MEET REQUIREMENTS)"

A - DIAMETER OF WIRE.
B - TOTAL NUMBER OF COILS.
C - NUMBER OF ACTIVE COILS.
D - SUGGESTED TRIAL FREE HEIGHT THAT MAY BE ADJUSTED TO MEET LOAD REQUIREMENTS.
E - SEASONING TEMPERATURE AND TIME TO BE IN ACCORDANCE WITH WIRE SPECIFICATION.
F - METHOD USED FOR REMOVING EMBRITTLEMENT.

EXAMPLES OF ABOVE METHOD OF SPECIFYING SPRINGS

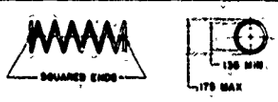

SPRING, PIN LOCK
STEEL, WIRE, COMP A

REQUIREMENTS

A - SOLID HEIGHT = .115 MAX.
B - WIND LEFT HAND.
C - SEASON THOROUGHLY AFTER WINDING.
D - TREAT, TO REMOVE EMBRITTLEMENT, WITHIN 24 HOURS AFTER PLATING.
E - LOAD AT .100 INCH = 50 OUNCES MAX.
F - LOAD AT ASSEMBLED HEIGHT, .34 INCH = 8.5 OUNCES MIN (OCCASIONAL CHECK WILL BE MADE AFTER COMPRESSION FOR AT LEAST 24 HOURS, AT THE ASSEMBLED HEIGHT).
G - LOADS APPLY AFTER SEASONING, PLATING AND TREATMENT TO REMOVE EMBRITTLEMENT.

ADVISORY DATA (MAY BE VARIED TO MEET REQUIREMENTS)

A - DIAMETER OF WIRE = .014 INCH.
B - TOTAL NUMBER OF COILS = 7
C - NUMBER OF ACTIVE COILS = 5
D - ADJUST FREE HEIGHT TO MEET LOAD REQUIREMENTS. SUGGESTED TRIAL FREE HEIGHT = .63 INCH.
E - SEASON BY HEATING TO 500° - 600° F FOR 6 MINUTES.
F - TO REMOVE EMBRITTLEMENT, HEAT TO 300° F FOR AT LEAST 30 MINUTES AS SOON AFTER PLATING AS PRACTICABLE.

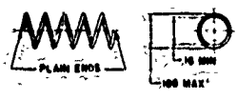

SPRING, CENTRIFUGAL PIN
STEEL, WIRE, COMP A

REQUIREMENTS

A - SOLID HEIGHT = .06 MAX.
B - WIND LEFT HAND
C - SEASON THOROUGHLY AFTER WINDING.
D - TREAT, TO REMOVE EMBRITTLEMENT, WITHIN 24 HOURS AFTER PLATING
E - MUST MEET ARMING LIMITS OF PLUNGER CENTRIFUGAL PIN AS SPECIFIED UNDER DELAY PLUNGER ASSEMBLY (OCCASIONAL CHECK WILL BE MADE, AFTER COMPRESSION FOR AT LEAST 24 HOURS, AT THE ASSEMBLED HEIGHT).

ADVISORY DATA (MAY BE VARIED TO MEET REQUIREMENTS)

A - DIAMETER OF WIRE = .008 INCH.
B - TOTAL NUMBER OF COILS = 9
C - NUMBER OF ACTIVE COILS = 8
D - ADJUST FREE HEIGHT TO MEET LOAD AT 1 INCH. SUGGESTED TRIAL FREE HEIGHT = .305 INCH.
E - LOAD AT 1 INCH = 487 GRAMS.
F - LOAD APPLIES AFTER SEASONING, PLATING AND TREATMENT TO REMOVE EMBRITTLEMENT.
G - SEASON BY HEATING TO 500° - 600° F FOR 5 MINUTES.
H - TO REMOVE EMBRITTLEMENT, HEAT TO 300° F FOR AT LEAST 30 MINUTES AS SOON AFTER PLATING AS PRACTICABLE.

Figure 6-4. Compression Spring Data

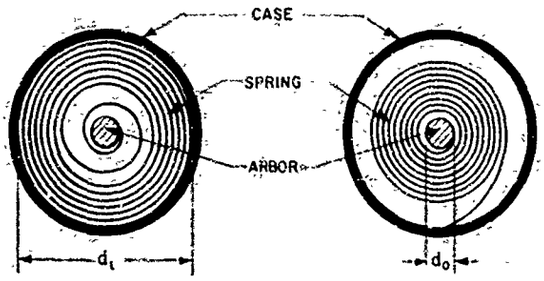

Figure 6-5. Typical Cased Power Spring

spring is placed over an arbor of diameter slightly greater than the free inside diameter of the unstressed spring.

When a force F is applied in a radial direction from the axis, the spiral uncurls as shown in Fig. 6-6, the load being practically independent of deflection. The magnitude of the force F is

$$F = \frac{E t_s^3 b}{26.4} \left[\frac{1}{r_n^2} - \left(\frac{1}{r_n} - \frac{1}{r_1} \right)^2 \right], \text{ lb} \qquad (6\text{-}26)$$

where r_n is the minimum natural (free position unmounted) radius of curvature of the coil, and r_1 is the outer radius of coil, both in inches.

Design formulas for constant-force springs are given in Table 6-2[4]. The stress factor S_f used in the equations depends upon the material used and the anticipated spring life. For high-carbon steel at less than 5000 cycles, a value of 0.02 is suggested. In the table, x is the deflection required in inches, and E is the modulus in psi. The other symbols are defined above.

6-3 SLIDERS

Many fuze components, such as interrupters and lock-pins, move without the aid of roller or ball bearings. Since substantial forces are available for sliding motion in spite of friction, components called sliders can be incorporated in fuze design. Also, large tolerances can be allowed in order to reduce the cost of manufacture.

Sliders are moved by springs and inertial forces such as setback, creep, or centrifugal forces. Sliders may be designed to travel along, normal to, or at an angle with the munition axis. They are usually held in their initial position by springs.

TABLE 6-2. DESIGN FORMULAS FOR CONSTANT-FORCE SPRINGS

Variable, in.	*Springs With 10 Coils or Less*	*Springs With Over 10 Coils*
Spring width	$b = \frac{26.4F}{Et_sS_f^2}$	$b = \frac{26.4F}{Et_sS_f^2}$
Minimum natural radius of curvature	$r_n = \sqrt{\frac{Ebt_s^3}{26.4F}}$	$r_n = \frac{r_n}{1.2}$
Maximum natural radius of curvature	—	$r_n = \sqrt{\frac{Ebt_s^3}{26.4F}}$
Spring thickness	$t_s \geq \frac{26.4F}{EbS_f^2}$	$t_s \geq \frac{26.4F}{EbS_f^2}$
Arbor radius	$r_2 = 1.2r_n$	$r_2 = 1.2r_n$
Spring length	$L = \delta + 10r_2$	$L = \delta + 10r_2$

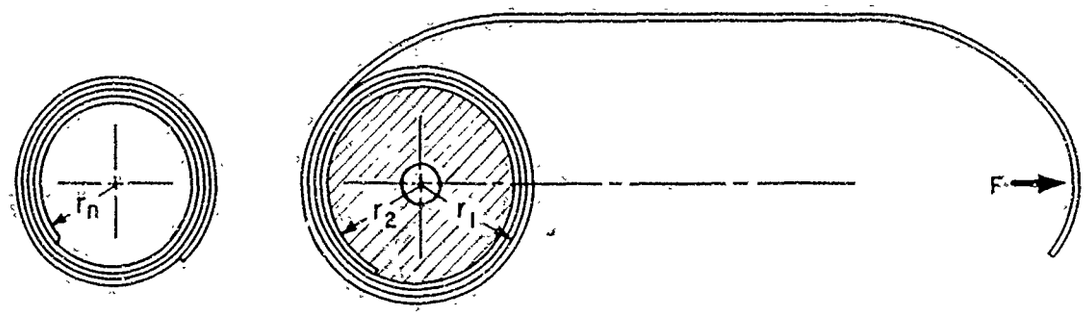

(A) Free Position Unmounted

(B) Operating Position Mounted On Roller

Figure 6-6. Negator Spring

6-3.1 AXIAL MOTION OF SPRING-DRIVEN SLIDERS

Components designed to move along the direction of motion of a munition are constrained by springs and moved by inertial forces. That is, in an impact device a spring holds the part until impact occurs; then that part continues its own motion by sliding within the munition according to Newton's law on conservation of momentum. Hence, there is relative motion between components according to the equation

$$m\ddot{x} + kx = W_p a' - f \qquad (6\text{-}27)$$

Under setback or impact conditions, the frictional forces are much smaller than the inertial force $W_p a'$ and may be neglected. The time of action may be obtained from Eq. 6-7 where $Q = W_p a' - f$.

However, under drag or air resistance forces where the deceleration is constant, the solution to Eq. 6-27 becomes

$$t = \sqrt{\frac{m}{k}} \cos^{-1}\left(\frac{kS - W_p a' + f}{kx_o - W_p a' + f}\right). \qquad (6\text{-}28)$$

In this case, x_o is measured in the direction of motion and denotes the amount of compression of the spring.

6-3.2 TRANSVERSE MOTION OF SPRING-DRIVEN SLIDERS

Components designed to move in a direction perpendicular to or with a component perpendicular to the direction of motion of a munition may be driven either by springs or by centrifugal forces. Usually the sliders are held in their initial position by a lock pin which is removed as part of the arming process, and Eq. 6-17 applies. The situation may easily become that of two separate conditions with the time to act given by the sum of Eqs. 6-19 and 6-21.

6-3.3 TRANSVERSE MOTION OF CENTRIFUGALLY DRIVEN SLIDERS

The motion of the slider under centrifugal forces is given by Eqs. 6-17 and 6-20. However, if the slider is at an angle other than 90° to the spin axis, setback and creep forces will also influence the motion directly. This occurs because these forces have a component in the direction of motion of the part.

Fig. 6-7 shows the centrifugally operated slider in which $-kx$ is the spring force and F is the normal force (reaction) of the restraining wall (F disappears when the slider is not touching the wall). F_c is the inertial force equivalent to the centrifugal force $m\omega^2 r$ where r is the radius of the center of mass of the slider from the spin axis.

Let a' equal the acceleration of the slider in the direction of the munition spin axis. Then by assuming a force F necessary to provide this acceleration, the forces are resolved in the X direction (slide motion direction) and the Y direction. Upon combining these two equations, one obtains

$$m\ddot{x} + kx - m\omega^2 x(\cos^2\phi - \mu\cos\phi\sin\phi) - Wa'(\sin\phi + \mu\cos\phi) - m\omega^2 x_o(\cos^2\phi - \mu\cos\phi\sin\phi) + m\omega^2 r_o(\cos\phi - \mu\sin\phi) \qquad (6\text{-}29)$$

where ϕ is the slide angle. This equation is examined to determine ω and a' at which $\ddot{x}$ becomes positive; this is the condition under which the slider will move. This equation is of the same form as Eq. 6-12. Hence, the time to move the distance S is

$$t = \sqrt{\frac{m}{k - m\omega^2(\cos^2\phi - \cos\phi\sin\phi)}}\cos^{-1}\left[\frac{kS + Wa'(\sin\phi + \mu\cos\phi) + m\omega^2 x_o(\cos^2\phi - \mu\cos\phi\sin\phi) - m\omega^2 r_o(\cos\phi - \mu\sin\phi) - m\omega^2 S(\cos^2\phi - \mu\cos\phi\sin\phi)}{kx_o + Wa'(\sin\phi + \mu\cos\phi) - m\omega^2 r_o(\cos\phi - \mu\sin\phi)}\right] \quad (6\text{-}30)$$

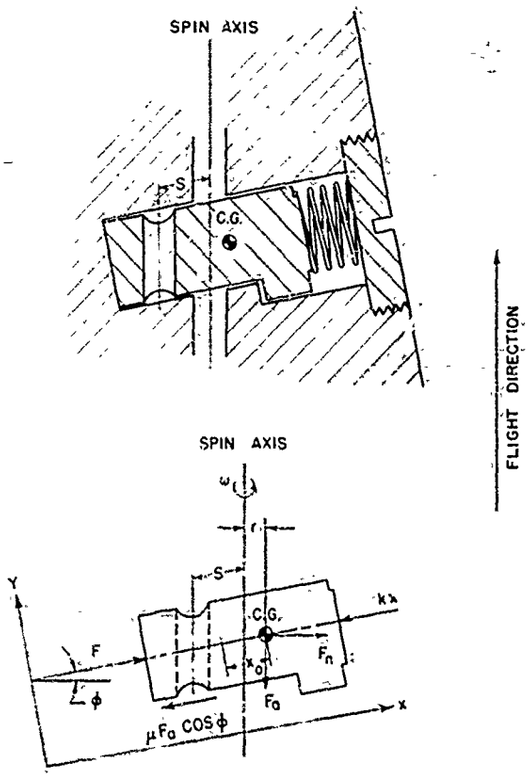

Figure 6-7. Slider at an Angle

6-4 MINOR MECHANICAL PARTS

The family of minor mechanical parts used in fuzes includes shear pins, hinge pins, links, detents, knobs, screws, trip levers, pivots, bearings, etc. Each one serves a distinct purpose and may be designed from basic principles. No complicated formulas are required; in fact, many handbooks contain tables of data or nomographs for the designer's use[5,6].

6-4.1 PINS, DETENTS, AND LINKS

A shear pin may be intended to be broken only when the missile strikes the target; hence, the pin is designed to withstand impacts resulting from normal handling shocks. The pin can be sheared when an inertia weight W strikes it exerting a force Wa' that produces a shear stress

$$\tau = \frac{Wa'}{2A}, \text{ psi} \quad (6\text{-}31)$$

A is the pin cross-sectional area in in.^{2}, and the 2 is required if the pin is in double shear (supported on two sides). The area of the pin may be found for any deceleration a' by using the ultimate shear strength, say 75,000 psi.

Hinge pins (Fig. 6-8) are slightly different in that a larger clearance is necessary for the mating parts to move. Bending of the pin then occurs which reduces the allowable shear stress. A maximum bending moment is computed by assuming that the whole load is concentrated at the middle of the pin and that the pin is freely supported at the middle of each clevis arm.

The shear stress τ will be

$$\tau = \frac{F}{2A}, \text{ psi} \quad (6\text{-}32)$$

where F is the force being transmitted. The bending moment M will be

$$M = \frac{F}{2}\left(w_c + \frac{w_e}{2} + l_c\right), \text{ in.-lb} \quad (6\text{-}33)$$

where w_c is the width of each clevis eye, w_e is the width of the eye, and l_c is the clearance; all dimensions in inches. The maximum fiber stress σ from the bending moment is (tension on one side compression on the other)

$$\sigma = \frac{M\frac{d_p}{2}}{I_A}, \text{ psi} \quad (6\text{-}34)$$

where d_p is the pin diameter in in. and I_A is its second moment of area ($\pi d_p^4/64$ for a circle). Therefore by substituting Eq. 6-33 for M in Eq.

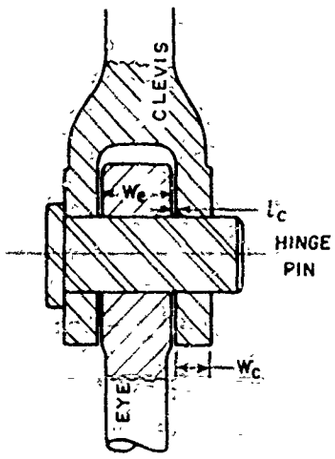

(A) Assembly

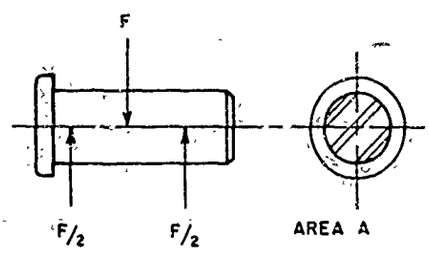

(B) Forces on Hinge Pin

Figure 6-8. Hinge Pin

6-34, the stress caused by bending is found to be

$$\sigma = \frac{16F}{\pi d_p^3}\left(w_c + \frac{w_e}{2} + l_c\right), \text{ psi} \qquad (6\text{-}35)$$

Both stresses τ and σ must be less than the ultimate strength of the pin for it to be safe.

Linkages are bulky, and are not used often because space is limited in fuzes. Since links are long slender members that are primarily adapted to transmitting motion in one plane, neither they nor their joints resist lateral forces well. They tend to wobble and bind. Setback and centrifugal forces are nearly always at right angles to each other; hence, linkages are not desirable in fuzes for use in spin-stabilized projectiles. They are better suited to stationary or low velocity munitions.

Detents are short rods with a length to diameter ratio of 2:1 or 3:1. Their purpose is to restrict motion by exerting their shear strength. The shear stress is computed by Eq. 6-32 where F is the whole load. The motion of the detents is complicated if they are allowed to become skewed; i.e., they twist and jam if the clearance is too large or if the length in the guide is too short. With a short rod, large clearance, and sharp corners, friction is increased because the load is concentrated at the bearing areas so that there is a tendency to gall or gouge the detent. Fig. 6-9 illustrates this general problem.

6-4.2 KNOBS, LEVERS, AND PIVOTS

Knobs are used to select or set fuze function. Normal knob design can be applied because the

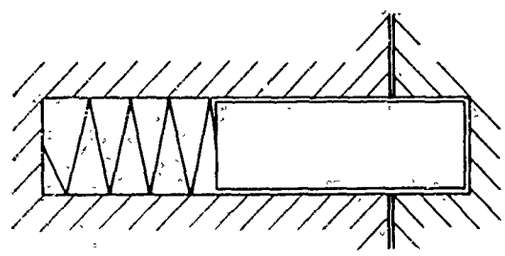

(A) Minimum Clearance - Adequate Length

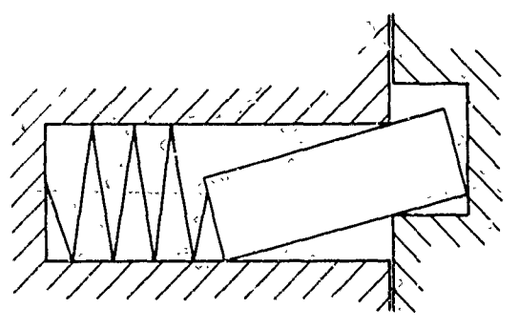

(B) Large Clearance - Adequate Length

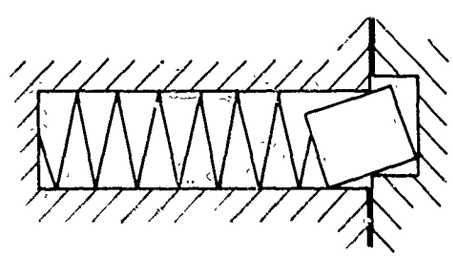

(C) Excessive Clearance - Short Length

Figure 6-9. Detent Actions

only conflicting torque arises during angular setback. In that instance, the frictional torque must exceed the setback torque. By designing the part so that linear setback will increase the friction (the knob bearing surface has a component perpendicular to the spin axis), the effects of the setback torque may be defeated.

A trip lever restricts the motion of another part by a locking action. Fig. 6-10(A) illustrates a positive lock in which any opening torque is balanced by a definite closing torque. Fig. 6-10(B) shows a sensitive brake in which the opening torque present is balanced by a closing torque that depends upon friction. These are sensitive to small motions by the driving force because a sliding action once started will continue. The kinetic coefficient of friction μ_k is less than the static coefficient μ_s which means that the part starts to move when $\mu_s Fr < G_s$ in the equation

$$G_s - \mu_s Fr = I\ddot{\theta}, \text{ in.-lb} \qquad (6\text{-}36)$$

where G_s is the spring torque and r is the friction radius, in in. (see Fig. 6-10(B)). At the instant when μ_s drops to μ_k, the angular acceleration $\ddot{\theta}$ increases with a jump.

Another trip lever is operated by an inertia type all-way switch for graze action. Fig. 6-11 shows how an inertia ring will move a trigger plate regardless of the direction of the force on

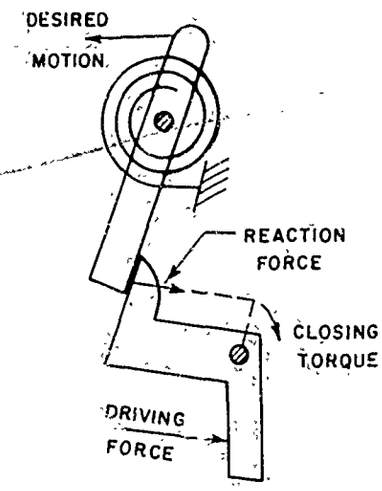

(A) Positive Lock

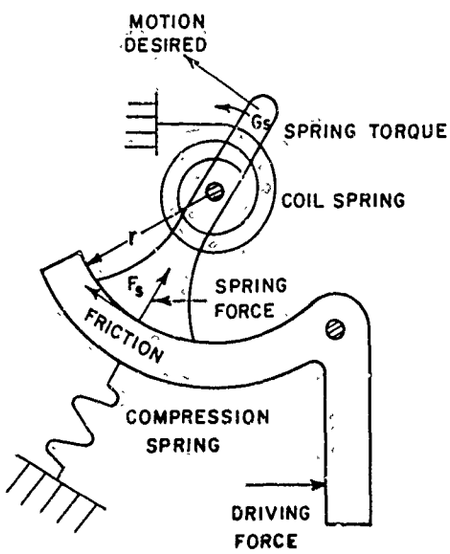

(B) Sensitive Brake

Figure 6-10. Trip Levers

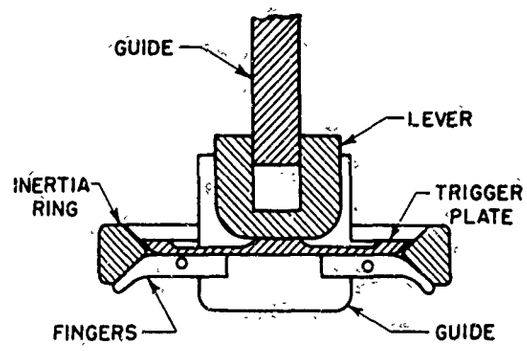

(A) Unarmed

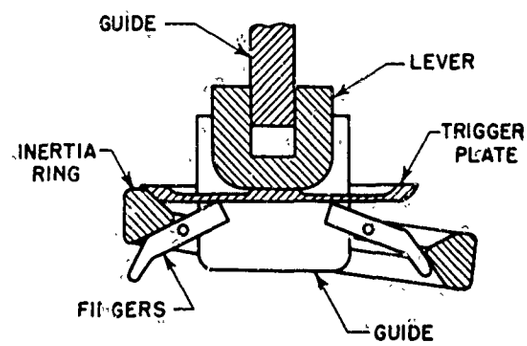

(B) Armed

Figure 6-11. Firing Ring for All-way Switch

the inertia ring. The fingers then raise the lever along its guide.

Pivots are made from hard steel rather than from jewels because the operating life of the pivot is so short. Thus the impact strength necessary to withstand setback forces becomes the important requirement. Sleeve or ball bearings can be used when necessary, but simple surface contact is normally used because space is limited. If the bearing must be lubricated corrosion problems arise, particularly after long storage.

6-4.3 SPIRAL UNWINDER

The spiral unwinder system provides arming delay in fuzes due to the effect of projectile spin. The unwinder consists of a tightly wound spiral coil of soft metal ribbon, located concentric with the spin axis around a fixed hub, and surrounded by a circular cavity (see Fig. 6-12). After firing setback has ceased, projectile spin causes the free end of the ribbon to move outward across the gap to press against the cavity wall. Continuing spin transfers successive portions of the coiled ribbon progressively outward until all of the ribbon has unwound from the central hub. The time taken by the unwinder to unwrap provides the arming delay. As the last coil of the unwinder ribbon opens, successive members in the arming process are released or unblocked. The unwinder has been used to block a striker in the safe position, to restrain an explosive train barrier, and to provide electrical switching.

The tightly wound bundle must be free to rotate around the fixed central hub, either by a loose fit or, preferably, a bearing sleeve onto which the ribbon is wrapped. Correct direction of coil winding relative to projectile spin is mandatory. A light retainer spring around the outside of the coil bundle keeps the coil intact during transport or rough handling.

(A) UNARMED (Wound) (B) ARMED (Unwound, barrier displaced)

Figure 6-12. Spiral Unwinder

Delay time can be varied from a few milliseconds to a half second depending on projectile spin rate, ribbon length (10 to 36 in.), and cavity diameter. The unwinder requires high spin rates, 12,000 rpm being about the lowest application to date. Unwinders have been made of soft aluminum, copper, and brass ribbon, about 0.002 in. thick.

The unwinder begins to operate, and continues to operate, when the force causing bundle rotation exceeds rotational friction drag forces. See Fig. 6-13 for definition of symbols and units. The centrifugal force F_c of the unbalanced ribbon bridge is

$$F_c = \frac{W_p \pi^2 N^2 r_n}{900\, g}, \text{ lb} \qquad (6\text{-}37)$$

where W_p is the weight of the ribbon bridge, lb and N is the rotation in rpm. The force tangent to the bundle at its outside diameter is

$$F_t = F_c \cos \theta, \text{ lb} \qquad (6\text{-}38)$$

and torque on the ribbon bundle

$$G_1 = F_t r_1, \text{ in.-lb} \qquad (6\text{-}39)$$

Because of the many possible varieties of interlocks and engagements, calculations for the frictional drag on the unwinder are not given here. The calculated value of total frictional torque C_F should be compared with G_1 for the appropriate values of r_c, r_1, W_r, r_n at several points in the unwinding action, specifically at its beginning and ending. It may then be determined from the results whether the unwinder bundle will start to operate and fully operate.

The excess of G_1 over G_F will rotationally accelerate the coil bundle. Rotation of the bundle is necessary to transfer a specific length of ribbon from a smaller diameter $2r_1$ to a larger diameter $2r_c$. It may be deduced that, the larger the difference of G_1 over G_F, the less the unwinder is influenced by variations in friction, and the more consistent will be the time delay provided by the unwinder design.

Unwinding should be smooth and free, without cyclic variations. Folds or ripples in the unwound ribbon lying around the inside of the drum cavity will produce chatter caused by

changing length of the ribbon bridge and may stop the unwinder.

The angular acceleration α of the ribbon bundle due to $(G_1 - G_s)$ is

$$\alpha = \frac{M}{I} \qquad (6\text{-}40)$$

where I is the moment of inertia

$$I = \frac{W_p}{2g}(r_1^2 + r_2^2), \left(\frac{\text{lb-sec}^2}{\text{in.}}\right) \text{in.}^2 \qquad (6\text{-}41)$$

Also

$$W_p = \rho t_s w s, \text{ lb} \qquad (6\text{-}42)$$

where ρ is the density, lb/in.^{3}, and w is the ribbon width, in.

Then

$$\alpha = \frac{2g\, G_1 r_1}{\pi (r_1^4 - r_2^4) w\rho} = \frac{d^2\theta}{dt^2}, \text{ rad/sec}^2 \qquad (6\text{-}43)$$

This angular acceleration will be reduced by moments due to both the elastic bending restraint M of the ribbon and friction drag M_f.

$$\alpha = \frac{2g(G_1 r_1 - M - M_f)}{\pi (r_1^4 - r_2^4) w\rho}, \text{ rad/sec}^2 \qquad (6\text{-}44)$$

Further derivation can be made for solution of the values of $\frac{d\theta}{dt}$, r, and $\frac{dr}{dt}$ for increments of time, yielding an approximation of the delay time provided by the unwinder and diameter of the coil bundle remaining. However, the increase in retarding frictional drag with increased rotational velocity of the bundle will probably be unknown, thus producing results somewhat in error.

6-5 ROTARY DEVICES

Some components of the arming mechanisms are pivoted so that they can turn through a specified angle. This rotation may be caused by centrifugal effects, by air stream effects, or by unwinding springs. The axes of the rotating members may be parallel to, perpendicular to, or at an angle with the munition axis. These features are discussed according to whether the devices are in stable or unstable equilibrium, i.e., whether the munition spin causes or merely affects their motion. The devices follow the general principle that the rotors turn until the moment of inertia of the rotor with respect to the munition spin axis is a maximum.

6-5.1 DISK ROTOR

The disk rotor is forced to turn about its diameter that is coincident with the munition spin axis. In this motion, the disk will rotate in its own plane about an axis perpendicular to the spin axis according to the above principle. The rotor shown in Fig. 6-14 is in its initial position with its symmetrical diametral axis at the angle θ to spin axis of the munition.

When the angle θ is zero, the disk has assumed the position of dynamic equilibrium. According to Fig. 6-15, the device may actually become armed before $\theta = 0°$. This is because the detonation wave from the detonator may be propagated across the gap at the overlap of detonator and lead edges. This means the fuze is no longer safe.

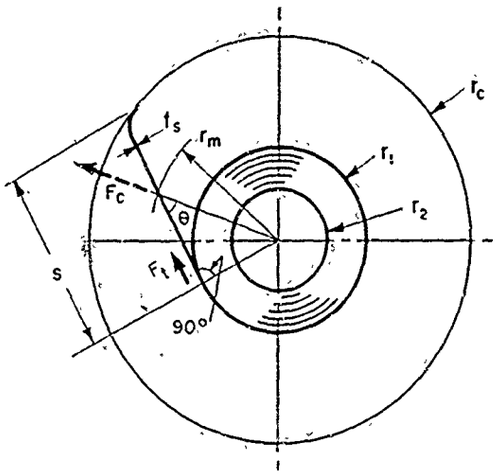

r_c = RADIUS OF CAVITY INTO WHICH THE UNWINDER OPENS

r_1 = RADIUS OF OUTER COIL

r_2 = RADIUS OF INNER COIL

r_m = RADIUS OF MIDPOINT OF RIBBON BRIDGE

s = LENGTH OF RIBBON BRIDGING BETWEEN BUNDLE AND CAVITY WALL

t_s = RIBBON THICKNESS

ALL DIMENSIONS ARE IN INCHES

NOTE RIBBON IS ASSUMED TO BE STRAIGHT AND TANGENT TO THE BUNDLE, FOR SIMPLIFICATION

Figure 6-13. Nomenclature for Spiral Unwinder

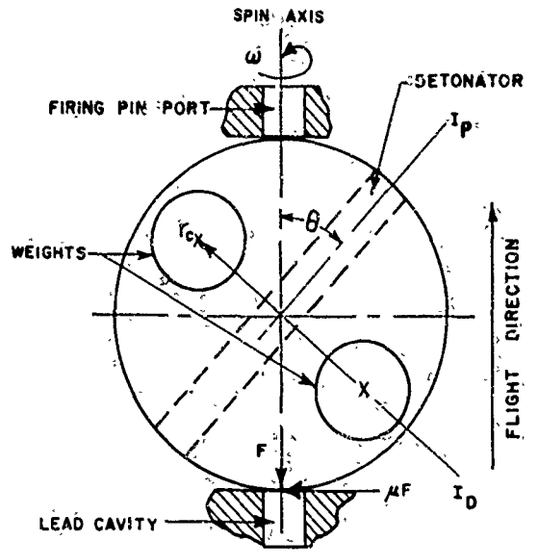

Figure 6-14. Disk Rotor

Hence, for minimum arming distance, the designer must calculate the time for the angle θ to reduce to θ' rather than to 0.

The important equation for a disk is the torque equation about the polar axis. For the disk shown in Fig. 6-14, the torque equation is

$$-J\ddot{\theta} - (I_P - I_D)\,\omega^2 \sin\theta \cos\theta = -W_p a' \mu r \quad (6\text{-}45)$$

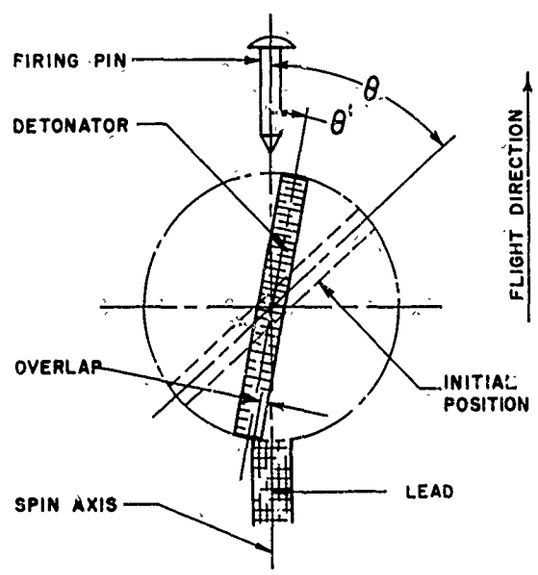

Figure 6-15. Detonator Overlap in Disk Rotor

where r is the radius of the disk, θ is any intermediate position of the disk, $\ddot{\theta}$ is the angular acceleration, and J, I_P, and I_D are moments of inertia about the three axes.

If a' is zero, the frictional torque is zero. The solution of Eq. 6-45 then becomes an elliptic integral of the first kind

$$t = \frac{1}{\omega}\sqrt{\frac{J}{I_P - I_D}} \int_{\phi_1}^{\phi_2} \frac{d\phi}{\sqrt{1 - K^2 \sin^2\phi}} \quad (6\text{-}46)$$

where $\phi_1 = \sin^{-1}\dfrac{\sin\theta'}{\sin\theta_o}$, $\phi_2 = \dfrac{\pi}{2}$, and $K = \sin\theta_o$

Tables of the function can be used to solve for t. The equation has been analyzed and solved for the T370 series of fuzes[7].

If a' is not zero, Eq. 6-45 must be solved by integrating once to give

$$\dot{\theta}^2 = \frac{I_P - I_D}{J}\,\omega^2(\sin^2\theta_o - \sin^2\theta) - \frac{2W_p a' \mu r}{J}\,(\theta_o - \theta) \quad (6\text{-}47)$$

This shows that the kinetic term must exceed the maximum value of the friction term in order that the disk may turn, i.e., $\dot{\theta}$ must be real.

Eq. 6-47 is integrated by numerical methods. The value of $\dot{\theta}$ is obtained by substituting various angular values from θ_o to θ in this equation. Plot the reciprocal of θ against θ and measure the area under the curve from θ_o to θ. The area will represent the time for the disk to move from θ_o to θ':

$$t = \int_{\theta_o}^{\theta'} \frac{d\theta}{f(\theta)} \;;\quad f(\theta) = \dot{\theta} \quad (6\text{-}48)$$

6-5.2 CENTRIFUGAL PENDULUM

This device is a bar pivoted at its center of mass. In Fig. 6-16 the pivot axis is shown perpendicular to the munition spin axis. If the centrifugal pendulum spins about an axis perpendicular to the pivot axis, it will rotate until it reaches the position of maximum moment of inertia with respect to the spin axis.

This device has an equation of motion identical with that of the disk rotor. There will be very little friction so that the friction term may be neglected and Eq. 6-46 will represent the time to swing the bar.

Note that for the disk rotor, $(I_P - I_D)$ is small so that $\dot{\theta}$ will be small and t will be large. However, for the pendulum, $(I_P - I_D)$ is large; $\dot{\theta}$ will be large and t will be small.

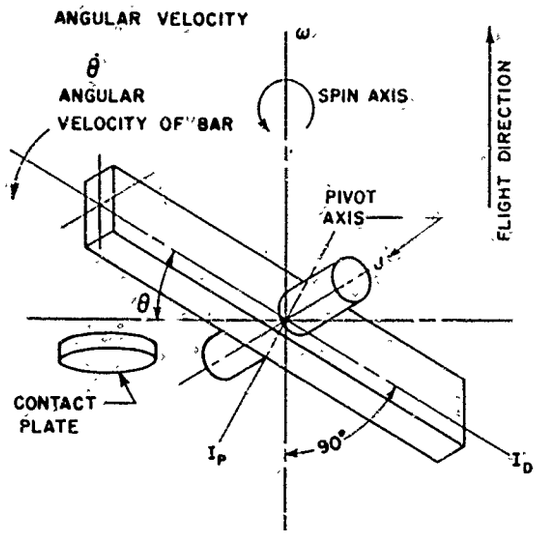

Figure 6-16. Centrifugal Pendulum

6-5.3 THE SEMPLE PLUNGER

This device, shown in Fig. 6-17, operates by centrifugal effects so as to pivot, when released, into a preferred orientation. Since the center of mass is not on a line of symmetry of the body, the moment of inertia I about the pivot point must be calculated from the expression

$$I = \int_0^m r^2 \, dm \qquad (6\text{-}49)$$

The quantities shown in Fig. 6-17 lead to the torque equation

$$G_f - \frac{W_p r}{g} (r_{cg} \sin\theta)\, \omega^2 + W_p a' r_{cg} \cos\theta = I\ddot{\theta} \qquad (6\text{-}50)$$

where G_f is the frictional torque which may be very small compared to the centrifugal force and r_{cg} in in. is the radial distance from the pivot to the center of gravity of the leaf. If G_f is known, then the equation may be solved by numerical integration as was Eq. 6-45.

$$t = \int_{\theta_o}^{0} \frac{d\theta}{\sqrt{\frac{2 W_p r_{cg} \omega^2}{I} (\cos\theta - \cos\theta_o) + \frac{2 W_p a' r_{cg}}{I} (\sin\theta - \sin\theta_o) + \frac{2 G_f}{I} (\theta - \theta_o)}} \qquad (6\text{-}51)$$

Evaluate the denominator and plot its reciprocal against θ. Measure the area under the curve from θ_o to zero which will be the time for the plunger to move.

6-5.4 SEQUENTIAL ARMING SEGMENTS

This device senses the velocity change resulting from a continued linear acceleration in the direction of the projectile axis as shown in Fig. 6-18. The mechanism consists of a series of pivoted segments, each held in position by a spring. When a sustained acceleration occurs—as when the projectile is launched—the first segment rotates through an angle sufficient to release the second segment which, after rotating, releases

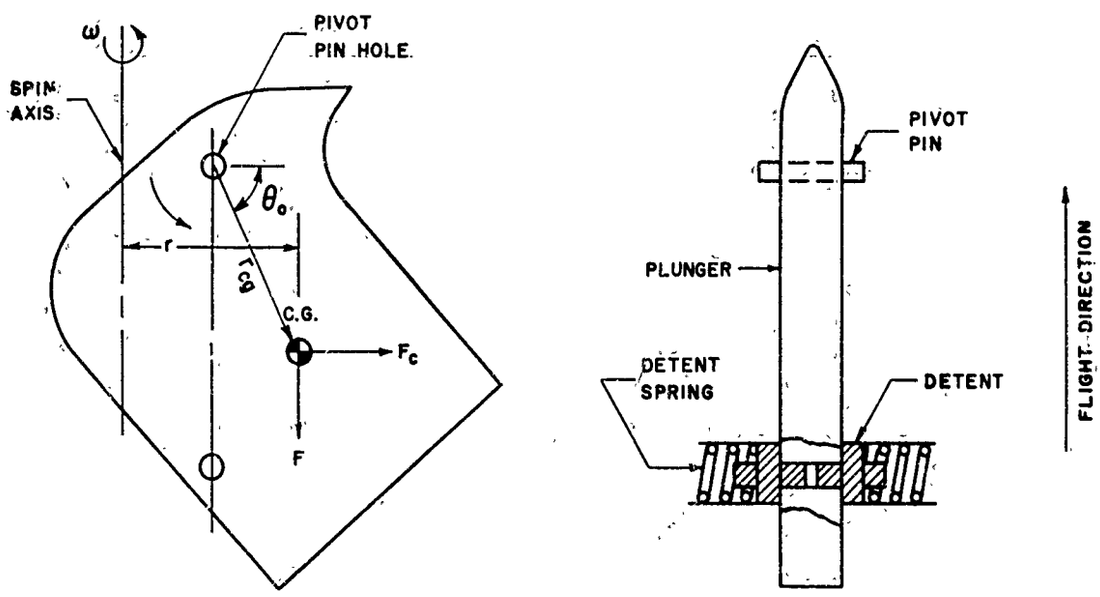

Figure 6-17. Semple Plunger

the third segment. When this last segment completes its rotation, a lock pin disengages a spring-held rotor.

The segments are designed to operate on setback. Any short-period acceleration such as may occur in a fall or a jolt will not cause the whole sequence to be completed.

Consider the problem of designing a sequential leaf mechanism to operate when it experiences an acceleration of a certain minimum magnitude a'' for a certain minimum duration $t_2 - t_1$. The values of a'', t_2, and t_1 would be selected from the setback acceleration curve, Fig. 6-19, so as to utilize a large portion of the area under the curve (velocity change). The differential equation of motion for a single leaf is

$$I\ddot{\theta} = Wa'(t)\cos(\theta - \alpha) - (G_o + k\theta) - G_f \quad (6\text{-}52)$$

The symbols for this series of equations are

W = weight of leaf, lb

r_{cg} = radial distance from pivot to center of gravity of leaf, in.

I = moment of inertia of leaf about axis of rotation, $\left(\frac{\text{lb-sec}^2}{\text{in.}}\right)$ in.^{2}

θ = angular displacement of leaf, rad

$\ddot{\theta}$ = angular acceleration, rad/sec^2

a'' = design minimum acceleration assumed constant, g

$a'(t)$ = applied acceleration, g

α = angle between perpendicular to direction of acceleration and line through center of gravity of leaf and axis of rotation of leaf, rad

G_o = torque due to prewinding of spring, in.-lb

k = spring constant, in.-lb/rad

G_f = friction torque, in.-lb

If leaf rotation is limited to the range of ± 22.5° from the horizontal, $\cos(\theta - \alpha)$ can be

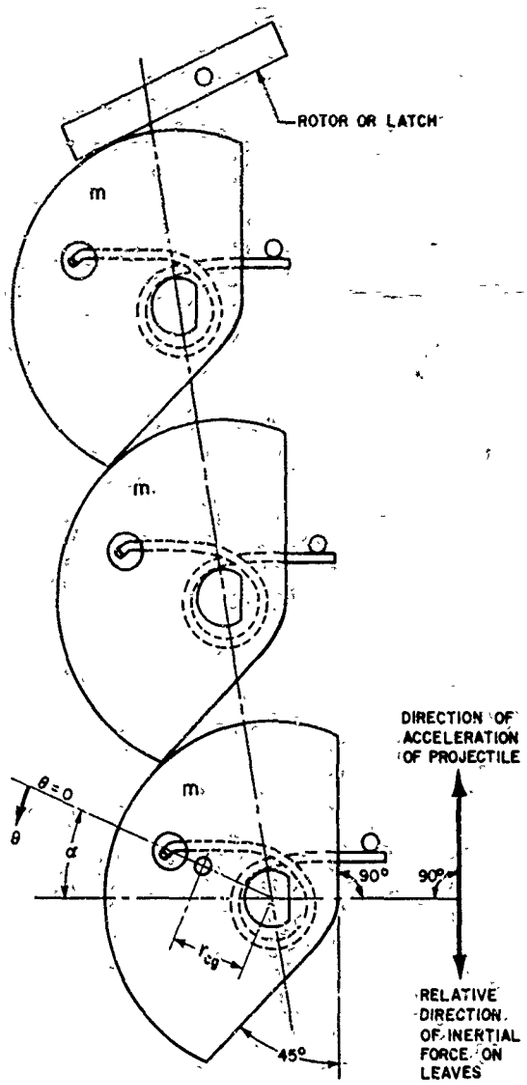

Figure 6-18. Sequential Leaf Mechanism

assumed equal to unity without introducing serious error. Also, the initial spring torque G_o can be expressed as $Wr_{cg}a''$, where $a'' < a'$. Thus the equation becomes

$$I\ddot{\theta} = Wr_{cg}\left[a'(t) - a''\right] - k\theta - G_f \quad (6\text{-}53)$$

Assuming $a'(t) = a'$, a constant, and $\theta(0) = \dot{\theta}(0) = 0$, the solution is

$$\theta = \left[\frac{Wr_{cg}(a' - a'') - G_f}{k}\right](1 - \cos\omega t) \quad (6\text{-}54)$$

where $\omega = \sqrt{k/I}$. The arming time for a single leaf is thus

$$t_{1\,arm} = \frac{1}{\omega}\cos^{-1}\left[1 - \frac{k\theta_{arm}}{Wr_{cg}(a' - a'') - G_f}\right] \quad (6\text{-}55)$$

For a mechanism with three identical leaves, $t_{3\,arm} = 3t_{1\,arm}$ and in the case under consideration, $t_{3\,arm} = t_2 - t_1$ and $a' = a''$.

For sustained acceleration of a magnitude above the minimum magnitude a'', the arming time decreases with increasing acceleration magnitude. A consequence of this is that a sustained acceleration of magnitude greater than a'' might arm the mechanism even though the acceleration lasts for less than the time interval $t_2 - t_1$. It has been found that a carefully designed mechanism can be made not to arm only for drops up to a height for which the impact velocity is one-half the design velocity change. For drops where the impact velocity is equal to or greater than one-half the design velocity change, each drop pulse must be examined individually.

the setback acceleration curve, each leaf would be designed to operate at a slightly different minimum acceleration. This can be done by varying the thickness of the leaves. Fig. 6-19 shows a typical setback acceleration curve and the portions of the curve utilized for operation of each leaf.

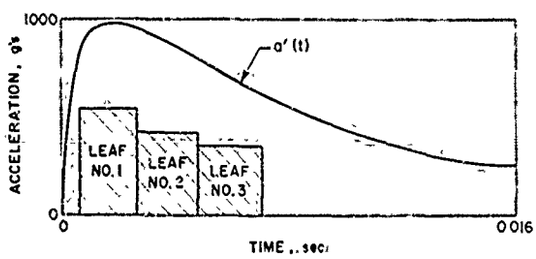

Figure 6-19. Setback Acceleration Curve

6-5.5 ROTARY SHUTTER

This device is illustrated in Fig. 6-20. The plane of a disk type shutter is rotated about the spin axis of the munition. There are three points peculiar to the construction of this shutter: (1) it is pivoted at the center of the semicircular part, (2) it is set to rotate in its own plane so that either the flash hole before rotation or the detonator after rotation is centered on the munition axis (the flash hole is a blind hole intended

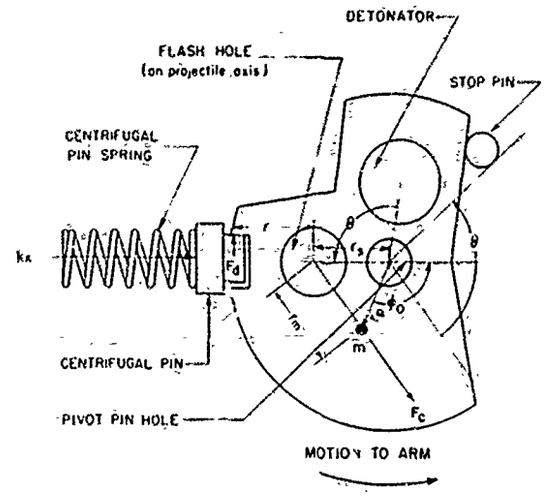

Figure 6-20. Rotary Shutter

to capture the burning particles; flash holes have been found to be unnecessary in recent designs), and (3) the center of mass is located neither at the pivot nor on the munition axis. When the fuze spins, centrifugal effects will cause the shutter to turn after the centrifugal pin releases it.

The moment of inertia I about the pivot must be found from Eq. 6-49 and then the equation of motion will be

$$I\ddot{\phi} = -m\omega^2 r_s r_p \sin\phi + G_f \quad (6\text{-}56)$$

where m is the mass of the disk, r_s and r_p are radii indicated in Fig. 6-20, and ϕ is the angle as indicated. The solution must again be found by numerical integration of the equation

$$t = \int_{\phi_o}^{\phi_o - \theta} \frac{d\phi}{\sqrt{\frac{2m\omega^2 r_s r_p}{I}(\cos\phi - \cos\phi_o) + \frac{2G_f}{I}(\phi - \phi_o)}} \quad (6\text{-}57)$$

This will be the time to rotate from ϕ_o to $(\phi_o - \theta)$. At this angle the detonator is aligned with the munition spin axis. As before, ϕ may be larger than $(\phi_o - \theta)$ because the detonator could be initiated before it is exactly on center.

6-5.6 BALL CAM ROTOR

A device can be used that has a timing cycle inversely proportional to the rotational velocity of the fuze. Since projectiles from a given gun

have very nearly the same spin when fired under identical conditions, this device produces a nearly uniform time delay. The device consists of three parts: (1) a ball which moves in a centrifugal field, (2) a stationary part with a slot radial to the fuze spin axis to guide the ball, and (3) a rotor with a spiral slot which is turned as the ball moves radially. Fig. 6-21(A) shows the ball in the slots of the rotor and stator. The forces on the spiral slot are shown in Fig. 6-21(B) and those on the ball in Fig. 6-21(C). The torque equation for the rotor is

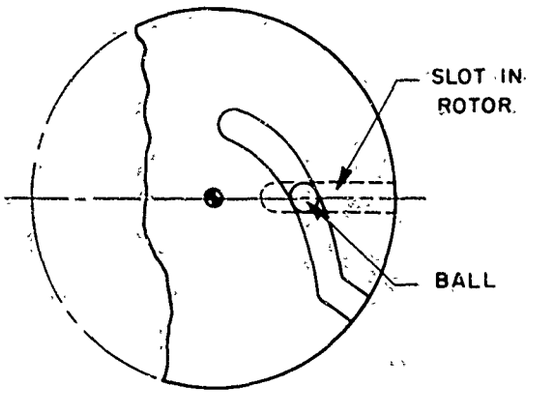

(A) Ball Cam Rotor Assembly

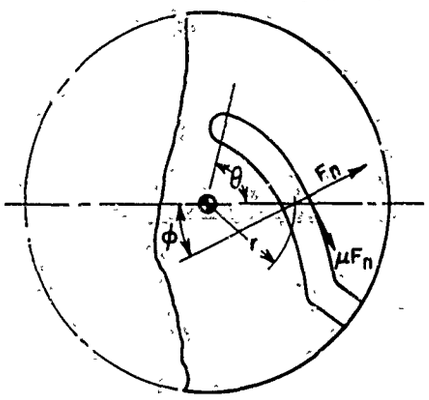

(B) Forces on the Spiral Slot

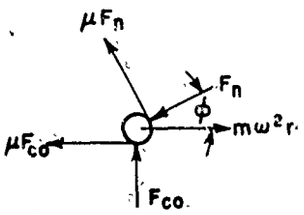

(C) Forces on the Ball

Figure 6-21. Ball Cam Rotor

$$F_n r \sin\phi - \mu F_n r \cos\phi = I\ddot{\theta} \qquad (6\text{-}58)$$

where ϕ is the slot spiral angle and θ the rotation. (The center of rotation is on the fuze spin axis.)

The force equations $(F = ma)$ for the ball are

$$mr\omega^2 - F_n(\cos\phi + \mu\sin\phi) - \mu F_{co} = m\ddot{r} \qquad (6\text{-}59)$$

$$F_{co} - F_n(\sin\phi - \mu\cos\phi) = 0 \qquad (6\text{-}60)$$

where F_{co} is the Coriolis force necessary to accelerate the ball about the axis because it has a radial velocity (see par. 5-4.5). Combine Eqs. 6-58, 6-59, and 6-60 to eliminate F_{co} and F_n. The equation becomes

$$mr^2\omega^2\tan\phi\left(\frac{1-\mu/\tan\phi}{1+2\mu\tan\phi-\mu^2}\right) = I\ddot{\theta} \qquad (6\text{-}61)$$

To solve Eq. 6-61 conveniently and obtain an approximate solution, define r as $r_o + s\theta$ where s is the spiral constant; recognize that $r\tan\phi$ equals $dr/d\theta$; let $(1-\mu/\tan\phi)/(1+2\mu\tan\phi)$ equal C, a constant; assume $\mu < \tan\phi$; and assume $r\omega^2 >> \ddot{r}$ where $\ddot{r}$ is the radial acceleration of the ball. Making the indicated substitutions, one can write the differential equation

$$I\ddot{\theta} - m\omega^2 C s^2\theta = m\omega^2 C s r_o \qquad (6\text{-}62)$$

from which is obtained

$$t = \frac{1}{\omega s}\sqrt{\frac{I}{mC}}\cosh^{-1} r/r_o \qquad (6\text{-}63)$$

This equation shows that the time to rotate the rotor is inversely proportional to the spin of the projectile.

6-5.7 BALL ROTOR

If the fuze in a spinning projectile requires a larger arming delay than that obtainable with some disk rotors, a ball rotor like that shown in Fig. 6-22 can be used. The ball has a diametral cavity for the detonator. In the unarmed position, the ball is oriented and held by four detents so that the detonator is out of line with the firing pin and the booster. During the arming process, the detents withdraw from the ball as the spring expands when the projectile reaches the proper spin velocity. The ball is then free to turn in its spherical seat until it reaches the position of dynamic equilibrium. The detonator is then aligned.

One approach to the equations of motion for the ball is given in Appendix I. Equations are derived for the starting conditions, and the spin velocity at which the detents drop out is found to be

$$\omega = \sqrt{\frac{\mu Z r}{(J - I) \sin\alpha \cos\alpha}} \qquad (6\text{-}64)$$

The meaning of the symbols is given in the appendix.

Because the ball inevitably rolls in its spherical seat so that the contact point varies with time, the differential equations become exceedingly complicated. Usually, the practical solution for the ball rotor is obtained by experimental methods.

The factors considered necessary to design a ball rotor are the moments of inertia of the ball, spin of the projectile, time delay required, size of the detonator in relation to the firing pin, and size of the detent springs. Some of the parameters that may be changed are diameter, position of the center of gravity, and density of the ball. It is suggested that the center of gravity be close to the geometrical center of the ball, the preset angle of the detonator be near 45°, and the detents simultaneously disengage the rotor.

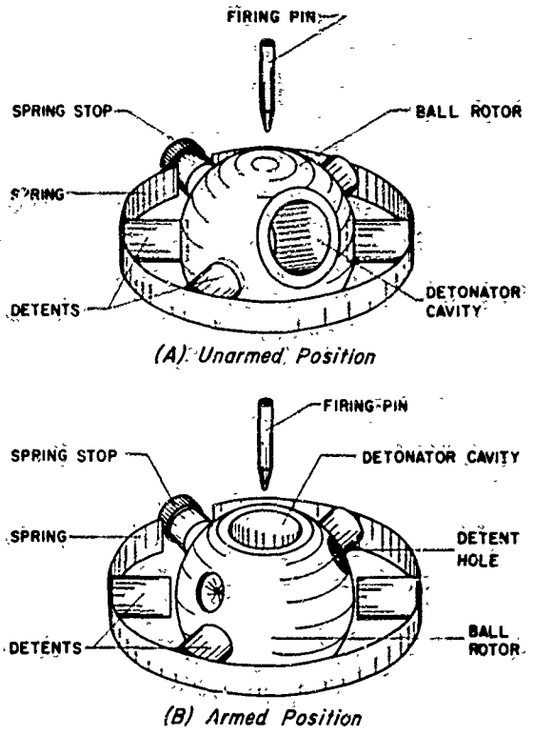

Figure 6-22. Ball Rotor

6-6 CLOCKWORKS

A clockwork may be used to establish a time interval from the instant of launching to the initiation of the primer. It is not ordinarily used to measure arming times although the principles could be extended to arming. Clockwork is one of the oldest devices used successfully in fuzes for timing.

There are many parts of a clockwork but only the escapements and gear trains are discussed in detail. Design features of gears, bearings, and shafts are covered in standard design texts[5]. Note, however, that conventional designs must be used with care. Normally, the procedures advanced are for machine elements having smooth power transmission. In contrast, the fuze clockwork transmits low levels of torque at low running speeds. In addition, the fuze has space limitations that require the use of small pinions with few teeth (usually 8). Remember also that the environment is severe (see par. 9-2.1), special lubrication problems exist (see par. 14-7), and the relation of the setting and indicating devices is critical (see par. 14-4).

6-6.1 ESCAPEMENT TYPES

Escapements are the regulators of mechanical time fuzes while gear trains are their transducers. There are three types of regulating devices:[9]

(1) Group I - Untuned Two-center Escapements: A pivoted mass driven by an escape wheel. Physically, this is a mass oscillating without a spring by depending on its own inertia to control its motion. Example: runaway escapement.

(2) Group II - Tuned Two-center Escapements: A combination of a pivoted balance and mass restoring spring, pulsed twice per cycle by an escape wheel. Physically, this is a mass on a spring executing simple harmonic motion. Example: Junghans escapement.

(3) Group III - Tuned Three-center Escapements: An intermediate link is placed between escape wheel and oscillating mass to improve the precision of impulse delivery and to minimize drag torque. Example: detached lever escapement.

6-6.2 UNTUNED TWO-CENTER ESCAPEMENTS

An untuned or runaway escapement is a timing device with a cyclic regulator that does not execute simple harmonic motion. The system consists of three parts: (1) a toothed wheel actuated by an applied torque, (2) a pallet with two teeth, and (3) a mass oscillating without a restoring force. Fig. 6-23 shows one shape for an escape wheel. It differs from that in the tuned escapement because it must always permit motion of the pallet. When the escape wheel turns, one pallet tooth is pushed along the escape wheel tooth. The other pallet tooth then engages the escape wheel. A constant torque applied to the escape wheel will cause the oscillating system to operate like a governor because the mass of the oscillating part must be driven through a restricted path. All changes in this torque will alter the frequency of oscillation of the runaway escapement.

The frequency of pallet oscillation f_n may be calculated from the torque G on the escape wheel if the following assumptions are made: (1) the half cycles of the pallet are equal in time, (2) the driving torque is constant, (3) the impact is inelastic, and (4) the friction is negligible. If θ is the angle between extreme positions of the pallet in radians and I_n is the moment of inertia of the oscillating mass in slug-in.^{2}, then

$$f_n = \frac{1}{2}\sqrt{\frac{G r_p / r_w}{2 I_n \theta}} \qquad (6\text{-}65)$$

where r_p is the radius of the pallet wheel, in.; r_w is the radius of the escape wheel, in.; G is the torque, in.-lb. Thus the frequency varies as the square root of the escape wheel torque. When designing the gear train, the designer must remember that G is the actual rather than the theoretical torque. (Use 30% of the theoretical torque as a first approximation.)

To meet safety requirements, the fuze must not become armed until it has traveled a certain minimum safe distance from the launcher. The ideal device would measure this distance directly. In lieu of this difficult if not impossible task, a time interval is measured in such a way that it is directly related to the distance. A timing device would suffice if the speed of the projectile were constant. Timed arming devices can be applied with reasonable confidence to projectiles; however, the behavior of rockets and missiles is too variable to measure arming distances with timing devices even if the assumption were true that all rockets performed normally.

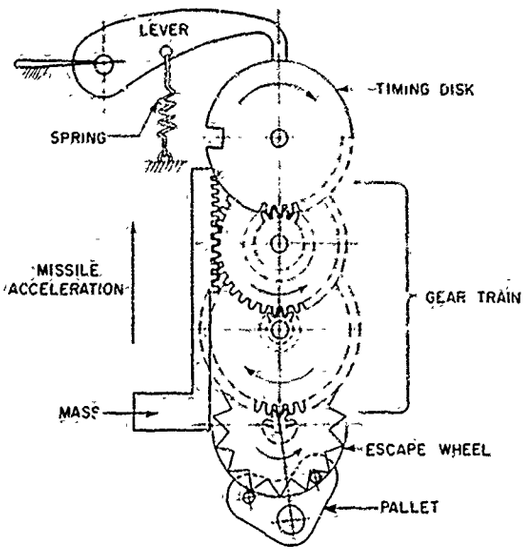

Figure 6-23. Runaway Escapement

This is brought about by the fact that the acceleration-time diagram for rockets is not the same even for all those of one type. Fig. 6-24 shows the influence of rocket motor temperature (at the time of firing) upon the acceleration-time diagram. Other factors such as air density, velocity of the launcher, and steering activity can have pronounced effects on the acceleration-time diagram.

Suppose for example, that it is desired to arm the rocket at 700 plus or minus 100 feet from the launcher. Fig. 6-25 shows that the arming time must vary with the acceleration of the rocket if the arming distance would be held within

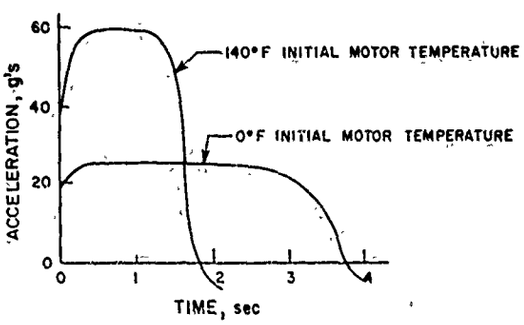

Figure 6-24. Typical Rocket Accelerations

the specified tolerance. Thus, a fixed-time timer would not be satisfactory.

The problem can be solved with a runaway escapement timer. If the escapement is driven by a device which derives its power from the acceleration of the rocket, the escapement can be designed to effect arming in the same distance even under differing values of acceleration. Fig. 6-23 shows a device in which the torque applied to the escapement will be proportional to the setback acceleration.

The time t to arm can be expressed as

$$t = \frac{1}{k_1 f_n} \qquad (6\text{-}66)$$

because it depends upon the number of oscillations of the pallet and thence upon its frequency f_n. k_1 is a proportionality constant. The distance along the trajectory that the rocket will travel during the arming time, assuming constant acceleration, is

$$S = \tfrac{1}{2} a t^2 \qquad (6\text{-}67)$$

The torque is given by

$$G = m a r_w k_2 \qquad (6\text{-}68)$$

where m is the mass of the driving mass on Fig. 6-23, a is the rocket acceleration, r_w is the radius of the escape wheel, and k_2 is the ratio constant between driving gear and escape wheel. Combining Eqs. 6-65 to 6-68, a constant arming distance can be expressed as

$$S = \frac{4 I_n \theta_1}{k_1^2 \, m k_2 r_p} \qquad (6\text{-}69)$$

in which all terms on the right are independent of the rocket ballistics.

The runaway escapement can be employed to establish a constant arming distance in this circumstance. However, the analysis assumed that for any one rocket the acceleration during flight would be constant which is not necessarily true. Some rocket motors exhibit characteristics which make the rocket accelerations vary with time. Fortunately, the total arming distance S_T is only moderately affected as shown in the equation

$$S_T = S + \frac{1}{k_3 a^3} \qquad (6\text{-}70)$$

Since both k_3 and a are large compared to S, the second term becomes insignificant.

Eq. 6-65 describes an idealized device and cannot account for effects of friction or materials. For a particular one-second timer, the empirical equation for the average velocity $\bar{\dot{\theta}}$ of the escape wheel is given by

$$\bar{\dot{\theta}} = 0.231 I_w^{0.112} G^{0.5} / I_n^{0.612} \qquad (6\text{-}71)$$

where I_w is the moment of inertia of the escape wheel, the other terms having been previously defined. This is of the same form as Eq. 6-65 because

$$f_n = N_w \bar{\dot{\theta}} (2\pi) \qquad (6\text{-}72)$$

where N_w is the number of teeth in the escape wheel. The constant coefficient in Eq. 6-71 is found to depend upon various factors: center-to-center distance between escape wheel and pallet, radius of the pitch circle of the escape wheel, friction of the gear train, and number of times that the mechanism has been "run down."

6-6.3 TUNED TWO-CENTER ESCAPEMENTS

When masses on springs vibrate, the amplitude of the oscillation decreases to zero according to Eq. 6-11. Friction damps out the oscillations so that a force must be applied to maintain the oscillations. If this driving force adds energy in phase, the frequency of oscillations will not be changed. But the natural frequency is dependent upon the frictional forces (usually undetermined) so that the designer must approach the problem carefully.

The escapement is the part of a timing device which (1) counts the number of oscillations executed by the oscillating mass, and (2) feeds energy to the oscillating mass. The pallet controls the rotation of the escape wheel while it

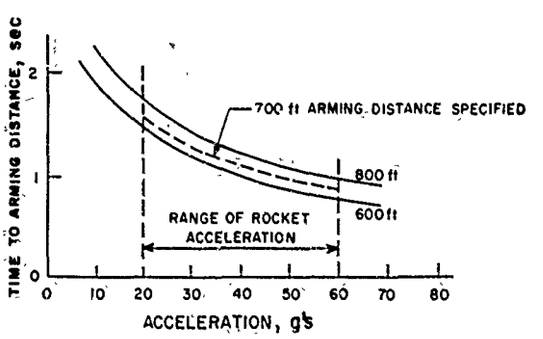

Figure 6-25. Variation in Rocket Arming Time

receives energy that maintains the oscillation. As the pallet teeth trap and release escape wheel teeth, the rotation of the escape wheel depends upon the frequency of oscillations of the pallet.

6-6.3.1 Description of Escapement Mechanisms

In the recoil or Junghans mechanism, the escape wheel recoils or moves backward after a pallet tooth impact. Hence, the escape wheel and the gear train are momentarily reversed. Any tendency to lengthen the distance the pallet swings is resisted by the recoil forces. The recoil design lends itself to self-starting, perhaps at the expense of accuracy. In the deadbeat Junghans escapement, the escape wheel stops but does not reverse its motion. Fig. 6-26(A) shows tooth *A* falling on pallet tooth *A'*. In Fig. 6-26(B), the pallet is passing through the equilibrium point in its oscillation where tooth *A* is about to be released by the pallet. In Fig. 6-26(C), the escape wheel tooth *C* has fallen onto the pallet tooth *B'* which is the opposite part of the cycle from Fig. 6-26(D). If the line of action of the impulse passes through the pivot of the pallet, the motion of the pallet will not be altered. As tooth *B'* slides beneath tooth *C*, the escape wheel stops. In Fig. 6-26(D), the pallet has returned to its equilibrium position and is being driven by the escape wheel as shown in Fig. 6-26(B). If the energy is added as the pallet passes through its equilibrium position, the frequency of the oscillating mass (regulator) is least affected.

In order to save space, pallet teeth are placed close to the pivot but this is limited because steep angles between pallet and escape wheel teeth increase wear. Wheel teeth are undercut to allow the pallet to swing to its fullest extent.

The Junghans escapement described above

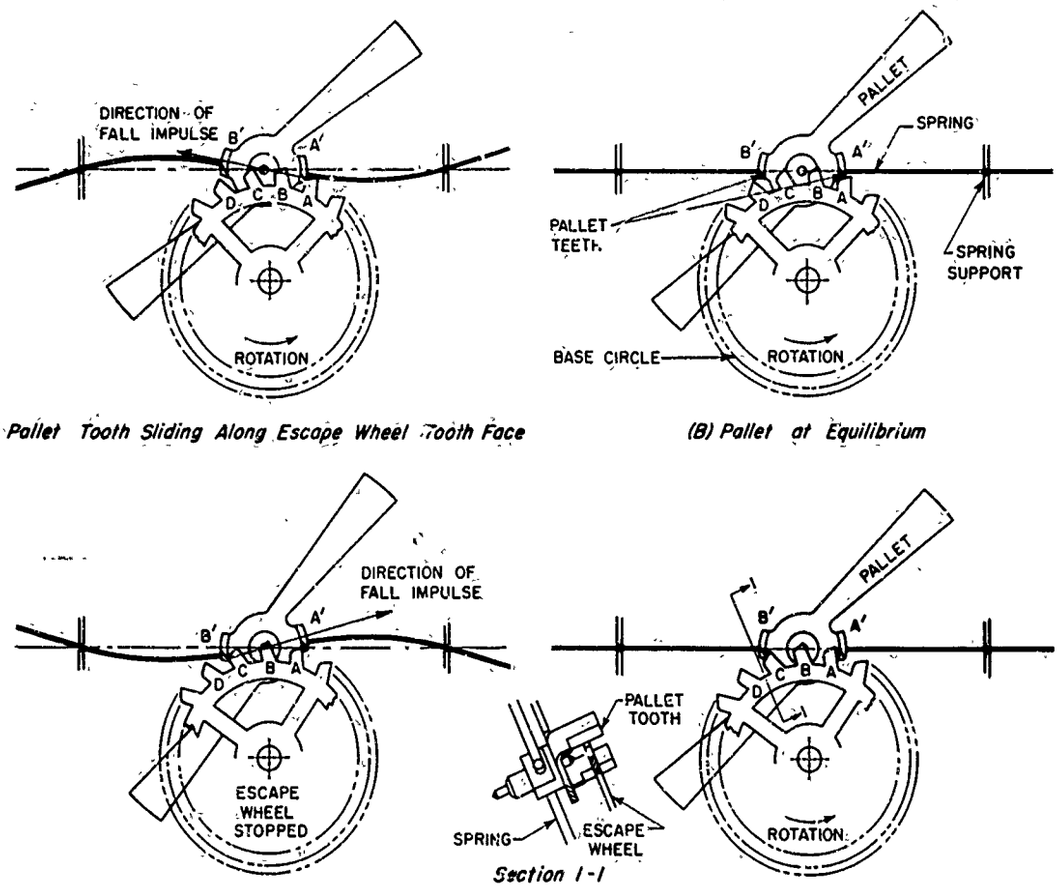

(A) Pallet Tooth Sliding Along Escape Wheel Tooth Face

(B) Pallet at Equilibrium

(C) Escape Wheel Tooth Falling on Pallet Tooth

(D) Pallet at Equilibrium

Figure 6-26. Action of Junghans or Deadbeat Escapement

has been modified by Dock[10] and Popovitch[11] to improve accuracy. The Dock modification uses a round wire escapement spring in place of the bar-shaped spring of the Junghans escapement. The Dock modification reduces the spin sensitivity of the mechanism and also obviates straightening of the spring after it is inserted into the arbor. The Popovitch modification is shown in Fig. 6-27[11]. It uses two outboard springs instead of an escape spring on the arbor. This modification also reduces the spin sensitivity of the mechanism.

6-6.3.2 Description of Tooth Design

Escape wheel teeth deliver energy to the pallet, and the ideal tooth contour is the locus of contact point as the pallet oscillates. Even though the oscillation is damped, the impulse should compensate for the damping forces. However, such a design is impractical because the required tolerances are too small. Still, the tolerances are not so stringent if the pallet velocity and the torque accelerating the escape wheel are both constant.

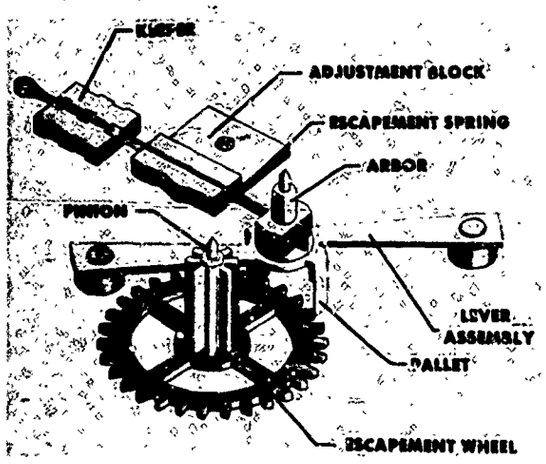

Figure 6-27. Popovitch Modification of Junghans Escapement

Kelly and Zar derived an equation for the escape wheel tooth contour using the conditions for maximum efficiency[1,2]. The x and y coordinates shown in Fig. 6-28 are related by the equation

$$x = \frac{1}{2}\frac{r_w G y^2}{v^2 I} \qquad (6\text{-}73)$$

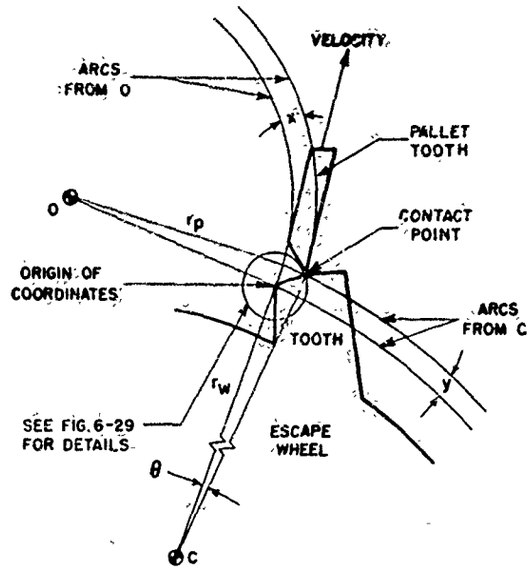

Figure 6-28. Coordinate System for Analysis of Tooth Design

where r_w is equal to the radius of the escape wheel and G is the torque thereon, v is its peripheral velocity, and I is the total moment of inertia.

Fig. 6-29 enlarges the portion circled in Fig. 6-28. The coordinate system consists of arcs drawn with the pivot point of the pallet and the escape wheel as respective centers. The origin is noted for $x = y = 0$. By assuming representative values, the contour shown in Fig. 6-29 was plotted, r_p (the radius of the pallet tooth) is 0.1 in., r_w is 0.25 in., the frequency of oscillation of the pallet is 110 cycle/sec, I is 10^{-5} slug-in.^{2}, the minimum torque G is 0.2 in.-oz, and v is 9.65 in./sec. The lower contour curve represents 100% energy transfer with no allowance for frictional losses in the escapement. If the losses are 20%, the ordinate y, being proportional to $G^{-1/2}$, must be increased by a factor of 10%. The upper curve on Fig. 6-29 is the contour allowing for these losses.

6-6.3.3 Description of Spring Design

The natural frequency f_n of the escapement neglecting friction is

$$f_n = \frac{1}{2\pi}\sqrt{k/I_n}\,, \text{ cycle/sec} \qquad (6\text{-}74)$$

where k is the spring constant and I_n is the moment of inertia of the oscillating system. For

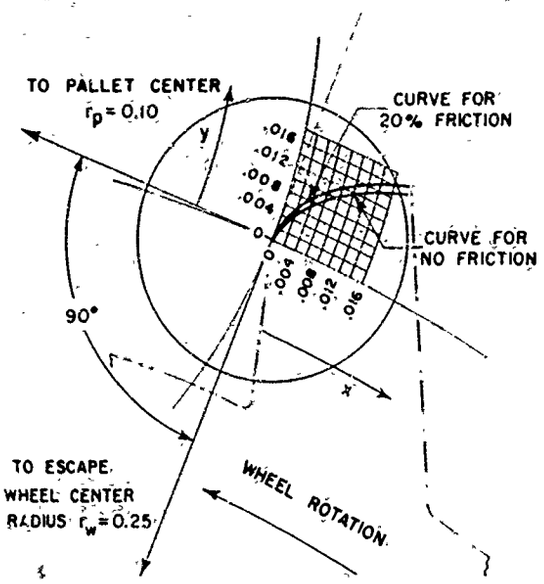

Figure 6-29. Escapement Wheel Tooth Design

stability, the spring forces should be large compared to the inertial forces caused by the munition's accelerations; hence, k must be large and I_n small. Since a watch spring (hairspring) does not satisfy these requirements, a small beam or torsion bar is used. The type shown in Fig. 6-26 has been used for many years. The figure shows that the spring is doubly supported at each end with the pallet at its center. Table 6-1 gives the spring constant for a flat leaf spring, $12EI_A/l$, where l is the length, I_A is the second moment of the cross-sectional area, and E is Young's modulus. By using this k in Eq. 6-74 and the data from a representative fuze—I_A is 6.56×10^{-11} in.^{4}, I_n is 1.86×10^{-8} slug-in.^{2}, l is 0.953 in., and E is 30×10^6 psi—the frequency will be 184 cycle/sec. Naturally, the design includes a means to change the dimensions of the spring because an adjustment is usually necessary to compensate for manufacturing tolerances of the timing mechanism.

Another type of torsion spring has been introduced recently. If a torsion bar is placed along the munition axis, the spin of the munition will not affect its action. The formula given in Table 6-1 is good for a spring of circular cross section. For other shapes the formula is given by

$$\frac{G}{\theta} = \frac{k'G'}{l} \qquad (6\text{-}75)$$

where G is the torque, θ the angle in radians, G' the shear modulus, l the length of the spring, and k' a constant depending upon the cross section. A standard text such as Roark should be studied before using this formula[13].

6-6.4 TUNED THREE-CENTER ESCAPEMENTS

In the detached lever escapement, one end of a pivoted lever acts, by means of two pallets, in conjunction with the escape wheel. The other end acts on the balance mass. A pin-pallet detached lever escapement is shown in Fig. 6-30[14]. The figure illustrates the mechanism as used in clocks, watches, and certain ordnance timers but does not show the recent modification for artillery fuzes that is still classified. The new escapement uses a torsion bar restoring spring and a folded lever. Tests have demonstrated that the accuracy of the escapement is on the order of 0.1% of the set time for flights up to 115 seconds. In contrast, tuned two-center escapements have achieved accuracies on the order of 0.5 to 1%.

6-6.5 CLOCKWORK GEARS AND GEAR TRAINS

The design of the gear train depends upon the time interval to be measured. The gear train is signed according to the following equation

$$x = f_n t 360/(\theta N_w) \qquad (6\text{-}76)$$

where N_w is the number of teeth on the escape wheel, x is the total gear ratio of the gear train, θ in degrees is the required angle for the last pinion, t is the functioning delay, and f_n is the escapement frequency. If f_n is 368, N_w is 20, and t is 30 seconds, then x would be 2208 if the final pinion rotates 90°.

N_w must be designed to place a maximum number of teeth on the escape wheel without increasing the moment of inertia, f_n should be high for stability, and t is set by the requirements placed upon the fuze. The gear ratio must be set so that the above stipulations may be met. Normally, individual gear ratios are held to small whole numbers.

For the Junghans escapement, the maximum escape wheel torque is that at which friction stops the pallet. The minimum torque is just above that at which the proper tooth fails to fall

onto the dead face of the other pallet. Eq. 6-73 can be used for this type of escapement to determine the tooth form when the escape wheel is turned by a constant torque.

When the efficiency of the gear train is determined, the magnitude of the applied torque that can overcome all these losses and still maintain the necessary torque at the escape wheel can be approximated. Usually, several trials are required before all conditions of size, shape, frequency, and torque are satisfied.

The disturbing effects of both linear and angular acceleration of the munition are minimized if the escapement pallet is pivoted on the munition's spin axis. As in all other mechanisms, the friction of all bearings and the mass of all parts should be kept as small as is consistent with proper operation.

Note that setback forces will usually act perpendicularly to the plane of the gears. This tends to bend them so that they will bind or even drop out of mesh with their companion gears. Consequently, the arming action should be designed so that the gears are not expected to transmit high torques while undergoing high setback forces.

Both involute[15] and epicycloid tooth shapes are used, and the selection often depends upon the production facilities available. The Wickenberg gear tooth design allows greater radial tolerances because of the larger root depth. A minimum of six teeth is used on small pinions in current practice.

Tooth strength, wheel configuration, shaft strength, and bearing size are calculated by the usual methods of general machine design with due consideration given to the peculiar conditions stated above[16,17].

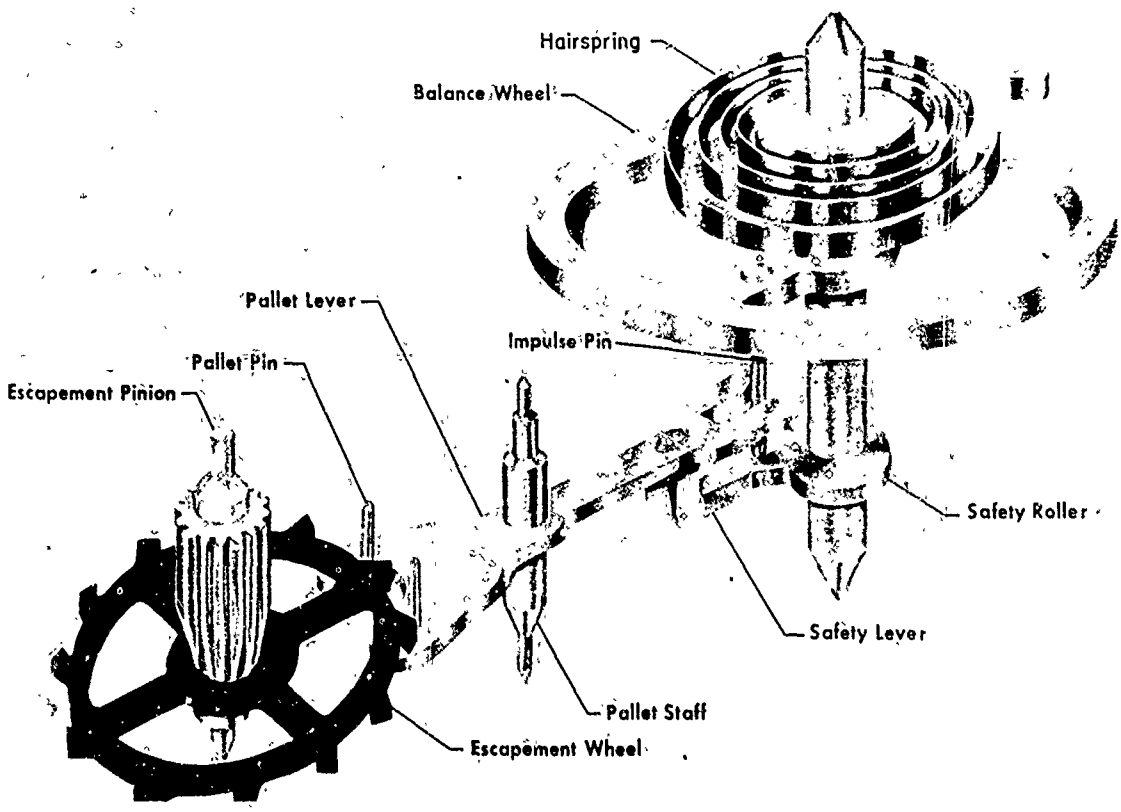

Figure 6-30. Detached Lever Escapement

REFERENCES

1. B. R. Dudley and H. W. Swift, "Frictional Relaxation Oscillations," Phil. Mag., Series 7, **40**, 849-861 (1949).
2. MIL-STD-29A, *Springs, Mechanical; Drawing Requirements For*, Dept. of Defense, 1 March 1962.
3. A. M. Wahl, *Mechanical Springs*, McGraw-Hill Book Co., Inc., N.Y., 1963, Chapter 12.
4. F. A. Votta, "Theory and Design of Long-Deflection Constant-Force Spring Elements", Trans. ASME **74**, 439-450 (1952).
5. R. LeGrand, Ed., *The New American Machinist's Handbook*, McGraw-Hill Book Co., Inc., N.Y., 1955, Part 7.
6. Kent's *Mechanical Engineer's Handbook, Design, Shop Practice*, John Wiley & Sons, N.Y., 1950.
7. R. E. Miller and W. J. Worley, "Mathematical Analysis of a Dynamic Arming Mechanism for a Projectile (U)", University of Illinois, Urbana, Ill., Appendix B, *in* D. A. Bednar, *Final Summary Report, Fuze, PIBD, T370 Series (U)*, The Magnavox Co., 1 October 1964, Contract DA-11-022-ORD-3454, (Secret).
8. L. S. Marks, *Mechanical Engineers' Handbook*, McGraw-Hill Book Co., Inc., N.Y., 1958.
9. "Clock Escapement Timers (U)", Part Two, *Journal of the JANAF Fuze Committee*, Serial No. 27, June 1967, AD-384 530 (Confidential).
10. K. Schulgasser and C. Dock, "Development of the Dock Escapement", *Proceedings of the Timers for Ordnance Symposium*, Vol I, Sponsored by U.S. Army Harry Diamond Laboratories Washington, D.C., November 1966, pp. 15-34.
11. D. Popovitch, *Timing Escapement Mechanism*, U.S. Patent 3,168,833, 9 February 1965.
12. F. G. Kelly and J. L. Zar, "An Improved Fuze Escapement for the MK 18 and Other U.S. Navy Mechanical Time Fuzes", J. of Applied Mech. **13**, A285-A290 (December 1946).
13. R. J. Roark, *Formulas for Stress and Strain*, McGraw-Hill Book Co., Inc., N.Y., 1943, p. 168.
14. D. Popovitch, S. Alpert, and M. Eneman, "XM-577 MTSQ Fuze", *Proceedings of the Timers for Ordnance Symposium*, Vol I, Sponsored by U.S. Army Harry Diamond Laboratories, Washington, D.C., November 1966, pp. 131-194.
15. Earl Buckingham, *Manual of Gear Designs*, Sponsored by American Gear Manufacturers Association, Industrial Press, N.Y., 1935.
16. W. O. Davis, *Gears for Small Mechanisms*, N.A.G. Press Ltd., London, 1953.
17. *Horological Literature Survey (Gear Trains)*, Frankford Arsenal, Philadelphia, Pa., Report R-1735, August 1964, AD-453 624L.

CHAPTER 7
ELECTRICAL ARMING DEVICES

7-1 GENERAL

Electrical arming actions include both all-electrical actions (for example, closing a switch) and movement of mechanical devices by electrical means. Electrical devices possess many advantages under certain conditions especially when fast action is desired. Switches and explosive motors are common examples.

Electrical arming is an obvious extension for fuzes that function by electrical means. It may be convenient to activate the out-of-line device by electrical means or add electrical arming as an extra safety device to interrupt the circuit or to short circuit the leads of the electric detonator. An electric fuze always contains the latter safety feature. When designing an electric fuze, the order of arming is important. Since electrical discharges may occur, the electric circuit should be completed before mechanical arming actions occur.

In addition to convenience, electrical arming also makes possible some features that are extremely difficult to achieve otherwise. For example, long delays are easily obtained electrically.

For preselected arming, electrical means have a pyrotechnic train. Preselected arming implies that a fuze has several possible arming delays, one of which is selected prior to launching. The arming delay is selected by adjusting a resistor or a capacitor. External power for the fuze can be applied in aircraft or tanks, but unfortunately this convenience will not always be available in the field. Command arming, transmitted to the projectile in flight, must be electrical.

The circuitry used for arming is often similar to that used for functioning (see par. 3-4.4). For convenience, RC circuits are treated fully in par. 7-3. Some power sources and other components are discussed in par. 3-4, while others are treated in par. 7-2. Devices such as switches and explosive motors are used almost exclusively in arming.

7-2 COMPONENTS

7-2.1 SWITCHES

Switches used in safety and arming devices must be small and rugged, must close (or open) in a specified time, and must remain closed (or open) long enough to do their job. Switches may be operated by setback, centrifugal force, impact, or other means.

A typical trembler switch (Fig. 7-1) is essentially a weight on a spring. When a munitions velocity changes, inertial forces cause the weight to deflect the spring so that the weight makes contact with the case. The switch shown has a current rating of 100 milliamperes and operates at accelerations of 40 to 100 g.

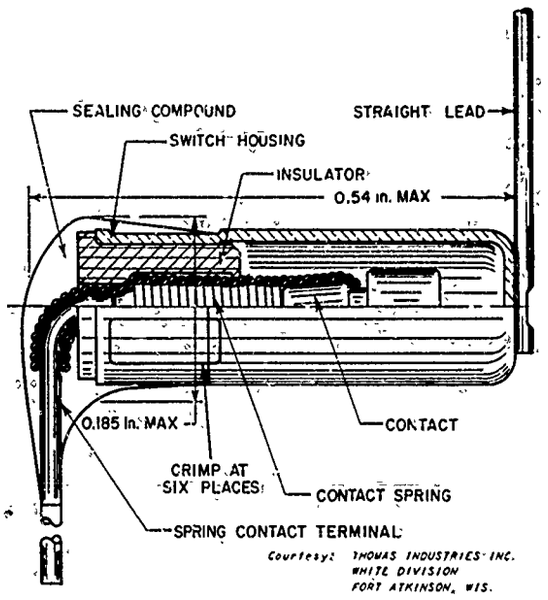

Figure 7-1. Trembler Switch

Fig. 7-2 shows a mercury-type centrifugal switch. As the munition spins about its axis, mercury in the right compartment penetrates the porous barrier to open the circuit. The switch has an inherent arming delay that depends on the porosity of the barrier. Mercury-type switches should not be used at temperatures below −40°F.

Heat generated in thermal batteries may be used to activate simple, reliable time delay mechanisms that permanently close an electrical circuit at some specified temperature. Performance of these devices as delay elements depends

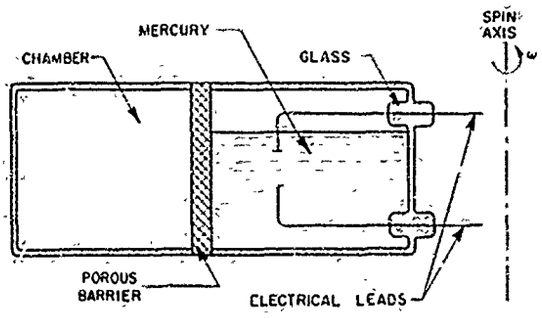

Figure 7-2. Switch for Rotated Fuzes

upon close control of the rate of heat transfer from the battery to the thermal switch. Their application is generally limited to relatively short time delays (up to a few seconds) in applications where high accuracy is not required. Two switches of this type are shown in Figs. 7-3 and 7-4[1]. These fuzible-link thermal switches are used to provide the electrical arming delay and the self-destruction delay in the M217 Hand Grenade Fuze. Both switches operate over an ambient temperature range of −40° to 125°F.

The arming delay switch, Fig. 7-3, closes within 1.0 to 2.4 sec after initiation of the thermal battery. The switch contains a cadmium-lead-zinc alloy disk having a melting point of about 280°F. This metal disk is adjacent to a larger Fiberglas disk, which is perforated with a number of small holes. When the metallic disk melts, the molten metal flows through the holes in the Fiberglas, bridging the gap between the contacts, and closing the switch. Coating the Fiberglas insulator with a wetting agent to improve flow of the molten metal gives more uniform switch closure.

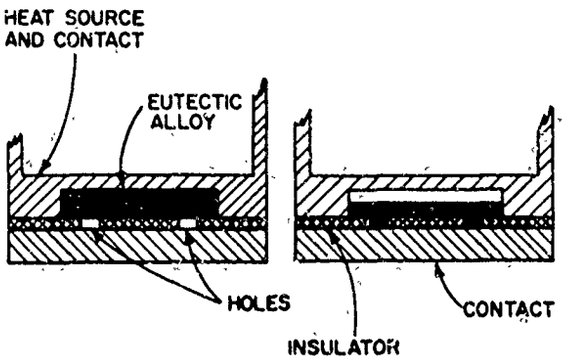

Figure 7-3. Thermal Delay Arming Switch

The self-destruction switch shown in Fig. 7-4 has an average functioning time of 4 to 6 sec. Closure times range from 3.5 sec at +125°F to 7.0 sec at −40°F. Its thermally-activated element is a pressed pellet of mercuric iodide, which has insulating characteristics at normal temperatures but becomes a good electrical conductor at its melting point, 500°F. More uniform switch closures are obtained by spring loading one of the switch contacts. This brings the contacting surfaces together sharply when the iodide pellet melts and reduces contact resistance in the closed switch to a few hundredths of an ohm.

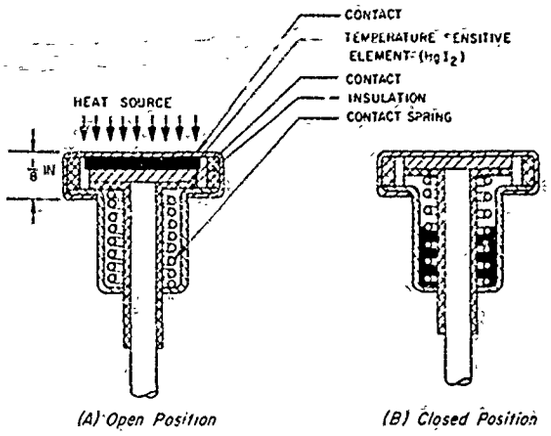

Figure 7-4. Thermal Delay Self-destruction Switch

Although other thermal-sensitive devices, such as bimetals, may be feasible for thermal switch applications, the fusible link appears to possess the advantages of simplicity, safety, and reliability. Its compactness and rugged design make it resistant to damage or malfunction caused by rough handling, shock, or vibration. There is also little variation in the temperature at which the switch closes because this is determined by the melting point of the fusible link. Bimetallic thermal switches must often be individually calibrated and adjusted, and thereafter may be subject to deformation or premature closure. Cost and size also favor the fusible-link design.

Ambient temperature variation can greatly affect the function time of a thermal switch. Care should be taken to install the switches so that their ambient temperature is kept as nearly constant as possible. The following precautions will aid in reducing the adverse effects of variations in ambient temperature:

(1) Place the thermal switch as close to the heat source as practicable.

(2) Minimize the mass of thermal switch components and of any components interposed between the heat source and the thermal switch.

(3) Use materials with low specific heat wherever possible.

It is also important to closely control the following other factors that influence performance:

(1) The quantity and calorific value of the heat producing material.

(2) Thermal insulation of the assembly.

(3) Manufacturing tolerance of components.

(4) Uniformity of assembly, including assembly pressure on components, intimacy of contact between mating surfaces, etc.

7-2.2 EXPLOSIVE MOTORS

An explosive motor, also called an explosive actuator, uses an electric initiator to provide a small controlled motion. It is a one-shot device. It is unique among the explosive components in that its output is not explosive. Just as in a conventional electric initiator, the electric input stimulus initiates release of explosive energy which is converted by the motor to mechanical force. The charge must produce sufficient gaseous products to deform the case as desired.

Two types of explosive motors are called dimple and bellows motors, as shown in Fig. 7-5. The motor is initiated, the explosive components burn to evolve gases, and the case deforms. Dimple motors have a travel of about 0.1 in. and deform faster than the bellows motors that expand about 1 in. Each is capable of producing forces up to about ten pounds.

Explosive motors may be used to move, lock, or unlock an arming device, or they may be used to operate a switch. Dimple motors are often used to close an electrical contact. An explosive switch is a packaged unit containing an explosive motor and a switch.

7-2.3 ELECTRONIC TUBES

The time lag from the time power is applied to the heater of a diode until electrical conduction through the tube takes place has been considered to delay arming. Delays of 4 to 60 sec are possible with commercial tubes of the heater-cathode type[2]. Delays of from 0.1 to 1 sec can be obtained with filament type tubes. Delays of

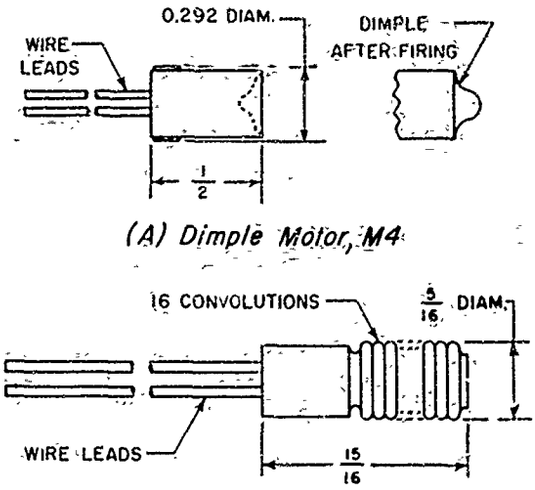

NOTE: ALL DIMENSIONS IN INCHES

Figure 7-5. Explosive Motors

this type are affected by high ambient temperatures, but circuits can be adjusted to correct for these variations.

7-2.4 ELECTRICAL GENERATORS

Small wind-vane-driven or air turbine-driven generators have been used in some bomb, rocket, and mortar fuzes to provide delay and electrical power for arming[1]. Generators eliminate the temperature and shelf life problems associated with batteries. For additional details, see par. 3-4.3.

7-2.5 RESERVE BATTERIES

Reserve batteries are those that have an inherent activation delay because the electrolyte is not in chemical or physical contact with the plates. Usually, an additional interval of time is required after the battery is formed before it attains its rated output. See par. 3-4.3.3 for more details about these batteries.

7-3 RC CIRCUITS

RC circuits provide arming delays in many fuze applications[3,4]. The circuits are simple, reasonably accurate, and economical. The desired delay interval may be easily set by varying the value of the resistor, capacitor, or charging

potential.

In simple delay systems, a battery is switched on at the start of the delay period to charge a capacitor through a resistor. In other systems, such as the Bomb Fuze System, M990, a tank capacitor is charged from the aircraft power supply[4]. The tank capacitor then charges a second capacitor through a resistor to obtain the desired delay.

Six types of RC delay circuit are discussed in this paragraph: the basic RC delay circuit, the tank capacitor RC delay circuit, the triode RC delay circuit, the three-wire RC delay circuit, the cascade RC delay circuit, and the Ruehlmann RC delay circuit. The equations for these circuits are based on the assumption that the capacitors have negligible internal leakage currents. For circuits used over wide temperature ranges, temperature variations of the leakage resistances, along with temperature variations of other circuit elements, limit the lengths of delays realizable in practice.

The simpler types of RC circuits have been used successfully for delays up to a minute under severe conditions. Cascade and three-wire differential circuits extend the delay range several fold. Under restricted conditions, RC delays of a few hours can be obtained.

7-3.1 BASIC RC DELAY CIRCUITS

Fig. 7-6 shows a simple RC delay circuit with its power supply. At the beginning of the operation, capacitor C is assumed uncharged. Switch S is closed to initiate charging and is kept closed during the timing operation. When potential E_c of capacitor C is lower than striking potential E_s of the diode D, current through the diode is about 10^{-13} ampere. This current is too low to fire a detonator in load L. When E_c equals striking potential E_s, the diode fires and permits a current through the load.

In terms of time t, measured from switch closure, potential E_c of capacitor C is given by

$$E_c = E_b \left(1 - e^{-t/RC}\right) \qquad (7\text{-}1)$$

and

$$t = RC \ln \frac{E_b}{E_b - E_c}, \text{ sec} \qquad (7\text{-}2)$$

where R is in ohm, E is in volt, and C in farad.

Eq. 7-2 gives the time t required for potential E_c to rise to diode striking potential E_s. By use of Eqs. 7-1 and 7-2, any one of the five parameters can be determined when the others are known.

7-3.2 TANK CAPACITOR RC DELAY CIRCUIT

In Fig. 7-7 tank capacitor C_1 is charged to potential E_b during the brief interval that switch S_1 is closed. In the Bomb Fuze, M990, this interval is about 10 msec[4]. If switch S_2 is permanently closed, delay begins when capacitor C_1 is charged. If switch S_2 is open at charging, delay begins when it is closed. Since charge flows from capacitor C_1 through resistor R to capacitor C_2, potential E_{c1} decreases while potential E_{c2} increases. The ratio C_1/C_2 must be considered in determining the charging potential E_b because, at the end of the desired delay, potential E_{c2} must reach the value E_s at which diode D strikes to initiate operation of load L.

In terms of time t, measured from the initiation of the delay, potential E_{c2} is given by

$$E_{c2} = \frac{C_1}{C_1 + C_2} E_b \left(1 - e^{-t/T}\right) \qquad (7\text{-}3)$$

and

$$T = \frac{RC_1C_2}{C_1 + C_2} \qquad (7\text{-}4)$$

T is the time constant of the tank circuit, in this case the time at which E_{c2} equals approximately 0.42 E. Eq. 7-3 can be solved to give the time t required for capacitor C_2 to reach some predetermined value $E_{c2} = E_s$:

$$t = \left(\frac{RC_1C_2}{C_1 + C_2}\right) \ln \left(\frac{E_b}{E_b - \frac{C_1 + C_2}{C_1} E_{c2}}\right), \qquad (7\text{-}5)$$

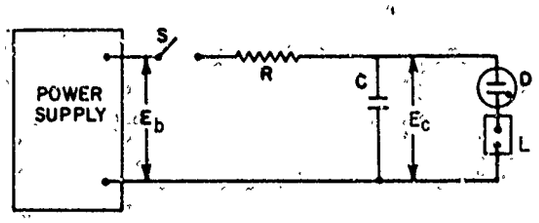

Figure 7-6. Basic RC Delay Circuit

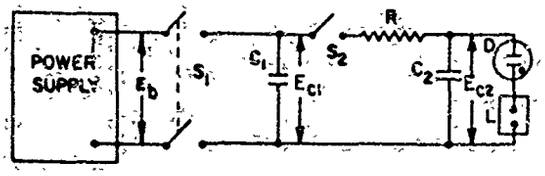

Figure 7-7. Tank Capacitor RC Delay Circuit

7-3.3 TRIODE RC DELAY CIRCUIT

In Fig. 7-8, capacitor C is charged through resistor R. Potential E_c of capacitor C at time t, measured from closure of switch S_1, is given by Eq. 7-1, and the time required for capacitor C to attain any potential E is given by Eq. 7-2.

When potential V reaches the required plate potential of the triode and switch S_2 is closed, application of a suitable signal to the grid of the triode causes it to conduct. Capacitor C discharges through load L to initiate the desired operation.

This circuit is used in the arming system of some proximity fuzes. Switch S_1 may be omitted if a reserve battery is activated at bomb release. Switch S_2 may be omitted or it may be closed by an auxiliary arming system at the end of its delay. When delays of both arming systems are completed, a signal to the triode grid fires the triode.

This circuit may be used as a two-event arming system. The first event closes switch S_1 or activates the battery source. When capacitor C is charged to the required plate potential of the triode, the second event triggers the triode. Load L is an explosive switch or explosive motor that aligns the explosive train, closes functioning circuits, or performs other operations to complete the arming.

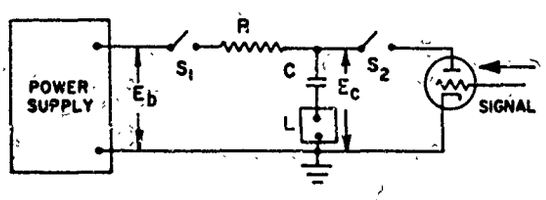

Figure 7-8. Triode RC Delay Circuit

7-3.4 THREE-WIRE RC DELAY CIRCUIT

In Fig. 7-9, capacitors C_1 and C_2 are charged to different potentials E_{b1} and E_{b2} by a brief closure of switch S_1. Potential E_{b2} may be either higher or lower than potential E_{b1}, but the difference between E_{b1} and E_{b2} must be less than striking potentials E_s of diode D. Also, E_{b1} must be higher than E_s.

Potential E_{c1} of capacitor C_1 remains at the constant value E_{b1}. When switch S_3 closes, capacitor C_2 discharges through resistor R. At the end of a delay t, potential E_{b2} finally drops to such a value that the potential ($E_{c1} - E_{c2}$) across diode D reaches its striking potential E_s. The diode then fires and initiates the desired operation of the load.

Potential E_{b2} of capacitor C_2 is given by

$$E_{c2} = E_{b2}\ e^{-t/RC_2} \tag{7-6}$$

Diode D striking potential E_s at the end of delay t is given by

$$E_s = E_{c1} - E_{c2} = E_{b1} - E_{b2}\ (e^{-t/RC_2}) \tag{7-7}$$

When this equation is solved for delay t

$$t = RC_2\ ln \frac{E_{b2}}{E_{b1} - E_s} \tag{7-8}$$

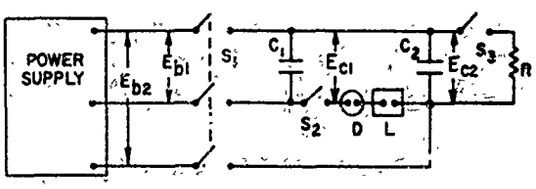

Figure 7-9. Three-wire RC Delay Circuit

Figs. 7-10 and 7-11 show the discharge behavior of this circuit. In Fig. 7-10, E_{b2} is higher than E_{b1}; in Fig. 7-11, E_{b2} is lower than E_{b1}. In either case, diode D strikes when potential E_{c2} falls to the value of $E_{b1} - E_s$.

This circuit has less variation in delay with variation in temperature than the circuits mentioned previously, particularly if E_{b2} is higher than E_{b1}. Both capacitors leak more at higher temperatures, but the potential drops of the two capacitors caused by this leakage tend to compensate each other. When the diode finally fires, the difference in potential between the two capacitors is caused mainly by the decrease in potential E_{c2} of capacitor C_2 from discharge through resistance R.

S_2 is a safety switch that is open at the beginning of arming to prevent prefiring in case

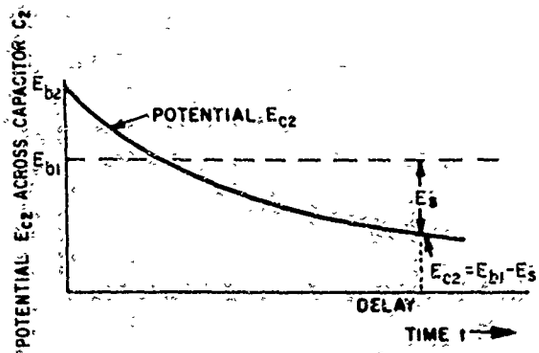

Figure 7-10. Discharge Curve for Capacitor C_2 ($E_{b2} > E_{b1}$)

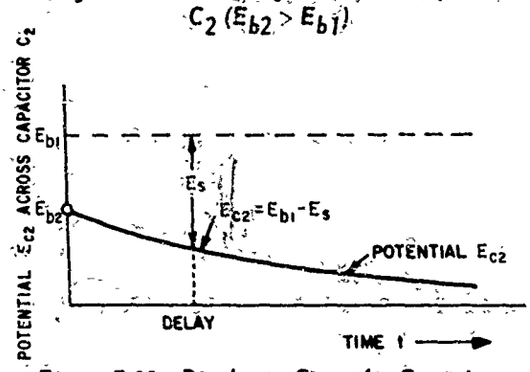

Figure 7-11. Discharge Curve for Capacitor C_2 ($E_{b2} < E_{b1}$)

switch S_1 does not close both circuits at the same instant or if there is a break in the circuit which would prevent one capacitor from charging.

7-3.5 CASCADE RC DELAY CIRCUIT

Fig. 7-12 shows an extension of the basic RC delay circuit (par. 7-3.1) to lengthen delays several fold, while using components of comparable values. Delay begins when switch S_1 is closed. The switch is kept closed throughout the operation of the system.

The solution is simplified if

$$R = R_1 = R_2 \text{ and } C = C_1 = C_2$$

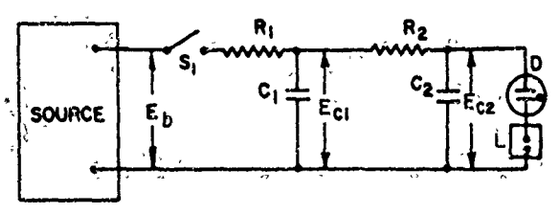

Figure 7-12. Cascade RC Delay Circuit

The value of potential E_{c2} reached at time t after switch closure is given by

$$E_{c2} = \frac{2E_b}{RC\left(\frac{3C}{4R} - 1\right)^{1/2}} \left[e^{-at}\left(e^{bt} - e^{-bt}\right)\right] \quad (7\text{-}9)$$

where

$$a = \frac{3}{2RC} \qquad b = \frac{1}{RC}\left[\frac{3C}{4R} - 1\right]^{1/2}$$

In Fig. 7-13, tank capacitor C_T is added to provide instantaneous charging. Switch S_1 is closed for a period of less than 1 sec to charge capacitor C_T to potential E_b. Delay starts when switch S_2 is closed. The switch remains closed for the duration of the delay operation. Since the potential of tank capacitor C_T falls as charge leaks to capacitors C_1 and C_2, the delays are longer than those using the circuit of Fig. 7-12.

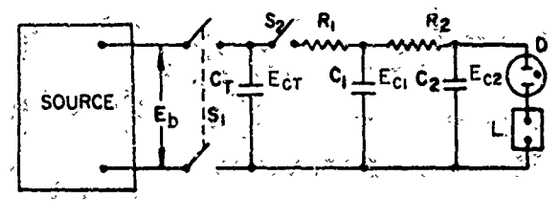

Figure 7-13. Cascade RC Delay Circuit With Instantaneous Charging

7-3.6 RUEHLMANN RC DELAY CIRCUIT

Three tank capacitors give the Ruehlmann circuit advantages over simpler RC circuits. The diode striking potential, on which RC delay accuracy depends, is stabilized immediately before delay begins. Therefore, wide power supply variations can be tolerated.

7-3.7 TWO-DIODE RUEHLMANN CIRCUIT

Fig. 7-14 shows a circuit that gives accurate delays from 10 to 20 sec. This wide range is obtained by varying charging potential E_4. Variation of E_4 in this circuit is permitted by the charging diode D_2.

Resistances R_b and R_a are set for the desired delay. The ratio of E_4 to E_1, on which delay depends, then remains constant even though supply potential E_b may vary.

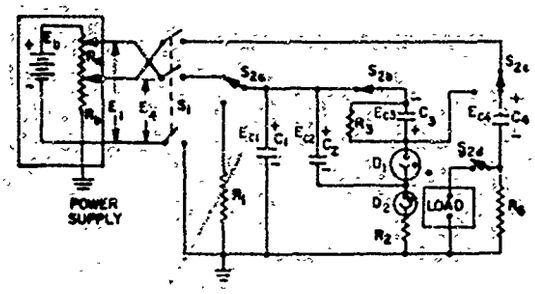

Figure 7-14. Two-diode Ruehlmann Circuit

Capacitors C_1, C_2, and C_4 are charged during a brief closure of switch S_1. Capacitor C_2 is charged through diode D_2 to a potential ($E_1 - E_{c2}$), where E_{c2} is the extinction potential of diode D_2. Capacitor C_2 then discharges through diode D_1, resistor R_3, and capacitor C_3 until potential E_{c2} equals ($E_{s1} - \Delta E$), where E_{s1} is diode D_1 striking potential. If $C_3 \ll C_2$ ΔE may be of the order of 10 millivolts. The parameters of the diodes, and potentials E_1 and E_4 must be chosen so that the potential across diode D_2 does not again reach the striking potential. The resistance of diode D_2 can be considered infinite after extinction. The relaxation operation is completed in about 0.25 sec.

Delay begins when the gang switch S_2 closes the series circuit shown in Fig. 7-14 giving the circuit shown in Fig. 7-15. The initially higher potential $V_1 = E_1$ opposes the sum of potentials V_2 and V_4. Potential $V_4 = E_4 = kE_1$, where k is a function of resistances R_a and R_b. Potential E_{c1} at time t is $E_{c1} = E_1 e^{-t/R_1C_1}$. As stated previously, $E_{c2} = (E_{s1} - \Delta E)$. During the period that potential V_1 is high enough to dominate the series circuit but not high enough to cause diode D_1 to strike, terminal m of the diode is at a higher potential than terminal n, and the sum of potentials in the circuit is

$$E_{c1} - E_{c2} - E_{c4} - E_{T1} = 0 \quad \text{(current assumed zero)}$$

Finally, potential E_{c1} drops to the point at which E_{T1} equals zero, and with further decreases of E_{c1} terminal m of diode D_1 becomes more and more negative. At the potential $E_{T1} = E_{s1}$, the tube fires, and

$$E_{c1} - E_{c2} - E_{c4} + E_{s1} = 0 \qquad (7\text{-}10)$$

or, on substitution of values

$$E_1 e^{-t/R_1C_1} - (E_{s1} - \Delta E) - kE_1 + E_{s1} = 0 \qquad (7\text{-}11)$$

Then

$$E_1 e^{-t/R_1C_1} = kE_1 - \Delta E \qquad (7\text{-}12)$$

from which

$$e^{-t/R_1C_1} = \left(k - \frac{\Delta E}{E_1}\right) \qquad (7\text{-}13)$$

and

$$t = -R_1C_1 \ln\left(k - \frac{\Delta E}{E_1}\right) \qquad (7\text{-}14)$$

When ΔE is negligible with respect to E_1, Eq. 7-14 very nearly equals

$$t = R_1C_1 \ln\left(\frac{1}{k}\right) \qquad (7\text{-}15)$$

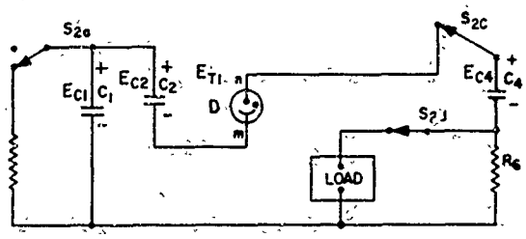

Figure 7-15. Circuit After Closure of Switch S_2

7-3.8 SINGLE-DIODE RUEHLMANN CIRCUIT

The single-diode circuit shown in Fig. 7-16 compares in performance with the two-diode circuit of Fig. 7-14 except that a smaller variation range of charging potentials can be tolerated. This circuit is particularly suited to applications in which the leakage resistance R_1 can be adjusted to vary the delay.

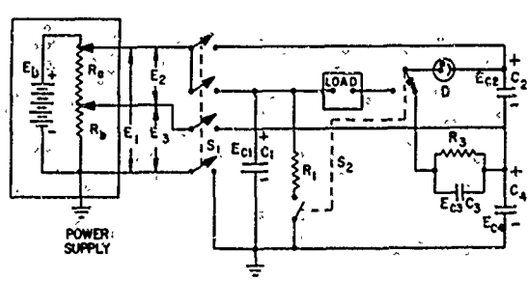

Figure 7-16. Single-diode Ruehlmann Circuit

Capacitors C_1, C_2, and C_4 are charged during closure of switch S_1. After discharge of capacitor C_2 through D_1, R_3, and C_3, switch S_2 is thrown to initiate the delay by establishing a series circuit similar to that shown in Fig. 7-15. Equations developed for the two-diode circuit apply to the single-diode circuit also. When other parameters of the circuit are fixed, R_1 can be found from Eq. 7-14 to give the desired delay

7-3.9 ACCURACY OF RC DELAYS

Delay errors are due primarily to errors in measured value of components and variation of diode striking potential. The delay error is expressed as a fraction of the desired delay time, $\Delta t/t$. By summing all the errors due to component tolerances, there results a maximum possible error. The probable fractional error would be the square root of the sum of the squares

$$\frac{\Delta t}{t_{max}} = \frac{\Delta R}{R_{max}} + \frac{\Delta C}{C_{max}} \cdots \qquad (7\text{-}16)$$

$$\frac{\Delta t}{t_{probable}} = \sqrt{\left(\frac{\Delta R}{R_{max}}\right)^2 + \left(\frac{\Delta C}{C_{max}}\right)^2} \cdots \qquad (7\text{-}17)$$

The methods of calculating errors are now illustrated with the Ruehlmann circuits. The fractional error is computed by differentiating Eq. 7-14 with respect to each parameter. In each case, an equation is obtained of the form $\frac{\Delta t}{t} = M_F \frac{\Delta F}{F}$ The term F represents any one of the parameters. Table 7-1 contains formulas for determining delay errors of Ruehlmann circuits due to errors in component values.

Table 7-1 also contains the formula to determine the delay error due to variation in striking potential. The formula is derived from Eq. 7-11 by substituting $E_{s1} + \Delta E$ (the actual potential at the time of firing) and $t + \Delta t$ (the actual time of firing) for E_{s1} and t, respectively, and solving for $\Delta t/t$.

For a circuit using a diode of fixed striking potential, the delay may be adjusted by varying either charging potential E or one or more of the capacitors or resistors. An analysis of the equations governing delay-error theory points out that a much greater delay range can be obtained by varying the charging potential.

The charging potential can be varied by suitable charging gear. Capacitance and resistance values can be changed directly, or controlled remotely by applying radio-frequency pulses from control equipment to explosive transfer switches in the fuze. Resistors required for such a switching system are inexpensive and take little space.

TABLE 7-1. FRACTIONAL ERROR RELATIONS FOR THE RUEHLMANN CIRCUIT

Type of Error	*Parameter, F*	*Multiplying Factor, M_F*	*Error Equation*
Component Errors	R_1	1	$\frac{\Delta t}{t} = 1 \frac{\Delta R_1}{R_1}$
	C_1	1	$\frac{\Delta t}{t} = 1 \frac{\Delta C_1}{C_1}$
	k	$\frac{1}{\ln k}$	$\frac{\Delta t}{t} = \frac{1}{\ln k} \frac{\Delta k}{k}$
Variation of Striking Potential	E_{s1}	$\frac{-1}{k \ln k}$	$\frac{\Delta t}{t} = \frac{-1}{k \ln k} \frac{\Delta V}{E_1}$

REFERENCES

a-t Lettered references are listed at the end of this handbook.

1. *Notes on Development Type Materiel: T1012 Electric Impact and Time Fuze for Hand Grenade (U)*, U.S. Army Harry Diamond Laboratories, Report TR 649, Washington, D.C., 17 October 1958 (Confidential).
2. R. E. Rouse, *Thermal Time Delay*, National Bureau of Standards, NBS Report 17-189 Washington, D.C., September 1953.
3. H. B. Smith, *A Summary of Mechanical and Electrical Safety and Arming Devices (U)*, U.S. Army Harry Diamond Laboratories, Washington, D.C., Report TR-311, 1 November 1956 (Confidential).
4. J. W. Utecht, et al., *Development of T905E1 and T905E4 Electric Bomb Fuzes (U)*, U.S. Army Harry Diamond Laboratories, Report TR-159, Washington, D. C., 15 April 1955 (Confidential).

CHAPTER 8
OTHER ARMING DEVICES

8-1 GENERAL

While mechanical and electrical approaches are the most used arming techniques at the present time, there are other devices that can be used in arming systems. These include fluid, chemical, and motion-induced arming devices. These additional devices are useful primarily in providing the arming delay that is necessary to permit safe mechanical separation.

8-2 FLUID DEVICES

8-2.1 FLUID FLOW

Matter is fluid if the force necessary to deform it approaches zero as the velocity of deformation approaches zero. Both liquids and gases are classed as fluids. Their distinguishing characteristic concerns the difference in cohesive forces: gases expand to fill any volume; liquids coalesce into the lower regions of the volume with a free surface as their upper boundary. In addition to true fluids, there are certain materials such as tiny glass beads or greases and pastes which, while technically not fluids, behave very much like fluids. These pseudofluids are frequently useful under particular circumstances.

In general, fluid-operated devices can be used to transfer motion with an amplified force or displacement, provide arming or functioning delays, and program events for complex devices. The field of fluid mechanics is large and complex but well covered in standard texts[1,2].

8-2.2 FLUERICS

8-2.2.1 Fluidic and Flueric Systems

While the use of fluid devices with few or even no moving parts can be traced back to ancient history, it is only in recent years that a specialized technology has grown making extensive use of such devices. This technology is now designated by two names: (1) *Fluidics* - the general field of fluid devices and systems with their associated peripheral equipment used to perform sensing, logic, amplification, and control functions; and (2) *Fluerics* - the area within the field of fluidics, in which fluid components and systems perform sensing, logic amplification, or control functions without the use of any moving parts. The terminology, symbols, and schematics used with flueric systems are contained in a proposed MIL-STD[3].

The application of flueric techniques to fuze arming systems is in its infancy. However, a start has been made to apply these devices to fuze design[4-9]. Much of the original research and development was concerned with the invention and improvement of flueric components. Present programs are more and more concerned with the development of complete flueric systems with increasing numbers of the individual components being available off-the-shelf. However, the fuze designer will still find it necessary to have some of his components specially developed. Present technology predicts that many of the control and sensing functions, now primarily in the domain of electronics or other nonfluid power techniques, can be accomplished by flueric systems. In fact, flueric analogues exist for most electronic devices.

8-2.2.2 Flueric Components Used for Arming

In a typical electronic fuze timer, the fundamental components are an oscillator and a binary counter. A flueric timing system can be built up in the same manner. In a present flueric timer, the oscillator consists of a proportional fluid amplifier with modified sonic feedback loops coupled to a digital fluid amplifier. Fig. 8-1[8] is a diagram of the amplifiers. The digital amplifier, as do many flueric devices, depends upon entrainment in which a stream of fluid flowing close to a surface tends to deflect towards that surface and, under proper conditions, touches and attaches to the surface. The attachment of the stream to the surface is known as the Coanda effect. The proportional amplifier uses the principle of jet momentum interaction where one stream is deflected by another.

The digital amplifier (Fig. 8-1 (A)) consists of a fluid power supply S, two control ports C_A and C_B, two attachment walls W_A and W_B, and two

output ports O_A and O_B. The output ports serve as conduits for directing fluid pulses to the succeeding element in the fluid circuit. In this device, a gas supply S of constant pressure is provided to form a jet stream through nozzle N. The jet stream will entrain fluid from the space between the stream and the wall, lowering the pressure. The higher atmospheric pressure will force the stream against the wall. The geometric configuration of the fluid amplifier can be constructed in such a manner that the jet stream will always attach itself to one preferred wall. This is accomplished by placing the preferred wall at a smaller angle with the centerline of the flow of the jet stream than the nonpreferred wall.

The figure shows a jet stream attached to wall W_B and an output jet stream from output conduit O_B. If it is desired to provide an output jet stream from conduit O_A, a control jet stream to control conduit C_B will cause the main jet stream to become detached from wall W_B. Entrainment on the opposite side will cause the jet to switch over to become attached to wall W_A. The physical relationship which occurs in accomplishing the switching functions is that of momentum interaction between the control jet stream at C_B and the main jet stream at right angles to each other's direction of flow. The fluid amplifier is properly called an amplifier because the switching of the main jet stream which has high momentum can be accomplished by a control jet stream with relatively low momentum. The ratio of momenta or gain of an amplifier can be as high as 20 or above, depending on design requirements. The higher the gain, the less stable the attachment of the jet stream to the attachment wall.

The proportional fluid amplifier (Fig. 8-1(B)) has no attachment walls. The main jet stream flows in a symmetrical pattern through the nozzle to the vent so that no output is provided at either conduit O_A or O_B when there is no control jet stream in either conduit C_A or C_B. When a control jet stream is applied at C_B, the main jet stream will be deflected toward output conduit O_A in proportion to the momentum of the control jet stream. Correspondingly, the output jet stream through conduit O_A will be proportional to the deflection of the main jet stream. In a similar manner, an output jet stream in conduit O_B will be caused by a control jet stream in conduit C_A.

A fluid oscillator can now be made up of a fluid circuit using these two components as

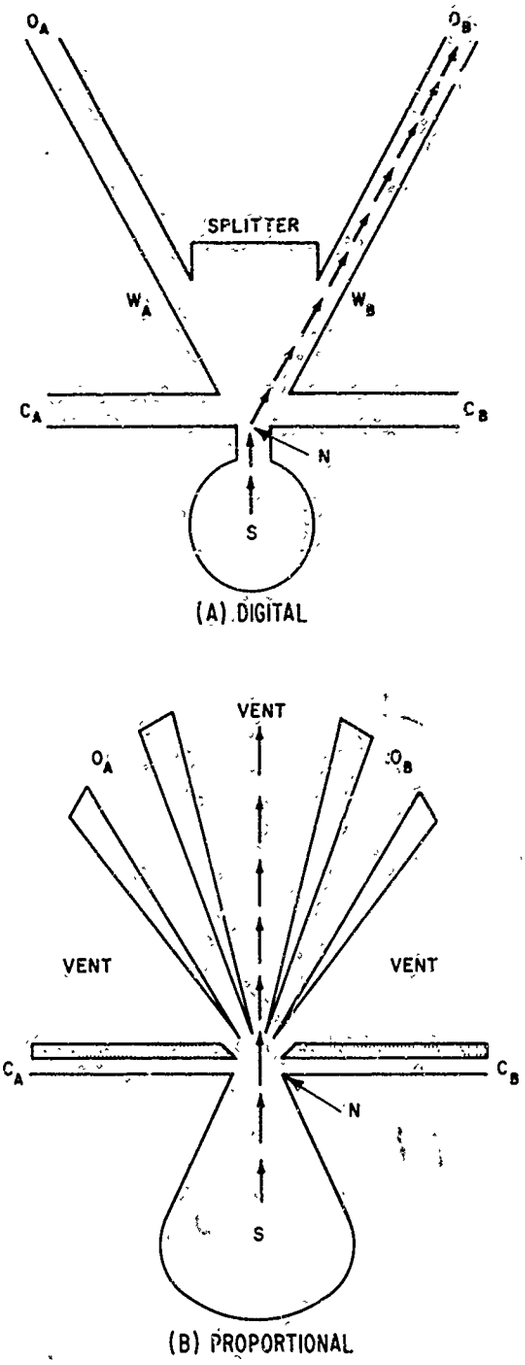

Figure 8-1. Schematic of Flueric Amplifiers

shown in Fig. 8-2[8]. The lower portion of the circuit consists of a proportional amplifier having sonic feedback paths P_A and P_B connected from the proportional amplifier's outputs O_A and O_B to its control ports C_A and C_B. The purpose of the sonic feedback paths is to make the main jet stream oscillate from one output port to the

other. The rate of oscillation depends on the speed (sonic velocity) at which the portion of the output jet stream travels through the feedback path back to interact with the main jet stream, causing it to deflect to the opposite output port. For example, when the jet stream is deflected to O_A of this proportional amplifier, the portion of the jet stream in the feedback path P_B which is causing the deflection then becomes zero. However, the main jet stream being deflected over to O_A now provides an output to path O_A and feedback path P_A. Part of this output is now diverted back along P_A to interact with the main jet stream, causing the main jet stream to oscillate to the opposite side. The frequency of the oscillation is directly proportional to the velocity (speed of sound) of the outputs in the feedback paths.

The outputs of the proportional amplifier in Fig. 8-2 drive a digital amplifier so that the outputs from the proportional amplifier are connected directly to the control ports of the digital amplifier. In this manner, the main jet stream of the digital amplifier is switched to follow the oscillations of the proportional amplifier. The purpose of connecting the two types of amplifier in tandem is to provide an oscillator (the combination) which has an oscillating frequency that is relatively insensitive to variations in the common supply pressure ($S_P - S_D$) The proportional amplifier will inherently increase its oscillating frequency with increasing pressure, and the digital amplifier will decrease its switching frequency with increasing pressure. In addition, a small degree of compensation for temperature variation is obtained with the combinations. As a result, variations in the frequency of oscillation are ±10 percent for variations in pressure from 6 to 18 psig and temperature variations from −65° to 165°F.

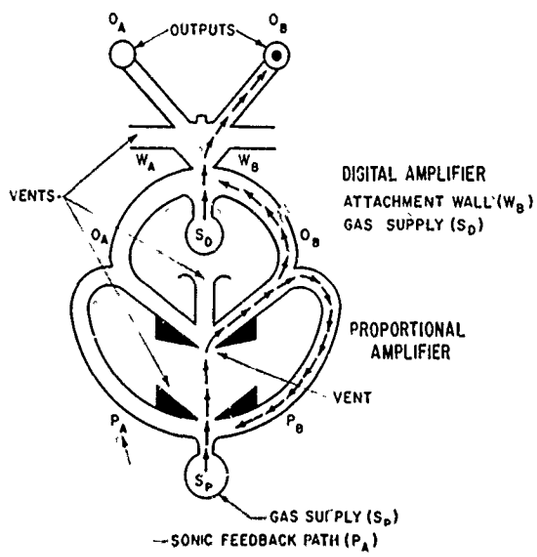

Figure 8-2. Schematic of Flueric Pressure-compensated Oscillator

Although the accuracy of this oscillator is sufficient for some safing and arming applications, other applications often require a greater degree of accuracy, particularly over the above military temperature range. An oscillator, which is insensitive to both pressure and temperature variations is described in par. 8-2.2.3. This oscillator, which utilizes an R-C-R (resistance-capacitance-resistance) feedback network, exhibits frequency variations of less than ±1% over the above pressure and temperature ranges. Even greater accuracies may be achievable with simple moving part types of oscillators.

The binary counter or frequency divider for the timer can be built up from a number of flip-flop stages. A complete counter stage is shown in Fig. 8-3[8]. The ports $P_{A(W)}$ and $P_{B(W)}$ are used to preset the counter. If this were the first stage after the oscillator, then the outputs from the oscillator would be connected to the two control ports $I_{A(B)}$ and $I_{B(B)}$ of the buffer amplifier. This would cause the main jet stream of the buffer amplifier to switch back and forth between its two attachment walls at the same frequency as the oscillator. One output of the buffer amplifier is vented so that pulses are supplied to input I_W of the Warren loop at half the frequency of the oscillator. The outputs $O_{A(W)}$ and $O_{B(W)}$ of the jet stream of the counter are connected to the two control ports of the buffer amplifier of the second stage in the same manner as the outputs of the oscillator are connected to the first stage. Similarly, the second stage is connected to the third stage, and so on until the last stage.

The operation of the counter is as follows; A jet stream of gas, supplied by pressurized gas from power supply S_W, is caused to flow through the orifice and will attach itself to one of the walls. Fig. 8-3 shows the stream attached to wall $W_{A(W)}$ after being switched by the buffer amplifier signal applied at input I_W. When the buffer amplifier signal is removed from input I_W a partial vacuum will now be formed at the attachment wall $W_{A(W)}$ (Bernoulli's principle), causing

an entrainment flow of gas from the control port of the wall $W_{A(W)}$ around the Warren loop in a clockwise direction. When a signal from the buffer amplifier is reapplied at I_W it follows the preferred direction setup in the Warren loop (clockwise) and causes the main stream to switch to $O_{B(W)}$. When the buffer amplifier signal is removed, the entrainment flow in the Warren loop will reverse to a counterclockwise direction. The buffer amplifier signal, when reapplied, will be directed around the Warren loop in a counterclockwise direction and switch the main stream back to $O_{A(W)}$, as shown in Fig. 8-3.

Each counter stage receives pulses at a specific frequency, divides that frequency by two, and provides pulses at this reduced frequency to the next counter stage which, in turn, repeats the operation. For example, the first counter stage receives an input of 640 pulses per second from the oscillator. It divides this frequency by two, producing an output of 320 pulses per second which are provided as input to the second stage of the counter. The second stage similarly provides pulses to the third stage at a frequency of 160 pulses per second, and so on.

While other devices are required and are being

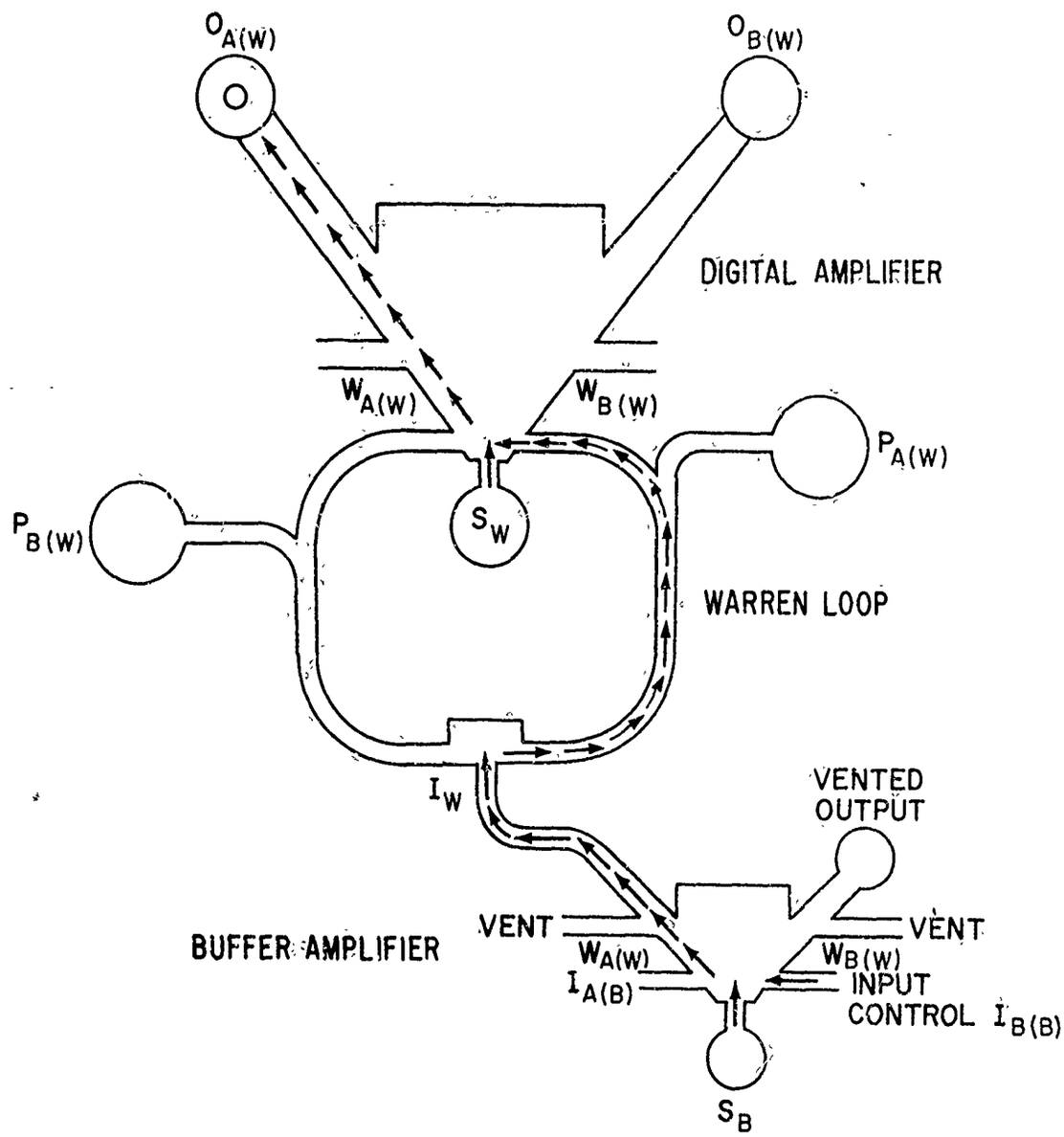

Figure 8-3. Schematic of Fluveric Counter Stage

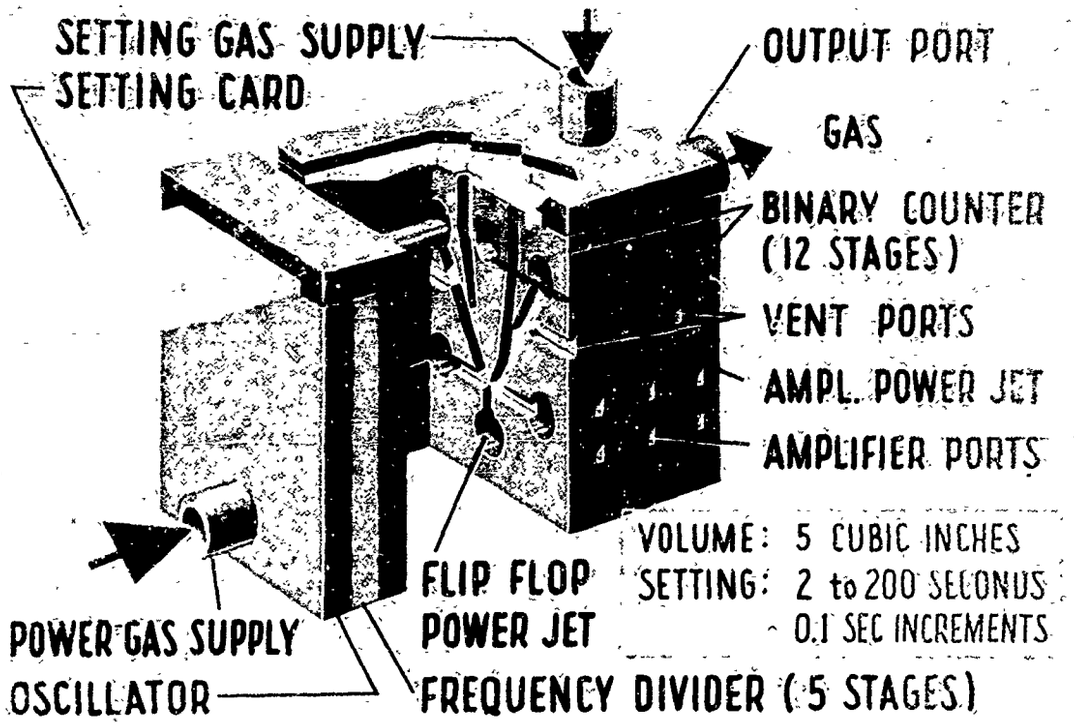

Figure 8-4. Flueric Timer

developed for a complete arming system, those discussed above are the basic building blocks. Fig. 8-4[8] shows a timer constructed from units of this type while Fig. 8-5[8] shows sample elements used. The oscillator of this timer has a frequency of 640 pulses per second. The oscillator is followed by 18 counter stages. However, the first 5 stages are not settable and act as a frequency divider. The last stage is always set one way because, when it switches, it delivers its output to whatever function the timer is to trigger. In between these two end packages are 12 settable binary counter stages. The counter can be built up so that if n counters are connected in series, the output frequency of the final stage is reduced by a factor of 2^n over the frequency provided to the first stage by the oscillator. Therefore, if the frequency of the pulses provided by the oscillator to the first stage is 640 pulses per second, the frequency of pulses supplied by the seventeenth stage to eighteenth stage, causing the eighteenth stage to provide an output, is 640 divided by 2^{17}, or 0.0048828125 pulse per second, or approximately 200 seconds per pulse. The 12 settable stages can be set by means of a card which allows a preset signal to be applied to the desired control ports and blocks the preset signal from the remaining ports. Any time from 2 to 200 seconds can be preset, in this manner, in 0.1-second increments.

The volume of the flueric system is 5 in.^{3} of which the timer (1/2 × 3/4 × 1-1/4 in.) accounts

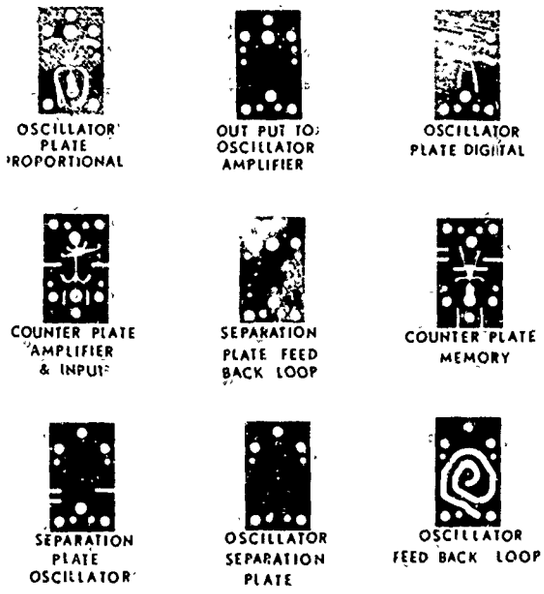

Figure 8-5. Sample Flueric Timer Elements

for about 1/2 in^3 while air supply system occupies the rest of the space.

8-2.2.3 Relaxation Oscillator

A relaxation oscillator (Fig. 8-6)[9] is basically an R-C-R feedback type; some of the fluid from the power jet is returned to the control port through the feedback network causing the unit to oscillate. The amount of fluid entering the capacitance is determined by the resistance R_1, placed in the upper portion of the capacitance, and the fluid leaving it by the resistance R_2, located at the bottom of the capacitance. Hence, R_1, R_2, and the capacitor volume determine the filling time of the capacitance, which will in turn determine the frequency of the oscillator.

The oscillatory mode is excited only for pressure ratios for which the jet spreads to occupy the full width of the output channel. This is necessary to achieve a feedback process that will induce oscillation. The spreading of the power jet is a function of the input pressure and the pressure of the field into which it is operating. If the pressure at the output of the oscillator is atmospheric, a high pressure at the input is required to achieve the pressure ratios necessary for oscillation. Such behavior is normal and is characteristic of jet flow.

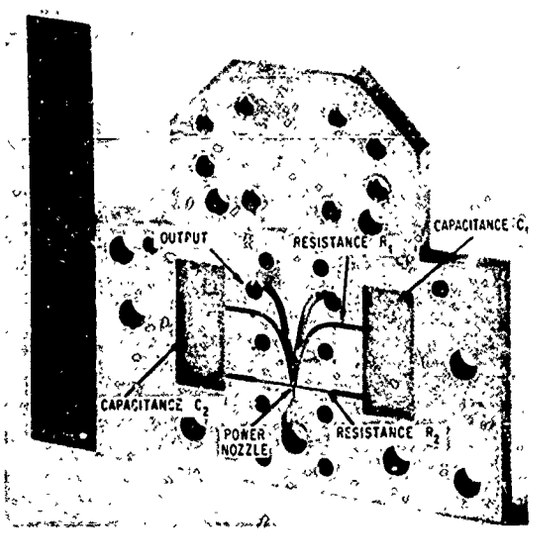

Figure 8-6. Flueric Relaxation Oscillator

In this particular case, the oscillator exhausts into a binary device (Fig. 8-7)[9] which has a pressure below ambient in its interaction region. The amplifier control area sets a fixed load on the oscillator output which causes a back pressure. The back pressure induces the oscillator power jet to spread and forces a portion to feed back into the R-C-R network initiating oscillations.

The binary amplifier and the oscillator have a common supply so that a change of input pressure in one is accompanied by a change in the other. This action is needed because some of the increase in flow through the oscillator nozzle is conveyed to the lower pressure region in the binary amplifier control ports.

In addition, the binary amplifier is provided with a set of bleeds, located in the separation region. The function of the bleeds is to exhaust any increase in back pressure that arises when the amplifier is loaded. The binary amplifier is used as a buffer because an appreciable gain is needed to amplify the oscillator output.

The compensation in the network takes place as follows: As the temperature rises, the resistance of the network increases, causing the bias flow to diminish. If this increase in resistance were the only change in the network, the frequency of oscillation would drop. However, the tank capacitance decreases with higher temperature with a consequent rise in frequency. Hence by adjusting the size of the resistances and volume of the capacitance so that one compensates the other, temperature insensitivity can be achieved. Pressure independence is achieved in a similar manner. With proper design, temperature and pressure insensitivity can be achieved simultaneously. As a result, variations in the frequency of oscillation are ±1 percent for variations in the frequency of 30 psig and temperature variations from −65° to 200°F.

8-2.2.4 Arming Considerations

The size limitations that fuze arming devices place upon the designer create a special problem with respect to flueric systems, namely, the problem of the power source. To drive a flueric system, one must have a reservoir of fluid of sufficient size to deliver the proper amount of fluid for the desired period of time. Most of the present thinking has resulted in the use of self-contained pressurized gas bottles. If times are short and space is not too critical, then gas bottles are a valid solution. If times are longer and space problems are critical, small volumes must be used with the fluid at high pressure. Since operating pressures for typical miniature flueric

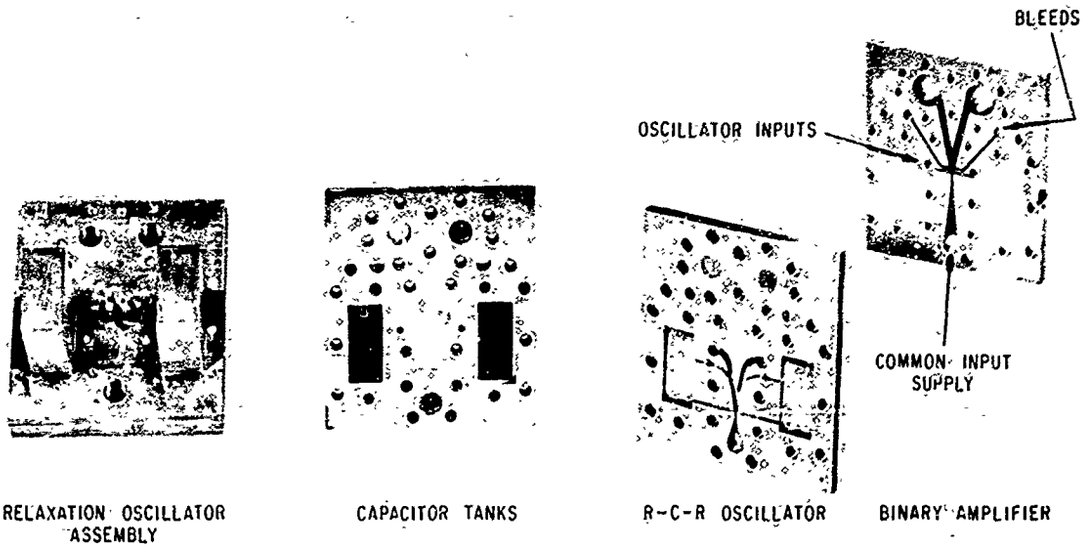

Figure 8-7. Flueric Relaxation Oscillator and Digital Amplifier

devices are 1/2 to 20 psi, rather sophisticated pressure regulating equipment would then be required.

One of the more promising possibilities for military applications is to make use of ram air after the projectile starts moving. This source of energy will be widely used within the atmosphere on projectiles with velocities in excess of 400 ft per sec.

Table 8-1[10] compares the fluidic approach with the other logic and control techniques. Problems still remain in fluid systems, but the promises of flueric systems appear to outweigh their problems and to offer an effective timing and control mechanism for fuze application.

8-2.3 PNEUMATIC DELAY

Arming delays can be achieved using the principle of a fluid dashpot. Industrial dashpots often use oil in a piston-cylinder arrangement where the oil is bled through a small orifice or through a porous member. Oil dashpot units cannot be applied to fuzes because of leakage problems and variations in time with temperature. When air is the fluid, leakage is eliminated, and viscosity changes can be minimized by various design features.

8-2.3.1 External Bleed Dashpot

Fuze, XM717 is one of a family of single-action, superquick mortar fuzes that has a slider assembly which provides for an arming delay after firing. The delay, 1-1/2 to 6 sec, is achieved by an external bleed dashpot[11]. The fuze is shown in Fig. 8-8[12]. After the setback pin (not shown in this view) has moved rearward and the bore-riding pin *(G)* has been ejected, the slider *(F)* is driven into the armed position by a music-wire spring. However, slider motion is retarded by the cap assembly. This assembly consists of aluminum cap *(R)*, aluminum plug *(S)*, and a sintered monel alloy restricter *(T)*. A rubber O-ring *(U)* is fitted on the slider to provide a seal so that air can pass only through the restricter. A plastic disk covered with pressure-sensitive tape *(V)* protects the restricter during shipping.

The present design was empirically developed for interim use due to the need of mortar fuzes with a delay function to provide for the safety of mortar crews. Additional developmental work is required to improve its storage and temperature characteristics.

8-2.3.2 Annular Orifice Dashpot

An annular orifice dashpot is shown in Fig. 8-9[13]. The "orifice" is the minute clearance between piston and cylinder. By selecting materials for piston and cylinder having different thermal coefficients of expansion, the orifice will change with temperature, thus affording a means of approaching a constant flow in spite of air viscosity changes with temperature[14]. A glass cylinder can be accurately produced and the piston can be

TABLE 8-1. COMPARISON OF FLUIDICS WITH OTHER LOGIC TECHNIQUES

Characteristics	*Fluidics*	*Electrical Relays*	*Solid State Electronics*	*Integrated Circuits (electronic)*	*Conventional Hydraulics*	*Conventional Pneumatic Logic*	*Mechanical Systems*
Size	small, miniaturization capability	about the same as current technology in fluidics	smaller than current fluidics - potential about same	will always be smaller than fluidics	always larger than fluidics	larger - ultimately much larger than fluidics	always larger
Moving Parts	none	requires moving parts	none	none	always moving parts	always moving parts	always moving parts
Temperature Effects	not affected by temperature	damaged by high temperatures	damaged by high temperatures	damaged by high temperatures	could be damaged or rendered inoperative by high temperatures	could be damaged or rendered inoperative by high temperatures	may or may not be affected by high temperatures depending on design
Radiation Effects	do not affect performance	cause damage (degradation) of insulation materials	cause damage	cause damage	probably cause damage	probably cause damage	probably not affect performance
Acceler., Shock Vibration	do not affect performance	high accelerations affect performance	could resist high accelerations if properly supported	would resist high accelerations	high accelerations affect performance	would be affected by high acceleration rates	would be affected seriously by high acceleration rates
Producibility	easy to fabricate and produce	fabrication more complex than fluidics	about the same order of complexity as fluidics	about the same or slightly less complex to produce	relatively complex fabrication process	relatively complex fabrication process	relatively complex fabrication process
Cost	ultimately, low cost - though not yet achieved	on a production basis, higher	probably about the same as fluidics	less costly	will likely always be more costly than fluidics	probably more costly than fluidics	probably more costly than fluidics
Interface Requirements	single phase (fluid) systems	requires electrical to mechanical or fluid interfacing	requires electrical to mechanical or fluid interfacing	requires multiphase interfacing	single phase (liquid) system capability	single phase (gas) system capability	single phase (mechanical) capability
Response To Hazardous Envi-	safe for use in hazardous environments	generally not safe for hazardous environments - without special precautions	generally would be safe for hazardous environments	safe for hazardous environments	may or may not be hazardous, depending on control means	may or may not be hazardous, depending on control means	not likely hazardous

ground from ceramic or metallic materials.

The piston is pushed by a spring. The holder, of silicone rubber or polyethylene, holds and seals the parts. Models have been made from 1/8 in. diameter and 1/3 in. long to 1-1/2 in. diameter and 6 in. long. Time delay varies between 0.1 second and one hour. The dashpot has been used in experimental fuzes and is planned for incorporation in Fuze, XM431 for the 2.75-inch rocket[15].

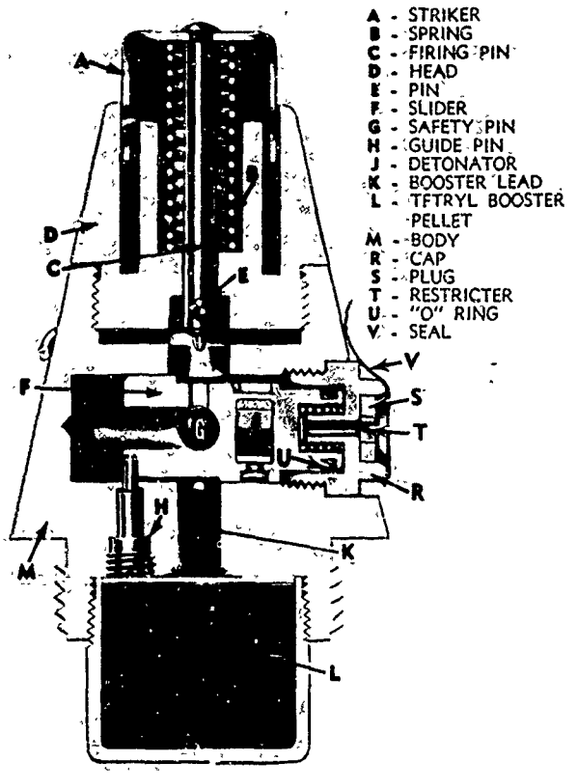

Figure 8-8. Fuze, XM717

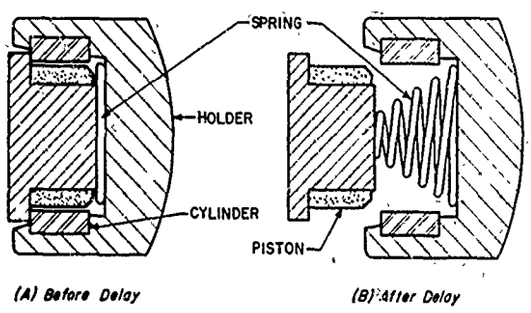

Figure 8-9. Pneumatic Dashpot for Arming Delay

Theory of operation is based on the compressible flow of air through the orifice. The annular orifice, in this case, acts the same as a rectangular duct of the same dimensions, i.e., width equal to clearance and length equal to circumference. The clearance

$$h = \left[\frac{6\eta\, r\, l^2 P_1}{t\,(P_1^2 - P_2^2)} \right]^{1/3} \qquad (8\text{-}1)$$

where h is the clearance from piston to cylinder, in.; η is the viscosity of the air, slug/ft-sec; r is the radius, in.; l is the length of air travel, in.; P_1 is the pressure in the cylinder, psi; P_2 is the ambient pressure, psi; and t is the desired time delay, sec.

8-2.4 DELAY BY FLUIDS OF HIGH VISCOSITY

8-2.4.1 Silicone Grease

The viscosity of silicone greases and gums offers resistance to motion. The temperature viscosity curve of silicone grease is flatter than that of other oils and greases. In the past, use of this substance has therefore been attempted to provide time delay. However, the leakage problem was severe: the grease gummed up the arming mechanism so as to render it useless. This problem was overcome in Grenade Fuze, XM218 and XM224 by sealing a silicone gum in a plastic sac made up of heat sealable Mylar tape. This fuze provides safing, arming, and functioning for a number of grenades and bomblets. The fuze arms when a specified spin rate is achieved by the descending grenade. At that point, centrifugal forces disengage from four lock weights to permit a detonator rotor to turn 90° to the armed position thus releasing the delay assembly.

Fig. 8-10[16] shows the sac and rotor delay mechanism of Grenade Fuze, XM218. The sac assembly consists of a metal backing disk and a plastic capsule, about 3/4 in. in diameter and 1/8 in. thick, containing silicone grease. The periphery and a segment of the plastic disk are heat sealed to the metal disk to form a pocket for the delay fluid. The sac assembly is placed against the delay rotor assembly (the space between the two assemblies in the illustration was introduced solely to show the sac assembly clearly). In operation, the delay is obtained when the four blades of the delay rotor, by virtue of a torsion spring, slide over the surface of the fluid sac, thus displacing and metering the fluid from one side of each blade to the other. After rotation of the delay rotor, a firing pin is released to

initiate the explosive train. The design described was obtained by empirical means. The analysis is complex because the flow in the fluid sack passages varies as a function of rotor radius. Analytical techniques relating to the interactions of timer geometry, silicone fluid properties, and friction levels have not yet been completed.

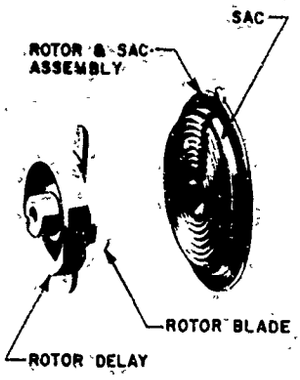

Figure 8-10. Delay Assembly of Fuze, XM218

8-2.4.2 Pseudofluids

It has been found that small glass beads flow somewhat like a fluid. Hence, their use has been investigated for arming delays and safety detents in fuzes and S&A's[17-20]. Glass beads are employed as follows: Motion of a piston caused by acceleration is regulated by the flow of beads through an orifice. Either a central hole or the annular space surrounding the piston can serve as that orifice.

Glass beads have the advantage that their operation is much less temperature dependent than that of true fluids. Glass bead delay mechanisms have been successfully tested in mortar fuzes with launch accelerations from 500 to 10,000 g. Other glass bead safety switches have been used in missiles and rockets under accelerations of 10-50 g.

Factors that affect the performance of glass bead accelerometers include:

(1) Orifice, piston, and container configurations
(2) Bead size and material
(3) Bead shape
(4) Moisture content
(5) Surface lubrication
(6) Electrostatic charge

No design parameters have been established for the size relation of orifice, piston, and container; past designs have been empirical. Beads of approximately 0.005-in. diameter formed from crown-barium type glass have been used in these devices. It is critical that beads are near perfect spheres or they tend to interlock. Preconditioning of parts and assembly areas with controlled atmosphere are required to exclude moisture which causes sticking. Properly applied dry surface lubricants, such as molybdenum disulphide, improve performance. At low g values, difficulty has been experienced with static electricity. Generated by the rubbing beads, static electricity tends to make the beads stick and impede flow. Silver plating the glass beads materially improves the dissipation of static charges.

8-3 CHEMICAL ARMING DEVICES

Chemical reactions are used to provide heat, to dissolve obstructors, or to activate electrical batteries. The first example, heat processes, involves explosive reactions described in par. 4-2, and the last example, electrical batteries, is described in par. 3-4.3.3.

Time bombs may contain a chemical long-delay fuze. One form contains a liquid that dissolves a link in order to release a firing pin. This is usually termed a functioning delay. The liquid is kept in a glass vial that is broken to activate the system. Fig. 8-11 illustrates a system in which a plastic collar is dissolved in acetone so that the firing pin will slip through and strike the detonator.

This delay is relatively simple to build but the time interval is not consistent because the rate of reaction is so strongly dependent upon ambient temperature. Further, if the solution is stirred or agitated, the reaction rate increases;

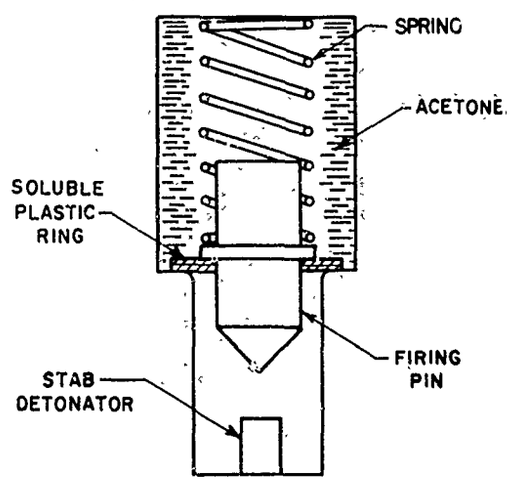

Figure 8-11. Chemical Long Delay System

and if the original concentration varies, the reaction rate varies accordingly. For simple reactions, the Arrhenius equation is a good approximation for the rate of reaction[21].

$$K = K_o \, e^{-H/RT} \qquad (8\text{-}2)$$

where K_o in reactions/sec and H in cal/mole are constants, R is the universal gas constant, and T is the absolute temperature. For first order reactions K_o is approximately 10^{13} reactions per second and for second order reactions it is about 10^9. (A first order reaction is one in which the rate of reaction is directly proportional to the concentration of the reacting substance. A second order reaction is one in which the rate of reaction depends upon the concentration of two reacting substances.)

For first order reactions, the concentration Γ after a time t is

$$\Gamma = \Gamma_o \, e^{-Kt} \qquad (8\text{-}3)$$

where Γ_o in moles/cc/sec is the initial concentration and K is given by Eq. 8-2. Although these equations are valid, they should be used only as an approximation. Then, empirical methods should be employed to set the dimensions. These tests involve measurements of concentrations which can be done in any of the following ways: (1) measure the solution concentration by quantitative chemical analysis (the most reliable but expensive), (2) measure the volume of gas produced (simple but greatly affected by temperature); (3) correlate the concentration with light absorption (continuous measurements), (4) measure the density of the solution (comparatively simple and widely used), (5) measure the refractive index (continuous and not too dependent upon temperature), (6) measure the viscosity of the solution (slow, inaccurate, and inconvenient), and (7) use radioactive isotopes as tracers (expensive and not as well known). Once the rate of reaction is determined, the approximate delay time may be found by calculations.

8-4 MOTION-INDUCED ARMING DEVICES

Moving arming devices are possible in certain cases. They require high relative velocities or very strong interactions. They have been used mainly for the initiation of fuzes but they could be applied to arming process. Also commands could be relayed to munitions to control their fuzes.

ELECTROMAGNETIC INDUCTION signifies that an electromotive force is induced in an electric circuit when the magnetic field about that circuit is changed. The basic equation is

$$E_g = -N \frac{d\Phi}{dt} \qquad (8\text{-}4)$$

where E_g is the induced voltage, in volts; N is the number of coils of wire through which the magnetic flux Φ, in webers, changes.

This is useful in sea mines as shown in Fig. 8-12. The earth's magnetic field is shifted by the iron ship so that the magnetic flux threading the coil is changed as the ship passes over the mine. The electric voltage induced in the coil actuates a sensitive relay which closes the detonator firing circuit. (See also par. 3-4.3.2.)

COMMAND FUZES operate by receiving signals from an operator. For example, harbor defenses have been operated thusly; an observer notes when enemy ships pass through mine fields so that he may explode the mines by remote control (see par. 13-3).

Munitions are sometimes operated by radio signals. Usually, this method is reserved for guided missiles in which other signals are received via radio as well as arming and initiating signals.

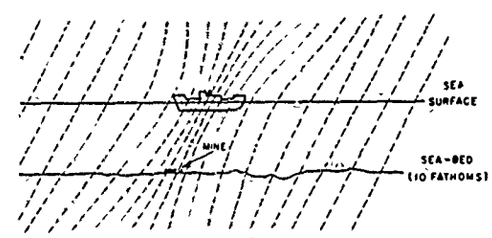

(A) Earth's Magnetic Field Lines

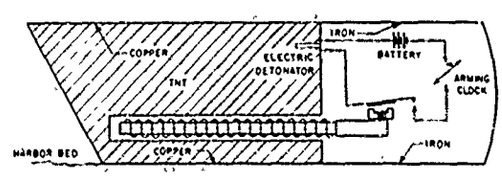

(B) Detail of Mine

Figure 8-12. Electromagnetic Induction Sea Mine

REFERENCES

1. R. L. Daugherty and A. C. Ingersoll, *Fluid Mechanics*, McGraw-Hill Book Co., Inc., New York, N.Y., 1954.
2. H. W. King and E. F. Brater, *Handbook of Hydraulics*, 5th Edition, McGraw-Hill Book Co., Inc., New York, N.Y., 1963.
3. MIL-STD-1306 (proposed), *Fluerics, Terminology, Symbols, and Schematics*, Military Standard, Dept. of Defense, April 1967.
4. R. A. Shaffer, *The Application of Pure Fluids Technology to Artillery Fuzes (U)*, Frankford Arsenal, Report M66-20, Philadelphia, Pa., May 1965, AD619 054, (Confidential).
5. *The Application of Fluerie Devices to Ordnance Timers*, Journal Article 51.0 of the JANAF Fuze Committee, 3 May 1967, AD-834 083.
6. R. A. Shaffer, *"Fluid-Mechanical Problems Associated with a Fluerie Timer Designed for Artillery Fuze Applications," Proceedings of the Timers for Ordnance Symposium, Vol. 1*, Sponsored by U.S. Army Harry Diamond Laboratories, Washington, D.C., 15-16 November 1966, pp. 59-78, AD-813 504.
7. Carl J. Campagnuolo, *Fluidic Safing-Arming System (U)*, U.S. Army Harry Diamond Labs., Report TR-1333, Washington, D.C., Dec. 1966, (Confidential).
8. I. Berg and L.A. Parise, *Fluerie Timer Evaluation for Ordnance Application*, Picatinny Arsenal, Technical Report 3613, Dover, N.J., February 1968.
9. C. J. Campagnuolo and S. E. Gehman, *Fluerie Pressure- and Temperature-Insensitive Oscillator for Timer Application*, U.S. Army Harry Diamond Laboratories, Report TR 1381, Washington, D.C., February 1968.
10. Russ Henke, "Fluidics Control: Yesterday, Today and Tomorrow", Electromechanical Design **12**, 5 (1968).
11. Nathan Seiden and Donald Ruggerie, *Product Improvement of the M52A2 Fuze*, Picatinny Arsenal, Technical Report 3568, Dover, N.J., February 1967.
12. TM 9-1300-203, *Artillery Ammunition*, Dept. of Army, April 1967.
13. D.S. Breed, *The Theory and Design of a Pneumatic Time Delay Mechanism*, Massachusetts Institute of Technology, Cambridge, Mass., Master of Science Thesis, September 1961.
14. *PAOD, A Pneumatic Annular Orifice Dashpot Suitable for Use in Ordnance Safety and Arming Delay Mechanisms*, Breed Corp., Fairfield, N.J., January 1967.
15. U.S. Patent 3,171,245, *Dashpot Timer*, 2 March 1965, assigned to Breed Corp., Caldwell, N.J.
16. I.P. Parisi, *Product Improvement of the XM218 Fuze and Development of the Short Delay XM224 Fuze (U)*, Picatinny Arsenal Technical Report 3425, Dover, N.J., August 1966 (Confidential).
17. *Glass-Bead Study (U)*, Eastman Kodak Co., Final Summary Report, February 1959, Contract DA-30-115-501-ORD-873 (Confidential).
18. *Integrating Arming Device for Fuzes Used in Non-Rotating Ammunition (U)*, Magnavox Co., Summary Report, 1 December 1960, Contract DA-11-022-501-ORD-3121, (Confidential).
19. *Parameters Affecting Performance of Pellet Flow Accelerometers*, General Electric Co., Missile and Space Vehicle Dept., Final Report, June 1962, Contract DA-36-034-ORD-3230 RD.
20. *Development Summary Report on Fuze Supporting Research Investigation Toward a Mortar Fuze Integrated Arming Device (U)*, Magnavox Co., 1 July 1963, Contract DA-11-022-ORD-4097 (Confidential).
21. E.B. Millard, *Physical Chemistry for Colleges*, McGraw-Hill Book Co., Inc., N.Y., 1953, p. 450.

PART THREE—FUZE DESIGN

INTRODUCTION

There are few, if any, mechanical devices for commercial or military use that must satisfy as many stringent requirements as the fuze for ammunition. It must not only withstand the rigors of transportation, field storage in any part of the world, and launching under a multitude of conditions, but also it must function as designed upon the first application of the proper stimulus. From the assembly line at the loading plant until use on the battlefield, the fuze must be safe to handle.

Thus, the fuze designer's problem is twofold. He must design a fuze that first will amplify a small stimulus so as to detonate a high explosive charge as described in Part One, and second that will contain a safety mechanism so as to prevent premature functioning as described in Part Two. In Part Three, considerations for fuze design are discussed and then applied to simple but representative fuzes. Subsequent chapters are devoted to sample designs of specific fuze features and to fuze testing.

It should be stressed that the examples given are not meant to restrict the principles to the few described. That is, examples of sliders and rotors are given for fuzes of spin-stabilized munitions, but such fuzes are also armed and functioned with sequential arming leaf systems, setback actuated devices, and clockworks. To avoid repetition, different items have been discussed with various munitions to cover as many types as possible.

CHAPTER 9
CONSIDERATIONS IN FUZE DESIGN

9-1 GENERAL

A designer's ability to develop a fuze is contingent on his knowledge of exactly what a fuze must do and of all environments to which it will be exposed. The purpose of this Chapter is to discuss the more basic safety and environmental requirements; to present a general plan for the major phases of development from first pencil sketch to final fuze acceptance for production; and to illustrate the sequence of design and the application of the principles developed in Parts One and Two.

9-2 REQUIREMENTS FOR A FUZE

Fuzes are designed for tactical situations. They are used with various series of ammunition items; artillery projectiles, aircraft bombs, sea mines, small arms, rockets, and guided missiles. Each series has its own set of tactical requirements and launching conditions which govern the final design of its fuzes. Within a series of ammunition items (artillery projectiles, for example) a fuze may be designed for a specific round that is used with one particular weapon or it may be designed for assembly to any one of a given type of projectile, say all HE projectiles used for guns and howitzers ranging from 75 mm to 175 mm and 8 inch. The first fuze satisfies a set of specific requirements, whereas the second must be operable over a range of launching conditions, muzzle velocity of 420 fps (105 mm howitzer) to 3000 fps (175 mm gun). In addition, the fuze is designed for different tactical situations—for ground demolition (on the surface or after target penetration) or for air burst.

These illustrate the scope of target and firing conditions that may dictate design considerations for only one series of ammunition items; similar lists could be made for the fuzes of other series. Therefore, before undertaking the development of a fuze, a designer must be thoroughly familiar with the tactical requirements of the fuze and the conditions prevalent in the weapon concerned.

All fuzes, regardless of tactical use, must satisfy definite basic requirements of environment and safety.

9-2.1 ENVIRONMENTAL FEATURES

Tactical requirements vary for specific fuzes, but every fuze will undergo a number of environmental conditions from assembly to use. While all fuzes do not undergo the same environmental conditions, the more common areas have been standardized and grouped together for convenience[1]. Accordingly, the specifications for new fuzes can be written simply by reference. The environmental conditions influence choice of materials, method of sealing and protecting the fuze, layout and design of component parts and method of packaging. Many of the widely used features are included in the following list (for more details, see pars. 15-3 and 15-4):

(1) OPERATING TEMPERATURE. The fuze must withstand temperatures ranging from an air temperature of 125°F (ground temperature of 145°F) in hot-dry climates to an air temperature of −50°F (ground temperature of −65°F) in cold climates[1]. Temperatures can drop to −80°F in bomb bays of high flying aircraft, and aerodynamic heating can raise the temperature of missiles launched from high speed planes above 145°F.

(2) STORAGE TEMPERATURE. The fuze must be capable of withstanding storage temperatures from −70° to 160°F and be operable after removal from storage[1].

(3) HUMIDITY. The fuze must withstand relative humidities up to 100%[2].

(4) RAIN. The fuze must function as intended even when fired in a rain storm.

(5) WATER. The fuze may, in certain instances, be required to be waterproof, showing no leakage, and be safe and operable after immersion in water at 70° ± 10°F under a gage pressure of 15 ± 5 psi for one hour.

(6) ROUGH TREATMENT. The fuze must withstand the rigors of transportation (including perhaps parachute delivery), and rough handling.

(7) FUNGUS. The fuze must be able to withstand fungus growth.

(8) SURVEILLANCE. The fuze must remain safe and operable during and after storage in a sealed can for 10 years (20 years are desired).

9-2.2 GENERAL SAFETY FEATURES

The basic mission of a fuze is to function reliably, and to receive and amplify a stimulus when subjected to the proper target conditions. The tactical situation often requires the use of a very sensitive explosive train—one that responds to small impact forces, to heat, or to electrical energy. Another of the designer's important considerations is safety in manufacture, in loading, in transportation, in storage, and in assembly to the munition. In some cases, the forces against which the fuze must be protected may be greater than the target stimulus. Safety then is a real challenge for the designer. No phase can be ignored because an unsafe fuze may become a subtle weapon for the enemy.

A fuze designer knows the safety requirements; these govern the approach he takes. At each step in design and development of a fuze, he must be conscious of safety. Safety applies not only to the complete fuze but also to each step during processing and assembly of the various components of the explosive train. If the requisite detonator cannot be manufactured safely, then the design of the fuze may have to be changed.

Safety enters every facet of fuze and component development. In addition to the broad aspects, there are safety features in fuzes that are mandatory, desirable, or both. Frequently, the desirable features can be included at the designer's discretion without interfering with the basic design. It should be noted that these "extra" features represent the designer's competence and ingenuity.

A cardinal requirement for all fuzes is that they be *detonator safe*, i.e., functioning of the detonator cannot initiate subsequent explosive train components prior to arming. An interrupted explosive train (mechanical separation) is the basic method for attaining the detonator safe feature. Examples are out-of-line elements such as a slider or a rotor. The interrupter should have a positive lock while in the safe position. The detonator must be assembled in the safe position so that the fuze is safe during all final assembly steps and during subsequent handling.

Artillery projectiles, mortar projectiles, and rockets must be *bore safe*. The fuze must be so designed that the detonator will not initiate a bursting charge while the projectile or rocket is in the launching tube. Hence, it may be necessary to add a device to delay the arming of the fuze until after the munition has left the launcher.

The fuze must never remain in the partially armed position. As soon as the force that caused partial arming is removed, the fuze must return to the unarmed position. For example, if a fuze that became partially armed during transportation were loaded into a gun, that fuze might be neither *bore safe* nor *detonator safe*.

Fuzes must have *two independent safing features* whenever possible, either of which is capable of preventing an unintended detonation before the munition is projected or emplaced. The philosophy is based on the low probability that two features will fail simultaneously. If possible, both safing features should be "fail safe" and each should be actuated by a separate force.

The safety requirements for Army fuzes are contained in a MUCOM Regulation[3] while those for Navy fuzes are contained in a MIL-STD[4].

An arming indicator is an example of a desirable safety feature for fuzes if it can be seen in the assembled round. The indicator clearly shows whether the fuze is safe or armed. Some bomb fuzes and safing and arming devices already have this feature, and it is becoming more popular for other fuzes. An anti-insertion feature is also convenient in the field. Some fuzes cannot be inserted in their fuze cavity unless properly adjusted.

Some fuzes and fuze components are assembled in production by mechanical spin assembly equipment. To insure that spin-actuated fuzes of 37 mm and above are not armed by this operation, the fuze must at no time be spun in excess of 300 rpm nor can the fuze be accelerated to 300 rpm in less than one second[5]. Thus the designer must insure that production methods cannot compromise the safety features of the fuze.

9-3 STEPS IN DEVELOPING A FUZE

Development of a fuze is considered successful and complete only when pilot lots have passed all tests and the fuze has been accepted as a standard item ready for mass production. Many steps are involved between the first preliminary sketch and the production of standard fuzes. Throughout development, the designer must consider a myriad of details at each of four basic phases: (1) preliminary design and layout, (2) dimensional design and calculations, (3) model testing and revision, and (4) final acceptance, safety, and proving ground tests.

9-3.1 PRELIMINARY DESIGN AND LAYOUT

Many times, tactical situations in the field establish the need for a new fuze or a revision of an existing fuze to extend the use or lethality of a weapon. In either case, the first step in the development of a fuze is a thorough analysis of what firing conditions the fuze will encounter and precisely what the fuze must do. Furthermore, the fuze designer should maintain close liaison with the designers of the complete weapon system just in case specifications are changed. It is discouraging but true that important changes have gone unnoticed until it was all but too late.

A good fuze design includes the following features: (1) reliability of action, (2) safety in handling and use, (3) resistance to damage in handling and use, (4) resistance to deterioration in storage, (5) simplicity of construction, (6) adequate strength in use, (7) compactness, (8) safety and ease of manufacture and loading, and (9) economy in manufacture.

With the knowledge of what the fuze must accomplish, preliminary sketches are prepared to depict the components of the explosive train and arming device.

Present manufacturing policies dictate layout and design of all components. A design, even in the preliminary stages, is subject to severe criticism if it is not kept in mind that parts must be mass produced economically. For assembly line techniques, the components of a fuze must be relatively simple, difficult to omit or malassemble, and, of course, safe to handle.

9-3.2 DIMENSIONAL DESIGN AND CALCULATIONS

After the preliminary design has been approved, the required explosive train has been established, and the basic arming actions have been selected, the detail drawings are prepared from which prototype models can be made. Materials are considered. As was done in the preliminary stage, all tactical, environmental, safety, and design requirements for fuzes are reviewed critically. Other similar fuzes already in production should be examined for typical parts that might be used interchangeably (screws, shafts, and collars); this step frequently reduces manufacturing costs.

At this point, the designer evaluates forces

acting on the fuze, selects materials, and determines component sizes. External forces to which a fuze may be subjected are shocks and vibrations that occur when a fuze is transported or when accidentally dropped. Accelerating forces on different fuze parts occur during launching (setback), during flight (centrifugal and creep), and at the target (impact). All these forces the fuze must be able to withstand without changing its operating characteristics. Forces must be computed in detail. Finally, the choice of materials and dimensions for the parts depend on elastic modulus, strength, corrosion resistance, machinability, availability in times of emergency, and cost. During this phase, performance is calculated and reliability is estimated.

Secondary effects that might necessitate a change in shape or balancing of parts are resonant vibration frequencies, Coriolis effects, and overweight. Those who are familiar with handling, storage, and tactical requirements may suggest other changes.

The final drawing-board layout should include different views, so that interferences may be detected and the correct motion of every part may be assured. The failure to make such checks is often responsible for costly delays in the model shop and in scheduling proof tests. See also Chapter 14 for additional guidance on design details.

9-3.3 MODEL TESTS AND REVISIONS

The complexity of forces acting and the stringent requirements imposed on a fuze emphasize the need for extensive tests after the prototype or model has been fabricated. The actual schedule used and the number of items tested for evaluating a fuze design depend on the type of fuze, severity of requirements, available time and funds, and related factors. On one hand, the evaluation must be reliable. On the other hand, it must be realistic, must permit design revisions at various stages of testing, and must allow short cuts when indicated by the particular application. The tests are described in more detail in Chapter 15 on Fuze Testing.

While most tests are performed on the complete assembly of the prototype fuze, model tests during the preliminary layout stage can be most helpful and may save many headaches. For instance, a novel idea for an arming action could be evaluated by subjecting the pertinent components to the required setback and centrifugal forces. Model tests of partial assemblies and subassemblies in the early stages of development will often reveal flaws that are not evident on the drawing board.

Model tests at each stage and detailed layouts of the design are important for the successful development of a fuze. They permit early evaluation and revision of component parts before the design has progressed to the advanced stages. It is possible that a change in one component might precipitate a series of changes in other components that are already being fabricated in the model shop.

9-3.4 FINAL ACCEPTANCE, SAFETY, AND PROVING GROUND TESTS

A fuze that has passed all of the preliminary model tests satisfactorily is ready for rigorous safety and surveillance tests and for proving ground acceptance tests. These are generally performed on samples selected from a pilot lot, and thus are nearly representative of production quality. The safety and surveillance tests are described in pars. 15-3 and 15-4.

The only completely reliable test for the effectiveness of a fuze is the firing or proof test that is made under actual conditions of use. The fuze, if it functions, is destroyed; hence, design features must be judged good or bad by the application of statistical analysis. The evaluation of a proof test is extremely important. Sometimes the results are surprising and perhaps discouraging. Accumulated tolerances and compromises by designers of other components of the weapon system (projectile, gun chamber, and propellant) cause the operating conditions to differ from those on which the fuze designer based his calculations and thus can cause malfunctions. This should encourage the fuze designer to learn more about the complete weapon system and to maintain close liaison with the designers of the other major components to arrive at a well integrated system.

The proof test may indicate the need for basic modifications to the fuze or an area for compromises so that the fuze can be used throughout an ammunition series. Likewise, the pilot plant production run may suggest other refinements to enhance the ease of manufacture. These changes must be made and evaluated by additional model

and firing tests. In the end, the success of the design depends on whether the fuze is practical and its cost reasonable.

9-4 APPLICATION OF FUZE DESIGN PRINCIPLES

A review of the foregoing parts of this Handbook shows that concepts and formulas have been presented for functioning and arming of a fuze. The purpose now is to develop and illustrate the rudiments of a design procedure. Such a procedure could be illustrated in two ways: (1) the voluminous notes, sketches, calculations, and drawings of a fuze could be edited and transcribed as an example[6] or (2) a commentary on the highlights of a step-by-step development of a fuze could be presented. The latter has been chosen. The discussion will treat the problem as though it applied to a new fuze for a new weapon system.

The fuze selected for development was chosen for its simplicity. It illustrates the design principles discussed above and lends itself readily to a step-by-step presentation. However, it does not necessarily meet all of the current fuze requirements nor use the latest available components. Hence, the following presentation serves as a sample design procedure rather than as an example of current fuze design. Design features of a current fuze are summarized in par. 9-4.4.

9-4.1 REQUIREMENTS FOR THE FUZE

A new weapon system can evolve in one of two ways. Either a combat element determines a need to meet certain tactical situations or it capitalizes on a brilliant idea (designs in some cases) for a new weapon. In either case, the tactical requirements provide the input data for extensive ballistic studies from which the general size and shape of the complete projectile or missile are derived. Assume now that a fuze for a projectile is required. With scale factors in hand, the theorist allows space for the fuze based on existing standard projectiles. (He has already established the outside surface of the fuze by fixing length and radius of the ogive.) All these are shown on what is termed a caliber drawing of the projectile, Fig. 9-1. At the same time, the theorist has calculated the amount of high explosive to be carried by the projectile. Additional data available are ballistic curves for the weapon in which the projectile will be fired (Fig. 9-2). From these, the fuze designer can determine the forces available during projectile travel in the gun tube and at the muzzle. The tactical use establishes the minimum arming distance and how the fuze should function.

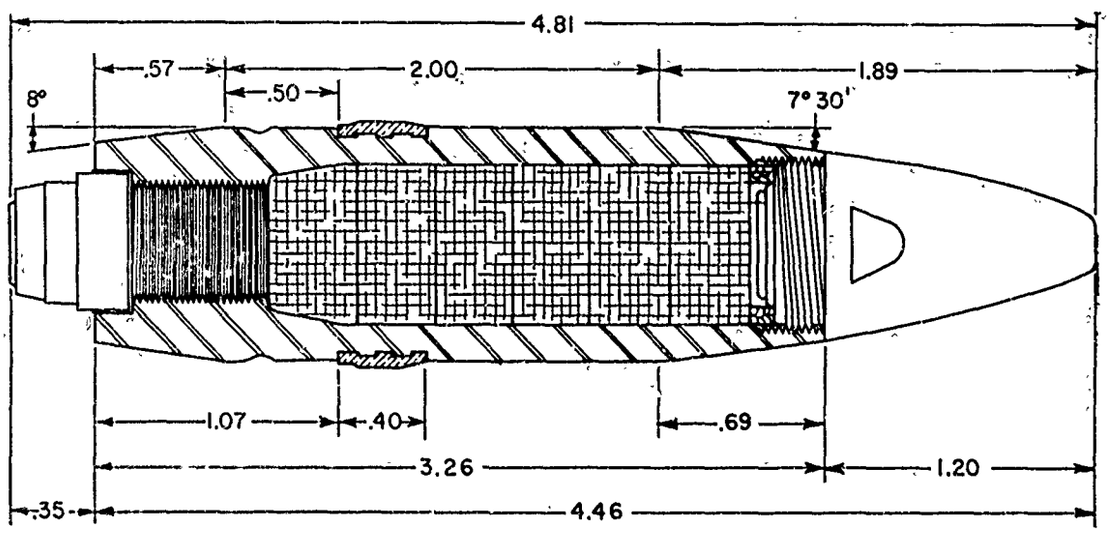

(All Dimensions in Calibers)

Figure 9-1. Caliber Drawing of 40 mm Projectile

The requirements which govern the fuze design for the illustrative example are summarized in Table 9-1.

In addition to the specific tabulated requirements, the designer must keep in mind the general requirements (par. 9-2) and the acceptance tests (pars. 15-2 to 15-5).

The fuze designer has his assignment; the requirements have been outlined. In essence, he has been handed a chunk of metal with the limitations shown in Fig. 9-3. Into this space he must fit explosive train and arming mechanism.

TABLE 9-1. REQUIREMENTS AND DESIGN DATA FOR SAMPLE FUZE

From the Ballistic Curves	
Maximum Gas Pressure	40,000 psi
Gas Pressure At Muzzle	9000 psi
Muzzle Velocity	2870 fps
Rifling Twist	1 turn in 30 cal
Bore Diameter	1.575 in. (0.1312 ft)
Projectile Weight	1.985 lb
Other	
Arming Distance	Bore safe
Booster Pellet Material	Tetryl
Type of Initiation	Impact
Functioning Action	PD SQ

9-4.2 DESIGN CONSIDERATIONS

The first step is to make a series of sketches, of which Fig. 9-4 might be one, to illustrate the components of the explosive train. It is first necessary to apportion the available space among the components. At least a booster charge, a detonator which can be moved away from the opening to the booster charge, an arming device, and the firing pin are required. Thus, the design of the fuze will include three basic subassemblies—booster assembly, detonator assembly, and initiating assembly—all of which must be fitted into the space allotted. This space can be machined out of single block for the fuze or it can be generated by assembling separate pieces. For this small fuze, a die cast block may be cheaper to manufacture than any other type. Then for convenience in the loading plant, booster, detonator, and initiating assemblies should be encased in

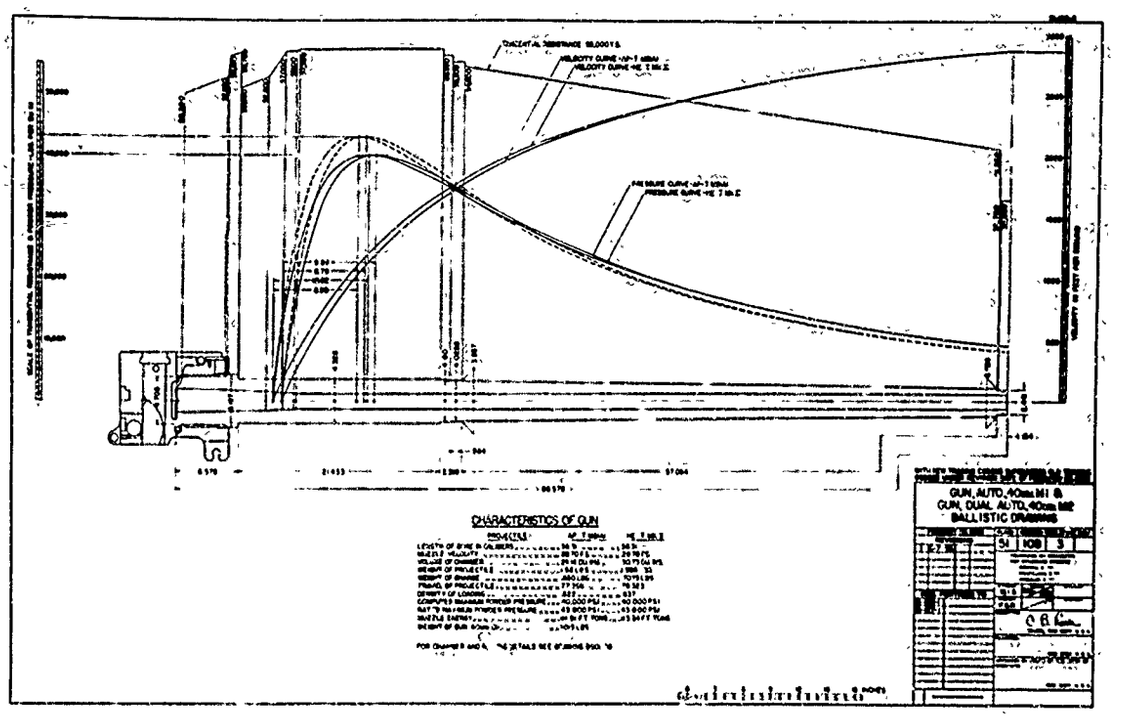

Figure 9-2. Ballistic Drawing for 40 mm Gun

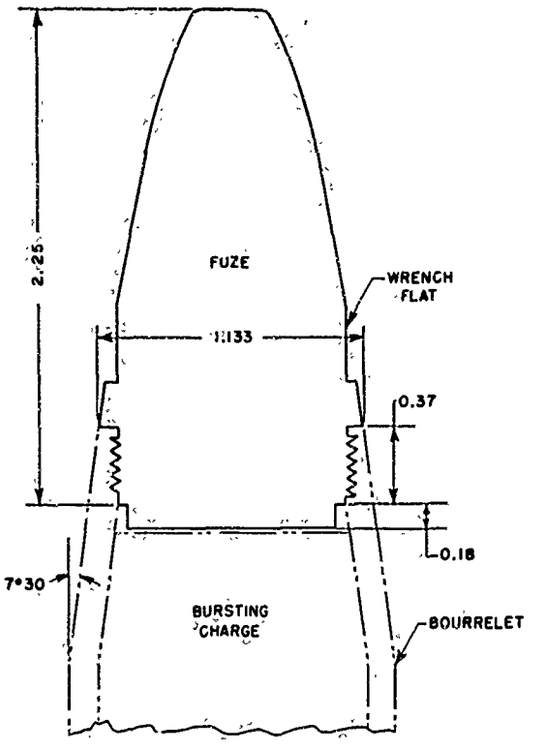

NOTE:- ALL DIMENSIONS IN INCHES

Figure 9-3. Outline of Fuze Contour

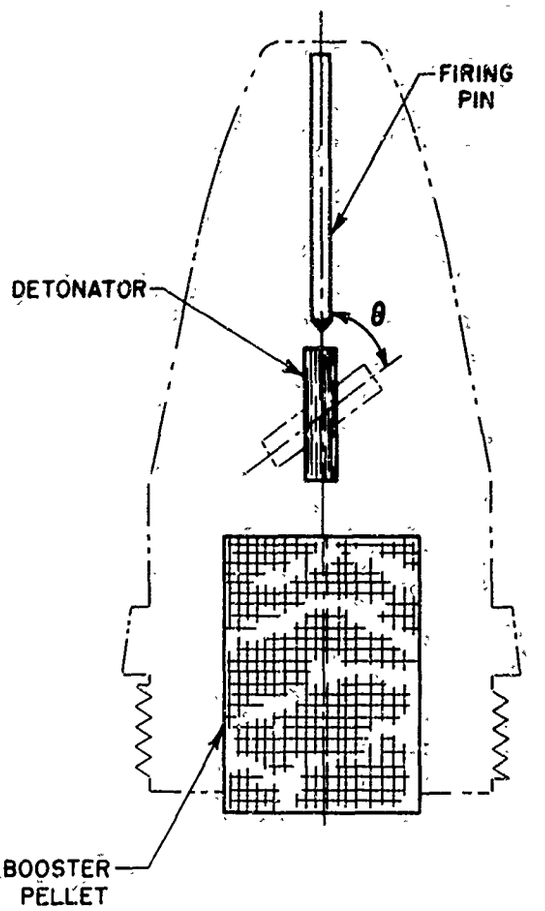

Figure 9-4. Preliminary Space Sketch

their own housings. A description of these assemblies follows.

9-4.2.1 Booster Assembly

The booster assembly includes the booster pellet, the booster cup, the lead, and a closing disk. From start to finish, the designer must always consider, in addition to fuze functioning and operating requirements, the manufacturing and loading techniques that are in common use. One may decide that 5.4 grams of tetryl at a density of 0.057 lb/in.^{3} are required to initiate the bursting charge[c]. For best output, the length to diameter ratio should be greater than 0.3 and less than 3 (see par. 4-4.4). Two standard tetryl pellets (each 2.7 grams, 0.56 in. in diameter, and 0.42 in. long) could be used. This will still leave enough space for a stab detonator between firing pin and booster.

The above figures are based on the assumption that the pellet is allowed to extend into the projectile cavity to increase the reliability of initiating the bursting charge. Enough space must be provided for metal side walls on the booster to properly confine the explosion.

Since the booster should be held in a housing as described above, Fig. 9-5 shows the fuze with the booster pellet encased in a cup that is screwed into the fuze body. Since the cup is open end out, a closing disk has been placed over the output end of the booster to retain the tetryl explosive filler.

The bottom of the booster cup at the input end of the booster, however, must have a thick wall, so that if the detonator should explode prior to arming, the booster will be adequately protected. For initiation at the target stimulus when the detonator is aligned, a small central hole is pierced in the cup. Another complication now arises: the detonator cannot reliably initiate the booster if the gap (hole through the booster cup) is too long. To assure reliability of

the explosive train, the same type of explosive as the booster pellet, tetryl, is inserted in the hole to carry the detonation wave to the booster. This is termed a lead. This component is initiated by the detonator and leads the detonation into the booster.

9-4.2.2 Detonator Assembly

In this simple fuze, the detonator converts the kinetic energy of the firing pin into a detonation wave. Thus a stab detonator is required that will be sensitive to the results of the expected target impact and yet will have an output that will reliably initiate the tetryl booster.

In accordance with the desire that standard components be used wherever possible, a stab detonator is sought that will fulfill the requirements. For example, the MARK 18 MOD 0 stab detonator has an input sensitivity of 24 in.-oz. The explosive components part of the Army-Navy-Air Force Fuze Catalog[o] and the volume on Explosive Components[j] list additional data. Output is given as an indentation of at least 0.090 in. in a lead disk. This output has been shown to be sufficient to initiate a tetryl booster and the input sensitivity is great enough for this fuze (shown later).

In order to provide detonator safety, the detonator must be moved out of line with the lead. A simple device for doing this is a disk rotor that carries the detonator. In the unarmed position, the explosive train is completely interrupted because the firing pin is blocked from the detonator and the detonator output end is not close to the lead. In the armed position, the disk will be rotated so that both of these safety precautions will be removed. Fig. 9-5 shows these features.

The rotor diameter must be just larger than the length of the detonator (0.41 in.), and the rotor thickness (the detonator has a diameter of 0.11 in.) must surround the detonator with enough material to provide adequate confinement (see par. 4-3). These considerations fix the dimensions of the rotor. Detents are added to hold the disk in the unarmed position; the detent springs are held in place by the detonator assembly housing shown in Fig. 9-5.

Fig. 6-14 shows a representative disk rotor. The approximate dimensions of the rotor will be

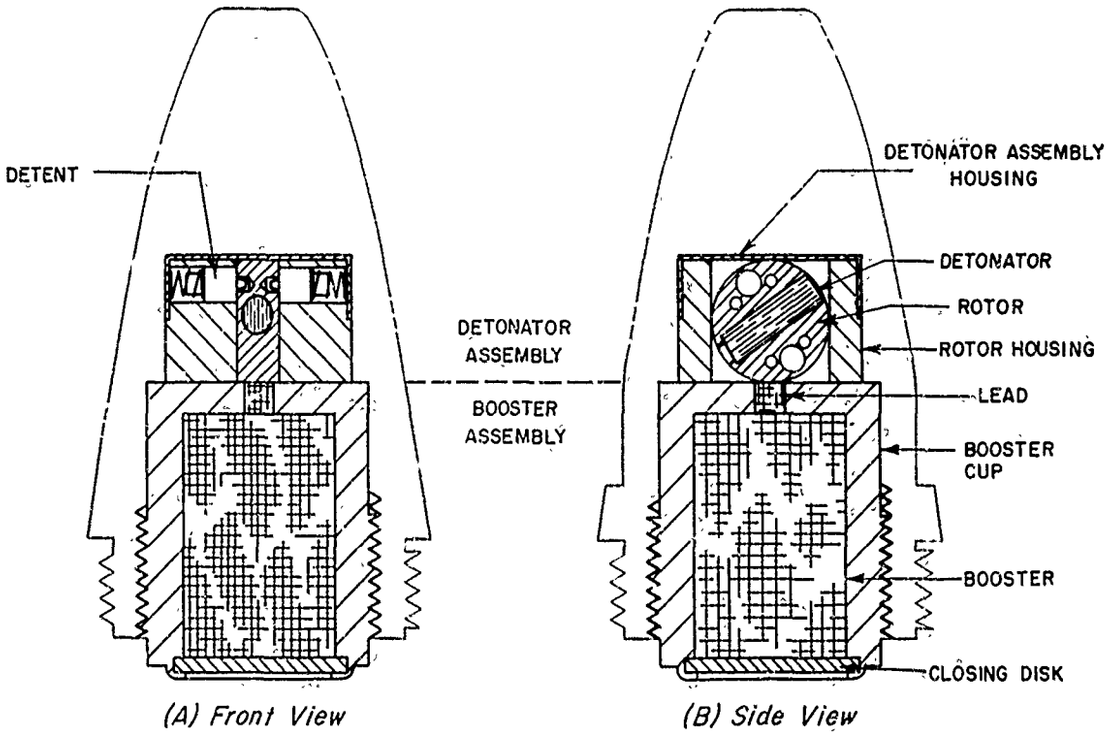

Figure 9-5. Booster and Detonator Assemblies

selected as 7/16 in. in diameter and 5/32 in. thick in order to properly house the detonator.

Rotor material is selected on the basis of density, confinement, and safety. An aluminum alloy that can be die cast would be convenient.

Next, the designer determines the arming limits. While in theory a fuze arms at a certain instant, in practice, allowances must be made for dimensional tolerances and variations in friction. Hence, both minimum and maximum arming limits must be selected. The specified arming levels are converted into units applicable to the particular design, such as setback or spin levels. The minimum arming level (must-not-arm value) must be sufficiently high to assure safety during handling and testing. The maximum arming level (must-arm value) must be well within the capability of the weapon and must fulfill the stated requirement. The spread between these two values must be reasonable from a viewpoint of manufacturing tolerances. Experience dictates which of the many values that meet these broad limits are optimum.

For the sample projectile, the spin at the muzzle is found from Fig. 5-5 as 730 rps or 44,000 rpm. Reasonable arming limits, based on the above considerations, would be 12,000 and 20,000 rpm.

With the equations in par. 6-5.1, the time to arm (the time for the rotor to turn into the aligned position) is calculated. For a first approximation Eq. 6-46 may be solved for t by neglecting friction. This value should be the minimum arming time.

Note from Eq. 6-46 that the time to arm depends only upon the ratio of the moments of inertia of the disk. However, density is not an ignorable factor. The individual moments of inertia depend upon density of rotor and its components.

Table 9-2 lists the various moments of inertia for the rotor and its parts as calculated by the usual formulas. By using Eq. 6-46 with $\theta_o = 55°$ and $\theta' = 0$, the time to arm at the spin for the muzzle velocity (Table 9-1) is found to be about 3 msec. Since the friction present always decreases the velocity as evident in Eq. 6-47, the time to arm will be greater than 3 msec. While the lead weights decrease the arming time, they also increase the stability of the rotor in the armed position which increases the reliability of the fuze to initiate the bursting charge.

To restrain the disk in the unarmed position, detents are inserted that are held by springs. If friction between detent and rotor hole is considered negligible, these springs are set with an initial compression equivalent to the centrifugal force produced by the detents at the minimum spin to arm. At the latter spin rate the detents will be in equilibrium while at any higher spin rate they will move radially outward to release the rotor. Eq. 6-17 defines the motion for the detents. Two items are important: (1) the spring force increases as the spring is compressed, but the centrifugal force increases at the same rate; therefore, once the part moves it will continue to move radially outward; and (2) the frictional forces arise from the torque induced in the rotor. The resisting torque on the rotor is represented by the second term on the left-hand side of Eq. 6-45. From the value of the disk assembly in Table 9-2, the torque is found to be 3.72×10^{-3} lb-ft and the frictional force on each detent is 0.15 lb. The centrifugal force on the detent, weight 4 grains, is calculated from Eq. 5-11 as 0.37 lb. The initial spring load, according to Eq. 6-17 must be at least 0.22 lb to prevent arming below the spin of 12,000 rpm. The spring design is explained in par. 10-2.1.

TABLE 9-2. COMPUTATIONS OF MOMENTS OF INERTIA, Slug-Ft^2

	J	I_P	I_D	$I_P - I_D$
Solid disk	1.174×10^{-8}	1.042×10^{-8}	1.042×10^{-8}	0×10^{-8}
Hole for lead	0.078	0.082	0.0092	0.073
Hole for detonator	0.151	0.014	0.151	−0.137
Hole for detent	0.0046	0.0032	0.0019	0.0013
Disk	0.830	0.836	0.858	−0.022
Detonator	0.0954	0.0106	0.0954	−0.0848
Lead weights	0.322	0.340	0.038	0.302
Disk assembly	1.569	1.527	1.029	0.498

9-4.2.3 Initiating Assembly

This assembly, shown in Fig. 9-6, contains the firing pin, the firing pin extension, two detents, a firing pin housing, and the spiral spring. One notes that the firing pin will be subject to rearward motion on setback. Since this is highly undesirable (the point will be damaged), some means are usually provided to prevent such rearward motion. Fig. 9-6 indicates two hourglass shaped detents between firing pin shoulders and container to prevent rearward motion. These detents are subject to the same considerations as rotor detents relative to length and clearance (see par. 6-4.1). The hourglass shape provides a more positive lock than a cylinder because setback tends to cock the detents to restrain their motion. Therefore, these detents will be released at a higher spin than the rotor detents. This arrangement assures that the firing pin cannot move until the detonator has rotated into line. Once the setback acceleration is removed, the detents are free to move radially outward just as the rotor detents are

For this geometry, a spiral (wrap-around) spring is convenient to hold the firing pin detents inward. See par. 10-3.2 for the calculations appropriate for such a spring.

From the specifications provided for the ogive shown on Fig. 9-3, an enlargement of Fig. 9-1, it is noted that the nose of this particular projectile is rather long. Hence, the designer should use a light firing pin in order to decrease the inertial effects. A plastic firing pin extension on the metal firing pin will suffice if the two parts are rigidly connected to provide for oblique impacts. The firing pin itself can be reduced to a weight of 1-1/4 grains and the firing pin extension to 2 grains.

Will this firing pin assembly provide the necessary 24 in.-oz to initiate the detonator? One could calculate the kinetic energy for a reasonable firing pin velocity, say 130 fps, making the necessary assumptions for friction in the firing pin motion for both square and oblique impacts. However, such computation is not of much value. It is more reasonable to assume that the firing pin stops (in effect) on impact, and that the energy of the projectile is available to fire the detonator. Hence, the detonator has a satisfactory input sensitivity for this fuze.

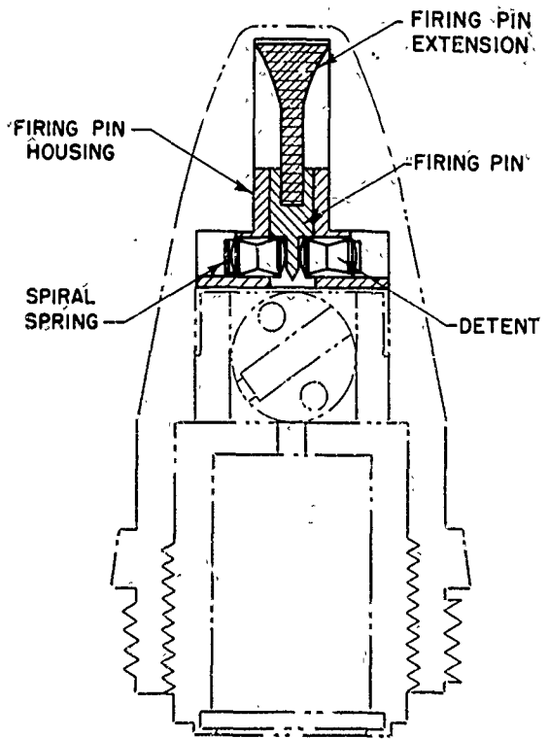

Figure 9-6. Initiating Assembly

9-4.3 TESTS AND REVISIONS

Finally, the design shown in Fig. 9-7 is derived. Parts are manufactured and assembled into the fuze. The design must now meet proof st standards. When the fuze passes the applicable tests of pars. 15-2 to 15-4, the designer has achieved his goal.

9-4.4 DESIGN FEATURES OF CURRENT FUZES

9-4.4.1 Example of Current Fuze Design

Fuze, XM539E4, is a point-initiated, base-detonated fuze for the XM409 HEAT Cartridge. It has few moving parts (no clockwork), as a matter of fact, has few total parts. It meets stringent safety requirements through mechanical and electrical safety. It is spin armed and has delayed arming. The point-initiating element in the nose is the piezoelectric Power Supply, XM22E4 (see par. 3-4.3.1).

The fuze is shown in Fig. 9-8[7]. During storage and handling, the explosive train—that consists

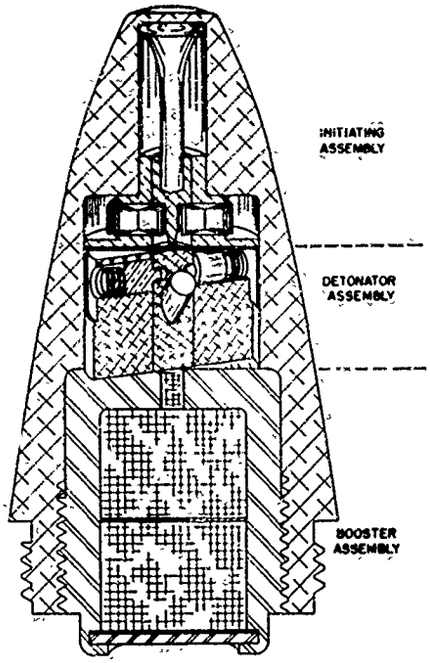

Figure 9-7. Complete Fuze Assembly

of the XM65 Electric Detonator, a lead, and the booster pellet—is interrupted by the out-of-line position of the rotor. The rotor is locked in the out-of-line, or unarmed, position by two opposing and spring-loaded detents that engage into holes at each end of the rotor.

Two set screws serve as thrust bearings on the ends of the rotor shaft. A return arm assembly, consisting of a weight brazed to the return frame is pivotable about a return pin and is held against the rotor stop pins by the rotor return spring. All are contained in an aluminum die-cast housing that in turn is contained in the body, and held by the booster cap assembly. A plastic plate carrying the rotor stop, terminal post, and contact leaf is held between body and rotor housing.

Centrifugal force, generated by the high spin velocity of the projectile, acts on the detents forcing them to move radially outward, unlocking the rotor. Setback and centrifugal forces, also acting on the return weight, cause the return arm to pivot away from the rotor. The rotor is then free to arm. Spin forces acting on the dynamic unbalance of the rotor induces the

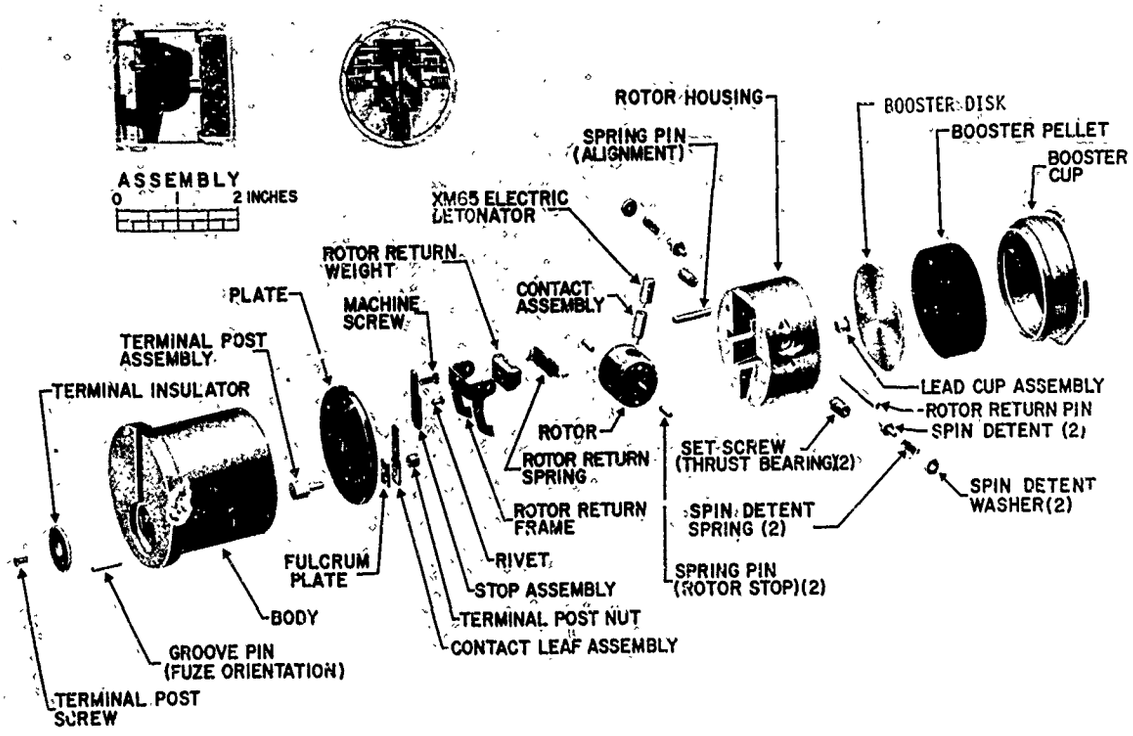

Figure 9-8. Fuze, PIBD, XM539E4

rotor to rotate until the detonator contact is against the stop, and the detonator is aligned with the lead cup. In this position, the detonator makes electrical connection with the contact leaf. Electrical energy transmitted from the nose element upon impact or graze initiates the detonator that propogates through the explosive train.

The return arm will return the rotor in the event that the fuze does not function if the spin drops below 2000 rpm. This insures against firing of a prearmed fuze and provides for safe disposal and handling of spent projectiles that were not destroyed by target impact.

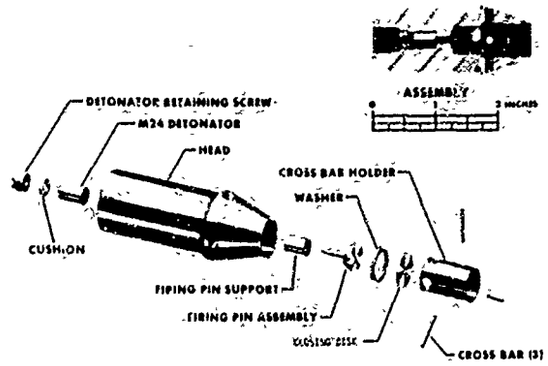

Figure 9-9. Head Assembly for Fuze, M557A1E1 (Rain Insensitive)

9-4.4.2 Example of Rain Insensitive Design

An effective empirical rain desensitizing feature for point-detonating fuzes consists of a recessed cavity in front of the superquick element (which consists of firing pin, firing pin support cup and a detonator) as shown in Fig. 9-9. The head assembly is the one used to make Fuze, M557A1E1 rain insensitive. The cavity dimensions can be varied so as not to seriously affect functioning against normal targets. Dimensions of the cavity illustrated are 1/2 in. diameter and 3/4 in. deep. The recess is baffled by three cross bars of different depths and orientations in the holder. These bars effectively break-up rain drops 4 mm and larger in diameter and reduce their momentum to a level sufficiently below the threshold energy for initiation. Four drain holes, spaced equally around the base of the cavity, expel by centrifuge action any accumulation of water.

This type of head is also effective in desensitizing fuzes for more effective penetration of jungle canopy. In this type of environment, the bars and the recess serve to cup up all foilage, branches, etc., encountered, filling the cavity while providing a delay beneath the canopy. When the cavity is completely filled, the fuze functions in the regular impact mode.

REFERENCES

a-t Lettered References are listed at the end of this handbook.

1. AR 70-38, *Research, Development, Test and Evaluation of Materiel for Extreme Climatic Conditions*, July 1969.
2. A. W. Baldwin, *Humidity as a Factor in Fuze Design and Evaluation*, Journal Article 26.0 of the JANAF Fuze Committee, 1 February 1963, AD-296 582.
3. USAMUCOM Regulation 705-11, *Research and Development of Materiel, Fuze Design*, 11 June 1964.
4. MIL-STD-1316 (Navy), *Fuzes, Navy, Design Safety Criteria For*, Dept. of Defense, 16 June 1967.
5. MIL-A-2550A, *Ammunition and Special Weapons, General Instructions For*, Dept. of Defense, 15 December 1961, Paragraph 4.8.
6. R. L. Graumann, *History of Design and Development of Mk 27 PD Fuze*, Naval Ordnance Laboratories, White Oak, Md., Memorandum 7868, 5 September 1945.
7. F. Spinale, *Fuze PIBD, XM539 Series and Supply, Control Power, XM22 Series (U)*, Hesse-Eastern Div., Everett, Mass., Final Summary Report, 14 February 1966, Contract DA-19-020-ORD-5442 (Confidential).

CHAPTER 10
FUZES LAUNCHED WITH HIGH ACCELERATION

10-1 GENERAL

As stated in par. 5-3, munitions are launched with a high or a low acceleration. Munitions are normally called projectiles if fired from guns, howitzers, and recoilless rifles. The projectiles parts must withstand great setback forces and yet retain their operability. This requires strong parts. While the projectile is in the gun tube, setback forces all parts rearward along the munition axis. Motion in the tangential direction for both arming and functioning can begin when the setback acceleration is sufficiently reduced after the projectile leaves the muzzle. Mechanical arming and percussion initiation are the simplest for the fuzes.

This Chapter contains design examples of parts found in projectile fuzes. Springs, rotors, sliders, lock pins, and sequential leaves are typical parts.

10-2 FUZE COMPONENTS FOR FIN-STABILIZED PROJECTILES

Fin-stabilized projectiles either do not spin at all or spin at a rate below that required to stabilize projectiles. The centrifugal forces acting on the fuze parts cannot be used for arming because they are not sufficiently different from those of normal handling. Tail fins on these projectiles prevent tumbling during flight. Arming is accomplished by means of springs and initiation by the effect of target impact. The springs may move sliders, hold lock pins, or turn rotors. Each must be designed according to its purpose.

10-2.1 COIL SPRING DESIGN

One common problem for a fuze designer is that of designing a spring to support a certain load. Usually the designer calculates the load and then fits a spring into the available space that will support that load. He determines wire size and material, number of coils, and free height necessary to fulfill the requirements. An approximate design is made that may be modified later, if necessary. The following example illustrates the procedure.

10-2.1.1 Restraining Motion

Assume the following problem: Design a striker spring for a fuze head assembly as shown in Fig. 10-1. The spring is required to prevent the forces experienced in flight (exterior ballistics forces) from driving the firing pin into the detonator until the target is struck. Approximate dimensions are scaled from the outside dimensions of the head.

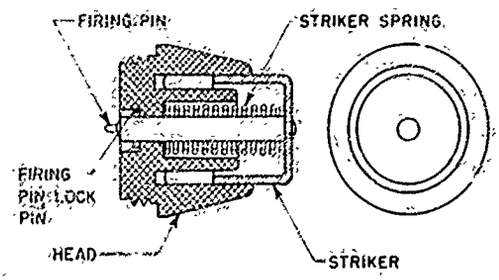

Figure 10-1. Fuze Head Assembly

The drag force on the striker is calculated by Eq. 5-3 in which $k_D = 0.35$, $d = 0.82$ in., $\rho = 0.0806$ lb/ft^3, and the velocity = 700 fps. Hence, the drag force is 2.0 lb. Note that, because of the streamlining of the projectile, the overall drag coefficient is 0.066 for the 60 mm Mortar Projectile, M49A2[1]. To prevent firing pin motion, a firing pin spring must be designed to have an initial compression load of at least 2.0 lb.

If a helical wire spring is used, the wire diameter may be estimated from the empirical formula

$$d_w = \sqrt[3]{\frac{Fd}{0.3\tau}}, \text{ in.} \qquad (10\text{-}1)$$

where F is the load at solid height, say, 4 lb; d is the mean diameter of the spring, in.; and τ is the safe shear stress in the wire, psi. From Fig. 10-1 the allowable mean diameter is 0.45 in. Let this be d and the allowable stress be 90,000 psi. Eq. 10-1 indicates the wire diameter to be 0.040 in.

Although the spring formulas take into account only torsional stress, the stress caused by

transverse shear may be accounted for by including the Wahl factor K_w. This correction factor depends upon the ratio of the mean diameter of the spring to the wire diameter.

For this spring

$$C = d/d_w = 11.3 \qquad (10\text{-}2^*)$$

The Wahl factor K_w is estimated from

$$K_w = 1 + \frac{1.2}{C} + \frac{0.56}{C^2} + \frac{0.5}{C^3} \qquad (10\text{-}3)$$

so that $K_w = 1.12$. The designer calculates the actual shear stress under the given load by the equation

$$\tau = \frac{8FdK_w}{\pi d_w^3} = 80{,}000 \text{ psi} \qquad (10\text{-}4)$$

which is within the allowable limit.

The following parameters are needed to complete the solution:

(1) Pitch p_h of the unloaded helix (0.14 in.)

$$p_h = \frac{8Fd}{G'd_w^4} + d_w + h_c, \text{ in.} \qquad (10\text{-}5)$$

where h_c is the clearance between coils (usually 10% of the wire diameter or of the first term of Eq. 10-5) and G' is the shear modulus of the wire;

(2) Number of active coils N for a closed end coil

$$N = \frac{h_s}{d_w} - 2, \text{ coils} \qquad (10\text{-}6)$$

where h_s is the solid height, 0.60 in. (the height at load minus the dead coils divided by the wire diameter plus the clearance). For this case, N is 13 active coils;

(3) Free height h_f of the coil (1.94 in.)

$$h_f = Np_h + 2d_w, \text{ in.} \qquad (10\text{-}7)$$

The formula for the spring constant is given in Table 6-1 from which the constant is found to be 3.1 lb/in. Therefore, if the designer specifies an initial compression of one inch, there will be a safety factor of 1.6 because the load to be resisted was calculated to be 2 lb. Usually a factor of safety of 2 is preferred. However, if a high safety factor is required, the sensitivity of the fuze will be decreased.

10-2.1.2 Controlling Motion

Helical springs may also be used to control the motion of a mass. As an example, the locking action of a setback pin on another pin will be discussed. A suggested interlock is shown in Fig. 10-2.

During launching, setback forces drive the setback pin rearward which releases the safety pin so that the safety pin spring can pull the pin outward. Since the setback pin is free to return following launching, the designer must be certain that the safety pin moves far enough during or just after launching to prevent the setback pin from re-entering the locking hole after setback forces cease.

The motion of the safety pin is controlled by the frictional force $\mu W_p a'$, where μ is the coefficient of friction, W_p is the weight of the part, lb; and a' is the acceleration, g. During setback, a' is large so that $\mu W_p a' > F$ which predicts that the safety pin does not move during launching. Therefore, it must move fast enough after launching so that the setback pin does not re-enter the locking hole. (This is the marginal condition.)

Let the design set the condition that the safety pin will move a distance greater than 1/4 the diameter of the setback pin before it returns to lock the safety pin. The mass of the pin is 0.455×10^{-3} slug, its spring constant is 1.31 lb/in., and the coefficient of friction is assumed to be 0.20. This safety pin is acted upon by the spring, the friction force resulting from creep $\mu W_p a'$, and the frictional force f caused by the slider shutter

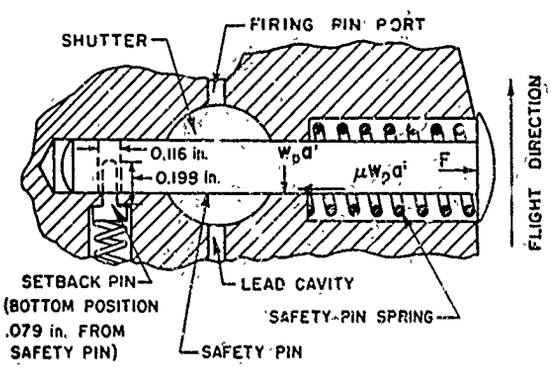

Figure 10-2. Interlocking Pin

*From *Mechanical Springs* by A.M. Wahl, Copyright 1963. Used by permission of McGraw-Hill Book Company.

pressing on the pin. The equation of motion for the pin is similar to Eq. 6-12 where f is 0.25 lb and a' is 10 g. To solve for the time to move the distance $x_o - S$, the initial compression of the spring x_o, must be known. This is typical of design problems: assumptions are made, computations are performed, and then the original dimensions are corrected if necessary.

Hence, if x_o is 1.5 in. and if the pin must move 0.029 in. (1/4 of 0.116 in.), the time interval will be 1.1×10^{-3} sec from Eq. 6-12. How far will the setback pin move in this time? Fig. 10-2 shows the pertinent dimensions for the setback pin. Let the spring constant be 1.31 lb/in. and the pin weight 0.0022 lb. To obtain the greatest distance that the pin will move, the effects of friction are neglected; in that case Eq. 6-5 will serve in which x_o is approximately 0.45 in. Thus x = 0.39 in. which means that the pin will move 0.06 in. Therefore, the setback pin must be bottomed at least 0.060 in. away from the safety pin.

The setback pin will strike the safety pin some time later than 1.1 msec, and the pin will not be able to re-enter the hole; hence the fuze will continue to arm.

10-2.2 SEQUENTIAL LEAF ARMING

For projectiles that do not rotate, arming is usually accomplished by setback forces. The motion of sliders and rotors that is impeded by setback can be used to achieve bore-safety. Accelerations resulting from a drop are higher (Fig. 15-5) but are not sustained as long as those resulting from firing (Fig. 5-2). Hence, many devices are built to discriminate between firing setback and impact forces due to drops.

Perhaps the easiest way to discriminate between the two is to build a device that is actuated only by the accelerations present under firing conditions. An approximation to this acceleration can be obtained with a sequential leaf mechanism[2]. The main feature in its design is the requirement of an extended acceleration, much longer than that present in a drop impact into any medium usually encountered. With a provision for return to the unarmed position, this device can withstand many drop impacts without becoming committed to arm.

Sequential leaf mechanisms are designed to respond to a threshold acceleration sustained for some period of time. The product of time and acceleration must be greater than that resulting from a drop but less than that produced by a properly fired projectile (see par. 6-5.4).

The three-leaf mechanism used as the safety device in the 81 mm Mortar Fuze, M532, is shown in Fig 10-3. Operation is as follows: Upon setback, the first leaf turns against its spring. When it rotates far enough, it permits the second leaf to rotate, and that in succession releases the last leaf. The last leaf moves out of the way to release the arming rotor.

The mechanism utilizes a large portion of the area under the acceleration curve because successive leaves are assigned to successive portions of the curve (see Fig. 6-19). Each leaf is designed to operate at a slightly different minimum acceleration level by using identical springs with geometrically similar leaves of different thicknesses. Each leaf operates when it experiences approximately half of the average acceleration occurring in the interval to which it is assigned For example, the first leaf is designed to operate when it experiences an acceleration of approximately 450 g for 2.5 msec. The total design velocity change is approximately 110 ft/sec.

The mechanism has been shown to be safe when subjected to 40-ft drops. This safety results from the fact that the impact velocity in a 40-ft drop (about 50 ft/sec) is less than half the design velocity change for the mechanism. However, the parachute drop imposes the most stringent requirements on this mechanism[3]. It specifies that the fuze must withstand the ground impact forces that result when it is delivered by parachute. The mechanism will prevent arming when the ammunition is delivered by a properly functioning parachute because the impact velocity is less than that for a 40-ft free-fall drop. However, if the parachute malfunctions during delivery, the velocity change at impact is greater than the design velocity change. It is, therefore, possible that a fouled parachute delivery could produce the minimum design acceleration for a length of time sufficient to arm the mechanism.

10-3 FUZE COMPONENTS FOR SPIN-STABILIZED PROJECTILES

The arming operations of munitions stabilized by spin may make use of the forces due to the spin on the fuze parts. Sliders can be moved by the centrifugal force field, rotors may be

repositioned by turning, and detents can be withdrawn against spring pressure.

10-3.1 SLIDERS

Sliders form a convenient way to hold the detonator out-of-line. Here the designer is interested in the time interval, after firing the projectile, during which the fuze is safe or the slider has not moved. He calculates this from estimated dimensions of the slider. The time interval requirement may be stated in this fashion: (1) the time interval for sliders must not begin until after the projectile leaves the gun because the fuze must be bore safe (the separate time delay, required while the fuze is in the bore, is usually achieved by setback), (2) the fuze must not arm below a certain spin velocity (the centrifugal field is too weak to cause arming), and (3) the fuze must definitely arm above a certain spin velocity. These concepts are discussed more fully in par. 9-2.2.

If the slider is placed at an angle less than 90° to the spin axis, setback forces will have a component that opposes radial outward motion of the slider. This provision can satisfy requirement (1). For a nose fuze, a convenient angle is that which makes the slider perpendicular to the ogive. An angle of 75° will serve as a first approximation. The final angle depends on the ratio of setback to centrifugal forces.

A retainer spring can satisfy requirement (2) as well as the rough handling requirements. It remains to adjust the spring constant and the position of slider mass center with respect to the spin axis. Fortunately, requirement (3) is obtained with the same calculations.

Since the slider will generally continue to move once it starts (the spring force is balanced by the increasing centrifugal force and the kinetic friction coefficient is less than the static one), the designer needs to know the conditions under which the slider will move. Set $x = x_o$ in Eq. 6-29 and reduce it to

$$m\ddot{x} = -kx_o - Wa'(\sin\phi + \mu\cos\phi) + m\omega^2 r_o(\cos\phi - \mu\sin\phi) \tag{10-8}$$

For requirement (1) $\ddot{x} < 0$ for all possible values of ω, for requirement (2) $\ddot{x} < 0$ for $a' = 0$ and where ω is the lower spin specification, and for requirement (3) $\ddot{x} > 0$ where a' is the creep deceleration and ω is the upper spin specification.

As an example, suppose it is desired to find the angular spin velocity necessary to arm a fuze

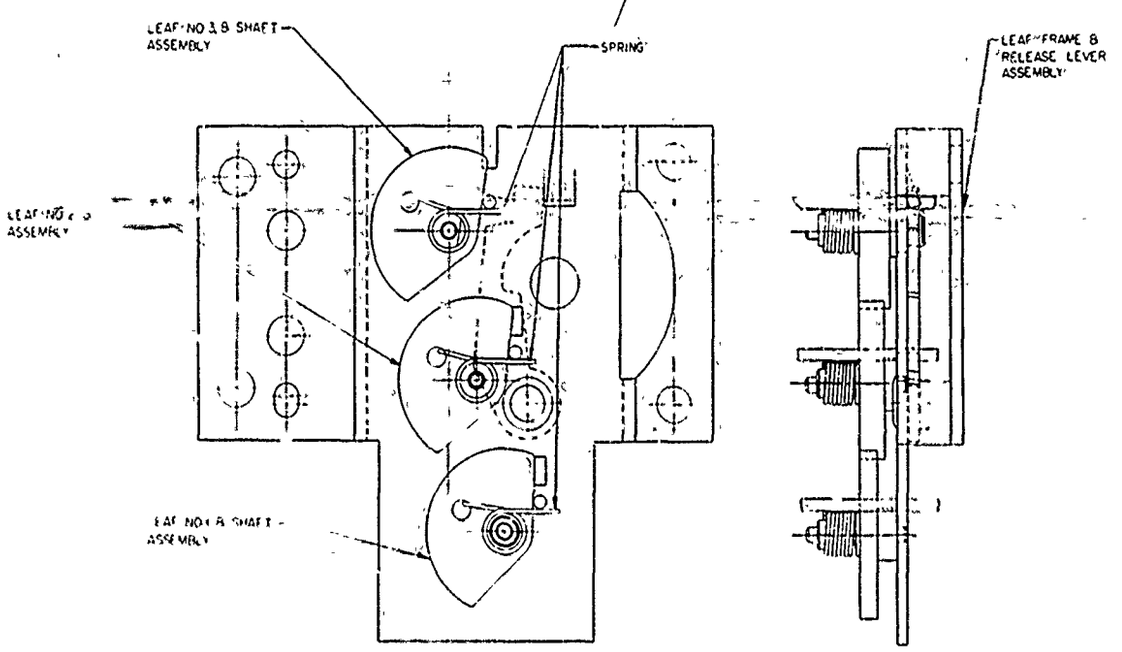

Figure 10-3. Leaf Arming Mechanism of Fuze, M532

having the slider shown in Fig. 6-7. The data are $\phi = 15°$, $x_o = 0.300$ in., $r_o = 0.062$ in., $\mu = 0.2$, and the spring constant $k = 1.0$ lb/in. Table 10-1 shows a summary of the conditions and calculations. For $\ddot{x} = 0$, $kx_o + Ma'(\sin\phi + \mu\cos\phi) = m\omega^2 r_o(\cos\phi - \mu\sin\phi)$ which implies that

$$\omega^2 \geq \frac{kx_o + Ma'(\sin\phi + \mu\cos\phi)}{mr_o(\cos\phi - \mu\sin\phi)} \qquad (10\text{-}9)$$

The specifications state that this fuze must not arm at 2400 rpm but must arm at 3600 rpm. Calculations show that the specifications are satisfied.

10-3.2 ROTOR DETENTS

Another device used in fuzes to obtain detonator safety is a spherical ball rotor as shown in Fig. 6-22. The ball in a spinning munition tries to align its polar moment of inertia axis with the spin axis (see par. 6-5.7). This alignment must be prevented both before firing and until the projectile clears the gun. Usually detents hold the rotor in the unarmed position. In turn the detents are held by a spring.

A 57 mm recoilless rifle projectile will serve as an example. Ballistic constants are the following: muzzle velocity = 1200 fps, weight = 2.75 lb, rifling twist of 20 cal/turn, and a propellant pressure at the muzzle of 2000 psi. Eq. 5-4 states that the spin angular velocity is 2014 rad/sec while Eq. 5-2 shows that the projectile acceleration at the muzzle is 2876 g.

To keep the rotor dynamically balanced, four cavities are drilled radially into it for the detents. Because of the rotor's small size, one turn of a flat spiral spring serves to hold the detents in the ball. How long should the designer make the detents and how far should they penetrate into the ball?

Suppose the detent spring is a beryllium copper strip 2.505 in. long, 0.115 in. wide and 0.005 in. thick. This is wound into a coil 0.65 in. in diameter when unloaded. Therefore, the rotor unit will appear approximately as shown in Fig. 10-4. A spring stop is needed to prevent the spring from walking around the ball.

By taking advantage of the axis of symmetry through the spring stop, deflections need be calculated for only two detents. The deflection of the spring at detent B will be calculated because if B can move far enough to release the rotor, then A, being closer to the open end of the spring, will also release the rotor. The spring deflection at B will be caused by three effects of centrifugal forces: (1) the cantilever action produced at B by the motion of detent A, (2) the motion of detent B, and (3) the expansion of the spring itself.

Spring analysis shows that the radial deflection of the spring y_B at the detent B by a force F_A at the detent A on Fig. 10-4 is

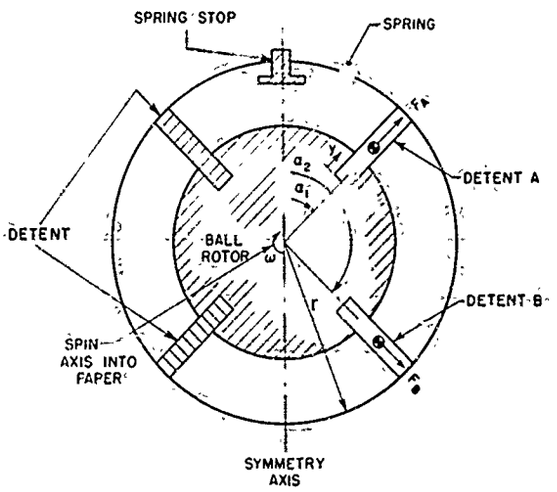

Figure 10-4. Spiral Spring for Ball Rotor

TABLE 10-1. SUMMARY OF CONDITIONS AND CALCULATIONS

General Conditions						Actual Values		
Requirement	x	a'	ω	Arm	Spring in Use	a', g	kx_o, lb	ω to arm, rev/min
(1)	< 0	very large setback	reasonable value	No	No	13,600	0	59,000
	< 0	muzzle value setback	muzzle spin	No	No	2,500	0	25,000
(2)	< 0	0	muzzle spin	No	Yes	0	0.300	2,980
(3)	> 0	< 0 (creep)	muzzle spin	Yes	Yes	−10	0.300	2,520

$$y_B = \frac{F_B r^3}{E I_1}\left[\left(\frac{\pi}{2} - \frac{\alpha_2}{2}\right)\cos(\alpha_1 - \alpha_2) + \sin\alpha_2 \cos\alpha_1\right] \quad (10\text{-}10)$$

Terms are defined in the figure. This equation can be used for effects (1) and (2) but $\alpha_1 = \alpha_2$ for effect (2). The third effect, the expansion of the spring y_{BC}, is calculated with the equation

$$y_B = \frac{F_B r^3}{E I_1}\left[(1 + \cos\alpha_2) + \left(\frac{\pi}{2} - \frac{\alpha_2}{2}\right)\sin\alpha_2\right] \quad (10\text{-}11)$$

where

E = Young's modulus, psi

I_1 = second moment of the cross-sectional area, in.^{4}

ρ = density of the spring, lb/ft^3

t_s = spring thickness, in.

r = radius of the spring loop, ft

Note that $F = mr_{cg}\omega^2$ for the detent where r_{cg} is the radial distance to the center of gravity of the detent. Fig. 10-5 shows two extremes for the length of the detent. The ball diameter is 0.563 in. and the spring diameter is $(0.136 + 2.505)/\pi = 0.841$ in. Therefore, the length of detent extending outside of the ball is 0.139 in. The distance to the center of mass for the detent is

$$r_{cg} = \left(0.281 + 0.139 - \frac{l}{2}\right), \text{ in.} \quad (10\text{-}12)$$

and

$$y = (l - 0.139), \text{ in.} \quad (10\text{-}13)$$

where l is the length of the detent, in., and y is the radial deflection of the detent, in.

Since the detent mass is $m = \rho\, l A_p$, the force F is

$$F = \rho\, l A_p \left(0.0353 - \frac{l}{2}\right)\omega^2, \text{ lb} \quad (10\text{-}14)$$

where ρ is the density of the brass detent, lb/in.^{3}, and A_p is the cross-sectional area of the detent, in.^{2} Thus by combining Eqs. 10-10, 10-11, and 10-12, the length of the detent can be determined as a function of the spin velocity ω

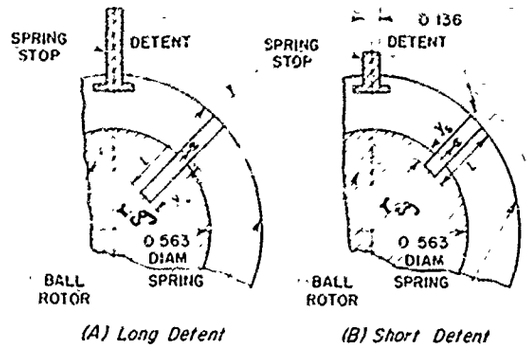

Figure 10-5. Effect of Detent Length

$$y_{BA} + y_{BB} + y_{BC} = y(\omega) \quad (10\text{-}15)$$

The following data apply

$\alpha_2 = 120°$

$\alpha_1 = 60°$

$r = 0.0360$ ft

$t_s = 0.005$ in.

$\rho = 531$ slug/ft^3

$E = 18 \times 10^6$ psi

$I_A = 1.20 \times 10^{-9}$ in.^{4}

$A_p = 8.62 \times 10^{-5}$ ft^2

The expression for l as a function of ω becomes

$$l - 0.0116 = (0.736l - 10.38l^2 + 0.00155)\,\omega^2 \times 10^{-5} \quad (10\text{-}16)$$

The rotor must not arm at 2525 rpm. Hence, l can be 0.246 in. The spring has been deflected $0.432 - 0.650/2 = 0.107$ in. during assembly so that the detent will not move until the spin reaches at least 2525 rpm. What spin is required with an initial spring deflection of 0.107 in. if l is 0.246 in. long? According to Eq. 10-16, the

detent will release the rotor at a spin of 2560 rpm which is in the specified range.

There is one feature that has been neglected: the torque of the ball rotor squeezes the detents laterally. This will put a friction force on the detents, which will hinder their tendency to move outward. Therefore, the spin must be greater than the value calculated to cause arming, or the length of the detents can be less. In the actual fuze, the detent is only 0.208 in. long which according to Eq. 10-16 would release the rotor at 2370 rpm.

10-3.3 ROTARY SHUTTERS

Since the bursting charges of high explosive projectiles are relatively insensitive to shock, a comparatively powerful detonation is necessary to initiate them. This is provided by a booster. For example, Booster M21A4 is used in certain fixed, semi-fixed, and separate loading projectiles. Fig. 10-6 shows this booster with two major parts: (1) the booster cup which contains a tetryl charge, and (2) a brass body containing a tetryl lead and a detonator-rotor assembly. The latter provides an out-of-line feature within the booster in order to make it safe, if handled alone.

The rotary shutter is used to pivot the detonator into alignment with the other explosive elements in fuze and booster. The center of gravity of the rotor is not on the center line of the rotor pivot and not on the spin axis. The centrifugal force that is developed will therefore rotate the rotor. Detents are used to lock the rotor in both unarmed and armed position.

The shutter action is described in par. 6-5.5 and illustrated in Fig. 6-20. The torque caused by the projectile spin is calculated with Eq. 6-56 in which the driving torque term is

$$G = m\omega^2 \; r_s r_p \; \sin\phi \qquad (10\text{-}17)$$

where m is the mass of the shutter, slug; ω is the angular velocity, rad/sec; ϕ is an angle, rad; and r_s and r_p are radii, in., all defined in Fig. 6-20. In order for the shutter to turn, G must be greater than the frictional torque G_f (after the locking detents are removed).

When the angle becomes zero, the driving torque ceases; therefore, the detonator must move into alignment before ϕ becomes zero.

Fig. 6-20 shows the actual rotary shutter of

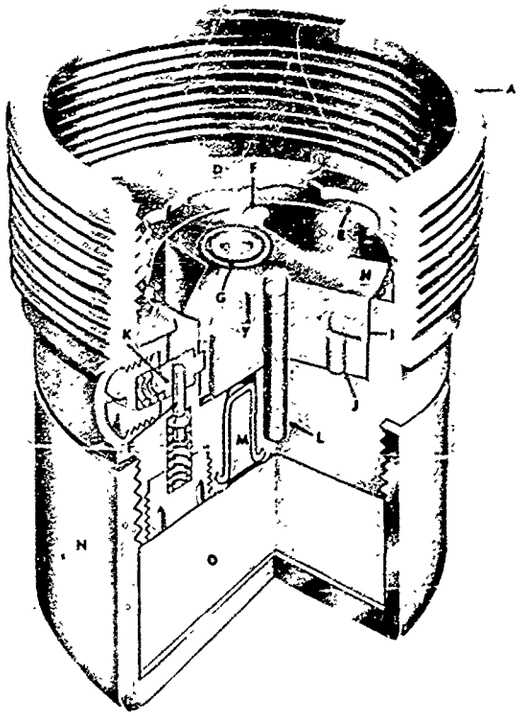

A – BODY	J – ROTOR LOCK PIN LOCK
D – COVER	K – CENTRIFUGAL PIN
E – ONION SKIN PAPER	L – ROTOR PIVOT PIN
F – ROTOR STOP PIN	M – LEAD
G – DETONATOR	N – BOOSTER CUP
H – ROTOR	O – BOOSTER CHARGE
I – ROTOR LOCK PIN	P – CENTRIFUGAL PIN LOCK PIN

Figure 10-6. Booster, M21A4

Booster, M21A4. Basically, the shutter is a disk with two large segments removed. It fits a circular cavity. The segments are cut out to create an unbalance so as to shift the mass center to a point diametrically opposite to the detonator. This will insure that the detonator can move toward the spin axis. Since these rotors can be sliced from an extruded bar or made by a sintered metal technique, it is not difficult to produce this shape.

With the limited space allotted to the rotor, r_s and r_p will be small (on the order of 0.1 in.). Eq. 6-56 indicates the torque required to accelerate the rotor. Suppose the frictional torque effectively acts at the center of gravity; it will be

$$G_f = \mu W_p a' r_p, \text{ lb-ft} \qquad (10\text{-}18)$$

in which a' is setback or creep acceleration, and

W_r is the weight of the rotor, lb. Table 10-2 lists the various conditions for $\mu = 0.2$.

If the rotor moves, t_r must be greater than t_s or

$$\omega^2 t_s \sin\phi \quad a'\mu g \qquad (10\text{-}19)$$

For the above cases, $t_s = 0.22$ in. and $\phi = 1.15°$.

TABLE 10-2. SUMMARY OF CALCULATIONS

	a', g	W_r, lb	μ	t_s, ft	t_r, lb-ft
Setback	20,000	0.050	0.2	0.00833	1.66
Creep	10	0.050	0.2	0.00833	8.33 10^{-4}

At what spin will this condition be true? By solving Eq. 10-19, ω is found to be 550 rev/sec for setback and 12 rev/sec for creep conditions. Thus the booster will not arm during setback but will arm once the projectile is out of muzzle. Arming probably occurs largely in that interval when setback changes to creep and g forces are momentarily zero.

In order to obtain a rough estimate of the time to arm, the designer may use the expression

$$(\phi_o - \phi) = \tfrac{1}{2}\ddot{\phi}\, t^2 \qquad (10\text{-}20)$$

where $(\phi_o - \phi)$ is the angular displacement rad, and the angular acceleration, $\ddot{\phi}$, is assumed constant for the time t. From Eq. 6-56—with the conditions $m = 0.0016$ lb-slug, $\omega = 12{,}000$ rpm, and $I = 1.4 \times 10^{-6}$ slug-ft^2—the initial acceleration $\ddot{\phi}$ is 0.154×10^6 rad/sec^2. If $(\phi_o - \phi) = 1.71$ rad, then t will be 4.5 msec.

Once the arming time is found to be within the proper order of magnitude, the designer may solve the problem by numerical integration or he may build a model and test it. Usually a certain amount of computational work will be worthwhile; however, this depends upon how valid the assumptions are and how closely the mathematics will describe the actual conditions.

10-3.4 SPECIAL CONSIDERATIONS FOR ROCKET-ASSISTED PROJECTILES

When designing fuzes for use with rocket-assisted projectiles, certain factors need to be considered. Mechanical time fuzes for these rounds require longer running times and might undergo angular acceleration during flight (while the timing mechanism is in operation). Also, the levels of setback and spin in rocket-assisted projectiles will normally be lower, for the same ranges, than levels for regular service projectiles.

In addition to designing the fuze so that it will have to sense two different environments before arming, special considerations are necessary to provide safety in the event of rocket motor malfunction. Rocket motors malfunction if the motor fires when it is not desired, producing a projectile with a longer range than planned. Alternatively, the motor may not fire when desired, producing a short-range projectile. In the former case, a sensor would be desirable to function the projectile in the air before it passes beyond the intended target. In the latter case, it would be desirable for the fuze to dud any projectile that falls short of the target.

10-4 MECHANICAL TIME FUZES

Mechanical time fuzes are used to provide a preset functioning time. They are applicable to antiaircraft projectiles, bombs set to burst above ground, or artillery projectiles set for air burst. They are initiated when they are launched rather than when they sense the target. A large number of timing mechanisms has been employed in fuzes in the past[4]. Note that rocket-assisted projectiles will require longer running times and might undergo angular acceleration during flight (while the timing mechanism is in operation). For details of clockwork design, see par. 6-6.

10-4.1 CLOCKWORK DRIVE

In current fuzes, the clockwork is driven by a prewound clock-type power spring (see par. 6-2.3.1). Older fuzes in spinning projectiles were sometimes driven by the action of two centrifugal weights in the centrifugal field produced by the spinning projectile. Although this drive is no longer used, it is described here to illustrate a design approach.

Fuze, MTSQ, M502A1, is an example of a fuze having a centrifugal drive. Its timing movement is shown in Fig. 10-7[5]. The centrifugal weights attempt to move radially thereby applying a torque to the main pinion which is geared to the escapement wheel and lever. The safety lever plate locks the escapement lever in position until the

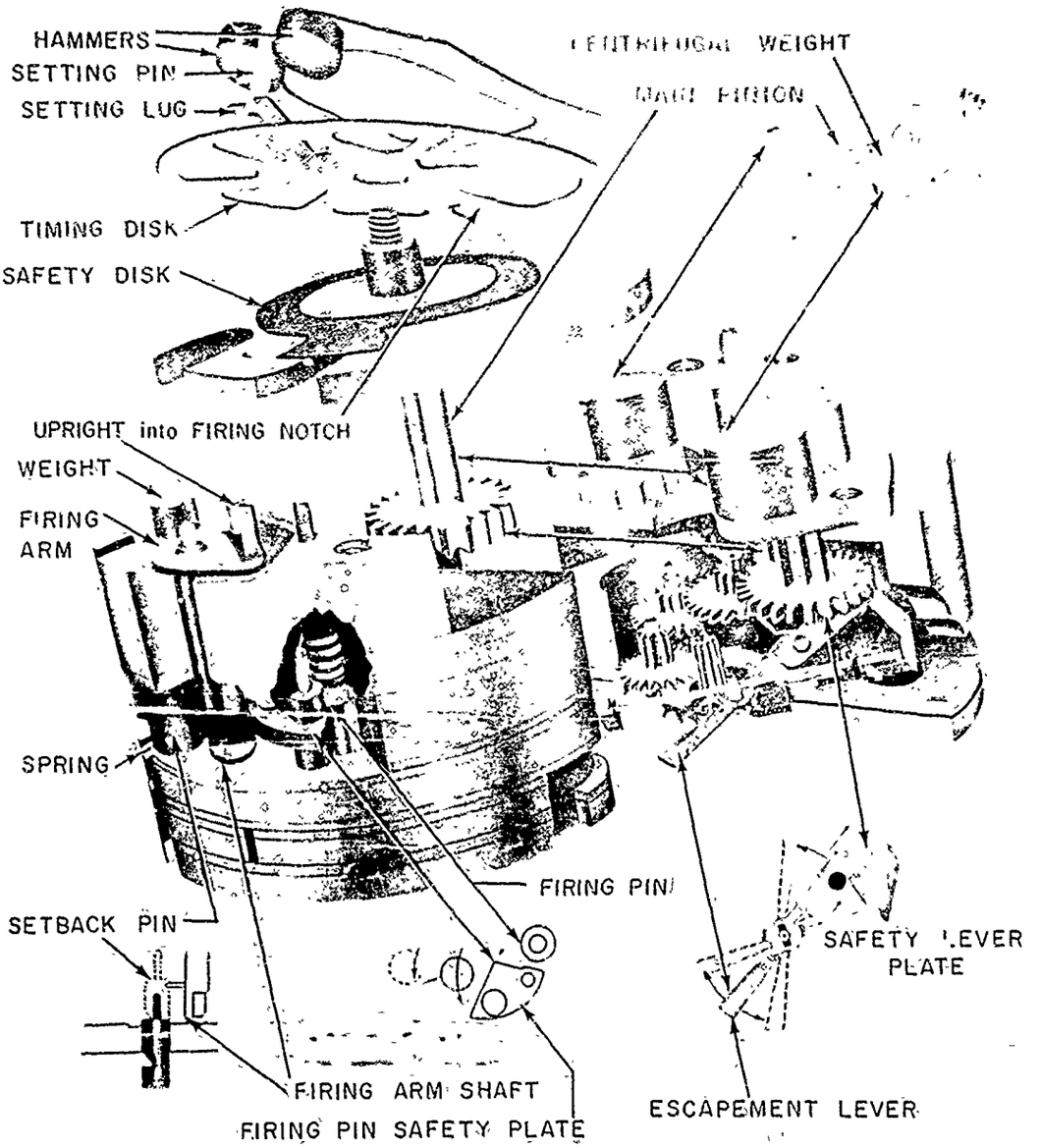

Figure 10-7. Timing Movement of Fuze, MTSQ, M502A1

fuze is spun at a rate approaching that produced during launching. The firing pin is spring-loaded but is held in position by the firing pin safety plate until the firing arm rotates into the firing notch on the timing disk. A setback pin prevents premature rotation of the firing arm shaft until it shifts on setback. The timing disk is rotated with respect to safety disk and main pinion when the time delay is set. Upon launching the projectile, the hammers depress the setting lug from the setting pin and the setback pin drops away from the firing arm shaft. As the projectile spins, the safety lever plate moves so that the escapement lever is free to swing. Release of the escapement lever allows the centrifugal weights to move the main pinion (the gear train is free to move) and hence to rotate the timing disk.

When the upright of the firing arm indexes with the firing notch in the timing disk, the firing arm shaft rotates and releases the firing

pin safety plate. The firing pin spring then drives the firing pin into the primer.

10-4.2 DESIGN OF ONE COMPONENT

The fuze can be used only in spin-stabilized projectiles because centrifugal force is required to drive the timing mechanism. The centrifugal weights, acting as the power source for the escapement, move radially outward thereby creating a torque on the centrifugal gear about its center shaft. This gear forces the main pinion to turn. The torque on the centrifugal gear is expressed in Eq. 6-56 as

$$G = m\omega^2 \; r_s r_p \; \sin\phi \qquad (10\text{-}21)$$

where G is the torque on the pivot shaft, m is the mass of the gear segment with its center of mass at A, the radii r_p and r_s are shown in Fig. 10-8, and ϕ represents the angle through which the gear could be turned by this torque.

For this gear, the mass is 0.014 slug; r_s and r_p are 0.48 and 0.16 in., respectively; and ϕ is 135°. Let us assume this projectile and fuze are fired from a 105 mm howitzer with a velocity of 2200 fps at a spin of 225 rps (see Fig. 5-5). This produces an applied torque of 39.5 in.-lb. The gear ratio is 275 so that the torque on the escapement shaft is decreased to 0.0144 in.-lb. However, because there are friction and bearing losses within the gear train, only 28% of the theoretical torque will appear at the escapement shaft or 0.0040 in.-lb. Since two centrifugal gears are always used in a drive system of this type, all torque values should be doubled. This value is of the same order of magnitude as quoted in par. 6-6.3 where the clockwork escapement is discussed. Particular attention is given to escapements in that paragraph because they represent the heart of the clockwork.

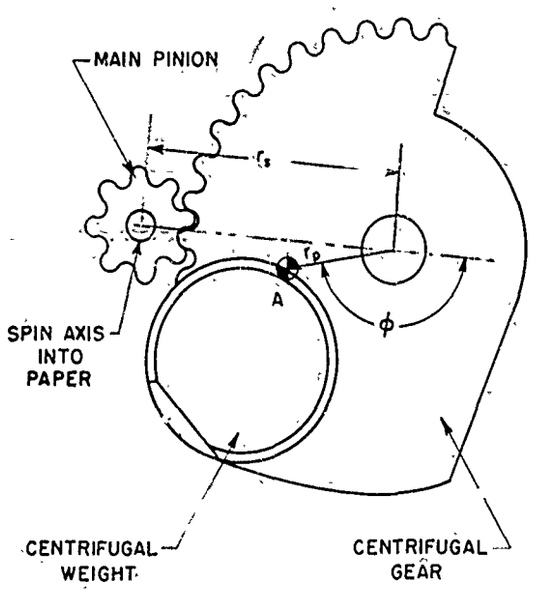

Figure 10-8. Centrifugal Drive

The timing disk rotates with the main pinion so that the centrifugal gear rotates the timing disk at a rate controlled by the escapement lever. Thus the clockwork measures the functioning delay because the explosive train is not initiated until the firing pin is released. The firing arm is spring-loaded and counterbalanced to assure that it will release the firing pin when the firing notch presents itself.

10-5 SMALL ARM FUZES

Cal .30 and cal .50 ammunition do not require separate fuzing with out-of-line detonator safety. The quantity of explosives and incendiary mixes used in them is so small and the damage possible due to propagation is minimal. The chemical compositions in these bullets react on impact. For example, incendiary and spotting charges will ignite themselves upon impact. Tracer and some incendiary cartridges are ignited by the propellant through a pyrotechnic delay[6].

On the other hand, 20 mm and 30 mm rounds require fuzes having all safety features just like larger projectiles. There must be two independent arming actions[7]. Small arm rounds differ from larger calibers in three main respects:

(1) Obviously, they are smaller. The initiation and arming mechanisms must be compact because little space is available for them. Arming devices most commonly used are disk rotors (see par. 6-5.1), ball rotors (see par. 6-5.7), and spiral unwinders (see par. 6-4.2). While the booster is small—because the main explosive filler is small—it nevertheless occupies a significant portion of the space allotted to the fuze.

(2) Spin rates of small arm fuzes are higher than those of larger sizes. Rates of 35,000 to 100,000 rpm are common.

(3) Small arm fuzes are subjected to additional forces while being fed into the weapon. During feeding from magazine or belt into the

chamber of the weapon, the cartridges, and therefore the fuzes, are subjected to acceleration and impact in both longitudinal and transverse directions. High rates of fire require considerable velocities in the feeding operation that leads to severe impact loading on sudden checking in the chamber.

Fig. 10-9 shows a typical small arm fuze, the 20 mm point-detonating Fuze, M505A3. The fuze is used in the M210 and M56E2 Cartridges. Its construction is simple—consisting of a fuze body with windshield, a firing pin that shears on impact, an unbalanced rotor that holds the detonator out-of-line, and a sealed booster assembly. The rotor is restrained from turning by a C-ring detent that will release the rotor after setback ceases and a spin of 70,000 rpm is reached.

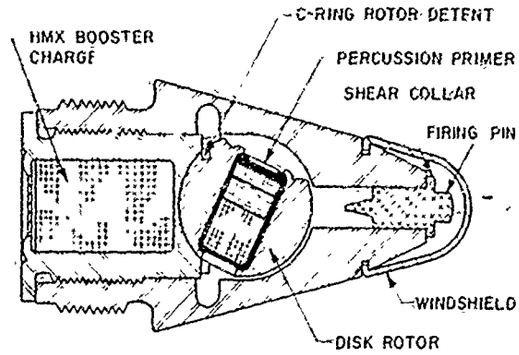

Figure 10-9. 20 mm Fuze, M505A3

REFERENCES

1. *Handbook of Ballistic and Engineering Data for Ammunition (U)*, Ballistic Research Laboratories, Aberdeen Proving Ground, Md., Vol. 1, July 1950, p. 60-1-49 (Confidential).
2. William E. Ryan, *Analysis and Design; Rotary-Type Setback Leaf S&A Mechanisms*, U.S. Army Harry Diamond Laboratories, Report TR-1190, Washington, D.C., 11 February 1964.
3. R. O. Nitzsche, *Effects of Parachute Delivery Requirements and Recent Drop Studies on Design of Fuze Mechanisms (U)*, Second Fuze Symposium, Diamond Ordnance Fuze Laboratories, (now U.S. Army Harry Diamond Laboratories), Paper No. 12, Washington, D.C., 13 March 1966 (Confidential).
4. *Survey of Mechanical Impact Devices for Use on Mechanical Time Fuzes*, Hamilton Watch Co., Contract DA-36-038-ORD-18508, June 1957.
5. *Fuze, MTSQ, M502A1*, Frankford Arsenal, Notes on Materiel, Report MTF-8, Philadelphia, Pa., January 1954.
6. AMCP 706-185, Engineering Design Handbook, *Military Pyrotechnics, Part One, Theory and Application.*
7. AMCP 706-239 (S), Engineering Design Handbook, *Small Arms Ammunition (U).*

CHAPTER 11
FUZES LAUNCHED WITH LOW ACCELERATION

11-1 GENERAL

Chapter 10 discusses examples of fuzes undergoing high accelerations during launching. Accelerations on the order of 10,000 to 50,000 g and rotational rates of 10,000 to 100,000 rpm are common in those items.

Munitions having accelerations of less than 10,000 g may be classified together for purposes of describing the force fields useful for arming. Examples are rockets, guided missiles, grenades, and some mortar projectiles. Rockets have accelerations in three ranges: up to 40 g, from 40 to 400 g, and 400 to 3000 g. The last are usually obtained by virtue of an assist (gun-boosted rockets). Guided missiles generally have accelerations of less than 100 g. Hand grenades have but a few g's, and rifle grenades may experience accelerations up to 1000 g. On the other hand, the acceleration of mortar projectiles depends upon the amount of charge used. Hence, their fuze design is more complicated.

Therefore, the forces available to move fuze components for arming in munitions launched with low acceleration are smaller than those for high-acceleration projectiles. Fortunately, the time duration of this acceleration is comparatively long, from two to four seconds in some rockets. In these rockets, accelerations of 20 g may be developed at launching. The bulk of the munitions launched with low acceleration are fin-stabilized. With a few exceptions, therefore, centrifugal forces are not available for arming.

A differentiation will be made between rockets and guided missiles. In military use, the term rocket describes a free flight missile, merely pointed in the intended direction of flight, and depending upon a rocket motor for propulsion. Guided missiles, on the other hand, can be directed to their target while in flight or motion, either by a preset or self-reacting device within the missile, by radio command outside the missile, or through wire linkage to the missile. Note also that a ballistic missile, while commonly grouped with guided missiles, is guided in the upward part of its trajectory but becomes a free falling body in the latter stages of its flight through the atmosphere.

11-2 ROCKET FUZES

Rocket fuzes usually cannot depend upon spin for stabilization or arming. In general, the fuzes in modern high-g rockets are of the same general type as those used in artillery projectiles. Arming methods suitable for rocket fuzes are discussed in Chapters 6—8. Two types of rocket fuzes are mentioned because they are of historical interest.

11-2.1 HISTORICAL FUZES

Early rocket fuzes had wind-driven generators or were gas armed. Wind-driven generators depend upon air flowing past the round while it is in flight to turn a generator which supplies the voltage necessary for fuze operations. Wind-driven generators were popular for electronic circuits contained in low acceleration, nonspin munitions because they were small, rugged, and had a long shelf life. However, while these generators were theoretically very suitable for rocket fuzes, they introduced problems of sealing and position-dependence in the round which have caused them to be practically dropped from consideration. The fuze of today is entirely sealed, has no external pull pins or vanes, and in many cases can be located anywhere in the round.

Gas-armed fuzes used the pressure developed by the rocket motor to operate some device. For proper design of such a system, one must determine the available pressure as a function of time in order to know how long it would take to complete a given action. Gas-armed fuzes can and have been used effectively, but their use makes the fuze dependent on the detailed motor design and closure pressure. The tendency is to eliminate fuze mechanisms that can be used only with one motor and warhead. While it is true that a fuze, as such, is designed for a particular round and ogive, modern fuzes are becoming much more versatile. Hence, gas-armed fuzes are now practically obsolete.

11-2.2 SELF-DESTRUCTION

Self-destruction devices are added to guided missiles (and projectiles) designed for defeat of aircraft. Such devices are to prevent armed ammunition from falling to the ground and causing damage in friendly territory. The following mechanisms, many of which are also used for arming and have been described elsewhere in this handbook, are used to provide self-destruction:

(1) An ordinary mechanical time fuze containing a clockwork that will detonate the bursting charge at the end of a preset time interval; if the target range is too short, the missile will overshoot, in which case the clockwork acts as a self-destruction device (see par. 10-4).

(2) A pyrotechnic delay eler it that is usually designed to be initiated on setback with a separate firing pin; the output of the delay element ties in with the explosive train (see par. 4-4.1).

(3) In case of a spinning rocket, spin decay devices may be used; the devices may consist of sequential lever mechanisms (operated by centrifugal force), of detents, or of centrifugal weights that release a spring-loaded firing pin (see par. 6-5).

(4) A barometric device which will initiate the weapon when it has fallen below a predetermined height.

11-3 GUIDED MISSILE FUZES

Guided missile fuzes contain an arming mechanism and an explosive train just as other fuzes[1]. However, the various fuze components may be separated from the warhead as well as from each other. The term for the separate arming device is the safing and arming (S&A) mechanism. The initiation sources may be physically separated from this mechanism. The S&A mechanism may also be separated from the warhead, the only connection being a length of detonating cord or an electric cable. S&A mechanisms are the subject of a compendium[2].

The guided missile is a large, expensive item with high functioning probability required so that multiple fuzing is commonly employed. The advantage of the multiple paths is that the probability of failure decreases exponentially. For example, one warhead detonating system of a missile consists of two paralleled S&A mechanisms, each containing a detonator. Then five lengths of detonating cord fitted with PETN relay caps connect the output of these mechanisms to three warheads. Only one of the paths need be completed for successful missile operation.

Even though several of the fuzes described in the foregoing text might operate in guided missiles, the conditions on these mechanisms warrant designs peculiar to them alone. At the present time, missiles are limited to an acceleration of about 60 g; therefore, the arming mechanism must be designed to operate with this acceleration. Although a wound spring might be used as a source of power, as a general rule any arming system that uses stored energy is thought to be undesirable. Perhaps the best power source for these low accelerations involves a time acceleration integrator.

Suppose an arming device is required for a hypothetical missile that has the following characteristics: (1) it shall arm when under an acceleration of 11 g if this acceleration lasts for five seconds, and (2) it shall not arm when under an acceleration less than 7 g for a period of one second. Consider the arming device shown in Fig. 11-1. Setback forces encountered during acceleration of the missile apply an inertial force to the slider. Thus after a specified time, the detonator will be aligned with the booster and the latch will drop down to lock the slider in the armed position. If at any time during this process the acceleration drops below 7 g, the slider must be returned to its initial position by a return spring. Because of its weight, the slider would move too fast under these accelerations; hence, a restraining force is necessary. It is possible that a clockwork escapement may be used to regulate the motion. The following data and assumptions will help to determine the size of springs and weights: (1) neglect friction in the system, (2) a tangential force is needed to overcome the initial restraint of the clockwork, (3) the weight to be found includes the inertial effects of the whole system, and (4) the spring is not stretched beyond its elastic limit.

In order to prevent motion of the slider under setback accelerations less than 7 g, an initial tension $F = kx_o$ is given to the assembled spring. The differential equation of motion can be used to determine the restraining force F_r

$$\frac{W}{g}\ddot{x} = a'W - kx - F_r \qquad (11\text{-}1)$$

11-2.2 SELF-DESTRUCTION

Self-destruction devices are added to guided missiles (and projectiles) designed for defeat of aircraft. Such devices are to prevent armed ammunition from falling to the ground and causing damage in friendly territory. The following mechanisms, many of which are also used for arming and have been described elsewhere in this handbook, are used to provide self-destruction:

(1) An ordinary mechanical time fuze containing a clockwork that will detonate the bursting charge at the end of a preset time interval; if the target range is too short, the missile will overshoot, in which case the clockwork acts as a self-destruction device (see par. 10-4).

(2) A pyrotechnic delay eler it that is usually designed to be initiated on setback with a separate firing pin; the output of the delay element ties in with the explosive train (see par. 4-4.1).

(3) In case of a spinning rocket, spin decay devices may be used; the devices may consist of sequential lever mechanisms (operated by centrifugal force), of detents, or of centrifugal weights that release a spring-loaded firing pin (see par. 6-5).

(4) A barometric device which will initiate the weapon when it has fallen below a predetermined height.

11-3 GUIDED MISSILE FUZES

Guided missile fuzes contain an arming mechanism and an explosive train just as other fuzes[1]. However, the various fuze components may be separated from the warhead as well as from each other. The term for the separate arming device is the safing and arming (S&A) mechanism. The initiation sources may be physically separated from this mechanism. The S&A mechanism may also be separated from the warhead, the only connection being a length of detonating cord or an electric cable. S&A mechanisms are the subject of a compendium[2].

The guided missile is a large, expensive item with high functioning probability required so that multiple fuzing is commonly employed. The advantage of the multiple paths is that the probability of failure decreases exponentially. For example, one warhead detonating system of a missile consists of two paralleled S&A mechanisms, each containing a detonator. Then five lengths of detonating cord fitted with PETN relay caps connect the output of these mechanisms to three warheads. Only one of the paths need be completed for successful missile operation.

Even though several of the fuzes described in the foregoing text might operate in guided missiles, the conditions on these mechanisms warrant designs peculiar to them alone. At the present time, missiles are limited to an acceleration of about 60 g; therefore, the arming mechanism must be designed to operate with this acceleration. Although a wound spring might be used as a source of power, as a general rule any arming system that uses stored energy is thought to be undesirable. Perhaps the best power source for these low accelerations involves a time acceleration integrator.

Suppose an arming device is required for a hypothetical missile that has the following characteristics: (1) it shall arm when under an acceleration of 11 g if this acceleration lasts for five seconds, and (2) it shall not arm when under an acceleration less than 7 g for a period of one second. Consider the arming device shown in Fig. 11-1. Setback forces encountered during acceleration of the missile apply an inertial force to the slider. Thus after a specified time, the detonator will be aligned with the booster and the latch will drop down to lock the slider in the armed position. If at any time during this process the acceleration drops below 7 g, the slider must be returned to its initial position by a return spring. Because of its weight, the slider would move too fast under these accelerations; hence, a restraining force is necessary. It is possible that a clockwork escapement may be used to regulate the motion. The following data and assumptions will help to determine the size of springs and weights: (1) neglect friction in the system, (2) a tangential force is needed to overcome the initial restraint of the clockwork, (3) the weight to be found includes the inertial effects of the whole system, and (4) the spring is not stretched beyond its elastic limit.

In order to prevent motion of the slider under setback accelerations less than 7 g, an initial tension $F = kx_o$ is given to the assembled spring. The differential equation of motion can be used to determine the restraining force F_r

$$\frac{W}{g}\ddot{x} = a'W - kx - F_r \qquad (11\text{-}1)$$

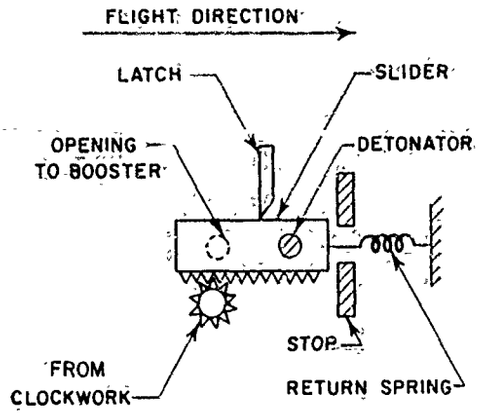

Figure 11-1. Safing and Arming Mechanism

where $\ddot{x}$ is the acceleration of the weight with respect to the mechanism, a' is the acceleration of the mechanism in g, and k is the spring constant. By assuming that the velocity of the weight reaches a steady value quickly and then remains constant until the arming process is completed, a long arming time can be realized. The expression for the velocity $\dot{x}$ may take the form

$$\dot{x} = v_o \left(1 - e^{-t/T_c}\right) \qquad (11\text{-}2)$$

in which the velocity is zero at $t = 0$ and approaches v_o, the initial velocity, as t becomes infinite. The time constant of the equation T_c fixes the time for $\dot{x}$ to reach 37% of v_o. By integrating Eq. 11-2 to obtain x, differentiating it to obtain $\ddot{x}$, and substituting these three (x, $\dot{x}$, and $\ddot{x}$) into Eq. 11-1, F_r is determined as

$$F_r = \left(a_1' W - kx_o + kv_o T_c\right) - kv_o t - \left(\frac{W}{g}\frac{v_o}{T_c} + kv_o T_c\right) e^{-t/T_c} \qquad (11\text{-}3)$$

This equation contains three terms: a constant term as expected, a time-dependent term that decreases to compensate for the increase in the spring force, and a transient term that is necessary to allow the weight to accelerate to the velocity v_o. The time-dependent force is typical of the forces produced in an unwinding clock. Hence, a clockwork escapement is applicable. Eq. 11-3 determines the design of the clockwork. With this force function it will produce the required arming delay.

At any other acceleration a_2' the time to arm will be different. By substituting F_r in Eq. 11-1 and using a new acceleration a_2', the time to move the distance S may be found by solving the transcendental equation

$$S = -\frac{W}{gk}\left(a_2' - a_1'\right)\cos\sqrt{\frac{gk}{W}}\,t + \frac{W}{gk}\left(a_2' - a_1'\right) + v_o t + v_o T_c \left(e^{-t/T_c} - 1\right) \qquad (11\text{-}4)$$

Since solutions of these equations are obtained by interpolation formulas, it is best to estimate slider weight and spring constants (note that W and k always occur as a ratio), then to calculate arming time and adjust as necessary.

In some fuze applications, the slider is made light and a separate weight is coupled to it with a spring so as to cushion the clockwork against shock loads. This additional spring changes the equation of motion for the mechanism.

An example of this type of mechanism is the Safing and Arming Device, GM, M30A1 shown in Fig. 11-2. This device is, of course, much more refined than the example cited. Some of the data for the above example were taken from this device.

11-4 GRENADE FUZES

11-4.1 HAND GRENADES

A hand grenade is a munition hurled against the enemy. Its function is explosive (blast or fragmentation) or chemical (irritant, incendiary, or smoke). Unlike projectiles that strike on their nose, the trajectories of hand grenades are unstable so that the direction of target impact cannot be set. They experience no unique forces that can be used for arming, none that are not also present during normal shipping and handling. For this reason, the requirements for out-of-line detonator safety and an independent arming force have been waived for all past grenade fuzes. While there are no present grenade fuzes having the detonator safety features, it is highly desirable that a practical detonator safety device be developed and incorporated into future designs. Grenades are treated more fully in a separate publication[3].

Fuze action is either time (4-5 sec) or impact. Impact action fuzes also contain a 1-2 sec arming

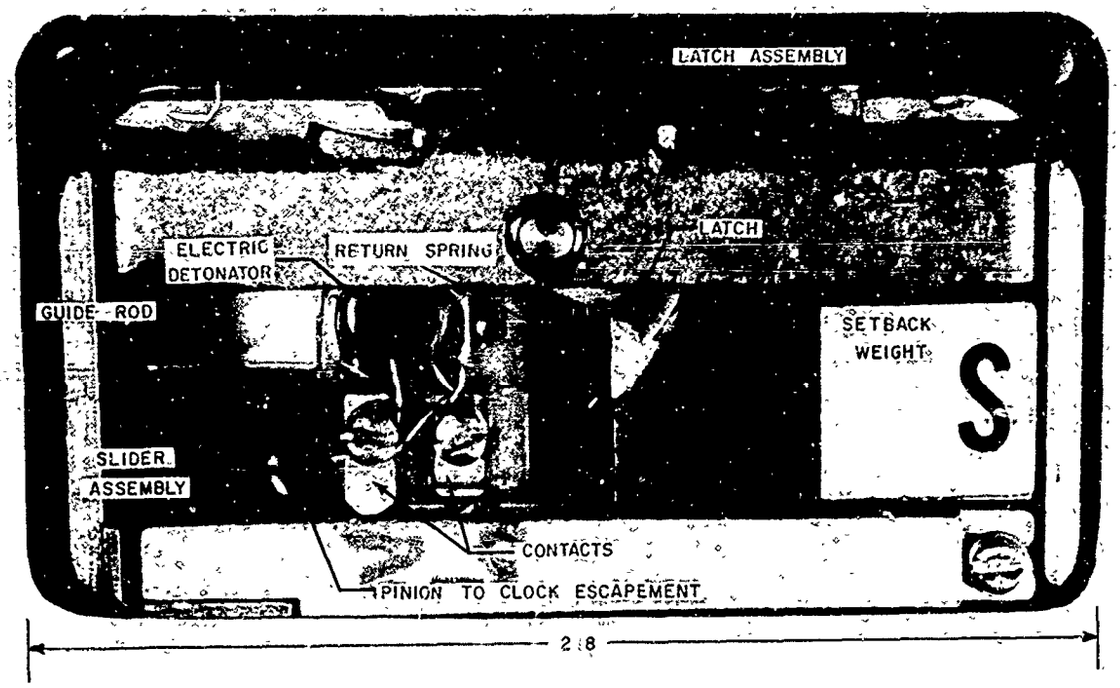

Figure 11-2. Safing and Arming Device, GM, M30A1

delay and a self-destruction feature that will explode the grenade in 4-5 sec. Since timing accuracy is not critical, a pyrotechnic element is the simplest and most widely used method to achieve delay. The explosive train consists of a percussion primer, an obturated delay element, and a flash detonator or blasting cap that will detonate the grenade. The detonator base charge may be omitted in chemical grenades where the main charge is merely ignited.

Since the grenade's orientation to the target at the time of functioning cannot be predicted, impact action is difficult to achieve by mechanical means. With an electric detonator, an omnidirectional switch will solve this problem. Two trembler switches (Fig. 7-1) at right angles to each other perform the desired action, but this arrangement is probably too bulky. The M217 Grenade Fuze (Fig. 11-3), for example, has an all-ways ball switch. Energy is provided by a thermal battery having an activation time of 0.5 sec. This interval plus that of a thermal arming switch, closing in 1.5 sec, provides the arming delay. A self-destruction switch closes in 4.5 sec.

Manual arming of grenade fuzes occurs in two steps: the operator pulls a safety pin (pull ring) and a safety latch (hand lever) is released when the grenade leaves the operator's hand. The trigger mechanism of hand grenades is similar to that of the firing device shown in Fig. 13-5. The M204A2 Hand Grenade Fuze is shown in Fig. 11-4[4]. An example is given in par. 13-4 in which the design features of the striker spring are discussed.

Let us design a typical hand grenade fuze using the firing device and other standard components with a functioning delay of 4 to 5 sec. The energy used to initiate the percussion primer is derived from the potential energy H_s stored in the spring and released when the striker swings

$$H_s = G\theta = \int_0^{\pi} k\theta\, r\, d\theta \qquad (11\text{-}5)$$

where G is the torque that is proportional to the deflection ($= k\theta$), and r is the radius arm of the striker that swings through π radians (180°). Since r is 0.5 in. and k is $28/\pi$ lb/rad

$$H_s = 7\pi \text{ lb-in.} = 352 \text{ in.-oz} \qquad (11\text{-}6)$$

If the device is 50% efficient because of friction, the energy available as the striker hits the

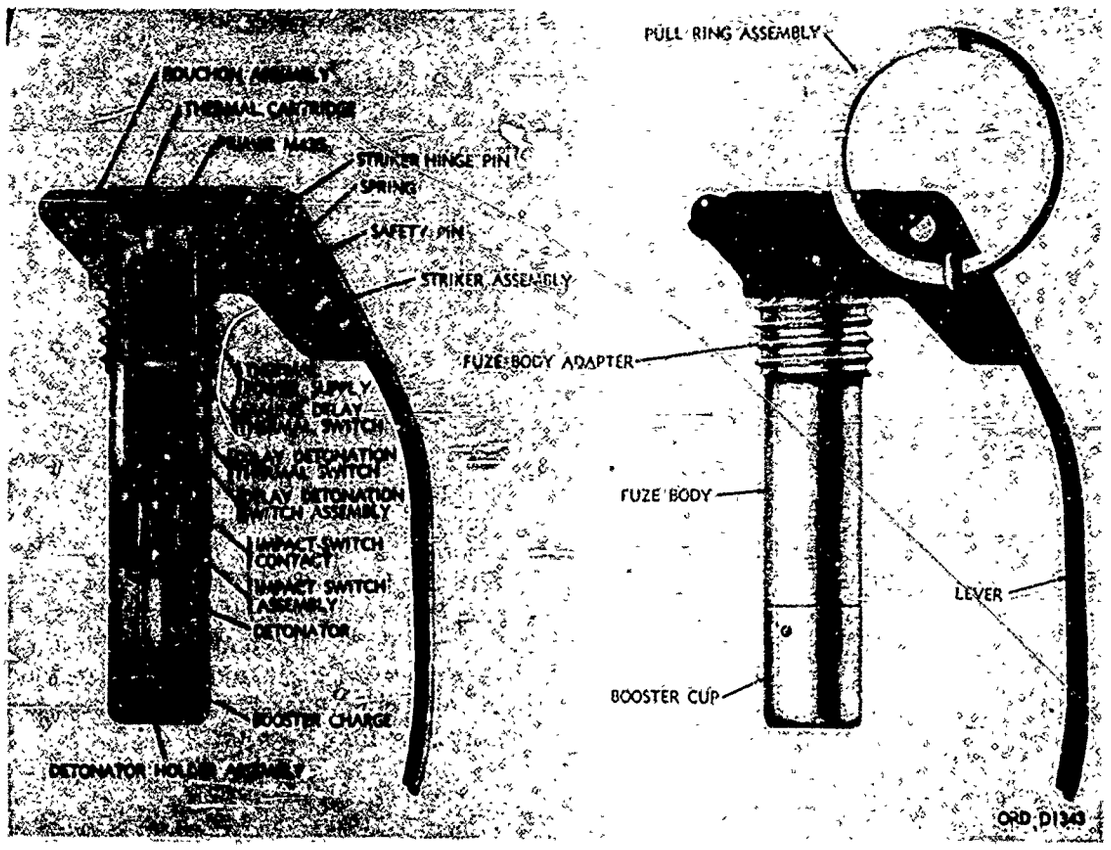

Figure 11-3. Hand Grenade Fuze, M217

percussion delay element is 176 in.-oz. The velocity of impact is important, too, but the specifications are not so easily set (see par. 3-3).

A suitable obturated, pyrotechnic delay is selected in regard to time, size, input sensitivity, and output. The output would be a flash that can ignite a standard flash detonator. A standard blasting cap will then be sufficient to initiate the bursting charge.

11-4.2 RIFLE GRENADES

It is recognized that the current standard service rifle is not designed to accommodate a rifle grenade. The inclusion of fuzing for a rifle grenade is for the record and to make the handbook complete. Rifle grenades are used by the infantry to hurl larger charges of explosives longer distances than can be thrown by hand. They are fired from a rifle by use of a grenade adapter. Unlike those for hand grenades, the fuzes of explosive rifle grenades must contain all of the required arming features. Fired at a velocity of about 150 fps, the grenades are subjected to setback accelerations of 500 to 1000 g, about midway between hand grenades and small mortar projectiles. This setback force in combination with an escapement timer can serve for arming safety. Grenades are treated more fully in a separate publication[3].

Rifle grenades are commonly used today for HEAT or chemical rounds. Chemical rounds (signal or smoke) are set off by a simple igniter. HEAT rounds require a base-detonating fuze (point-initiated) to make room for the shaped-charge cone in the nose. Mechanical fuzes (spitback or firing pin backed by a high-inertia mass) are no longer used in rifle grenades because of their low reliability and slow action. The best design is a piezoelectric nose element that initiates an electric base fuze (see par. 3-4.3.1).

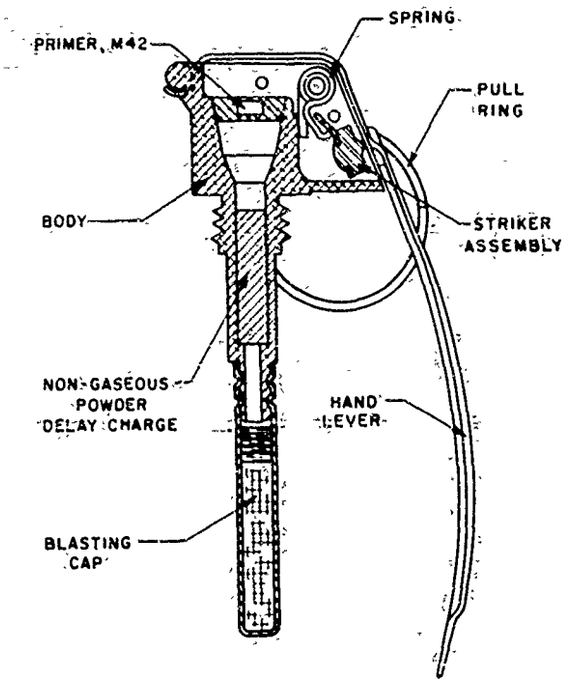

Figure 11-4. Hand Grenade Fuze, M204A2

11-4.3 LAUNCHED GRENADES

A grenade launcher has a function similar to that of a rifle grenade, namely to propel a grenade farther than it can be thrown by hand. Grenade launchers have a range of about 400 meters. The launcher differs from the rifle in that it also imparts spin to the grenade. Hence, both setback and spin can be used for arming in a grenade launcher.

Fuze, PD, M551 (Fig. 11-5) is used for grenades launched from the 40 mm XM79 Grenade Launcher. It functions by impact or graze and requires the following four actions to arm:

(1) The setback pin retracts from the rotor against its spring retainer due to setback, and the pin locks into the retainer at the 4 leaves, in the rear position.

(2) The hammerweights of the wagon-wheel centerplate assembly pivot outward against the hammerweight spring under centrifugal force allowing the firing pin and spring assembly to push forward on the push pin, thus disengaging the firing pin from the rotor.

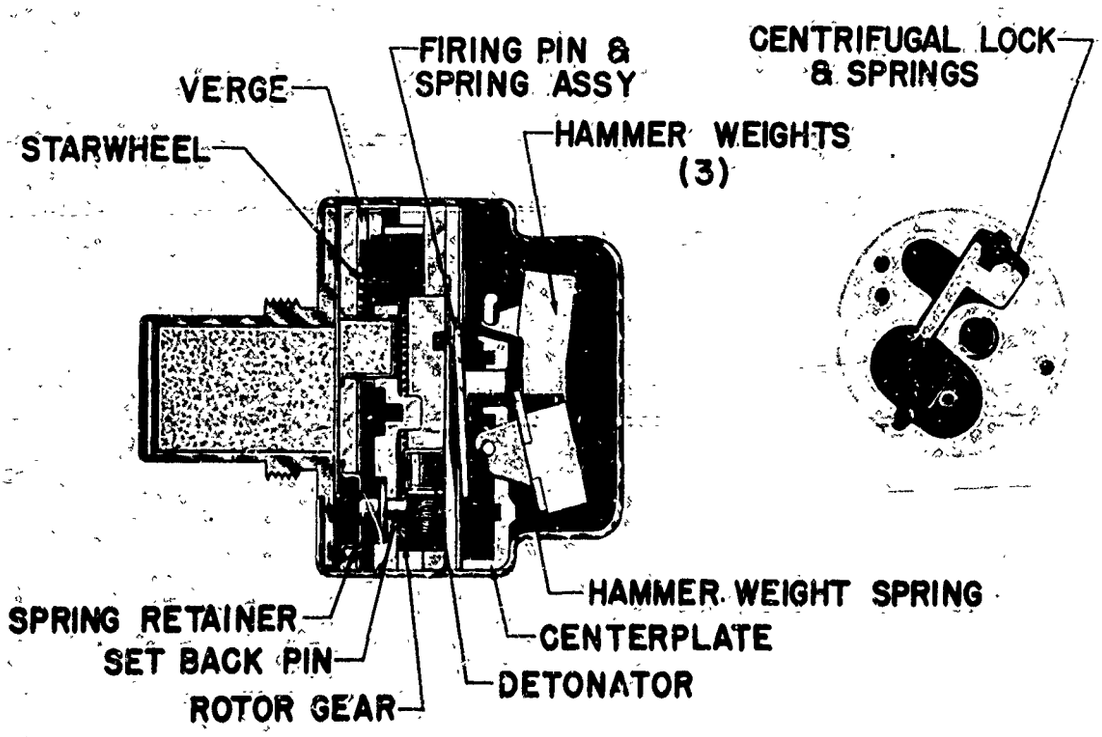

Figure 11-5. Grenade Fuze, PD, M551

(3) At 3000 to 6000 rpm the centrifugal force is sufficient to cause the centrifugal lock to compress its spring and unlock the starwheel, thus allowing the escapement to operate.

(4) The rotor spring rotates the rotor gear assembly (containing the detonator) into the armed position, but its movement is slowed down by the verge through the starwheel and pinion assembly. The verge oscillates with a regular beat governed by its weight and rotor spring torque, releasing one tooth of the starwheel on each oscillation. This action provides an arming time of 66 to 132 msec, corresponding to 60 to 120 ft in range of the temperature extremes.

Upon impact, the hammerweights pivot inward due to their inertia and strike the push pin which in turn strikes the firing pin. The firing pin initiates the M55 Detonator causing detonation in turn of the booster. On graze impact, one hammerweight provides sufficient energy to initiate the detonator.

REFERENCES

1. K. A. Van Oesdel, *Primary Factors That Affect the Design of Guided Missile Fuzing Systems*, Naval Ordnance Laboratory, NAVWEPS Report 5953, Corona, Calif., 6 July 1960.
2. *A Compendium of Mechanics Used in Missile Safety and Arming Devices (U)*, Part I, Journal Article 27.0 of the JANAF Fuze Committee, March 1962, AD-346 125 (Confidential).
3. AMCP 706-240 (C), Engineering Design Handbook, *Grenades (U)*.
4. TM 9-1330-200, *Grenades, Hand and Rifle*, Dept. of Army, June 1966.

CHAPTER 12
BOMB FUZES

12-1 GENERAL

A bomb fuze, like other munition fuzes, must arm at an appropriate time after release and function at or near the target. However, certain peculiarities arise from the following considerations:

(1) The bomb is dropped, rather than projected, usually from fast flying aircraft.

(2) Bomb fuzes do not experience setback forces.

(3) After release, the bomb follows the aircraft closely for a short time.

(4) A large risk to personnel and materiel is involved in the delivery of a bomb to a target.

(5) Two and sometimes three fuzes are warranted to increase the probability of functioning.

(6) If an electric power supply is used, it must be of a type that will operate at the low temperatures encountered at high altitudes.

(7) Bombs released in clusters may experience cross detonation, if prematurely set off.

These considerations account for some differences in fuze actions compared to artillery fuzes. In turn, the action affects impact, time, and special bomb fuzes. Additional information on bomb fuzes is contained in bomb manuals[1] and a catalog on air-launched weapons fuzing[2].

12-2 FUZE ACTION

Fig. 1-4 illustrates a typical general purpose bomb. Nose and tail fuzes are shown and the important parts are identified. A transverse or body fuze is not shown on the drawing because it is not used in this type of bomb. Attention is directed particularly to arming wire and arming vanes.

Bombs are commonly armed by a vane. Except for clusters, functioning action is the same as that for other fuzes.

12-2.1 THE ARMING PROCESS

When a bomb is carried in an aircraft, the fuze arming process is held in abeyance by one or more arming wires. One end of the wire is attached by a swivel loop to a pawl on the bomb rack. The other end is threaded through the arming vane so that it prevents the vane from rotating. When the bomb is released, the wire being attached to the bomb rack is withdrawn from the fuze, the vane is free to rotate in the air stream, and the arming process can begin. This feature gives the vane-actuated mechanism a definite advantage over a clockwork because the clockwork is only held inoperative by the arming wire. If it becomes necessary to jettison the bombs, the arming wire is not withdrawn from the fuze but is allowed to fall with the bomb.

While the arming process appears straightforward and is usually successful, certain difficulties may arise and steps must be taken to minimize their danger: the wire may break before the bomb is released so that the part remaining in the fuze will prevent its arming; the wire may not be securely attached to the bomb rack so that it falls with the bomb, and when the bomb is jettisoned, the wire may catch on the aircraft and be withdrawn unintentionally. On the other hand, air-integrating zero-g devices could be used that would operate when the bomb is in free fall. Such a device must be capable of differentiating between free fall of the bomb and free fall of the aircraft with bomb.

Fig. 12-1 shows the trajectories of a bomb after release from an aircraft in horizontal flight at various speeds. Parameters commonly used are indicated on this figure and are defined as follows:

(1) SVD:

Safe vertical drop, SVD, is the vertical distance below release altitude in which the fuze must be safe. The distance along the bomb trajectory to this point is called minimum safe air travel, or Min SAT. Hence, SVD is the vertical component of Min SAT. The arming zone is that part of the bomb trajectory in which the arming process is completed. Even for fuzes of the same type, the arming process is not complete at the same point in the trajectory. This spread is created by the existence of manufacturing tolerances and the variations of speed and altitude of the plane at the moment of release.

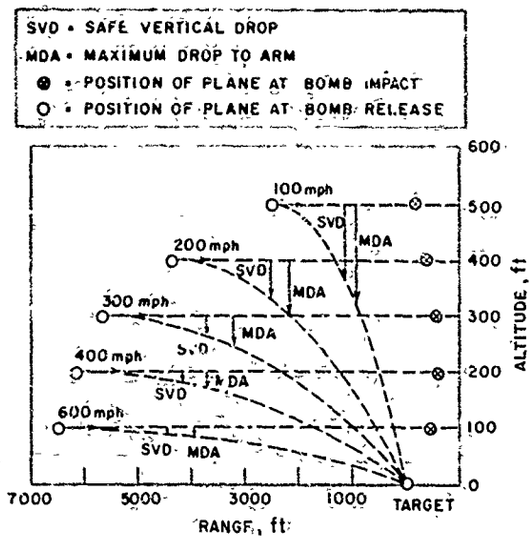

Figure 12-1. Bomb Trajectories

(2) MDA:

The maximum drop to arm, MDA, is the vertical distance below release altitude at which the fuze must be armed. The minimum release altitude, MRA, is a minimum altitude at which the bomb may be released and still have an armed fuze upon arrival at the target, it is the same distance as MDA.

An inherent disadvantage of basing arming delay directly on air travel is shown on Fig. 12-1. Bomb trajectory depends upon aircraft speed, the greater the speed the flatter the trajectory. Hence, arming measured by air travel does not provide consistent safety distances between bomb and plane. However, the vertical drop is a direct function of time, practically independent of plane speed. For this reason an arming delay system based on time instead of air travel is desirable. Such a system is readily obtained by attaching a constant speed governor to the fuze mechanism. Another method involves constructing the vanes with flexible blades so that they tend to rotate at a constant speed.

The trajectories shown in Fig. 12-1 present the simple case where bombs are dropped from an aircraft in horizontal flight. It is common, however, to forcibly eject bombs when the plane is in a dive. For this condition, the initial bomb velocity due to ejection—on the order of 5-10 fps—is another factor to be considered. Also, vertical drop time is now no longer independent of plane speed and trajectory. Fig. 12-2[5] displays an example of this complex situation where time of flight is a function of release angle, trajectory, and altitudes.

12-2.2 THE FUNCTIONING PROCESS

A bomb fuze functions like any other fuze. If it is desired to detonate the bomb in air, the parameter used may be time, barometric pressure, or target stimulus. (Proximity fuzes are the subject of other handbooks[6-7].) If a bomb is to be detonated at the moment it first contacts the target, this is accomplished either by means of a striker or by the inertia of some movable component. If penetration is desired, a delay feature is built into the fuze.

As in projectiles, the nose fuze in a bomb may be designed to function before, at, or after impact. A combination of nose and tail fuzes is often used to insure detonation of the bursting charge. For example, a typical combination consists of an impact nose fuze having mechanical time action and a nondelay tail fuze having impact inertia action. With this combination, the nose fuze is expected to function in the air after the expiration of a certain time interval. But if impact occurs before the interval expires, the firing pin will initiate the nose fuze. Further, if the nose fuze fails, the tail fuze will be initiated on impact. Nose and tail fuzes used to supplement each other in this way are known as companion fuzes. In the case of certain very large bombs, three fuzes of the same type are sometimes employed to insure initiation.

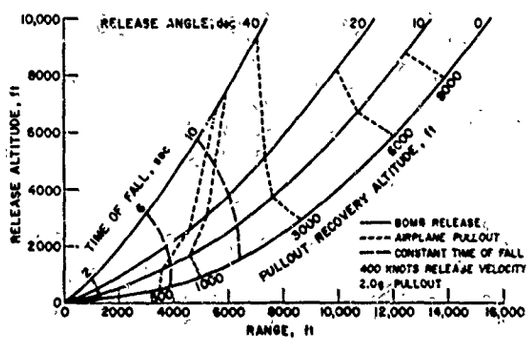

Figure 12-2. Typical Bomb Release Curves

12-2.3 CLUSTERING

Clustering accomplishes two purposes. First, it enables an aircraft to carry its full bomb load regardless of individual bomb size. For example, a certain plane is designed to carry two 1000-lb bombs. In order to carry the same weight of 100-lb bombs, these smaller bombs can be grouped into two clusters of 10 bombs each. Secondly, clustering also provides a convenient means of releasing bombs for area bombing in contrast to point bombing.

Cluster bombs are held together and suspended from the plane by means of a cluster adapter. The adapter may be designed to open immediately upon release from the plane or after a delay. Usually, a mechanical time fuze with its associated arming wire opens the adapter. Each bomb in the cluster is equipped with its own fuze, the arming of which may be started by withdrawal of an arming wire, by opening of a fuze vane lock, or by other means.

12-3 IMPACT FUZES

Impact fuze is a term used for bomb fuzes just as for other fuzes. The tactical purposes of bomb fuzes are depicted in Table 12-1. The general categories of detonation when approaching, when contacting, and after impacting the target are also typical of other items of ammunition.

Bombs do not strike the ground at 90° but always at a smaller angle depending upon release altitude and aircraft velocity. Table 12-2 gives approximate striking velocities and angles for two altitudes and several bombs. This table indicates that the fuzes must be initiated at an oblique impact.

12-3.1 SUPERQUICK OR SHORT DELAY FUZES

12-3.1.1 A Typical Fuze

Short delay fuzes are exemplified by Fuze, Bomb Nose, M904E2 (Fig. 12-3)[1,4]. Operation is described as follows:

Rotation of the vane (1) drives the governor drum and spindle assembly (2) directly. A governor spring (3) holds centrifugal weights in contact with this drum; design of spring and weights provides for a governing speed of approximately 1800 rpm. This motion translated through a gear reduction rotates the arming stop (4). Drive lugs of the arming stop rotate the striker body assembly (5) that in turn drives the striker pin and guide assembly (6). Arming delay is determined by the arc through which the striker body assembly must rotate before it indexes with the index stop (7). At this time, the striker body spring (8) forces the striker body assembly forward to make contact with the bottom plate on the arming stop. Immediately thereafter, a striker ball (9) is forced by spring action into the void above the striker pin.

At the same time, a longitudinal slot in the striker pin guide indexes with the rotor release plunger (10) allowing it to move forward by spring action. This frees the rotor assembly (11) to rotate by spring action bringing the detonator into line with the rest of the explosive train. A detent (12) locks the rotor in the armed position.

Subsequent impact on the nose of the fuze shears the lugs holding it in position allowing the entire nose assembly to move rearward. This motion forces the striker body assembly against the striker pin which in turn initiates the explosive train.

Various arming delay times are selected by depressing the index lock pin (13) and rotating the nose assembly as a unit. This establishes the arc through which the striker body assembly must rotate before it indexes with the index stop. A minimum arming setting of 2 seconds is provided by the index ring (14).

Superquick action and functioning delays of 0.010, 0.025, 0.050, 0.100, and 0.250 sec are selectable by inserting the proper Delay Element, M9, in the fuze cavity just aft of the striker pin. This is a pyrotechnic element, shown in Fig. 4-7, which contains Primer, M42, a pyrotechnic delay column, and an Element Relay, M6. The output of the element flashes into an additional lead azide relay and thence into the detonator.

12-3.1.2 Gear Trains

Gear trains are needed in bomb fuzes because the power source for the fuze is a high speed propeller. Normally, the propeller vanes turn at a high speed with a governor used for regulation. The rotation must be transferred to low speed arming shafts that actuate restraints on the arming mechanisms.

When designing a gear train for bomb fuzes,

TABLE 12-1. TACTICAL PURPOSES OF BOMB FUZES

Bomb Position Relative to Target at Detonation		*Characteristic Functioning Delay*	*Position of Fuze in Bomb*	*Possible Type of Fuze*
Approaching		(Airburst before contact)	Nose or Tail	Mechanical Time
			Nose	Proximity
First Contacting	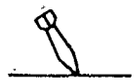	Minimum (instantaneous)	Nose	Impact—SQ (instantaneous)
			Tail	Impact inertia—nondelay
Penetrating, Bouncing, or Resting in Contact with	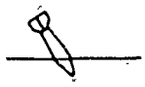	Short	Nose	Impact—short delay
			Tail	Impact inertia—short delay
	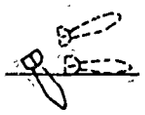	Medium	Tail	Impact inertia triggered—medium delay
	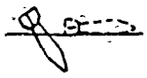	Long	Tail	"Impact" chemical or mechanical triggered long delay Plus antiwithdrawal

TABLE 12-2. BOMB BALLISTICS

All released from an aircraft at 400 miles/hour

Altitude		*10,000 Feet*		*25,000 Feet*	
Bomb No.	*Weight, lb*	*Striking Velocity, fps*	*Angle of Impact, °*	*Striking Velocity, fps*	*Angle of Impact, °*
AN-M30	100	750	61	850	72
AN-M57	250	800	59	975	72
AN-M64	500	850	55	1050	69
AN-M65	1000	850	55	1050	64
AN-M66	2000	875	55	1050	68
AN-M56	4000	850	57	1050	69

the following factors are important: gear ratio of the train, torque output desired, space allotted, friction losses, manufacturing costs, and materials to be employed.

The gear ratio is usually large, about 1000 to 1, so that multiple pairs of spur gears are indicated. Since there cannot be less than six teeth on pinion gears for efficient operation, an upper

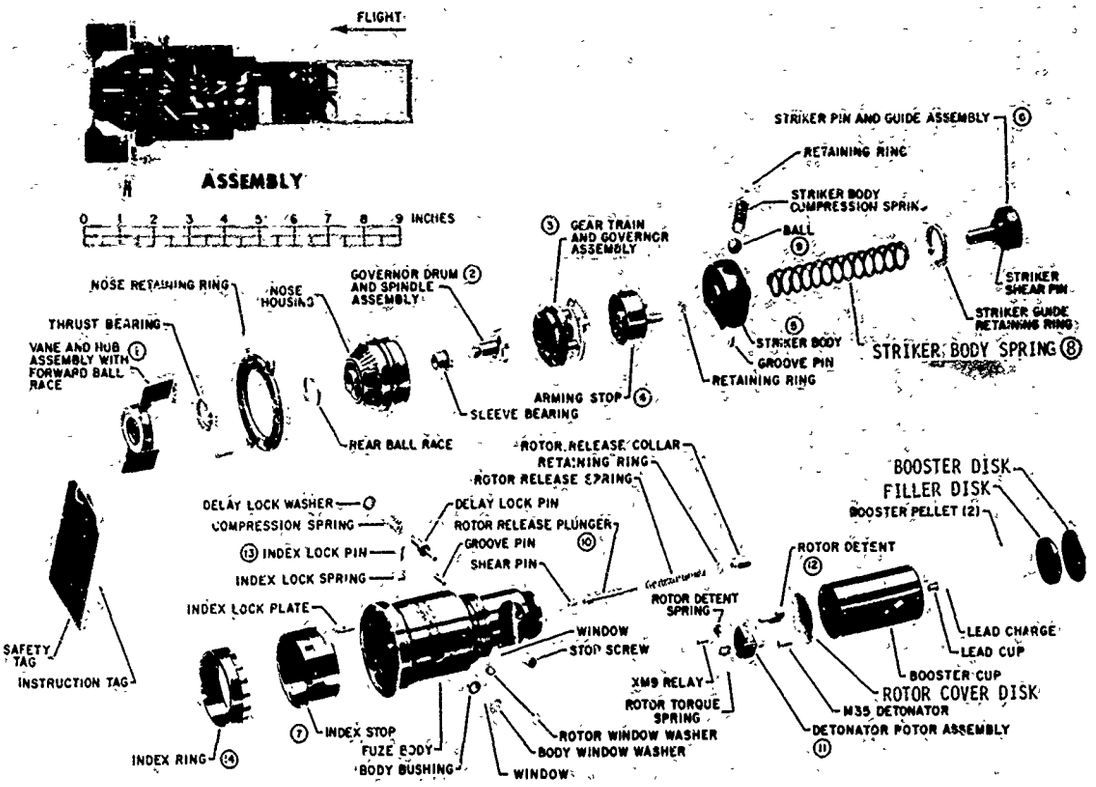

Figure 12-3. Fuze, Bomb Nose, M904E2

limit is placed upon the gear ratio. Space may be saved with internal gears, but they are more expensive and require more complex mountings than spur gear trains. Hence, their use should be limited. A main shaft and a countershaft can be arranged with identical pairs of gears and pinions.

The spur gears are designed with these criteria: (1) metal gears satisfy the 20-year shelf life requirements better than plastic or fiber gears; (2) stampings are satisfactory for gears because their life span is short; (3) involute tooth contours are considered better than cycloidal tooth contours by some designers, however, the relative virtues are still unresolved. Gears of standard pitch eliminate production bottlenecks for the manufacturer. In general, many of the design considerations are similar to those used for clockworks discussed in par. 6-6.

The M904E2 Fuze contains a gear box between governor and arming stop assembly (see Fig. 12-4)[1,4]. The first gear speed is limited to 1800 rpm. A 240° rotation of the last gear is desired for a maximum arming delay of nearly 18 seconds. These data require a gear ratio on the order of 1000:1. The use of integral gear ratios of 3,3,3,3,3,4 produces an overall ratio of 972:1. Five identical pairs and a last internal gear can be fitted into the two-inch cavity. For a gear ratio of 3:1 the spur gear can be ¾ inch and the pinion ¼ inch. A safe value for the face width of the gears can be computed from the Lewis formula which assumes that the load F_g is spread evenly across the tooth face

$$F_g = \frac{\pi \sigma_n b F_f}{S_f p_d}, \text{ lb} \qquad (12\text{-}1)$$

where σ_n is the allowable normal stress, psi; S_f is a safety factor (say 3); b is the tooth face width, in.; p_d is the diametral pitch, in.; and F_f is the form factor for the tooth (approximately 0.1). For brass, σ_n is about 25,000 psi so that with F_g = 3 lb, the face width will then be 0.055 in. Usually the pinions have a wider face (150%) than the spur gears to prevent the teeth from becoming malaligned axially.

12-3.1.3 The Explosive Train

The explosive train of a bomb fuze is designed to convert the target impact forces or the results

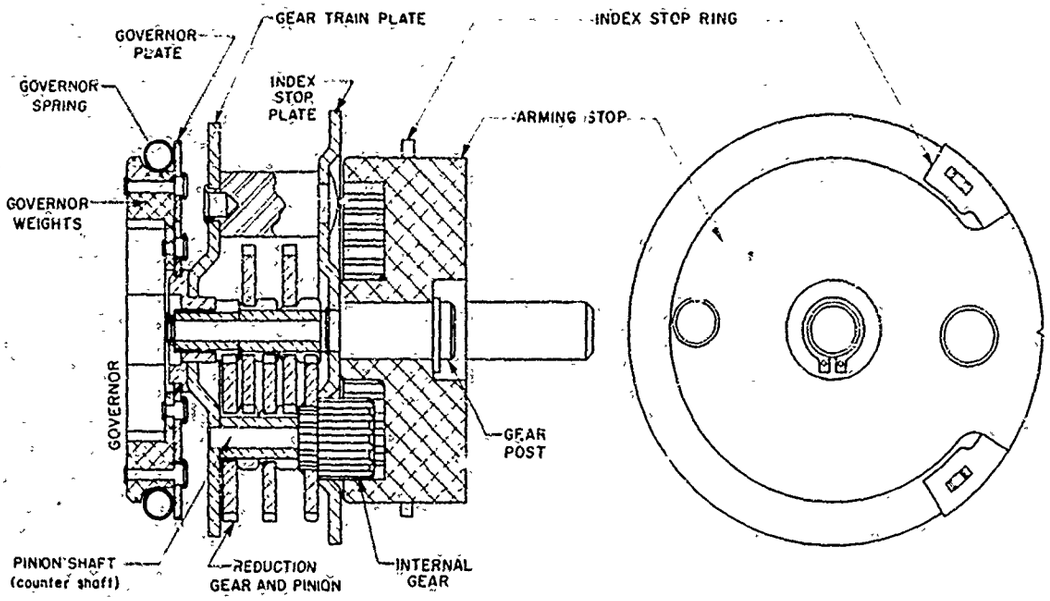

Figure 12-4. Gear Assembly of Fuze, M904E2

of target influence into a detonation that will initiate the bursting charge of the bomb. This is the same action that is required for any other fuze explosive train. Specifications for bomb fuzes commonly require that a functioning delay be incorporated into the explosive train. One bomb may be used against many different targets and its effectiveness against each target often depends upon the functioning delay. It is convenient to provide plug-in delay elements to make the fuzes more versatile.

Delay is usually achieved by pyrotechnic means. A primer is needed to initiate the delay element because it requires input energy in the form of flash or flame. Further, since deflagration of the delay element does not produce a flash that will initiate a detonator, a relay is needed to amplify the output of the delay element. Of course, the detonator is required to produce a detonation wave. A booster is necessary to enlarge the detonation wave for reliable initiation of the high explosive bursting charge. Further, a lead is useful to guide the detonation wave into the booster. These components (firing pin, primer, delay, relay, detonator, lead, and booster) form the explosive train.

A designer might start his work at the output end of the train. The size of the booster charge is determined from empirical data. For the M904E2 Fuze, 1100 grains of tetryl pressed at 10,000 psi will be sufficient if used as a cylinder with a length to diameter ratio of 3:2. This makes the cylinder 2 in. long (density of tetryl is 0.056 lb/in.^{3}). It is usually convenient to make up the booster charge of two or three pellets. The cup may be made of aluminum because it is easy to form, is readily available, is light, will protect the tetryl against effects of rough handling, and is compatible with tetryl (see Table 4-2).

The initiating input requirement for tetryl is a detonation wave that is provided by a detonator. A detonator is sensitive to shock and heat, so for safety, it must be placed out of line with the booster. Thus it will be held in a movable part and shielded from the booster charge until the fuze is armed. A large thick plate is used to separate them, as shown on Fig. 12-5[1,4]. When the detonator swings into alignment, there will be a large gap (the thickness of the shield, 0.30 in.) between it and the booster. While possible in some designs, it cannot be assumed that the output wave from the detonator will carry across this gap and reliably initiate the booster charge. Hence, a tetryl lead (same explosive as booster charge) is added to eliminate part of the gap.

It is necessary to center the lead over the booster face. Approximately 1.5 grains of tetryl with a specific gravity of 1.45 to 1.60 encased in an aluminum cup is sufficient. A slight gap between detonator and lead is desirable in order to

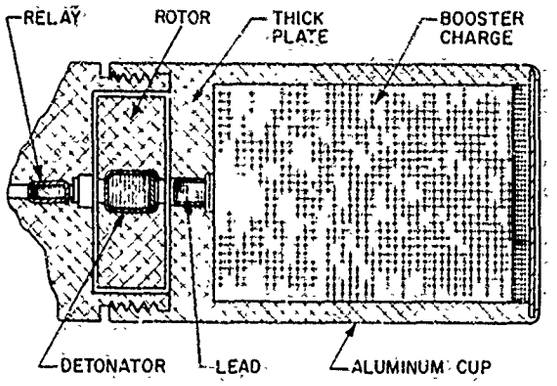

Figure 12-5. Explosive Train of Fuze, M904E2

raise the reliability of lead initiation (see par. 4-2). A gap of as much as 0.060 in. will suit this case as a first trial. Tests will dictate any change.

The detonator must be sensitive and initiated by flash; hence, it will contain an igniting mixture, a primary explosive, and an explosive similar to that in the lead. For the detonator to fit into the arming rotor, it cannot be over 0.4 in. long. It should have a length to diameter ratio of about 3:2 for proper propagation of the detonation wave (see par. 4-4.4.2). The M35 Detonator meets these requirements. The aluminum cup is 0.370 in. long by 0.241 in. diameter. It has a base charge of 200 mg tetryl, and a primary charge of 266 mg lead azide.

It is convenient to have the plug-in delay element contain primer, pyrotechnic delay column, and relay. Delay Element, M9 is such a unit (Fig. 4-7). Actually, it is six different units, depending on the delay (nondelay, 0.010, 0.025, 0.050, 0.100, and 0.250 sec). The primer is a standard Percussion Primer, M42, and the relay element a lead azide relay similar to the M6. Zirconium/barium chromate delay composition is used for the delay, added between primer and relay to make up the component which is stamped and coded as to delay for easy identification. A locking pin is added to the fuze to orient this component in the proper position in order to minimize the possibility of the fuze being inserted into the bomb without this part.

On target impact, the frangible nose of the fuze is crushed so that the striker body is driven rearward forcing the striker pin into the primer. For this percussion primer, the firing pin has a hemispherical point to fit the anvil of the primer (see par. 3-3.1). It should be made of steel to resist bending or compression during target penetration. A shear wire is used to hold the pin in place prior to target impact.

12-3.2 DELAY FUZES

Delay fuzes are made so that pyrotechnic delays may be inserted in the explosive train as desired. They are usually in the tail or midsection of the bomb for protection during impact. Fig. 12-6 illustrates Fuze, Bomb Tail, M906[1,4]. The operation is described in the paragraphs which follow.

12-3.2.1 Fuze Operation

A drive assembly acting through a flexible shaft rotates pinion and extension assembly (1) at a constant speed of approximately 1800 rpm. This motion drives the plunger release screw (2) directly, which withdraws from the plunger assembly (3) freeing it to move longitudinally upon sufficient deceleration of the fuze. A creep spring (4) prevents the plunger from moving because of velocity changes of the bomb during free fall.

As the plunger release screw rotates, the rotor release screw assembly (5), being keyed to it, withdraws from the rotor cavity allowing the rotor (6) to move by spring action thus bringing the detonator into line with the rest of the explosive train. This occurs approximately 0.4 sec before release of the plunger. A detent (7) locks the rotor in the armed position.

Impact then causes the plunger assembly to move forward until an annular groove in it indexes with a steel ball (8). The spring-loaded firing pin (9) then forces the ball into the groove and is thus freed to be propelled into the primer.

This particular fuze has a desirable safety feature. An inspection window (10) judiciously placed serves to indicate whether the fuze is safe or armed. The flexible drive shaft drives the spindle from which the plunger release screw is turned. As the plunger release turns, the gear moves away from the window.

A Delay Element, T6, loaded to give either 4-5 sec or 11-14 sec functioning delay, is inserted into the fuze cavity just forward of the firing pin. This delay element contains a primer, a pyrotechnic delay column, and a lead azide relay charge. The output of this delay element flashes into an additional relay and thence into the detonator.

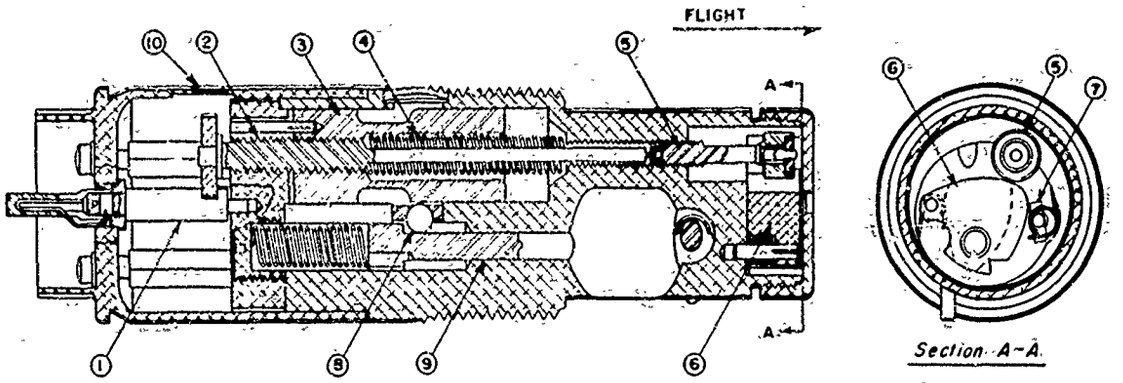

1 — PINION AND EXTENSION ASSEMBLY	6 — ROTOR
2 — PLUNGER RELEASE SCREW	7 — DETENT
3 — PLUNGER ASSEMBLY	8 — STEEL BALL
4 — CREEP SPRING	9 — FIRING PIN
5 — ROTOR RELEASE SCREW ASSEMBLY	10 — INSPECTION WINDOW

Figure 12-6. Fuze, Bomb Tail, M906

This unit is similar to Delay Element, M9, shown in Fig. 4-7.

12-3.2.2 Drive Assembly

The fuze arming mechanism is driven through a flexible shaft by Drive Assembly, M44, in the tail fin of the bomb. Since the fuze can be used on many sizes of bombs, this arrangement allows drive and fuze to be separated different distances as required by various tail fin assemblies. Three different lengths of flexible shafts cover the necessary range of bomb sizes.

The governor is the same as that in Fuze, M904E2, Figs. 12-3 and 12-4. A close-up of the governor is shown in Fig. 12-7. Vanes spin the internal drum which engages one-piece die-cast aluminum weights. At the proper speed (1800 rpm) the weights disengage from the drum under the influence of the centrifugal field, thereby preventing further increase of output shaft speed.

The governor spring is made strong enough to hold the weights in contact with the internal drum at the desired speed. Note that the centrifugal force upon the parts increases as they move radially outward. The equation of motion for these parts at a constant spin velocity ω is (see par. 6-2 for terms)

$$m\ddot{r} = (m\omega^2 - k)\, r \qquad (12\text{-}2)$$

where r is the radius to the centrifugal weights. To release the rotor, $\ddot{r}$ must be positive so that $m\omega^2 > k$. For the drum to grab the rotor, $\ddot{r}$ must be negative or $k > m\omega^2$. Therefore, the grab speed is less than the release speed. Thus the grab speed is the proper one to use in designing the governor.

The spring will stretch because it is in the centrifugal field. Hence, this factor must also be considered in designing the spring. The assembly is broken down into parts, their masses determined, and the centrifugal forces calculated, to determine the initial spring tension. The spring is designed as discussed in pars. 10-2.1 and 10-3.1.

12-4 TIME FUZES

Time fuzes may be used to function bombs in

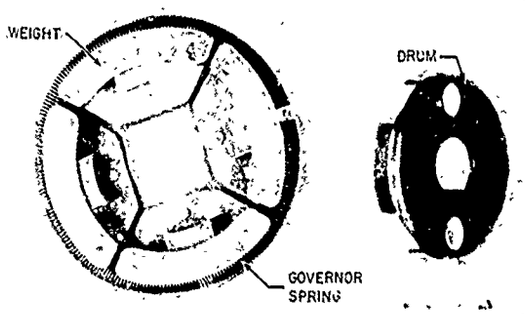

Figure 12-7. Constant Speed Governor of Drive, M44

the air. An explosion above the ground creates an area of greatest lethality for ground troops and for soft surface targets. The newest fuzes use timing devices for both arming and functioning processes.

12-4.1 OPERATION

Fig. 12-8[1] illustrates Fuze, Bomb Nose, M198, that contains a timer for both arming and firing processes. The parts operate as follows: Upon release from the aircraft and consequent withdrawal of arming wire, the arming pin (1) is ejected allowing the firing pin (2) to move forward out of the slider cavity. This motion permits the T5 movement assembly to start. Simultaneously, the vane (3) is freed to rotate. Then

(a) ARMING IS ACCOMPLISHED AS FOLLOWS: Rotation of the vane drives the governor drum (4) directly. A governor spring (5) holds centrifugal weights in contact with this drum; design of the spring and weights provides for a governing speed of approximately 1950 rpm. This motion translated through a gear reduction (6) drives the arming gear (7). The arming delay is determined by the arc through which this gear

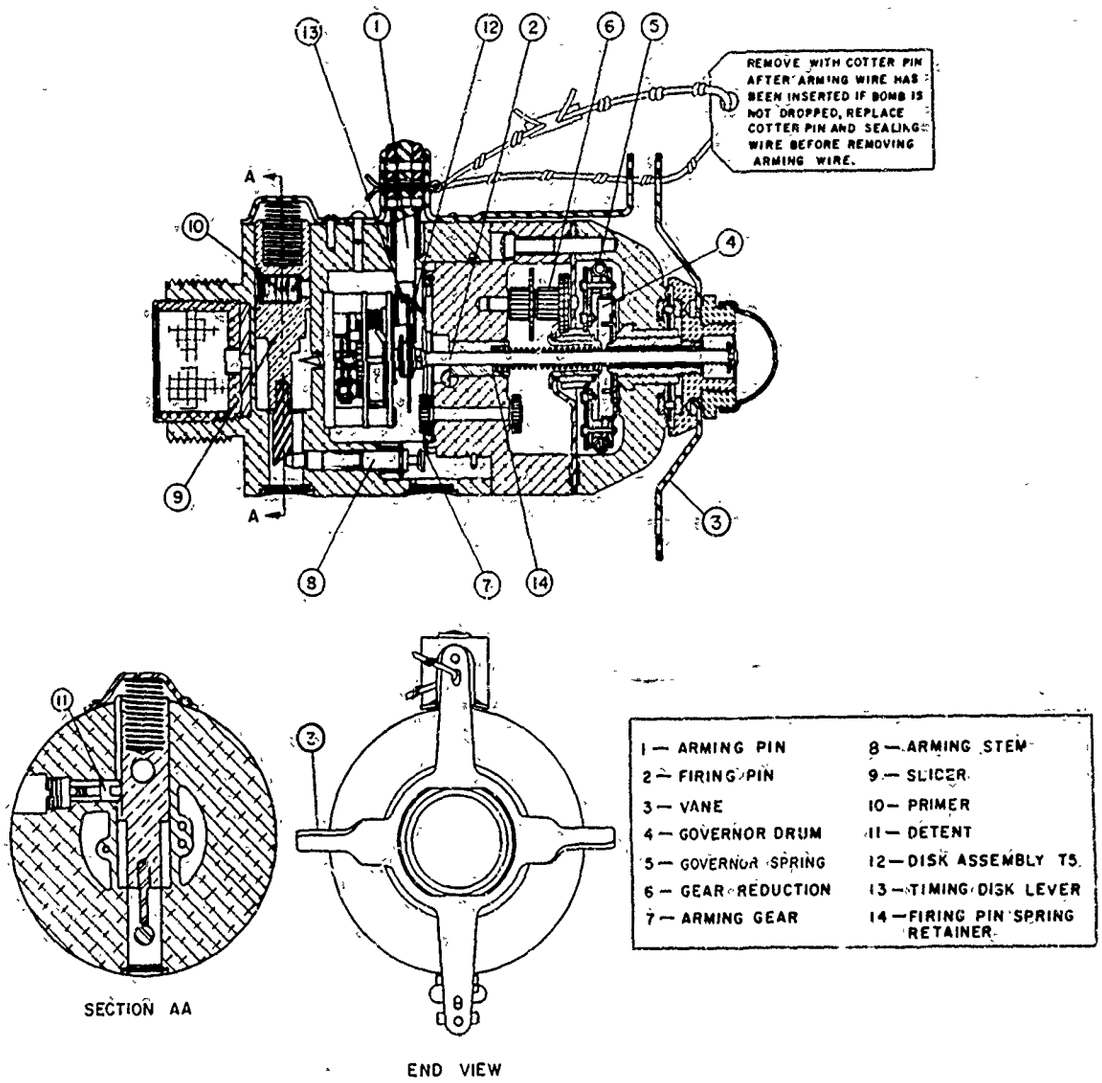

Figure 12-8. Fuze, Bomb Nose, M198

must rotate to index a notch in it with the arming stem (8). The stem then moves forward and allows the slider (9) to move by spring action bringing the primer (10) into line with the firing pin and the rest of the explosive train. A spring loaded detent (11) then drops into a hole in the slider and holds it in the armed position.

(b) FUNCTIONING IS ACCOMPLISHED AS FOLLOWS: Ejection of the arming pin removes a projection on it from a slot in the Disk Assembly, T5 (12) allowing the movement to start. Starting is assured by a spring-loaded member (not shown) which sweeps across the escape wheel imparting motion to it. The timing disk lever (13) rids the periphery of the disk assembly until the notch in the disk from which the arming pin was ejected indexes with the lever. The spring-loaded lever then drops into the slot releasing a system of levers which in turn releases the spring-loaded retainer firing pin spring (4). This retainer then drives the firing pin into the primer firing the fuze. The functioning delay is determined by the arc through which the Disk Assembly, T5 must rotate before the system of levers is actuated.

The functioning delay may be set in 0.5 sec intervals between 4 and 91 sec. This is accomplished by rotating the head and bearing housing assembly relative to the body assembly. The arming delay is automatically set at about half the functioning delay.

12-4.2 THE ARMING PIN

The arming pin must be removed before the disk assembly can turn. Fig. 12-9 shows the details of the arming pin assembly. The arming pin is held by a cotter pin during shipment and installation in the bomb rack. The initial spring load on the cotter pin can be calculated from the equation for a helical spring given in Table 6-1 and by using Fig. 12-9; it is found to be 3.53 lb. The shear stress on the pin is then 580 psi which is well within normal limits.

Computation of time to arm is based on Eq. 6-3 without friction or on Eq. 6-6 with friction. If one assumes negligible friction, the minimum time t for the arming pin to move a distance S is then obtained (see pars. 6-2.2.2 and 6-2.2.3 for terms)

$$t \doteq \sqrt{\frac{m}{k}} \cos^{-1} \frac{x_o - S}{x_o} \qquad (12\text{-}3)$$

The mass, 6.34×10^{-4} slug, is calculated from volume and density; the spring constant, 6.43 in.-lb, is obtained from Table 6-1; and by letting S be 0.55 in., one-half the maximum travel (the same as x_o), the time is found to be 4.5 msec. This short time may be neglected. Even with a friction force of 1 lb, the time is only extended to 6 msec. For all practical purposes then, the time to eject the arming pin may be neglected in computing the arming delay.

12-4.3 THE PROPELLER

The propeller has two vanes which act like the blades of a windmill as shown on Fig. 12-8. They

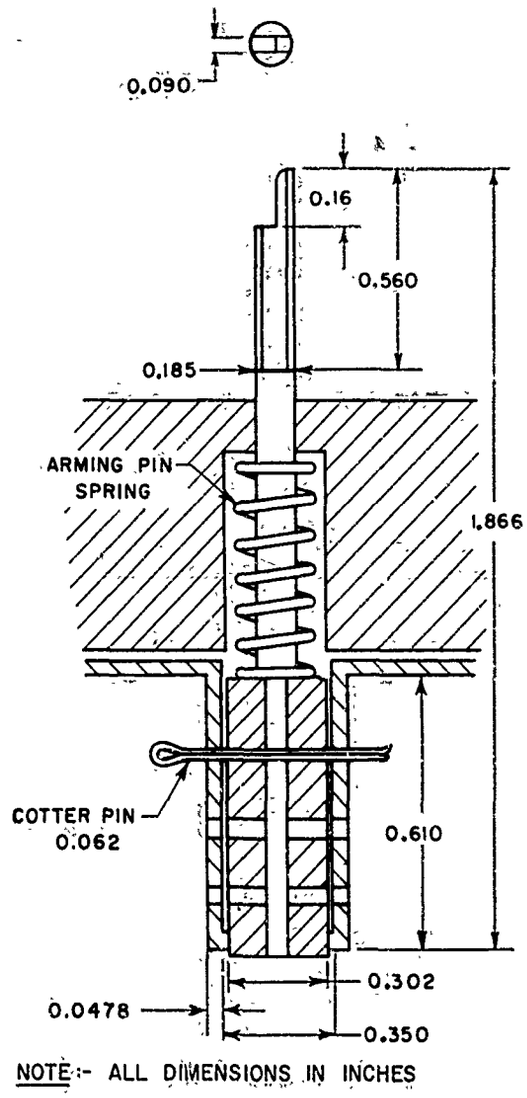

Figure 12-9. Arming Pin Assembly of Fuze, M198

spin in the air stream at a high rate to turn the governor drum which then regulates the rotation of the first shaft of the gear reduction train.

The power output of the vanes depends upon their efficiency in assimilating the energy of the air stream. If the vanes are treated like sails, an expression for the power developed H_p, ft-lb/sec, is

$$H_p = \frac{R\omega}{2g} A \rho_a (v_i^2 - v_o^2) \sin\theta \cos\theta \qquad (12\text{-}4)$$

where R is the mean radius of the vane, in.; A is the area, in.^{2}; ρ_a is the air density, lb/ft^3; v_i is the velocity behind the blade, fps; v_o is the velocity in front of the blade, fps; and θ is the angle of attack of the vane, deg. This equation requires empirical validation because the velocity of the air stream near the vane is now known. If we assume a vane angle θ of 20°, the air near the vane moving at 42 mph (61.6 fps), an increase in air speed after passing through the vane by 10% to 67.76 fps, ω 160 π rad/sec, an area of 0.04 in.^{2}, and a radius of 1.2 in., the power generated will be 10.5 watt. The density of air ρ_a is assumed to be 0.08072 lb/ft^3. Thus the power generated is slightly more than that consumed by an electric clock.

12-5 SPECIAL FUZES

A number of special fuzes are used in bombs that cover various tactical uses, e.g., bomb clusters, depth bombs, and fragmentation bombs.

12-5.1 BOMB CLUSTERS

Bomb clusters are used to drop several bombs at one time with one bomb sighting. Usually, several small bombs are enclosed in a single casing. An explosive device disrupts the casing and separates the bombs before they strike the ground. Hence, a fuze is needed to operate the explosive device. Since this fuze functions fairly close to the aircraft, low explosives, such as black powder or nitrocellulose, are specified with initiators similar to cartridge primers. Of course, each bomb has its own fuze that must not be initiated by the cluster fuze.

If the bombs are too large to be enclosed in one casing, they may be packed in a bundle that separates upon release from the aircraft. In this instance, a safety device such as an arming wire is needed for each bomb. The usual practice is to employ an octopus-type device in which the arming wires from the separate bombs are connected to one pawl on the bomb rack.

12-5.2 DEPTH BOMBS

Depth bombs are dropped from aircraft and are expected to explode after sinking to a certain depth. Fuze actions then follow this sequence: the fuze arms during its free fall, water impact does not affect the fuze, and the fuze functions by the increased water pressure present at the required depth. Of the many features necessary, only the method for preventing water impact from affecting the fuze will be discussed. Let Fuze, Bomb Tail, AN MARK 230 (Fig. 12-10) serve as an example.

This fuze is armed in the air before it hits the water. The arming process releases detents (5) that free the depth spring (9). Upon water surface impact, the firing plunger (7) tends to move forward into the firing pin (6) but the inertia counterbalance (8) restrains it. An approximate setback force may be calculated from Eq. 5-10 from the drag force on the bomb because the drag *coefficient* for the bomb in water is the same as that for the bomb in air[5].

While bomb velocity varies with drop height, velocity reaches a constant value eventually when the drag force in air just equals the bomb weight. This steady velocity, attained during free fall, is also the water entry velocity. Eq. 5-3 is then used to determine K_D (see par. 5-3.1.1 for terms)

$$K_D = \frac{Wg}{12 \rho_a d^2 v^2} \qquad (12\text{-}5)$$

from which the force on the part of weight is from Eq. 5-10

$$F = \frac{\rho_w}{\rho_a} W_p = 775\ W_p \qquad (12\text{-}6)$$

when the densities of water ρ_w and air ρ_a at 20° C are substituted in Eq. 12-6.

The counterbalance weights (8) are effective because they create a larger moment than the firing plunger (7) at the pivot pin (3). Eq. 12-6 is used to calculate the forces from which the stress in the pivot is found (see par. 6-4.2).

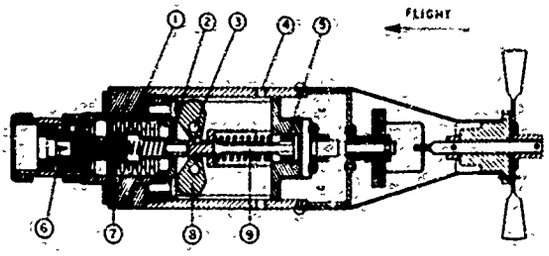

Figure 12-10. Fuze, Bomb Tail, AN MARK 230

Water seeps through the water ports (4) and (2) into the bellows (1). When the water pressure exceeds the pressure outside the bellows, the expansion moves the firing plunger. Bellows are manufactured with specified pressure-motion ratios.

12-5.3 FRAGMENTATION BOMBS

Fragmentation bombs contain fuzes that may be initiated either after a preset time interval or upon target influence[6]. The proximity fuze illustrates the latter initiation features. Proximity fuzes detonate the missile upon its *approach* to a target (a direct hit is not required). In many instances, explosion before actual contact is the condition in which maximum damage is inflicted.

The concept of operation of proximity fuzes is offered merely as an introduction to the subject of proximity fuzes. These fuzes are treated in detail in other publications[p-t].

Since proximity fuzes detonate as they approach the target, they are ideal for bombs intended to be exploded as *air bursts*. Air bursts have advantages over ground bursts because fragments of an exploded bomb and dispersed chemicals travel in relatively straight lines. A ditch or slight hill offers a high degree of protection from ground bursts to soldier or truck. If the bomb explodes in the air, fragments or chemicals will be hurled into foxholes or over barriers so that the shielding effect is greatly reduced. The height at which an air burst produces its maximum damage is rather critical. It must be high enough to expose the proper target area but not so high that the target is beyond the lethal range of fragments or the optimum range of chemicals.

The operation of proximity fuzes requires the following components: radio transmitter and receiver, selective amplifier, electronic switch, electric detonator, electric power supply, and safing and arming device.

For bombs, the radio must be built so that it is relatively insensitive to vibrations produced by the buffeting of the air stream. The radio signals should be concentrated in front of the bomb so that the ground will reflect the waves strongly. A dipole antenna with a reflector has a lobe-shaped radiation pattern as shown in Fig. 12-11. The wide lobe indicates that the sensitivity is about the same for all angles of impact near the vertical. Common angles of ground impact for bombs dropped from various heights vary from 55° to 72° as shown in Table 12-2.

The proximity fuze is initiated by circumstances explained by the Doppler principle: If there is relative motion between source and receiver, the received waves will differ in frequency from the transmitted waves. Fig. 12-12 shows the condition in which the receiver gets waves reflected from the ground just as though an image source beneath the ground were sending them. Since this image is equidistant from ground level with the source, it moves toward the ground surface at the same velocity as the bomb falls. The received frequency f_r is

$$f_r = f_t \left(\frac{c_L + v_L}{c_L - v_s} \right), \text{ cycle/sec} \qquad (12\text{-}7)$$

in which c_L is the velocity of the radio waves, f_t is the frequency transmitted, and $v_L = v_s$ the vertical velocities of receiver and source. Since the bomb velocity $v_s \ll c_L$, the expression for f_r can be approximated by

$$f_r = f_t \left(1 + \frac{2 v_s}{c_L} \right) \qquad (12\text{-}8)$$

and the difference in frequencies becomes $2 v_s f_t / c_L$.

The receiver compares the two signals (the reflected and a portion of the transmitted) by amplifying the beat frequency note $(2 v_s f_t / c_L)$ produced by the two signals. The amplitude of this note depends upon the amplitude of the reflected signal which is a function of target range. In this way, fuze initiation is controlled by bomb-target distance.

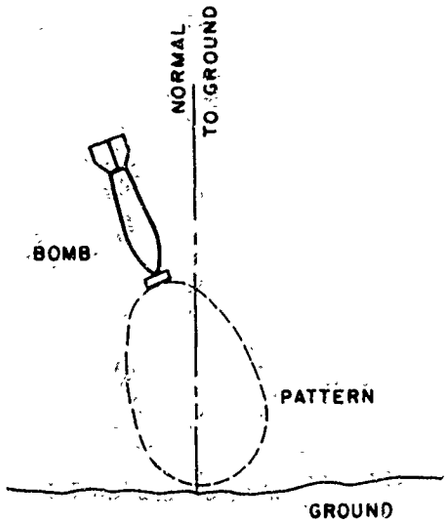

Figure 12-11. Antenna Pattern of Bomb Proximity Fuze

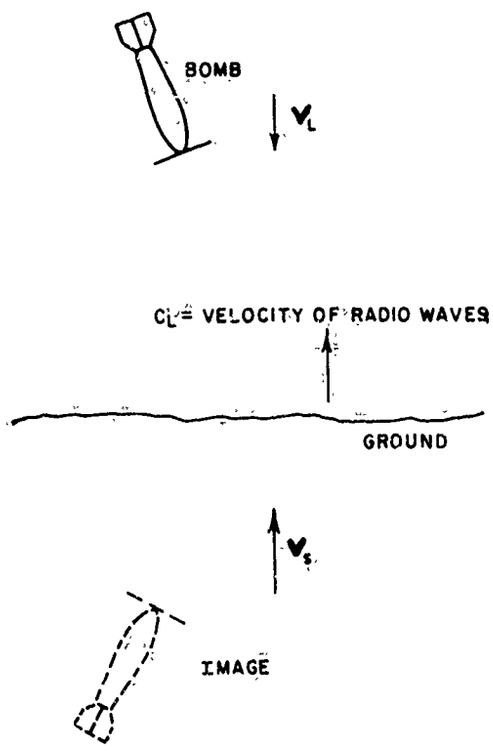

Figure 12-12. Doppler Principle

Bomb velocity varies with drop height as shown in Table 12-2, which means that the frequency of the received signal will vary and hence the beat frequency will vary. But the designer wants the fuze to be initiated at a certain height above ground regardless of bomb release altitude. Therefore, he must design the amplifier to have a constant gain throughout the possible range of beat frequencies. A response curve shaped as shown in Fig. 12-13 will suffice.

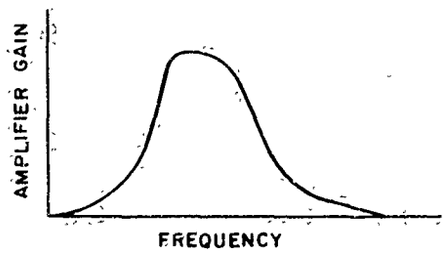

Figure 12-13. Typical Amplifier Response Curve

12-5.4 BOMBLET FUZES

As mentioned in par. 12-5.1, bomb clusters are made up of several bombs or bomblets, each bomblet being fuzed individually. Bomblet fuzes are designed in the same manner as bomb fuzes; the intended application dictates the functioning action. An example of a bomblet is shown in Fig. 12-14. It is the antitank Bomb, BLU 7/B, equipped with a mechanical impact fuze.

Fuze action is as follows: When the bomblet is ejected from its dispenser, the fuze safety clip (1) is withdrawn. The air stream tears off the retaining clip (2) that permits the retaining strap (3) and airchute (parachute) protector (4) to fall off. This action permits the ribbon airchute—folded within the protector—to open up and function. Functioning of the airchute yanks out the cap (5) approximately ¼ inch. The firing pin, attached to the cap by a spring pin, also moves with the

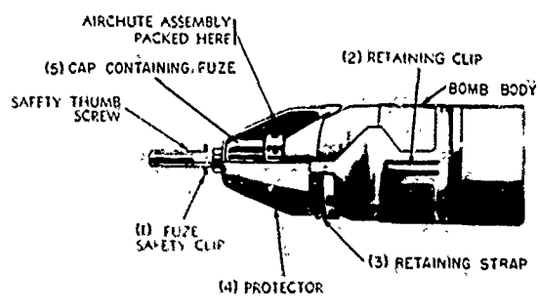

Figure 12-14. Bomb, BLU 7/B

cap. Withdrawal of the firing pin from its position against the side of the rotor permits the spring-loaded rotor to turn. However, rotation of the rotor is slowed down by a delay mechanism that provides a delay of 0.8 to 1.3 sec, at which time the stab detonator is in line with the firing pin. The explosive train consists of detonator, lead, booster pellet, and shaped charge.

REFERENCES

a-t Lettered references are listed at the end of this handbook.

1. TM 9-1325-200, *Bombs and Bomb Components*, Dept. of Army, April 1966.
2. *Fuzing Systems for Air Launched Weapons (U)*, Joint Technical Coordinating Group for Air Launched Non-Nuclear Ordnance, JTCG-ALMNO, issued by the Naval Air Systems Command, Washington, D.C., 1966 (Confidential).
3. Marvin Kasper and Arthur Wrenn, *MK 81 and MK 82 Bomb Release Curves*, U.S. Naval Ordnance Laboratory, White Oak, Md., Technical Report 65-230, 20 May 1966.
4. TB 9-1980-1, *Fuze, Bomb: Nose, M904 Series; Fuze, Bomb: Tail M905; Fuze, Bomb: Tail, M906; Fuze, Bomb: MT, M907, M908, M909 and Delay Elements M9, T5E3, and T6E4: Description and Use*, Dept. of Army, February 1966.
5. G. Birkoff, *Drag of Projectiles Without Yaw*, U.S. Army Ballistic Research Laboratories, Report 422, Aberdeen Proving Ground, Md., 30 October 1943.
6. J. J. Gehrig, *Lethal Areas of Some Fragmentation Weapons*, U.S. Army Ballistic Research Laboratories, Report 717, Aberdeen Proving Ground, Md., September 1953.

CHAPTER 13
STATIONARY AMMUNITION FUZES

13-1 GENERAL

Stationary ammunition, such as a mine, is ammunition that is set into place to impede enemy advance. Whereas other ammunition travels to the target, stationary ammunition demands that the target approach it. Its fuzes are designed with the same considerations as those for other ammunition except that environmental forces cannot usually be used for arming action. Fuzes for stationary ammunition contain a triggering device, two independent arming actions, and an explosive output charge. Incendiary and chemical charges are used occasionally. Stationary ammunition is often hidden from view by burying it in the ground, planting it under water, or disguising it in harmless looking objects (boobytraps). Fuzes are initiated by mechanical or electrical stimuli through either contact or proximity action of the approaching target.

13-2 LAND MINES

13-2.1 LAND MINE TYPES

A land mine is a charge of high explosive, incendiary mixture, or chemical composition encased in a metallic or nonmetallic housing with an appropriate fuze, firing device, or both that is designed to be actuated unknowingly by enemy personnel or vehicles. Although meant to damage or destroy enemy vehicles and other materiel or to kill or incapacitate enemy personnel, the primary function of a land mine is to delay and restrict the movements of the enemy[1,2].

Land mines are divided into two general classes designated *antipersonnel* and *antitank*. Antipersonnel mines may be of fragmentation or blast type. Both types may be designed to explode in place, whether buried or emplaced above ground. Others, known as bounding mines, contain an expelling charge that projects the fragmenting component of the mine above ground before it detonates. Antitank mines are used against tanks and other wheeled or tracked vehicles. These mines may be of the blast type or may employ the shaped charge effect. Mines are emplaced manually, mechanically by minelayer, or delivered aerially.

Fuze, M603, a typical mine fuze, is shown in Fig. 1-5, installed in the high explosive Antitank Mine, M15. When pressure is applied to the top, a Belleville spring is reversed and drives the firing pin into the detonator.

Land mines are triggered mechanically by pressure (as Fuze, M603), pull, or release of tension. Pressure-operated antipersonnel mines are designed to be triggered by loads of about 25 lb. Antitank mines are designed so that they will not initiate when a person walks on them. They are triggered by a force from 200 to 750 lb. Hidden trip wires can be used to set off the mine when pulled (tension) or cut (tension releases).

Influence devices such as magnetic dipneedles or magnetometers may also be used to fire antitank mines in cases where it is desirable for firing to occur between the treads of the vehicle. Here, technology must be applied, involving study of the magnetic disturbances produced by moving armor of the weight and speed it is desired to intercept, and the heading in the earth's magnetic field.

13-2.2 REVERSING BELLEVILLE SPRING TRIGGER

Reversing Belleville springs provide a convenient method for initiating land mines. When a force is applied to this special type of Belleville spring in one of its equilibrium positions, the spring flattens and then moves rapidly into its other equilibrium position. As indicated in Fig. 13-1, the spring does not require any external force to snap through to the second position after passing the flat position. These springs are designed with the equations below. In applying the equations it is important that dimensions be consistent. The spring force is given by

$$F = \frac{4E}{d_o^2(1-\nu^2)B}\left[\left(h-\frac{y}{2}\right)(h-y)\,t_s + t_s^3\right]y \qquad (13\text{-}1)$$

F maximum occurs when

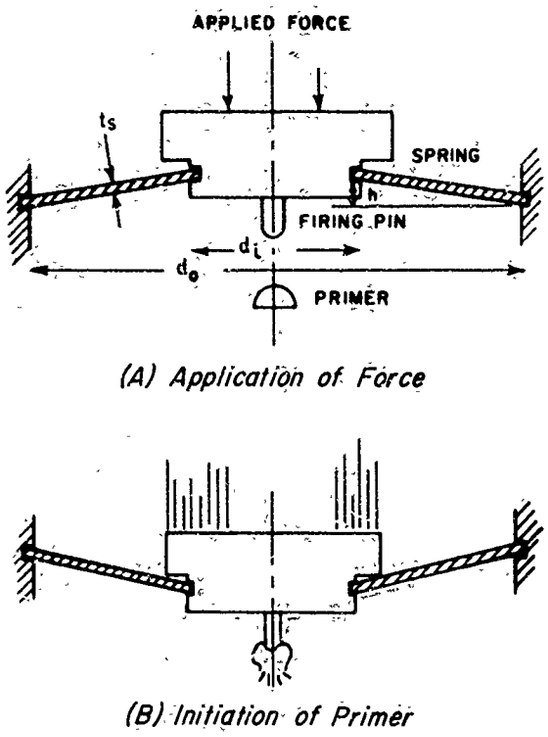

(A) Application of Force

(B) Initiation of Primer

Figure 13-1. Action of Reversing Belleville Spring

$$y = h - \sqrt{\frac{h^2 - 2t_s^2}{3}} \qquad (13\text{-}2)$$

where E is the modulus of elasticity of the material, t_s is the leaf thickness, y is the spring deflection, h is the initial distance of the leaf from the center point (see Fig. 13-1), ν is Poisson's ratio for the material, d_o and d_i are the outer and inner diameters, respectively. B is the following parameter

$$B = \frac{6\,(d_o - d_i)^2}{d_o^2\,\pi\,\ln\,(d_o/d_i)} \qquad (13\text{-}3)$$

Maximum stress σ_{max} occurs on the inner edge of the spring when $y = h$ and is given by

$$\sigma_{max} = \frac{4Eh}{1-\nu^2}\left[\frac{h\left(\frac{d_o - d_i}{d_i} - \ln\frac{d_o}{d_i}\right)}{2\left(\ln\frac{d_o}{d_i}\right)(d_o - d_i)^2} + \frac{t_s}{2\,d_i\,(d_o + d_i)}\right] \qquad (13\text{-}4)$$

For purposes of reliable initiation, the designer may prefer to place the detonator at the position in which the firing pin has the maximum kinetic energy. This position is found by further derivations based on the above equations[3].

Suppose a reversing Belleville spring is needed for a mine that is actuated by a minimum force of 35 lb. According to the space available d_o may be 2 in. and $d_i = 0.5$ in. For nonmagnetic and nonmetallic mines a phenolic laminate ($E = 13.5 \times 10^5$ psi, $\nu = 0.3$) is used for the spring material. This leaves the spring height h and the thickness t_s to be determined. Eq. 13-2 gives the deflection y for maximum pressure in terms of h and t_s. As a trial let $t_s = 0.025$ in. and $h = 0.25$ in. so that y becomes 0.107 in. Substitution of these values in Eq. 13-1 gives the maximum spring force F as 144 lb which is too great for a 35 lb actuating force.

For a second trial, h is reduced to 0.15 in. from which y at the maximum load becomes 0.066 in. Then from Eq. 13-1, the maximum force becomes 31 lb. This value falls within the specified limit.

It remains to determine whether the spring material will withstand the stresses caused by this load. Eq. 13-4 indicates that the maximum stress in the spring σ_{max} is 49,000 psi which is not excessive for a phenolic laminate.

13-2.3 PULL-RELEASE TRIGGER

The pull-release device is a trigger that illustrates the use of a trip wire. One for a land mine is shown in Fig. 13-2[1]. The main fuze body is mounted firmly to the mine. The trip wire is stretched across the expected path of enemy advance and the slack taken up by turning the knurled knob. The safety cotter pin is removed and the device cocked by turning the knurled knob until the safety pin can be removed from its slot. The shoulder on the safety pin and the safety wire are interlocks that require the device to be armed in this sequence. The device is now ready to be triggered.

The pull-release device also serves to provide an antiremoval feature. When the mine is buried in the ground, the device is planted on the mine with the wire attached to the ground. Personnel who remove the mine will set the fuze off.

The essential part of the trigger is an expansible socket shown schematically in Fig. 13-3. When a

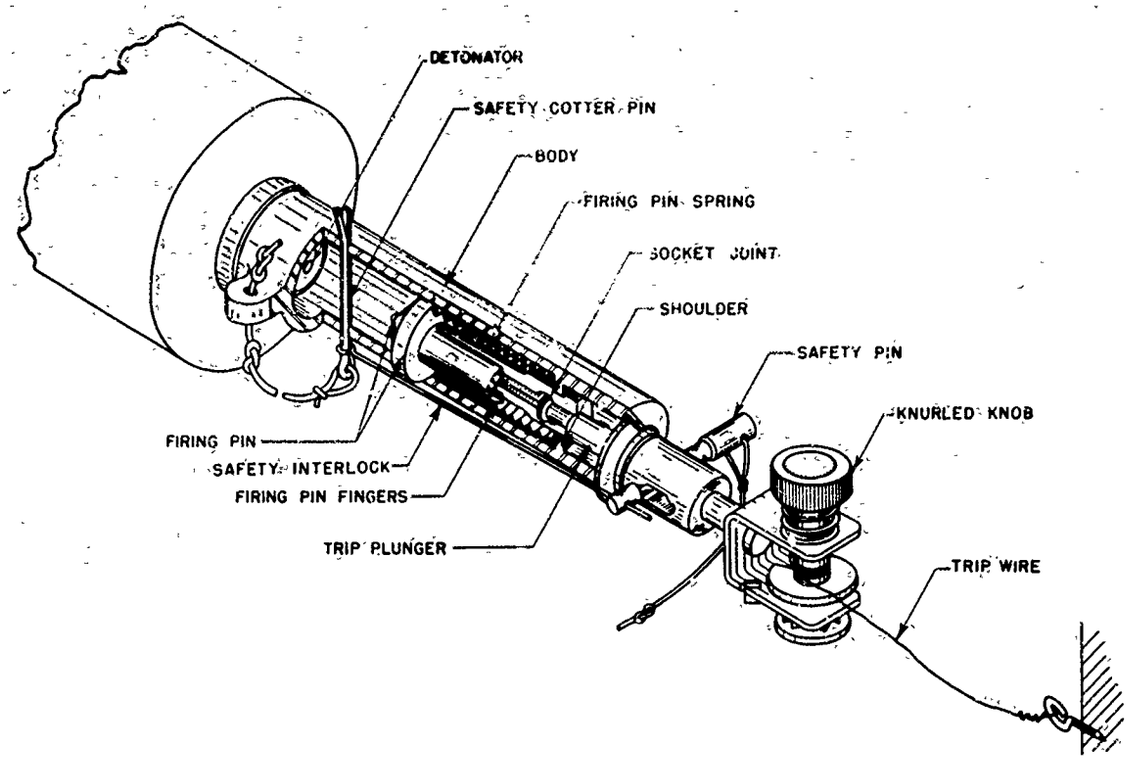

Figure 13-2. Pull-release Device

tension is applied to the trip wire, the trip plunger and the firing pin with four cantilever spring fingers move to the right and compress the coil spring. If the large section of the fingers passes from beneath the shoulder, only the stiffness of the fingers and the friction at the joint can retard their opening. As the spring force F_s increases, the forces at point B increase causing the fingers to deflect and the joint to separate. The trip plunger continues to the right, and the firing pin is driven into the detonator by the firing pin spring.

The forces on the trip plunger and finger are indicated on Fig. 13-3. The force F_1 (acting as the reaction to a concentrated load on a cantilever beam) is given by

$$F_1 = \frac{3EI_A}{l^3} y \qquad (13\text{-}5)$$

where y is the deflection at B, l is the effective length of the finger, E is the modulus of elasticity, and I_A is the second moment of area at the section AA. Any consistent set of dimensions may be used.

If F_n is the component of F_1 normal to the faces of the fingers, the equations of equilibrium will be

$$\frac{F}{4} = F_n \cos\theta + \mu F_n \sin\theta = \frac{F_t}{4}$$
$$F_1 = F_n \sin\theta - \mu F_n \cos\theta \qquad (13\text{-}6)$$

The two equations are solved simultaneously with Eq. 13-5 to yield the trip wire triggering force F_t (perpendicular to the wire)

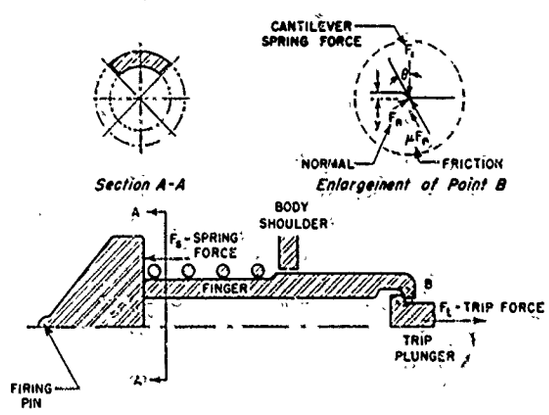

Figure 13-3. Expansible Socket of Pull-release Device

$$F_t = \frac{12EI_A}{l^3}\, y \left(\frac{\cos\theta + \mu\sin\theta}{\sin\theta - \mu\cos\theta}\right) \qquad (13\text{-}7)$$

where μ is the coefficient of friction and y is the deflection necessary for the parts to separate.

The following design criteria are evident: (1) for a sensitive trip wire, the required trip force should not be great, hence (2) the fingers should not be too stiff yet should return to the closed position quickly so as not to engage the shoulder on the firing stroke.

To design a device similar to that in Fig. 13-2, the designer might start with steel fingers one inch long. The cross section of the fingers must be a quadrant of a ring so that its second moment of area is

$$I_A = \left(\frac{1}{8} + \frac{\pi}{16}\right)(r_2^4 - r_1^4) - \frac{8}{9\pi}\frac{(r_2^3 - r_1^3)^2}{(r_2^2 - r_1^2)} \qquad (13\text{-}8)$$

where r_1 and r_2 are the inner and outer radii, respectively. If $r_1 = 0.036$ in. and $r_2 = 0.10$ in., $I_A = 2.0 \times 10^{-6}$ in.^{4} The radial interference between fingers and trip plunger can be 0.005 in. From Eq. 13-7 with $\theta = 30°$, the pull force on the trip wire must be 8 lb to release the firing pin.

When the trip wire is set and the device is cocked, the firing pin spring is compressed two inches. In this condition the fingers will not be forced apart ($F_t = 7.6$ lb) and the body shoulder will continue to restrict their cantilever action. Only after the spring has been compressed another 0.30 in. can the increased section pass the body shoulder. Since the spring force now exceeds the 8-lb release requirement, the fingers can open to release the firing pin.

To determine the sensitivity of the device to a tripping force F_t the following equation may be used

$$F_t = \frac{Fl}{S_t(l - S_t)}\sqrt{\frac{2lS_s + S_s^2}{4} - \frac{2lS_s + S_s^2}{S_s^2}\left(\frac{l}{2} - S_t\right)^2} \qquad (13\text{-}9)$$

where F is the spring force at release, S_s is the distance the spring must be compressed from the cocked position to release the firing pin, l is the trip wire length, and S_t is the distance from the fuze to the trip force. This is illustrated on Fig. 13-4.

If the tripping force occurs at the center of a ten-foot wire, $l = 120$ in., $S_t = 60$ in., $S_s = 0.3$ in., and $F = 8.7$ lb; then $F_t = 1.2$ lb.

13-3 SEA MINES

Sea mines are explosive devices placed in the path of vessels to impede their progress. The inherent strength of a ship requires that sea mines contain large explosive charges usually HBX or TNT. They are actuated when touched or closely approached by a ship. Since concealment in water is relatively easy, size is not necessarily limited so that generally there is abundant space for the fuze mechanisms.

All naval underwater mines fall within one or the other of two broad classes, independent or controlled. Once planted and armed, independent mines are actuated automatically by the presence of a ship. In contrast, controlled mines transmit an electrical signal to a shore station when a ship passes. Personnel at the shore station may either merely observe the signal or may detonate the mine by a return signal. This broad system of classifying mines is cut across by three other classification methods, namely: (1) method of planting (by minelayer, submarine, or aircraft), (2) position after planting (bottom, moored, or drifting), and (3) by type of firing mechanism[4]. The firing mechanism can be activated by contact (electrochemical, galvanic, or mechanical action) or by influence (magnetic, acoustic, or pressure action).

Safety is provided in a number of ways. Surface laid mines usually have a soluble washer that prevents arming until the washer has been dissolved by sea water (see par. 8-3). Aircraft laid mines employ an arming wire just like bombs. Submarine mines have a positive lock safety bar which falls free when the mine is ejected from a torpedo tube. Detonator safety is provided by separating the detonator from the booster. A hydrostatic extender mechanism is a common device for moving the detonator close to the booster charge. Many mines also have a timing mechanism to delay arming for a preset time after planting. This same timer can also serve as

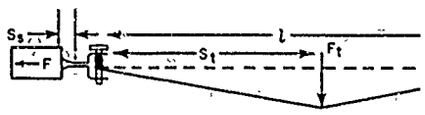

Figure 13-4. Trip Wire Action

a self-destruction mechanism to destroy the mine after a fixed elapse of time.

13-4 BOOBYTRAPS

Boobytraps are explosive charges fitted with a detonator and a firing device, all usually concealed and set to explode when an unsuspecting person triggers its firing mechanism as by stepping upon, lifting, or moving harmless looking objects[5]. The pressure-release type firing device (mousetrap) is an example. Fig. 13-5[5] illustrates the action of the M5 Firing Device. The release plate has a long lever so that a light weight will restrain it. The spring propels the firing pin against the primer when the release plate lifts. The firing pin spring turns the firing pin through an angle of about 180°.

The explosive train in the fuze consists simply of the firing pin and a percussion primer. A tube directs the flash to the base cup which is coupled at the threads. No delay is used. Safety is provided by a safety pin inserted and held by a cotter pin so as to prevent the release plate from lifting. The firing pin spring is of the torsion type in which a wire coil is wound as the device is cocked. This spring force is calculated from the equation

$$F = \frac{EI_A}{lr}\theta \qquad (13\text{-}10)$$

where l is the length of the spring, r is the lever arm of the force F, and θ is the angle of twist in rad for the coil. For this spring the approximate dimensions might be l = 0.50 in., r = 0.50 in., d_w = 0.035 in., so that $I_A = \frac{\pi d_w^4}{64} = 0.073 \times 10^{-6}$ in.^{4}, $E = 30 \times 10^6$ psi, and $\theta = \pi$ rad. F then is 28 lb, and, because of the 7:1 lever ratio, the force on the release plate will be about 4 lb. Thus, a heavy book could serve as the bait for this boobytrap.

A different method of initiating boobytraps is employed in the M2 Firing Device, shown in Fig. 13-6[5]. A friction device initiates a fuze from the heat created by an action similar to that of a safety match being pulled through a pair of striker covers placed face to face. The head of the wire, coated with a friction composition, usually a red phosphorus compound, is supported in a channel by a silicone compound. The igniter compound may be a mixture of potassium chlorate, charcoal, and dextrine.

In addition to serving as a seal, the silicone provides static friction on the shaft. When a force is exerted on the pull wire, the spring deflects until the force is large enough to overcome shaft friction. At this time the shaft slips through the explosive and wipes against the igniter mix. The friction generates enough heat to start the chemicals reacting in order to ignite the charge.

Design of this mechanism, therefore, depends critically upon the force required to overcome shaft friction. The spring should store enough energy to extract the shaft, once motion is started, because the rise in temperature at the interface of head and explosive is a function of shaft velocity.

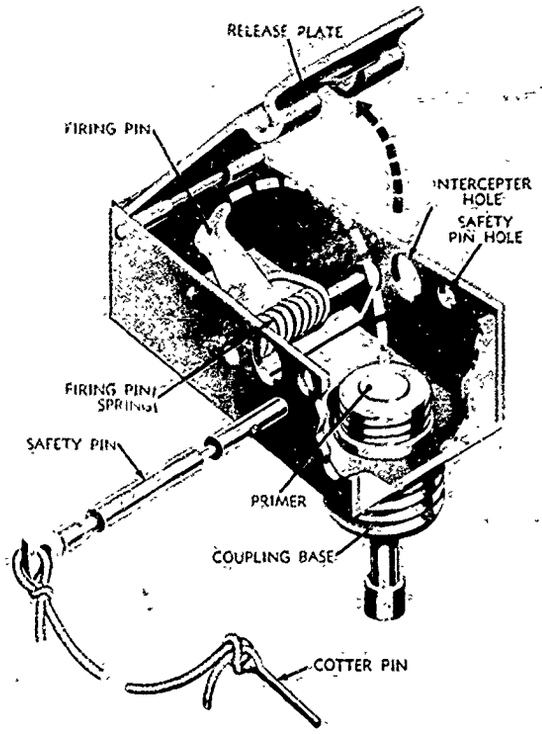

Figure 13-5. Pressure-release Firing Device, M5

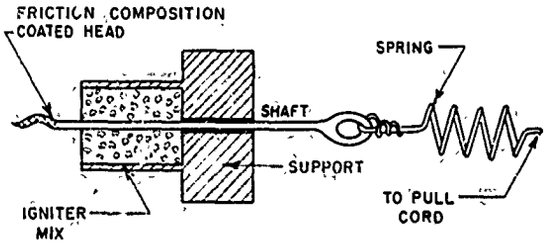

Figure 13-6. Firing Device, M2

REFERENCES

1. TM 9-1345-200, *Land Mines*, Dept. of Army, June 1964.
2. AMCP 706-241 (S), Engineering Design Handbook, *Land Mines (U)*.
3. A. M. Wahl, *Mechanical Springs*, McGraw-Hill Book Co., Inc., N.Y., 1963, pp. 155-175.
4. NAVPERS 10797-A, *Naval Ordnance and Gunnery – Vol. 1*, Bureau of Naval Personnel, Washington, D.C., 1957.
5. FM 5-31, *Boobytraps*, Dept. of Army, September 1965.

CHAPTER 14
DESIGN GUIDANCE

14-1 NEED FOR DESIGN DETAILS

Because military fuzes are subjected to greater rigors than switches, timers, or other commercial devices, their design requires unusual care and attention to detailed features. Fuzes must function reliably, operate over a wide range of environments, and perform without maintenance after long storage. No commercial system, be it electrical or mechanical, is called upon to fulfill all of these stringent conditions. Once the fuze has been manufactured, it is stored until used. It must then perform as intended. For this reason, the fuze designer must make certain that all details are given their proper attention during design and development.

Guidance is provided in this Chapter for several details. This information complements the considerations in fuze design (Chapter 9) concerned with having the fuze function as intended as well as the general design considerations (Chapter 2) treating such factors as design philosophy, economics, standardization, and human factors engineering. Some of the details presented here pertain to common components such as switch contacts or time setters. Others treat the use of materials and lubricants, the selection of which can adversely affect fuze performance. Subjects like tolerancing, potting, and packaging deal with assembly problems.

14-2 PREVENTION OF CONTACT CONTAMINATION

The widespread use of transistor circuits in fuzes for electromechanical devices such as relays and switches has emphasized the problem of contact failure in low-level switching circuits. Since transistor circuits are characterized by low voltages and currents, care must be exercised in the selection of the contacts employed. A high percent of relay failures can be charged directly to contact failure. One of the most prevalent factors that causes contact failures is contamination which results in excess contact resistance and wear.

Many switch contact contamination problems are due to oversight. Fuze designers are apt to consider components as complete items with little attention given to their materials of construction until a failure or high contact resistance occurs that could possibly be the result of the outgassing of organic plastic materials. Erratic contact behavior can be minimized by monitoring the choice of materials and by cleaning.

No contact material is adequate for all switching situations and compromises must always be made keeping in mind the most critical characteristics to be satisfied. The contact material should have the following ideal characteristics:

(1) Conductivity of copper or silver
(2) Heat resistance of tungsten
(3) Freedom from oxidation of platinum or palladium
(4) Resistance to organic film formation of gold
(5) Inexpensiveness of iron.

There are two distinct types of contact contamination, organic or thin film contamination and particle or particulate contamination[1]. The effect of particle contamination can be highly disastrous because of its erratic behavior. Monitor tests can show low resistance for hundreds of operations with a sudden rise to a very high resistance value. Since not all particles can be burnt away by the contact current and voltages, it is evident that particulate contamination can persist for a very long time. Organic film contamination, on the other hand, will generally indicate a gradual rise in the contact resistance and can be partially burnt away if the voltages are high enough.

Particle contamination can be caused by:

(1) Poor choice of insulating material
(2) Poor cleaning of machined and finished parts
(3) Use of poor grades of internal gas
(4) Normal wear or erosion particles.

Organic film contamination can be caused by:

(1) Poor choice of insulating materials
(2) Inferior cleaning techniques
(3) No bake-out of organic parts
(4) Poor choice of soldering techniques
(5) Poor hermetic sealing

(6) Lubricating oils.

(7) Organic dyes present in anodized protective coatings.

When contamination—particle or organic film—occurs, the following steps should be taken:

(1) Determine if the contact requirements are realistic.

(2) Determine if wiping action and contact pressures can be increased without adversely affecting the operation of the device.

(3) Make an initial, simple chemical analysis test of contaminant.

(4) Determine if the contamination problem is of a particle nature, organic film nature, or both. Some of the methods for analysis are solubility tests, spectrographic analysis, chemical spot tests, microscopy, electron microscopy, electron diffraction, X-ray diffraction, radioactive tracers, infrared spectroscopy, and plastic replica[2].

(5) Take appropriate steps to eliminate the contamination by a complete materials review of metals, insulators, and gases used, an inspection of the manufacturer's quality control and cleaning techniques, and an inspection of the validity of test results for the hermetic seals.

14-3 PACKAGING

Safety in transportation and storage depends to a large degree on how the fuze is packaged. Although specifications and packaging designs have been standardized, the designer should be familiar with the various levels of shipment as they might affect his design. A packaging handbook should be consul ed[3].

For the most part, the packaging of fuzes has been standardized[4]. For overseas shipment (Level A), 8 artillery or 10 rocket fuzes are packaged in a water-vaporproof, rectangular, quick-opening type, metal box having polystyrene supports to contain the fuzes (Fig. 14-1). Two metal boxes are overpacked with a wooden wirebound box. For long term storage (Level B), 36 metal boxes of packaged fuzes are placed in a pallet type box. For interplant shipment (Level C), the assembled or partially assembled fuzes are packaged in a fiberboard carton utilizing the same polystyrene supports used in the metal boxes. The rocket fuzes are placed in a carton having an eggcrate type separator. The cartons are overpacked with an inexpensive wooden wirebound box.

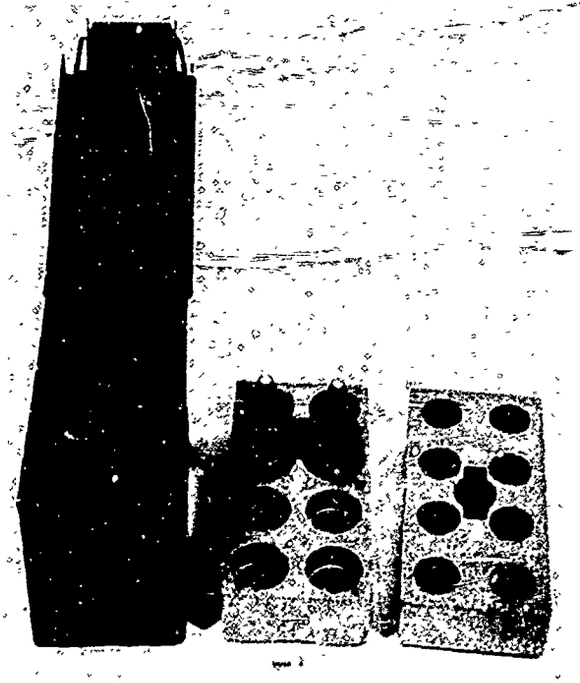

Figure 14-1. Packing Box and Fuze Supports

14-4 LINKAGE OF SETTER COMPONENTS

Designs of mechanical setter devices should include consideration of the linkage of the setter components and setter display components in conjunction with the device being set.

The parallel mechanical linkage (Fig. 14-2(A)) permits concurrent positioning of setter display components and the item to be set. This type of linkage could cause the display of a false reading because the setter display does not necessarily have to agree with the information actually set into item (the linkage to either the setter display components or item being set could be faulty). The series linkage (Fig. 14-2(B)) is little improvement over the first because the linkage to the item to be set could be deficient even though a setting is displayed. Deficiencies are more prone to occur in the high-torque gear trains of the item to be set rather than in the low-torque gear trains of the setter display assembly (the linkage between the two could shear). The most reliable and safest linkage (at no increased costs) is a different series linkage (Fig. 14-2(C)) in which the setting actually positioned into item being set is displayed after the fact of actual setting.

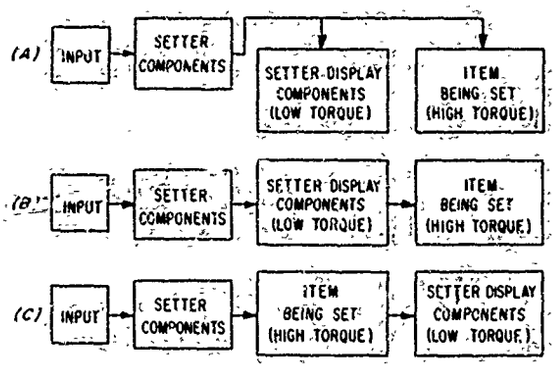

Figure 14-2. Linkage of Setter Components

14-5 MATERIALS

The characteristics and properties of the engineering materials used in the construction of fuzes are best determined by consulting handbooks and specification sheets provided by manufacturers. The materials are continuously subject to improvements because of development work, and technical data are subject to constant revision. This paragraph, therefore, presents information only on a few special materials of particular interest to the fuze designer.

14-5.1 POTTING COMPOUNDS

Potting compounds are used to encapsulate electronic parts for protection against temperature, pressure, moisture, dirt, corrosion, fungus, vibration, shock, and arcing between components.

The electronic components of moderate power rating, such as those used in fuzes, are more reliable and have longer life when properly encapsulated. In this case the potting material provides not only protection from the adverse environments but also structural rigidity.

Disadvantages of potting electronic components are: (1) replacing wires and components of a potted assembly is almost impossible, (2) compounds generally do not withstand very high or very low temperature, (3) since the potting material occupies all free space in an assembly, it sometimes adds weight to the assembly, (4) the circuit must be specifically designed for potting, (5) extra time and labor are required to clean the circuit and to protect components prior to embedment, (6) component heat is trapped and retained by the insulating character of the potting compound, and (7) potting compounds may affect the electrical characteristics of a circuit.

The most common types of potting compounds in use are: epoxies, polyurethanes, polyesters, and silicones. Typical characteristics of these potting materials are shown in Table 14-1[5].

Some potting formulations may be incompatible with explosives. If the potting resin and explosive are not in close proximity, incompatibility is of little concern. Curing of some resins directly in contact with explosives is the most risky condition. Also, intimate mixtures of precured resins with certain explosives may be dangerous. It is the amine curing agent and not the resin itself that is incompatible with an explosive. Frequently, acid anhydride curing agents can be used near explosives if temperatures are not too high. In any event, the fuze designer should always specify that materials used near explosives must be compatible with them[6].

The potting compound desired for a fuze assembly should:

(1) Hermetically seal the unit from its environment with a minimum of stress at the boundaries and a minimum of strain in the resin itself.

(2) Support the unit and cushion it from shock. This requires some resiliency at all operating temperatures.

(3) Provide good electrical insulation at all frequencies, and low absorption especially at high frequencies.

(4) Protect the unit from extreme temperature changes, yet dissipate the internal heat generated.

(5) Be transparent so that embedded components can be seen.

(6) Have good adhesion to all potted surfaces including sides of the container.

(7) Have a curing or baking temperature not higher than 150°F. Have low internal temperatures due to controlled, slow exothermal reaction.

(8) Not shrink during curing.

(9) Not become brittle at temperatures as low as −65°F, melt at high temperatures, or lose any of the above desirable qualities at any operating temperature.

(10) Resist deterioration by the weather and chemical agents.

(11) Be compatible with the embedded components and adjacent materials.

(12) Not cause organic or particle contamination of electrical contacts (see par. 14-2).

TABLE 14-1. COMPARISON OF PROPERTIES OF TYPICAL POTTING MATERIALS

Material	*Linear Shrinkage*	*Thermal Expansion*	*Thermal Conductivity*	*Volume Resistivity*	*Dielectric Strength*
Epoxy					
Unfilled	very low-med.	low-high	low-medium	good-excel.	very good
Filled (rigid)	very low-low	low	high	very good-excel.	very good-excel.
Filled (flexible)	low-high	low-high	medium	good-very good	very good
Syntatic	very low-low	very low	very low-low	very good	good
Polyurethane					
Foam	very low	low-high	very low	very good	(not avail.)
Cast	very low-high	high	very low	good-very good	good-very good
Polyester					
Filled (rigid)	med.-very high	low-high	medium	good-very good	very good
Filled (flexible)	med.-very high	high	medium	good	good-very good
Silicone					
Cast (filled)	low	high	very high	excellent	good
RTV rubber	high	very high	medium	very good	very good
Gel	very low	very high	medium	excellent	excellent

Key to Ranges

LINEAR SHRINKAGE, (in./in.): very low 0.002; low 0.0021–0.004; medium 0.0041–0.010; high 0.0101–0.010; very high 0.0201.

THERMAL EXPANSION, (in./in.°C) × 10^{-5}: very low 2.0; low 2.1–5.0; high 5.1–10; very high 10.1 (figures referenced against aluminum).

THERMAL CONDUCTIVITY, (cal/sec/cm² /°C per cm) × 10^{-4}: very low 1.5; low 1.6–4.0; medium 4.1–9.0; high 9.1–20; very high 20.1.

VOLUME RESISTIVITY, (ohm-cm): good 10^{11}–10^{12}; very good 10^{13}–10^{14}; excellent 10^{15}–10^{17}.

DIELECTRIC STRENGTH, (volt/mil): good 225–399; very good 400–500; excellent 500.

14-5.2 SEALING MATERIALS

In addition to the potting compounds, the selection of sealing methods for fuzes requires the careful consideration of the designer.

A sealant is a liquid or paste which is applied to a joint to prevent or reduce the penetration of gases, liquids, dust or all of these. Two types of joints on which sealants are often used in fuze construction are the butt or crimped joint, and the threaded joint. A sealant used on threads must not act as a cement for the threaded joint, but must be easily broken to permit inspection or repair of enclosed components. A sealant for a butt or crimped joint has greater latitude because this type of joint is usually a permanent one and cementing is desired.

The term sealing materials is also one which refers to the sheet stock and molded shapes of resilient character which form the gasket type of seal commonly used in fuzes. The materials most often used for this purpose include natural rubber, synthetic rubber, and plastics. Whenever possible, the designer should use this kind of mechanical seal rather than liquid or paste because production quality is more readily assured.

The locations and uses of seals in a typical electronic fuze are shown in Fig. 14-3.

The following factors must be carefully weighed when selecting a sealant or sealing material:

(1) Physical properties of the sealant or sealing material, such as tensile strength, compression set, elongation, and hardness.

(2) Chemical compatibility. The seal must be chemically compatible with the metals, fuels, lubricants, explosives, acids, or other materials to which it may be exposed (see also item (4) below).

(3) Storage characteristics. The seal must withstand exposure to a wide range of environments over a long period of time in storage.

(4) Outgassing. Any products of outgassing, especially during the curing process of the sealing

material, must not cause particle or organic contamination of electrical contacts (see par. 14-2) nor fouling or corrosion of other fuze parts.

(5) Temperature.

No sealant or sealing material has all the qualities required. The problem, then, is to choose the best combination of characteristics. Choice is usually based primarily on the overall physical and chemical properties of the materials and secondarily on its aging properties. Other things to be considered before a final decision is made are availability of materials, cost, ease of application, toxicity, useful pot life, and service life[7].

The materials commonly used as sealants include various rubbers, neoprene, polyesters, alkyds, phenolics, vinyls, and flexible epoxy resins[8]. No sealant has been found which will produce a joint as tight as a well-soldered joint.

The designer should look to the present effort made to apply one-component sealers so as to avoid pot life problems.

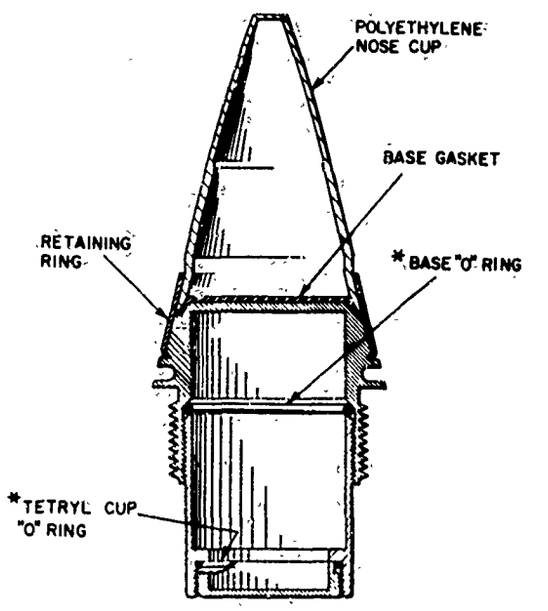

NOTE: *"O" RINGS COATED WITH DOW-CORNING TYPE D-C-33 SILICONE GREASE OR EQUAL

Figure 14-3. Location of Seals in a Typical Electronic Fuze

14-5.3 SOLDERS

Solders are one of the more troublesome engineering materials[9,10]. The two general classes of solder are soft solder and hard solder.

Soft solders, which are used extensively in electric and proximity fuzes, have a number of desirable properties. Some of these are:

(1) They can be used to join metals at relatively low temperatures.

(2) They can withstand considerable bending without fracture.

(3) They can usually be applied by simple means and can be used with metals having relatively low melting points.

The most commonly used soft solders are tin-lead alloys. These soft solders have the primary disadvantage that they have low strength compared with the metals usually joined. Characteristics of soft solder alloys are shown in Table 14-2.

Conductive adhesives can sometimes be used in applications where heat generated during the soldering process might damage temperature-sensitive components. Typical applications include bonding barium titanate elements together or to ferrite rods, making electrical connections to battery terminals, and repairing printed circuits.

14-6 CONSTRUCTION TECHNIQUES

Two important aspects must be considered in the design of a fuze. First, the components must be selected and incorporated into the fuze in such a manner that they will perform their intended function properly. Second, the components must be assembled into the completed fuze so as to maintain their integrity, their relationship with one another, and their functioning reliability in spite of the extreme environment to which they are subjected. This second aspect requires unusual care in the construction and assembly of the fuzes in order to assure proper performance.

14-6.1 MECHANICAL CONSIDERATIONS

The permissible volume and weight of the fuze and its location are generally specified at the start of a program. The anticipated fuze environments during operational use and during storage, handling, and transportation are also specified. These environments, particularly any unusual ones, must be kept in mind from the start of a fuze program.

When designing housings, packages, and other mechanical parts of a fuze, it is not sufficient to consider only the mechanical requirements for

TABLE 14-2. LOW-MELTING SOFT SOLDERS USED IN ELECTRICAL EQUIPMENT

Sn, %	Pb, %	Bi, %	Cd, %	Liquidus, °F	Solidus, °F	Use
30	70			361	496	Wiping solders
35	65			361	477	
40	60			361	460	General purpose, radio, TV
45	55			361	441	
50	50			361	421	
60	40			361	370	Electronics, printed circuits
62	38			361 eutectic	361	
16	32	52		205 eutectic	205	Low temperature
25	25	50		266	205	
37.5	50	12.5		374	205	
50	25	25		338	205	
51	31		18	288 eutectic	288	Low temperature

strength, volume, and weight. In many instances, their effect on the performance of the fuze must be considered. The dimensions of some parts, and the tolerances on the dimensions, may have a direct relation to performance. On other parts, the degree of stiffness or positional variation under conditions of shock or vibration may affect the performance of a fuze.

Many mechanical design problems can be eliminated by following a logical design approach. A suggested approach is as follows:

(1) Determine the mechanical requirements in shape, dimension, rigidity, material, and finish imposed by the functions of the fuze.

(2) Determine the mechanical requirements in shape, dimension, strength, material, and finish, etc., imposed by operational use, transportation, handling, and storage.

(3) Make a preliminary design and check critical elements for stress, resonant frequency, static and dynamic balance, etc.

(4) Examine these designs with respect to ability of the shop to manufacture and to maintain the required tolerances (see par. 14-8).

(5) Check the preliminary designs by observing the performance of a preliminary fuze model subjected to tests pertinent to the verification of the design.

(6) Revise the design as indicated by the model tests and repeat the tests if necessary.

(7) Design all fuzes, with the possible exception of the most inexpensive designs, so that they may be taken apart should a functional or safety failure occur in subsequent lot acceptance testing.

(8) Locate or orient functional components so as to experience the least detrimental effect from interior and exterior ballistic environments.

(a) Orient gear and pinion assembly in timers if possible so that the pinion shoulder supports the gear under setback loading rather than relying on the staking or spin operations used in assembling the gear to the pinion to accomplish the required structural integrity under setback.

(b) Use a vertical hairspring in the Popovitch escapement to reduce hairspring distortion due to ballistic environments thereby increasing timer accuracy.

(9) Prepare the manufacturing information, incorporating all of the information which must be observed in the manufacture and inspection of the fuze.

14-6.2 ENCAPSULATION

One of the most commonly used methods of maintaining the functional relationship of components and preserving the integrity of the fuze is that of encapsulation of the main fuze assembly. The materials used for encapsulation are described in par. 14-5. The present discussion is

concerned with encapsulation as a construction technique.

The basic encapsulating methods are potting, dipping, coating, and casting. Potting involves melting the embedding compound and pouring it into a pot or mold. The pot is normally left in place and the resin used is comparatively soft. Dipping and coating are generally confined to single components such as coils, resistors, or capacitors. Casting usually involves the use of resins which require the chemical process of polymerization to set. The resulting compound is hard and the mold is stripped from it. Molds may be made of metals or rigid plastics.

Two different approaches are possible in the embedment of electronic assemblies. One is to embed the entire circuit in one large casting. The disadvantage of this is, if one component fails, the entire circuit is useless and must be discarded. The repair of embedded circuits is difficult because dissolving the resin is time-consuming and may be injurious to elements of the circuit. Drilling and other machining processes to gain access to defective components are expensive, time-consuming, and practical only where clear resins have been used.

The second approach is to make several smaller castings, embedding components such as tubes (having high failure rates) separately. This reduces the possibility of having to throw away large castings containing many usable components when one component fails. Ideally, unit casting should contain components having similar life expectancies.

14-6.3 SUPPORTING STRUCTURE

Because of the extreme environments of shock and vibration in which fuzes must operate, a great deal of design effort is devoted to the main structure of the fuze. There are two common concepts used in the construction of the main fuze structure—the catacomb concept, and the central spine support concept.

Fuzes for conventional weapons, such as rockets and mortar projectiles, are generally of catacomb construction. Ideally, all parts should be made as a block so that the completed fuze is literally "as solid as a rock."

Fig. 14-4 shows the basic construction of a typical mortar proximity fuze. The top part, which is made of plastic, contains a four-tube electronic system with the RF oscillator in the nose of the fuze. The remaining electronic components, consisting of a two-stage amplifier and a thyratron firing circuit, are mounted immediately below the oscillator tube. A plastic catacomb, which houses many of the electronic components, is shown in the lower right part of Fig. 14-4. The catacomb also serves as a mounting block around which the components are wired (Fig. 14-5). In other applications, printed end plates have been used on one or both sides of the catacomb (Fig. 14-6).

The catacomb may be molded from a plastic material, cast, die-cast, or machined from metal. Sometimes the catacombs are also molded and fired from a ceramic material.

Fuzes for missiles often use the central spine support concept. In this type of construction, a structural shape, usually an I or cruciform section, is used as the central frame of the fuze. The components of the fuzing system are attached to this frame, then joined by interconnecting cabling, with the covering skin forming a second portion of the structure surrounding the fuze.

14-7 LUBRICATION

A lubricant is expected to perform the jobs of minimizing friction, wear, and galling between sliding or rolling parts. It must do these jobs under two types of conditions: (1) those which are inherent in the component element itself—such as load, speed, geometry, and frictional heat—and (2) those which are imposed from external sources—such as temperature and composition of the surrounding atmosphere, nuclear radiation, inactive storage, vibration, and mechanical shock. The imposed conditions are usually the more restrictive ones for lubricant selection.

Mechanical fuze components contain elements which undergo a variety of sliding and rolling motions, and combinations of the two. For example, a mass translating on guide rods involves linear sliding only, the balls in a ball bearing involve essentially all rolling motion, and meshing gear teeth surfaces experience both rolling and sliding motions. For any given type of motion, the lubricant found to be satisfactory in one case will not necessarily be suitable for another if loads, speeds, etc., are not similar.

Selection of the proper lubricant requires not only knowledge of the specific function which the lubricant is required to perform in the device being lubricated but also consideration of

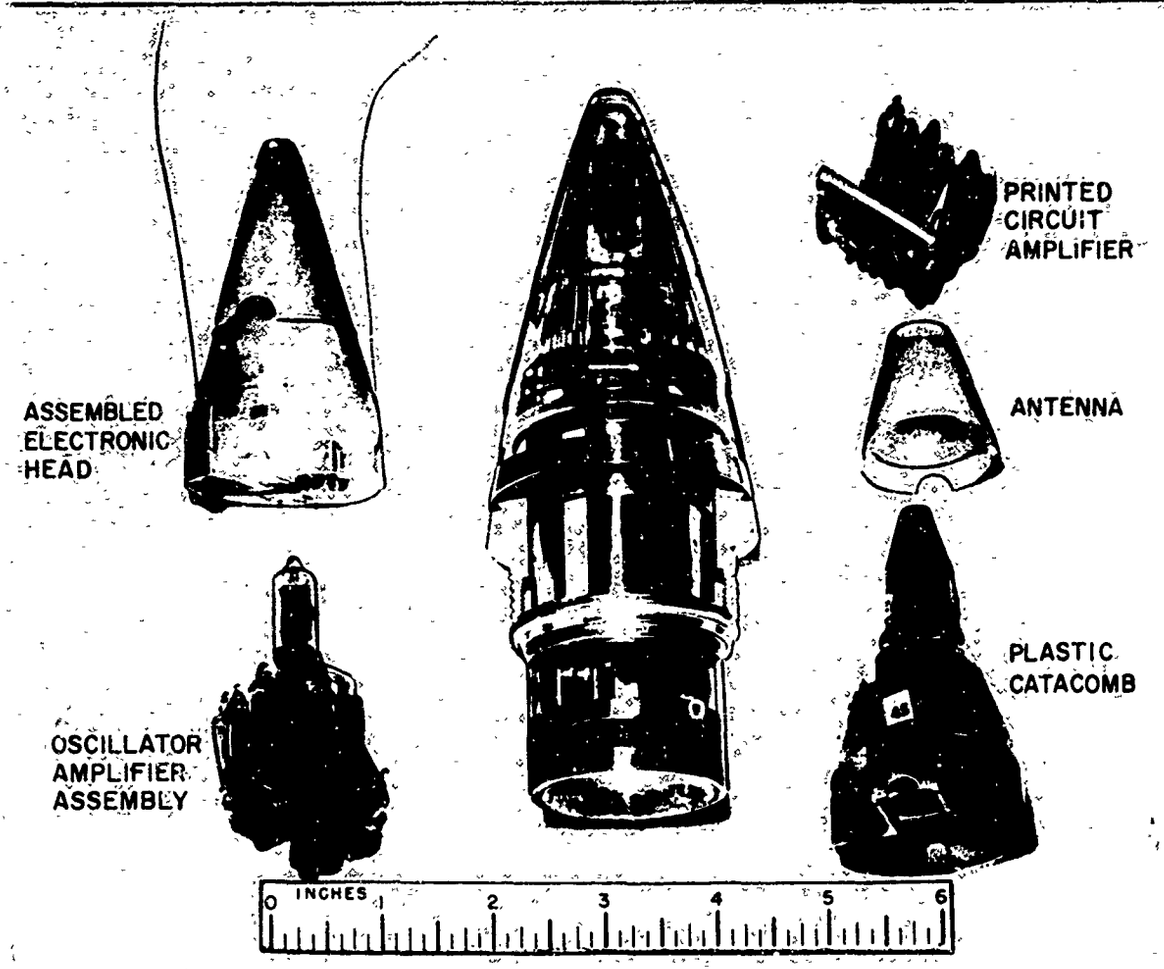

Figure 14-4. Construction of Typical Mortar Fuze, M517

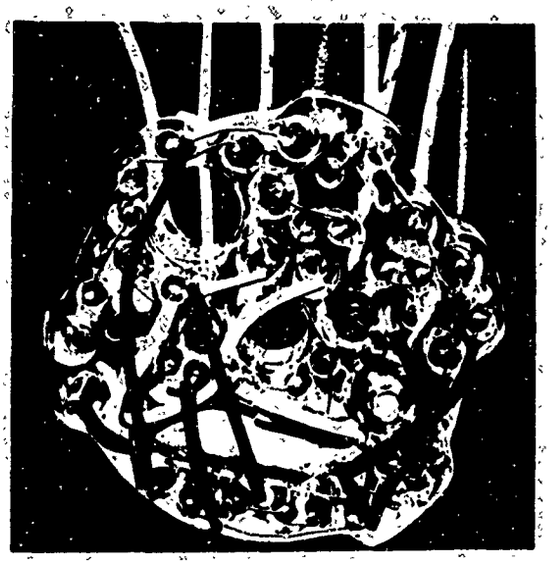

Figure 14-5. Catacomb Amplifier

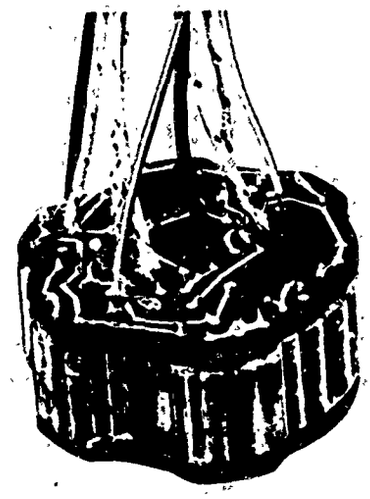

Figure 14-6. Catacomb Amplifier With Printed End Plates

the interactions include chemical processes—such as corrosion of the metal parts by components of the lubricant, e.g., corrosion due to oxidation of MoS_2 in the absence of suitable inhibitors, or solution of copper alloys during lubricant oxidation processes; or physical interactions, e.g., attack by active organic materials on synthetic elastomers and plastic structural members. In addition, the inherent stability of the lubricant must be considered. Stability is of particular importance if storage for long periods of time with or without elevated temperatures (which speeds up oxidation rate) is involved. (In general, lubricants are inhibited against oxidation by appropriate additives, but since temperature is an important parameter, the oxidation stability characteristics of the lubricant should be taken into account in connection with the expected storage life and pertinent temperatures of the mechanism being lubricated). Oxidation of fluid or semi-fluid lubricants may lead to thickening of the lubricant with consequent increased forces being required for operation, or corrosive attack on the materials of construction.

A wide variety of fluid and semi-fluid lubricants are available covering a wide temperature range of applicability, a range of compatibility with organic and inorganic structural materials, and a range of other properties which may be pertinent, e.g., nonspreading, lubricity, etc. In addition, both dry powdered and bonded solid-film lubricants are available. The choice of a lubricant depends on the totality of functions which the lubricant must perform, and the structural and functional features of the mechanism being lubricated. For example, a very severe nonspreading and low vapor pressure requirement in connection with long term storage may lead to a choice of a solid lubricant; whereas adhesion problems with bonded lubricants at high loads or with thin films associated with low mechanical tolerances may complicate the use of dry film lubricants. In fuzes subject to high rates of spin (above 25,000 rpm), fluid and semi-fluid lubricants tend to be displaced by centrifugal force causing loss of lubricant and possible contamination of other fuze parts. Requirements for corrosion protection may require additives not accessible with dry lubricants.

In simpler fuzes, choice of proper materials, plating, and finishes can obviate a separate lubricant.

Descriptions of available lubricants—oils, greases, and solid—with summaries of their properties are contained in a JANAF Journal Article[11].

14-8 TOLERANCING

All fuze parts must be properly toleranced following good design practice. Every length, diameter, angle, and location dimension must be given and defined in tolerances as broad as the performance of the part can tolerate to permit most economical manufacturing procedure. Particularly in high-volume parts, costs rise rapidly as tolerances are made tighter. All fits must be stipulated. These fits should be chosen with primary consideration for function and accuracy, but they should be usable in inspection and manufacturing. All tolerance combinations and permutations must be both workable and safe.

Assembly drawings can readily show the physical relationship of various components but interferences and clearances must be calculated from the dimensions[12]. Tolerance stack-ups indicate whether parts can be properly assembled and whether an assembly will operate as expected. Consideration should be given to expected user environments, temperature extremes, and their effects upon critical interference and clearance fits.

It is imperative in the development of mechanical timers and fuzing that tolerance stack-up determinations be complete before the manufacture of development hardware. It is further imperative that all engineering change orders (development and production) request continual review, revision, and updating of original stack-up calculations with every contemplated change. This is extremely important because tolerances in mechanical timer and fuzing systems are on order of 0.001 inch. Value engineers must be particularly alert to this requirement. Even extremely small undesired interferences and/or clearances can cause: (1) expensive failures, those that are difficult to debug, (2) delay in meeting schedules, (3) cancellation of ideas that are worthy of continued effort, (4) failures of an inconsistent nature, (5) inability to apply corrective measures, and (6) uncontrollable quality assurance programs.

The true-position dimensioning system (defined in MIL-STD-8B) is a method of expressing accurately the location and size of critical features of mating parts. True-position dimensioning

consists of establishing exact locations of important features, identifying these locations as exact or basic, and using the true position symbol, with a tolerance, to control the variation of the future. The system should be applied where close control or precise interpretation of locations is needed. It involves calculating tolerance limits early in the design stage. This, in turn, encourages the use of realistic and practical dimensions to satisfy design intent

Tolerancing affects the interchangeability of components. Complete interchangeability of components is desirable whenever feasible. However, in complex mechanisms, such as timers, where components are small and tolerances are critical, complete interchangeability is often impractical. In these instances, conformance with the tolerance specifications may be achieved by selective assembly of parts.

14-9 COMPONENTS

14-9.1 SELECTION OF COMPONENTS

In many cases, failure of a fuze component is a greater calamity than failure of a component in another system. Early activation can cause a personnel hazard. Improper activation results in failure of the weapon after other systems have done their job.

When selecting fuze components, the fuze designer must bear in mind that many components of questionable reliability for long-time applications may be entirely suitable for use in fuzes. Components with a relatively short operating life or with failure rates that rise sharply with cycling might not be usable in other types of systems. These components, however, might be quite satisfactory for fuzing applications. Even though some fuzes undergo many tests prior to actual use, their total operating life expectancy is normally much less than that of other weapon system components, and they are subjected to far less cycling. Similarly, tolerances of some components may prohibit their use in certain types of electronic equipment, but they might be used in an on-off fuze application.

The factors working against fuze component reliability vary with the type of fuze with which the components are used. The requirements for long inactive shelf life, extreme environmental conditions while in operation, and the inability to pretest for complete function before use add to the difficulty in the selection of components.

For these reasons, the designer should use standard components whenever possible (see par. 2-4); he must be well acquainted with the environmental conditions under which the fuze operates (see par. 9-2.1); he must also recognize the effect of the combination of different conditions. Of particular importance is the relationship between temperature and rate of chemical action. This relationship is a critical factor affecting the storage life of equipment. Explosive components present special problems to the fuze designer (see Chapter 4).

14-9.2 ELECTRICAL COMPONENTS

Electrical components are those electric elements used in the circuits of electric fuzes. Capacitors, resistors, inductors, transformers, switches, transistors, and tubes have special problems as a result of their environment that put stringent requirements on their ruggedness, aging, and temperature characteristics. In addition, the components must meet many other specifications depending upon the particular fuze in which they are to be used.

Components must be rugged enough to operate after withstanding setback forces, high rotational forces, and occasionally severe deceleration forces imposed by target impact. To alleviate these requirements, components can be mounted in a preferred orientation. For example, a fuze which is subjected to high rotational forces can have its components so mounted that the rotational forces operate on their strongest dimensions. Another solution is to pot all of the components so as to add strength to the entire configuration and to give added support to the wire leads.

To relieve the effects of aging and thermal changes, three solutions are available: (1) components might be used whose original properties are adequate (to begin with or after burn-in); (2) the fuze or the components alone may be hermetically sealed to prevent excessive damage from the environmental conditions; or, (3) the components can be so chosen that the variation in one is opposed by that in another. The third indicates that careful selection could minimize the total effect in the circuit. For example, in a simple RC circuit, a resistor whose value increases with increasing temperature can be coupled with a condenser whose value decreases

with increasing temperature. If the changes in these components are comparable, then the net effect on the RC time constant is small.

At present, practical limitations of size and ruggedness on components limit the maximum time delay possible with RC operated devices to an order of magnitude of ten seconds. Resistors are available up to 10^{12} ohms and capacitors for fuze circuits are limited to a maximum of 10^3 microfarads.

An additional problem is introduced with cold cathode diodes and triodes. These tubes depend upon light to provide initial ionization. This problem has been solved by placing a band of radioactive material around the tube. The band helps to obtain a consistent breakdown voltage. The choice between a diode and a triode is often made on the basis of available energy because a triode, while slightly more complicated, has more efficient energy transfer characteristics.

Switches must be positive in action, must close every time; should have as low power losses as possible, i.e., low contact resistance; and should remain closed sufficiently long to permit the power source to deliver adequate energy to the circuit.

14-9.3 MECHANICAL COMPONENTS

Mechanical components are the operating mechanical elements used in fuzes. Some examples of these components are safing and arming mechanisms, arming rotors, timers, accelerometers, and power-operated switches.

These components differ from the electrical components in that they are not usually available as standard items. It is often required that the fuze designer provide mechanical components having characteristics different from those presently in use. In this case it is to his advantage to reap the benefits of previous work in the field by starting with the basic features of an existing design having similar characteristics. In this way, the reliability and environmental resistance of the basic design are incorporated into the new design.

The mechanical components must be rugged enough to perform reliably and to withstand the setback, rotational, creep, and target impact forces that are imposed. One of the major problems encountered in the design and application of operating mechanical components in fuzes is that of maintaining the proper frictional characteristics after long periods of inactive storage. Lubricants, if used, must be carefully chosen (see par. 14-7). In components where the parts require operating clearances, there is the possibility of *fretting corrosion* that will inactivate the component.

To relieve the effects of aging and thermal changes, several solutions are available. The fuze or its components may be hermetically sealed, the components may be chosen so that their performance is more than adequate, or the component design may be such that any variation in performance with time would be in a noncritical direction.

14-10 USE OF ANALOG COMPUTER

The analog simulation technique is a valuable tool in the design of fuzes. This technique will reduce the number of preliminary tests and will aid in the determination of effects that are difficult to evaluate by other means.

The equations describing fuze behavior are extremely time-consuming to solve without the aid of a computer. Also, the instrumentation to monitor the performance of various components in proving grounds tests is complex. The usual test result determines only whether the fuze functions or not.

In contrast, the analog computer determines the elemental behavior of the fuze under controlled laboratory conditions where every variable is easily changed and its influence on each component observed. For example, the effect of different setback forces or the effect of varying design parameters such as masses or spring constants can be readily investigated.

Fuzes of many different types have been analyzed using analog simulation[13-15]. These fuzes have included components such as mass-spring systems with various types of spring, clockwork mechanisms, dash pots, gear trains, rolling balls, sliders, and rotors. The simulations involve a substantial amount of logic elements to account for the various operations such as the movement of a detent a certain distance freeing another component and "bottoming and topping" action of springs.

Analog simulation is used by the test engineer to provide a more directed and economical testing program by providing more information about the performance of the fuze. In cases where manufactured fuzes are not functioning as

required, simulation can often indicate the troubled area. Also, where it is desired to use proven fuzes for new applications, simulation is useful because any type of setback curve can be applied to the computer "model" of the fuze. Often a change in a fuze component is suggested such as use of a lower cost material. The physical characteristics of this material could affect the functional performance of the fuze. This change can be investigated on the analog computer, possibly saving needless manufacture. Tolerance studies have also been performed on the analog computer to determine what tolerance range of a fuze component is permissible without changing the required functioning.

The fuze simulations mentioned above are typical of the many that have been performed. With the advent of hybrid simulation, the possibilities for these fuze studies are unlimited. This type of equipment is well suited to these investigations because results are immediately obtained in a meaningful presentation. With the repetitive operation feature of this equipment it is possible to rapidly optimize a fuze design.

A typical application of the analog simulation technique was the analysis of performance of a proposed 81 mm mortar fuze. Given the blueprints for the proposed fuze and the weights of its components, the equations of motion of the various parts of the fuze were simulated and solved on the analog computer.

A visual display was set up to show the movement of the main parts of the fuze. The pictorial display (Fig. 14-7) used cardboard cut-outs to simulate moving parts. Time was scaled by a factor of 10^4 (10 sec of computer time representing 1 msec of real time) to achieve slow motion. The board aided in visualizing the problem and proved useful in evaluating the design.

The arming of the fuze was studied for two different setback functions: (1) a 40-foot drop test, and (2) a zone-zero, charge-zero setback force. It was found that the fuze would arm on setback but would not arm in the drop test.

14-11 FAULT TREE ANALYSIS

One of the important functions of a fuze or a safing and arming device is to keep the ammunition item safe to store, handle, and use. This safety must continue after the item has been placed into use, and until it is safely separated from its launcher and no longer presents a hazard to the crew or surrounding friendly troops.

To test enough fuzes of a new design to ascertain its safety features would require so many samples that the cost would become prohibitive. To overcome this problem, a new method using

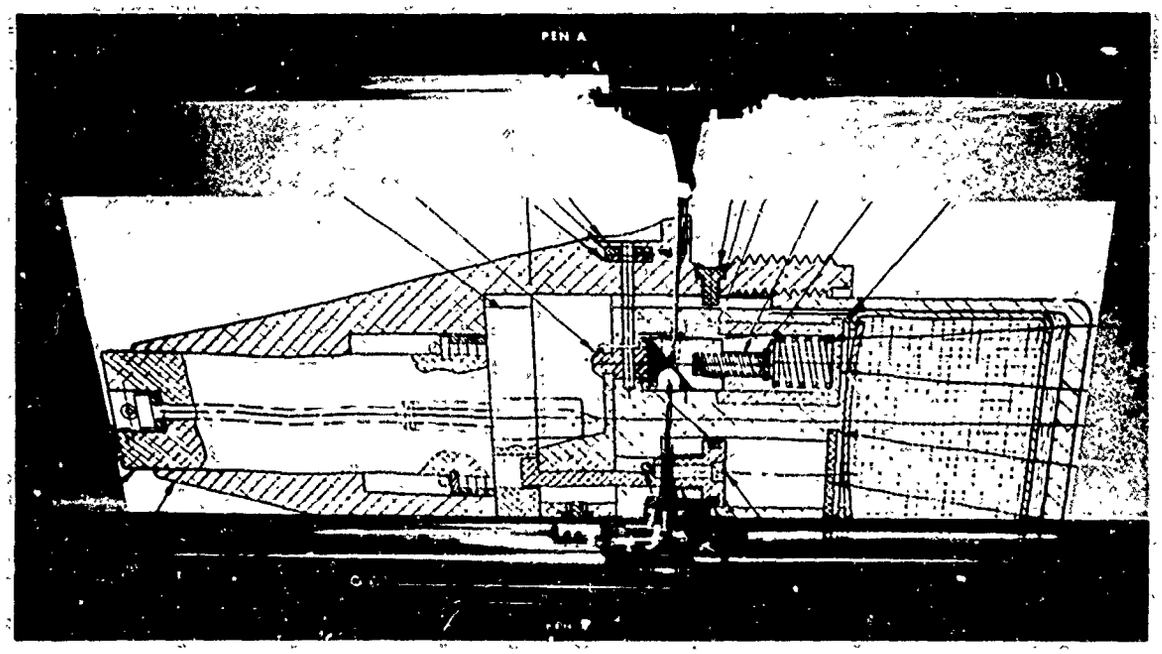

Figure 14-7. Fuze on Analog Display Board

logic diagrams, Boolean algebra, and probability values has been developed. This method, known as Fault Tree Analysis, helps to assess the safety of a fuze by pointing out the weaknesses of design, material, manufacturing processes, inspection procedures, or adverse environmental conditions[16,17].

An item may fail in several different ways. Hence, it is essential that a Fault Tree clearly states the situation to be investigated. Some typical situations are:

(1) Fuze prematurely detonates projectile during transportation and rough handling.

(2) Safing and arming device detonates missile before minimum safe distance down range.

(3) Fuze prematurely detonates rocket in launcher.

Having selected the situation to be investigated, the Fault Tree is constructed in diagrammatic form based on the proposition that a logical statement is either true or false, but never partially true or partially false. These logical statements are used to describe a condition which alone or in combination with another condition would cause an event. If several conditions, independently, can cause an event, the branch is made through an OR gate. If two or more conditions are needed to cause an event, the branch is made through an AND gate.

When the Fault Tree construction has been completed, all the contributing conditions are combined by the use of Boolean algebra. Further, each of the contributing conditions can be given a probability value of occurrence. These values can be actual numbers if sufficient data exist or the values can be hypothetical, based on engineering judgment. After the values have been assigned and properly substituted in the algebraic expression, final probability number can be determined for the hazardous condition being scrutinized.

While not the only method which can be used, the Fault Tree technique is considered to be a very effective analytical tool in assessing the safety of fuzes.

14-12 MAINTENANCE

Ideally, fuzes should be completely maintenance free. They should be so designed that they can be placed on the shelf and perform perfectly when withdrawn for use 20 years later. Every effort should be made to approach this condition to produce ammunition having optimum properties of handling, storage, shelf life, and serviceability.

Design for maintainability requires incorporation of at least the following maintenance principles[18].

(1) Design to minimize maintenance and supply requirements through attainment of optimum durability and service life of materiel.

(2) Recognition of field maintenance problems encountered in earlier designed items.

(3) Design for ease of maintenance by assuring accessibility to facilitate inspection, repair, and replacement.

(4) Consideration of field maintenance based on geographical locations and climatic conditions.

(5) Design for maximum utilization of interchangeable components.

(6) Detection of conditions which will adversely affect the conduct of maintenance operations or generate excessive maintenance and supply requirements.

(7) Design to effect maximum compatibility of maintenance operations with contemporary common tools.

(8) Evaluation for ease of packaging, carloading, and shipment.

(9) Design to enable removal of major components as individual units.

(10) Assurance that proper materials and special treatment are used for maximum resistance to deterioration.

(11) Consideration of long term storage with a minimum of periodic checks and maintenance in storage.

REFERENCES

1. J. J. McManus, "Improving Contact Reliability in Low-Level Circuits," Electro-Technology **69**, 98-101 (1962).
2. S. W. Chaikin, *Study of Effects and Control of Surface Contaminants on Electrical Materials*, Stanford Research Institute, Menlo Park, Calif., Final Report, June 10, 1961, Contract DA-36-039-SC-85274, AD-261 743.

REFERENCES (Cont'd)

3. AMCP 706-121, Engineering Design Handbook, *Packaging and Pack Engineering.*
4. MIL-P-60412, *Packaging, Packing and Marking for Shipment of Artillery Type and Rocket Fuzes, General Specification for.*
5. E. A. Schatz, "A Survey of Encapsulating Systems," Product Engineering 31, 38 (1960).
6. AMCP 706-177, Engineering Design Handbook, *Properties of Explosives of Military Interest.*
7. MIL-HDBK-212, *Gasket Materials (Nonmetallic),* Dept. of Defense, 26 September 1958.
8. A. Damusis, Ed., *Sealants,* Reinhold Publishing Corp., N.Y., N.Y., 1967.
9. M. Schwartz, *Solders and Soldering Techniques,* Diamond Ordnance Fuze Laboratories, (now U.S. Army Harry Diamond Laboratories), Report R53-57-43, Washington, D.C., 18 November 1957.
10. R. Mels and W. Roeser, *Solders and Soldering,* National Bureau of Standards, Circular 492, Washington, D.C., 28 April 1950.
11. *The Lubrication of Ammunition Fuzing Mechanisms,* Journal Article 49.0 of the JANAF Fuze Committee, May 1967, AD-829 739.
12. J. C. Howell, *Design of Fuze, PIBD, T199E6 (U),* Picatinny Arsenal, Technical Memorandum ORDBB-TE5-20, Dover, N.J., Dec. 1959 (Confidential).
13. A. G. Edwards, *A Performance Investigation of a Proposed 81mm Mortar Fuze Design by Analog Simulation Methods (U),* Picatinny Arsenal, Dover, N.J., Confidential, *in* "Tripartite Technical Co-operation Program (U)," U.S., United Kingdom, Canada, Panel 04 (Fuzes and Initiators), Minutes of Fifth Meeting, September 1965 (Secret).
14. I. A. Engle and Edward Lee, *Analog Study of M52 Fuze,* Picatinny Arsenal, Technical Memo 1776, Dover, N.J., June 1966.
15. I. A. Engle and Edward Lee, *Simulation of XM423 and XM427 Fuzes,* Picatinny Arsenal, Technical Memo 1737, Dover, N.J., June 1966.
16. W. F. Larsen, *Fault Tree Analysis,* Picatinny Arsenal, Quality Assurance Directorate, ARDIP No. 20, Dover, N.J., Aug. 1968.
17. Maxine Bohacz, et al., *A Guide to Developing Safer and More Reliable Fuzes,* Picatinny Arsenal, Technical Report 3795, Dover, N.J., Oct. 1968.
18. AMCP 706-134, Engineering Design Handbook, *Maintainability Guide for Design,* Chapter 28.

CHAPTER 15
FUZE TESTING

15-1 GENERAL

Throughout the development of a fuze, the designer submits each component to development tests to answer the question: Does this component act in the manner for which it is designed? When the prototype of the fuze is built, it is subjected to performance or proof tests in order to answer the question: Does this fuze satisfy its requirements? Since these tests often destroy the fuze and since the available number of fuzes is limited, it is necessary to apply special methods of analysis to the test data. There is a definite trend toward standardization so that special attention is given to standard tests (see Table 15-5 in par. 15-5). There are, however, many established procedures that can serve in the absence of a standard (see Journal articles, Appendix II).

15-2 PERFORMANCE TESTS

Fuzes are tested in various ways to determine whether they operate as intended, whether they are safe, and whether they withstand different environments. Performance tests include both those concerned with operation of the complete fuze and of the individual components. Common or standard tests are described and typical laboratory programs for testing fuzes during development phase or acceptance phase of the fuze design are suggested. It is necessary to include test programming in the initial planning for a fuze development project.

15-2.1 DEVELOPMENT AND ACCEPTANCE TESTS

Development tests are performed to evaluate the designer's latest effort; acceptance tests are performed to evaluate the final design and are often called approval tests or evaluation tests. Development tests seek an answer, while acceptance tests confirm it. The tests are similar, yet they differ in three respects:

(1) Development tests are applied to individual components, to modified fuzes or to the entire fuze; acceptance tests are applied to the entire fuze only. A modified fuze or a test model that lacks one or more components of the entire fuze is often constructed for development testing. Sometimes a special component is substituted for the purpose of facilitating the test of a particular fuze function or action. To test arming distance, for example, the designer may replace the explosive train by a flash charge that ignites when the arming process is completed. In acceptance tests, on the other hand, the fuze cannot be so modified. Here, the fuze is presumed to have armed when it functions at the target. A separate acceptance test is required to check the safe arming distance.

(2) Development tests are often more precise or more severe than acceptance tests. Rather than stop at the required limit, the designer prefers to test a given part until it is destroyed so as to acquire useful design data. For example most fuzes are accepted if they withstand 1750 jolts in each of three positions on a standard machine. However, the designer may profit from the knowledge that his fuze withstood 5 times that number of jolts. As another example, in the arming test mentioned above, a flash charge permits the designer to locate the distance at which the fuze became armed, not merely to determine that it armed within a certain zone. These examples show how a test can indicate the marginal point, i.e., the point where engineering judgment can be effective in specifying further refinement.

(3) Development tests are specified by the designer; acceptance tests, on the other hand, are specified by a Service Board. This arrangement permits an evaluation by an independent engineering agency. The designer will always test the complete fuze to ascertain that the modifications he has introduced do not adversely affect its overall performance. However, since judgment governs the type of tests selected and the number of samples chosen, final acceptance tests must confirm the fact that the fuze does perform as specified.

15-2.2 TEST PROGRAMMING

Before any tests are made, a test program should be set up to include appropriate tests for

each component and for the entire fuze. Each program should be adapted to the particular fuze being designed. A sample program of safety and surveillance is shown in Table 15-1. It is recommended that schedules of this sort be set at the start of a development program. Such planning will avoid wasting fuzes in overtesting and will permit sequential testing when desired. For any particular fuze design, some of these tests may be omitted while other more appropriate ones may be added. It is important that the sample size be sufficiently large that the conclusions are valid (see par. 15-6).

The order of tests must be considered carefully. Sometimes, the order is one of mere convenience; at other times, a definite order is essential. Generally prior to firing tests, a particular fuze design should be subjected to a variety of rough handling tests to insure that it is safe while being handled by proving ground personnel. It is most desirable to perform sequential tests where the same fuze is subjected first to one test, then to another. In this way, cumulative effects may be evaluated[1]. It is necessary to have extra fuzes—15 is a typical quantity—for comparison purposes. These are inserted as controls at various stages in the sequential test.

TABLE 15-1. SAFETY AND SURVEILLANCE TESTS

Test	*MIL-STD-331 Test No.*	*Typical Quantity*
Jolt	101	6*
Jumble	102	6
Five-foot drop	111	10
Forty-foot drop	103	10
Transportation vibration	104	10
Temperature and humidity	105	5
Vacuum—steam pressure	106	5
Waterproofness	108	5
Salt spray	107	2

* Sequential in 3 positions

15-2.3 COMPONENT TESTS

The performance of most components is tested by means other than firing, although firing tests are used occasionally. In addition to housing parts, components may be divided into three groups; (1) explosive elements, (2) mechanical devices that must be displaced (rotors, sliders, detents, springs), and (3) power sources that provide the energy needed to initiate the first explosive element. The tests described below are concerned with performance and simulate actual conditions satisfactorily.

15-2.3.1 Explosive Elements

Since fuzes must function, explosive components are the key parts. They are tested singly or in combination with other elements of the train. Component tests are normally divided into three parts—input, output, and train continuity—where the last one is really a combination of the other two.

For stab and percussion detonators and primers, input is simulated by dropping onto the firing pin a ball of a known weight from a measured height. Flash detonators and other flash initiated components are set off with a standard primer of the particular train. Electric detonators are initiated from test sets that simulate the characteristics—such as voltage, current, capacity, and duration—of the planned power source.

There are several explosive output tests but as yet there is no definite agreement as to which test most aptly indicates the ability of a component to transmit detonation to the next component[c]. While absolute results of these tests may be in doubt, they are a good yardstick for quality assurance and for measuring the effect of minor changes. In the sand bomb test, the detonator is set off in a prescribed fixture where it crushes sand of a specified grade. The amount of sand crushed is a measure of output (see par. 4-2.3). In the lead disk test (MIL-STD-331, Test 302), the detonator is placed on top of a specified disk (usually Grade B lead sheet, 0.1345 in. thick and 1¼ in. diameter). The size of the hole blown through the disk is a measure of output. In the steel dent test (MIL-STD-331, Test 301), the detonator is placed within a prescribed sleeve on top of a specified size steel block. The depth of the dent is a measure of output. Depths range from 0.005 to 0.100 in.

The explosive train continuity test determines whether each component in the train will be initiated and whether the final detonation will be sufficient for its purpose. During this test, the components may be assembled in line (the armed position) in either a fuze or a test fixture. In cases where different triggering actions (impact, time, graze) set off separate trains, each train must be

tested individually. Test results will be more meaningful if the actual rather than some simulated tests indicate but do not guarantee field performance. In addition to learning whether a train functions, it is often desirable, particularly when delay elements are used, to know how long it takes the fuze to function. Functioning time may be measured on an electronic counter started with an impulse from the input device and stopped by a transducer that picks up light or ionization of the output flame.

The static detonator safety test (MIL-STD-331, Test 115) determines whether the rest of the train will be set off when the detonator is initiated in the unarmed position. Results of this test are in a sense directly opposite to those of the last named test. The fuze or test fixture must be modified so that the detonator may be initiated in the safe position. A typical modification is shown in Fig. 15-1. The test is successful if no explosive part beyond the arming device chars or deforms and there has been no hazardous ejection of parts.

Typical quantities are ten for each explosive train continuity and detonator safety tests.

It may also be desirable to measure the cook-off temperature of the explosives as described in JANAF Journal Article 43.0 (see Appendix II).

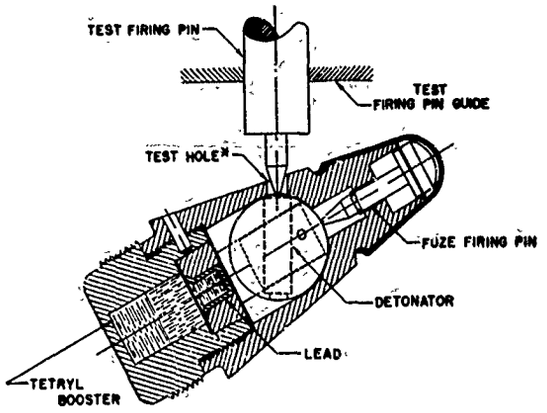

* THIS HOLE IS DRILLED IN FUZE BODY IN ORDER TO INITIATE THE DETONATOR IN THE UNARMED POSITION.

Figure 15-1. Arrangement for Detonator Safety Test

15-2.3.2 Mechanical Devices

Centrifugal or setback forces that are encountered by a fuze can be employed to move mechanical devices. These forces are simulated for test conditions by centrifuges, spin machines, air guns, and other miscellaneous devices.

A centrifuge consists of an arm or plate rotated about an axis. Its principal use is for simulation of setback. The fuze or its parts can be mounted in various positions on the arm of the centrifuge as shown in Fig. 15-2. It can be seen from Eq. 5-11 ($F_c = W_p\, r\omega^2/g$) that by rotating the centrifuge arm, a force is exerted on the part. The equation also shows that when the radius r is large, the angular rotational velocity ω must be kept small so that the forces will not exceed the physical limitations of the equipment. Many novel and valuable techniques have been applied to these centrifuges, such as: (1) optical systems to observe the part during the test, (2) slip rings to take off signals for data recording, (3) data storage systems to be carried on the rotating arm, and (4) telemetering systems using high frequency radio waves. The acceleration-time patterns may be programmed for the part. Since the centrifugal forces depend upon the radial distance to the part, that force changes if the part moves radially but not if it moves perpendicularly to the radius. Hence, by proper fixture design, the effects of axial accelerations (propulsion), lateral acceleration (steering), and rolling accelerations can be simulated and measured. Since the strength of the test device limits the size of the specimen that may be mounted, centrifuges are built in various sizes with approximate extremes as given in Table 15-2.

A spin machine is used to simulate the spinning of a fuze in flight. In this test, a fuze is mounted on an arbor and spun at the required speed. It can then be ascertained, for example, whether a rotor does not turn at the nonarm limit (say, 1500 rpm) but does turn at the arm limit (say, 2100 rpm). Measurement is by means of a light shining through the detonator hole in the rotor or by means of a probe, depending on fuze construction. The movement of other parts, such as detents, under the influence of spin can also be determined by this machine. Instrumentation similar to that used with centrifuges is employed.

Setback forces may be simulated in a drop test fixture or, more conveniently, in an air gun. The air gun is a smooth bore cannon with a high-pressure air tank attached to the breech and a long pipe extending from the muzzle. One type of air gun operates as follows: when a valve is opened, a piston with the test component attached is propelled through tube and pipe against a target. A velocity of 750 fps has been reached

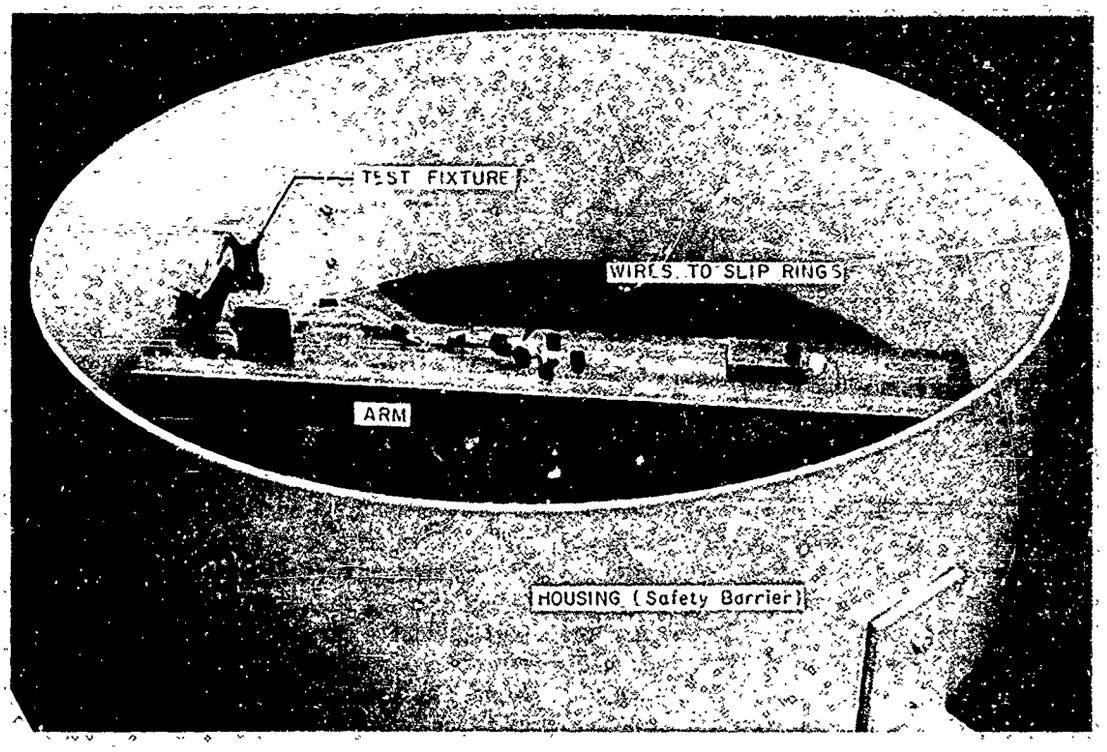

Figure 15-2. Low-g Centrifuge

TABLE 15-2. DIMENSIONS OF PRESENT DAY CENTRIFUGES

Type	*Acceleration, g*	*Specimen weight, lb*	*Arm Length, ft*
Low g	100	100	14.5
High g	60,000	1	1.5

in air guns. One advantage of both centrifuge and air gun tests over a firing test is the fact that the specimen may be examined afterwards. Auxiliary instrumentation is provided in the form of high speed cameras and strain gages. For impact tests in an air gun, the instrumentation can be greatly simplified if the specimen is mounted stationary at the target position and a simulated target fastened to the piston is shot against it.

Test quantities vary with requirements. Five to ten items are a reasonable sample size for air gun tests. If the items are not damaged in the test, they can be used repeatedly. Both air gun and centrifuge tests also lend themselves well to operability tests at extreme temperatures.

Since centrifuge and spin tests may be nondestructive, developmental fuze samples are frequently so tested before and after other testing as applicable. These tests are also used in quality assurance inspection of fuzes in production.

A shock machine covers the range of low accelerations, below those of drop tests and air guns. Fig. 15-3 shows a hydraulic shock machine—in its concrete test pit—having a range of 0 to 3000-5000 g. It is used to test graze impact sensitivity, fuze load during automatic ramming, or setback in a mortar tube. It can operate on controlled start or stop of the piston. Piston motion is controlled by a series of valves to vary the shape of the shock.

Rocket sleds, that now approach hypersonic velocities, are used for two purposes in testing fuzes and ammunition: (1) with the sled fired in the same direction as the projectile, the relative velocities of sled and projectile can be adjusted for projectile recovery in excellent condition, and (2) with opposing velocities, performance under extremely high velocity impact can be assessed.

Parachute recovery methods are useful in testing fuzes. Missile fuze systems that operate on burst height may be allowed to go through the firing sequence with subsequent parachute deployment and intact recovery. Hypersonic rockets, mortars, and bombs may be used as test vehicles for fuze components. The vehicle body

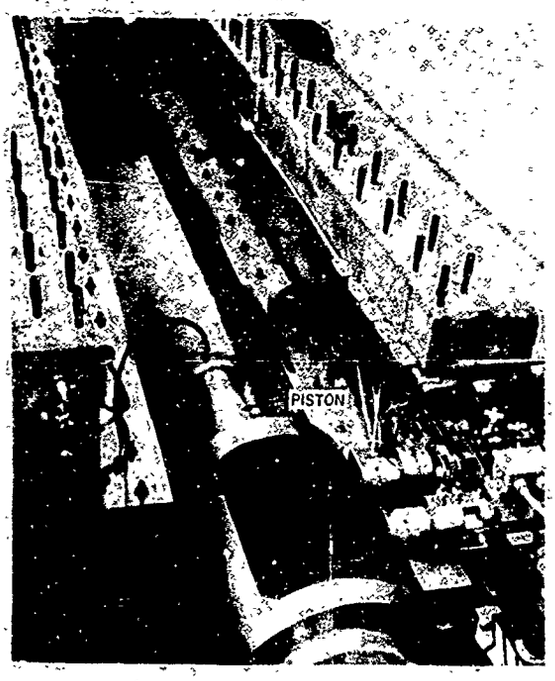

Figure 15-3. Shock Machine

contains the parachute and deployment mechanism in addition to the fuze component under test.

Telemetering in the broad sense involves the transmission of data by any means from a remote and usually inaccessible point to an accessible location[2]. Usually, telemetering refers to electrical means of acquiring and transmitting data, transmission usually being accomplished by means of an RF link from the munition to a ground station. The requirement for telemetering data from fuzes may be quite severe, as in the artillery fuze where survival of the telemetering transmitter, power source, and antenna is essential under accelerations in excess of 50,000 g during setback. A typical system meeting these requirements is shown in Fig. 15-4[3]. On the other hand, the telemetering equipment in rockets, bombs, and grenades need not be as rugged although size and weight might be critical.

Often in military applications, a simple yes or no response will provide answers that will isolate troublesome portions of the fuze in development programs. Simple modifications of the munition may give a light flash or a puff of smoke that can be detected by a human observer or by a detecting device. However, for variable data such as acceleration, strain in a member, or rotor position, conventional RF telemetering is necessary. Transducers in the device being tested convert the variable being measured into an electrical signal that is subsequently used to modulate the carrier of an RF transmitter. Modulation involves changing the amplitude, frequency, or phase of the carrier. The signal is received, amplified, and demodulated on the ground and recorded on magnetic tape or on an oscillograph for subsequent analysis.

If development tests appear to warrant telemetering, it is well to seek guidance from someone familiar with equipment and facilities of the test area being considered for use.

15-2.3.3 Power Sources

Power sources require special tests only occasionally. When the source is a mechanical transducer, such as a spring or a rotor, it is tested like any other mechanical device. Hydraulic sources may require pressure tanks or wind tunnels if the medium is air or a gas. Electric sources, as well as auxiliary electric circuit components, are tested as breadboard models in conventional ways. In all instances, the final test must establish that the power source can set off the primer, or detonator, in the particular fuze.

15-2.4 PROOF TESTS

The performance of a final design for a fuze is evaluated by actually firing a complete round containing the new fuze; this is called a proof test. Firing tests are not only a powerful check on the validity of simulated tests, but they also permit a check on performance of the complete fuze when subjected to the total environment that it will experience. The proof test is the only means of evaluating final assembly operations and possible effects of force combinations that were not apparent when individual components were subjected to single forces one at a time. Table 15-3 enumerates the type of information that can be determined by proof tests.

Proof tests have not been standardized to the same extent as other tests because they must be adapted to individual requirements that vary widely. It is, therefore, not possible to describe individual tests in detail. Test conditions, equipment, quantities, and methods of analyzing results differ from fuze to fuze.

The basic concept of the proof test is: A fuze

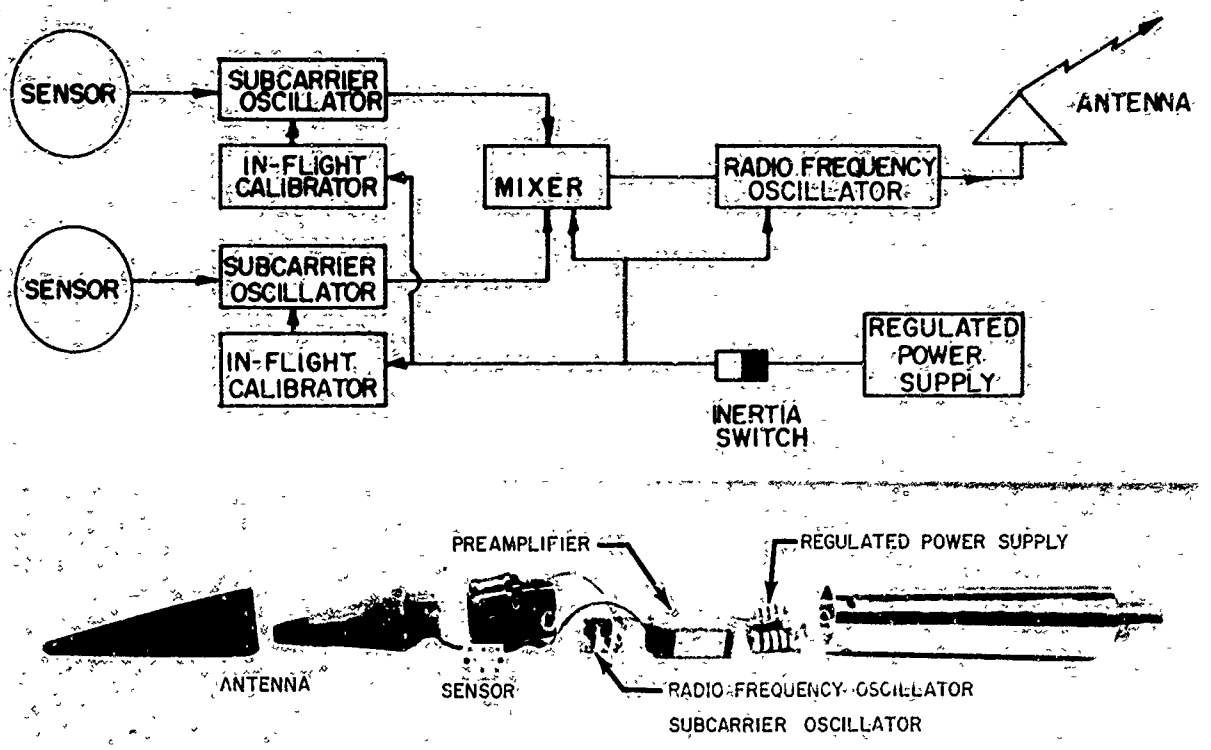

Figure 15-4. Typical VHF High-g Telemetry System

TABLE 15-3. TYPICAL FIELD PROOF TESTS

ARMING DETAILS*

Arming distance
Arming time
Parachute delivery

FUNCTIONING DETAILS*

Dependent upon Target	*Independent of Target*
Normal or oblique impact	Clockwork
Penetration	Fluid flow
Delay	Pressure (for mines)
Graze action	Self-destruction
Sensing (for proximity fuzes)	Rain and snow
Manual disturbance	

* Proof tests should be made both at ambient and extreme temperatures.

is tested at all conditions similar to those under which it is expected to perform.

15-3 SAFETY TESTS

Safety tests, designed to investigate the requirements for safe handling as given in par. 9-2.2, are of two types:

(1) Destructive tests are those where operability is not required. Here, the design is acceptable even though the fuze may be damaged provided no explosive element past the safety device functions, the fuze does not arm, and it is safe to dispose of thereafter;

(2) Nondestructive tests are those where operability is required. Here, the design is acceptable only when the fuze is not harmed and "survives" the test by virtue of functioning afterward as intended. Specific tests are listed below and a suggested test program is given in par. 15-2.2.

15-3.1 DESTRUCTIVE TESTS

Drop, jolt, and jumble tests check the ruggedness of a fuze and measure the sensitivity of explosive components when subjected to severe impacts. Drop tests simulate the effects of free fall of fuzed items of ammunition during handling or transportation. It is advisable to perform tests at extreme temperatures (-65° to 160°F) in order to find out whether the materials or the components are vulnerable at these temperatures.

The *40-foot drop test* (MIL-STD-331, Test 103) simulates a severe condition that may be met during normal handling. Ammunition with live fuzes is dropped in free fall onto a steel plate

on a reinforced concrete base. The severity of drop tests is demonstrated in the acceleration-time traces reproduced in Fig. 15-5[4]. Five different striking orientations are used: nose down, base down, horizontal, axis 45° from vertical with nose down, and axis 45° from vertical with nose up. Fig. 15-6 is a photograph of a 40-foot drop tower. Not just a mere tower, a fuze drop tower requires many accessories for ammunition hoisting and observation.

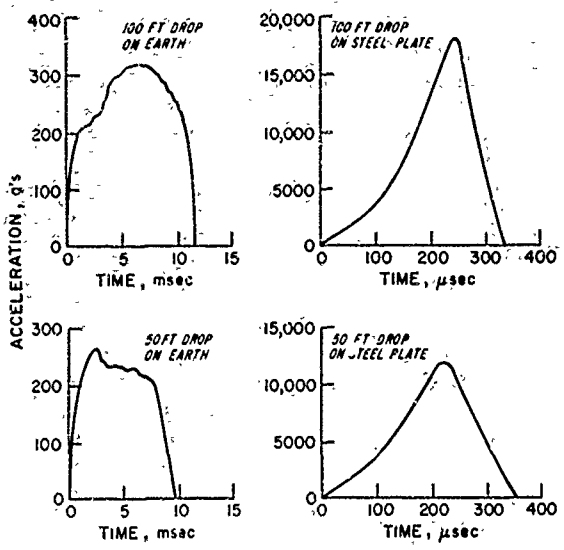

Figure 15-5. Acceleration Experienced by 81 mm Mortar Projectile Dropped Base Down

The *jolt test* (MIL-STD-331, Test 101) requires that the sample fuze be jolted or bounced 1750 times in each of three positions. This test is designed to expose the most vulnerable plane of weakness. A photograph of the appropriate test machine is shown in Fig. 15-7. During the development phase, tests are sometimes continued until destruction to gain additional design information. On the other hand, many designers require operability after both standard jolt and jumble tests.

In the *jumble test* (MIL-STD-331, Test 102), fuzes are tumbled in the appropriate machine. This test establishes the basic ruggedness of a fuze design. The machine (Fig. 15-8) consists of a wood-lined steel box which is rotated about two diagonal corners at 30 rpm.

It should be noted that shape and size of the fuze being jumbled are important factors and may cause the machine to record shocks different from those experienced by the fuze in actual use.

Aircraft may drop ammunition with unarmed fuzes for two reasons: (1) as planned (jettisoning

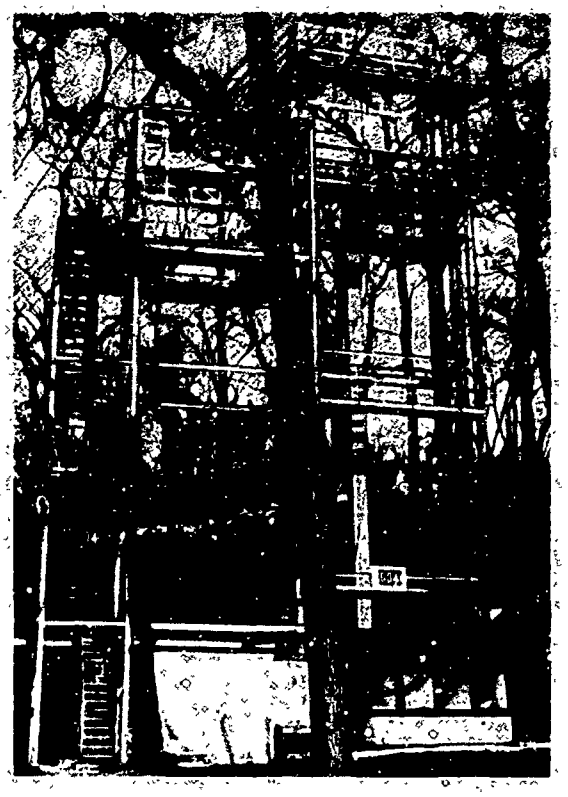

Figure 15-6. 40-ft Drop Tower

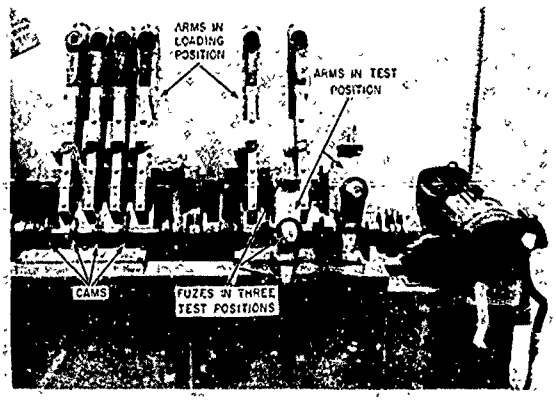

Figure 15-7. Jolt Machine

or parachute delivery), and (2) not as planned (accidental missile release during take-off or landing). Several tests have been standardized that simulate such fall from aircraft. For example, *jettison tests* may be performed in one of four ways (MIL-STD-331, Tests 201-205): (1) drop from aircraft (for munitions that are released), (2) launched from aircraft (for munitions that are fired), (3) simulated aircraft drop by firing from a ground launcher into a sand filled bin at a velocity that approximates the terminal speed of

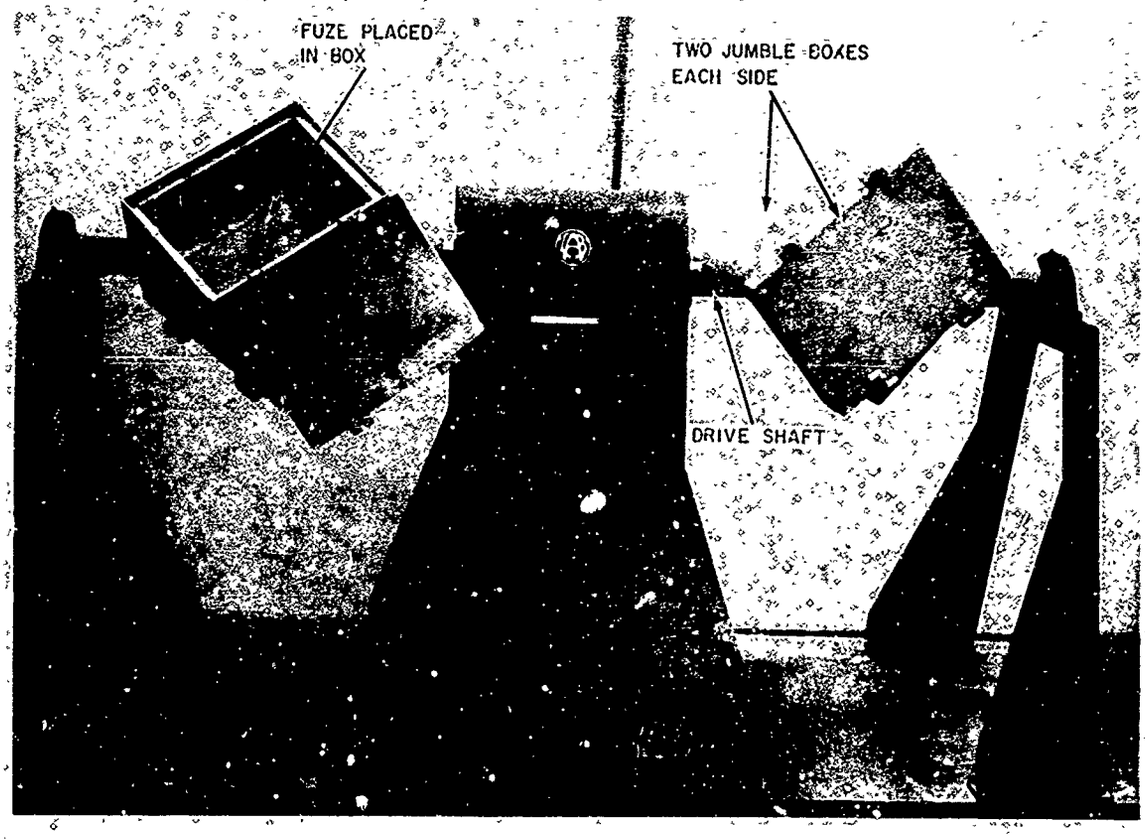

Figure 15-8. Jumble Machine

a high-altitude drop, and (4) simulated aircraft launch by firing from a ground launcher. In all cases, arming wires are left in place and the fuze must not explode after dropping. Tests like these are becoming more popular and are expected to become more applicable to all types of military items.

The *accidental release (low altitude, hard surface) test* (MIL-STD-331, Test 206) is used to determine whether fuzes assembled to munitions released from an aircraft during take off or landing will remain safe after hard-surface impact. The need for this test arises from the possibility that the malfunction of an aircraft or its release equipment (occurring during or immediately after takeoff or landing) could accidentally release or necessitate the release of munitions.

The *muzzle impact test* (MIL-STD-331, Test 207) determines whether a fuze is bore safe. This test is performed under actual conditions but with inert missiles. A target that reliably initiates the fuze is placed as close as feasible to the muzzle.

The *impact safe distance test* (MIL-STD-331, Test 208) determines the distance from the weapon within which the fuze will not function as a result of impact if free to arm. This test is performed under the same conditions as those for the muzzle impact test except that the target is placed at several positions near the minimum distance specified in design requirements. The percentages that function are determined at each position along the range. Fig. 15-9 shows a typical curve of results for a 20 mm fuze.

The *missile pull-off from aircraft test* (MIL-STD-331, Test 209) is to test the field safety during arrested landing. It is used to assure that the fuze will undergo impacts in the unarmed condition equivalent to those that might be received if the munition were to strike a hard surface after accidental release during arrested landing.

The *time-to-air burst test* (MIL-STD-331, Test 210) is an operational test used to determine the timing error of the fuze under field firing conditions. It consists of firing a time fuze, assembled to an appropriate explosive loaded projectile, set to function at a predetermined time. The time to

burst of the fuze is determined by measuring the time of flight of the projectile from the weapon to the point of burst. Some of the systems used to measure time to air burst are stop watches, electric clocks, and fuze chronographs.

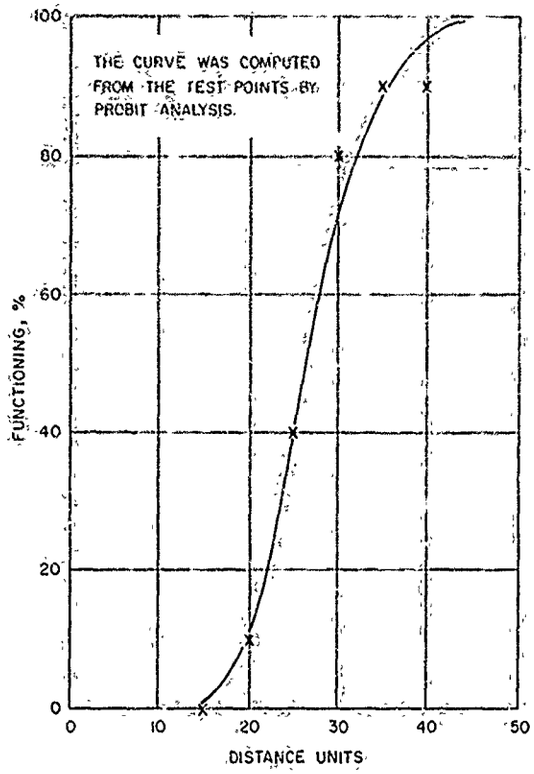

Figure 15-9. Results of Impact Safe Distance Test

15-3.2 NONDESTRUCTIVE TESTS

These tests check the permanence, ruggedness, and reliability of the fuze safety features by simulating a wide variety of actual handling and transpo ion conditions such as vibration and short drops. Some designers also require operability after jolt and jumble tests. These are described in the foregoing text. A number of tests deliberately exaggerate the conditions to which the fuze may be exposed. Often these tests are performed in sequence to make sure that cumulative effects of the tests do not weaken the fuze.

The *parachute drop test* (MIL-STD-331, Test 211) is a field test to determine whether the fuze will remain safe and operable after subjection to the forces incident to parachute delivery. It consists of dropping, from an aircraft, fuzes in packages to which parachutes are attached. Fuzes are also tested for safety in the event of a malfunctioning parachute.

The *catapult and arrested landing test* (MIL-STD-331, Test 212) is needed to assure that fuzes can withstand catapult takeoff and arrested landing forces and yet remain safe to transport, handle, and store, as well as remain in operable condition. The fuze is assembled, unarmed, in the inert-loaded munition for which it is designed or in a suitable test fixture. The test item is catapulted or accelerated to obtain the acceleration time patterns required. Each accelerated fuze is examined for evidence of unsafe conditions.

The *transportation vibration test* (MIL-STD-331, Test 104) consists of vibrating sample fuzes according to a specified schedule of frequencies, amplitudes, and durations. They are vibrated both in and out of their shipping containers. In this test, fuzes are accepted if they show reasonable wear but they are rejected if seriously damaged. Engineering judgment and laboratory or field testing determine whether borderline damage is likely to affect safety or operability.

The equipment for this test consists of a spring-mounted table having an adjustable, unbalanced, rotating weight attached to the underside. A remote control system regulates the vertical motion of the table by shifting the rotating weights and manual control of the motor speed regulates the frequency of vibration. A photograph of the transportation-vibration machine is shown in Fig. 15-10.

The *5-foot drop test* (MIL-STD-331, Test 111) simulates severe shocks encountered during accidental mishandling in transportation or service use. Fuzes (assembled to their inert-loaded carrier) are dropped 5 feet on to a concrete supported steel plate. Five different striking orientations are used: (1) nose down, (2) base down, (3) horizontal, (4) axis 45° from vertical, nose down, and (5) axis 45° from vertical, base down. The 5-foot drop test differs from the 40-foot drop test which is solely a destructive test at an extreme condition. After the 5-foot drop test, the fuze must perform as intended.

The *rough handling test* (MIL-STD-331, Test 114) simulates rough handling which may be encountered by fuzes during transportation and handling while in the standard packaged condition. The test consists of subjecting the packaged fuzes to vibration, free fall drops, and recurring impacts.

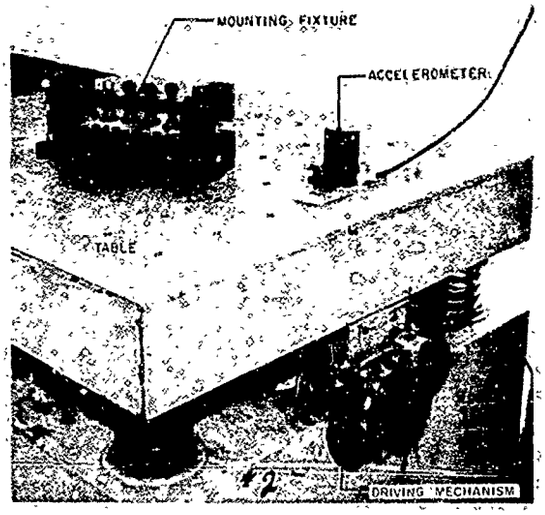

Figure 15-10. Transportation-vibration Machine

15-4 SURVEILLANCE TESTS

Surveillance is the observation, inspection, investigation, test, study, and classification of ammunition, ammunition components, and explosives in movement, storage, and use with respect to degree of serviceability and rate of deterioration. Since fuzes may be kept in storage over a number of years, they require surveillance at their place of storage to determine their serviceability at any given time. Tests to detect physical and chemical changes as well as to check operability are performed at intervals of six months or a year.

15-4.1 FACTORS AFFECTING SHELF LIFE

Fuzes are adversely affected by corrosive atmospheres and extreme heat or cold; but the two most destructive factors are moisture and fire. Protective coatings are used to decrease the formation of harmful chemical combinations. Protection against fire is best afforded if the packing cases are constructed of metal instead of wood. The designer should keep these basic concepts in mind: (1) the fuze should be as moistureproof as possible, and (2) the explosive components and the methods of loading should be such that long storage of the fuze, either alone or assembled in loaded projectiles, will not result in deterioration or in formation of sensitive chemical compounds. If hermetically sealed cans are used, many problems do not arise.

Since explosives deteriorate more rapidly and metals corrode more easily in the presence of moisture, the problems of moisture sealing and surface treatment are paramount. Corrosion is reduced by plating and sealing. Since a coating also seals in any entrapped moisture, a small amount of silica gel as an absorbent has on occasion been inserted in each fuze. In certain instances, fuzes are filled with an inert gas such as freon. Polysulfide rubbers and epoxy resins are representative of sealing materials. Each has certain qualities that make it suitable for the different components of a fuze.

Of all fuze parts, the explosive components are the least stable so that precautions should be taken to insure their operability over an extended period. It is expedient to conduct accelerated tests under simulated conditions because the storage interval is measured in years. Some indication of the deterioration can be obtained if tests are carried out at high temperature and weight loss, gas evolved, time until nitrogen oxides appear, and ignition temperature are measured.

For example, the rate of gas evolution is given in Table 15-4 for equal weights of some common explosives. These values indicate the chemical stability of the explosives from which their performance may be deduced. Lower values are preferred and all up to 5 ml are acceptable.

TABLE 15-4. VOLUME OF GAS EVOLVED IN 40 HOURS IN VACUUM AT 120°C

50/50 Amatol	4.53 ml
Tetryl	2.98
Explosive D	0.52
TNT	0.44

15-4.2 ACCELERATED ENVIRONMENT TESTS

The fuze designer should get advance information on how well his fuze will withstand the effects of storage by subjecting it to accelerated tests of salt spray, humidity, temperature, moisture, and fungus. Since long-term tests cannot be tolerated during development, severe environments are used for a short period to simulate milder environments over extended periods; hence, the tests are accelerated.

All environmental tests are performed with bare fuzes containing all of their elements. The

tests are nondestructive, i.e., the fuzes must be both safe and operable after the tests.

The *salt spray (fog) test* (MIL-STD-331, Test 107) is used to ascertain the extent to which the fuze is waterproof and corrosion resistant. The test consists of exposing bare fuzes to a salt spray atmosphere continuously for 48 hours to check operability and for 96 hours to check safety. The fuzes must be safe following the 96-hour test but both safe and operable following the 48-hour test. Many times, individual components are required to be able to pass a similar test as a quality control check on their protective coatings.

A schematic layout of the test chamber and the orientation of the fuzes to be tested is shown in Fig. 15-11.

The *standard temperature and humidity test* (MIL-STD-331, Test 105) is considered to be best for use during development of fuzes. The test involves exposing bare fuzes to two identical 14-day cycles for a total of 28 days. During these periods, fuzes are heated to 160°F and then cooled to -65°F nine times. A relative humidity of 95 percent at the high temperatures is used to accelerate the damage. Static and operational tests under field conditions are used to determine whether the fuze withstood the test.

Fig. 15-12 shows average heating and cooling characteristics of fuzes subjected to the temperature and humidity test cycle.

The *extreme temperature storage test* (MIL-STD-331, Test 112) is used to check the ability of fuzes to withstand prolonged storage at extreme temperatures. The test consists of placing the fuzes in a temperature chamber at -65°F for 28 days, followed by exposure at 160°F for an additional 28 days.

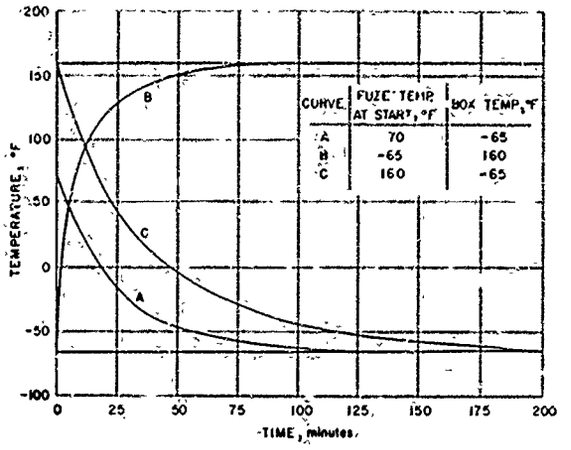

Figure 15-12. Cooling and Heating Curves of Fuzes Subjected to the Temperature and Humidity Test

The *vacuum-steam-pressure test* (MIL-STD-331, Test 106) simulates tropical climates. It is especially important for fuzes that contain electrical components. The test has been found to be the equivalent of about eight months storage in the Pacific. Each sample fuze is exposed to 1000 consecutive, 15-minute cycles in a vacuum-steam-pressure chamber. Fig. 15-13 shows a typical installation.

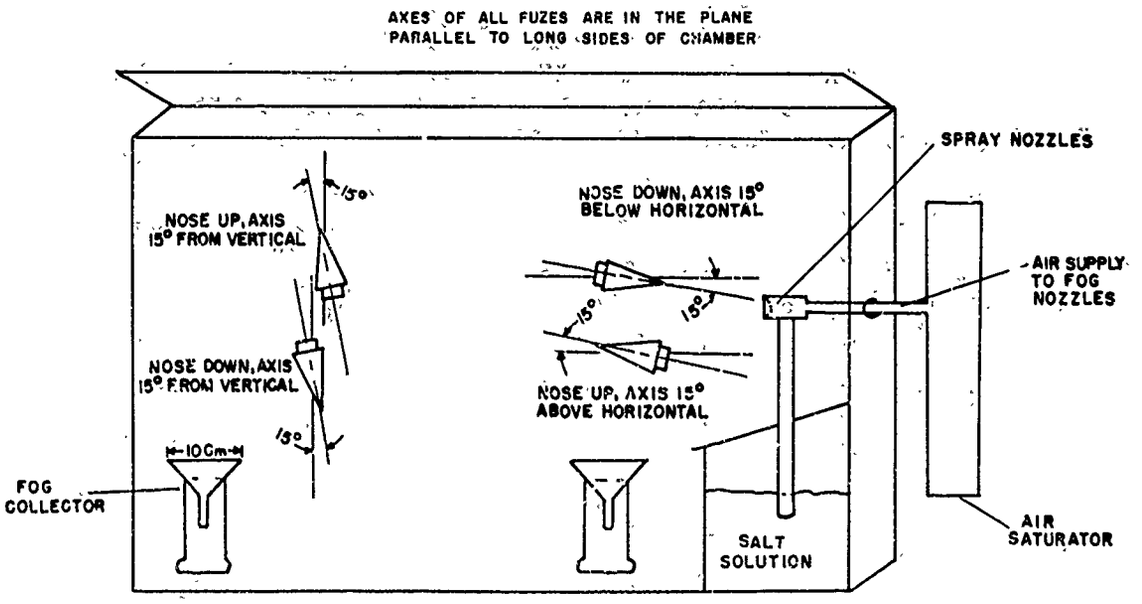

Figure 15-11. Layout of Salt Spray (Fog) Chamber

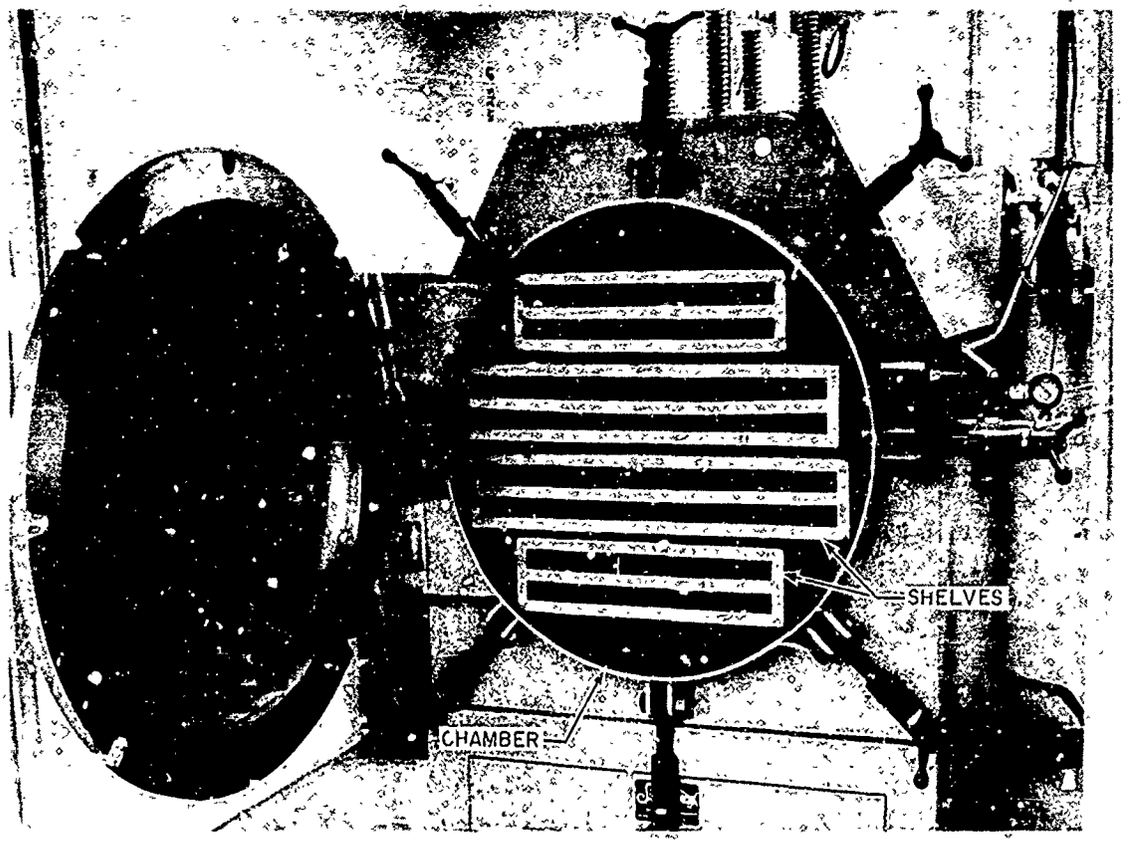

Figure 15-13. Vacuum Steam Pressure Chamber

In the *waterproofness test* (MIL-STD-331, Test 108), fuzes are immersed in water to determine their ability to withstand water penetration. After soaking for one hour in water containing a fluorescent dye, they are examined under ultraviolet light for evidence of moisture.

The *rain exposure test* (MIL-STD-331, Test 109) is intended to simulate field operations to which the fuze might be subjected during storage in rainy weather. The test consists of placing bare fuzes in a test chamber where a water distribution system, generally simulating rainfall, causes droplets to fall upon the test fuzes.

The *fungus resistance test* (MIL-STD-331, Test 110) consists of exposing bare fuzes inoculated with fungi to conditions conducive to fungus growth to determine if fuze performance is adversely affected by this environment. The appearance of fungi on the fuze is not in itself a cause for rejection, unless the growth could conceivably interfere with the safety and operability of the fuze. In this respect, this test differs from tests designed to evaluate fungus resistance properties as such.

The *thermal shock test* (MIL-STD-331, Test 113) consists of subjecting the fuze to thermal shocks (three hot and three cold) between the temperatures of −65° and 160°F within 2 hours to determine whether the fuzes will withstand the effects of sudden changes in temperature.

In addition to these more common tests, the fuze may be subjected to other environmental conditions that it may encounter; e.g., the cold and dryness of the polar regions and the low-pressure, cold air streams at high altitude. Procedures are available to test effects of sand and dust, solar radiation, low pressure, and sensitivity of the fuze to rainfall[5]. A number of rain simulation techniques have been developed[6]; a description of a simulated rain field test facility follows[7].

A simulated rain field (located at Holloman Air Force Base, Alamogordo, New Mexico) has been successfully used in testing for rain sensitivity and erosion of point-detonating fuzes. Functioning of various standard PD fuzes (not desensitized against rain functioning) has been induced by firing the fuzes from cannon or by

transporting the fuzes on rocket-propelled sleds through the simulated rain field. Velocities from 1500 to 2700 ft/sec appear to be the critical range for fuze functioning. Functioning at higher velocities can also be realized, however, approximately 3000 ft/sec seems to be the limit for most present day artillery munitions requiring point-detonating fuzing. A typical rain field is created by placing water spray nozzles parallel to the line of fire or parallel to the rocket sled rail at a suitable height and angle. Water is supplied to the nozzles at the pressure which will produce the desired amount and size of water droplets. Availability of water in sufficient volume and pressure is critical. The density of large rain drops (greater than 4 mm diameter) in simulated rain should be several times greater than that of a typical heavy tropical rain so that a correspondingly greater range will be simulated by a practical distance of rain facility. For example, rain produced by a test facility of 1200 ft in length should be 5 times greater in density of rain drops in order to simulate a natural rain shower of approximately 6000 ft of depth.

In both cases, the probability of impacting a similar number of drops of equivalent size would be approximately the same.

15-5 MILITARY STANDARDS AND SPECIFICATIONS

Standard tests and specifications are essential for efficient operation, intelligent design, and successful mass production. They permit uniform evaluation and promote interchangeability. Military Standard Tests have been established for all military items and the tests in MIL-STD-331 contain the bulk of the information on fuze tests.

In addition, there is for each service fuze a Military Specification that describes it fully. Typical headings of a fuze specification include name, purpose, description, requirements, related specifications, handling or safety precautions, and assembly drawings.

A series of Military Standards covering pertinent technical knowledge has been developed jointly by the Army, Navy, and Air Force. Some of these Standards and Specifications list materials and components used in fuzes, and suggest methods for testing, sampling, and packaging. The Military Standards for fuzes are tests for checking both safety features, and operation of fuzes and fuze components. It is the purpose of the safety tests to detect unsafe conditions and to make sure that fuzes will not break, deform, arm, or become otherwise dangerous to handle or use. It is the purpose of the operation tests to determine whether a fuze operates satisfactorily during and after a given set of conditions, and to make sure that fuzes arm, penetrate targets, destroy themselves, and otherwise function as intended.

MIL-STD tests on fuzes are divided into three main categories (1) Laboratory, given the 100 series of test numbers (2) Field, given the 200 series of test numbers; and (3) Explosive Component, given the 300 series of test numbers. In addition to these portions of MIL-STD-331, there are three additional Military Standards that apply to fuzes. MIL-STD-320 covers terminology, dimensions, and materials of explosive components used in fuzes; MIL-STD-322 covers the evaluation of electrically initiated explosive devices that are used in fuzes; and a MIL-STD not yet numbered covers fuze threads and contours for artillery and mortar ammunition[8]. All of the pertinent MIL-STD tests that apply to fuzes are listed in Table 15-5.

MIL-STD tests are not usually specified unless they serve a definite purpose. The selection of tests for application in a specific case requires engineering judgment. In no case should tests be applied indiscriminately without due consideration as to necessity and costs involved. The fuze tests are grouped together for convenience, but not with the intent that all should apply to every development or production. On the other hand, these tests are standards. Once a particular test has been prescribed, it is mandatory that it be performed precisely as specified without exception or deviation.

Occasionally during development, certain tests are conducted on fuzes where deviations from the MIL-STD's are required. If this is the case, when the test is reported, the deviations should be sufficiently described in order to permit another person to repeat this test.

15-6 ANALYSIS OF DATA

To make certain that his conclusions are valid, the fuze designer employs statistical procedures. Such procedures have been developed from the first step of selecting a sample to the final inference of future performance.

TABLE 15-5. MILITARY STANDARDS FOR FUZES

1. MIL-STD-331, *Fuze and Fuze Components, Environmental and Performance Tests For*, 10 January 1966.

Test No.	*Title*	*Superseded MIL-STD Nos.*	*Date*
	Class 100, Laboratory Tests		
101	Jolt	300, 350	6 July 1951
102	Jumble	301, 351	6 July 1951
103	40-foot Drop	302, 352	6 July 1951
104	Transportation Vibration	303	22 July 1963
		353	15 October 1963
105	Temperature Humidity	304,	6 July 1951
		354	27 March 1952
106	Vacuum Steam Pressure	305,	26 March 1952
		355	13 April 1953
107	Salt Spray (Fog)	306,	27 March 1952
		356	13 April 1953
108	Waterproofness	314	20 September 1954
109	Rain Test (Exposed Fuze Storage)	323	5 June 1953
110	Fungus Resistance	324	12 June 1963
111	5-foot Drop	325,	30 September 1963
		358	17 November 1958
112	Extreme Temperature Storage	326	7 October 1963
113	Thermal Shock	327	11 October 1963
114	Rough Handling (Packaged)	328	15 October 1963
115	Static Detonator Safety	315	29 November 1954
	Class 200, Field Tests		
201	Jettison (Aircraft Safe Drop) (Fuzes)	307	17 November 1958
202	Jettison (Simulated Aircraft Safe Firing, From Ground Launcher) (Rocket Type)	308	4 August 1953
203	Jettison (Simulated Aircraft Safe Drop, From Ground Launcher)	309	5 August 1953
204	Jettison (Aircraft Safe Firing) (Rocket Type)	310	5 August 1953

TABLE 15-5. MILITARY STANDARDS FOR FUZES (Cont'd)

Test No.	Title	Superseded MIL-STD Nos.	Date
	Class 200, Field Tests (Cont'd)		
205	Jettison (Aircraft Safe Drop) (Fuze Systems)	321	1 September 1959
206	Accidental Release (Low Altitude, Hard Surface)	311	4 August 1953
207	Muzzle Impact Safety (Projectile)	312	15 January 1954
208	Impact Safety Distance (Projectile)	313	15 January 1954
209	Missile Pull-off from Aircraft on Arrested Landing (Ground Launcher Simulated)	318	6 February 1959
210	Time-to-air Burst (Projectile Time)	319	20 May 1959
211	Field Parachute Drop	329	4 November 1963
212	Catapult and Arrested Landing	330	7 November 1963
	Class 300, Explosive Components Tests		
301	Detonator Output Measurement by Steel Dent	316	23 November 1961
302	Detonator Output Measurement by Lead Disc	317	17 December 1959

2. MIL-STD-320, *Terminology, Dimensions, and Materials of Explosive Components, For Use in Fuzes*, 2 July 1962.

3. MIL-STD-322, *Basic Evaluation for Use in Development of Electrically Initiated Explosive Components for Use in Fuzes*, 15 October 1962.

4. MIL-STD- ; *Fuze Thread, Fuze Contour and Projectile Cavity Designs for Artillery and Mortar Ammunition*. (Under preparation at present—use ABCA-Army-STD-101A during interim.)

It is important that all variables be considered when analyzing test results. While the important variables may be obvious, care must be taken not to overlook any critical parameters. Often a check list is helpful for this purpose.

Fuzes are manufactured in huge lots from which only a few are chosen to be tested. These constitute a "sample" that must be selected carefully. Standard statistical methods are available to make sure that samples are selected "at random" to represent the lot faithfully. If the sample is large, its behavior under test will conform closely with that of the original lot. However, the sample size has practical limitations based on costs of procuring fuzes and running tests, particularly so because many tests are destructive so that each fuze can be tested only once.

Realizing the importance of considering all aspects of evaluation, the fuze designer is particularly concerned with the peculiarities arising from fuze testing, with sampling procedures, and

with data analysis. Analysis of variable data differs from that of yes-or-no data and safety analysis is separated from emphasis.

The development of fuzes is complicated by the fact that the only completely reliable test is the proof test; i.e. testing the fuze in the munition for which it was designed but under simulated combat conditions. Since proof testing usually destroys and certainly damages the fuze, the causes of malfunctions can not be reliably found by examination. Thus fuze criteria have to be determined by statistical inference. Economy requires that a small sample be tested, but confidence in a high reliability cannot be assured if the test sample is too small. Since the principles of statistics make it possible to attribute a certain degree of confidence to the results obtained with a sample of given size, the designer can determine what compromise between accuracy and economy must be adopted in his particular case. In laboratory tests, it is possible to measure the parameters of the fuze arming mechanism as a continuous variable. On the other hand, it is possible to measure those of the fuze functioning mechanism only for quantal response (yes or no, fire or misfire). Even though the data from these two types of test must be treated differently, the conclusions may be drawn in the same manner.

Since test data exhibit dispersion or scatter, nearly all measurements have a deviation from the average value. Thus there are at least two important qualifying terms about a set of data, namely, the average value or arithmetic mean, and the standard deviation σ defined as the root mean square of the deviations. The first indicates the central value of the data and the second the spread around that value. Further, when applying the average sample measurement to the lot from which the sample was chosen, the designer must speak only of a probable value of the measured parameter. Then from the standard deviation of the sample value and from the sample size, this probable value is qualified by a statement of confidence in its correctness.

The concepts of random sampling, frequency distributions, measures of reliability, statistical significance, and practical significance should all become part of the designer's working vocabulary so that, at the very minimum, he can recognize those situations where a professional statistician is required. The subject of experimental statistics aimed specifically toward military applications is the subject of other handbooks[9-13].

REFERENCES

a-t Lettered references are listed at the end of this handbook.

1. *Combined Environments Testing*, Journal Article 53.0 of the JANAF Fuze Committee, 12 April 1968, AD-835 813.
2. P. A. Borden and W. J. Mayo-Wells, *Telemetering Systems*, Reinhold Publishing Corporation, N.Y., 1959.
3. W. H. Mermagen et al., *VHF and UHF High-G Telemetry Instrumentation for HARP Vehicles*, U.S. Army Ballistic Research Laboratories, Memorandum Report 1768, Aberdeen Proving Ground, Md., May 1966.
4. Edward N. Dean, *Accelerometer and Drop Test Studies and Recommendations for Revision of MIL-STD-302*, Rheem Mfg. Co., N.Y., Report R-159-19, 30 September 1955.
5. MIL-E-5272B, *Environmental Testing, Aeronautical and Associated Equipment, General Specification for*, Dept. of Defense, 5 June 1957.
6. *A Rain Survey of Rain Simulation Techniques*, Journal Article 52.0 of the JANAF Fuze Committee, 3 May 1967, AD-834 086.
7. M. C. Reynolds, *Rain Measurement and Simulation for Supersonic Erosion Studies*, Sandia Corp., Albuquerque, N.M., Feb. 1962.
8. ABCA-Army-STD-101A, *Standardization of 2" Fuze Holes and Fuze Contours for Artillery Projectiles 75 mm and Larger in Caliber, including 81 mm, 4.2" and 107 mm Mortars*, American-British-Canadian-Australian Armies Standardization Program, 5 April 1966.
9. AMCP 706-110, Engineering Design Handbook, *Experimental Statistics, Section 1 Basic Concepts and Analysis of Measurement Data.*
10. AMCP 706-111, Engineering Design Handbook, *Experimental Statistics, Section 2, Analysis of Enumerative and Classificatory Data.*
11. AMCP 706-112, Engineering Design Handbook, *Experimental Statistics, Section 3, Planning and Analysis of Comparative Experiments.*
12. AMCP 706-113, Engineering Design Handbook, *Experimental Statistics, Section 4, Special Topics.*
13. AMCP 706-114, Engineering Design Handbook, *Experimental Statistics, Section 5, Tables.*

GLOSSARY

This Glossary is principally an excerpt of *Nomenclature and Definitions in the Ammunition Area*, MIL-STD-444, Change 2, 9 July 1964. Definitions are often abbreviated and non-fuze terms are not included.

Actuator—An explosive device that produces gas at high pressure in short periods of time into a confined volume for the purpose of doing work. Dimple motors, bellows motors, and switches are examples of actuators.

Aligned—Said of an explosive train when arranged in such order that the detonation wave can propagate as required for functioning.

Ammunition—A generic term for munition including all materials thrown or used against an enemy. Items of ammunition are explosive or pyrotechnic devices used mainly to inflict damage upon military objectives but also used for such purposes as illuminating, signaling, demolishing, or operating mechanisms.

Angle of Entry—The acute angle between the tangent to the trajectory and the perpendicular to the target surface. It is the complement of the angle of impact. Also called angle of obliquity and angle of incidence.

Angle of Impact—The acute angle between the tangent to the trajectory and the target plane. It is the complement of the angle of entry.

Angle of Incidence—*See* **Angle of Entry.**

Angle of Obliquity—*See* **Angle of Entry.**

Antiremoval Device—A device attached to a land mine to protect it against removal.

Armed—The condition of a fuze normally required to permit functioning.

Arming—The changing from a safe condition to a state of readiness for functioning. Arming pertains to safety and is one of the two principal actions of a fuze (the other is functioning).

Arming Delay—*See* **Delay, Arming.**

Arming Pin or Wire—*See* **Pin, Arming.**

Arming Range—The distance from a weapon or launching point at which a fuze is expected to become armed. Also called safe arming distance.

Arming Vane—*See* **Vane, Arming.**

Black Powder (BP)—A low explosive consisting of an intimate mixture of potassium nitrate or sodium nitrate charcoal and sulphur. It is easily ignited and is friction sensitive. Formerly extensively used as a propellant, but now its military use is almost exclusively in propellant igniters and primers, in fuzes to give short delay, in powder train time fuzes, in blank ammunition, and as spotting charges.

Boobytrap—An explosive charge usually concealed and set to explode when an unsuspecting person touches off its firing mechanism as by stepping upon, lifting, or moving a harmless looking object.

Booster—An assembly of metal parts and explosive charge provided to augment the explosive components of a fuze to cause detonation of the main explosive charge of the ammunition. It may be an integral part of the fuze. (This term is often used as an abbreviation for booster charge.)

Booster Charge—*1.* The explosive charge contained in a booster. It must be sufficiently sensitive to be actuated by the small explosive elements in the fuze and powerful enough to cause detonation of the main explosive filling. *2.* The amount or type of explosive used to reliably detonate the bursting charge of ammunition.

Bore Riding Pin—*See* **Pin, Bore Riding.**

Bore Safety—*See* **Fuze, Bore Safe.**

Brisance—The ability of an explosive to shatter the medium which confines it; the shattering effect shown by an explosive.

Burster—An explosive element used in chemical ammunition to open the container and disperse the contents.

Bursting Charge—The main explosive charge in a mine, bomb, projectile, or the like that breaks the casing and produces fragmentation or demolition. It is the pay load.

Committed—The condition of a fuze in which the arming process has reached the point from which arming will continue to completion even though the arming forces cease.

Cook-off—The deflagration or detonation of ammunition by the absorption of heat from its environment. Usually it consists of the accidental and spontaneous discharge of, or explosion in, a gun or firearm caused by an overheated chamber or barrel igniting a fuze, propellant charge, or bursting charge.

Cord, Detonating—A flexible fabric tube containing a filler of high explosive intended to be initiated by a blasting cap or electric detonator.

Creep—The forward motion of fuze parts relative to the missile that is caused by deceleration of the missile during flight. Also called creep action.

Deflagration—A very rapid combustion sometimes accompanied by flame, sparks, or spattering of burning particles. A deflagration, although classed as an explosion, generally implies the burning of a substance with self-contained oxygen so that the reaction zone advances into the unreacted material at less than the velocity of sound in the unreacted material.

Delay—An explosive train component that introduces a controlled time delay in the functioning process.

Delay, Arming—*1.* The interval expressed in time or distance between the instant a piece of ammunition carrying a fuze is launched and the instant the fuze becomes armed. *2.* The time interval required for the arming processes to be completed in a nonlaunched piece of ammunition.

Delay, Functioning—The interval expressed in time or distance between initiation of the fuze and detonation of the bursting charge.

Destructor—A cylindrical metallic item containing explosive components for destruction of material by explosion.

Detent—A releasable element used to restrain a part before or after its motion. Detents are common in arming mechanisms.

Detonation—An exothermic chemical reaction that propagates with such rapidity that the rate of advance of the reaction zone into the unreacted material exceeds the velocity of sound in the unreacted material. The rate of advance of the reaction zone is termed detonation velocity. When this rate of advance attains such a value that it will continue without diminution through the unreacted material, it is termed the stable detonation velocity. When the detonation velocity is equal to or greater than the stable detonation velocity of the explosive, the reaction is termed a high order detonation. When it is lower, the reaction is termed a low order detonation.

Detonator—An explosive train component that can be activated by either a nonexplosive impulse such as a firing pin or by the action of a primer. In the former case it is also called initiator. It is capable of reliably initiating high order detonation in the next high explosive component of the train.

Detonator Safety—A fuze is said to have a detonator safety when functioning of the detonator cannot initiate subsequent explosive train components.

Dud—An explosive ammunition or component that has failed to explode, although detonation was intended.

Escapement—A mechanical device that regulates the rate of transmission of energy. It is normally used as a part of the clockwork in a mechanical time fuze.

Explosion—A chemical reaction or change of state which is effected in an exceedingly short time with the generation of a high temperature and generally a large quantity of gas. An explosion produces a shock wave in the surrounding medium. The term includes both detonation and deflagration.

Explosive—A substance or mixture of substances which may be made to undergo a rapid chemical change, without an outside supply of oxygen, with the liberation of large quantities of energy generally accompanied by the evolution of hot gases.

Explosive, High—*See* **High Explosive.**

Explosive, Low—*See* **Low Explosive.**

Explosive, Primary High—*See* **Primary High Explosive.**

Explosive Train—A train of combustible and explosive elements arranged in an order of decreasing sensitivity. Its function is to accomplish the controlled augmentation of a small impulse into one of suitable energy to cause the main charge of the munition to function. It may consist of primer, detonator, delay, relay, lead and booster charge, one or more of which may be either omitted or combined.

Fail Safe—Descriptive of fuze design features whereby a component failure prevents the fuze from functioning.

Firing Device—A mechanism design to detonate the main charge of explosives contained in boobytraps, mines, and demolition charges. There are several types of either metallic or nonmetallic construction: pressure, pull, release, or combination thereof.

Firing Pin—*See* **Pin, Firing.**

Functioning—The succession of normal actions from initiation of the first element to delivery

of an impulse from the last element of the explosive train. Functioning is one of the two principal actions of a fuze (the other one is arming).

Functioning Delay—*See* **Delay, Functioning.**

Fuse—An igniting or explosive device in the form of a cord, consisting of a flexible fabric tube and a core of low or high explosive. Used in blasting and demolition work, and in certain ammunition.

Fuze—A device with explosive components designed to initiate a train of fire or detonation in an item of ammunition by an action such as hydrostatic pressure, electrical energy, chemical action, impact, mechanical time, or a combination of these. Types of fuzes are distinguished by modifying terms forming part of the item name. (In some cases the explosive components may be simulated or omitted.)

Fuze, All-way—An impact fuze designed to function regardless of the direction of target impact.

Fuze, Antidisturbance—A fuze designed to become armed after impact, or after being emplaced, so that any further movement or disturbance will result in detonation.

Fuze, Bare—An unprotected and unpackaged fuze separated from its intended piece of ammunition.

Fuze, Base—A fuze installed in the base of a projectile.

Fuze, Base-detonating (BD)—A fuze, located on the base of a projectile, designed to be activated as a result of impact.

Fuze, Bore Safe—A fuze that has a means for preventing the detonator from initiating an explosion of the bursting charge while the projectile is within its launching tube.

Fuze, Command—A fuze that functions as a result of intelligence transmitted to it from a remote location by means not directly associated with its environment.

Fuze, Delay—Any impact fuze incorporating a means of delaying its action after contact with the target. Delay fuzes are classified according to the length of time of the delay. (*See also* **Fuze, Long Delay; Fuze, Medium Delay; Fuze, Short Delay;** and **Fuze, Time.**)

Fuze, Dummy—An imitation of a fuze which has the same shape, weight and center of gravity as the fuze but has no explosives or moving parts.

Fuze, Electric—A fuze which depends for its arming and functioning upon events of an electronic nature. Such a fuze does not necessarily have to be entirely electric but may contain mechanical components.

Fuze, Electric Time—A fuze in which the time from initiation of action to functioning can be controlled by setting, and is determined by electronic events.

Fuze, Hydrostatic—A fuze employed with depth bombs or depth charges to cause underwater detonation at a predetermined depth. Initiation is caused by ambient fluid pressure.

Fuze, Impact—A fuze in which the action is initiated by the force of impact. It is sometimes called a contact fuze or percussion fuze.

Fuze, Long Delay—A type of delay fuze, especially for bombs, in which the fuze section is delayed for a relatively long period of time, from minutes to days.

Fuze, Mechanical Time—A fuze which is actuated by a clocklike mechanism preset to the desired time.

Fuze, Medium Delay—A type of delay fuze, especially for bombs, in which the fuze action is delayed normally four to fifteen seconds.

Fuze, Mild Detonating—A small-diameter, continuous metal tubing having a high-explosive core. The core consists of 1 to 5 grains per foot of PETN. It is initiated by a detonator or lead.

Fuze, Nondelay—A fuze that functions as a result of inertia of firing pin (or primer) as the munition is retarded during penetration of target. The inertia causes the firing pin to strike the primer, initiating fuze action. This type of fuze is inherently slower in action (usually 250-500 μsec) than the superquick or instaneous fuze because its action depends upon deceleration (retardation) of the munition during impact with the target. Also called inertia fuze.

Fuze, Nose—A fuze for use in the forward end (nose) of a bomb or other munition. The term is not generally applied to fuzes for use in artillery projectiles, where the term point fuze is more commonly used.

Fuze, Point-detonating (PD)—A fuze which is located in the nose of a projectile and is designed to be actuated as a result of impact.

Fuze, Point-initiating (PI)—A fuze which has the target sensing element in the nose of the munition. The detonating portion of such a fuze is usually in the base.

Fuze, Proximity—A fuze wherein primary initiation occurs by sensing the pressure, distance

of an impulse from the last element of the explosive train. Functioning is one of the two principal actions of a fuze (the other one is arming).

Functioning Delay—*See* **Delay, Functioning.**

Fuse—An igniting or explosive device in the form of a cord, consisting of a flexible fabric tube and a core of low or high explosive. Used in blasting and demolition work, and in certain ammunition.

Fuze—A device with explosive components designed to initiate a train of fire or detonation in an item of ammunition by an action such as hydrostatic pressure, electrical energy, chemical action, impact, mechanical time, or a combination of these. Types of fuzes are distinguished by modifying terms forming part of the item name. (In some cases the explosive components may be simulated or omitted.)

Fuze, All-way—An impact fuze designed to function regardless of the direction of target impact.

Fuze, Antidisturbance—A fuze designed to become armed after impact, or after being emplaced, so that any further movement or disturbance will result in detonation.

Fuze, Bare—An unprotected and unpackaged fuze separated from its intended piece of ammunition.

Fuze, Base—A fuze installed in the base of a projectile.

Fuze, Base-detonating (BD)—A fuze, located on the base of a projectile, designed to be activated as a result of impact.

Fuze, Bore Safe—A fuze that has a means for preventing the detonator from initiating an explosion of the bursting charge while the projectile is within its launching tube.

Fuze, Command—A fuze that functions as a result of intelligence transmitted to it from a remote location by means not directly associated with its environment.

Fuze, Delay—Any impact fuze incorporating a means of delaying its action after contact with the target. Delay fuzes are classified according to the length of time of the delay. (*See also* **Fuze, Long Delay; Fuze, Medium Delay; Fuze, Short Delay;** and **Fuze, Time.**)

Fuze, Dummy—An imitation of a fuze which has the same shape, weight and center of gravity as the fuze but has no explosives or moving parts.

Fuze, Electric—A fuze which depends for its arming and functioning upon events of an electronic nature. Such a fuze does not necessarily have to be entirely electric but may contain mechanical components.

Fuze, Electric Time—A fuze in which the time from initiation of action to functioning can be controlled by setting, and is determined by electronic events.

Fuze, Hydrostatic—A fuze employed with depth bombs or depth charges to cause underwater detonation at a predetermined depth. Initiation is caused by ambient fluid pressure.

Fuze, Impact—A fuze in which the action is initiated by the force of impact. It is sometimes called a contact fuze or percussion fuze.

Fuze, Long Delay—A type of delay fuze, especially for bombs, in which the fuze section is delayed for a relatively long period of time, from minutes to days.

Fuze, Mechanical Time—A fuze which is actuated by a clocklike mechanism preset to the desired time.

Fuze, Medium Delay—A type of delay fuze, especially for bombs, in which the fuze action is delayed normally four to fifteen seconds.

Fuze, Mild Detonating—A small-diameter, continuous metal tubing having a high-explosive core. The core consists of 1 to 5 grains per foot of PETN. It is initiated by a detonator or lead.

Fuze, Nondelay—A fuze that functions as a result of inertia of firing pin (or primer) as the munition is retarded during penetration of target. The inertia causes the firing pin to strike the primer, initiating fuze action. This type of fuze is inherently slower in action (usually 250-500 μsec) than the superquick or instaneous fuze because its action depends upon deceleration (retardation) of the munition during impact with the target. Also called inertia fuze.

Fuze, Nose—A fuze for use in the forward end (nose) of a bomb or other munition. The term is not generally applied to fuzes for use in artillery projectiles, where the term point fuze is more commonly used.

Fuze, Point-detonating (PD)—A fuze which is located in the nose of a projectile and is designed to be actuated as a result of impact.

Fuze, Point-initiating (PI)—A fuze which has the target sensing element in the nose of the munition. The detonating portion of such a fuze is usually in the base.

Fuze, Proximity—A fuze wherein primary initiation occurs by sensing the pressure, distance

$$[illegible] \quad (10\text{-}10)$$

Terms are defined in the figure. This equation can be used for effects (1) and (2) but a_1 a_2 for effect (2). The third effect, the expansion of the spring y_{BC}, is calculated with the equation

$$[illegible] \quad (10\text{-}11)$$

where

E = Young's modulus, psi

I_A = second moment of the cross-sectional area, in.^{4}

ρ = density of the spring, lb/ft^3

t_s = spring thickness, in.

r = radius of the spring loop, ft

Note that $F = mr_{cg}\omega^2$ for the detent where r_{cg} is the radial distance to the center of gravity of the detent. Fig. 10-5 shows two extremes for the length of the detent. The ball diameter is 0.563 in. and the spring diameter is $(0.136 + 2.505)/\pi = 0.841$ in. Therefore, the length of detent extending outside of the ball is 0.139 in. The distance to the center of mass for the detent is

$$r_{cg} = \left(0.281 + 0.139 - \frac{l}{2}\right), \text{ in.} \quad (10\text{-}12)$$

and

$$y = (l - 0.139), \text{ in.} \quad (10\text{-}13)$$

where l is the length of the detent, in., and y is the radial deflection of the detent, in.

Since the detent mass is $m = \rho\, l A_p$, the force F is

$$F = \rho\, l A_p \left(0.0353 - \frac{l}{2}\right)\omega^2, \text{ lb} \quad (10\text{-}14)$$

where ρ is the density of the brass detent, lb/in.^{3}, and A_p is the cross-sectional area of the detent, in.^{2} Thus by combining Eqs. 10-10,

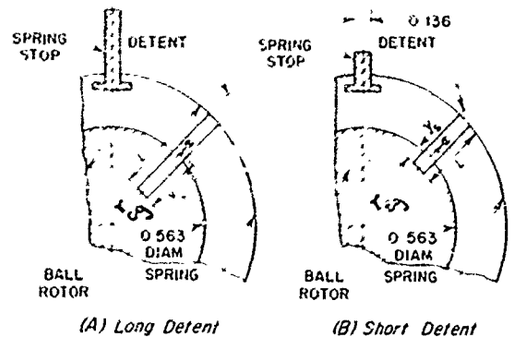

Figure 10-5. Effect of Detent Length

10-11, and 10-12, the length of the detent can be determined as a function of the spin velocity ω

$$y_{BA} + y_{BB} + y_{BC} = y(\omega) \quad (10\text{-}15)$$

The following data apply

$a_2 = 120°$

$a_1 = 60°$

$r = 0.0360$ ft

$t_s = 0.005$ in.

$\rho = 531$ slug/ft^3

$E = 18 \times 10^6$ psi

$I_A = 1.20 \times 10^{-9}$ in.^{4}

$A_p = 8.62 \times 10^{-5}$ ft^2

The expression for l as a function of ω becomes

$$l - 0.0116 = (0.736l - 10.38l^2 + 0.00155)\,\omega^2 \times 10^{-5} \quad (10\text{-}16)$$

The rotor must not arm at 2525 rpm. Hence, l can be 0.246 in. The spring has been deflected $0.432 - 0.650/2 = 0.107$ in. during assembly so that the detent will not move until the spin reaches at least 2525 rpm. What spin is required with an initial spring deflection of 0.107 in. if l is 0.246 in. long? According to Eq. 10-16, the

also propagate a detonation wave in an extremely small diameter column.

Primer—A relatively small and sensitive initial explosive train component which on being actuated initiates functioning of the explosive train and will not reliably initiate high explosive charges. In general, primers are classified in accordance with the methods of initiation; such as percussion or stab.

Primer, Percussion—Primer designed to be initiated by percussion, i.e., crushing the explosive between a blunt firing pin and an anvil.

Primer, Stab—A primer designed to be initiated by piercing it with a pointed firing pin.

Relay—An explosive train component that provides the required explosive energy to reliably function the next element in the train. It is especially applied to small charges that are initiated by a delay element and, in turn, cause the functioning of a detonator.

Safing and Arming Device—A mechanism which prevents or allows the warhead train of explosives to operate.

Self-destruction (SD)—A term descriptive of an event which occurs from fuze action without outside stimulus, when provided for in the design, by which the fuze effects munition destruction after flight to a range greater than that of the target.

Setback—The relative rearward movement of component parts in a munition or fuze undergoing forward accelerations during its launching. These movements, and the setback force which causes them, are used to promote events which participate in the arming and eventual functioning of the fuze.

Shear Pin—A pin or wire provided in a fuze design to hold parts in a fixed relationship until forces are exerted on one or more of the parts which cause shearing of the pin or wire.

Shelf Life—The storage time during which an item remains serviceable.

Shutter—*See* Interrupter.

Signature—The identifying characteristics peculiar to each type of target which enable fuzes to sense and differentiate targets.

Spin—The rotation of a munition about its longitudinal axis to provide stability during flight.

Spin Safe—Said of a fuze that is safe when experiencing a rotation equivalent to that attained during flight; thus, other forces are necessary to arm the fuze.

Squib—A small explosive device, similar in appearance to a detonator, but loaded with low explosive, so that its output is primarily heat (flash). Usually electrically initiated, and provided to initiate action of pyrotechnic devices.

Unarmed—The condition of a fuze (or other firing device) in which the necessary steps to put in condition to function have not taken place. It is the condition of the fuze when it is safe for handling, storage, and transportation.

Vane, Arming—A metallic item designed for attachment to the fuze mechanism of a bomb. The vane arms the fuze through action of the air stream created by falling of the bomb.

Warhead—That portion of a rocket or guided missile designed to contain the load which the vehicle is to deliver. It may be empty or contain high explosives, chemicals, instruments, or inert materials. It may include booster, fuze(s), and burster.

Windshield—A rounded or pointed hollow cup added to the nose of a projectile to improve streamlining. Also called a false ogive or ballistic cap.

GENERAL REFERENCES

It is assumed that the reader has a general knowledge of military ammunition. For this reason, the basic elements of ammunition are not treated in this handbook. Such information is covered in References *a* and *b*. The fuze explosive train, of key importance in fuze design, is covered in Chapter 4, and, in greater depth, in Reference *c*. Military Standards on fuze testing, References *d*, *e*, and *f*, are discussed in detail in Chapter 14. The set on *Information Pertaining to Fuzes*, References *g* to *m*, is a series of volumes that covers useful information on fuzes and fuze development, as well as historical information.

Various subjects on fuze design have been grouped in a collection of Journal Articles, Reference *n*. Individual citations are listed in Appendix II. The fuze catalog, Reference *o*, is a descriptive listing of all fuzes. Note that Reference *j* and *l* contain a more recent, although less detailed, listing of Army components and fuzes. All aspects of proximity fuzes are discussed in the classified handbooks, References *p* to *t*.

Note that specific references used for the material discussed in this handbook are listed at the end of each chapter.

a. T. C. Ohart, *Elements of Ammunition*, John Wiley and Sons, Inc., N.Y., 1946.

Discusses the basic elements involved in the design and development of ammunition.

b. TM 9-1900, *Ammunition General*, Dept. of Army, June 1956.

Contains basic information and illustrations on types and identification of ammunition (under revision as TM 9-1300-200).

c. AMCP 706-179, Engineering Design Handbook, *Explosive Trains*.

Contains the principles and factors applicable to the design of the various elements of explosive trains.

d. MIL-STD-331, *Fuze and Fuze Components, Environmental and Performance Tests For*, 10 January 1966.

Specifies the environmental and performance tests for use in the development and production of fuzes and fuze components.

e. MIL-STD-320, *Terminology, Dimensions and Materials of Explosive Components for Use in Fuzes*, July 1962.

Establishes terminology, dimensions, and preferred structural materials for explosive components.

f. MIL-STD-322, *Basic Evaluation Test for Use in Development of Electrically Initiated Explosive Components for Use in Fuzes*, 15 October 1962.

Provides a uniform evaluation of input, output, and environmental response of initiated explosive elements prior to their use in military items.

g. S. Odierno, *Information Pertaining to Fuzes*, Volume I, *Mechanical and Electronic Time Fuzes (U)*, Picatinny Arsenal, Dover, N.J., 15 August 1963, AD-355 052 (Confidential).

Catalogs the characteristics of artillery time fuzes.

h. S. Odierno, *Information Pertaining to Fuzes*, Volume II, *Propelling Charges*, Picatinny Arsenal, Dover, N.J., 22 November 1963, AD-451 449.

Catalogs the characteristics of propelling charges for ammunition.

i. S. Odierno, *Information Pertaining to Fuzes*, Volume III, *Artillery, Armor Defeat and Mortar Fuzes; PD, BD, PIBD and Time (Pyrotechnic Type) (U)*, Picatinny Arsenal, Dover, N.J., 1 March 1964, AD-355 053 (Confidential).

Catalogs the characteristics of fuzes for artillery and mortar projectiles.

j. S. Odierno, *Information Pertaining to Fuzes*, Volume IV, *Explosive Components*, Picatinny Arsenal, Dover, N.J., September 1964, AD-451 450.

Catalogs the characteristics of explosive components used in fuzes and of die sizes for booster pellets.

k. S. Odierno, *Information Pertaining to Fuzes*, Volume V, *Fuze Safing Philosophy*, Picatinny Arsenal, Dover, N.J., April 1965, AD-456 253.

Describes methods for establishing realistic safety and reliability goals for fuzes.

l. S. Odierno, *Information Pertaining to Fuzes*, Volume VI, *Encyclopedia of U.S. Army Fuzes (U)*, Picatinny Arsenal, Dover, N.J., January 1966, AD-371 076L (Confidential).

Tabulates the characteristics of all Army fuzes.

m. S. Odierno, *Information Pertaining to Fuzes*, Volume VII, *Fuze Design Testing Techniques*, Picatinny Arsenal, Dover, N.J., November 1966, AD-801 678L.

Describes and reviews laboratory and field tests (MIL-STD-331) and the JANAF Journal articles on fuzes.

n. *JANAF Fuze Committee Journal Articles* (see Appendix II).

Contains at present 53 articles covering various subjects dealing with fuzes.

o. Gunther Cohn, *Army, Navy, and Air Force Fuze Catalog (U)*, The Franklin Institute, Report F-A2238, Philadelphia, Pa., March 1959, and Supplement F-A2238-1, November 1959, AD-305 024 and AD-313 702 (Confidential).

Compiles military and technical data on all standard and developmental fuzes and fuze explosive components.

p. AMCP 706-211 (C), Engineering Design Handbook, *Fuzes, Proximity, Electrical, Part One (U)*.

Introduces the various types of electrical fuze and presents basic philosophies involved in fuze design

q. AMCP 706-212 (S), Engineering Design Handbook, *Fuzes, Proximity, Electrical, Part Two (U)*

Discusses basic principles and design considerations for radio proximity fuzes operated in the VHF and UHF bands.

r. AMCP 706-213 (S), Engineering Design Handbook, *Fuzes, Proximity, Electrical, Part Three (U)*.

Describes various types of radio proximity fuzes that operate at microwave frequencies.

s. AMCP 706-214 (S), Engineering Design Handbook, *Fuzes, Proximity, Electrical, Part Four (U)*.

Discusses various types of nonradio fuzing systems and describes the use of multiple fuzing methods.

t. AMCP 706-215 (C), Engineering Design Handbook, *Fuzes, Proximity, Electrical, Part Five (U)*.

Discusses fuze testing and various types of power sources used in the design of safing and arming devices.

APPENDIX I. MATHEMATICS OF THE BALL ROTOR

Fig. A-1 shows a ball rotor with a diametral hole containing a detonator. A typical x, y, z triad is oriented with its z direction along the detonator and is turned in space at the velocity Ω exactly as the detonator axis turns. The ball may further rotate about this triad with the velocity $\dot{\phi}$. The ball is encased within the missile that is assumed to be following a straight path along its axis and to be spinning at the rate ω_o.

In the figure, the y, the z, and the spin axes are in the plane of the paper which makes the x axis perpendicular to the paper. The moment of inertia with respect to the x and y axes is I and with respect to the z axis is J. The angular motion of the ball is given by $\dot{\phi}$ about the z axis, ω about the missile spin axis, and $\dot{\theta}$ about the x axis.

To solve for the motion of the ball, one assumes the following: The ball is acted upon by the setback or creep forces, Z, with X and Y the frictional forces given by μZ, and $-\mu Z$ respectively and the detent forces, F_d. Z acts along the missile axis, X is parallel to the x axis, Y is perpendicular to X, and F_d is in the plane of the paper.

For the dynamics of rotating bodies, the general differential equation for unbalanced torque is given in vector notation as

$$G = \frac{dh}{dt} + \Omega \times h \qquad \text{(A-1)}$$

where h is the vector angular momentum, G is the torque applied to the body, and Ω is the angular velocity of the triad in the body. The vector components of angular velocity, momentum, and torque are

$$\begin{aligned} \Omega_x &= \dot{\theta} \\ \Omega_y &= -\omega \sin(a - \theta) \\ \Omega_z &= \omega \cos(a - \theta) + \dot{\phi} \end{aligned} \qquad \text{(A-2)}$$

$$\begin{aligned} h_x &= I\dot{\theta} \\ h_y &= -I\omega \sin(a - \theta) \\ h_z &= J[\omega \cos(a - \theta) + \dot{\phi}] \end{aligned} \qquad \text{(A-3)}$$

$$\begin{aligned} G_x &= Yr - 2F_d r = -\mu Zr - 2F_d r \\ G_y &= -Xr \cos(a - \theta) = -\mu Zr \cos(a - \theta) \\ G_z &= -Xr \sin(a - \theta) = -\mu Zr \sin(a - \theta) \end{aligned} \qquad \text{(A-4)}$$

Combining Eqs. A-2, A-3, and A-4 according to Eq. A-1, one obtains the equations

$$\begin{aligned} -\mu Zr - 2F_d r &= I\ddot{\theta} \\ -(J-I)\omega^2 \cos(a-\theta)\sin(a-\theta) - (J-I)\dot{\phi}\omega \sin(a-\theta) \\ -\mu Zr \cos(a-\theta) &= -I\dot{\omega}\sin(a-\theta) - (J-I)\dot{\phi}\dot{\theta} \\ -J\dot{\theta}\omega\cos(a-\theta) + 2I\omega\dot{\theta}\cos(a-\theta) \\ -\mu Zr \sin(a-\theta) &= \\ J\dot{\omega}\cos(a-\theta) + J\omega\dot{\theta}\sin(a-\theta) + J\ddot{\phi} \end{aligned} \qquad \text{(A-5)}$$

when the detents are effective, $\theta = 0$, $\dot{\theta} = \dot{\phi} = 0$, $\omega = \omega_o$, and $\ddot{\theta} = \ddot{\phi} = \dot{\omega} = 0$. Eq. A-5 become

$$\mu Zr + 2F_d r = (J - I)\omega_o^2 \cos a \sin a \qquad \text{(A-6)}$$

Before the detents drop out, the problem is statically indeterminate, and therefore, no value can be assigned to the friction torque about the x-axis. All that is known is that its absolute magnitude must be less than $|uZ|$. In particular, in Eq. A-6 only the sum friction torque about the x-axis $(+2F_d r)$ is known. To obtain a first approximation, assume a coefficient of friction u and that F_d is applied at radius r. An approximate value of F_d can than be solved for because all the other terms are known.

$$F_d = \frac{(J-I)\,\omega_o^2 \sin a \cos a - uZr}{2r} \qquad \text{(A-7)}$$

From Eq. 6-17 and $f = uF_d$, the approximate spin at which the detents tend to move will be

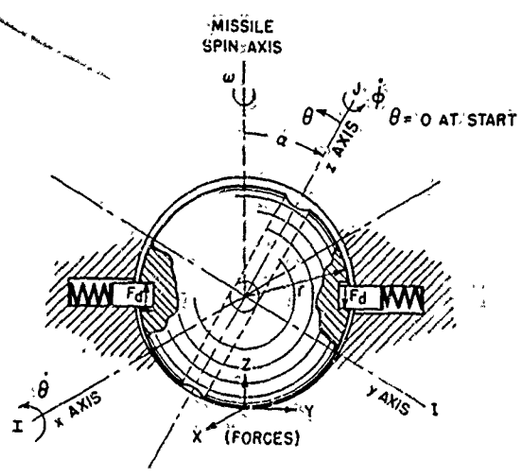

Figure A-1. Ball Rotor Nomenclature

obtained by combining Eqs. 6-17 and A-6

$$\omega_n = \sqrt{\frac{2kr\,x_y + a^2 Zr}{a(I-J)\sin\alpha\cos\alpha + 2r\,m_d\,(x_y + r_y)}} \qquad \text{(A-8)}$$

Does the ball rotate when the detents drop out? Set $F_d = 0$ in the first Eq. A-5. Since aZ can never cause a change in θ, $\dot{\theta}$, or ω_n the dynamic terms must drive the ball.

Therefore, $(J-I)\omega_n^2 \sin\alpha \cos\alpha$ must be $> aZr$ for $\ddot{\theta}$ to be greater than zero. When they are equal, the ball will be ready to move. Then, because $\dot{\theta} = 0$

$$\omega = \sqrt{\frac{aZr}{(J-I)\sin\alpha\cos\alpha}} \qquad \text{(A-9)}$$

REFERENCES

1. K. L. Nielsen and J. L. Synge, "On the Motion of a Spinning Shell," Q. Appl. Math. IV, 3 (October 1946).
2. W. Kizner, *The Ball Rotor Problem (U)*, Picatinny Arsenal, Research Memorandum No. 4, Dover, N.J., January 1955 (Confidential).
3. W. Kizner, *The Ball Rotor Problem – No. II (U)*, Picatinny Arsenal, Research Memorandum No. 7, Dover, N.J., February 1955 (Confidential).

APPENDIX II. JOURNAL ARTICLES OF THE JANAF FUZE COMMITTEE

01.0 *Introduction to the Use of Military Standards*, (Nos. 300-399), 23 August 1955, AD-467 997.

02.0 *Ground or Water Functioning Test for Use in Development of Fuzes*, 23 August 1955, AD-467 998.

03.0 *Check List for Establishing a Testing Schedule for Guided Missile Fuzes and Safety and Arming Mechanisms*, 18 January 1956, AD-467 999.

04.0 *Target Functioning Test for Use in Development of Impact Fuzes*, 20 June 1956, AD-468 066.

05.0 *Safety and Operability Test at Upper Service Extremes of Accelerations, for Use in Development of Projectile Fuzes*, 20 June 1956, AD-468 067.

06.0 *Target Impact Ruggedness Test for Use in Development of Fuzes Incorporating Delay After Impact*, 20 June 1956, AD-468 068.

07.0 *Safety and Operability Test at Service Extremes of Temperature and Maximum Accelerations, for Use in Development of Projectile Fuzes*. 20 June 1956, AD-468 069.

08.0 *Investigation of Arming Distance for the 2" Aircraft Rocket Fuzes (U)*, 20 June 1956 (Confidential) AD-112 815.

09.0 *Some Problems Associated with Arming Wires*, 20 June 1956, AD-112 814.

10.0 *Fuze Test Facilities of the U.S. Department of Defense*, Revised 7 June 1960, AD-208 140.

11.0 *Automatic-Loading Test for Use in Development of Projectile Fuzes*, 10 September 1957, AD-210 744.

12.0 *Breakdown of Tested Fuzes*, 10 September 1957, AD-208 251.

13.0 *The Sensitivity of Explosive Initiators*, 13 February 1958, AD-208 252.

14.0 *A Discussion of the Need for Study of the Causes of Unintentional Initiations of Explosive Devices Such as Are Used in Fuze Explosive Trains*, 13 February 1958, AD-210 743.

15.0 *Methods of Measuring Arming Distances of Rocket Fuzes*, 11 February 1958, AD 217 966.

16.0 *A Procedure for Measuring Functioning Characteristics of Acceleration Armed Fuzes*, 8 December 1959, AD-232 555.

17.0 *The Physical Properties of Explosives and Inert Materials Whose Physical Properties Resemble Those of Explosives*, 1 March 1960, AD-468 070.

18.0 *Spotting Charges as Used to Monitor Fuze Actions*, 7 June 1960, AD-468 071.

19.0 *A Bibliography of Electronic Fuzing Principles (U)*, 6 December 1960 (Secret).

20.0 *A Survey of Explosively Actuated Devices Used in Fuzes*, September 1960, AD-222 604.

21.0 *Some Aspects of the Design of Boosters*, Richard Stresau and Milton Lipnick, Diamond Ordnance Fuze Laboratories, (now U.S. Army Harry Diamond Laboratories), Washington, D.C., 20 June 1961, AD-270 275.

22.0 *Some Aspects of Pyrotechnic Delays*, 5 December 1961, AD-270 444.

23.0 *A Method for Instrumentating Fly-Over Tests*, 5 December 1961, AD-269 551.

24.0 *Scope, Purpose and Use of Military Standards for Fuzes*, A. W. Baldwin, U.S. Naval Ordnance Laboratory, White Oak, Md., 15 February 1962, AD-281 845.

25.0 *A Target Firing Procedure for Evaluation of of Missile Impact Fuzing Systems*, T. W. Truslow, U.S. Naval Weapons Laboratory, Dahlgren, Va, 11 September 1962, AD-285 504.

26.0 *Humidity as a Factor in Fuze Design and Evaluation*, A. W. Baldwin, U.S. Naval Ordnance Laboratory, White Oak, Md., 1 February 1963, AD-296 582.

27.0 *A Compendium of Mechanics Used in Missile Safety and Arming Devices (U)*, "Accelerometers (U)," Part I, "Runaway Escapements (U)," Section I, The Mechanical and Electromechanical Systems Subcommittee, U.S. Naval Ordnance Laboratory, White Oak, Md., March 1962 (Confidential) AD-346 125. "Clock Escapement Timers (U)," Part II, Section I, June 1967 (Confidential) AD-384 530.

28.0 *Jumble Test History*, C. A. Dock, Frankford Arsenal, Philadelphia, Pa., 13 September 1963, AD-453 621.

29.0 *Random Vibration Testing*, A. J. Karlsen,

U.S. Naval Ordnance Laboratory, Corona, Calif., 17 July 1962, AD-486 920.

30.0 *Exploding Bridgewire Surveys*, Explosives Component Subcommittee, 23 October 1963, AD-831 831.

31.0 *A Compendium of Pyrotechnic Delay Devices*, Explosives Components Subcommittee, 23 October 1963, AD-474 833.

32.0 *Method of Computing Impact Safe Distance For MIL-STD-313*, Picatinny Arsenal, Dover, N.J., 10 September 1964, AD-447 755.

33.0 *Wire-Telemetry Flight-Test Technique*, L. J. Shkolnik, U.S. Naval Ordnance Laboratory, White Oak, Md., 18 August 1964, AD-454 840.

34.0 *Captive-Flight, Terraine-Intercept, Fuze Test Technique*, A.P. Sutten, U.S. Army Harry Diamond Laboratories, Washington, D.C., 14 September 1964, AD-449 941.

35.0 *Flash X-Ray Techniques for Studying Fuze Operation*, L. J. Shkolnik, U.S. Naval Ordnance Laboratory, White Oak, Md., 18 August 1964, AD-460 119.

36.0 *Techniques Employed in Two Methods of Field Testing Missile and Rocket Infrared Fuzes*, T. W. Harwell, Field Tests Subcommittee, 25 November 1964, AD-453 164.

37.0 *Sealed Cavity (Fuze) Leakage Detection and Measurement*, V. Quail, Laboratory Tests Subcommittee, 11 January 1965, AD-457 968.

38.0 *Rotary Acceleration Methods and Instrumentation*, R. K. Krueger, Explosive Components Subcommittee, 5 November 1964.

39.0 *A Field Test Program for Missile-Radar Fuzes*, Field Tests Subcommittee, 1 September 1965, AD-468 871.

40.0 *Air Delivery of Ammunition and Explosives by Parachute*, Laboratory Tests Subcommittee, 1 September 1965, AD-475 515.

41.0 *Vertical Firing Recovery*, Field Tests Subcommittee, 1 July 1966, AD-486 508.

42.0 *Acoustically Induced Vibration*, Laboratory Tests Subcommittee, 15 December 1966, AD-841 648.

43.0 *Determination of Cook-Off Temperatures*, Explosive Components Subcommittee, 3 May 1967, AD-816 238.

44.0 *Mild Detonating Cord*, Explosive Components Subcommittee, 3 May 1967, AD-816 229.

45.0 *The Soft Recovery of Artillery Shell by the Rocket-Sled Method*, Field Tests Subcommittee, October 1967.

46.0 *RF Attenuation of Initiators*, Explosive Committee, 3 May 1967, AD-828 308.

47.0 *Techniques for Determining Burst Heights of Fuze Detonation*, Field Tests Subcommittee, 3 May 1967, AD-829 738.

48.0 *The Use of Conductive Mixes in Electro-Explosive Devices*, H.S. Leopold, Naval Ordnance Laboratory, White Oak, Md., Explosive Components Subcommittee, 3 May 1967, AD-829 731.

49.0 *The Lubrication of Ammunition Fuzing Mechanisms*, Mechanical and Electro-mechanical Systems Subcommittee, 3 May 1967, AD-829 739.

50.0 *Comments on the Inclusion of Explosives in Laboratory and Field Tests of Fuzes*, Laboratory Tests Subcommittee, 3 May 1967, AD-831 138.

51.0 *The Application of Flueric Devices to Ordnance Timers*, Mechanical and Electro-mechanical Systems Subcommittee, 3 May 1967, AD-834 083.

52.0 *A Rain Survey of Rain Simulation Techniques*, Laboratory Tests Subcommittee, 3 May 1967, AD-834 086.

53.0 *Combined Environments Testing*, Laboratory Tests Subcommittee, 12 April 1968, AD-835 813.

INDEX

A

Acceleration
drop, 15-6
firing, 5-2
high, fuze design, 10-1
low, fuze design, 11-1
rocket, 5-3, 6-21
Actuator, 4-11, 7-3
Adiabatic compression initiation, 3-4
Air force, 5-7
Air gun test, 15-3
Alignment force, 5-7
Ambient pressure, 5-7
Ammunition, typical 1-3
Analog computer use, 14-11
Analysis of data, 14-12 15-14
Antiremoval device, 13-2
Arming
bomb fuze, 12-1, 12-7
chemical, 8-10
considerations, 8-2
delay, 8-2, 8-7, 8-9, 8-10, 12-6
electric, 7-1
fluid, 8-1, 8-9
mechanical
concept, 5-1
devices, 6-1
rotary devices, 6-13, 9-8, 10-3, A-I-1
sequential leaf, 6-16, 10-3
spiral unwinder, 6-12
motion-induced, 8-11
pin, 1-7, 12-9
principles, 5-1
process, 1-2
two-feature requirement, 9-3

B

Ball rotor, ball cam rotor, 6-17, A-I-1
Ballistic environments, 5-2, 12-4, 15-5
Battery, 3-8, 5-8
Belleville spring, 13-1
Bellows motor, 7-3
Bomb
bomblet fuze, 12-13
clustering, 12-3, 12-11
depth, 12-11
explosive train, 12-5
fragmentation, 12-12
fuze action, 12-1
impact fuze, 12-3
propeller gear train, 12-3
proximity fuze, 12-12
time fuze, 12-8
trajectories, 12-1
typical, 1-3
Bomblet fuze, 12-13
Boobytrap, 13-5
Booster
M21A4, 10-7
assembly, 4-11 9-7
charge, 4-10
Bore safety, 9-2

C

Capacitor, 3-9, 14-10
Centrifugal force, 5-6, 6-4
Centrifugal pendulum, 6-14
Centrifuge test, 15-3
Chemical arming delay, 8-11
Clockwork, 6-19, 10-8. *See also* Escapement
Clustering, bomb, 12-3, 12-11
Coanda effect, 8-1
Coil spring, 6-1, 10-1
Combination fuze, 1-6
Command fuze, 1-6, 3-2, 8-11
Compatibility of common explosives and metals, 4-3
Components, 14-10. *See also* Explosive component
Compression spring data, 6-5
Computer, analog, 14-11
Constant force spring, 6-5
Construction techniques, 4-9, 14-5
Contact contamination prevention, 14-1
Contact sensing, 3-1
Contour, 2-4
Cord, detonation, 4-12
Coriolis force, 5-6
Creep, 5-3

D

Dashpot, 8-7
Definition and purpose of fuzes, 1-1

Delay
element, 4-9, 12-7
for arming, 8-1, 8-7, 8-9, 8-10, 12-5
for functioning, 1-5, 3-9, 12-2, 12-10
mixture, 4-9
Depth bomb fuze, 12-11
Design
explosive train, considerations for, 4-12
for high acceleration, 9-6, 10-1, 10-3
for low acceleration, 11-1, 12-1
for stationary ammunition, 13-1
general considerations, 2-1, 9-1, 14-1
guidance, 14-1
human factors engineering, 2-6
need for formality, 2-4
trade-offs, 2-2
use of standard components, 2-3
Detent, 6-10, 9-8, 10-5
Detonating cord, 4-12
Detonation, 4-2
Detonator, 4-6, 9-8
Detonator safe, 5-1, 9-2
Development steps, 9-3
Dimple motor, 7-3
Disk rotor, 6-13
Dock escapement 6-23
Drag, 5-3

E

Economics, 2-2
Electric
arming, 7-1
component, 14-10
component initiation, 4-6
fuze initiation, 4-6
generator, 7-3
initiator, 4-6
power source
battery, 3-8
electrostatic generator, 3-7
piezoelectric generator, 3-6
test, 15-2
timing circuit, 3-9
Electronic tube, 7-3
Electrostatic generator, 3-7
Encapsulation, 14-6
Environment, 5-5, 9-1, 15-10
Escapement
clockwork, 6-19, 10-8
description, 6-22
gear train, 6-22, 6-24
Junghans, 6-22
runaway, 6-20
spring design, 6-23
tuned, three center, 6-24
tuned, two center, 6-21
untuned, two center, 6-20
Explosive
actuator, 4-11, 7-3
compatibility, 4-3
component, 4-1, 15-2
detonation velocity, 4-2
element initiation, 3-9
gas evolved, 15-10
initiation, 3-1, 3-5
materials, 4-1, 4-4
motor, 7-3
precautions for safety, 4-3
properties, 4-4
rules for handling, 4-4
sensitivity, 4-3
train, 4-1, 4-12, 12-5

F

Fault tree analysis, 14-12
Fin-stabilized projectile, fuzes for, 10-1
Firing pin, 3-3
Flash detonator, 4-6
Fluerics, 8-1
Fluid flow, 8-1
Forces of the air stream, 5-7
Formality, need for, 2-4
Fragmentation bomb, 12-12
Friction initiation, 3-5, 13-5
Functioning, 1-5, 3-9, 12-2, 12-10
Fuse, 4-12
Fuze
AN MARK 230, 12-11
M48A3, 6-4
M198, 12-9
M204A2, 11-4
M217, 11-4
XM218, 8-9
M404A1, 1-2
M502A1, 10-8
M505A3, 10-11
M517, 14-8
M525, 1-7, 6-4
M532, 10-3
XM539E4, 3-7, 9-10
XM544E1, 4-12
M551, 11-6

Fuze (Cont'd)
XM557A1, 9-12
XM571, 2-6, 3-4
M603, 1-5
XM717, 8-7
M904E2, 3-3, 12-3
M906, 12-7
action, 1-1
calculations, 9-3
categories, 1-5
definition of fuzes, 1-5
design considerations, 2-1, 9-3, 9-3
development steps, 9-3
model designation, 1-6
purpose, 1-5
requirements, 1-5, 9-1, 9-3
specification origin, 2-1

G

Gasless and gas producing delay mixture, 4-9
Gear train, 6-22, 6-24, 12-3
Glass beads for arming delay, 8-10
Glossary, G-1
Grenade fuze, 8-9. 11-3
Guided missile fuze, 11-2

H

Hairspring, 6-5
Hand grenade fuze, 11-3
High explosive, 4-1
Hinge pin, 6-9
Human factors engineering, 2-5
Humidity environment, 9-2
Hydrostatic pressure, 5-7

I

Igniter, 4-11
Illustrations, list, ix
Impact fuze
action, 1-5
bomb, 12-3
description of representative, 1-7
design, 9-5, 12-2
Impact sensitivity of explosives, 4-3
Influence sensing, 3-2
Information sources, 2-7
Initiation
electric fuze, 3-5
mechanical fuze, 3-3
principles, 3-1
Initiator, 4-6, 9-7
Interrupter, 6-7, 10-5, 11-2

J

Journal articles of JANAF Fuze Committee, A-II-1
Junghans escapement, 6-22

K

Knob, 6-10

L

Land mine fuze, 13-1
Launched grenade fuze, 11-6
Lead, 4-10
Lever, 6-10
Linkage, 6-10, 14-9
Logic techniques, compared with fluerie, 8-8
Low explosive, 4-1
Lubrication, 14-7

M

Maintenance, 14-13
Materials, 14-3
Mathematics of the ball rotor, A-I-1
Mechanical
components, 14-11
fuze initiation, 3-3
time fuze, 10-8
Mild detonating fuze, 4-12
MIL-STD test, 15-1, 15-13
Mine fuze, 1-3, 13-1
Model designation of fuzes, 1-6
Mortar projectile fuze, 1-7, 10-3
Motion-induced arming, 8-11
Multiple fuzing, 2-3

N

Nonexplosive fuze, 1-6

O

Output characteristics of initiators, 4-8

P

Packaging, 14-2
Patenting, 2-5
Percussion initiation, 3-4

Percussion primer, 4-6
Performance test, 15-1
Philosophy of design, 2-1
Physical properties of explosives, 4-5
Piezoelectric transducer, 3-6
Pin
  arming, 1-7, 12-10
  firing, 3-3
  linkage, 6-10
  shear, 6-9
Pivot, 6-10
Pneumatic arming delay, 8-7
Popovitch escapement, 6-23
Potting compound, 14-3
Power source, 3-5, 3-7, 15-2, 15-5
Power spring, 6-5
Presetting of time fuzes, 3-2
Pressure, ambient, 5-7
Pressure-travel relation of projectile, 5-2
Primary high explosive, 4-2
Primer, 4-6
Projectile fuze
  design, 9-5, 9-10, 12-2
  impact, 1-5, 1-7, 12-3
  mechanical time, 10-8
  typical, 1-2
Proof test, 15-5
Propeller, bomb fuze, 12-10
Proximity fuze, 1-6, 3-2, 12-12
Pull-release device, 13-2
Purpose of fuzes, 1-1

R

Rain insensitive fuze, 9-11
Rain test facility, 15-12
RC circuit, 3-9, 7-4
References, R-1. *See also the end of each chapter*
Relay, 4-10
Reliability, 2-2
Requirements, 1-3, 9-1
Resistor, 14-10
Rifle grenade fuze, 11-5
Rocket
  -assisted projectile, 10-8
  fuze, 1-2, 11-1
  sled test, 15-4
Rotary device
  ball cam rotor, 6-18
  ball rotor, 6-18, A-I-1
  centrifugal pendulum, 6-14
  disk rotor, 6-13, 9-8
  rotary shutter, 6-17, 10-7
  Semple plunger, 6-15
  sequential leaf, 6-15, 10-3
Rotational velocity, 5-3
Ruehlmann RC circuit, 7-6
Runaway escapement, 6-20

S

Safety
  considerations, 2-2
  features, 9-2
  requirements, 2-2, 9-2
  tests, 9-4, 15-2, 15-6
Safing and arming mechanism, 11-2
Sea mine fuze, 13-4
Sealing material, 14-4
Secondary high explosive, 4-2
Self-destruction, 1-6, 3-2, 11-2
Semple plunger, 6-15
Sensitivity of explosives, 4-3
Sequential leaf arming, 6-15, 10-3
Setback, 5-5
Setforward, 5-7
Setter components linkage, 14-2
Shear pin, 6-9
Shelf life factors, 15-10
Shock machine, 15-4
Slider, 6-8, 10-4, 11-2
Small arms fuze, 10-10
Solder, 14-5
Specifications, 2-1, 2-4, 9-1
Spin
  during assembly, 9-3
  -stabilized projectiles, fuzes for, 10-3
  test, 15-3
  velocity, 5-3
Spiral unwinder, 6-12
Spring
  Belleville, 6-5, 13-1
  coil, 6-1, 10-1
  compression data, 6-5
  constant force, 6-5
  design, 6-23, 10-1, 10-3, 12-10, 13-1
  equations, 6-2
  escapement, 6-19
  hair, 6-5
  motion of masses of springs, 6-1
  power, 6-5
  types, 6-1
Squib, 4-6, 4-11
Stab initiation, 3-3
Stab initiator, 4-6
Standardization, 2-3

Stationary ammunition, 13-1
Statistical data analysis, 15-13
Storage life, 4-5
Superquick fuze, 1-5
Surveillance test, 15-10
Switch, 7-1, 14-1
Symbols, List of, xiv

T

Tables, List of, xiii
Tactical purpose of bomb fuzes, 12-11
Tangential force, 5-6
Target sensing, 3-1
Telemetry, 15-5
Temperature environment, 9-2
Testing
  development step, 9-3
  environment, 15-10
  MIL-STD, 2-2, 15-13
  performance, 15-1
  procedure, 9-3, 15-1
  safety, 9-4, 15-2
  surveillance, 15-10
Thermal battery, 3-8
Time
  circuits, 3-9, 7-3
  fuze, 1-6, 12-8
  presetting, 3-2
  setting mechanism, 2-6
Tolerancing, 14-9
Tooth design for escapements, 6-23, 6-24
Torque, 5-6
Trade-offs in design, 2-2
Trembler switch, 7-1
Trip lever, 6-11, 13-4
Tube, electronic, 7-3

V

Vane, 12-10
Velocity of detonation, 4-2