UNCLASSIFIED

AD NUMBER

AD888281

NEW LIMITATION CHANGE

TO

Approved for public release, distribution unlimited

FROM

Distribution authorized to U.S. Gov't. agencies and their contractors; Critical Technology; JUN 1971. Other requests shall be referred to Naval Ship Systems Command, Washington, DC.

AUTHORITY

USNSSC ltr, 15 Aug 1973

THIS PAGE IS UNCLASSIFIED

AD 888 281

HANDBOOK OF VEHICLE ELECTRICAL PENETRATORS, CONNECTORS AND HARNESSES FOR DEEP OCEAN APPLICATIONS

This document is subject to special export controls and each transmittal to foreign governments or foreign nationals may be made only with prior approval of Commander, Naval Ship Systems Command (Ships 03424), Washington, D. C. 20360

DEEP OCEAN TECHNOLOGY PROGRAM

NAVAL SHIP ENGINEERING CENTER

HYATTSVILLE, MARYLAND 20782

JULY 1971, REV 00

ABSTRACT

The factors involved in the design and development of Deep Submergence Vehicle electrical hull penetrators, connectors, and harnesses are outlined. Designs which have seen use over the years are noted. The advantages and limitations of these designs are detailed. Recommendations for the proper design of electrical penetrators, connectors and harnesses are offered. Suggested test programs to assure the design adequacy are detailed. While this work is primarily directed to components used on Deep Submergence Vehicles, the Handbook notes that these components can be effectively used on other systems such as habitats, deep moored objects, and other similar devices.

PRECEDING PAGE BLANK - NOT FILMED

PREFACE

The Deep Ocean Technology Handbook of Vehicle Electrical Connectors, Penetrators and Harnesses for Deep Ocean Applications was prepared as a guide for designers, engineers, and operating personnel concerned with the deep ocean environment.

It is a compilation of engineering criteria obtained from published sources, experimental investigations, and consultations with electrical connector manufacturers, users, and deep submergence vehicle manufacturers and users.

The Handbook is based on work being performed under the Deep Ocean Technology Program. It consists of presently available information and will be updated periodically as work progresses. The loose-leaf form of the Handbook is for convenience in incorporating subsequent additions and changes.

It will be noted that there is information provided in the Handbook which is common to various deep ocean connector, penetrator and harness applications and not only for deep submergence vehicles.

Considerable narrative material is included in this edition of the Handbook. When military specifications are issued covering connectors, penetrators and harnesses, much of this material will be deleted in future revisions.

PRECEDING PAGE BLANK - NOT FILMED

ADMINISTRATIVE INFORMATION

This Handbook has been prepared for the U. S. Navy under the sponsorship of Deep Ocean Technology Program. The work was conducted under the technical direction of the Electrical Branch, Code 6157E, of the Naval Ship Engineering Center, Hyattsville, Maryland. The Electric Boat division of General Dynamics Corporation has prepared this document as Phase II task under Contract N0024-68-C-5434, Ser. 4636, Task 12318. The Program Manager for the Deep Ocean Technology Program is the Naval Ships Systems Command (SHIPS 03424). Mr. John Regan, Code 6157E, has served as the NAVSEC Technical Agent on the Program.

PRECEDING PAGE BLANK - NOT FILMED

Method of Updating and Revising the Handbook

This Handbook is designed to be periodically revised to reflect new information on electrical connector, penetrator and harness materials, manufacturing techniques, and general technology gained via the Deep Ocean Technology (DOT) Program. Maintenance and expansion of the Handbook is the responsibility of the Naval Ship Systems Command utilizing the Naval Ship Engineering Center as Technical Agent.

As the Handbook is published in loose-leaf form, revisions and additions can be made easily. A User Comment Return Form is included in the Handbook as a convenient means of obtaining feedback for additions or amendments. Individuals within the Navy and the non-military community are encouraged to submit comments and additional data for future revisions of the Handbook. Material received will be reviewed by NAVSEC and considered for possible inclusion in the Handbook at a later date.

PRECEDING PAGE BLANK - NOT FILMED

TABLE OF CONTENTS

Section	Title	Page
	Abstract	i
	Preface	iii
	Administrative Information	v
	Introduction	xi
1	Electrical/Electronic Distribution System Vehicle Design Considerations	1-1
2	Electrical Penetrator Design	2-1
3	Electrical Connector Design	3-1
4	Pressure Proof Electrical Harness Design	4-1
5	Material Selection Guidelines for Optimum Performance in Seawater	5-1
6	Reliability and Quality Control Considerations	6-1
7	Bibliography	A-1
8	Appendix 1 - Glossary	A-1-1
9	Appendix 2 - Tables	A-2-1
	Distribution List	
	User Comment Return Form	

PRECEDING PAGE BLANK - NOT FILMED

INTRODUCTION

This Handbook has been prepared to provide engineering information and guidance in designing, testing, and installing electrical penetrators, connectors, and harnesses on Deep Submergence Vehicles (DSV). While the Handbook is primarily devoted to DSV applications, the information provided can be advantageously applied to systems and components other than DSVs such as habitats and deep moored electrical and electronic components. For instance, it will be noted that design criteria established for DSV electrical penetrators is also applicable to habitats or personal transfer capsules. Also, the pressureproof electrical harnesses used on DSVs are similar in design to those which would be provided to offer circuit continuity between deep moored electronic components.

The Handbook is divided into the following sections for presentation of the electrical penetrator, connector and harness design data:

Section 1 - Lists the electrical distribution design information necessary at the initiation of a DSV electrical penetrator, connector, or harness development program.

Section 2 - Offers a design analysis for DSV electrical hull penetrator designs.

Section 3 - Offers a design analysis for pressure proof DSV electrical connector designs.

Section 4 - Offers a design analysis for pressure proof DSV electrical harness designs.

Section 5 - Discusses the materials selection considerations for designing connectors and penetrators for use in the sea water environment.

Section 6 - Discusses quality control considerations to assure component reliability.

Section 7 - Offers a brief bibliography on related subject items.

Section 8 - Covers a glossary for pressure proof electrical connectors and penetrators.

Section 9 - Includes a number of tables which can prove useful to the designer.

Section 1

TABLE OF CONTENTS

Section	Title	Page
1.1	System Electrical Requirements	1-2
1.2	DSV Power Distribution System Consideration	1-12
1.2.1	External Distribution	1-12
1.2.2	Internal Distribution System Considerations	1-17
1.2.3	General Distribution System Considerations	1-17
1.2.4	Electronic Component Interference on DSV's	1-20
1.3	System Interconnection Considerations	1-20

PRECEDING PAGE BLANK - NOT FILMED

Section 1

LIST OF FIGURES AND TABLES

Figure	Title	Page
1-1	Typical DSV Electrical Cabling System Schematic	1-3
1-2	Typical DSV Outboard Electrical Components	1-4
1-3	Typical Vehicle Penetrator Cabling	1-14
1-4	Typical Vehicle Penetrator Cabling -- Power	1-15
1-5	Schematic of DSV Power Distribution System -- External	1-16
1-6	Schematic of DSV Power Distribution System -- Internal	1-18
1-7	Fields Between Two Conductors	1-21
1-8	Shielding of Fields	1-22

Table	Title	Page
1-1	Typical Class 1 Vehicle Outboard Electrical Component List	1-5
1-2	Typical Voltage and Amperage Requirements for Outboard Components on Submersibles	1-6
1-3	Typical Outboard Electrical/Electronic Component Cabling System Data Sheet	1-13

Section 1

ELECTRICAL/ELECTRONIC DISTRIBUTION SYSTEM VEHICLE DESIGN CONSIDERATIONS

The engineer responsible for the electrical harnessing system on a deep submergence vehicle must have the following design information prior to the initiation of the design and development program:

a. Vehicle operating depth
b. Vehicle test depth
c. Shock requirements
d. Vibration requirements
e. Vehicle temperature ranges -- operating, storage and transit
f. Vehicle hull material
g. Location of electrical penetrators in hull
h. Space limitations inboard and outboard of the hull penetrators.
i. Identification and location of all electrical components outboard of the pressure hull.
j. Vehicle service life
k. Vehicle fabrication schedule
l. Assigned weight approximation for vehicle electrical/electronic system.
m. Anticipated vehicle cost and budget for electrical distribution system.
n. Outboard electrical/electronic component data (see listing).
o. Vehicle component arrangement drawing.

The preceding design information allows the engineer to lay out the entire electrical/electronic system. It gives him all the data required to select system components such as connectors, penetrators, cables and wiring.

Packaging underwater electrical/electronic systems is definitely one of the most critical design considerations in the development of DSVs. This system includes not only the externally located components but encompasses all of the constituents from the internal control or readout devices inside the vehicle to and including the external sensor or components. The individual components which comprise the overall electrical distribution system include the following:

a. Electrical hull penetrator.
b. Connectors mounted to the penetrators.
c. Outboard cable which runs from the penetrator to the outboard component.
d. Connector mounted to the outboard component.
e. Outboard cable support and protection devices.
f. Inboard cabling (harness).

It will be noted that items b, c, and d could be grouped together and described as the outboard harness assembly. See figure 1-1.

As seen in figure 1-2, there are many electrical components mounted outboard of the manned sphere of DSVs. These components service the following systems:

a. Electrical power (batteries, motors).
b. Sonar (hydrophones, transducers).
c. Communication (antennas, UQC).
d. Lighting
e. TV cameras,
f. Safety actuating devices.
g. Water and mercury level sensors.
h. Junction boxes.
i. Work performing devices (manipulators).

When discussing the outboard packaging system for DSVs, it can be noted that there are three basic classes of submersibles in operation: (see reference 1)

Class 1 - 5-25 ton vehicles
Class 2 - 25-400 ton vehicles
Class 3 - 700-7,000 ton submarines.

A typical Class 1 vehicle is used here to discuss the outboard packaging systems. This type of vehicle is felt to offer the basic equipments that are necessary for safe DSV operation. The Class 2 vehicles, as can be expected, are much more sophisticated with respect to the electronic equipments located outboard of the vehicle pressure hull. Table 1-1 is a listing of typical Class 1 vehicle outboard electrical components.

1.1 SYSTEM ELECTRICAL REQUIREMENTS

Table 1-2 illustrates DSV electrical system requirements with regard to electrical current and voltage levels typically encountered. As voltage potentials range from 12 volts dc to 440 volts ac, (with the usual high limit for dc voltages being near 120 volts), these systems do not impose stringent requirements on electrical connectors. Also, electrical currents range up to only several amperes for the majority of electrical loads, and this magnitude of current is not usually considered a design problem.

The only electrical loads generally exceeding the previously mentioned current levels are various externally mounted motors and underwater floodlamps.

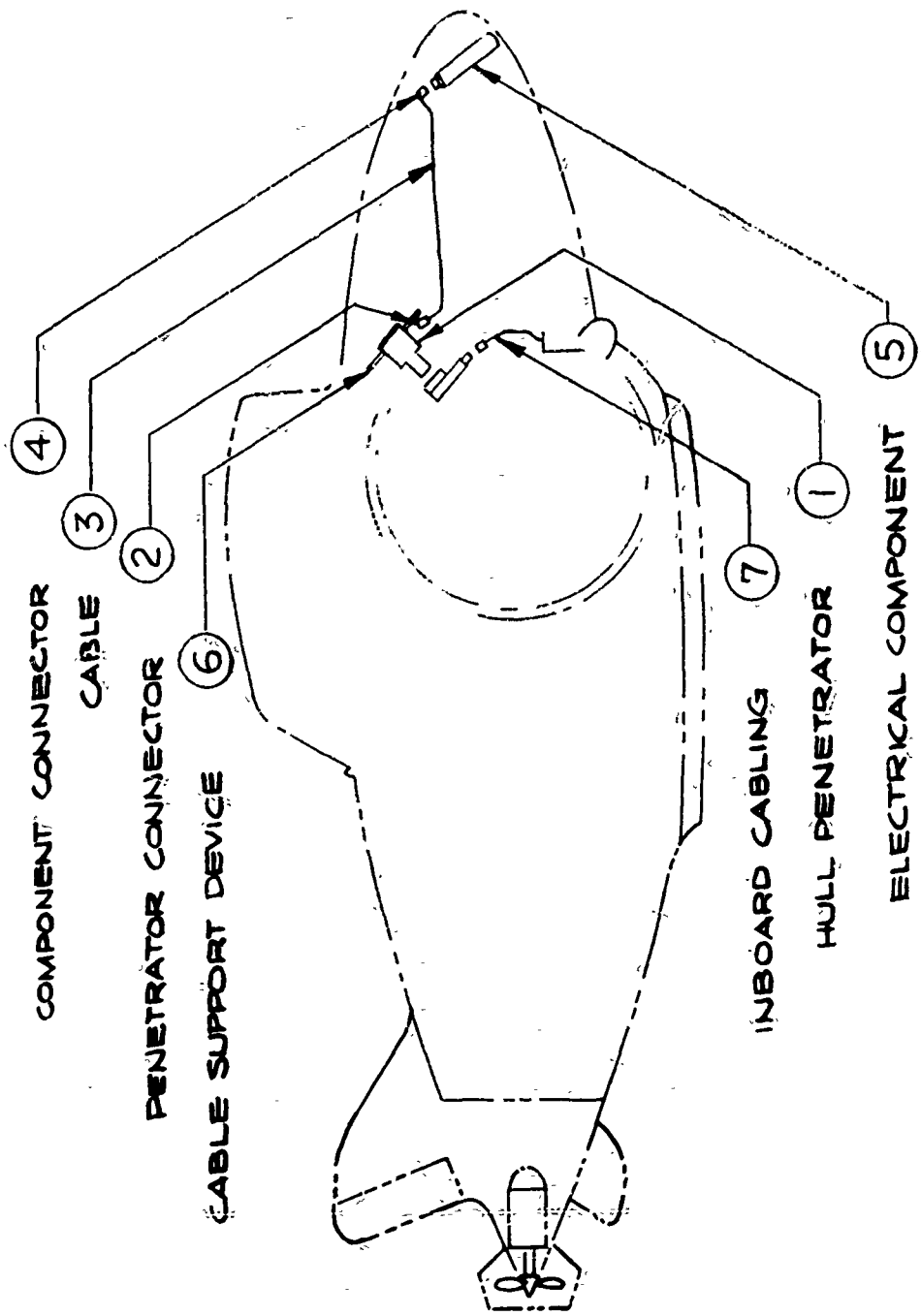

Figure 1-1. Typical DSV Electrical Cabling System Schematic

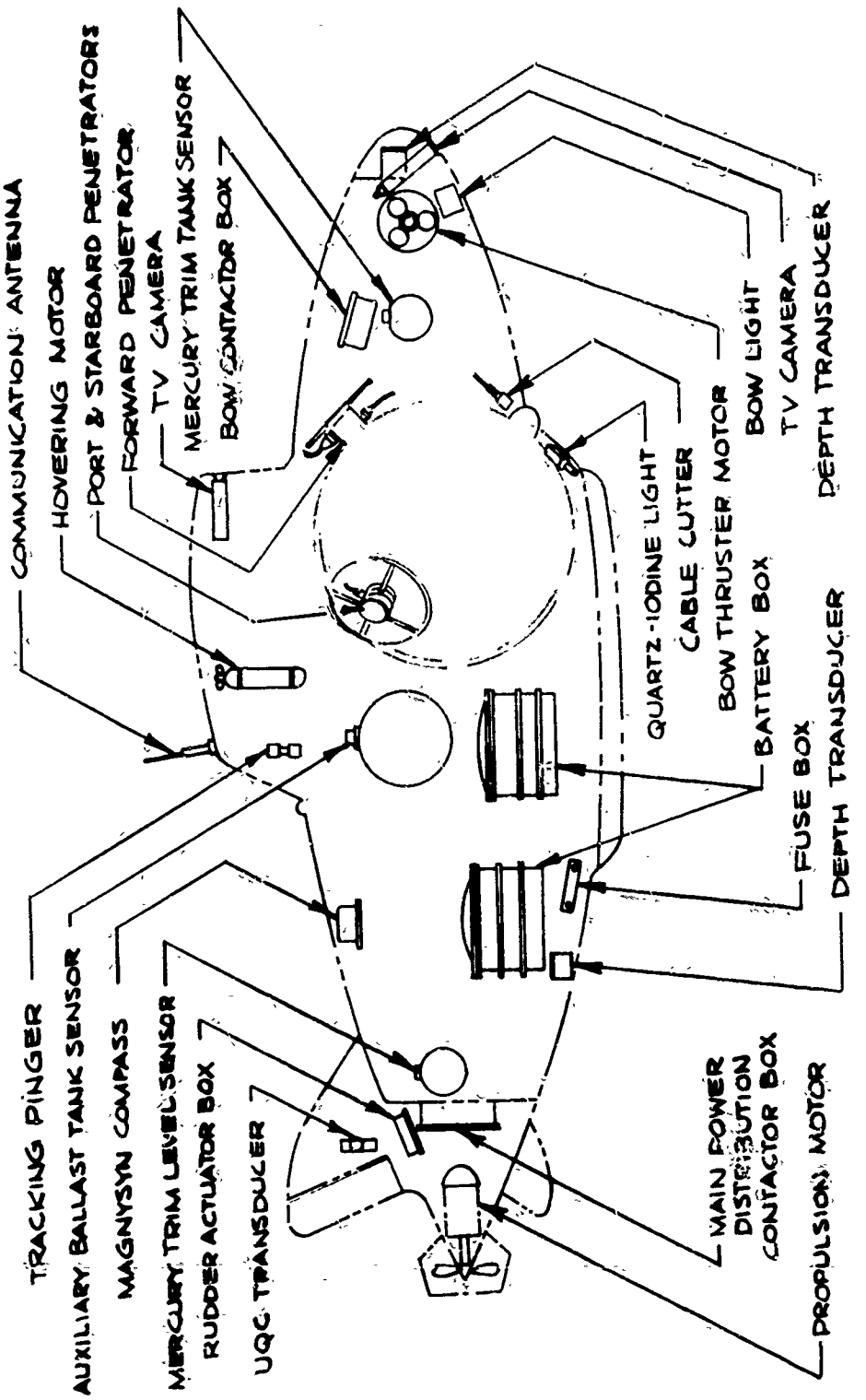

Figure 1-2. Typical DSV Outboard Electrical Components

Table 1-1. Typical Class 1 Vehicle Outboard Electrical Component List

	Component	Quantity
1.	Main propulsion motor (7-1/2 hp)	1
2.	Low thruster motor (2 hp)	1
3.	Hovering motor (2 hp)	1
4.	Outboard main distribution box	1
5.	Low-thruster reversing contractor box	1
6.	Main battery box	2
7.	Rudder drive motor and indicator box	1
8.	Fuse container	2
9.	TV cameras -- bow and sail	2
10.	33mm still camera	1
11.	Underwater telephone transducer	1
12.	Fathometer transducer	2
13.	Magnesyn compass sensor	1
14.	Tracking pinger	1
15.	Radio antenna	1
16.	Cable cutter (electrical)	1
17.	Manipulator	2
18.	Auxiliary ballast tank water lever sensor	1
19.	Mercury trim tank level sensor	1
20.	Strobe light	1
21.	Payload lights	2
22.	Bow light	1
23.	Viewport lights	4

Table 1-2. Typical Voltage And Amperage Requirements For Outboard Components on Submersibles

TYPICAL BASIC COMPONENT GROUP	NOTES	NUMBER OF CONDUCTORS REQUIRED	TYPICAL VALUES Volts	Amps	RECOMMENDED CONNECTOR Size
MOTORS					
Main Hydraulic Plant	1	2/2/1	60/60/12	60/2/<1	3 NO. 4 - 3 NO. 16
Auxiliary Hydraulic Plant	2	2/2/1	60/60/12	110/3/<1	3 NO. 0 - 3 NO. 16
Pod Propulsion	3	2/2/1	60/60/12	85/6/<1	3 NO. 4 - 3 NO. 16
Pod Training	4	2/2/1	60/60/12	25/1/<1	3 NO. 12 - 3 NO. 16
Main Propulsion	5	2/2	120	20	3 NO. 12 - 3 NO. 16
Ext. Hydraulic Pump	6	3/2	440/10	15/<1	5 NO. 16
Thruster	7	3/2	440/10	20/<1	3 NO. 12 - 3 NO. 16
Main Propulsion	8	3/2	440/10	45/<1	3 NO. 8 - 3 NO. 16
Main Seawater Pump	9	6/2	440/10	15/<1	3 NO. 16 - 3 NO. 16
Main Propulsion	10	2/2/2	120/240/120/10	15/25/2/<1	3 NO. 12 - 5 NO. 16
Vertical Thruster	11	2/2/2	120/120/10	15/2/<1	9 NO. 16

NOTES:

1. DC Shunt, Armature/Field/Seawater Leak Probe; 3 hp
2. DC Shunt, Armature/Field/Seawater Leak Probe; 6.8 hp
3. DC Shunt, Rev., Filed Control; Arm/Filed/Probe; 4 hp
4. DC Shunt, Rev, Arm/Field/Probe; 1.5 hp
5. DC Series, Rev; Pulse Width Speed Control;
6. 3ϕ AC, Motor Power/Tachometer
7. 3ϕ AC, Rev; Speed Control By Variable Voltage; Motor Power/Tach.
8. 3ϕ AC, Rev. Speed Control By Variable Frequency; Motor Power/Tach.
9. 3ϕ AC, 2-Speed By 2 Winding Sets; 2 or 10 hp; Motor Power/Tach.
10. DC - Shunt, Rev; Speed Control By Arm. Volts And/or Field; Arm/Field/Tach.
11. DC - Shunt, Rev; Speed Control By Field Resist; Arm/Field/Tach.

Table 1-2. (Cont'd)

TYPICAL BASIC COMPONENT GROUP	NOTES	NUMBER OF CONDUCTORS REQUIRED	TYPICAL VALUES		RECOMMENDED CONNECTOR
			Volts	Amps	Size
CAMERAS					
Remote Operated TV	1	4 + 75Ω Coax	12 VDC	<1	5 NO. 20 - 75Ω Coax
Remote Operated TV	2	6 + 75Ω Coax	12 VDC	<1	10 NO. 20 - 75Ω Coax
Remote Operated Still	3	3	30 VDC	14 A. Peak <1 Avg.	3 NO. 16
Remote Operated Still	4	9	30 VDC	14 A. Peak <1 Avg.	9 NO. 16
Still Camera Strobe	5	3	30 VDC	14 A. Peak <1 Avg.	3 NO. 16
Remote Operated Camera Pan and Tilt Mechanism	6	5	115 VAC	1	5 NO. 20
Remote Operated Camera Pan and Tilt Mechanism	7	13	115 VAC	1	14 NO. 16
Remote Operated Camera Pan and Tilt Mechanism	8	10	30 VDC	5	14 NO. 16

NOTES:

1. Remotely Controlled Focus
2. Remotely Controlled Focus, ZOOM, and Iris
3. Remotely Controlled TRIGGER Function Only; 14 Amp Max. Recharge; 3 Sec. Recycle
4. Remotely Controlled with TRIGGER, IRIS, FOCUS, and Shutter Speed Options
5. Remotely Controlled TRIGGER Function
6. PAN And TILT Functions Only
7. With Additional Options: Orientation and Limit Indicators
8. DC Operated Option With Stepping Motors; 5 A. Peak Current During Stepping Pulse.

Table 1-2. (Cont'd)

TYPICAL BASIC COMPONENT GROUP	NOTES	NUMBER OF CONDUCTORS REQUIRED	TYPICAL VALUES Volts	TYPICAL VALUES Amps	RECOMMENDED CONNECTOR Size
TRANSDUCER CIRCUITS					
Seawater Leak Sensing Probe Shaft Tachometer Pressure Temperature Salinity Rudder Angle Dive Plane Angle Propulsion Pod Angle Ammeter Shunts Voltmeter Leads		Generally Twisted Pair, Shielded. May Have Special Requirement Depending on Application And/Or Manufacturer	These Probes Are Usually Powered From The Inboard Device They Are a Part Of. Typical Values Are Currents In Milliamperes And Voltages Less Than 10.		3-NO. 16 or 5 NO. 20

Table 1-2. (Cont'd)

TYPICAL BASIC COMPONENT GROUP	NOTES	NUMBER OF CONDUCTORS REQUIRED	TYPICAL VALUES Volts	Amps	RECOMMENDED CONNECTOR Size
COMMUNICATIONS & SONAR					
Underwater Telephone	1	See Note	See Note	1	3 NO. 16
Intercom Telephone	2	See Note			3 NO. 16
Radio Telephone Whip Ant.	3	Single Coax		<1	50 Ω Coax
CTFM (Continuous Transmission Frequency Modulated) Sonar	4				
Training Mechanism	5	12	115 VAC	1	
Transmitting Hydrophone	6	See Note	500V, P-P	<1	5 NO. 20
Receiving Hydrophone	6	See Note	10V, P-P	<1	3 NO. 16
Sonar Echosounder	7				
Pressure Hull To Transmitter Can		6	30 VDC	1	
Transmitter Can To Hydrophone	6	See Note	500V, P-P	<1	3 NO. 16
Doppler Navigator Sonar					
Transmitting Hydrophone	8	See Note	500V, P-P	<1	5 NO. 20
Receiving Hydrophone	9	See Note	10V, P-P	<1	10 NO. 20

NOTES:

1. Cable Usually Twisted Pair With Shield; Volts About 950 Peak to Peak On Audio Peaks
2. Cable Usually Twisted Pair With Shield; Volts About 10 Peak to Peak On Audio Peaks
3. Voltage Typically 150 Peak To Peak (Radio Frequency) With 50 OHM System.
4. Side Scan Or Obstacle Avoidance
5. 3 Cables; 4 Conductors Each
6. Twisted Pair With Shiled
7. BENTHOS 2670; With Outboard TRANSMITTER Can and Hydrophone
8. 3 Conductors, Shielded; TTS4 SHL Recommended
9. 4 Shielded Pairs; TTFS4 SLL Recommended

Table 1-2. (Cont'd)

TYPICAL BASIC COMPONENT GROUP	NOTES	NUMBER OF CONDUCTORS REQUIRED	TYPICAL VALUES Volts	Amps	RECOMMENDED CONNECTOR Size
LIGHTS					
Underwater Floodlamps					
Mercury Vapor	1	3	110 VAC	10	3 NO. 16
Tungsten - Iodide	1	2	110V, ac/dc	10	3 NO. 16
Tungsten - Iodide	2	2	110V, ac/dc	5	3 NO. 16
Tungsten - Iodide	3	2	28V, ac/dc	1	3 NO. 16
Tungsten - Iodide	4	2	30V, ac/dc	25	3 NO. 12
Navigation - Running	7	2	110V, ac/dc	1	3 NO. 16
Identification Flashing Beacon	5	2	110V, ac	1	3 NO. 16
Strobe, Photographic	6	4	28 VDC	14 (Peak)	5 NO. 16

NOTES:

1. 1000 Watts
2. 500 Watts
3. 75 Watts
4. 750 Watts
5. For Larger Vehicles With ac As Main Source. Smaller Vehicles Utilizing Battery Power Generally Use a Self-Contained, Pressure Activated Flasher.
6. Usually Supplied with 4 Terminal Underwater Connector; 14 AMP Peak Recharge Current After Flash.
7. These Lights Usually Originate From Support Vessel and Are Removed For Diving.

Table 1-2. (Cont'd)

TYPICAL BASIC COMPONENT GROUP	NOTES	NUMBER OF CONDUCTORS REQUIRED	TYPICAL VALUES Volts	Amps	RECOMMENDED CONNECTOR Size
MISCELLANEOUS					
Anchor Payout Solenoid		2	110 VAC	1	3 NO. 16
Ballast Release Solenoid		2	60 VDC	1	3 NO. 16
Single Motion Actuator					
For Various Equipments		2	30 VDC	3	3 NO. 16
For Various Equipments		2	60 VDC	1	3 NO. 16
For Various Equipments		2	110 VAC	1	3 NO. 16
Mechanical Arm (Manipulator)	1				
OPEN LOOP Control		62	24 VAC/dc	1	(3) 24 NO. 16
CLOSED LOOP Control		74	24 VAC/dc	1	(3) 24 NO. 16
Emergency Guillotine	2, 3	2 + 2	30 VDC	See Note	5 NO. 20

Projected Future Electrical Requirements Are Covered By:

3 # 0000 - For Propulsion Motor And Battery Connectors.

Single Contact
#16, 12, 8, 4, 0 and 0000 - For Applications Where Single Conductor Cables Are Used Outboard or Are Projected For Future Use.

NOTES:

1. Electrically Controlled Hydraulic Powered Operators
2. Emergency Devices Usually Have Dual, or Redundant Functions For Safety.
3. Explosive Operated Devices Require 30 a Pulse, Low Resistance Circuit.

Component list, table 1-1, shows that over twenty components are located outboard on the pressure hull of this vehicle. On some DSVs, this number would be increased to over 400 with the addition of more sophisticated sonar sensors, or the use of lights to illuminate the many viewports in a vehicle hull.

It is suggested that each electrical/electronic component located outboard of the DSV pressure hull be indentified as shown in table 1-3. A data sheet containing the information listed in this table will provide the systems engineer with all of the information he requires pertaining to the outboard component. The listing will identify the number, size and types of harnesses required to service each component and will assist in determining the number of penetrators and junction boxes required to service the equipments listed. With this list, it is now possible to develop schematic diagrams as shown in figures 1-3 and 1-4.

1.2 DSV POWER DISTRIBUTION SYSTEM CONSIDERATIONS

In general, the energy source on deep diving submersibles is located outside the pressure hull. This is due to limited space available for containing the source within the hull. The displacement of the energy source reduces the overall vehicle submerged weight.

With the energy source located external to the pressure hull, there also are advantages in keeping the distribution equipment external. These advantages include:

a. Reduction in number and size of electrical penetrations through the hull.
b. Reduction in cable length and voltage drops to large loads located external to the hull.

Utilizing pressure-compensated energy sources and external distribution centers, connectors can be used to penetrate the enclosures. Hull penetrators will only be required for the power control and signal leads actually passing through the hull.

The considerations of voltage, current rating, and maximum fault current must be incorporated into the component design. In addition, the Power Distribution System engineer must be aware of the component rating and utilize circuit protective and current limiting devices to prevent the component ratings from being exceeded.

1.2.1 EXTERNAL DISTRIBUTION -- Figure 1-5 shows a possible distribution system for a research submersible. Connectors would be employed between the energy source and external distribution boxes, between the external distribution boxes and loads, and one end of the cable connecting the external distribution box to the hull penetrator. The connectors used between the energy source and the external distribution box must be capable of carrying the maximum fault current generated by the energy source. By selecting suitable sensing devices on the tie breakers and feeder breakers, the rating of the connectors utilized in these areas must be sufficient to handle the maximum fault energy which may flow prior to tripping of the respective breaker. The purpose of the group feeder breakers is to provide added protection to the connector between the external distribution center and the vehicle and the hull penetrator. The amount of power into the hull is less than the power supplied by the energy source to the power requirements of the

Table 1-3. Typical Outboard Electrical/Electronic Component Cabling System Data Sheet

1. Component Name:
2. Component Case Material:
3. Component Electrical Receptacle:
4. Component Voltage Requirements:
5. Component Amperage Requirements:
6. Component Operating Frequency:
7. Component Electrical and Acoustical Interface Requirements:
8. Component Impedance Requirements:
9. Outboard Component Harness Length:
10. Outboard Component Harness Plugs:
11. Outboard Component Harness Cable:
12. Outboard Component Harness Protection and Support Device:
13. Component Hull Penetrator Requirements:
14. Inboard Connector to Penetrator:
15. Inboard Component Wire Type and Size:
16. Inboard Electrical Connection at Component Black Box:

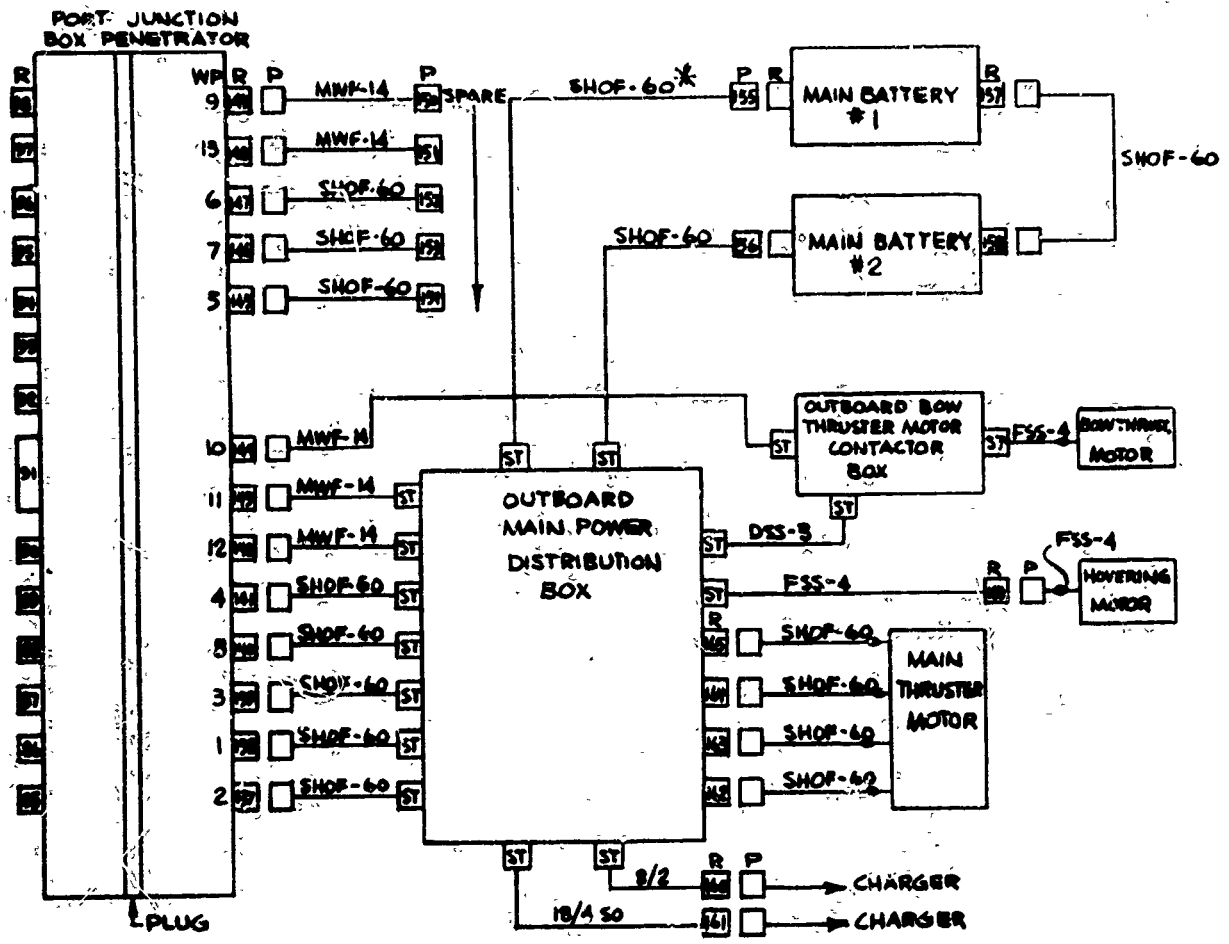

* NEW CABLES ARE BEING DEVELOPED FOR DSV USE

Figure 1-4. Typical Vehicle Penetrator Cabling -- Power

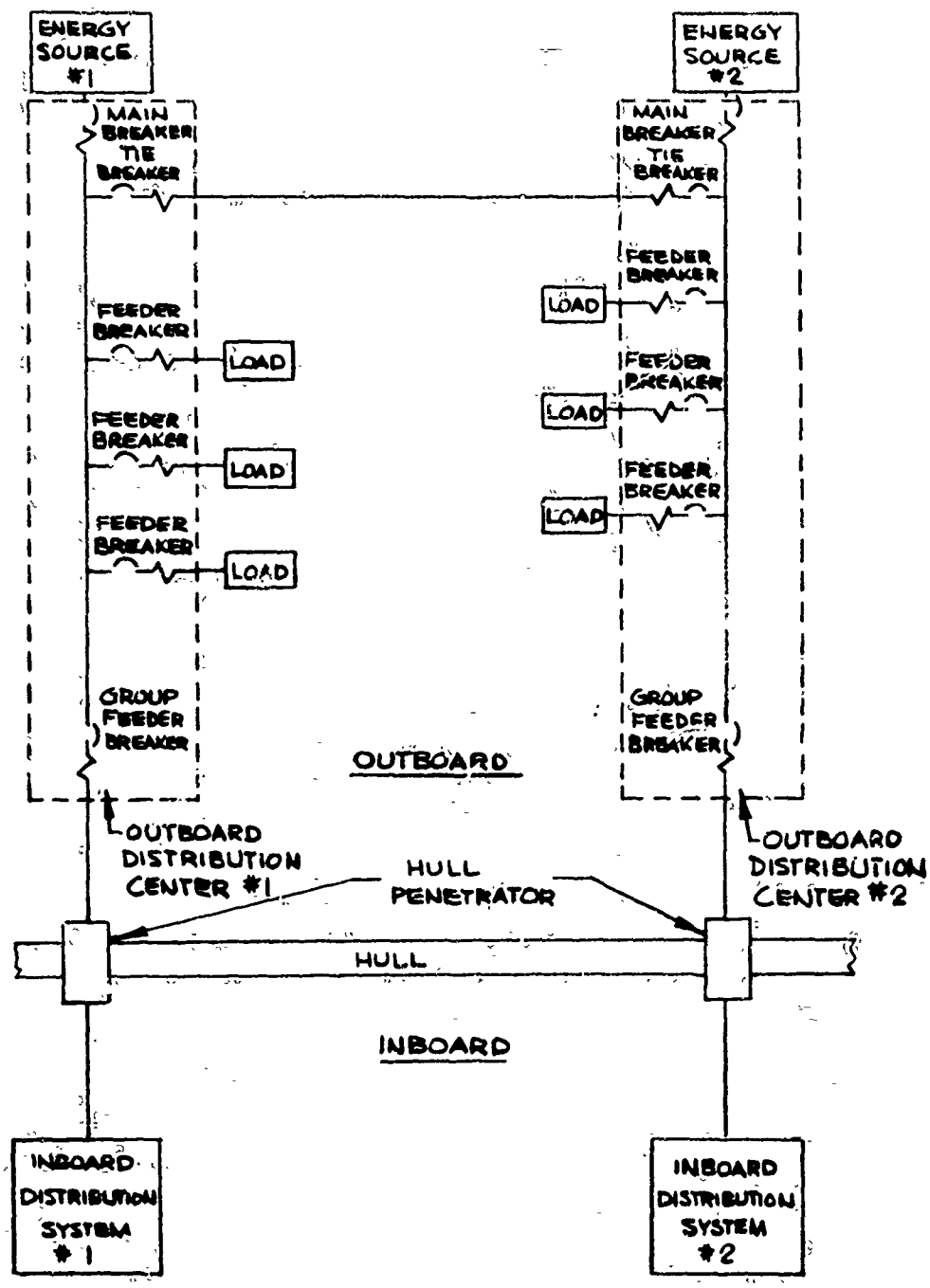

Figure 1-5. Schematic of DSV Power Distribution System -- External

external loads. By utilizing this arrangement, the system engineer can reduce the requirements of the hull penetrator to values which the group feeder breakers are capable of protecting, rather than the maximum fault current which might flow if no protection device was incorporated.

1.2.2 INTERNAL DISTRIBUTION SYSTEM CONSIDERATIONS -- All signal and control cables leaving the component enclosure must also pass through hull penetrators. Similar to the main power hull penetrator, all cables leaving through the control and signal hull penetrators should be protected by feeder breakers located in the internal distribution center as shown in figure 1-6.

All cables which penetrate the hull should be protected by circuit protective devices to reduce the possibility of damage to hull penetrators and connectors. This prevents unlimited power flowing through the components in the event of a fault condition existing.

1.2.3 GENERAL DISTRIBUTION SYSTEM CONSIDERATIONS -- In any submersible having outboard electrical loads, some means must be provided for penetrating the pressure hull with electrical conductors. In addition, these electrical conductors must be identified and classified so they can be located in a manner so as not to degrade electrical system performance by cross-coupling.

In general, the loads on a submersible will place them in one of the following four levels.

a. High power level (motors, lights, main power, etc.)
b. Low power level (relays, control, indicators, etc.)
c. Sensors (passive sonar, magnesyn compass, etc.)
d. Emergency circuits (explosive squibs, etc.)

Each level mentioned above must be further examined to ascertain the effects of the following parameters on the system.

a. Source of interference. (electromagnetic interference)
b. Circuit susceptibility. (electromagnetic susceptibility)
c. Redundancy requirements.
d. Source of interference. (electrostatic interference)
e. Circuit susceptibility (electrostatic interference)

Only after this classification has been completed does a designer have the basic information with which to start the more detailed design.

Assuming now that a detailed tabulation of all cable parameters is available, a preliminary layout can be started. Obviously, a cable carrying high power current from an SCR motor speed control would not be placed near a cable used for an underwater receiving hydrophone. This on-off type of control would generate interference transients that would be very difficult to filter out of the very low level signals in the hydrophone circuit.

Redundancy requirements, by specification or special design, would also require physical

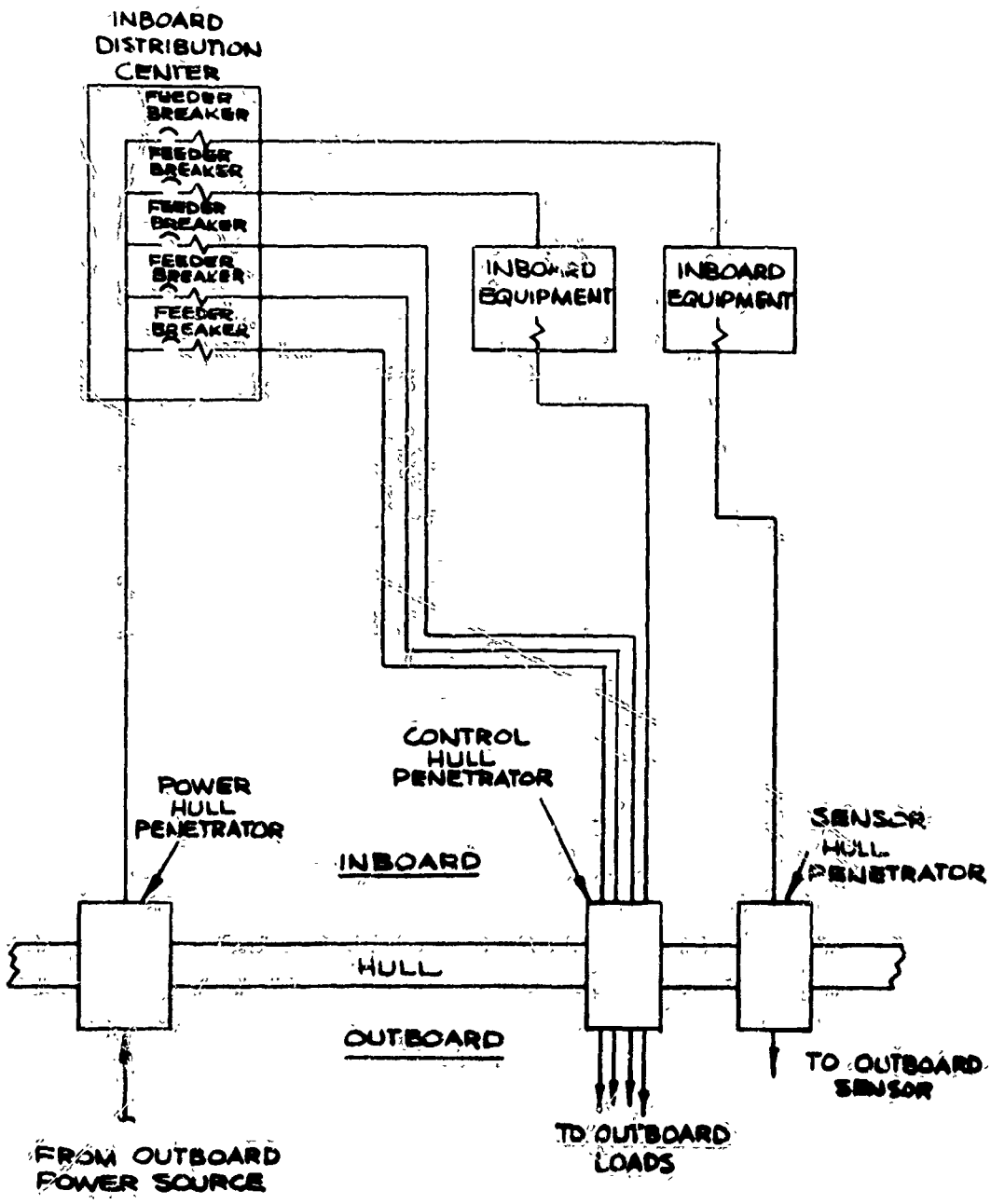

Figure 1-6. Schematic of DSV Power Distribution System -- Internal

separation to avoid loss of both paths by severe damage at one area. These two examples illustrate the more obvious parameters which decide cable layout. Unfortunately, not all cables present such a clear-cut picture.

The usual submersible electrical system is ungrounded; that is, the metallic parts of the vehicle are not normally used to carry electrical power. Thus, power sent out to a load on one conductor must return on another conductor.

In the case of alternating current circuits, the two- or three-conductor path is usually twisted. This is done to try to cancel the alternating magnetic field from each conductor. In order to eliminate all the field, the conductors must occupy the same space. As this is impossible physically, the twisted pair is the next best configuration. A metallic shield is also used at times when electrostatic shielding is also required. It can be seen from the above that if these conductors were physically separated, reduction of the alternating fields would be almost impossible.

Separation of direct current circuit conductors can also raise serious problems. Inductive loads on dc power require special switch and circuit breaker considerations. Separation of conductors, perhaps to utilize certain penetrators, could possibly make a normally resistive load inductive. If the conductors were separated by several feet, a single turn loop of considerable area and significant inductance could be formed, but the loop could prove to be most troublesome during switching operations.

In addition, a single turn loop would generate a substantial magnetic field which could be fatal for certain other devices, such as magnetic compasses and equipment for magnetometer surveys.

Another area sometimes overlooked is the desirable separation of conductors capable of carrying high level fault currents from conductors attached to explosive operated diveces. A high fault current could possibly induce a firing current in the explosive squib and could prematurely activate some system.

The foregoing considerations define the tasks involved in the power distribution design. In general, the following recommendations are offered for these applications.

a. The connector or hull penetrator must have a power rating in excess of the maximum fault current which may flow through the respective circuit as limited by circuit protective devices.
b. On all dc power circuits each polarity should be taken through separate connectors or penetrators. However, conductor loop area should be kept to a minimum to reduce the effects of the magnetic fields generated and their interference with susceptible circuits.
c. AC power circuits, especially three-phase 440 VAC, for example, should be carried through a single nonmagnetic penetrator or connector. Before attempting to separate these conductors into separate penetrators or connectors, a long hard look would have to be taken at the inductive heating effects of these conductors separated by magnetic materials as detrimental or even destructive heating of these materials could occur. If nonmagnetic

materials are used in the magnetic field between conductors, the heating effect would be greatly reduced. However, eddy current heating in any electrically conductive material would still remain.

d. Circuits susceptible to noise or interference should not be routed through a connector or penetrator which carries power and control circuits.

Safety of the vessel is the prime consideration for these recommendations. After an analysis of the loads and mission is completed, a tradeoff may be made. Deviations from the above recommendations may be made as a result of the tradeoffs based on analysis of loads and mission.

1.2.4 ELECTRONIC COMPONENT INTERFERENCE ON DSVs -- DSVs are subject to acoustic and electrical interference. Instrument performance can be degraded by the blanking-out of data and the presentation of erroneous data.

Acoustical interference can be produced by sea noise, self-noise and radiated noise. There exists ambient sea noise which must be tolerated. Self-noise is the noise that the vehicle generates from its own propellers, equipment, or machinery. Radiated noise is that noise which another vessel, surface or submerged, generates.

Of particular concern here is electrical interference. The limited space available on DSVs, and Navy submarines for that matter, causes interference problems which must be seriously considered early in the overall design phase of electrical systems. When a current or voltage is applied to conductors, magnetic and electrical field are formed around the conductors as in figure 1-7. "The magnitude of the interference depends upon the field strength, the field geometry, the rate of change of field and frequency and the susceptibility of the receiving circuit." (reference 2) The electrical cable field can be contained by conventional cable shielding methods as shown in figure 1-8, but the magnetic field poses serious problems. Power cables carry large currents and voltages and as a result, are surrounded by strong electromagnetic fields. It is therefore necessary to provide exotic shielding or to separate all power supply cables from the sensitive transducer circuits. These circuits must also pass through hull penetrators which do not service the power circuits. For this reason, separate penetrator designs are recommended to keep the offending circuits separated. However, time sharing can also be considered. If circuit A and circuit B mutually interfere with each other when operated simultaneously but in actual practice are never operated together, they can occupy the same penetrator satisfactorily. Electrical interference has been a recurring problem on all DSVs fabricated to date. See reference 3 for additional data on electrical interference.

1.3 SYSTEM INTERCONNECTION CONSIDERATIONS

Having proceeded to this stage in the design cycle, the engineer can now devote his attentions to the pressure-proof connectors, penetrators and harnesses which interconnect the entire electrical system on the DSV. One point which cannot be overemphasized is the need for the system engineer to insist on having electrical connectors located at the outboard components and at the hull penetrators. Also, one basic type of design should be used on all of these components. One

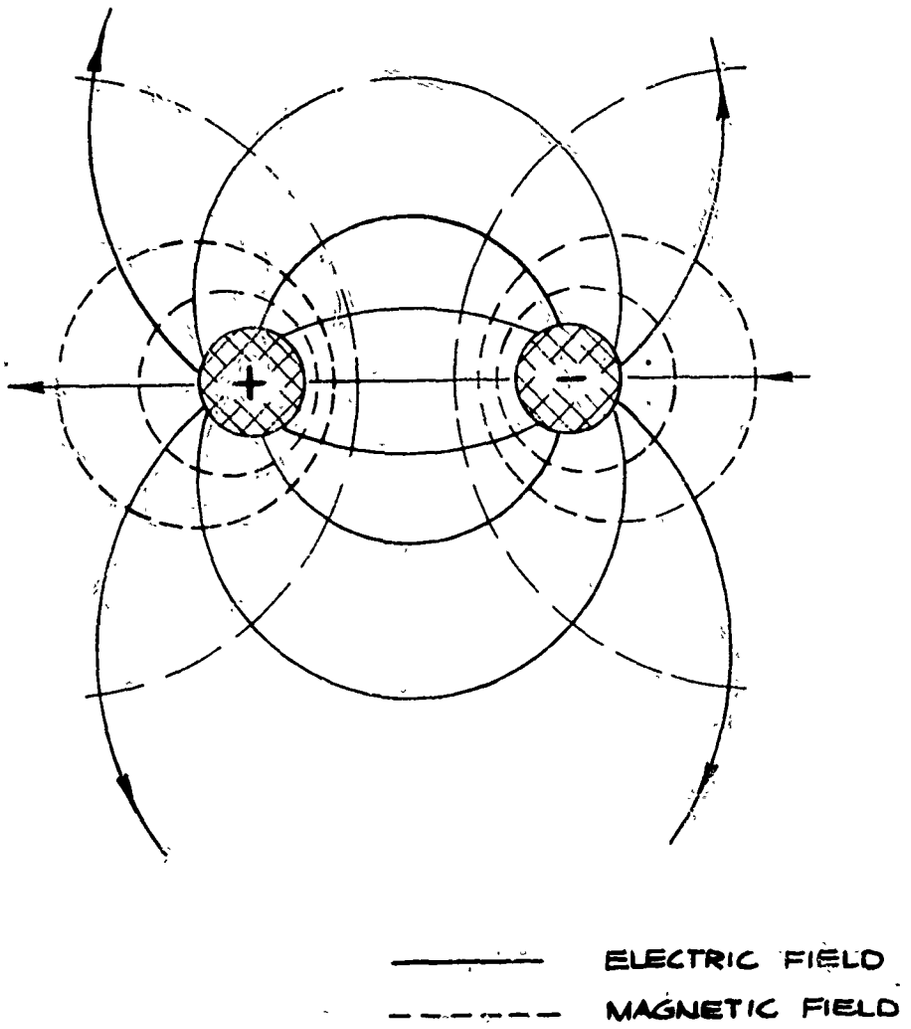

Figure 1-7. Fields Between Two Conductors

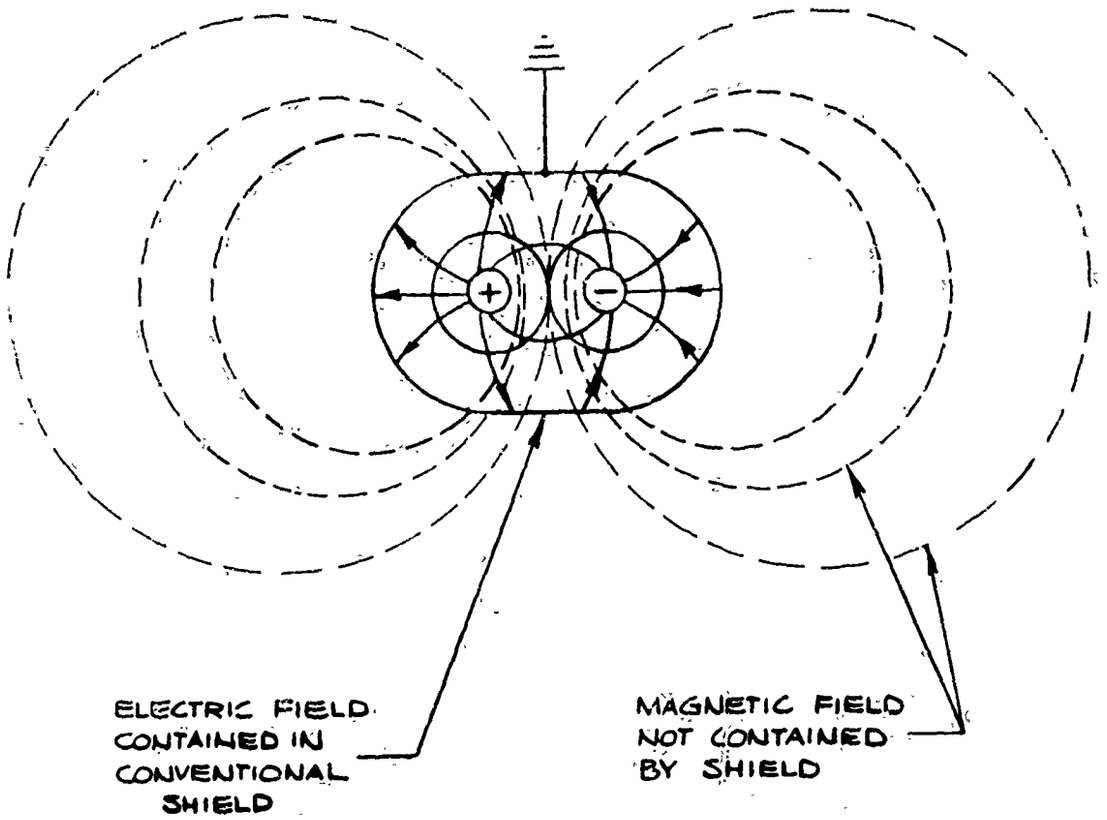

Figure 1-8. Shielding Of Fields

design type is recommended to facilitate fabrication of harnesses, and the logistics problems which arise during fabrication and subsequent maintenance of the vehicles.

Electrical connectors are required outboard on DSVs to:

a. Provide an interface between the electrical/electronic component manufacturer and the vehicle manufacturer (or the user.)
b. Provide a convenient and necessary electrical test point for the component during various stages of manufacture, testing, installation and maintenance.
c. Allow proper packaging of the electrical component for handling, packing, shipping, storage and installation.
d. Eliminate the need for the component manufacturer to provide the electrical cable to a distant, unknown junction point on the DSV.
e. Provide a proper interface for maintenance and replacement of electrical components and harnesses.
f. Provide a proper interface between components in a complex outboard electrical system.
g. Facilitate the manufacture, handling, and assembly process of components.
h. Provide for the pressure-proof hermetic sealing of an electrical component.
i. Facilitate the hydrostatic pressure testing of outboard electrical components and penetrators.

The following sections are devoted to the design of electrical hull penetrators, component connectors, and outboard harnesses which make up a large part of the DSV electrical distribution system.

Section 1

REFERENCES

1. Haworth, R. F. et al. Final Report - Phase I Review, Design, Fabrication and Test Program For Deep Submergence Electrical Connectors and Penetrators. Electric Boat Division Report No. C413-70-016 (C), 3 Volumes, May 1970.

2. Haigh, K. R. "Instrumentation Interference in Submersibles," 6th Annual Marine Technology Society Meeting, Washington, D.C., June 29-Jul 1, 1970.

3. Behr, S. et al. Handbook of Electric Cable Technology for Deep Ocean Application, U.S. Naval Research and Development Laboratory, Annapolis, Md., November, 1970.

Section 2

TABLE OF CONTENTS

Section	Title	Page
2.1	Penetrator Configuration	2-1
2.2	Penetrator Types	2-1
2.2.1	Single Connector Penetrators	2-1
2.2.2	Multiple Connector Penetrators	2-2
2.2.3	Potted and Molded Cable Penetrators	2-2
2.2.4	Through Cable Penetrator with Cable Grommet Seal	2-2
2.2.5	Through Cable Penetrators with O-Ring Cable Seals	2-6
2.3	Penetrator Design Recommendations	2-8
2.3.1	Penetrator Class	2-8
2.3.2	Penetrator Design	2-9
2.4	Penetrator Design Parameters	2-12
2.4.1	Configuration	2-20
2.4.2	Cable Entry Configurations	2-20
2.4.3	Size	2-20
2.4.4	Fastening - Penetrator to Hull	2-22
2.4.5	Sealing - Penetrator to Hull	2-22
2.4.6	Hull Insert Types	2-26
2.4.7	Insulation and Conductor Seal	2-29
2.4.8	Flexibility - Design	2-30
2.4.9	Material Selection	2-31
2.4.10	Safety	2-32
2.5	Junction Box Design Parameters	2-32
2.6	Summary	2-37

PRECEDING PAGE BLANK - NOT FILMED

Section 2

LIST OF FIGURES AND TABLES

Figure	Title	Page
2-1	Through Cable Penetrator with Grommet Cable Seals	2-3
2-2	Potted and Molded Electrical Penetrator	2-4
2-3	Single Connector Penetrator	2-5
2-4	Multi-Connector Penetrator	2-6
2-5	Through Cable Penetrator with O-Ring Cable Seal	2-7
2-6	Recommended Dot Program Modular Design Hull Penetrator (Exploded View)	2-10
2-7	Recommended Modular Hull Penetrator for 0-20,000 Foot Operating Depth	2-11
2-8	Long Contact Glass Sealed Penetrator	2-13
2-9	Junction Box Internal Wiring Method -- Internal Plug Assemblies	2-14
2-10	Recommended 0-20,000 Foot Modular Design Penetrator and Attached Junction Box with Wiring Preform	2-15
2-11	Penetrator with Halo Cables Support Device	2-16
2-12	Typical Penetrator Cable Entry Considerations	2-21
2-13	Penetrator Envelope Dimension Development	2-23
2-14	Penetrator to Hull Fastening Methods	2-24
2-15	Penetrator to Hull Sealing Methods	2-25
2-16	Typical Hull Inserts for Electrical Penetrators	2-27
2-17	Depth-Weight-Material Analysis of Multiple Connector Type Hull Penetrator	2-28
2-18	Elastomeric Molded Type Junction Box	2-34
2-19	Polywheel Junction Box Design	2-38

Tables	Title	Page
2-1	Electrical Penetrator Design Factors	2-17

Section 2

ELECTRICAL PENETRATOR DESIGN

2.1 PENETRATOR CONFIGURATION

The primary function of an electrical penetrator is to pass electrical power or signals through the pressure hull of the vehicle. The penetrator must be designed to seal and insulate the conductors as they pass through the hull. They must also be designed to preserve the watertight integrity of the pressure hull at all times. The hull integrity must be preserved despite possible outboard harness damage and short circuit fault current conditions in the electrical circuitry.

Electrical hull penetrators are one of the most critical design components on DSVs. Mechanical failure of an electrical penetrator at depths could result in the loss of the vehicle.

The following five basic penetrator designs are in use on DSVs:

a. Single connector penetrator. (reference 3)
b. Multi-connector penetrator. (reference 4)
c. Potted and molded cable penetrator. (reference 2)
d. Through cable penetrator with grommet cable seal. (reference 1)
e. Through cable penetrator with O-ring cable seal. (reference 3)

It is recommended that the selection of single and multi-connector penetrators be used on all DSVs. The principal reasons for this recommendation is that the connector type penetrator provides a needed harness disconnect point at the outboard side of the pressure hull, and the primary and secondary penetrator conductor seals can be tested for pressure integrity prior to installation on the vehicle. A connector type penetrator provides a positive, testable water barrier which is not dependent on outboard cables to provide a seal. The following paragraphs explain and amplify the types of penetrators used on vehicles and the advantages and disadvantages associated with the use of each basic design.

This section is primarily devoted to the design parameters associated with the connector type penetrators as this design is the one recommended.

2.2 PENETRATOR TYPES

The following is a brief discussion of the five basic penetrator types used on underwater vehicles.

2.2.1 SINGLE CONNECTOR PENETRATORS -- The predominance of penetrators used on DSVs today are the single connector type. The single connectors contain from two to over fifty contacts. Usually one large cable runs from a plug mounted to the penetrator to a distant distribution or junction box. See figure 2-3.

In general, this type of penetrator is more suited to the small tonnage vehicles where space outside the pressure sphere is at a premium. For example, in many vehicles the electrical penetrators must be located around the circumference of the window hull insert. Available space around the windows, both inboard and outboard is very limited. Therefore, single connector penetrators are used. This type of penetrator design is discussed at greater length further on in this section.

2.2.2 MULTIPLE CONNECTOR PENETRATORS -- In sheer numbers, there are more multiconnector penetrators in use today than any other type. These penetrators are primarily used on attack and FBM submarines. See figure 2-4. Properly designed, the penetrator allows a large number of wires to pass through a minimum sized hole in the hull. The design also allows connectors to be used outboard at the penetrator for each cable harness running to the penetrator. The penetrator also allows the use of a connector directly inboard of the penetrator body. In addition, the penetrator assembly can be hydrostatically pressure-tested prior to installation on the vehicle. The disadvantage of this type of penetrator is the relatively high initial cost.

2.2.3 POTTED AND MOLDED CABLE PENETRATORS -- A potted or molded type penetrator is one in which the conductors or cables are spliced or terminated to a header inside the penetrator body. The cables are then sealed to the penetrator body with a potting compound or molded rubber. See figure 2-2.

The potted penetrator design usually has a cost advantage in that it is less expensive to fabricate the penetrator assembly when compared to a single or multiconnector type. It has disadvantages in that test points are not readily available outboard of the pressure hull, and the conductor seals inside the penetrator body cannot be pressure tested once fabricated. The resulting assembly then consists of a penetrator with long lengths of outboard and possibly inboard cable which is more susceptible to damage at installation. It may also be more difficult to test the entire harness assembly prior to installation. Another major drawback is that should a cable be damaged in service and water run through the cable to the penetrator body, the entire assembly may have to be scrapped.

2.2.4 THROUGH CABLE PENETRATOR WITH CABLE GROMMET SEAL -- The through cable penetrator with cable grommet seal involves the pressurization of the rubber grommet packing material against the wall of the stuffing tube and the cable. See figure 2-1. An initial cable seal is formed when the packing is pressurized with the use of the gland nut; generally, this grommet pressurization by the gland nut caused a fairly high local loading on the cable. The pressure on the rubber grommet is increased with the subsequent increase in hydrostatic pressure as the vehicle descends to its assigned depth. To function properly, this type of penetrator requires a well designed outboard cable. The cable must be internally watertight, that is, the conductor strands and cable interstices must be filled with a mastic or elastomeric compound to prevent water passage through the internals should the cable be damaged in service. In addition, the cable must be designed to withstand the local loading applied by the grommet. The dimensional tolerances on this type of cable must be closely controlled.

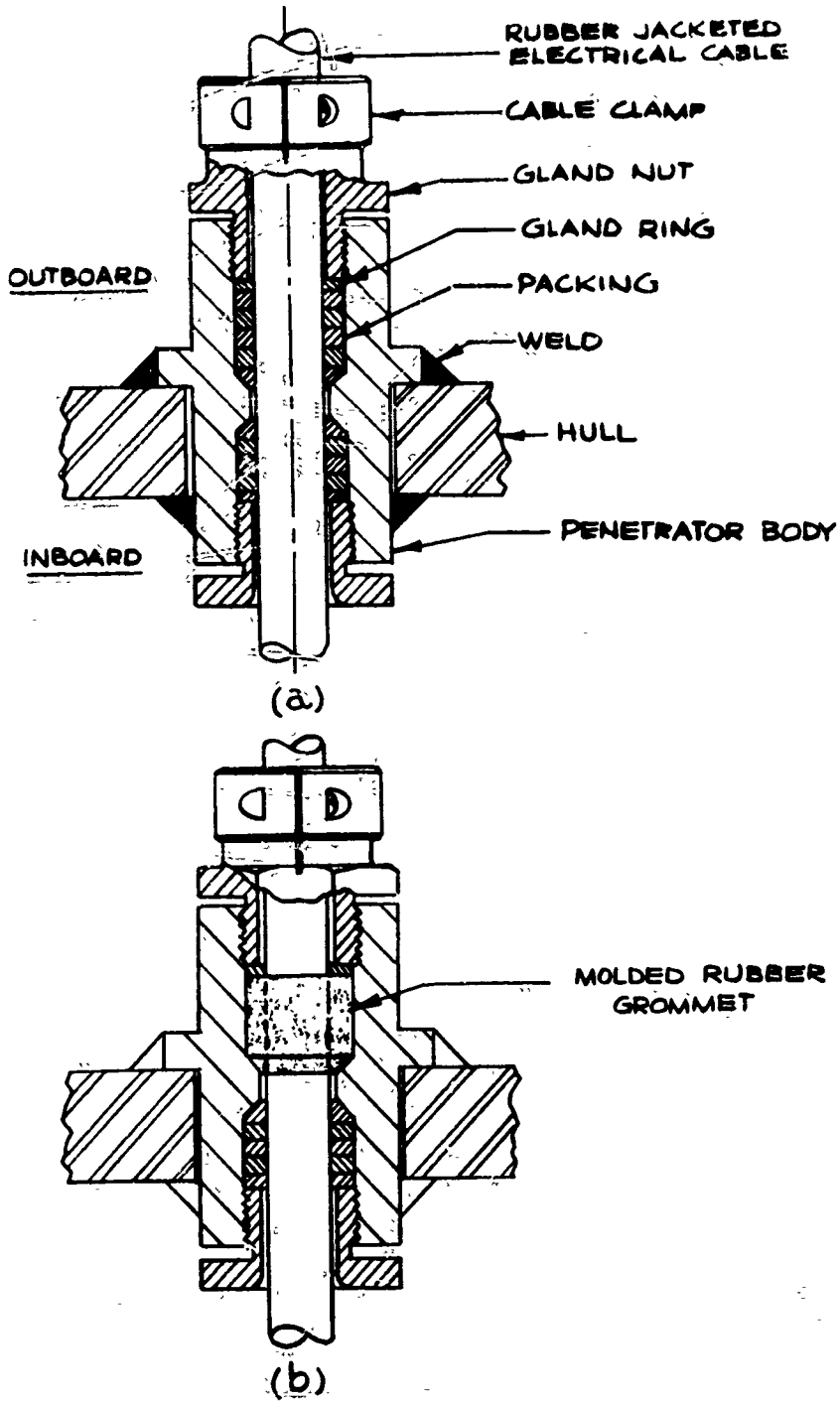

Figure 2-1. Through Cable Penetrator with Grommet Cable Seals

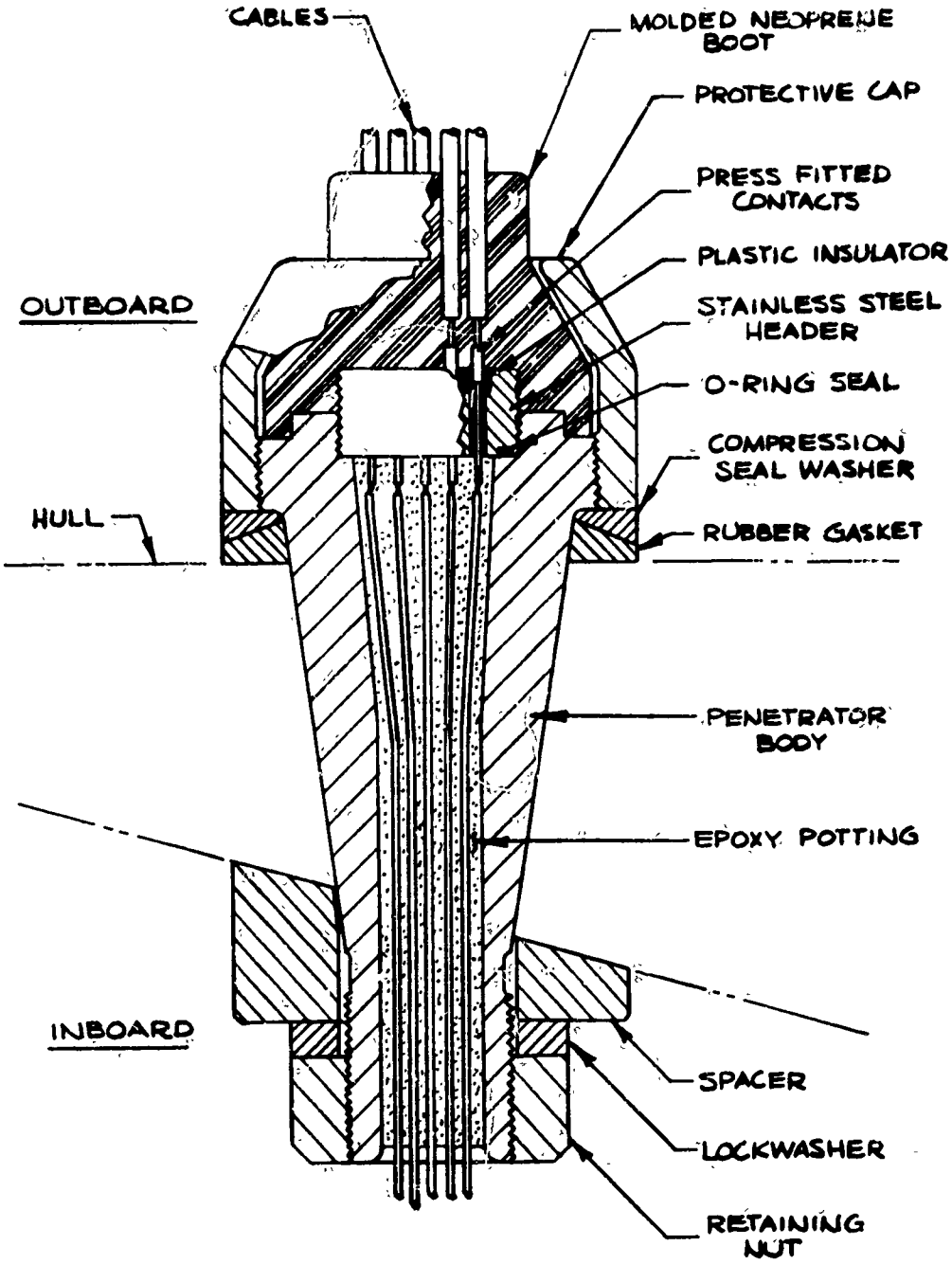

Figure 2-2. Potted and Molded Electrical Penetrator

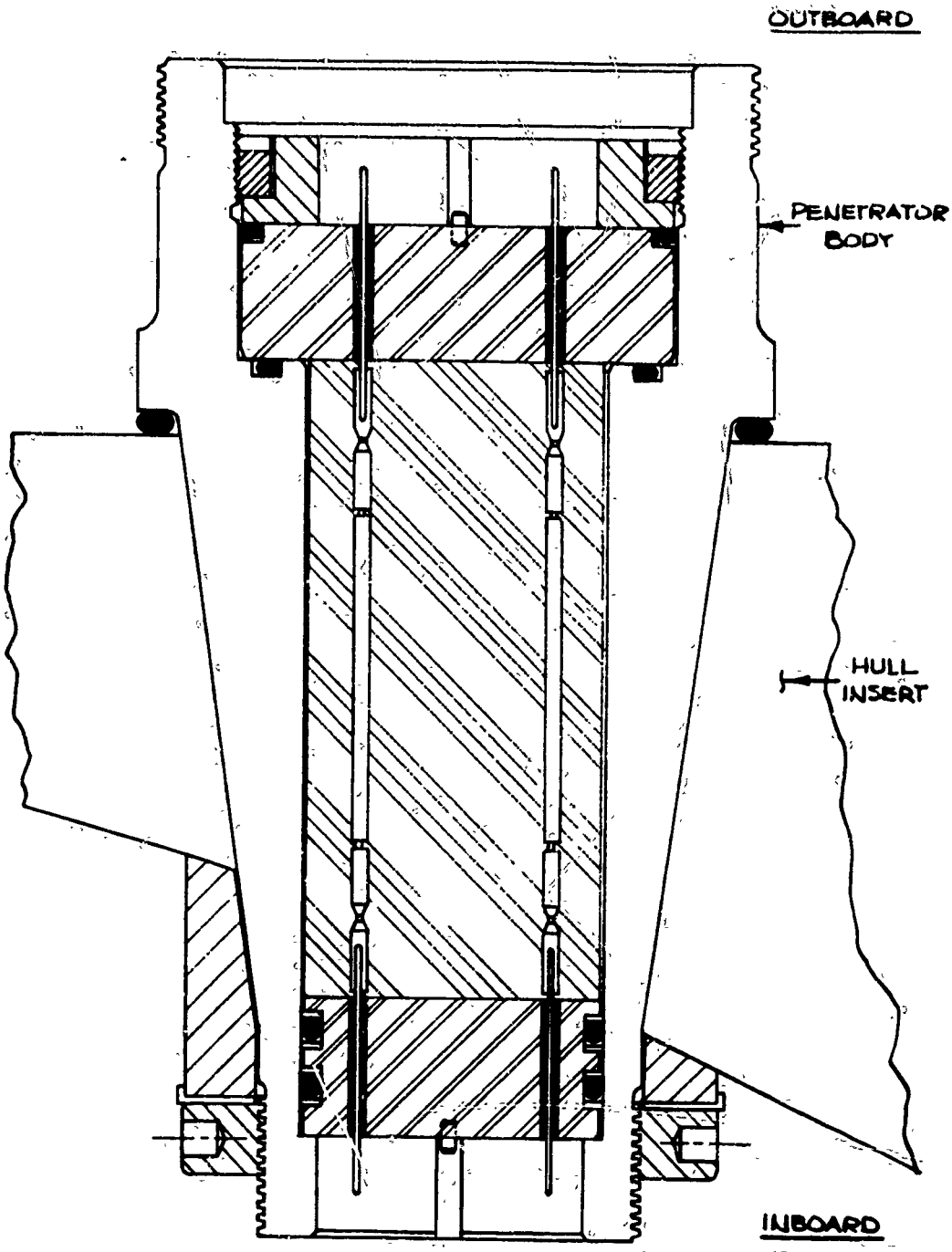

Figure 2-3: Single Connector Penetrator

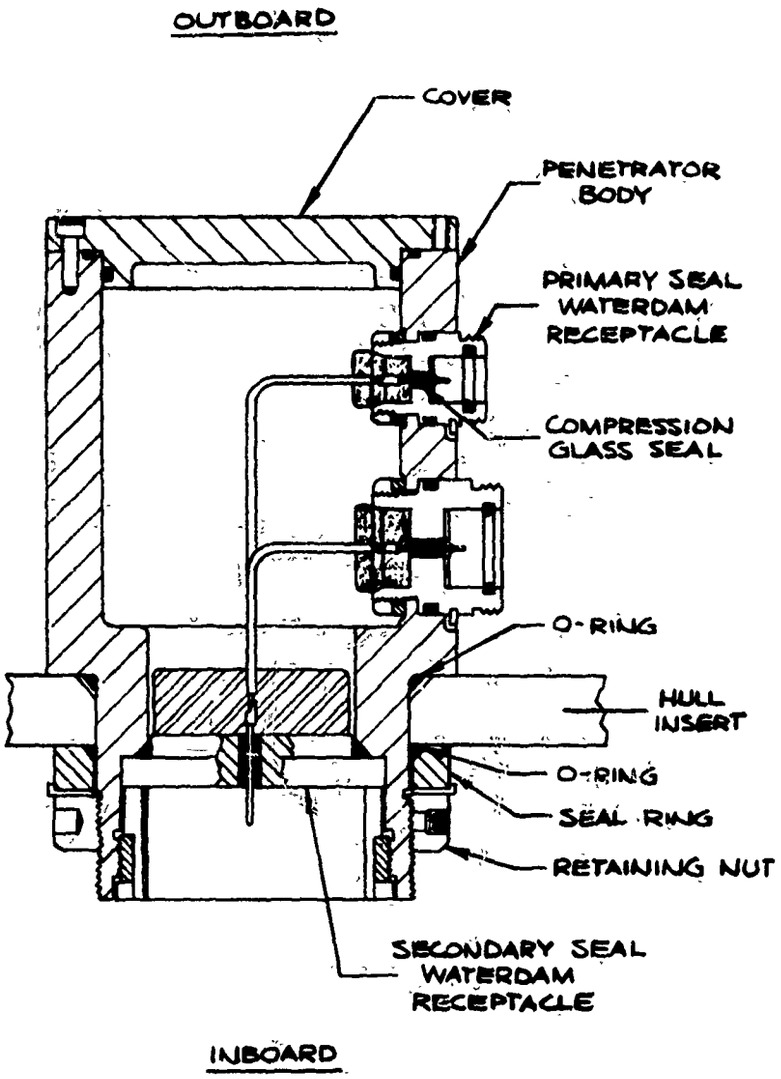

Figure 2-4. Multi-Connector Penetrator

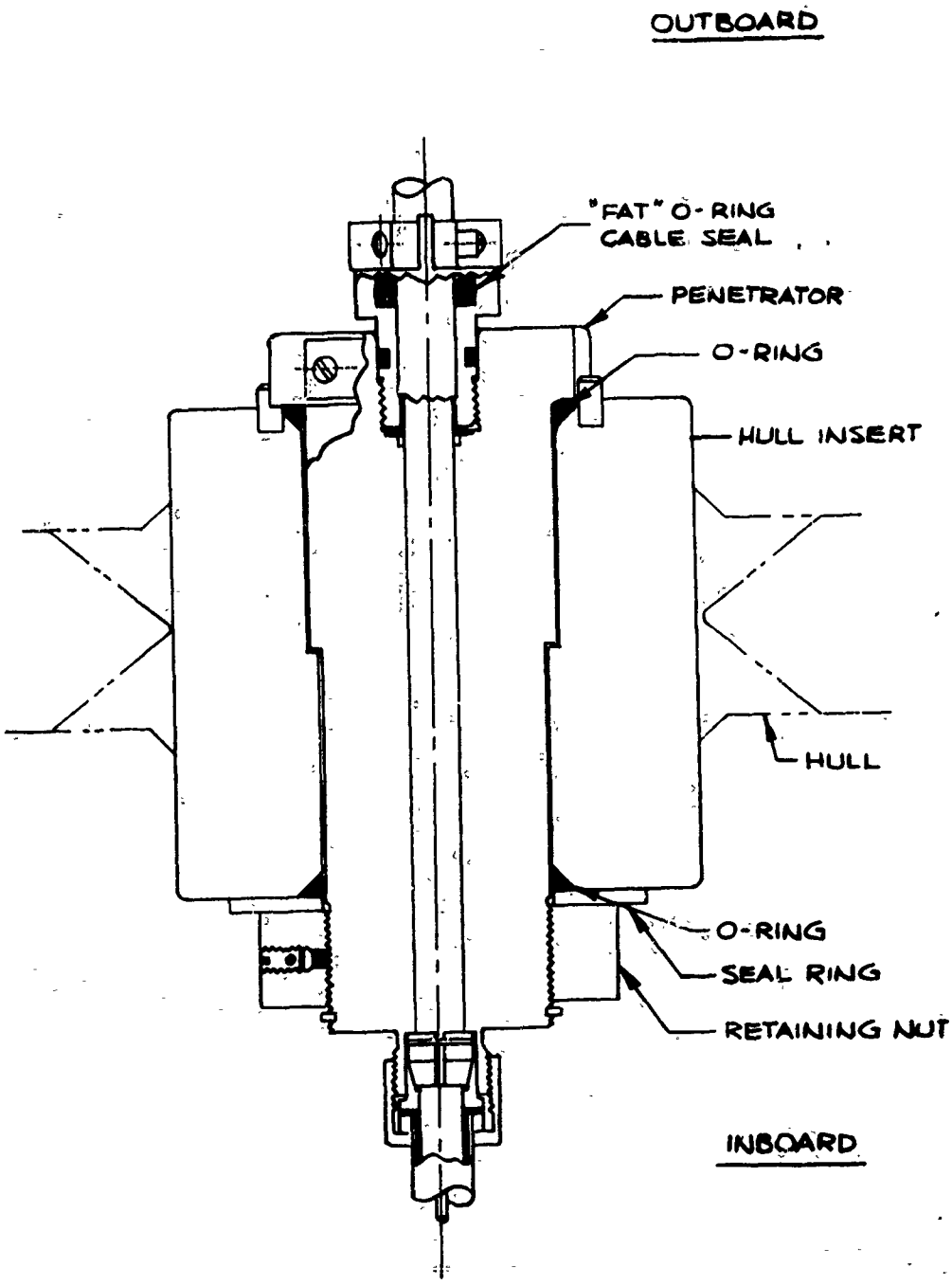

Figure 2-5. Through Cable Penetrator with O-Ring Cable Seal

The advantages of this penetrator include low comparable costs and a noninterruption of the electrical circuitry as is required with the use of a connector. Regarding the limitations of this jam-type cable seal, the installer must determine the proper amount of pressure to apply with the gland nut so as not to damage the cable and conductors and yet enough pressure to prevent inward cable movement when the penetrator is subjected to hydrostatic pressure. The rubber grommet packing may also require repressurization occasionally to compensate for the compression set of the rubber grommet and the cable jacket material cold flow. In this design, the grommet seals the cable and prevents the cable intrusion into the vehicle. A cable clamp can also be placed outboard to prevent cable intrusion. Cables with a diameter of 5/8 inch have been used with this type of fitting. Cables with larger diameters have made use of the grommet cable seals in conjunction with cable shear valves. Stuffing tubes are used in the shear valves to seal the cable; but should the outboard cable be damaged in service, the valve handle located inboard is turned and it activates a cylindrical knife which cuts the cable and seals the cable hole located in the valve. The limitations of this design include large penetrator size and considerable weight as well as the requirement for manual operation should a cable failure occur.

Shallow depth, low cost vehicles have used the grommet penetrator cable seal. However, the present state of the art in penetrator designs does not necessitate the further use of this type penetrator on shallow or deep submergence vehicles.

2.2.5 THROUGH CABLE PENETRATORS WITH O-RING CABLE SEALS -- The O-ring sealed cable penetrators have been designed by the U.S. Navy Underwater Sound Laboratory (now U.S. Navy Undersea Systems Center) for use on submarine radio frequency systems. See figure 2-5. These systems usually require coaxial type cables, and as these solid conductor polyethylene dielectric cables are quite rigid, NUSC engineers found that they could seal these cables with oversize O-rings. The polyvinyl chloride jacketed cable does relax and cold flow with time, temperature and pressure, but not sufficiently to eliminate the initial pressurization of the fat O-ring. In a sense, this design is similar to the pressurized grommet. However, the initial rubber pressurization is achieved at installation through interference fits as opposed to pressurization of the rubber grommet with a gland nut and generally is of much lower initial pressurization than is necessary for a grommet seal. The O-ring pressurization increases with the application of hydrostatic pressure.

The design noted above is strictly depth limited and can only be used with a most rigid construction cable (such as coaxial types).

2.3 PENETRATOR DESIGN RECOMMENDATIONS

2.3.1 PENETRATOR CLASS -- As noted earlier, electrical connector type penetrators are recommended for DSVs. Three classes of penetrators can be designed to satisfy the oceanic depths. These are 0-2000 feet, 0-20,000 feet and 0-37,000 feet. While the primary design work noted in this Handbook is devoted to the 0-20,000-foot operating depth, discussion is also centered

to a limited extent on the other two operating depths. Further design and investigating work in these depth classes will be conducted as the need arises.

Various types of electrical penetrators are required to satisfy the requirements of each DSV. These are as follows in the order of decreasing current carrying requirements:

a. Power
b. Control
c. Radio frequency
d. Signal

2.3.2 PENETRATOR DESIGN - 0-20,000 FEET -- As various connector type penetrator designs are evolved, it becomes apparent that a modular type penetrator can be designed to house all of the above functions in appropriate contact configuration, size and number. Figure 2-6 (exploded view) illustrates this conclusion. The modular or building block concept is highly desirable because one envelope (with proper adapting internal parts) can satisfy all electrical functions penetrating the hull of a submersible. Most of the component parts would be identical for all functions. One hull hole size would be standardized with no need for varying size or configuration.

Contacts and contact housing components are the only variables in the entire design. The improvement on reliability, logistics and reduction in cost is an added benefit. The modular construction offers the required flexibility for an efficient system alteration, or change to an entirely new one. The internal dimensions of the penetrator shell make efficient use of space in accommodating 3 number 0, 48 number 16, 85 number 20, or a coaxial contact with signal contacts.

The design could be used at all lesser operating depths, but for greatest efficiency in terms of weight and cost, the design would be most appropriate for 2,000 to 20,000-foot depths. The modular configuration consists of a penetrator shell section which houses compression glass sealed male contacts. The shell has male threads at the outboard and inboard ends for attaching plugs or adapting items such as a multi-connector junction box outboard or a standard type junction box inboard. The penetrator shell is shouldered outboard, providing a seal area adjacent to the hull. The external threads on the inboard end also provide for fastening to the hull by a retainer nut. Where a multi-connector junction might best serve in a signal or control function, the outboard plug is replaced by a penetrator junction box for containing wiring and mounting up to ten receptacles. The junction box uses the same threads as the plug and has a positive locking device to prevent inadvertent removal. The junction box is provided with an access cover, which threads into the junction box shell. The cover is sealed by an O-ring face seal and an O-ring radial seal. The shell is pentagonal in outer section and has a cylindrical bore.

The hull penetrator shell configuration used in this modular design allows for two internal wiring approaches, as follows:

a. Two compression glass sealed male contact headers, double O-ring sealed and secured by threaded retainer sleeves in contact with polarizing rings. These headers are interconnected by a potted wiring preform terminated with socket contacts. (see figure 2-7).

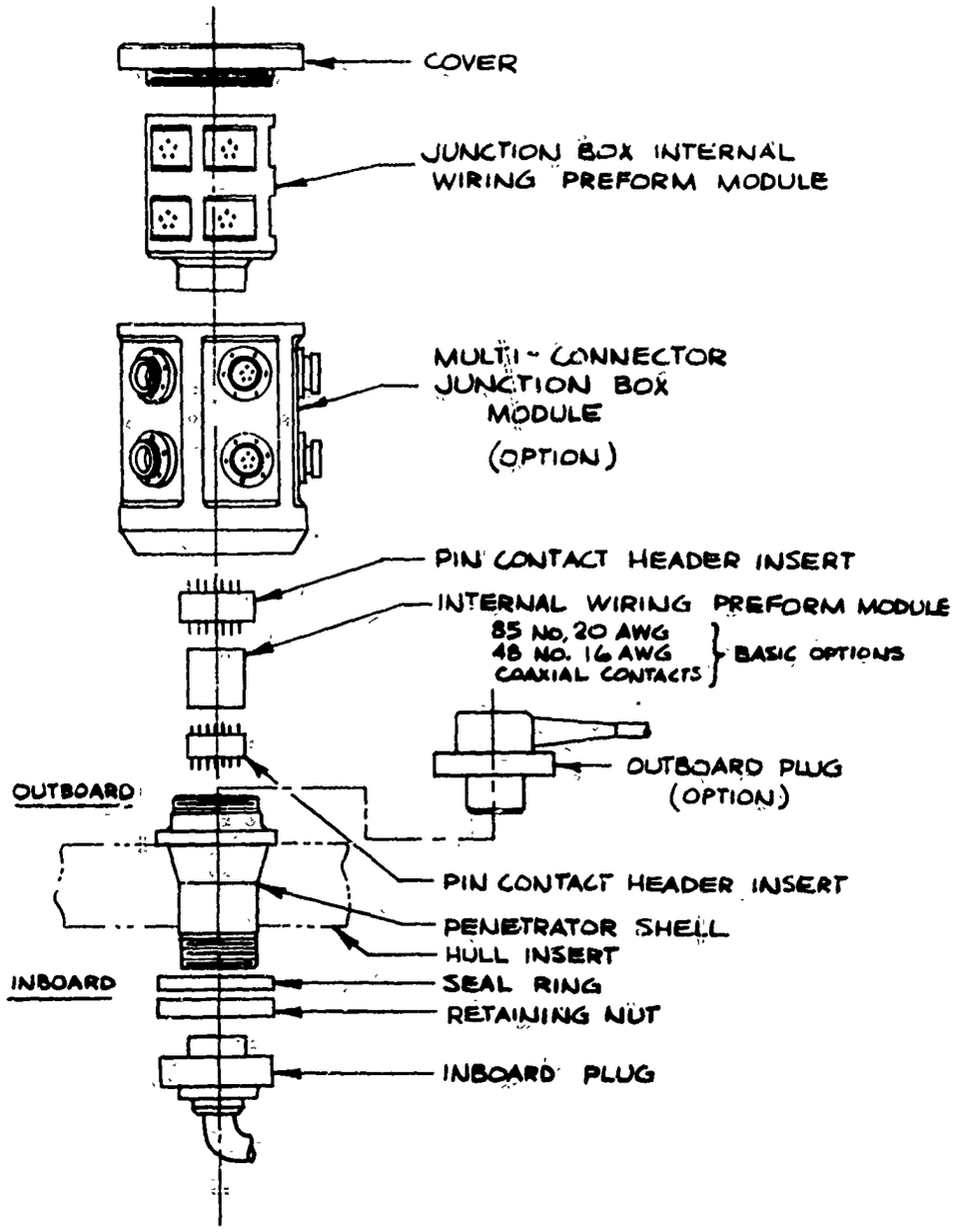

Figure 2-6. Recommended Dot Program Modular Design Hull Penetrator (Exploded View)

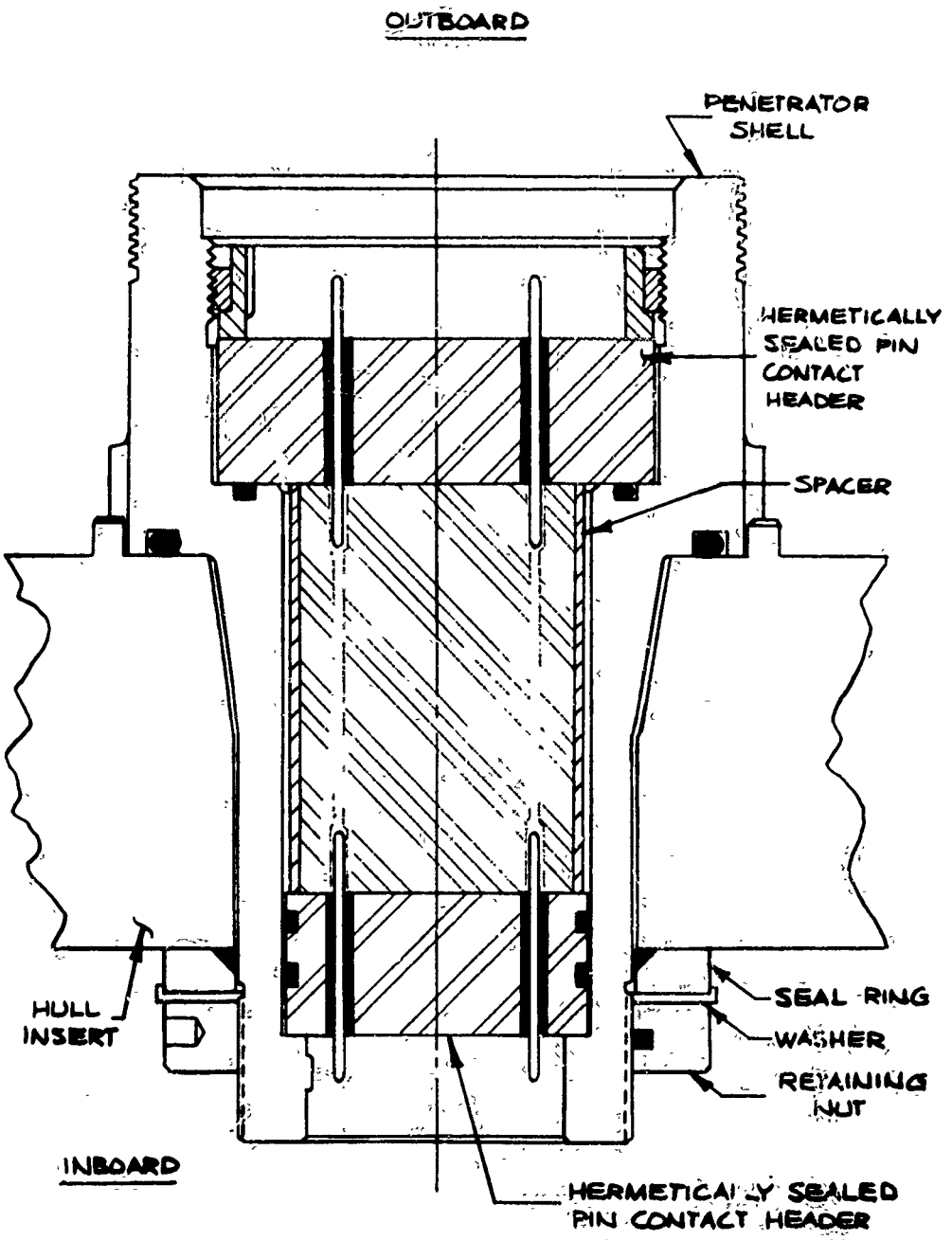

Figure 2-7. Recommended Modular Hull Penetrator for 0-20,000 Foot Operating Depth

b. A one-piece shell construction containing long male contacts extending between inboard and outboard socket contact engaging levels. The contacts are individually compression glass sealed for their entire length or at inboard and outboard levels (see figure 2-8). This design is far superior from a functional point of view because it eliminates four O-ring seals and two electrical interfaces, and presents a continuous water dam extending the entire length between inboard and outboard faces.

The inboard electrical connection for the penetrator is accomplished by a plug, conventional in all respects, except seals and mass. Being inboard, it only requires environmental type seals and is constructed with less emphasis on strength and continuous corrosion resistance in a sea water environment. A potted cable end seal provides the required cable strain relief at the plug.

Wiring of the multi-connector junction box penetrator can be accomplished by one of two methods. One method uses a prefabricated wiring assembly with individual internal plugs which connect to the back of the receptacles. This would look much like the assembly shown in figure 2-9. The other method employs a complete cavity filling wired preform which slides into place through the top opening in the junction box shell, (see figure 2-10). The bottom surface of this preform engages (by socket contact) the header pin contacts, located in the penetrator shell. Socket contact locations around the periphery engage the pin contacts of the individual receptacles. These preforms are cylindrical in shape with flats at each receptacle interface area. The preform is sized for a slight interference fit and cast from a low durometer material such as silicone rubber. This approach facilitates wiring of the junction box and enhances its electrical reliability because all conductors can be properly spaced and located, and their relative position remains constant throughout the life of the penetrator. Wiring is completed by inserting a double O-ring sealed receptacle into each body hole and securing it with cap screws. This receptacle has male contacts projecting from the back (engaging end) and is otherwise conventional, and mates with a conventional type plug described in other sections of this Handbook.

The cylindrical preform method of wiring is recommended because it does away with time consuming blind assembly methods and adds significantly to overall reliability. This method has a further advantage in that it permits wiring of a much smaller diameter body cavity, thus reducing the overall space envelope and weight.

Outboard cable strain relief and protection peripheral to the multi-connector junction box shell is afforded by a halo like device. This device is a split clamp-on type with a circular channel for securing the cable as it exits from each plug. See figure 2-11.

2.4 PENETRATOR DESIGN PARAMETERS

The design of an electrical hull penetrator, as with the design of any component, requires the consideration of many design factors. These are listed on table 2-1.

The following paragraphs deal with the design of electrical connector type penetrators recommended for use on DSVs.

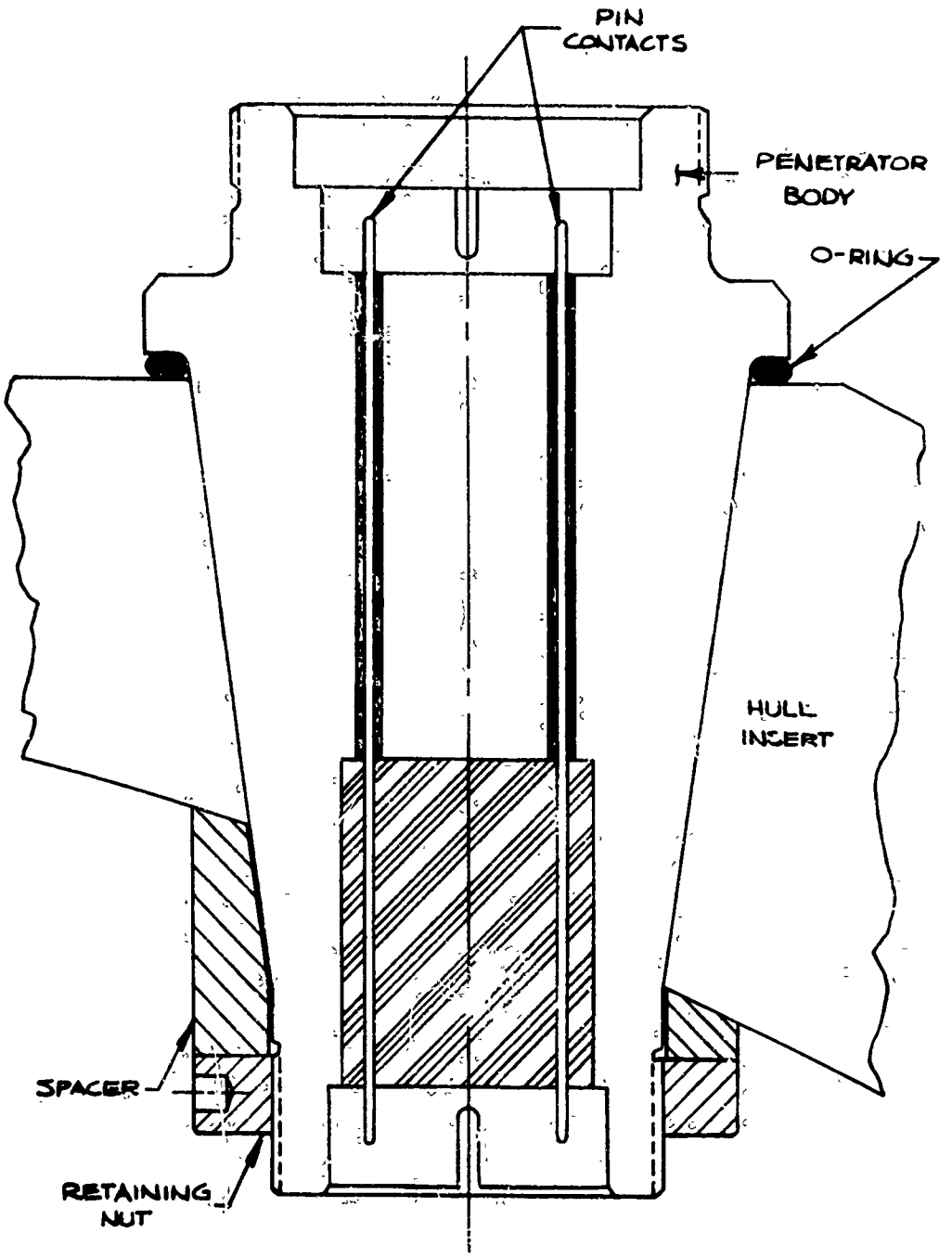

Figure 2-8. Long Contact Glass Sealed Penetrator

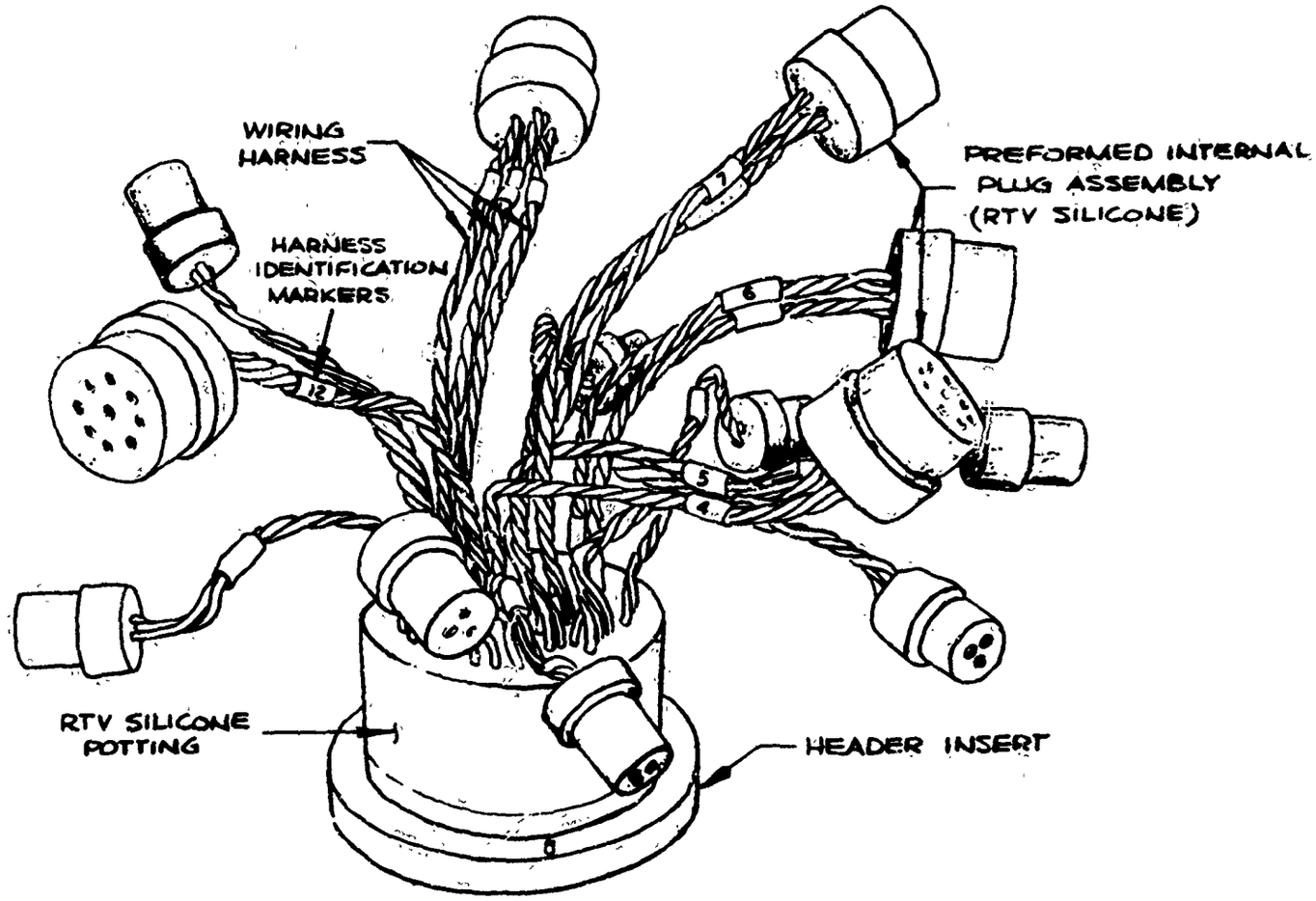

Figure 2-9. Junction Box Internal Wiring Method -- Internal Plug Assemblies

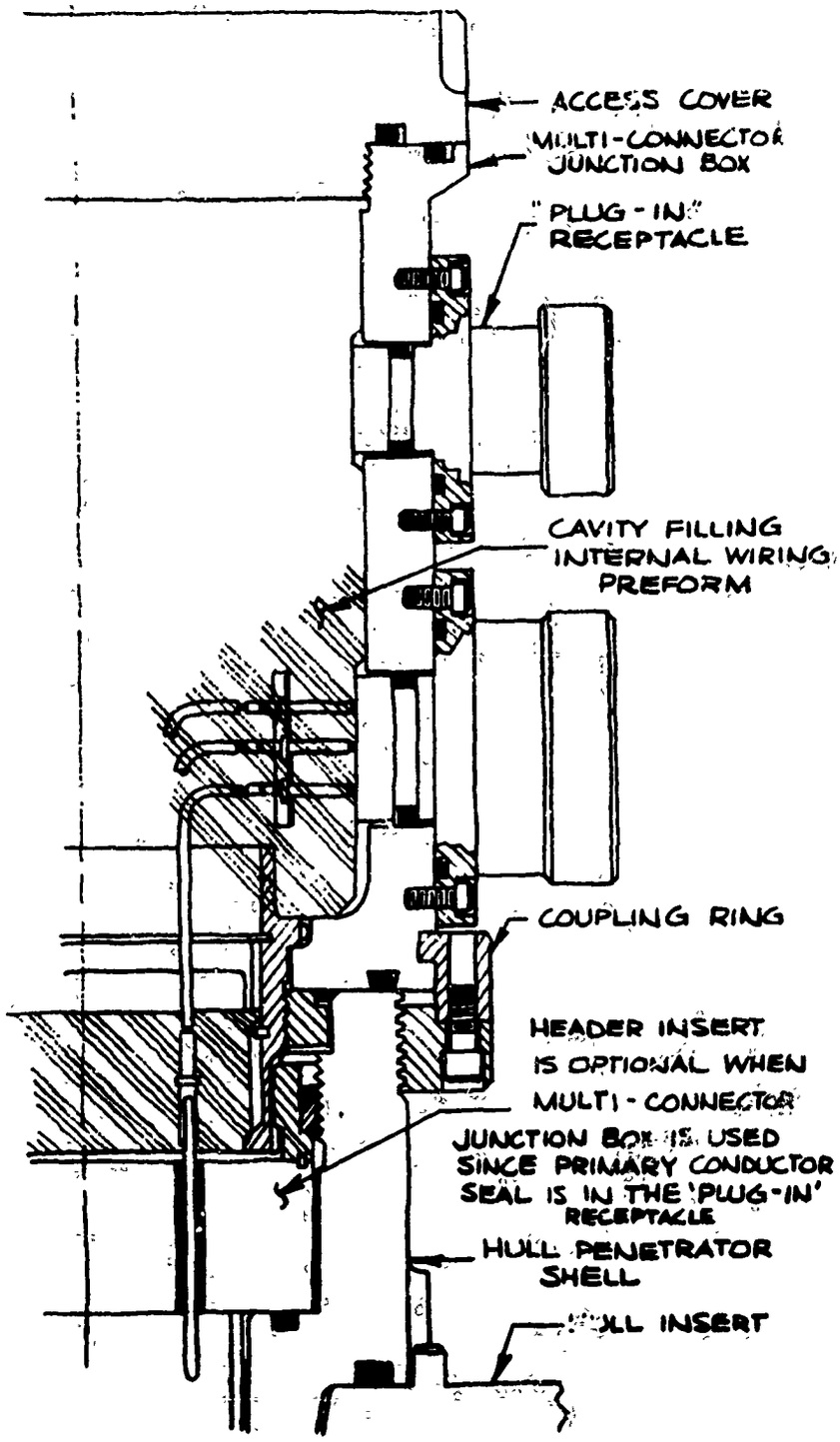

Figure 2-10. Recommended 0-20,000 foot Modular Design Penetrator and Attached Junction Box with Wiring Preform

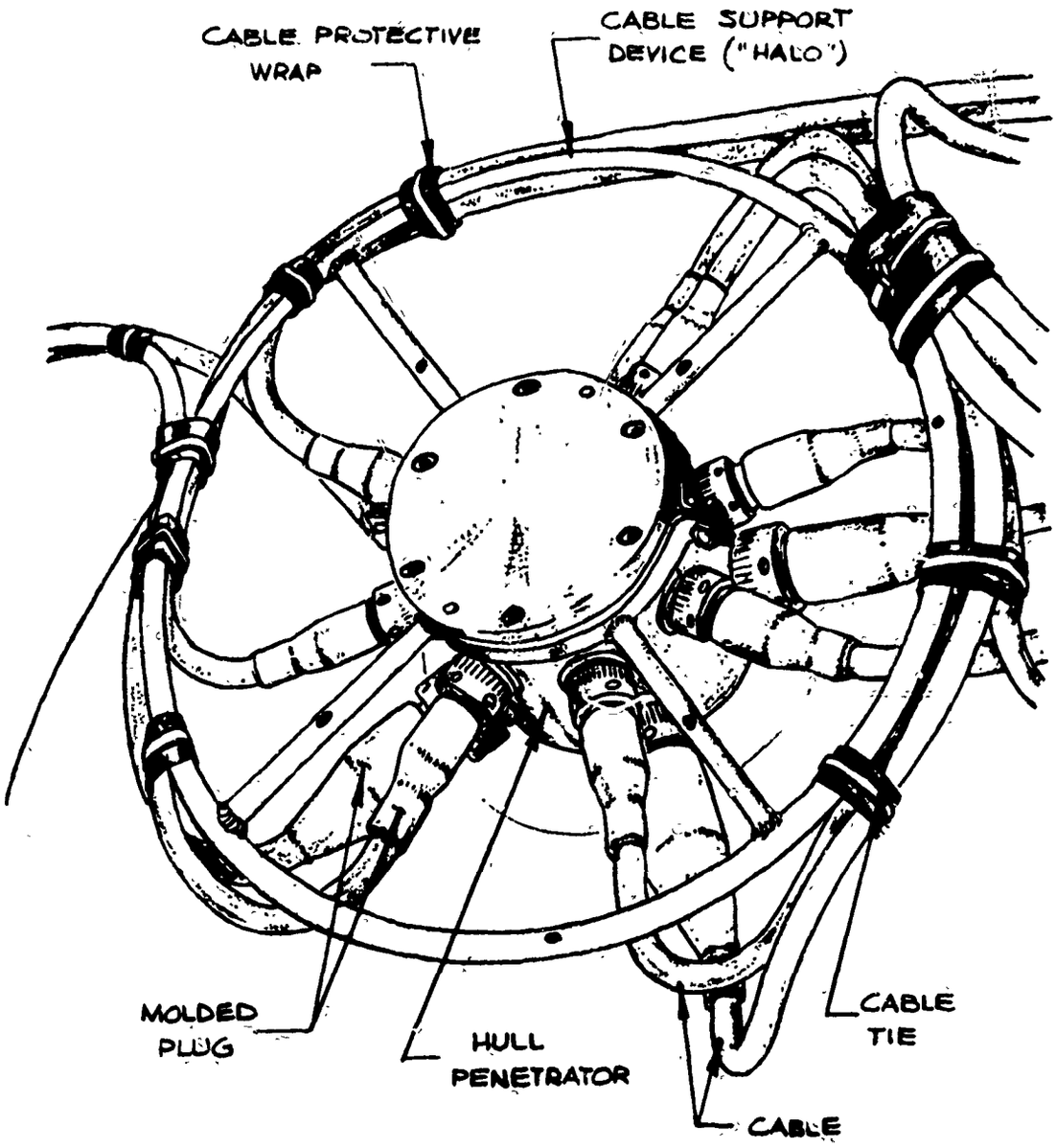

Figure 2-11. Penetrator with Halo Cables Support Device

Table 2-1. Electrical Penetrator Design Factors

1. Configuration
2. Cable Entry Configuration
3. Size
4. Fastening - Penetrator to Hull
5. Sealing - Penetrator to Hull
6. Hull Insert Type
7. Insulation and Seal - Conductor
8. Flexibility - Design
9. Material Selection
10. Corrosion Properties
11. Fabricability
12. Safety
13. Strength
14. Stiffness
15. Thermal Properties
16. Cost

Together with basic design factors of table 2-1 there are many design considerations which strictly apply to electrical penetrators. Some of these considerations are as follows:

a. All penetrators, in order to preserve the necessary hull integrity in case of outboard cable damage, must have two positive water dams within their confines that will preclude water entering the pressure hull by coursing along the conductors. This applies unless it can be demonstrated that one contact seal has sufficient section such that it affords an equal degree of protection of pressure hull integrity. This barrier is best obtained by compression glass sealed contacts in all receptacle headers for deep depth applications.

b. There should be one redundant seal as a backup to the primary seal in all outboard openings in a penetrator shell. These would include openings for access covers and receptacle entry holes. The exception would be where a structural sealing weld is used.

c. There should be one redundant seal as a backup to the primary seal between the penetrator and hull. This applies unless it can be demonstrated that one seal has sufficient section, that it affords an equal degree of pressure integrity protection, such as a structural weld.

d. Materials and configuration should provide inherent resistance to fault current damage that would effect hull integrity.

e. Materials and configuration should provide inherent resistance to electrolytic corrosion resulting from stray leakage current. Very slight differences in potential can erode relatively thick metal sections in a very short period of time, thus impairing hull integrity.

f. The possibility of a critical degree of galvanic coupling must be considered when making a material choice for the penetrator shell. Surface contours and areas that interface with the hull should be such as to prevent entrapment of salt water which concentrates and contributes to crevice corrosion. Where these areas do occur, they should be kept at a minimum by proper location of sealing gaskets. Areas that remain should be filled with a mastic sealant. It is imperative that the method of mounting the penetrator to the hull provide good electrical continuity with the hull. The hull is normally the anodic member of the electrical couple, thus affording the penetrator a high degree of protection from corrosion.

g. The method of securing the penetrator to the hull should also provide for its easy removal. If this is accomplished by an inboard locknut, the penetrator must be provided with a torque lock which properly orients the penetrator and prevents rotation on its seals during torquing of the locknut. The locknut should be provided with an integral locking device to prevent loosening.

h. Unless the particular system being serviced precludes an electrical disconnect, the inboard end of the penetrator should be provided this feature. A connector at this point provides a test point for checking outboard circuitry. It also greatly facilitates wiring and installation of the penetrator, doing away with a long run of wires or cable that must be threaded through small openings and constantly protected against damage during fabrication, shipment and installation.

i. Adequate wire or cable strain relief must be provided at the inboard end of the penetrator to prevent unwanted strain on seals and wire terminations within the penetrator, or terminations within a plug if a connector is used.

j. The overall design should be such that the penetrator can be completely hydrostatically pressure tested prior to installation. This should be done with all seal conditions identical to those at installation.

k. The configuration of the penetrator must be such that it can be easily wired without the need for time consuming or blind assembly procedures dictated by insufficient cavity or poor internal contour. This consideration has a most important bearing on electrical reliability of the penetrator.

l. The penetrator and its internal wiring must be designed to facilitate in the greatest possible manner any circuit repair or modification that may be required.

m. All wire terminations within the penetrator cavity should be sealed and supported. This combined moisture barrier and strain relief is readily accomplished by soft potting compounds.

n. Protection and means of securing outboard cables at the point of departure from the penetrator is most important for system reliability.

o. All outboard cable assemblies attached to the penetrator by means of a removable plug must have a positive water dam as close as possible to the plug receptacle interface, preferably in the nose of the plug. This prevents water from flooding into the receptacle from a damaged outboard cable, and causing extensive electrical damage if the circuit happened to be activated.

p. Any outboard electrical interface of a penetrator that can be inadvertently exposed to sea pressure should withstand a test pressure in the exposed condition of at least one and one-half times the operating pressure. Otherwise, hull integrity is jeopardized. Receptacles in which the contacts are compression glass sealed very effectively satisfy this requirement.

q. Electrical connector selection is a most important consideration, it is the one component most initially affecting penetrator reliability.

r. The ideal penetrator configuration provides for packaging a high conductor density in a minimum envelope having minimum projection from the hull.

s. Excess penetrator weight must be avoided. Any excess weight reduces the submersible's payload pound for pound.

t. The penetrator must be free of electrical (electromagnetic and electrostatic) and electro-acoustic interference for all conductors passing through the penetrators.

u. A leak detection system for the penetrator junction box should be considered.

w. The selection of materials and the design of the power penetrator should be such that flooding of the receptacle interface or of the penetrator internals through some casuality of an energized penetrator will not electrically burn its way through the seal(s) before the current protective devices de-energize the circuits.

2.4.1 CONFIGURATION -- Increased weight in penetrators brings about a loss of payload on submersibles. Therefore, size, configuration and material selection play an important part in the penetrator design. Penetrators are essentially pressure vessels subjected to external pressures. For this reason, they are cylindrical in shape. The diameter of the penetrator is held to an absolute minimum. Just enough space is provided to allow the cables to enter the hull, exit the penetrator, or allow the connectors to be mounted and wired. To date, most penetrators have been fabricated from K-Monel, high strength steels, type 316 stainless steel, 17-4 PH stainless steel and 7079T6 aluminum. Future penetrator designs will undoubtedly make use of Inconel 625, Hastelloy C, glass reinforced plastics, and Titanium. Material choice is made on the basis of compatibility between the hull and connectors, with other materials and corrosion resistance, yield strength, bulk modulus, weight, machinability and availability considerations. Penetrator configurations used in the past and at present are shown throughout this section.

2.4.2 CABLE ENTRY CONFIGURATIONS -- The cables can enter penetrators vertically, horizontally or at an angle. Cables that enter the fitting in a vertical position offer the least design advantages. For this design, cable protection becomes a problem, and it is necessary to bend the cable at a right angle in order to secure it to the hull before it enters the penetrator. The vertical cable entry also increases the overall size of the penetrator. For these reasons it is usually desirable to have the cables enter the penetrator horizontally. Thus, the cables can be protected and supported more easily and the overall penetrator package size is lessened. A number of configurations are shown in figure 2-12.

2.4.3 SIZE -- The overall diameter of the penetrator is primarily dependent upon two design factors:

a. Contact layout diameter
b. Penetrator shell thickness

The contact layout diameter is dependent on the size of contacts or wire used; the insulation over the contacts or wires; and the number of contacts or wires desired in the layout pattern. As the number of contacts increases, the overall diameter of the layout does not increase proportionately. For instance, 24 number, 16 size contacts can be located within a 1-1/4 inch diameter and 48 number 16 size contacts can be located within a 2-inch diameter layout.

The receptacle shell thickness is not strictly based on hydrostatic pressure considerations. Such design elements as seals and fastening methods must be considered in the design. As design layouts are made, it is seen that the shell thickness, for instance, of a 24-pin layout will be as large as that for a 48-pin layout. From this, it can be concluded that overall penetrator weight savings can be realized by using fewer penetrations having a higher contact density. Also, the overall

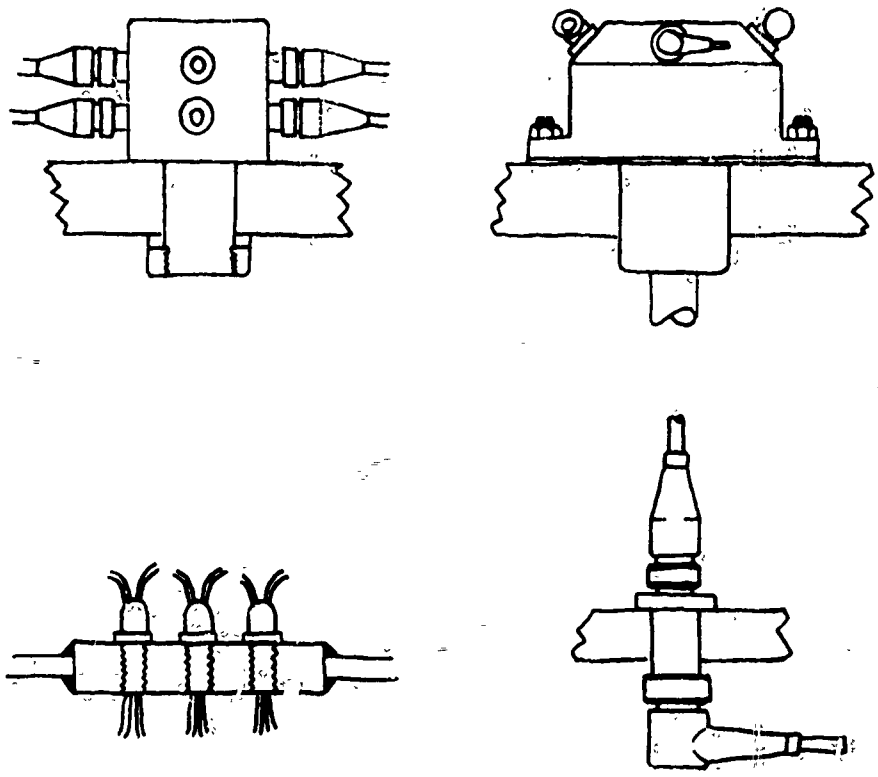

Figure 2-12. Typical Penetrator Cable Entry Considerations

penetrator envelope can be significantly reduced by using smaller sized contacts within the penetrator. For instance, 85 number 20 size contacts will occupy the same area as 48 number 16 size contacts. Figure 2-13 shows a typical penetrator envelope dimension development for various pin layouts.

2.4.4 FASTENING - PENETRATOR TO HULL -- This important penetrator design element is probably one of the least controversial design selection items. As seen in figure 2-14 there are many possible methods of attaching the penetrator to the pressure hull. However, since the early 1930's most designers have used an internally located lock nut to fasten the penetrator body to the hull. This design uses less space as compared to the flange bolted types. Several factors must also be considered when designing the fastening mechanism. They are cost, watertightness, ease of installation, ease of replacement, strength and safety. One of the simplest methods is screwing it directly into the hull. This design is not favored, however, as it is impossible to properly polarize the penetrator. Also, threading the hull poses machining and stress concentration problems. If a hull insert is used, threading is more practical but problems could also be introduced here due to distortion of the threads following insert welding into the hull.

As engineers are reluctant to bolt directly into the pressure hull due to the initiation of stress concentration areas the bolted flange method may require a hull insert. Also, the bolted flange penetrator consumes a larger surface area at the outboard side of the hull.

Adhesive fastening can be considered, but as yet the confidence level of this type of system, especially in a salt water environment, does not warrant its use at this time. The penetrator can also be fastened to the hull by weld. This also takes care of the penetrator to hull sealing requirement. While this type of design is very conserving of space, it is not recommended for DSVs, however, as the attachment is rather permanent (welds require grinding for removal), and this hampers replacement for maintenance and design changes. Also, problems sometime arise due to the need for performing bi-metallic welds. Some hull materials used in past years are not conducive to welding (7079 aluminum for instance). As a result of the above the use of the internal lock nut fastening methods is recommended.

2.4.5 SEALING - PENETRATOR TO HULL -- As noted earlier, the recommendation has been made to provide primary and secondary seals for the penetrator to the pressure hull. As seen in figure 2-15 there are many possible seal mechanisms to consider in sealing to the hull. Adhesive sealing is a possibility but is not strongly considered in this application due to the lack of available data of adhesive systems in a salt water environment, and the suggested requirement that the penetrator be easily replaced for maintenance, inspection and possible change if required as is often the case on a research vehicle due to mission equipment changes.

The penetrator could be sealed with a jam type flat gasket. However, this method is not recommended as this type of seal normally requires repressurization from time to time. The most positive method of sealing to the hull is welding. In this manner, a reliable seal is obtained. This type of seal is also rugged and not as apt to be damaged. However, as with adhesive type seals,

TYPICAL PENETRATOR DIMENSION DEVELOPMENT *

NUMBER OF 16 GAGE CONTACTS	PLUG INSULATOR DIAMETER	B DIA	C DIA	D DIA	E DIA	X	Y
3	0.48	0.63	1.13	1.13	1.88	0.62	0.25
5	0.60	0.82	1.37	1.37	2.12	0.65	0.27
9	0.74	1.06	1.59	1.59	2.34	0.63	0.26
14	0.95	1.31	1.96	1.96	2.72	0.70	0.32
24	1.20	1.70	2.34	2.34	3.22	0.76	0.32
48	1.99	2.50	3.75	3.75	4.63	1.01	0.63

* APPROXIMATE VALUES

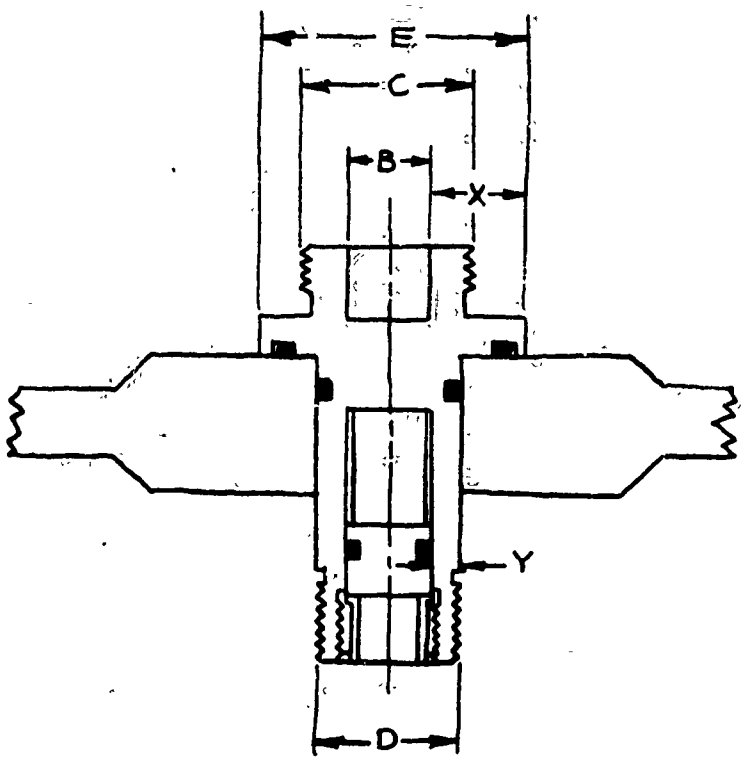

Figure 2-13. Penetrator Envelope Dimension Development

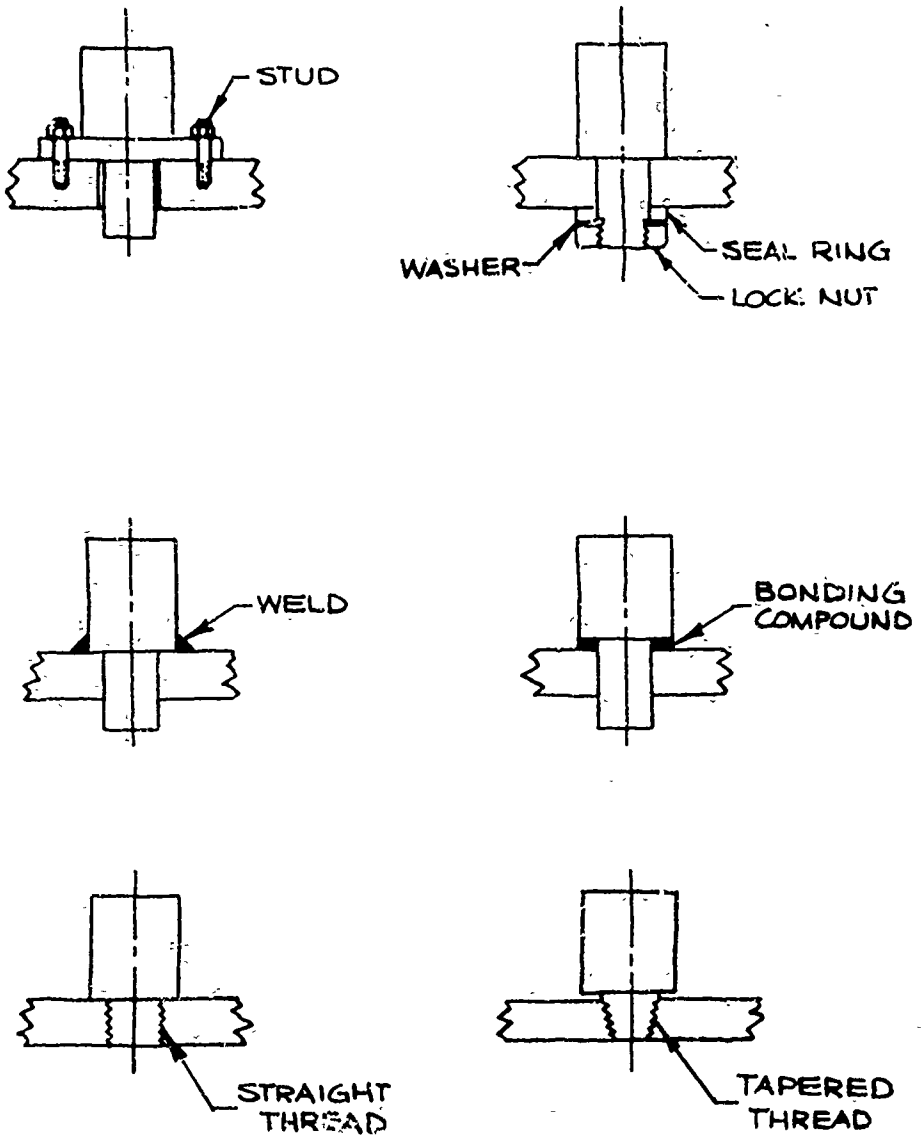

Figure 2-14. Penetrator to Hull Fastening Methods

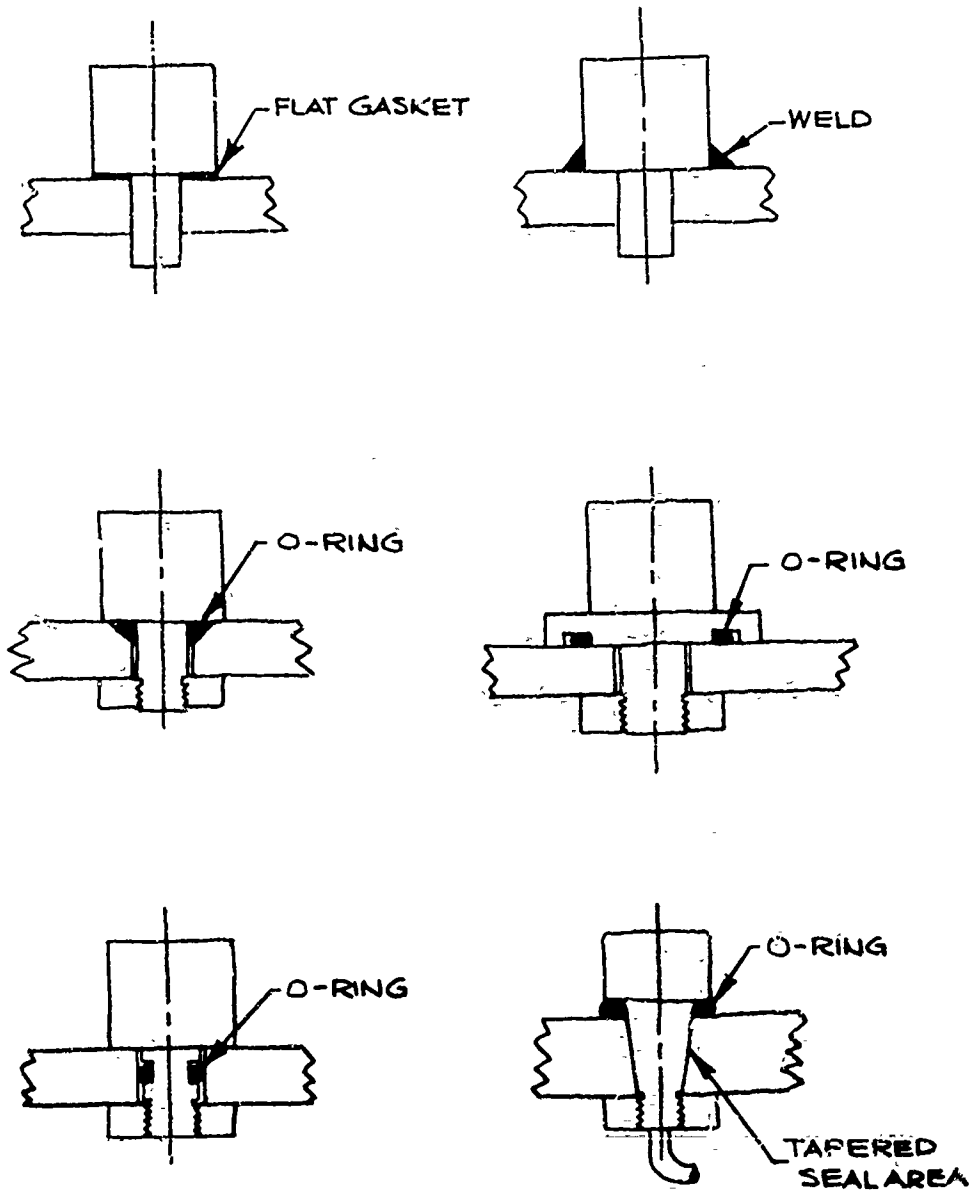

Figure 2-15. Penetrator to Hull Sealing Methods

it is not easy to detach or replace the penetrator when repairs or changes are necessary. For this reason it is not suggested for DSVs.

The automatic squeeze type gasket such as an O-ring has been successfully used for years as a primary and secondary seal gasket. This type of seal offers the designer both flexibility and replaceability. O-rings seals are simple in design, compact, efficient, and economical. O-ring seals become increasingly more effective as greater pressure is applied in metal-to-metal O-ring seal designs. O-ring extrusion is possible in radial seal applications but this is countered with the use of backup washers for high pressure applications. O-rings are easily replaced and readily available, thus facilitating maintenance. O-ring seal designs have been used by the Navy in similar applications with great success in past years. For these reasons, they are recommended in this application as penetrator primary and secondary seals.

Another seal type which has found use in past years and has proven acceptable is the metal-to-metal tapered seal. In this application, a tapered penetrator body is fitted into a tapered hole. Eighty percent metal-to-metal contact is desired to maintain the required seal. This type of seal has been used as a secondary seal in a number of penetrator applications. One of the primary reasons for the use of this type seal is that the penetrator body provides reinforcement to the hull sphere if the tapered interface is properly designed. The disadvantage of this type seal is the fine machining required to provide the proper metal-to-metal interface between the penetrator and hull which generally requires custom fitting of the penetrator to the tapered hole.

2.4.6 HULL INSERT TYPES -- A large number of hull insert types or hole configurations have been used in underwater vehicles. The basic types are depicted in figure 2-16. For instance, the shallow, low cost vehicles have made use of hull inserts with threaded holes. In this case the single connector penetrator is screwed into the insert and O-ring sealed on the face of the insert. A number of vehicles have made use of a tapered hole machined directly into a thickened section of the hull. Another vehicle penetrator hole is conical in shape. A plastic gasket is pressurized in the cone area by tightening the penetrator body with the inboard lock-nut. The other hull inserts shown have been used at various times on U.S. Navy vehicles. Most use full penetration welds at the insert hull interface. The penetrators are O-ring sealed to the hull inserts in all cases. As seen in figure 2-17, the insert merely replaces the metal removed in the hull for the penetrator to pass through. The hull insert material is the same as that used in the hull. A welded noble metal cladding is used in the O-ring seal area in all cases for corrosion resistance purposes unless the hull material is a noble metal.

Where possible, it is recommended that the penetrator be loose fitted and O-ring sealed in the pressure hull in a tapered hole. Should the external portion of the penetrator be sheared off, then the remainder of the shell would plug itself into the tapered hole. A tapered hole is favored over a stepped hole as shown in figure 2-16 due to the absence of the stress concentration present in a stepped hole.

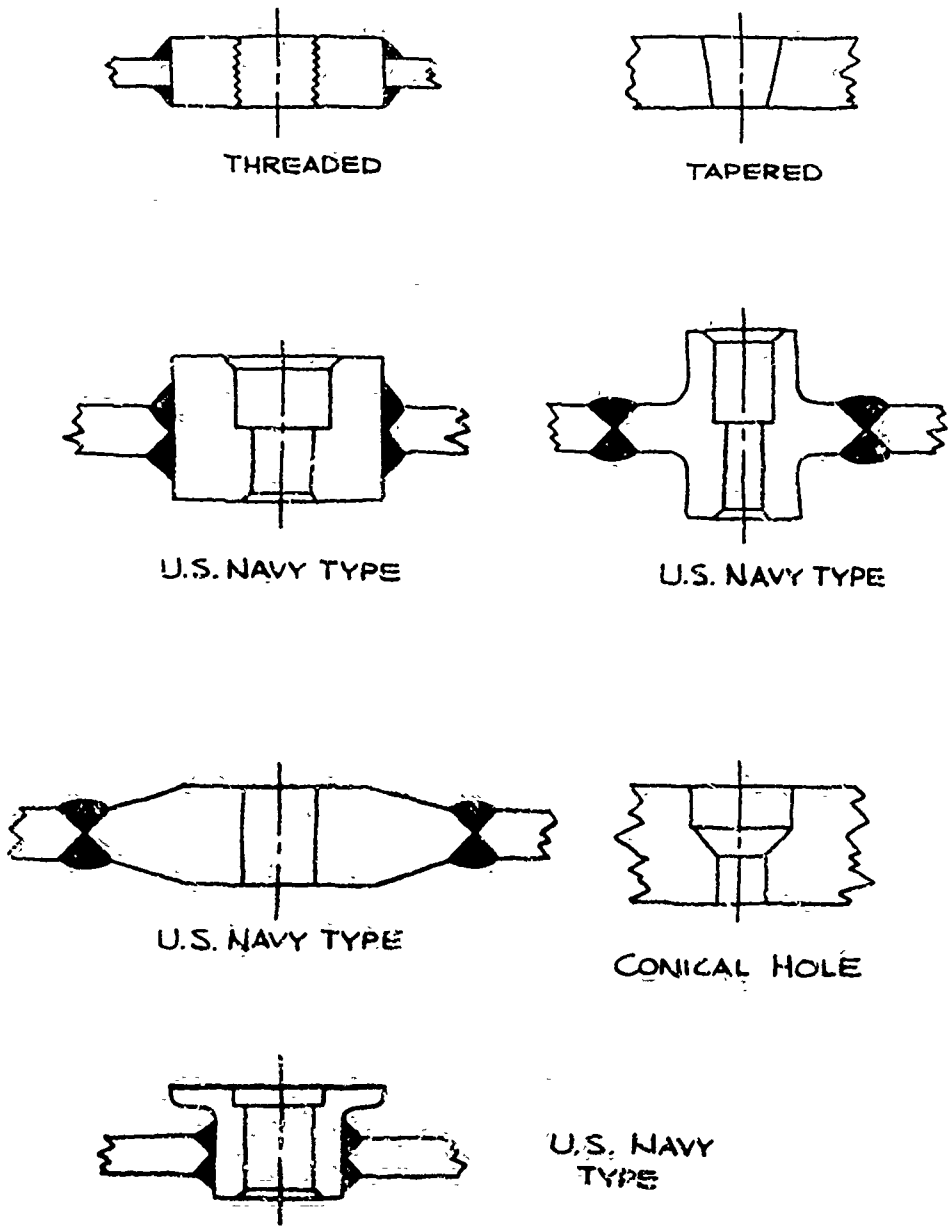

Figure 2-16. Typical Hull Inserts for Electrical Penetrators

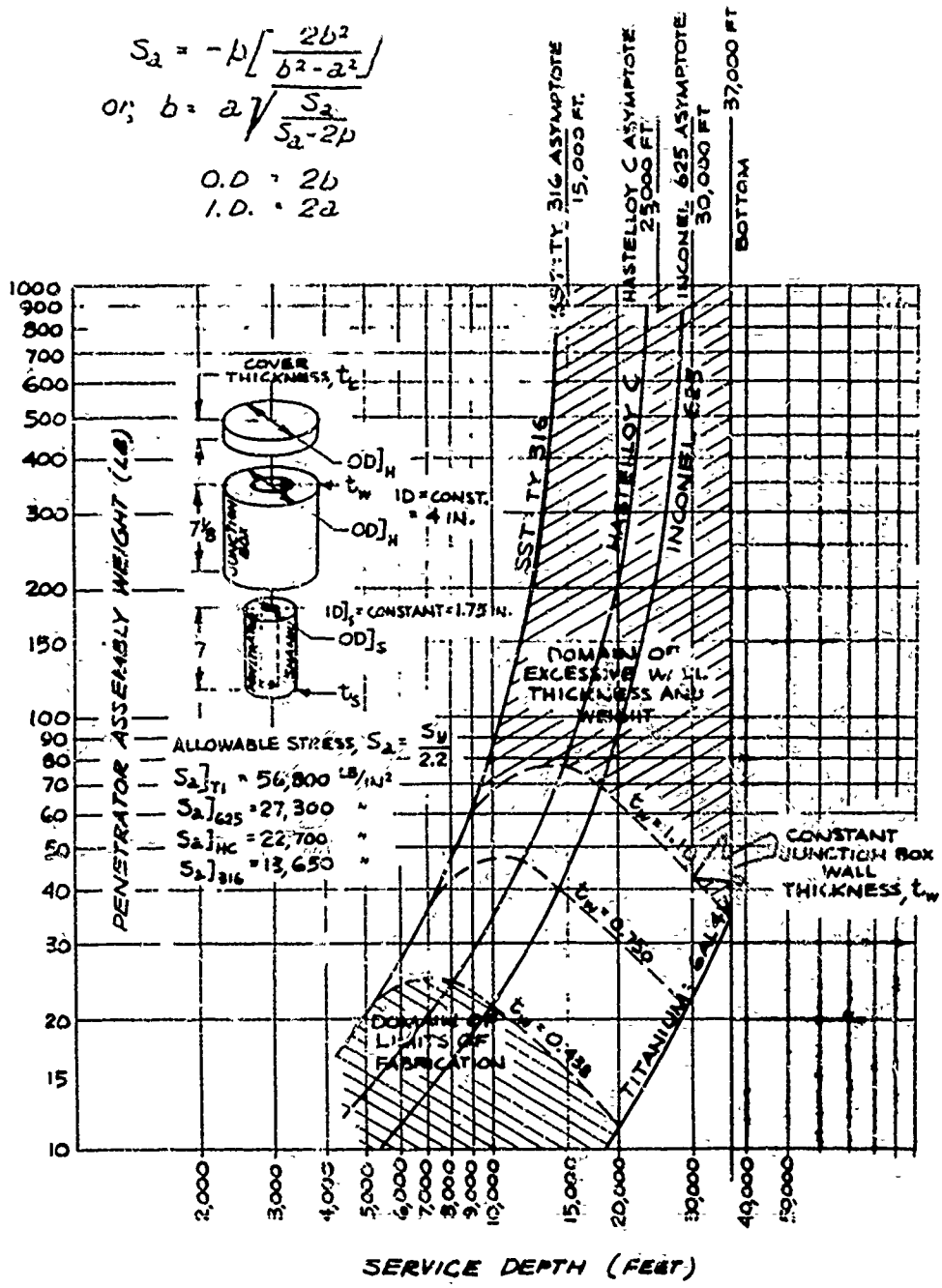

Figure 2-17. Depth-Weight-Material Analysis of Multiple Connector Type Hull Penetrator

A tapered hole in which the penetrator is interference fitted to the hole in the hull can be used. However, it has the disadvantage of being more difficult to machine as the tapered fit must have at least 80 percent contact to provide the desired bearing area. Also, complete interchangeability between penetrators and all holes in the hull is somewhat impaired due to type of select machining operations required to obtain the proper fit between all holes. This type of penetration can introduce hull weight savings; however, as the penetrator can be often times designed to withstand the hull hoop stresses present around the hole during vehicle deep submergence conditions. The penetrator shell is larger in diameter and is heavier to withstand the stresses imposed; however, the hull may not have to be thickened in the hole area to compensate for the hole placed in the hull. These factors must be considered during the design of the vehicle pressure sphere.

2.4.7 INSULATION AND CONDUCTOR SEAL -- As seen from the basic types of penetrators noted earlier, many types of seals are used to penetrate the hull of a submersible. These include:

a. Internally watertight cable with stuffing tube grommet or O-ring outer cable seals,
b. Single connector penetrators with contacts sealed and insulated with plastic materials such as epoxies,
c. Potted type penetrators with terminals sealed in plastic and cable sealed with molded elastomeric boots,
d. Multi-connector penetrators utilizing primary seal connectors with contacts sealed with compression glass or plastic (epoxy) compounds. The secondary wire seal in some cases has been sealed with a stuffing tube grommet or a glass or epoxy contact insert.

Not all penetrators have used primary and secondary conductor seals at the pressure hull of the submersible. This, however, is felt to be mandatory for safe vehicle design. Should the primary seal fail, then a secondary seal, preferably located on the inboard side of the penetrator, would provide the necessary water dam to protect the vehicle until it can reach the surface.

Internally watertight cables (per MIL-C-915) have been used to penetrate shallow submersible hulls. The cables have been sealed with primary and secondary stuffing tube grommet seals (figure 2-1). This type of seal is not recommended. The assembly cannot be tested once installed, therefore the seal is dependent upon the workmanship of the cable manufacturer and the installing mechanic's skills and attention to detail to properly seal the cable internals. This is felt to be too great a risk to take for a critical seal condition of this type. This type of seal also does not allow a desired cable disconnect point at the pressure hull.

Another type of seal used is the potted and molded design as depicted in figure 2-2. Here the primary seal is a shouldered terminal press fitted into a steel header insert. The secondary seal is provided by epoxy potting terminal junctions in the penetrator shell. This type of fitting has proven acceptable. The primary seal can be hydrostatically pressure tested prior to molding the cables to the penetrator, however, the secondary potted seals cannot be tested. Another disadvantage to this type of penetrator is the lack of a cable disconnect point at the pressure hull.

Single connector penetrators which are screwed in, bolted or secured by a lock nut into a hull insert are not acceptable in themselves as a DSV conductor seal as they do not provide a secondary wire seal. Should the connector be sheared from the hull, water would course through the open hole in the hull. A secondary cable or conductor seal is mandatory for safety considerations. A number of designs have used a connector primary seal and a wire secondary grommet seal. This design has been considered acceptable. However, it must be realized that the wire secondary grommet seal has hydrostatic pressure limitations. Also, the secondary seal is not readily testable prior to installation.

The optimum design single connector penetrator is one in which the conductor seals are located in the penetrator shell immediately inboard and outboard of the shell. The conductor seals should also have the capability of being pressure tested prior to installation on the vehicle. The secondary seal should also remain intact and functioning should the primary seal be accidentally destroyed. These features can best be obtained by locating a connector inboard and outboard of the penetrator shell as shown in figure 2-3.

The multi-connector penetrator is essentially the same as a single connector design, but with many connectors located on the outboard side of the penetrator shell. In this case, each connector provides a wire primary seal. The wire secondary seal is usually provided by a large connector located on the inboard side of the fitting as shown in figure 2-4.

In summary, a single connector penetrator is recommended where the outboard electrical system dictates that the junction box be located at a remote point on the vehicle. In other cases, it is recommended that the junction point be located directly at the penetrator. Most designs in use on United States Navy submersibles use multi-connector penetrators. Designs of this type ensure that if one external cable is damaged, the entire system performance is not jeopardized.

2.4.8 FLEXIBILITY - DESIGN -- Flexibility, as it pertains to a penetrator, is the ability to be changed or modified to accommodate various systems or mission requirements. This can be readily achieved by a modularized or building block design. A penetrator shell is used which is sized to house power, control, signal and radio frequency circuits. The primary and secondary contact seals (header inserts) can be changed to accommodate these four types of circuits as follows:

a. Forty-eight No. 16 size contacts - control
b. Eighty-five No. 20 size contacts - signal
c. One coaxial contact - radio frequency, additional contacts for control circuits can be included.
d. Three No. 1/0 contacts - power

Secondly, the penetrator is designed to allow the outboard cable junction box to be mounted directly to the penetrator shell or at a location remote from the penetrator. In this case, a single connector plug is connected to the penetrator and the cable runs to the junction box which is located close to the components being serviced.

The recommendation of a single penetrator shell size permits the use of one size hole to be machined into the pressure sphere of the vehicle. This allows switching of penetrator at any time

during the life of the DSV without replacement of the hull insert. The design as recommended in this Handbook offers the system engineer maximum flexibility in the design and use of circuitry for the DSV.

2.4.9 MATERIAL SELECTION -- The selection of material in component design is always one of the most critical factors in the design process. For instance, material choice affects corrosion resistance of the penetrator in the sea water environment, the strength and consequent size and weight of the penetrator, the fabricability (machinability) of the penetrator, the overall cost, the ability to withstand casualties, and the ability of the material to withstand the thermal shock of the oceanic environment. Materials suitable for the marine environment are covered in section 5. However, the discussion here centers on the reasons for recommending titanium alloy for penetrators at 0 to 2[illegible],000-foot operating depths. Major factors influencing the selection of titanium are its excellent strength to weight ratio, corrosion resistance in sea water, and the material's availability in various shapes and sizes. Titanium is slightly more difficult to machine than stainless steel, and the cost per pound of barstock is at least triple that of stainless steel at this time. The weight of titanium, however, is only approximately half that of stainless steel.

Penetrator weight is an important consideration on DSVs as it affects the payload of the vehicle. Figure 2-17 is designed to graphically relate the variables controlling hull penetrator weight. The analysis is somewhat simplified to avoid the confusion of too much detail. The basic penetrator form is depicted as a flat cover plate and two hollow cylinders of different diameters.

Preliminary layouts using arbitrary combinations of receptacles dictated that the larger cylinder have a 4-inch inner diameter. Wiring space requirements and hull configuration led to establishing the inner diameter of the small cylinder at 1 3/4-inches and its length at 7 inches; the large outer cylinder was found to require a 7 1/8-inch length to accommodate the desired number of receptacles. The cover's dimensions are not arbitrary and must be found from stress equations as must all other geometric measurements. These are:

a. Outside diameter of the large cylinder of the penetrator
b. Outside diameter of the small cylinder of the penetrator (see page 2-28)

These, in turn, are a function of material strength and mission hydrostatic pressure and are related through elastic stress equations. Once these variables are evaluated the penetrator weight can be established. The curves bearing material designations "SST ty 316," "Hastelloy C," etc, are plotted by assuming various depth requirements and calculating corresponding weights of the penetrator. Different materials have different densities and allowable stress levels, the latter determining the wall thickness of each cylinder and the cover plate thickness and diameter. These dimensions coupled with the material density allow the calculation of penetrator weight. Thus, for any material a penetrator weight can be calculated that corresponds to a specific depth. The series of points established for any one material in this manner are then joined with a smooth curve. This process results in establishing the weight - depth relationship for the geometric form shown. The

above procedure is repeated for all the materials considered and results in the graph shown as figure 2-17.

Shown in the figure are two shaded areas. The upper region represents penetrators of outer cylinder wall thickness exceeding one-inch which was arbitrarily chosen as the maximum wall thickness based on resulting penetrator weight. The lower shaded area corresponds to the minimum allowable wall thickness which is dictated by geometric considerations. This represents the least possible wall thickness consistent with O-ring groove and sealing areas required for the receptacles penetrating the cylinder wall and the cover attached to the top of the cylinder. (No consideration of buckling failure was investigated in the lower region).

Included in the graph are the dashed lines intersecting the material curves. These are lines of constant wall thickness (larger cylinder) and are provided as a convenience in comparing depth capability and corresponding weight of penetrators of equal wall thickness but fabricated from different alloys.

The configuration of recommended designs does not preclude the use of high yield strength steels, nickel alloyed steel such as 316L, Inconel 625 or Hastelloy C for the low and medium penetrator operating levels. However, their use as a substitute for titanium is difficult to justify when a comparison is made in the categories of weight and strength. Hydrostatic pressure experienced at the upper end of the operating range precludes their use in the recommended design. Therefore, the use of titanium, composition 6, 6AL-4V per MIL-T-9047 is recommended throughout. The oxygen content in this material should not exceed 1600 parts per million.

2.4.10 SAFETY -- Overall safety considerations of the personnel in the DSV is one of the major objectives of the Handbook. The Failure Modes and Effects Analysis (FMEA) discussion in section 6 aptly describes the possible penetrator failure modes and the resulting effects on the mission. This type of component and system analysis must be conducted by the engineer to assure a successful design. The analysis also assists the design reviewer in evaluating the engineer's design and possibly suggests areas where tests must be conducted to verify the design goals. The penetrator design parameters noted earlier in this section are all directed to ensuring a sound penetrator design which provides proper system operations as well as required safety features.

2.5 JUNCTION BOX DESIGN PARAMETERS

Design aspects that directly or indirectly affect operational reliability of junction boxes are quite similar to and in many respects the same as those affecting reliability of any electrical components subjected to the deep ocean environment. Some of the more critical areas of design that must be appraised are listed below.

a. Seal design and seal redundancy which is essential to maintain a high degree of electrical integrity.

b. Material used for contact insulating and sealing at all disconnect points must provide a positive water barrier and be readily cleaned in case of accidental contamination from salt water.

c. Compatibility of all materials when continually submerged in salt water.

d. Resistance of bonding and adhesive systems to long term degradation.

e. Provision for adequate protection and securing of all cables directly at the exit point from junction box.

f. Adequate space in which to accomplish internal wiring with consistent results.

g. Adequate support of internal wiring and the security of all electrical connections. Most of these design aspects are discussed in detail in other sections of this Handbook.

h. The effects of electrical failure of the component on interconnected components.

An outboard junction box can be thought of as an electrical conductor distribution point adequately protected from the submerged ocean environment.

Junction boxes can be integral with, or attached directly to the electrical hull penetrator. However, location of equipment being serviced often dictates the use of a junction point that is remote from the hull penetration. In this case, the junction box can be quite similar in configuration to the penetrator attached type or can vary somewhat as it is not directly associated with hull integrity and human safety in the event of failure.

Several types of junction boxes are in current use. The simplest type of junction is the molded type where a relatively large cable containing many conductors breaks out into several smaller cables having a reduced number of conductors. (see figure 2-18). The splice point is encapsulated by molding or potting. The initial cost of this type is low but has the obvious disadvantage of not having disconnect points. In the event of damage, it is very likely that the entire harness would have to be replaced. In addition, the harness often reaches an overall length that becomes ungainly to fabricate, properly protect, and install.

A commonly used type of junction box is basically a cylindrical projection of the penetrator which is integral with or attached to the penetrator shell. (see figures 2-4 and 2-10). This cylinder must provide a pressure proof enclosure for the interconnecting wiring between the hull penetrator and the individual connectorized points. The dimensions of the cylinder are determined by the following factors. The bore diameter must be large enough for adequate access for wiring and provide for the minimum bending radius of the particular conductor size being used. The bore diameter should be held to a minimum because this dimension plus required wall thickness, as dictated by pressure, fixes the minimum allowable outside diameter and weight. The outside diameter derived in this way is normally sufficient to provide the required surface area for receptacle mounting. Receptacles can be mounted in one or more tiers as required, however, more than two or three tiers results in an excessive projection from the hull which makes the penetrator more vulnerable to damage with the increase in bending moment. This must be avoided. The junction box access cover is O-ring sealed and secured with cap screws or welded in place as required. The receptacles are fastened to the cylinder by internal retainer nuts, cap screws in a bolt flange, or welded.

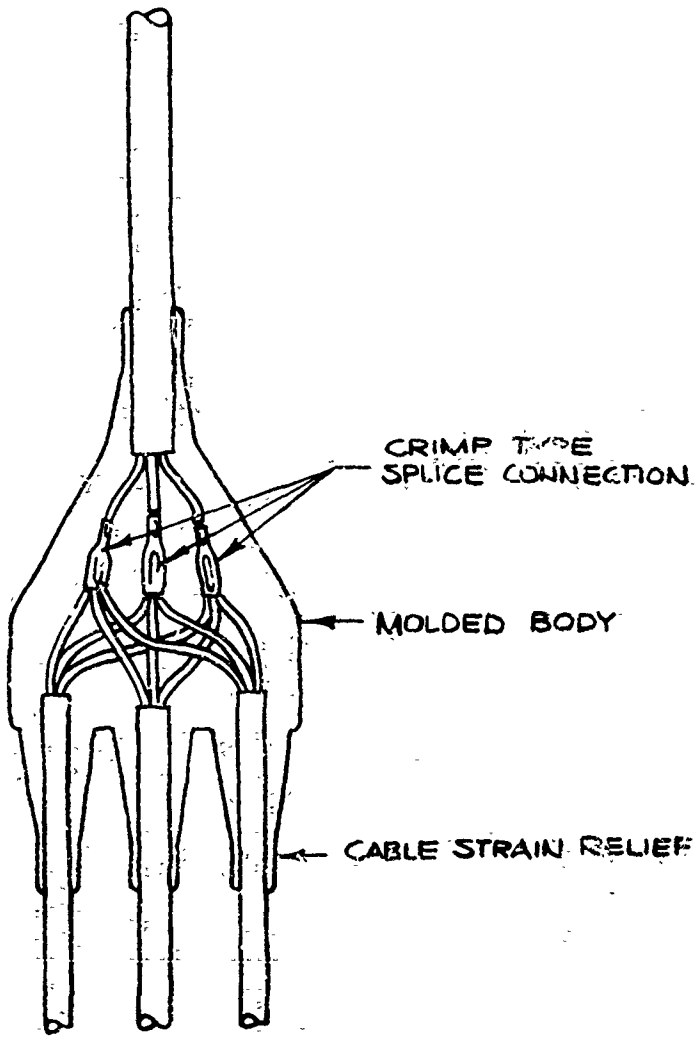

Figure 2-18. Elastomeric Molded Type Junction Box

Where the weld method is used and the cylinder material differs from that of the receptacle, a bimetallic weld should be avoided and a buttering weld used in the mounting area of the receptacle. Buttering is recommended in O-ring seal areas if the parent metal is not sufficiently corrosion resistant.

The detachable cylinder type of junction box has the advantage of removal for repair or modification without disturbing the penetrator or its seals.

The penetrator junction box should provide a cable protection and securing device which is mounted directly to the cylindrical junction box.

This provides for the support and orderly exit of the distribution cable assemblies at a point close by the connector where it is most effective.

When the cylindrical junction box is remotely located, it is normally mounted in the plane of its longitudinal axis with the large cable connector at one end.

A slight variation of the cylindrical box can be made for application where number and size of connectors are limited. This is accomplished by extending the shell of a relatively large outboard penetrator plug sufficiently to provide room for one tier of receptacles. This approach combines outboard plug and junction box into one piece of hardware which is coupled to the penetrator by a standard plug coupling ring.

The choice of straight or right angle plugs for junction box connectors depends to some extent on proximity of adjacent equipment. However, it is good practice to use right angle plugs where the cable would normally exit from the junction box in this orientation. Furthermore, the connector tier space envelope is minimized with the use of right angle plugs.

Interconnecting wiring in the junction box cavity should be as flexible as possible to allow for relatively small bend radii without stressing the electrical connection. The conductors should have a thin, abrasion resistant high temperature insulation such as a fluorocarbon/polyimide per MIL-W-81381. Insulation thickness is in the 5 mil range. Thick insulations unnecessarily limit the number of conductors that can be passed through the throat of certain configurations and in other situations hamper the assembly for lack of space. The proper choice of conductor is essential to a reliable wiring arrangement in a necessarily restricted space. Conductors can be terminated at junction points by soldering or by crimped contacts. Space restrictions favor the use of crimped contacts. These can be pins or sockets as required. All internal wiring and terminations should be potted in place to preclude relative movement of contacts and wires. Under certain conditions, a potted internal plug assembly (figure 2-9) is adequate to secure the contacts in place, with wire bundles individually and collectively tied. It is advisable to maintain a dry cavity atmosphere at assembly if the cavity is not completely filled with potting material. This prevents moisture condensation and any resulting insulation resistance deterioration. Where the complete cavity containing the internal wiring is potted, it is preferable to design in such a way that the entire potted assembly is removable for modification, repair or replacement, as shown in figure 2-6.

At operating depths in excess of 20,000 feet, the advantages of a pressure compensated junction box become very apparent. The 20,000-foot level is based on the use of titanium which has a very high strength-to-weight ratio. Other candidate materials would be sufficiently heavy in the required sections to dictate the use of a pressure compensated design at pressure levels well below the 20,000-foot operating depth.

The principal determining factors, whether or not to use a pressure compensated design, are weight and the physical limitations of the material being used. Other considerations that should be made a part of trade-off studies where either type would satisfy the specific operating requirements would include reliability, maintainability, and cost. These considerations would in turn be directly affected by location, available space, vulnerability to damage from impact, and others of a similar nature.

Many of the configuration restraints placed on a pressure resisting type of junction box can be ignored in the pressure equalized approach. Therefore, in addition to a cylindrical configuration, there are many options including a low profile pancake style with cable assemblies radially located.

This form utilized less space, allows accessibility of internal wiring for repair or modification, and can be provided with a flexible see-through window as a diaphragm. Additional pressure compensation is provided by a small bellows. This configuration can be connected directly to the penetrator or used at a remote location. In either case, the use of pressure proof connectors is recommended to provide a positive barrier to the entry of water from the connecting cable into the compensating fluid area. This requirement would apply equally to the use of oil filled cable or conventional underwater cable types.

The choice of material for the box is less restrictive because only relatively light sections are required where there is no pressure differential. Material selection should be based on compatibility with the material of attaching connectors and all around resistance to the salt water environment.

Several oils having good dielectric characteristics have been used as a compensating fluid. Basically, these are either a silicone base oil or a pharmaceutical grade of mineral oil. The principal considerations in making a choice would be compatibility of the oil with all other materials used in the junction box and its long-term chemical stability. The specific gravity of the oil would be a consideration only where weight is extremely critical or any in-leakage of salt water must be segregated either above or below the oil level. Also, the compressibility factor of the dielectric oil is important as it affects the compensation system design. One of the possible disadvantages of an oil filled system is that a compensation system may have to be provided. This adds space and weight to the overall system. See reference 5 for recommended oil selection data.

A connectorized, molded elastomer type of junction box has seen limited USN application recently. Experience to date indicates that it is a reliable, relatively inexpensive design approach. All

internal wiring and terminations are subjected to a fluid like pressure pattern, making special additional supporting techniques unnecessary. The reliability of long term service depends on the stability of the elastomer and the metal-to-elastomer bond. This design approach consists of molding titanium receptacle mounting adapters and necessary interconnecting internal wiring with crimped socket contacts at each end into the desired junction box form. The mounting adapters provide tapped holes and O-ring sealing surfaces for attaching the necessary receptacles. A polygon design is recommended. This is shown in figure 2-19. This offers a minimum space envelope consistent with good internal wiring practice, cable distribution and mounting methods. Some of the advantages include the following: The design and fabrication restraints associated with a pressure vessel are nonexistent. The principal material is not subject to corrosion. Component parts are readily reclaimed if repair or modification become necessary. Additional experience in the long duration application of this concept at higher pressure levels is necessary before it can be recommended over the more conventional type of junction box. This type would normally be recommended for installation remote from the hull penetrator.

2.6 SUMMARY

This section has reviewed the various basic types of penetrators available. Design parameters for a proper penetrator design have been listed. Recommendations have been made for designs to suit the various operating depth classes noted. Finally, the design factors which must be considered in any penetrator design have been discussed in detail. Quality control considerations as well as penetrator design calculations, Failure Modes and Effects Analysis, test requirements and certification requirements are noted in section 6.

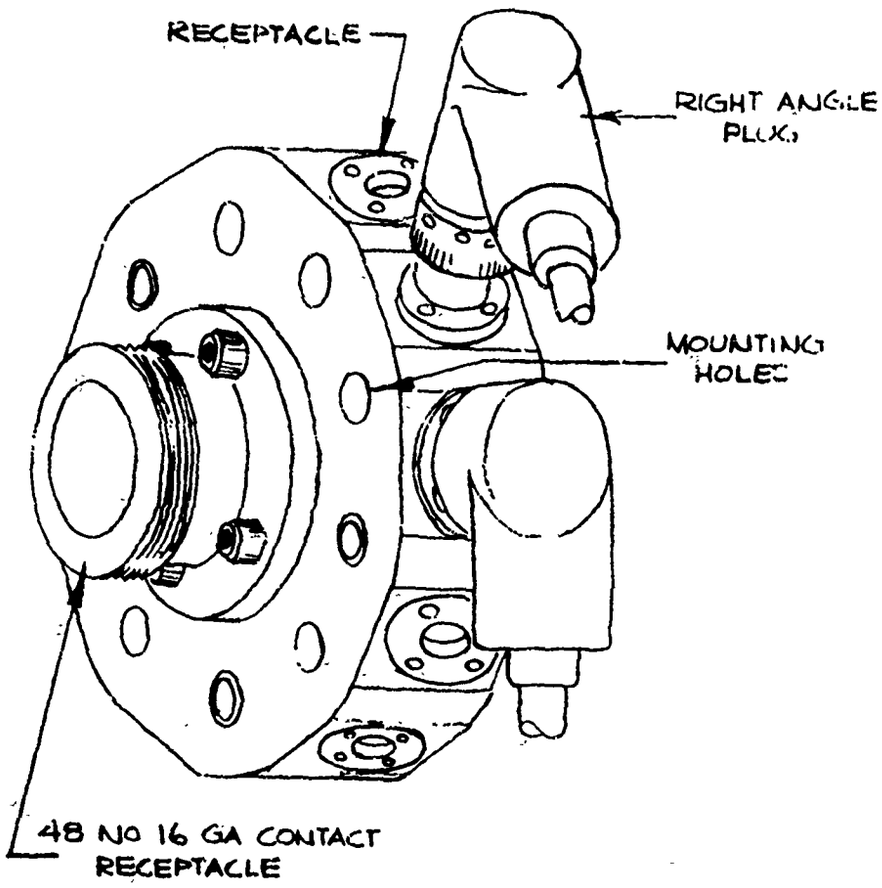

Figure 2-19. Polywheel Junction Box Design

Section 2

REFERENCES

1. Morrison, J. B. An Investigation of Cable Seals, Applied Physics Laboratory, University of Washington, March 1, 1954.

2. Nelson, A. L. "Deep Sea Electrical Connectors and Feedthrough Insulators for Packaging Electronics," Material Electronic Packaging and Production Conference at Long Beach, California, June 9, 1965.

3. Haworth, R. F. and J. E. Regan. "Watertight Electrical Cable Penetrations for Submersibles - Past and Present," ASME Paper No. 65-WA/UNT-12, ASME Conference of 7-11 November 1965.

4. Haworth, R. F. "Electrical Cabling System for the Star III Vehicle" ASME Paper No. 66-WA/UNT-11, ASME Conference of November 27 - December 1, 1966.

5. DOT Electrical Insulation Material Handbook, U.S. Naval Research and Development Laboratory, Annapolis, Md., Report No. 6-166.

PRECEDING PAGE BLANK - NOT FILMED

Section 3

TABLE OF CONTENTS

Section	Title	Page
3.1	Connector Designs	3-1
3.2	Electrical Connector Types	3-8
3.2.1	Metal Shell Connectors	3-8
3.2.2	Molded Plastic Connector	3-8
3.2.3	Molded Elastomer Connector	3-9
3.2.4	Underwater Disconnectable Connectors	3-13
3.3	Connector Design Recommendations	3-14
3.3.1	Connector Classes	3-14
3.3.2	Connector Design - 0-20,000 Feet and 0-37,000 Feet	3-14
3.3.3	Coaxial Connector Design	3-14
3.4	Connector Design Parameters	3-18
3.4.1	Connector Configuration	3-21
3.4.2	Connector Types and Sizes	3-21
3.4.3	Electrical Requirements	3-22
3.4.4	Plug Design	3-23
3.4.5	Receptacle Design	3-23
3.4.6	Material Selection	3-26
3.4.7	Pin and Socket Contact Design	3-28
3.4.8	Connection - Conductor to Socket Contact	3-28
3.4.9	Fastening - Plug to Receptacle	3-35
3.4.10	Sealing - Plug to Receptacle	3-35
3.4.11	Insulation and Seal - Pin Contact	3-36
3.4.12	Insulation and Seal - Socket Contact	3-38
3.4.13	Seal - Cable to Plug	3-41
3.4.14	Cable Strain Relief	3-47
3.4.15	Plug adapter for Cable Protection	3-47
3.4.16	Connector Accessories	3-47
3.5	Summary	3-52

PRECEDING PAGE BLANK - NOT FILMED

Section 3

LIST OF FIGURES AND TABLES

Figure	Title	Page
3-1	Cable Stuffing Tube Component Penetrator	3-2
3-2	Pressure Proof Electrical Connector	3-3
3-3	Neoprene Molded Cable Penetrator	3-4
3-4	Molded Cable Penetrator with Insulated Backing Header Insert	3-5
3-5	Flange Mounted Polyethylene Molded Plug Penetrator	3-6
3-6	Metal Shell Connector	3-10
3-7	Molded Plastic Connector	3-11
3-8	Molded Elastomeric Connector	3-12
3-9	Recommended 0-20,000/37,000 Foot Depth Connector	3-15
3-10	Recommended 0-20,000/37,000 Foot Depth Receptacle with Removable Header Insert	3-16
3-11	Recommended Coaxial Connector Design	3-17
3-12	Typical Conductor Damage Due to Cycling Hydrostatic Pressure	3-24
3-13	Receptacle-To-Component Fastening Methods	3-25
3-14	Scoop-Proof Connector Requirement	3-27
3-15	Recommended O-Ring Dovetail Groove Dimensions	3-37
3-16	Cable-To-Plug Seals	3-45
3-17	Methods Used For Cable Strain Relief	3-48
3-18	Components of the Cable-To-Plug Strain Relief and Seal	3-49
3-19	Cable Protection or EMI Shielding Device	3-50
3-20	Pressure Proof Connector Covers	3-51

Table	Title	Page
3-1	Electrical Connector Design Factors	3-19
3-2	Recommended Connector Shell Sizes	3-21
3-3	Conductor Current Carrying Capacity as Compared to Copper	3-22
3-4	Approximate Specific Gravities of Materials	3-29
3-5	Electrical Resistivity of Metals	3-32
3-6	Specific Stiffness of Metals	3-33
3-7	Pin Contact Design Information	3-34
3-8	Plastic Properties	3-43

Section 3

ELECTRICAL CONNECTOR DESIGN

3.1 CONNECTOR DESIGNS

Designs for passing electrical conductors through the enclosure walls of pressure proof underwater electrical components have been given many names over the years. The descriptions include:

a. Penetrator
b. Cable gland
c. Underwater connector
d. Pressure proof connector
e. Cable seal
f. Cable feed through
g. Electrical splice
h. Submersible connector

For initial discussion, it can be considered that the device in question must seal a cable as it passes through a pressure proof component enclosure. This being the case, the following basic designs can be considered to seal the cable and provide the desired electrical continuity between components:

a. Cable stuffing tube component penetrator (reference 1).
b. Pressure proof electrical connector (reference 2).
c. Molded cable penetrator (reference 3).
d. Molded cable penetrator with insulated bushing header insert (reference 4).
e. Flange mounted polyethylene molded plug penetrator (reference 5)

All of these devices are similar in design to those noted for electrical hull penetrators in the previous section as they provide the same function; that of sealing conductors as they pass through a pressure proof enclosure. Cable penetrators for underwater electrical/electronic components have been one of the most failure prone components on DSVs While failure of a cable component penetrator may not be as critical as a hull penetrator failure, many missions of DSVs have been aborted due to the failure of outboard penetrators and harnesses on submersibles.

As seen in figures 3-1 through 3-5, many basic devices can be used to penetrate cables through component enclosures. The cable stuffing tube type penetrator is generally an inexpensive device but is limited to hydrostatic pressures below 1,000 psi and requires well designed, close toleranced cables and stuffing tubes to be effective. The molded cable penetrators (figures 3-3 and 3-4) can also provide an inexpensive sealing device, especially in quantities. The major

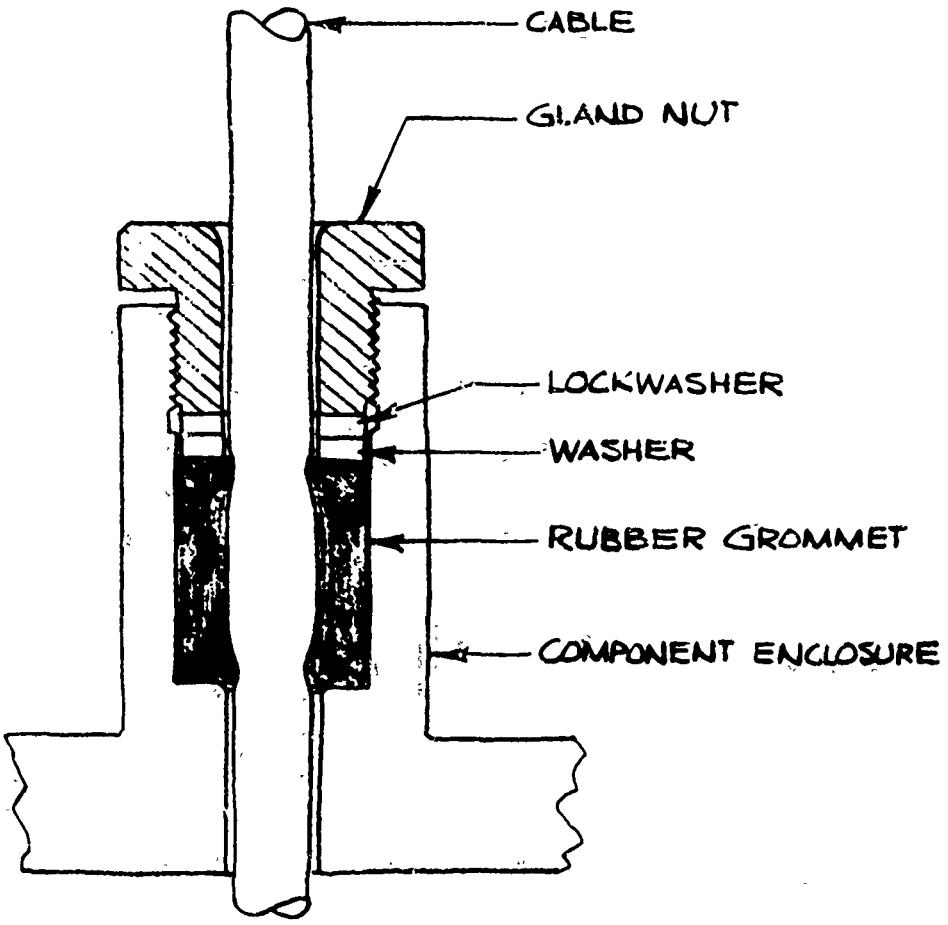

Figure 3-1. Cable Stuffing Tube Component Penetrator

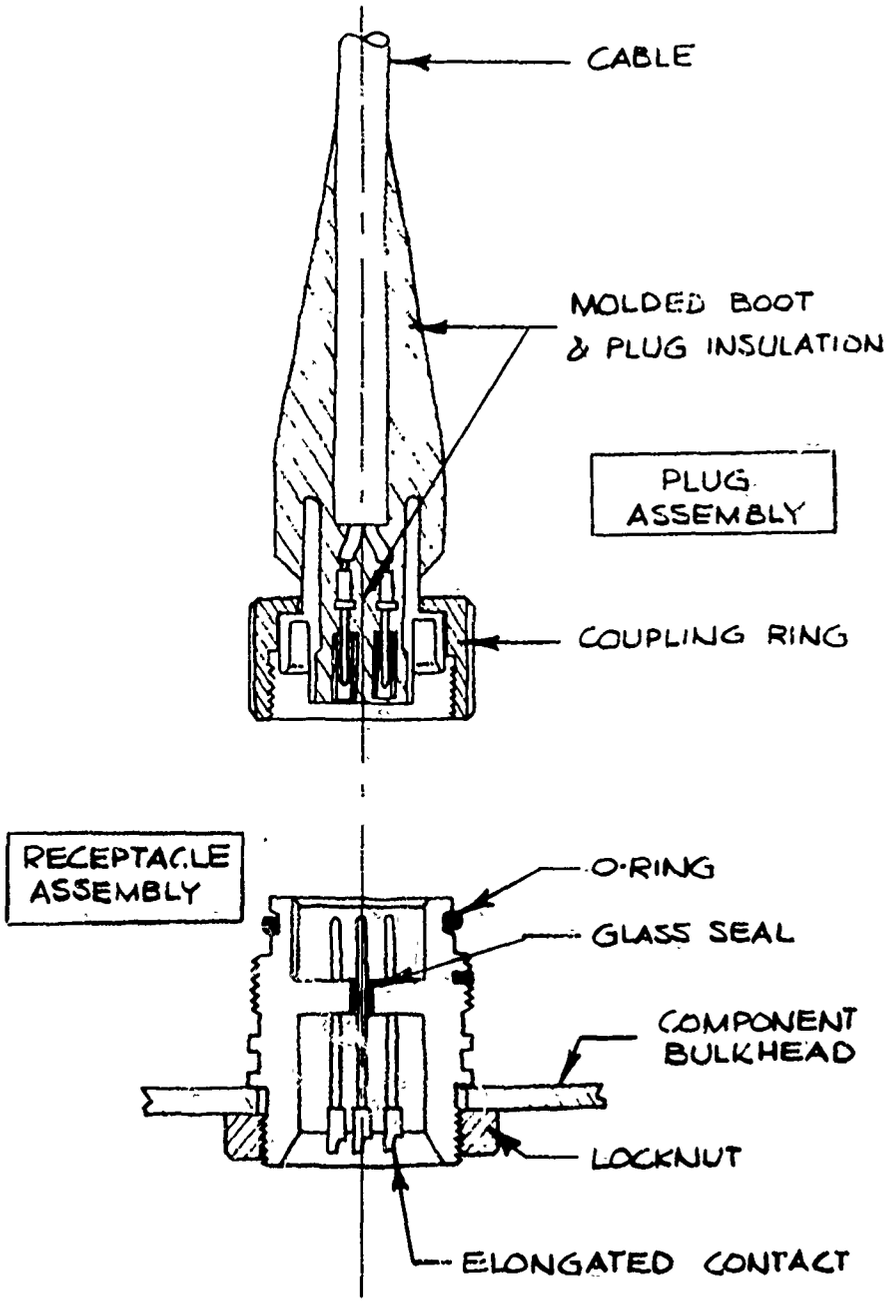

Figure 3-2. Pressure Proof Electrical Connector

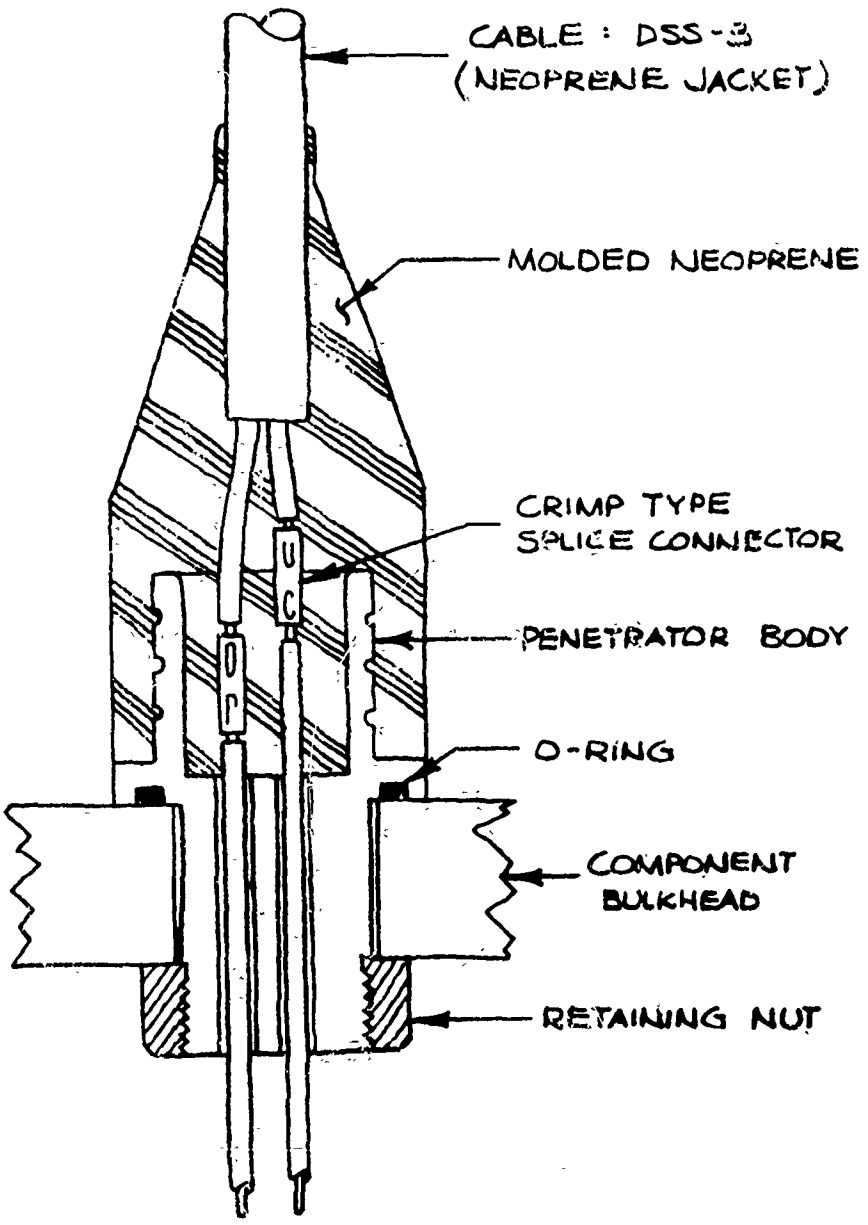

Figure 3-3. Neoprene Molded Cable Penetrator

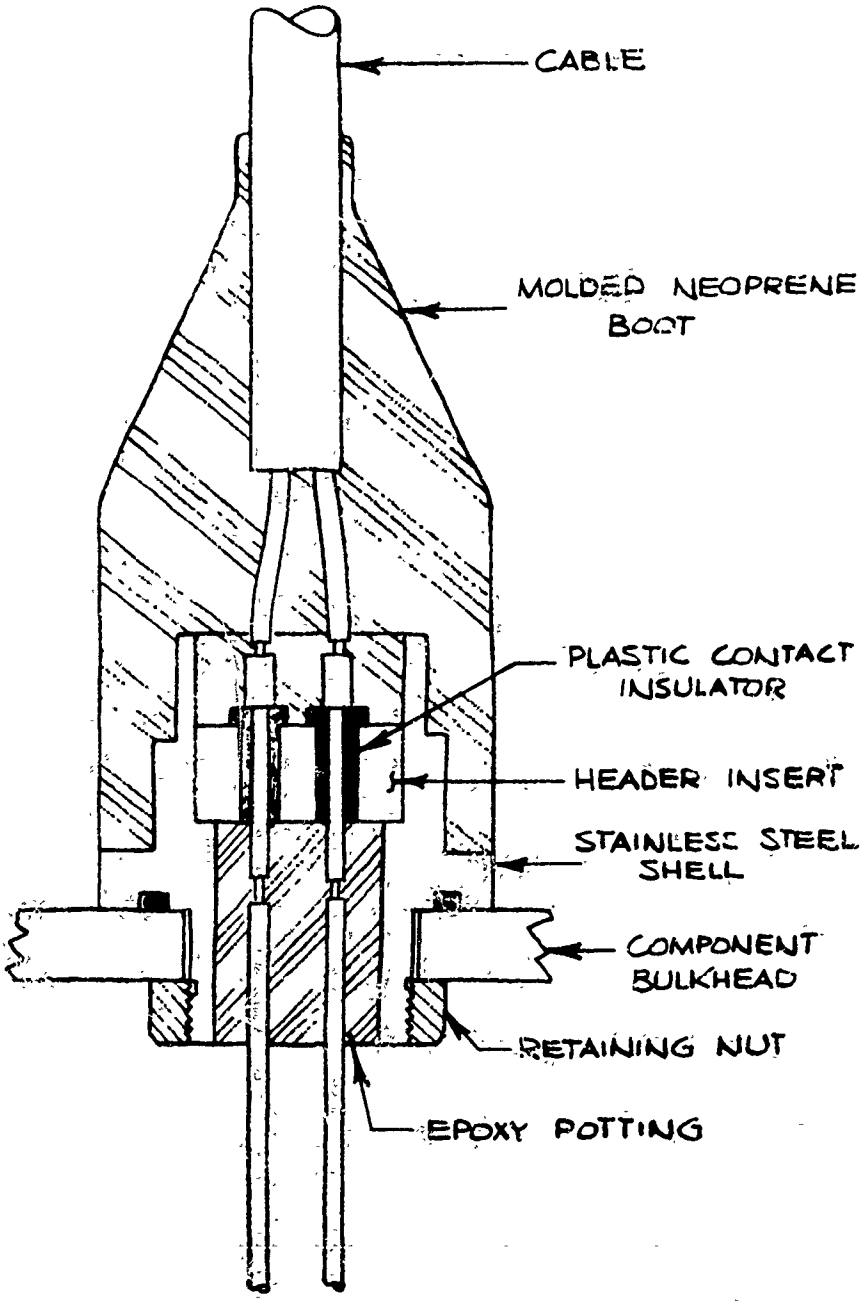

Figure 3-4. Molded Cable Penetrator with Insulated Backing Header Insert

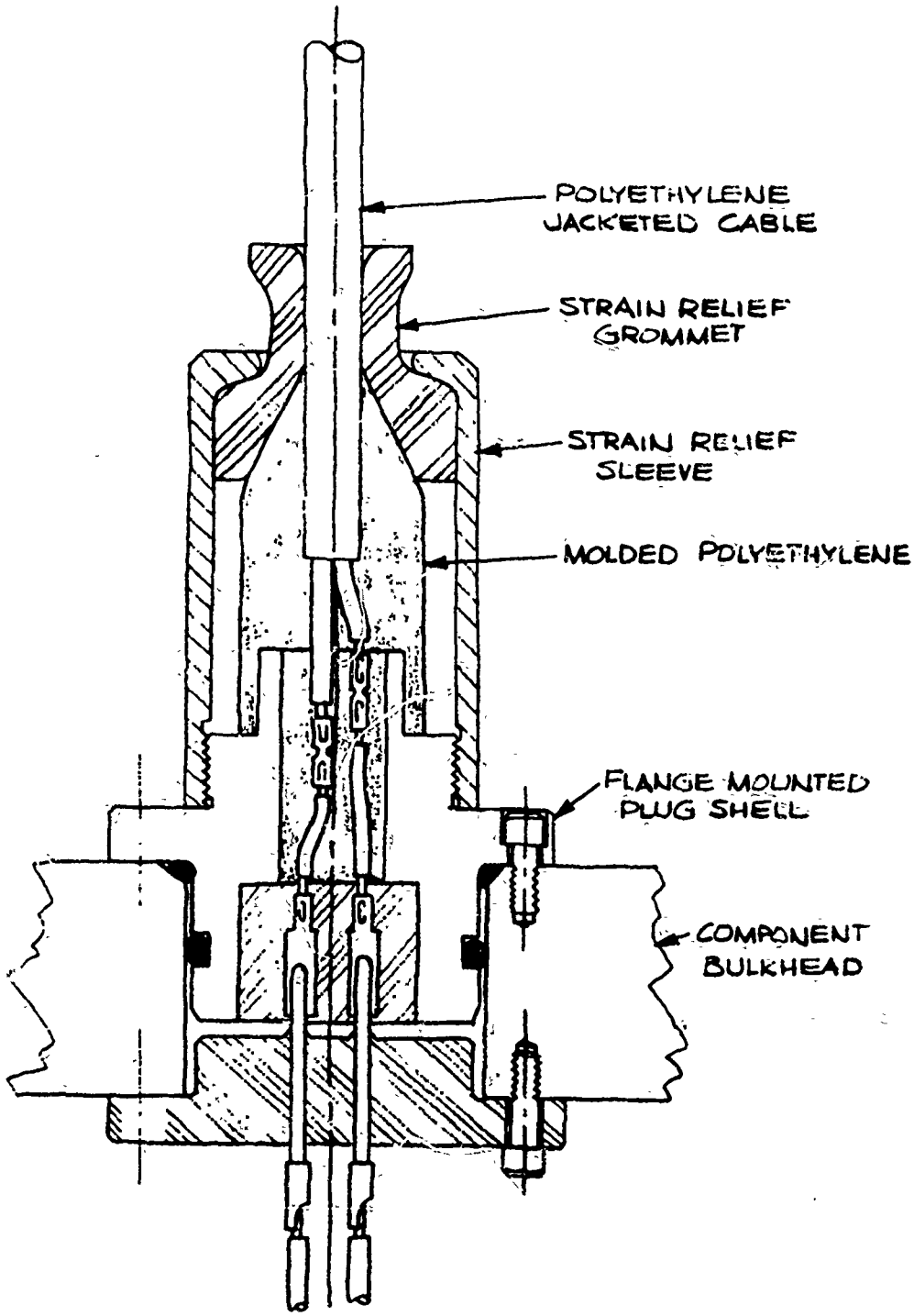

Figure 3-5. Flange Mounted Polyethylene Molded Plug Penetrator

disadvantage of this type penetrator is that the penetrator must be scrapped if the cable is damaged in service, and that the assembly does not provide a disconnect point at the component enclosure. Figure 3-5 shows a polyethylene molded plug penetrator that is flange mounted to the component enclosure. The assembly could also be polyurethane or neoprene molded. This design is basically an electrical connector with the receptacle mounted inside the enclosure. The receptacle in this case is not a pressure proof device. Should a seal failure occur in the plug assembly, then the component internals become flooded and the unit is damaged beyond repair. This design does offer the inherent advantages of connectors which provide an interface disconnection point at the component.

The use of pressure proof electrical connectors at pressure proof and pressure compensated electrical/electronic components (see figure 3-2) is recommended. The principal reason for this is that the connector type penetrator cable seal provides a needed harness disconnect point at the component. A secondary reason is that the pressure proof receptacle mounted to the component enclosure ensures the watertight integrity of the expensive electronic equipment should a failure occur in the harness assembly. Other reasons for using electrical connectors are as follows:

a. Provide an interface between the electrical/electronic component manufacturer and the vehicle manufacturer and user.
b. Provide a convenient electrical test point for the component.
c. Allows proper packaging of the component for handling, packing, shipping, storage and installation.
d. Eliminates the need for the component manufacturer to provide the electrical cable to a distant, unknown junction point.
e. Provides a proper interface for the maintenance and replacement of components and cables.
f. Provides an interface between components in a complex system.
g. Facilitates the manufacturing and assembly process of components.
h. Allows the hermetic or watertight sealing of an electrical component package.
i. Facilitates the hydrostatic pressure testing of outboard electronic components or electrical penetrators.

An electrical connector is made up of a plug and a receptacle assembly as shown in figure 3-2. The heart of the connector is the pin and socket contacts. These two components make the electrical junction. Although in standard nonpressure proof designs, these contacts may be located in either the plug or receptacle; pin contacts are normally located in the receptacle, and socket contacts in the plugs in pressure proof connector designs.

Most underwater connectors in use today can be divided into four types based on construction material, and can be described as follows:

a. Metal plug and receptacle
b. Molded rubber plug and receptacle
c. Plastic plug and receptacle
d. Underwater disconnectable (make and break) connectors.

This section discusses the recommended pressure proof connector designs as well as design parameters for connectors which must be considered in any connector development program. The connector recommendations are a result of the work conducted on the Deep Ocean Technology program.

3.2 ELECTRICAL CONNECTOR TYPES

3.2.1 METAL SHELL CONNECTORS -- The metal construction which provides a rigid skeleton has demonstrated the greatest degree of reliability on submersible equipments. The nature of the design requires more component parts, is heavier and has greater initial cost. However, these disadvantages are more than compensated for by its higher degree of reliability and its resistance to installation and environmental damage. The added initial cost becomes insignificant when related to the overall system cost and the critical role a connector plays in a system's satisfactory function. A single connector failure can abort an entire mission.

The metal plug shell provides a rigid and adequate bonding surface for the cable seal and thus provides adequate cable strain relief at this point. The rigid construction makes possible a greater degree of wire position control in molding a cable to the plug, and therefore, much less change of electrical shorts or opens due to uncontrolled migration of conductors during the cable end sealing process. The metal shell provides a positive stop for controlled gasket squeeze in seal areas between plug and receptacle and between receptacle and mounting surface. Metal has the necessary strength and dimensional stability to provide reliable threaded parts. A metal receptacle shell provides the necessary support for a positive and reliable pressure barrier in case of accidental exposure to sea pressure. Metal construction provides for a more reliable mounting of bulkhead types and an additional mounting method; a seal weld. An individual insulator in combination with snap-in socket contacts provides good contact positioning with adequate flotation for proper mating alignment. Metal bodies are best adapted for a positive keying arrangement to polarize plug with receptacle. Where both plug and receptacle shell are of a nonresilient material, a more reliable coupling can be accomplished. Elastomer compression set and material flow with resulting loosening is not a problem.

3.2.2 MOLDED PLASTIC CONNECTOR -- The molded thermosetting resin type of connector construction, figure 3-7 is relatively inexpensive and ideally suited to production in quantity. It has many of the same advantages of the all rubber type. These include: fewer components, integral molding requires no internal seals, no insulators are required as the structural material is a good dielectric, the material is not affected by salt water corrosion and can not form a galvanic couple to damage adjacent metal parts.

However, experience has indicated that plastics have many deficiencies as a connector fabricating material. Any one specific thermoplastic or thermosetting resin material does not seem to combine the desirable electrical properties with all the required physical and mechanical properties necessary for use as a deep submergence connector. Some of these properties include a high degree of dimensional stability, high impact strength, low mold shrinkage, low water absorption, high compressive strength and non-flammability.

Fabricating requirements further limit the material choice. These include good moldability, with any necessary reinforcing fiber content, at reasonable temperatures and pressures. Some of the more common defects found in molded connector parts include the following: Cracks at points of high stress which are generated in the molding process and proliferate with use; threads that fail under load or are damaged by impact; failure in areas that mold resin rich and lack the necessary fiber content; seal surfaces that do not present the required finish due to excessive flash or porosity; molded connectors exposed to higher levels of pressure cycling have shown evidence of minute fiber displacement followed by fatigue and eventual structural failure.

Disadvantages of the metal type connector include the need for additional individual contact seals which are inherent in the integrally molded rubber type connector. Sealing surfaces are subject to damage causing possible seal failure. Metal parts are subject to varying degrees of corrosion depending on material choice and environment. This condition can be compounded by other interfacing metals and/or stray electrical currents.

Insulating components must be provided for electrical isolation of the conductors. Means of securing and sealing these parts must also be provided. Applications that require the metal connector to be subjected to a considerable degree of pressure cycling call for special attention to the manner of wiring and how the conductors are supported in the back end of the plug between the cable end seal and conductor termination. Otherwise, fatigue failure of the conductor can occur. Where nonresilient parts interface at plug and receptacle, a minimum volume void is always present because necessary dimensional tolerances preclude interfacial contact at this point. This void can account for some electrical degradation due to condensation of moisture in contact area. This can be significant depending on application and environmental temperature and humidity ranges. Contact insulation composed of compression glass seals must be adequately protected from welding temperatures when components are fastened or sealed by this method.

A representative connector of the metal type is shown in figure 3-6.

A distinct disadvantage of this form of construction lies in interfacing various cable types with a molded resin plug. The effectiveness of the cable end seal is limited by bondability, and cable temperature restrictions.

The molded plastic connector has exhibited serious design deficiencies to date, expecially for higher pressure applications. However, it is not inconceivable that the proper combination of material and design would produce a satisfactory connector for low pressure application.

3.2.3 MOLDED ELASTOMER CONNECTOR -- The molded or cast elastomer type of connector construction, figure 3-8, provides the least expensive type of underwater connector. Basically, this type of connector consists of a length of cable whose conductors are terminated with male or female contacts. The entire terminal area is molded or cast integral with the cable jacket. The contacts are positioned by external means until curing or vulcanizing is complete. The geometry of the molded area is such as to provide a sealing interface between plug and receptacle and

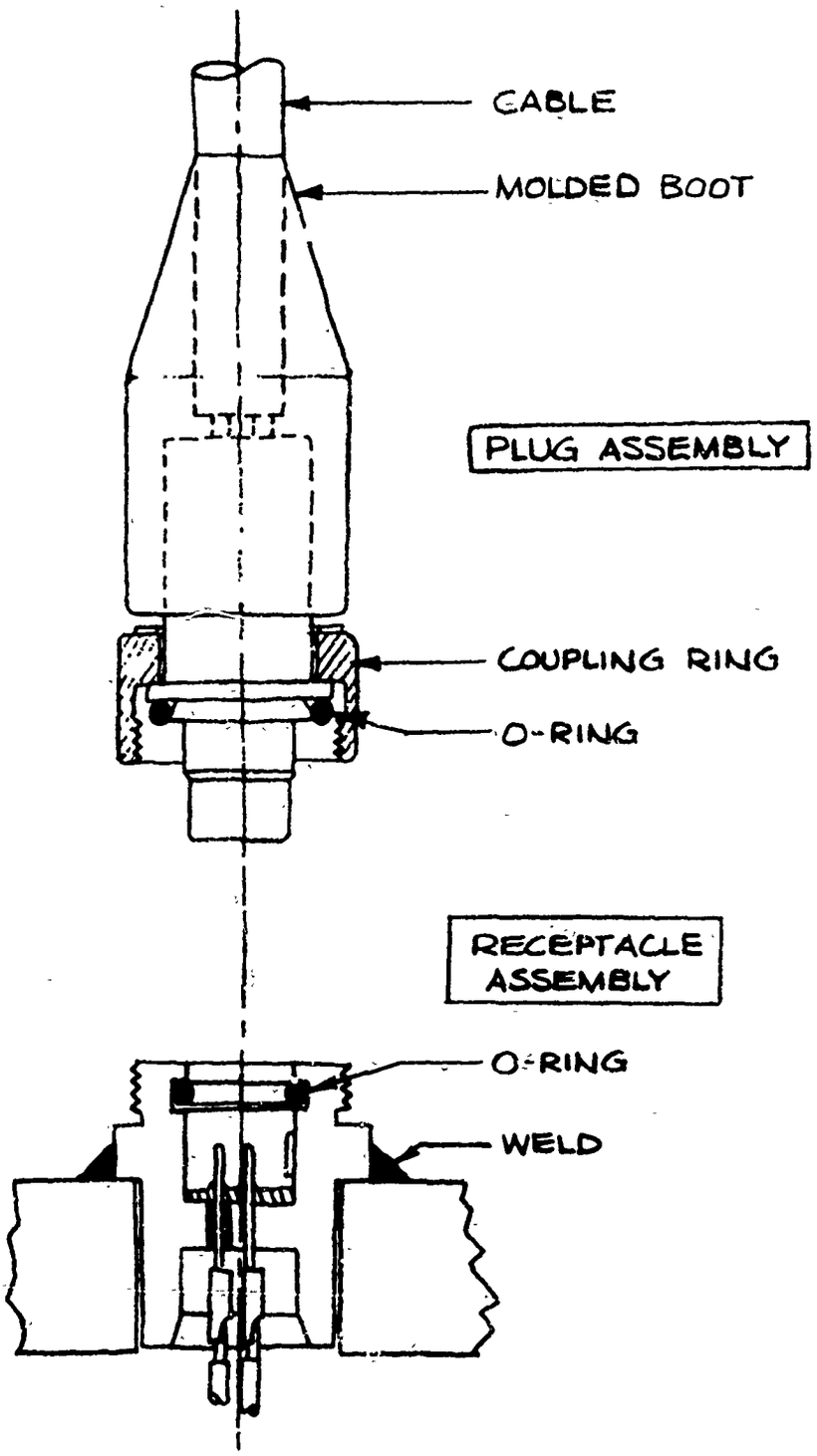

Figure 3-6. Metal Shell Connector

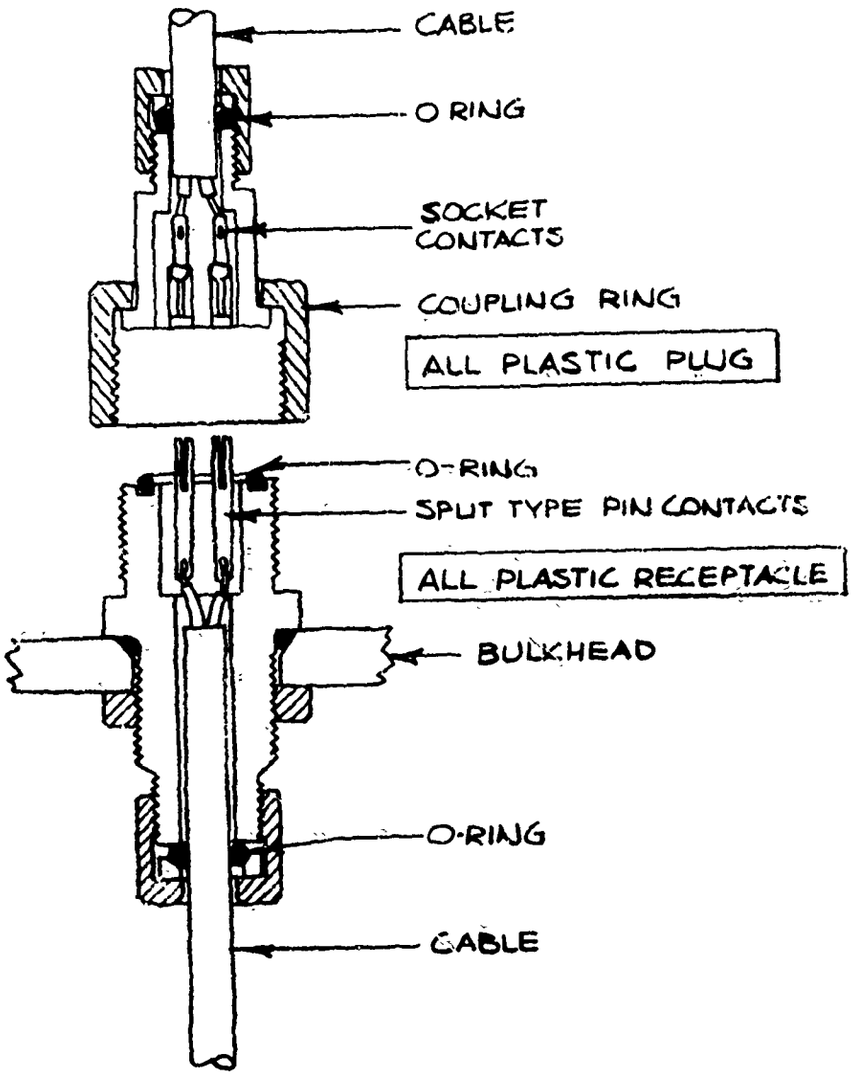

Figure 3-7. Molded Plastic Connector

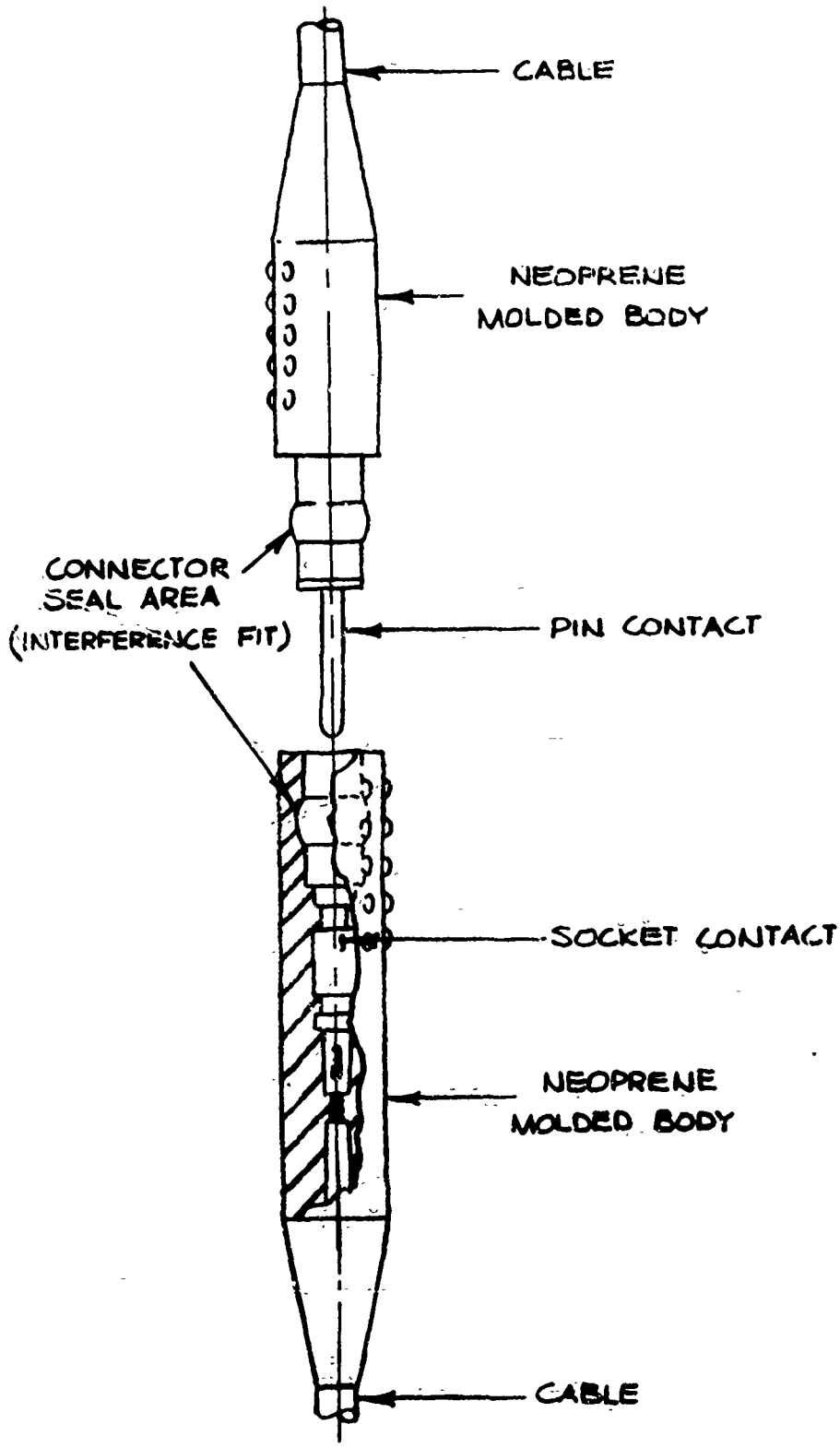

Figure 3-8. Molded Elastomeric Connector

provide for strain transition between contact area and cable. Due to the resilient qualities of the material used, relatively thick sections are required to provide adequate polarization between plug and receptacle. This results in a large connector. For this reason, polarization, where present in this design, is normally accomplished by contact pattern or two contact diameters. Either method is inadequate because electrical contact between plug and receptacle is possible prior to proper alignment and mechanical locking. For this reason, this type of connector is vulnerable to electrical mismating and contact damage.

The materials most often used in fabricating this connector are neoprene, for pressure molding, and polyurethane for cast molding. The neoprene molded connector is superior in several design areas. However, the inability to properly control movement of the conductor during the pressure molding process can lead to electrical opens and shorts that very often occur after the connector sees the operating environment. Thus, reliability is seriously affected.

The all rubber type of connector, not having a rigid internal or external structure, does not provide for positive and controlled compression of interfacial seals. For the same reason, most coupling and mounting devices are marginal because the material is subject to compression set. Seal failure can also occur when the connector is mated in a low temperature environment, due to loss of elasticity. Most designs have little or no protection for pin contacts.

This type of connector construction is not without certain advantages. Among these are low cost, light weight, capability of withstanding considerable abuse, and because it is integrally molded, fewer seals are required. Both plug and receptacle withstand open face pressure equally well. No material corrosion problem exists with this connector type. The material being a dielectric precludes its contributing to galvanic corrosion of adjacent areas. Obviously, no separate insulating parts are required. The resilient material provides for a void-free interface between mated plug and receptacle.

3.2.4 UNDERWATER DISCONNECTABLE CONNECTORS -- Underwater disconnectable or make and break connectors are a definite requirement for Deep Submergence Vehicle applications. For instance, it is advantageous for divers to have the capability to disconnect camera and light housing while the vehicle is still in the water. This allows replacement of film and lights on a routine basis without the need to haul the vehicle from the water. Another disconnectable connector requirement is one time electrical disconnect that is required when emergency drops are made of outboard mounted equipment such as batteries and manipulators. These equipments would be disconnected from the vehicle when a vehicle emergency rise to the surface is required. In the case of manipulators, it may also be necessary to drop them should they become entangled during underwater operations.

The USN is presently conducting studies under the Deep Ocean Technology program to develop make and break electrical connectors for underwater applications. Design, fabrication and test work is presently underway. Results of this design activity will be included in the next edition of the Handbook.

3.3 CONNECTOR DESIGN RECOMMENDATIONS

3.3.1 CONNECTOR CLASSES -- Similar to recommended penetrator designs, three basic connector classes are seen to satisfy the DSV oceanic environments. These include the 0 to 2,000, 0 to 20,000 and 0 to 37,000-foot operating depths. For each operating depth, many types and sizes of connectors are required to satisfy signal, control, power, and radio frequency requirements. Those have been defined in section 1 of the Handbook.

While the primary design work noted in this Handbook is devoted to the 0 to 20,000-foot operating depth class, discussion is also made on the other operating depth classes. Further design and development work will be conducted in these areas as funds become available and the need arises.

3.3.2 CONNECTOR DESIGN - 0 TO 20,000 FEET AND 0 TO 37,000 FEET -- The basic connector design recommended for 0 to 20,000 and 0 to 37,000-foot operating depths is shown in figure 3-9. The only basic design change between the two, is additional plug and receptacle shell material required for the 37,000-foot depth connectors. The use of titanium plug and receptacle shells is suggested for corrosion resistance and strength to weight ratios of the material. It will be noted that both plug and receptacle have compression glass sealed and insulated pin contacts which withstand the full operating depth pressures. The plug is fitted with double ended socket contacts on the front end and a crimp type socket contact on the rear end.

The double ended socket contacts are insulated with a silicone compound and the rear end of the plug is insulated with a glass filled epoxy compound. This potting material also serves as a strengthening agent for the conductors which emanate from the cable. The potting compound is housed in an aluminum backshell to which a grommet type cable sealing clamp is also fitted. The grommet holds the epoxy inside the aluminum cavity during the potting operation. A polyurethane boot is cast over the cable prepotted area and the plug shell to provide the desired cable to connector seal. Although a 90 degree plug is shown in the figure, straight plug designs can also be used. The plug is sealed to the receptacle with redundant gasket and radial type O-rings. A titanium coupling ring is used to engage and disengage the plug from the receptacle.

The titanium shelled receptacle houses the radial O-ring seal as well as the polarizing keys. A crimp type socket provides the desired electrical connection at the rear of the receptacle. The contacts are insulated with a silicone rubber insert. As seen later in this section (figure 3-15) many receptacle mounting methods are available. Figure 3-10 shows a receptacle design with a removable header insert. This design allows added flexibility in changing contact patterns. It also allows sealing contacts in header insert materials other than titanium.

3.3.3 COAXIAL CONNECTOR DESIGN -- The coaxial connector design recommended, is shown in figure 3-11. The design is similar to the 20,000-foot connectors as titanium is used to fabricate the plug and receptacle shells as well as the coupling ring. The inner and outer contacts located in the receptacle are sealed and insulated with compression glass.

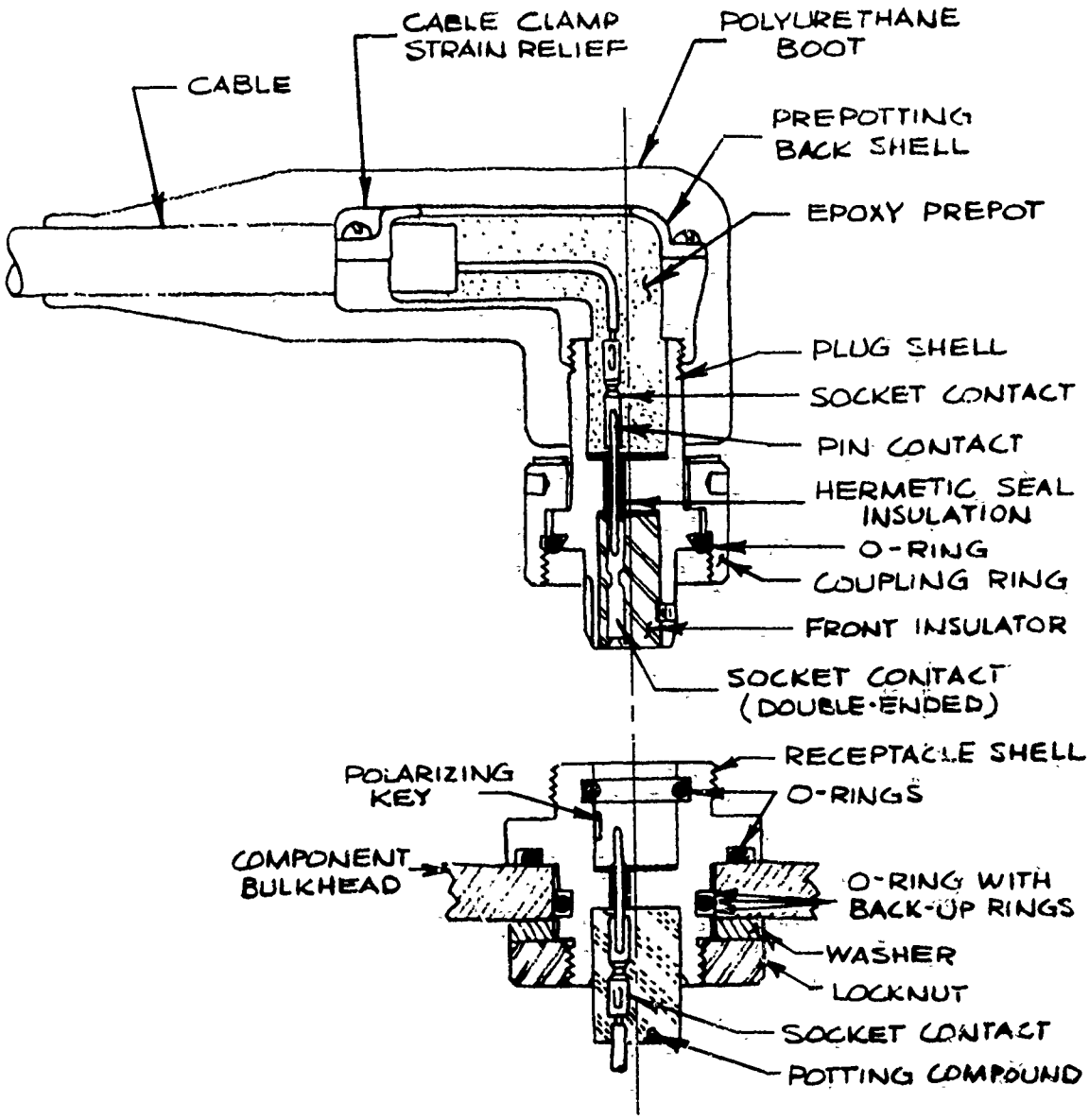

Figure 3-9. Recommended G-20,000/37,000 Foot Depth Connector

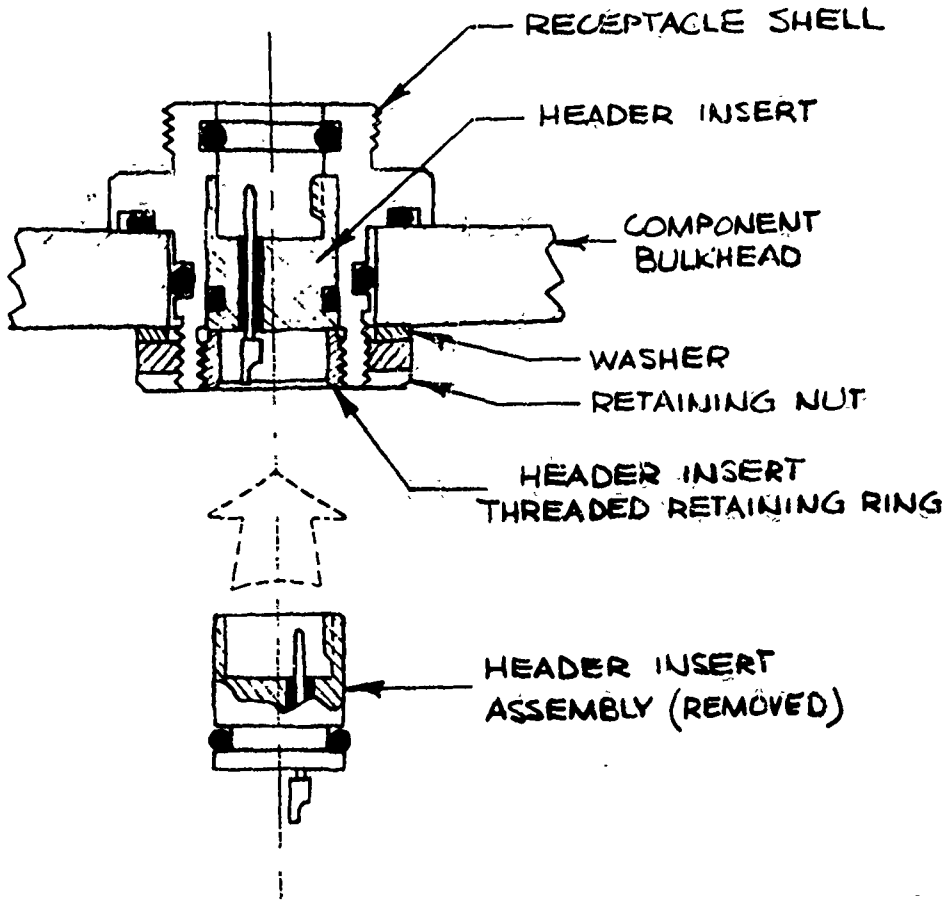

Figure 3-10. Recommended 0-20,000/37,000 Foot Depth Receptacle with Removable Header Insert

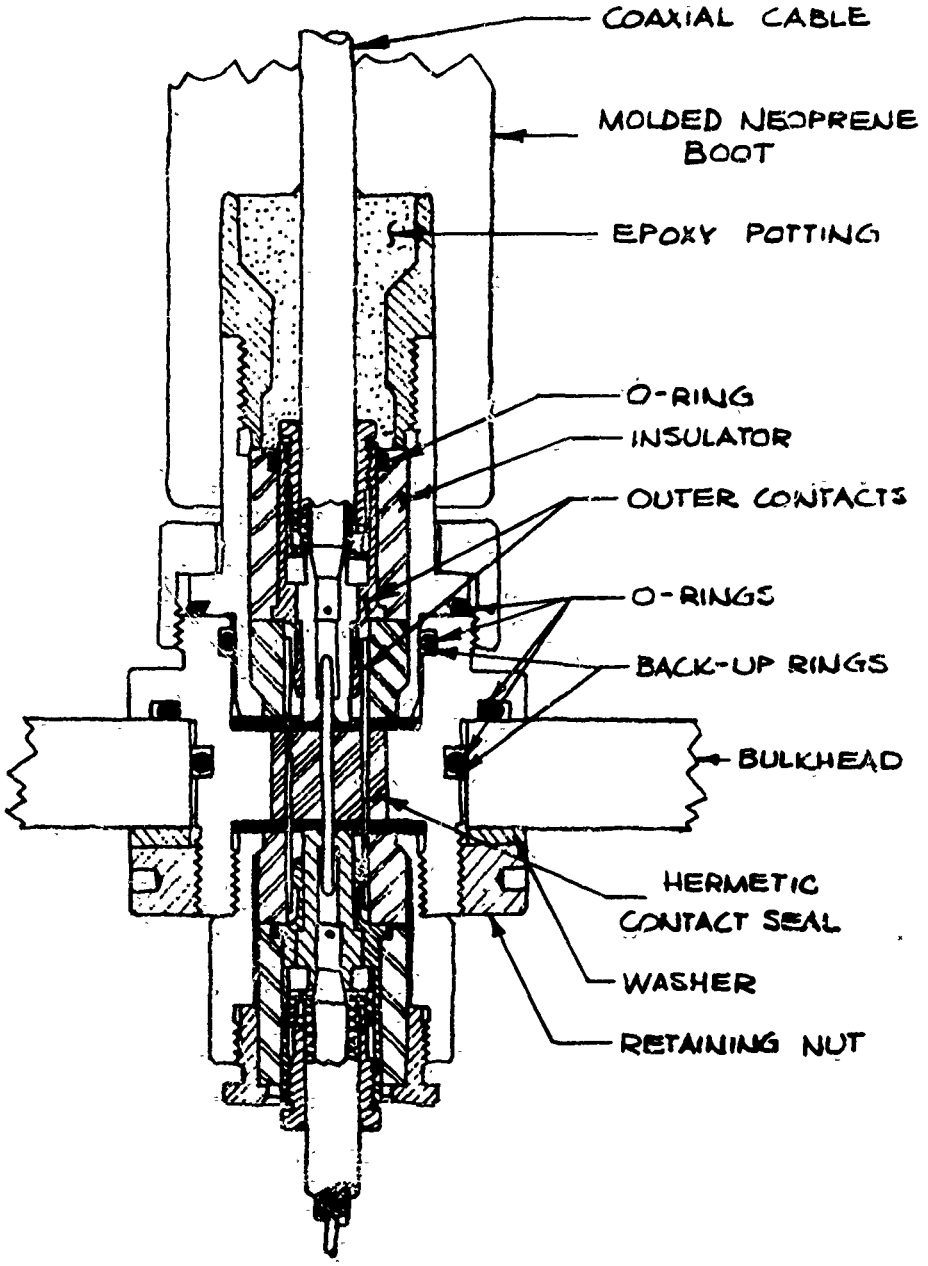

Figure 3-11. Recommended Coaxial Connector Design

3.4 CONNECTOR DESIGN PARAMETERS

The primary function of a pressure proof electrical connector is to provide a watertight interconnection point for a harness at the outboard component and at a hull penetrator. The connector also seals the cable at these enclosures and prevents the cable from being forced into the enclosure due to the hydrostatic pressure at various ocean depths. As seen earlier, four basic connector design types have been used to satisfy vehicle connector requirements. This section discusses the USN's recommended use of all metal connectors for depths to 20,000 feet. The designs discussed here employ the use of Deep Ocean Technology Program developed elastomeric jacketed cables (see reference 6). However, with minor modifications to the rear of the connectors, the designs recommended can be adapted to also use metal jacketed mineral insulated, polyethylene jacketed, oil filled, and free flooding individually insulated conductors.

This section covers the design of electrical connectors recommended for use on DSVs. The development of a connector requires the consideration of many design factors. These are listed in table 3-1. Together with these basic design factors, there are many design considerations which strictly apply to electrical connectors. These are as follows:

a. The connector, in order to preserve the watertight integrity of the component to which the connector is mounted, must have a positive contact water dam in the receptacle to prevent water from entering the component.

b. There should be a backup seal for every primary seal used in sealing a receptacle to a component. This is not necessary, however, if the receptacle is welded to the component housing.

c. Configuration and materials of construction should provide inherent resistance to electrolytic corrosion resulting from stray leakage current. Very slight differences in potential can erode relatively thick metal sections in a very short period of time.

d. The possibility of a critical degree of galvanic coupling must be considered when making a material choice for the connector parts. Areas that interface with each other should be such as to prevent entrapment of sea water which may lead to crevice corrosion.

e. The method of securing the plug to the receptacle should also provide for easy removal.

f. Adequate wire or cable strain relief must be provided at the cable-to-plug or receptacle interface.

g. The receptacle design must be such that the receptacle web section can be hydrostatically tested prior to shipment by the fabricator.

h. All wire terminations within the plug or receptacle cavity at the rear should be sealed and supported. This combined moisture barrier and strain relief is readily accomplished by potting compounds.

i. A positive water barrier in the plug assembly is recommended. Should the cable be damaged or severed, then water will course up the cable only to the barrier in the plug. As a result, the receptacle-plug interface will remain unaffected.

Table 3-1. Electrical Connector Design Factors

1. Connector Types and Sizes
2. Configuration - Connector
3. Plug Design
4. Receptacle Design
5. Pin and Socket Contact Design
6. Fastening - Plug to Receptacle
7. Sealing - Plug to Receptacle
8. Connection - Conductor to Socket Contact
9. Insulation and Seal - Pin Contact
10. Insulation and Seal - Socket Contact
11. Seal - Cable to Plug
12. Electrical Requirements
13. Cable Strain Relief
14. Material Selection
15. Corrosion Properties
16. Fabricability
17. Safety
18. Strength
19. Stiffness
20. Thermal Properties
21. Cost

j. The receptacle or plug contact water barrier which may be inadvertently exposed to sea water should withstand a test pressure in the exposed condition of at least one and one-half times the operating pressure. Receptacles and plugs in which the contacts are compression-glass sealed very effectively satisfy this requirement.

k. The ideal connector configuration provides for packaging a high conductor density in a minimum envelope having minimum projection from the component being connectorized.

l. Excess connector weight must be avoided. Any excess weight reduces the submersible's payload pound for pound.

m. The receptacle should be polarized to the component, if at all possible.

n. Redundant seals should be provided between the plug and receptacle interface.

o. The connectors should be non-proprietary.

p. Connector contact resistance should be kept low as practicable.

q. The connector assembly should be capable of operating satisfactorily in an air or sea water environment.

r. Mating plugs and receptacles should be scoop proof. (The front face of the plug should not hit against the pin contacts when the plug passes across the front face of the receptacle.)

s. The connector assembly should have a minimum ten year service life.

t. The connector assembly, when mated to a cable, should be capable of withstanding 2000 hydrostatic pressure cycles at the specified operating depth.

u. The connector should be designed to withstand at least 100 matings and not show wear which would be detrimental to the connector's operation, electrically or mechanically.

v. The connector plug boot should have strain relief to withstand repeated flexing and maintain a watertight bond between the cable/boot transition and the watertight bond between the boot/plug shell transition.

w. Mated receptacles and plug/cable harnesses should be able to withstand a high impact shock test and a vibration test without physical damage or significant discontinuities in the electrical circuits and/or loosening of mated component parts.

x. In no case should the connector be designed so that elastomeric material relaxation may permanently endanger the pressure holding ability of the seal.

y. Protective covers should be provided on all plugs and receptacles to protect the harness and penetration components against contamination or handling, transportation, and installation damage.

z. Two polarizing keys should be provided each receptacle to match two keyways provided on each plug shell.

aa. Straight and right angle cable entry at the rear of the plugs should be provided.

ab. Plug-to-receptacle seal should be provided and be composed of automatic squeeze type gaskets (O-rings).

ac. A receptacle to component seal method should be provided.

3.4.1 CONNECTOR CONFIGURATION -- The connector design should be cylindrical due to external hydrostatic pressure resisting requirements, the relative ease of sealing the cylindrical plug-to-receptacle components, and the ease of fastening offered by cylindrical components. Plugs for straight and right angle cable entry should be developed. The right angle plugs are an undesirable, but necessary component; they are more difficult to fabricate, wire, and mold but in many cases can save valuable space. Naturally, connector diameters should be kept as small as practicable for weight and space considerations.

3.4.2 CONNECTOR TYPES AND SIZES -- Connector shell sizes should be kept to the smallest number possible. Every effort should be used to make one shell size accommodate more than one pin configuration, but not to the detriment of physical and electrical characteristics of the connectors. Table 1-2 lists the connector contact configurations required for recommended cable types and sizes. Table 3-2 shows a tabulation of eight shell sizes and recommended contact configurations for each size. Table 1-2 also shows the justification for the sizes selected. Dimensional sizes of the connectors can be compared roughly with the list of connectors for the size 16 contacts and equating this to the diameter of MIL-C-24217 connectors.

The diametral requirements for connectors in general are dependent upon the size of the electrical contacts and the connector contact complement. With this factor remaining constant for all classes of connectors, the other dimetral considerations are the various hydrostatic pressure requirements. Because this last consideration has the greatest effect upon connector weight, the greatest possible weight saving will be made by using titanium for shell material, rather than the more conventional stainless steel. Connectors for higher pressures should be made from lighter and stronger titanium and, therefore, will be about the same overall diameter as the MIL-C-24217 connectors.

Table 3-2. Recommended Connector Shell Sizes

SHELL SIZE	NUMBER OF CONTACTS AND SIZE						
	20	16	12	8	4	0	0000
1		1	1				
2	5	3		1			
3	10	5	3		1		
4	14	9				1	
5		14		3			
6		24			3		1
7	85	48				3	
8							3

Proper connector design plays a greater role in determining connector length than does submergence pressure. Major considerations along this line include:

a. Provide sufficient length for proper engagement of the contacts and for plug and receptacle lead in for straight mating of plugs and receptacles.
b. Make the polarizing key long enough to ensure correct entrance and contact engagement.
c. Make the plug shell long enough to contain the elastomer boot bond and a hermetic water block with contacts.
d. Provide enough space for a back shell potting attachment.

3.4.3 ELECTRICAL REQUIREMENTS -- It has been determined from table 1-2 that dielectric withstanding voltage requirements for control and signal circuits on DSV's are minimal. As a result, connector designs to service these type circuits will have a test voltage of 1,000 volts and a service rating of 300 volts. At the present time the maximum operating voltage for circuits of this type is 120 volts. The power type connectors will have a test voltage of 1,900 volts and a service rating of 600 volts. At the present time the maximum operating voltage for DSV power circuits is 440 VAC (rms).

The proper sizes of contacts to satisfy DSV requirements have been selected and are shown in table 3-2. Electrical connectors should be designed to number 20, 16, 12, 8, 4, 0 and 0000 size contacts to suit the various amperage requirements of electrical/electronic circuits used on DSVs (see table 2-2). The current carrying capacity of the materials used in electrical connectors is compared in table 3-3 with copper. As molybdenum is recommended in this design program for the pin contact in the glass sealed connector components, it can be concluded that the current carrying capacity will be improved over presently used steel pin contacts.

Table 3-3. Conductor Current Carrying Capacity as Compared to Copper

MATERIAL	PERCENT CONDUCTIVITY
Copper (99.95% pure)	100
Molybdenum	33
Brass	26
Steel (B1113)	12
Cadmium Chromium Copper	90

3.4.4 PLUG DESIGN -- The plug should be cylindrical and, in most cases, should house six socket contacts, sealed and insulated in a plastic elastomeric, or glass insulator housing. The plug should have a threaded coupling ring and house the necessary plug-to-receptacle seal. A plug-to-receptacle polarization keyway should be provided. The necessary conductor strain relief device should be designed to withstand the full hydrostatic pressure loading as should the plug shell flange which is bottomed against the face of the receptacle. Material selection is a primary consideration in the plug design.

At the rear end of the plug pin contact, a crimp type socket contact should make the transition to a conductor. The front contact should be a double ended socket contact sealed inside a silicone insulator.

At the rear of the plug web, a socket contact should be embedded in a material of high bulk modulus and high compressive strength. This provides support for contacts and conductors when they are subjected to high hydrostatic pressure loading. Tests conducted by the USN have shown this area to be one of the most critical in the design of a pressure proof connector Cyclic hydrostatic pressure loading of connectors has resulted in Z kinking and fracture of conductors inside the plug shell in the area. These conductor failures have been attributed to the use of low bulk modulus potting materials such as neoprene, or voids existing inside the plug shell allowing the conductors to bend and subsequently break. As a result, much design attention must be focussed in the connector-cable interconnection area. The use of filled epoxy compounds as recommended in section 4 is felt to be mandatory to provide the proper structural support for the conductors. References 7 and 8 provide further documentation for this problem area. Figure 3-12 shows typical conductor kinking when unsupported and subjected to hydrostatic pressure loading.

All plug shells should have a feature enabling them to adapt to either a right angle or straight cable support and prepotting-form back shell. The proposed right angle prepotting-form back shell can be positioned to give any desired exiting cable angular attitude. This angular attitude is the positional relationship between the existing cable plug boot and the plug polarizing keyways. The back shell cable clamp should be designed to accommodate a moderate range of cable diameters. Outsized cable diameters require a special clamp and prepotting back shell.

3.4.5 RECEPTACLE DESIGN -- Receptacles should be cylindrical. This shape is least expensive to machine and lends itself to fastening and sealing more readily than other configurations. Glass sealing manufacturing procedures are better adaptable to circular receptacles. The receptacle should house one plug-to-receptacle seal and provide a sealing surface for the second seal. It should also provide a thread for fastening the plug to the receptacle. Polarizing keys for the plug/receptacle assembly relationship should be a part of the receptacles. A water barrier should be provided for in the receptacle at the web section. Methods of fastening receptacles to components should be by use of a bolted flange, welding, or by a lock nut and flange. See figure 3-13.

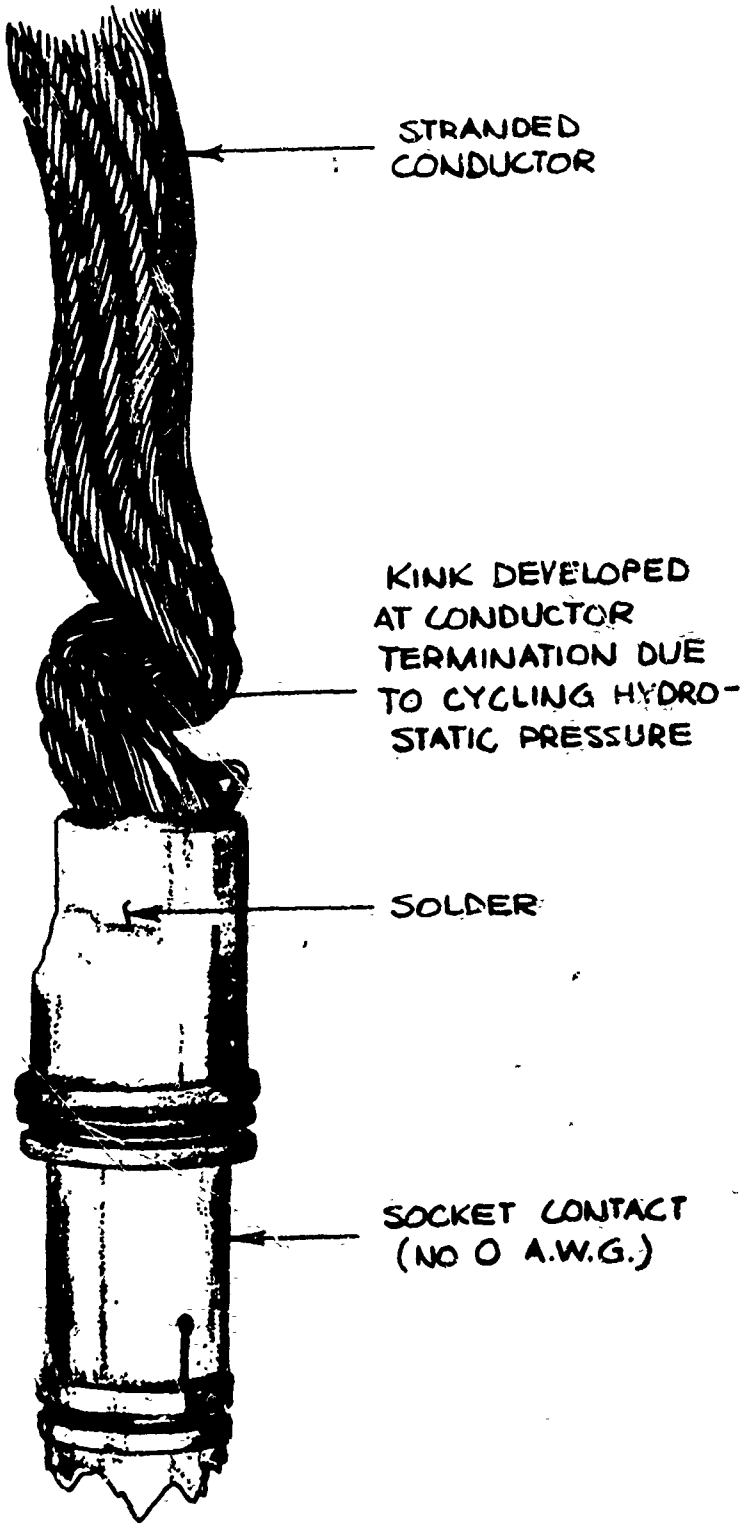

Figure 3-12. Typical Conductor Damage Due To Cycling Hydrostatic Pressure

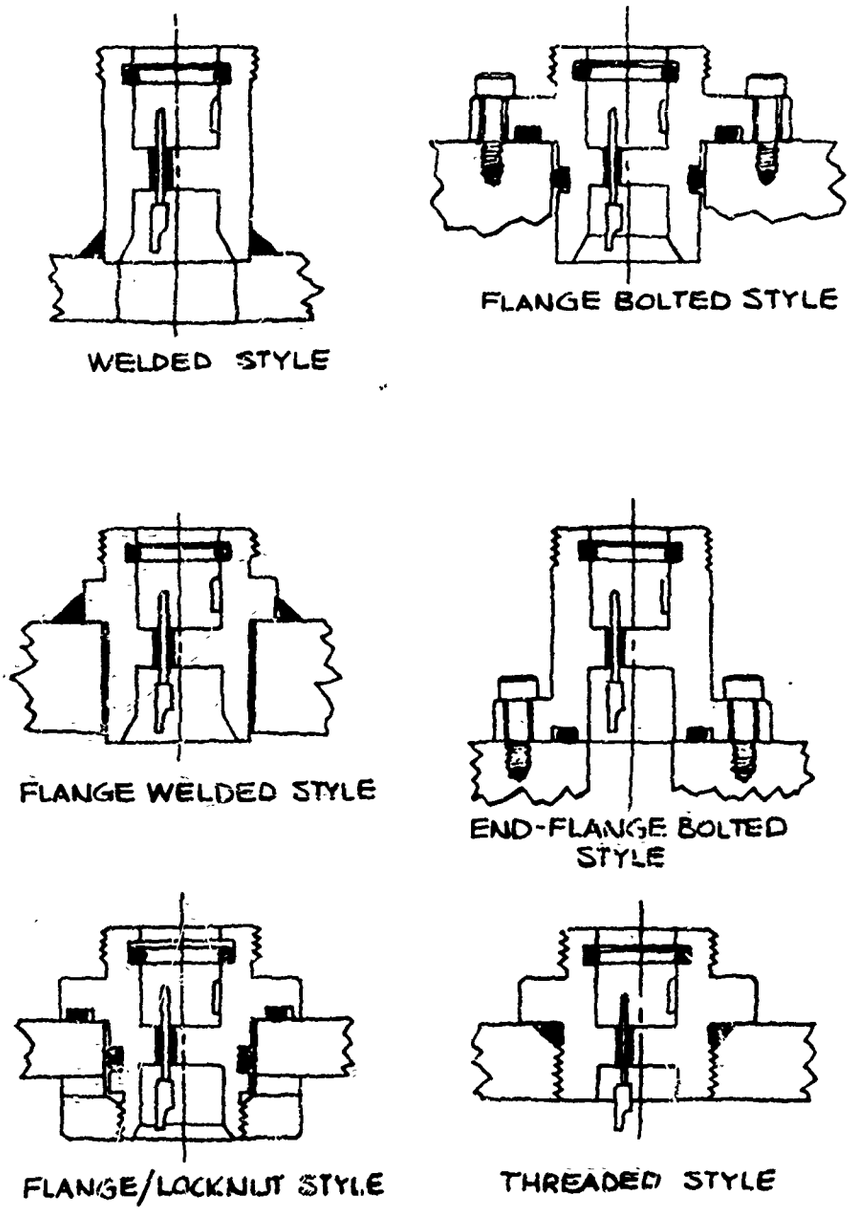

Figure 3-13. Receptacle-To-Component Fastening Methods

With respect to the plug-to-receptacle mating sequence, the following mating sequence steps are recommended:

a. The plug is polarized to the receptacle with the use of keys and keyways. There is neither pin-socket electrical contact engagement at this juncture; nor coupling of the plug to the receptacle.
b. The plug and receptacle having been polarized, the plug coupling ring now engages the threads of the receptacle.
c. As the coupling ring is fastened to the receptacle, the pin contacts begin engaging the socket contacts, and electrical engagement takes place between the pin and socket contacts.

Another important requirement in the plug receptacle design is the need for a scoop proofness. As seen in figure 3-14 the plug shell should not be capable of contacting the pin contacts in the receptacle under any other than properly aligned mating conditions. This is especially important for the smaller size contacts such as 20 or 16 AWG.

3.4.5.1 WELDING TITANIUM RECEPTACLES -- Titanium alloy (TI-6AL-4V) can be welded with a high degree of reliability and the welds have the same high degree of corrosion resistance as the base metal in a sea water environment (see reference 9). Fusion welding either by the TIG or MIG process can be accomplished with or without filler wire. The more important factors in welding TI-6AL-4V are joint preparation, fit-up, and shielding of the weld and heated zones to preclude pickup of contaminants from the air by the molten or hot titanium. Shielding may be accomplished by flooding the area immediate to the weld with an inert gas or may be accomplished by welding in a chamber filled with an inert gas and purged of the common contaminants, oxygen, hydrogen, nitrogen and carbon. Both metal and filler wire must be thoroughly cleaned. The weld should be blanketed at the top and bottom with inert gas. Metal degreasing should be accomplished with alcohol or acetone. Never use steel wool or sand paper for dirt removal. A clean stainless steel brush should be used for this purpose. The filler wire should be cleaned and the end removed just prior to use. Wire feed should be continuous, not dabbed. Careful shielding is essential to successful welding, and helium or argon must replace the air at both top and bottom of the weld.

Resistance welding of TI-6AL-4V is also possible and techniques are much the same as would be used for stainless steel. Inert gas protection is not necessary due to the proximity of the mating surfaces. Electron beam welding can also be used with this alloy.

Fusion welding by the TIG method is recommended for use on glass sealed contact connectors discussed in this section. The method permits intense localized heat buildup without excessive heat buildup in the area of the glass seal which could be damaging to the glass. TIG produces a superior weld with the temperature restricting conditions imposed by the connector weld procedure.

3.4.6 MATERIAL SELECTION -- Selection of plug, receptacle shell and coupling ring materials is one of the most important design decisions to be made. The materials used affect the size, weight and projected life of the components. The most desirable materials are those with high

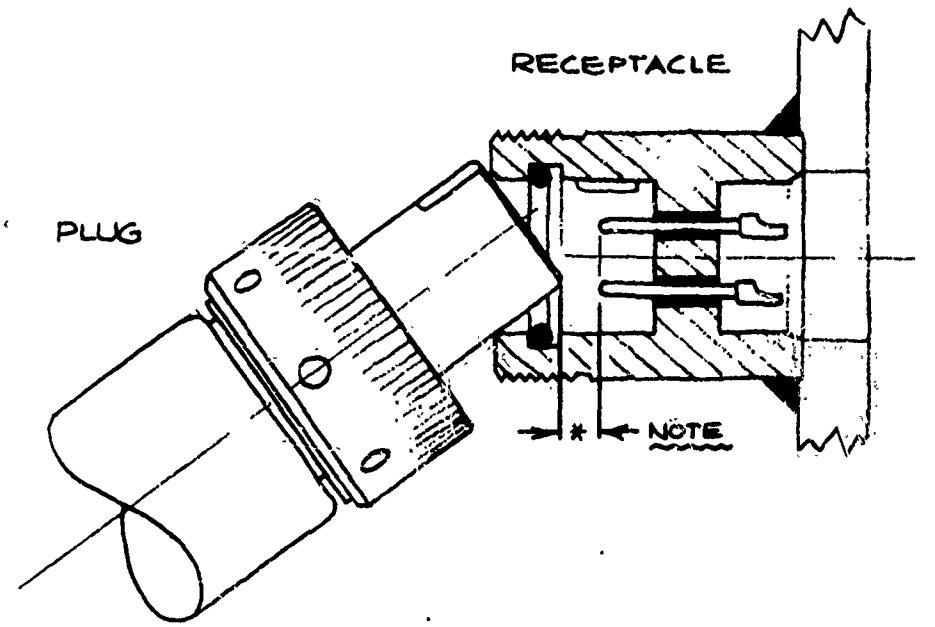

*NOTE: PLUG SHELL SHOULD NOT BE CAPABLE OF STRIKING PIN CONTACTS IN RECEPTACLE WHEN INSERTED OFF-AXIS

Figure 3-14. Scoop-Proof Connector Requirement

corrosion resistance; specifically Inconel, Hastelloy C, and titanium alloys which have demonstrated the highest resistance to crevice corrosion attack in a sea water environment. It will also be noted that these materials also possess excellent mechanical properties because their ultimate tensile strengths are in excess of 100,000 pounds per square inch. These materials will assist in keeping the connector weight and size to a minimum. Non-metallic materials can also be considered. Although the mechanical properties of most of the plastics cannot be compared with metals, many do offer excellent corrosion resistance as well as weight savings. Some of their limitations, however, include relatively low impact strengths as well as poor moisture absorption and aging characteristics.

The use of titanium for the pressure resisting components of connectors and penetrators because of its physical and corrosion resisting properties is presented elsewhere in this handbook (section 5). When weight and space saving are desirable, they can be best obtained through the use of a lightweight, high strength material such as titanium, because other lightweight materials do not have the strength or as good corrosion resistant properties. Table 3-4 is a listing of specific gravities of materials which can be considered in connector and penetrator design.

3.4.7 PIN AND SOCKET CONTACT DESIGN -- Pin and socket contact configurations, specific resistivity of materials, plating, dimensional tolerances, surface finish, hardness of metal and conductor termination and design are all important considerations in the development of an electrical connector. Contacts should have low specific resistivity and should approach the current carrying capability of copper (see table 3-5). Pin and socket contacts in the sliding area should be gold plated in accordance with MIL-C-45204 and underplated with a copper flash (reference 11). Surface finishes are to be smooth to ensure a mating action which will not tear or scratch the contact and at the same time provide maximum surface engagement between the pin and socket contact. Every effort will be made to use standard contact configurations. The most logical choices are MIL-C-22857, MIL-C-39029, and NAS 1599. These contacts should be used with standard MS crimping tools TIL-T-22520 and MS 3191. Where glass insulation is used, the glass-sealed contacts should be fabricated from molybdenum. Brass and bronze should be used when pressure requirements do not call for the glass or ceramic insulations. Molybdenum is preferred over the conventional B1113 steel because the contact resistance is lower and the pins are stiffer and not so easily bent or damaged. See table 3-6. When glass-insulated pins require the use of solder pots, they should conform to the requirements of MIL-C-5015. Contact sizes larger than 16 size should conform to the requirements of MIL-C-5015. Table 3-7 gives the contact pin diameters that should be used in all connector groups.

3.4.8 CONNECTION - CONDUCTOR TO SOCKET CONTACT -- The cable conductors can be electrically connected to the socket contact pins by solder, crimp, or taper pin insertion. All of these methods are compatible with the connector design, considered from a space viewpoint. Welded, clamped, or wire wrap methods are not seriously considered because of the relatively large space required to make a multicontact assembly.

Table 3-4. Approximate Specific Gravities of Materials

SUBSTANCE	SPECIFIC GRAVITY
Gold	19.3
Rhodium	12.4
Lead	11.3 - 10.7
Silver	10.5
Molybdenum	10.2
Brasses, Yellow	9.96 - 7.70
Copper	8.95 - 8.89
Hastelloy C	8.95
Cupro-Nickel (70-30)	8.94
Silicon Bronze	8.91 - 7.09
Phosphor Bronze	8.88 - 8.74
Tin Bronze (Cast)	8.85 - 8.60
Monel	8.84 - 8.48
Berylco 717 (Be-Cu-Ni)	8.81
K Monel (Ni-Cu-Al)	8.49
Admiralty Brass	8.52
Inconel 625	8.44 - 8.08
Leaded Naval Brass	8.44
Naval Brass	8.41
Manganese Bronze	8.36
Beryllium Copper	8.24 - 8.18
Cr-Ni-Fe Superalloy	8.17 - 7.88
Stainless Steel (Aus)	8.02 - 7.75
216 SST	7.95
HY 90, 100, 150, & 230 Alloy Steel	7.9
Armco 22-13-5 Stainless Steel	7.9
Carbon Steel	7.83
17-4 PH Stainless Steel	7.79
Stainless Steel (Fer)	7.75 - 7.47
Stainless Steel (Mar)	7.75
Wrought Iron	7.69
Tin	7.30 - 7.25
Zinc	7.17 - 6.64
High Lead Glass	6.22

Table 3-4. (Cont'd)

SUBSTANCE	SPECIFIC GRAVITY
Titanium	4.73 - 4.43
Epoxies (Cast) Ht Res	3.2 - 1.15
Phenolics (molded)	3.0 - 1.24
Aluminum Alloy 6061	2.71
Epoxies (Cast) GP	2.4 - 1.12
Borosilicate Glasses	2.3 - 2.1
TFE Flurocarbon	2.4 - 2.1
Melamines	2.0 - 1.43
Silicones (Molded)	2.0 - 1.6
Epoxies (Molded)	1.85
Diallyl Phthalate (G1)	1.59 - 1.55 (1.63)
Polysulfone 40% GF	1.55
PVC	1.55 - 1.16
Nylon Type 6/6 40% GF	1.52
Nylon, Glass Filled	1.51 - 1.30
Polycarbonate 40% GF	1.51
Acetal 20% GF	1.53
Polycarbonate	1.51 - 1.20
Styrene Acylonitrile (S. A. N) 33% GF	1.46
Polyesters (Cast)	1.46 - 1.06
Acetal	1.43
ABS Resin 40% GF	1.38
Polysulfhide Rubber	1.35
Polyphenylene Oxide (PPO) 30% GF	1.27
Neoprene Rubber	1.25 - 1.20
Silicone, Urethane Rub.	1.25
Phenolics (Molded)	1.24 - 3.0
Nylon 6, 11, 66 & 610	1.14 - 1.09
ABS Resins	1.07 - 1.01
Water - Sea Water	1.02 - 1.03
Water	1.0
Water, Ice	0.88 - 0.92
Polyethylene (AD)	0.96 - 0.94
Polyethylene (MD)	0.94 - 0.93
Natural Rubber	0.93
Polypropylene	0.91 - 0.90
Butyl Rubber	0.90

Table 3-4. (Cont'd)

SUBSTANCE	SPECIFIC GRAVITY
American Hardwoods	0.7 - 0.4
American Softwoods	0.5 - 0.4

The specific gravity of a solid or liquid is the ratio of the mass of the body to the mass of an equal volume of water at some standard temperature.

To obtain density in lb/cubic inch, multiply by 0.0361. To obtain lb/cubic foot, multiply by 62.43 (from reference 10).

Table 3-5. Electrical Resistivity of Metals

MATERIAL	ELECTRICAL RESISTIVITY (MICRO OHM - CM) High	Low
Silver	1.59	
Copper	2.03	
Gold	2.35	
Commercial Bronze - 90% Annealed	3.90	
Red Brass - 85% Annealed	4.70	
Rhodium	4.51	
Beryllium	5.00	
Molybdenum	5.17	
Low Brass - 80% Annealed	5.40	
Tungsten	5.48	
Beryllium Copper	5.82	4.82
Zinc	6.06	
Cartridge Brass - 70% Annealed	6.20	
Aluminum and its Alloys	6.30	2.80
Yellow Brass, Annealed	6.40	
Leaded Brasses	6.60	4.10
Palladium	10.80	
Free Cutting Steels	14.30	
Platinum	14.90	
Phosphor Bronze	16.00	3.60
Magnesium Allows	17.00	5.00
Carbon Steels	19.00	14.30
Cupro-nickel	37.00	15.00
Ferritic Stainless	72.00	40.00
Martensitic Stainless	67.00	60.00
Austenitic Stainless	78.00	69.00
Titanium and Alloys	176.00	90.00

(from reference 10)

Table 3-6. Specific Stiffness of Metals

Specific Stiffness E/P 10^6 In. or Stiffness - Weight ratios are obtained by dividing modulus of elasticity in tension (psi) by density (1 lb./cu in.)

MATERIAL	Ratio	YIELD STRENGTH High	YIELD STRENGTH Low	TENSILE STRENGTH High	TENSILE STRENGTH Low
Beryllium	657	55	45	90	60
Molybdenum and Alloys	127	105	82	125	95
Titanium and Alloys	111	150	40	240	145
Carbon Steels	106	188	58	237	75
Aluminum and Alloys	105	26	8	60	22
Ferritic Stainless	104	80	45	85	65
Martensitic Stainless	104	105	25	125	65
Free Cutting Steels	102	100	60	110	70
Magnesium Alloys	102	44	19	54	--
Austenitic Stainless	100	55	30	115	80
Rhodium	94	--	--	300	73
Tungsten	84	220	--	220	--
Cupro-Nickles	68	73	--	60	44
Beryllium Copper	64	35	25	80	60
Red Brass 85%	54	10	--	70	--
Common Bronze 90%	54	10	--	61	--
Leaded Brass	53	20	17	80	55
Phosphor Bronze	53	28	14	130	65
Copper	53	10	--	35	32
Low Brass 80%	51	12	--	74	--
Yellow Brass	49	14	--	46	--
Palladium	39	5	--	28	20
Platinum	27	5.5	--	30	28
Gold	17	30	--	19	--

(from reference 10)

Table 3-7. Pin Contact Design Information

CONTACT SIZE	PIN DIAMETER (Inches ± .001)	STRANDED WIRE SIZES ACCOMMODATED IN CRIMP BARREL
4/0	.500	4/0 - 2/0
1/0	.357	1/0 - 2
2	.283	2 - 4
4	.225	4 - 6
6	.178	6 - 8
8	.142	8 - 10
10	.125	10 - 12
12	.094	12 - 14
16	.0625	16 - 20
20	.040	20 - 24
22	.030 ± .0005	22 - 24
23	.027 ± .0005	22 - 24
*24	.025 ± .0005	24 - 26
*26	.020 ± .0005	26 - 28
*28	.015 ± .0005	28 - 30

*EIA Recommendations in STDS Proposal No. 1017

The primary requisite for the selection of a connection in this design is good conductivity and mechanical strength. The mechanical aspects of the joint are critical, since the connection is subjected to mechanical stresses during actual service conditions.

Soldering is the most widely used method for making electrical connections. Soldered connections, however, have been vigorously attacked by electronic firms in the past fifteen years as unreliable. In missile components, with thousands of electrical connections, 100 percent reliability is required for perfect missile functioning. All electronic component manufacturers are agreed that the reliability of a soldered joint depends on the man who makes the joint. If he follows accepted soldering procedures then a good joint will result.

In the past decade, crimped electrical connections have come into general use. In this design, a contact is percisely crimped to a conductor with a special crimping tool; each connection can be made the same way each time (reference 12). For these reasons the use of crimp joint connections is recommended in this design.

Cable shields should be terminated with inner and outer military standard crimp rings with pigtails terminated at the contacts. This standard system has proved most adequate over the years in all cable connector environments. Also, the Raychem Corp. solder sleeves are considered acceptable for terminating cable shields.

3.4.9 FASTENING - PLUG TO RECEPTACLE -- Of the coupling mechanisms to be considered for fastening the plug to the receptacle, the two most used in the connector industry for cylindrical connectors are threaded and bayonet-type coupling rings (references 13, 14 and 15). Other types used with rack and panel type connectors do not apply here. Due to plug-to-receptacle sealing considerations, the threaded coupling ring offers the most positive fastening and sealing mechanism for underwater use. A tool, however, is required to ensure proper mating of the plug and receptacle and to prevent loosening under vibration and impact shock conditions. This coupling mechanism has proven satisfactory in past years as very few underwater dry connector matings are made during the life of an assembly. Bayonet-type coupling rings are normally best used in quick disconnect applications, such as are required with laboratory test equipment where many matings are required during the life of the components.

Consideration should be given to the use of stub Acme and the standard V thread design for threaded coupling rings. The coupling ring material is chosen for its corrosion resistance, weight, and galling and seizing properties. A hook or pin type spanner wrench should be used to operate the coupling ring. The coupling ring for the pressure proof lightweight connectors should be fabricated from titanium.

3.4.10 SEALING - PLUG TO RECEPTACLE -- Water leakage paths at the plug and receptacle interface should be sealed with two automatic squeeze-type gasket O-rings. This type of seal has proved most adequate in past years. Redundant flange and radial gaskets are used as a safety measure should one gasket be inadvertently omitted or damaged by installing personnel. This

metal-to-metal O-ring seal has proved to be one of the least troublesome design elements in the underwater connector developments of the past fifteen years (reference 16). Standard O-ring compounds of BUNA N satisfy the environment very well and have proven adequate over a ten-year span. Figure 3-15 depicts recommended O-ring dovetail groove dimensions for plug-to-receptacle primary seals.

3.4.11 INSULATION AND SEAL - PIN CONTACT -- Pin contacts which are normally part of the fixed receptacle in underwater applications, are generally sealed in ceramics, elastomers, glass, and plastics. The insulation serves both as a dielectric and a seal to resist the forces of hydrostatic pressure which may be transmitted through the plug and cable assembly. More important, should the cable or plug become damaged, the conductor seal must prevent the full water pressure from penetrating further into the system (component or pressure hull). While glass, ceramic, and silicoceramic pin insulations will be used for high pressure applications, combinations of plastics (epoxies) and elastomers can be used for low pressure applications. In order to take advantage of the outstanding sealing characteristics of glass, ceramics, and silicoceramic materials, high pressure plugs should also use this sealing principle. It is expected that these materials will be able to: first, protect the cable harness should the plug-to-receptacle seals fail, and secondly, protect the receptacle should the harness cable be damaged. As stated earlier, it is recommended that the high pressure connector pin contacts should be double ended pins and will require a socket contact at each end. The low pressure pin contacts would have crimping pots at the back end.

For the underwater electrical connector designs being considered, of primary concern is the sealing and insulating of the electrical contacts within the receptacle or plug shells. This applies particularly to the hermetic seals. A conductive path must be provided through the pin contacts without existence of electrical leakage paths through or across the surface of the insulating material. Connectors must be electrically sound when delivered by the connector manufacturer, they must stand the rigors of storage, installation within components, shipboard installation at the shipyard, and during their life, be maintainable. The USN has found in the past ten years that compression glass sealing contacts is one of the most effective sealing methods available.

This method was developed to provide the most positive sealing technique available. See reference 17 through 26 for information on glass sealing. Glass sealing has been classified as a Grade A seal in accordance with MIL-S-8484 (USAF) (reference 27). A Grade A seal is defined as, one which is accomplished by fusion of metal with ceramic materials, including also the fusion of metals by welding, brazing or soldering; the fusion of ceramic materials using heat or pressure, and the fusion of ceramic materials into a metallic support. The use of compression seals between metal and glass falls within the Grade A classification. Under the development mentioned above, the use of compression glass sealing techniques has resulted in the issuance of three underwater connector military specifications (MIL-C-22539, MIL-C-22249 and MIL-C-24217).

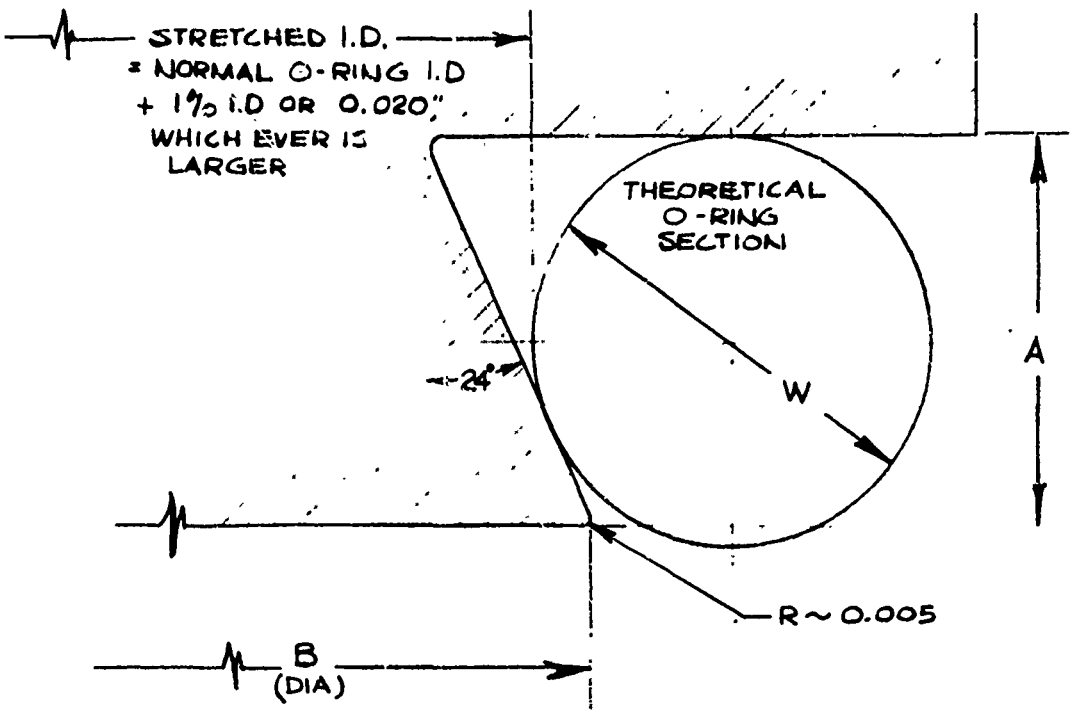

NOMINAL O-RING SECTION	ACTUAL O-RING SECTION, W	A ±.002	B (DIA.)
3/32	0.103 ±.003	0.075	STRETCHED I.D.+ .004
1/8	0.139 ±.004	0.110	STRETCHED I.D.+ .014
3/16	0.210 ±.005	0.180	STRETCHED I.D.+ .043
1/4	0.275 ±.006	0.250	STRETCHED I.D.+ .066

Figure 3-15. Recommended O-Ring Dovetail Groove Dimensions

The hermetic seal between the pin contact and the web section within a receptacle must produce a receptacle capable of being pressure tested up to one and one-half times the connector operating depth. The glass insulating seal material around the receptacle pin contacts should be designed on the basis that the length of the electrical creep path across the surface of the glass will withstand 35 volts per mil. at the following conditions:

a. Room temperature
b. At sea level
c. Relative humidity of 50 percent

Costs are greater than those incurred in the manufacture of plastic connector or molded elastomer connectors. Glass beads must be held to a minimum outside diameter to provide a compact pin layout to yield a compact connector envelope. Another problem encountered when using hermetically sealed contacts occurs during the firing process in manufacture; namely, obtaining a void free bead, crack free, and uncontaminated surface of the glass insulation.

To obtain good quality glass insulation, the manufacturing process has to be rigorously controlled and requires a greater technical ability. Glass defects will cause low insulation resistance, the connector to break down electrically at a low voltage, and cleaning difficulty because of entrapped moisture or dirt within the glass cracks or voids. For a hermetic connector to be completely effective, the glass sealing surfaces must be readily cleanable following exposure to water. These defects have been classified as major (MIL-C-24217) and therefore cannot be tolerated.

Another difficulty encountered is the loss of float in hermetically sealed receptacles, that is, the built-in ability of an electrical contact to move slightly within its insulator, thus adjusting itself to any small amount of contact misalignment.

During the assembly process of the plug and receptacle, float will take care of a small alignment problem. Fixturing receptacle shells, pin contacts, and glass beads during the firing process has to be done to very close tolerances to overcome the loss of contact float.

3.4.12 INSULATION AND SEAL - SOCKET CONTACT -- The socket contact insulation and seal is normally located in the plug. The insulator should seal the contact to the plug body and provide proper electrical insulation. Also, the insulation should provide rigid support for the contacts to withstand the high hydrostatic forces. Candidate materials for this component include glasses, ceramics, plastics, and elastomers. To protect the cable harness, it is desirable to seal the socket contacts and insulator to the plug to prevent water flow into the plug internals should the plug be inadvertently disconnected in water. With this protection and proper cleaning, the harness assembly can be used again.

The selection of insulating materials for electrical connectors should be based on an appraisal of the electrical, mechanical, thermal and chemical requirements of a particular application in relation to the properties of potential candidate materials.

In this selection process, fabrication characteristics, including tooling, required tolerances, production rate, and material cost must also be considered.

Electrical properties important in a particular insulator application include:

a. Dielectric strength
b. Insulation resistance
c. Dielectric constant
d. Dissipation factor
e. Arc resistance
f. Tracking resistance
g. Corona resistance

Mechanical properties include:

a. Tensile strength and ultimate elongation
b. Flexural strength and modulus
c. Compressive strength
d. Shear strength
e. Impact strength
f. Hardness
g. Dimensional stability/linear shrinkage

Thermal properties that are important include:

a. Coefficient of thermal expansion, relative to dimensional stability
b. Heat aging resistance - affecting dimensional stability and other properties
c. Short term temperature resistance
d. Heat deflection temperature
e. Thermal shock resistance
f. Flammability

Chemical properties of importance include:

a. Moisture/water resistance, absorption
b. Resistance to cleaning solvents
c. Ozone resistance
d. Sunlight/weather resistance

All insulating materials have specific desirable characteristics and other properties that are less than optimum. The selection of an insulating material represents a compromise or balancing of desired properties with property limitations.

Dielectric strength is the material property of greatest concern in considering insulating materials. This breakdown occurs when the applied electrical stress exceeds the dielectric strength of the insulating material. "When a solid dielectric has been punctured, the insulation is weakened and

continued leakage (as a direct short circuit) results in a complete breakdown. The capability of withstanding voltage impingment is one of the most important electrical properties in a plastic part" (reference 28).

This property is evaluated by withstanding a voltage test. A specimen is subjected to ac voltage increased at a controlled rate. The major material variables affecting dielectric strength results are: thickness, area, directionability, time, temperature, humidity, frequency (reference 28).

Insulation resistance might better be defined as electrical resistance. It is the combined effect of surface resistivity and volume resistivy. "Surface resistivity is extremely sensitive to variations in surface moisture content and, therefore, to changes in relative humidity. Volume resistivity in most plastics is very high at room conditions and requires long-time exposures at elevated humidity to reach equilibrium values (reference 28).

Dielectric constant (or permittivity) of a plastic is the relative ratio of the ability of a given volume of dielectric material between two conductors to store electrostatic energy compared to an equal volume of air as the dielectric. This is very critical in high radio frequency applications.

"The dissipation factor (or loss tangent) of a plastic is the ratio of the parallel reactance to the parallel resistance, or the tangent of the loss angle. When actual values are small, the dissipation factor (tangent) is practically equal to the power factor (sine) which is the ratio of the power in watts dissipated in the capacitor formed by the plastic dielectric to the effective volt-amperes. In most all electrical applications, it is desirable to name a low value of dissipation factor in order to minimize the conversion to heat energy and to reduce the effect of power loss on the network. Many microwave and radar applications require that the dissipation factor be held to extremely low values so that the signals or transmissions are not distorted by the dielectric. In coaxial cables, the dissipation factor is useful in estimating the contribution of dielectric losses to the total attenuation" (reference 28).

"The loss factor of a plastic is the product of the dielectric constant and the dissipation factor, and is proportional to the energy loss in the dielectric. In practically every insulating application, a low value of loss factor is desirable in order to reduce the heating of the material and to minimize the effect on the rest of the network. This is particularly important at high frequencies because, with a given loss factor, the power loss increases directly with frequency" (reference 28).

Arc resistance refers to the characteristic of insulating materials to resist carbonization (usually called tracking) of the material surface between electrodes due to voltage breakdown.

Track resistance measures the ability of the solid insulating material to withstand the action of arcs produced by conduction through the surface films of a specified contaminant containing moisture. Charging of the insulation during arc-over has a degrading and accumulative effect. Flash-over is an electrical breakdown of an insulating material such as air surrounding two insulated parts.

Corona relates to the ionization of air surrounding a conductor and is caused by the influence of high voltage. (See reference 29.)

The desired physical properties of insulators as noted earlier are straightforward and do not require much explanation. In past years, the compressive strength, impact strength and dimensional stability of the socket contact insulators have been of great importance. The design of the MIL-C-24217 connector required insulator materials with these properties because the plastic acts as a load bearing member when the plug is subjected to hydrostatic pressure. Materials such as delrin, polycarbonate, epoxy, melamine, and diallyl phthalate were evaluated. Glass-filled diallyl phthalate was the only candidate material which fully met the physical requirements. Reference 30 should also be referred to for electronic materials selection considerations.

The following listing was compiled by a major insurance company. They noted that approximately 85 percent of electrical apparatus failures were due to insulation failures.

Major Cause of Insulation Failure in Service (reference 29).

a. Unusual surge voltages.
b. Faulty design with insufficient margin or use of unsuitable materials.
c. Mechanical damage due to improper handling or introduction of foreign matter.
d. Contamination on the accumulation of dirt, oil, moisture or the chemical due to faulty maintenance or improper operating conditions.
e. Moisture absorption which reduces insulation resistance and dielectric strength levels.
f. Thermal aging as a result of excessive operating temperatures which render the insulation vulnerable to many causes of failure.
g. Corona deterioration at points of high voltage stress.

As the glass sealed pin contact header section in the plug shell supports the hydrostatic pressure loading, the socket contact insulator and seal in the front face of the plug is not considered a critical material selection problem. A compression molded silicone rubber compound is recommended at the rear of the plug shell as the material must insulate and support the conductors in this area. Table 3-8 offers property values for the insulator materials considered in this study.

3.4.13 SEAL-CABLE TO PLUG -- The major design consideration in this seal is to provide a watertight joint between a rigid non-elastic material (the plug) and an elastomeric material (the cable). See figure 3-16. A hermetically sealed connector is useless if water leaks between the cable and plug.

The automatic squeeze gaskets, such as the O-ring and Quad ring, are used universally to seal spaces between two rigid nonelastic surfaces. These gaskets have also been used with some success for sealing the relatively rigid coaxial cables to metal, but are not at all practical with flexible electrical cables. The seal concept is based initially on sealing the gasket material at installation; hydrostatic pressure then helps to increase the effectiveness of the seal. However, the relative flexibility of the cable prohibits the use of automatic squeeze gaskets. The initial pressure on the

TEST METHOD PROPERTIES MATERIAL	D-638 TENSILE STRENGTH lb/in^2	D-695 COMPRESSIVE STRENGTH lb/in^2	D-790 FLEXURAL STRENGTH lb/in^2	D-256 120 D NOTCHED IMPACT STRENGTH ft/lb/in
Diallyl Phthalate (Glass-Filled)	7,000 9,500	29,000 28,500	17,000 19,000	4.0/6.0 9.0
Polycarbonate	9,000	11,000	12,000	14
Polycarbonate 40% Glass Filled	18,000*	18,500*	26,000	5
Nylon 6/6	11,200	15,000	14,600	1.75
Nylon 6/6 Glass Filled	19,290	16,000	22,000	2.5
Acetal	10,000	5,200	14,100	1.4/2.3
Chlorotrifluoroethylene	4,600/5,700	2,000	3,500	3.5
PVC, High - Impact	7,000	-	12,000	1.5
Polypropylene	5,000	8,500	6,000/8,000	0.6/2.5
Fluorocarbon - FEP	5,000	2,200	7,800/10,700	3.1/7.3
Fluorcarbon - TFE	500/4,000	1,700	No Break	1.0
ABS, High - Impact	5,100	7,000	8,000	2.4
Phenolic - Glass (Molding)	9,900	-	26,000	24
Melamine - Glass Reinf (Molding)	5,800	20,000/25,000	16,000/24,000	4/6.0
Epoxy - Reinforced	5,000/16,000	25,000/26,000	9,000/30,000	0.3/30.0
Acrylic	10,000	12,000	5,000	0.3
	Using Tubing Data			
Melamine, Glass Fabric	23,000	22,000	-	11
Melamine, Glass Fabric	30,000	22,000	30,000	9
Melamine, Cotton Fabric	10,600	20,000	-	0.75
Epoxy, Glass Fabric	40,000	22,000		10
Epoxy, Glass Fabric(H.T.)	38,000	40,000	(1/2-inch dia.) 55,000	10
Polyphenylene Oxide	10,500		15,000	1/8-inch bar 2.6
Polysulfone	10,200	15,400	15,400	1/2-inch bar 1.3
Polyurethane	4,500/8,000	20,000	700/1,000	1/2-inch bar No Break
Silicone	850/925	-	-	No Break

Z-Average Minimum
*Maximum Working Stress; Intermittent Stress at Room Temp; Tension = 4000, Comp

NOTES:

Melamine - Exceptional Dielectric Strength Under Moisture Conditions; More Stable
Epoxy --- Has Lower Water Absorption, Better Insulation Resistance, Lower Loss
Mechanical Properties, Slightly Better Machinability & Higher Cost
Thermosetting Laminates Are Tough and Don't Creep Within Wider Range
The Yield Strength Is The Ultimate Strength (There Is No Plastic Flow)

D-790 FLEXURAL STRENGTH lb/in^2	D-256 120 D NOTCHED IMPACT STRENGTH ft/lb/in	D-648 @264 PSI LOAD HEAT DISTORTION F.	CONTINUOUS HEAT RESISTANCE F.	MOLD SHRINKAGE in/in	D-635 FLAMMABILITY in/min	D-570 @ 73°F MOISTURE ABSORPTION % in 24 hr.	D-621 122°F/2000 PSI COMPRESSION SET UNDER LOAD %	
17,000	4.0/6.0	400	400/450	.001-.004	Self Extinguish	0.09	NIL	4
19,000	9.0	490	450/500	.002	100	0.11	NIL	3
12,000	14	275	250	.005	Self Extinguish	0.35	0.009	3
26,000	5	300		.0009	Self Extinguish	0.14		2
14,600	1.75	200	250	.007-.015	Self Extinguish	1.5	1.4	3
22,000	2.5	498	250		Self Extinguish	0.7	0.3	4
14,100	1.4/2.3	255	185		1.1	0.20	0.5	3
3,500	3.5	155	390	.010-.015	NIL	NIL		2
12,000	1.5	160			Self Extinguish	-	-	3
,000/8,000	0.6/2.5	140	250		1.0	Less Than 0.01	3.1	2
800/10,700	3.1/7.3	167	390	.03	None	0.01	0.40	2
No Break	1.0	120	500	.002-.006	None	0.05	-	2
8,000	2.4	185	-	.001-.010	1.3	0.28	1.38	4
26,000	24	-		.001-.0012			0.35	
000/24,000	4/6.0	400	300	.002-.003	Self Extinguish	0.1	-	9
000/30,000	0.3/30.0	210-500	300	.001-.015	Will Burn	0.6	-	5
5,000	0.3	202	190	.002-.006	1.2	0.3	1.4	3
-	11					1"x3"x1/8" 0.7		7
30,000	9					2.0		7
-	0.75					0.9		7
	10					0.1		5
1/2-inch dia.) 55,000	10					0.15		5
15,000	1/8-inch bar 2.6	375		.007	Self Extinguish	0.06		2
15,400	1/2-inch bar 1.3	345	300	.0076	Self Extinguish	0.22		2
700/1,000	1/2-inch bar No Break		150/180	.008-.012	Slow Burning	.60-.80		6
-	No Break	1% per 10 C	400/500	.2-.6%	-	0.12% by weight		3

n Temp; Tension = 4000, Comp. = 6000 Steady 2000 psi For Min. Creep, Stress Cracking Over Period of Time

oisture Conditions; More Stable Electrical Properties Under Moisture Cond., Excel. Arc Resist.
ation Resistance, Lower Loss Particularly At Power Frequencies, Slightly Better
chinability & Higher Cost
Don't Creep Within Wider Ranges of Stress & Temperature With Laminated Thermosets
th (There Is No Plastic Flow)

D-570 73°F STURE ORPTION in 24 hr.	D-621 122°F/2000 PSI COMPRESSION SET UNDER LOAD %	D-150 DIELECTRIC CONSTANT @ 60 cyc./sec.	SPECIFIC COMPOUND TYPE	REPRESENTATIVE TRADE NAME	AVG. MIN. PRICE ($/lb)
0.09	NIL	4.2	Diall 52-20-30	Diall, Dapon, Durez, Rogers, Alme	1.175
0.11	NIL	3.6 (1 MC)	Diall FS-4		
0.35	0.009	3.2		Lexan, Merlon	1.175
0.14		2.96 (1 MC)	GR	Lexan, Gr	
1.5	1.4	3.6-4.0		Nypel, Chemstrand, Zytel, Catalin	.875
0.7	0.3	4.0	Fiberfil G-1	Fiberfil	
0.20	0.5	3.7		Delrin, Celcon	.65
NIL		2.65		Kel-F, Plaskon	4.70
-	-	3-4		Exon, Geon, Xyran, Bakelite, Opalon	.255
ss Than 0.01	3.1	2.3		Escon, Profax, Tenite, Avisun	.25
0.01	0.40	2.5		Teflon 100X	9.60
0.05	-	2.1		Teflon, Halon	3.25
0.28	1.38	4.2		Lustran, Tybrene, Cycolac, Kralastic	.395
	0.35		Fiberite 4031-2194	Fiberite	
0.1	-	9.7-11.1	Cymel 3135	Cymel	
0.6	-	5.4		Hysol, Fiberite	
0.3	1.4	3.5		Acrylite, Zerlon Lucite, Plexiglas	.455
3"x1/8"					
0.7		7.2 (1 MC)	Nema Grade G-9	Formica FF-60	
2.0		7.8 (1 MC)	Nema Grade G-5	Synthane (GMG)	
0.9		7.1 (1 MC)	Nema Grade MC	Formica CH-41	
0.1		5.0 (1 MC)	Nema Grade G-10	Formica FF-91	
0.15		5.3 (1 MC)	Nema Grade G-11	Formica FF-95	
0.06		2.58 60 cyc (1 MC)		PPO	
0.22		2.82		Bakelite	1.25
.60-.80		6.7-7.5		Texin, Estane, Roylar	1.32
12% by ight		3.6/3.0		RTV silicone 630/ or 615/30	

of Time

3

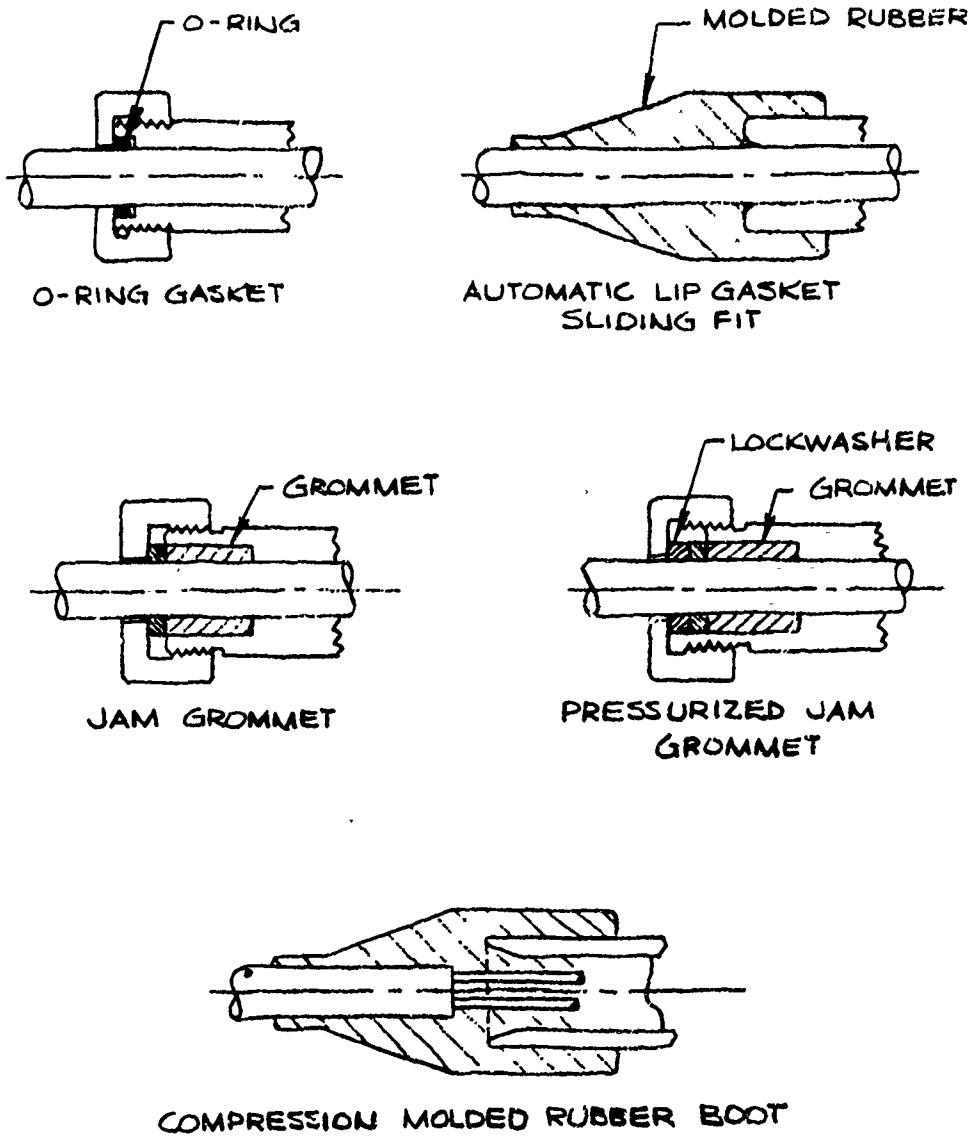

Figure 3-16. Cable-To-Plug Seals

gasket is soon lost by creepage or cold flow of the cable jacket material. When the initial seal is lost, a seal between the two materials is not possible at low pressures (approximately 0-30 psig). The automatic squeeze gasket, then, has limited use here.

The automatic lip seal is the second considered. A cylindrical rubber boot is compression molded to the cable jacket, then the boot is interference fitted to a metal shell to form an initial pressure seal. The external hydrostatic pressures only increase the seal effectiveness. This design has been used by several manufacturers for underwater connections but this seal is not considered to be the best. Because the rubber is tensioned over a metal sleeve, it can relax over a period of time and lose the initial seal. In view of this possibility, a more effective, reliable and permanent seal is necessary.

The jam and floating seals are made by slipping a rubber grommet over a cable, placing the cable and grommet in a stuffing tube, and pressurizing the grommet in a gland nut. The floating gasket has a spring (lockwasher) to assure constant pressure on the grommet (packing). The jam seal is not seriously considered since it has been superseded by the floating packing seal for flexible cable applications. The jam seal requires intermittent grommet pressurization to maintain a seal due to cold flow of the cable jacket and grommet material relaxing over extended periods.

The floating packing design is an outgrowth of the jam seal. A spring is placed in the stuffing gland for constant pressure on the packing over extended periods despite cable material cold flow. The design has found wide acceptance for sealing submarine cables since World War II; however, the seal is not entirely reliable. Submarines have experienced seal failures. In view of this fact, and more stringent high hydrostatic pressure design requirements, this seal is unsuitable for outboard submarine applications and was not further pursued.

Past experience has shown that this seal can best be accomplished with the use of an elastomeric material such as polyurethane or neoprene properly bonded to the cable and plug body. The selection of the best elastomeric material to suit the application, giving consideration to resistance to the sea water environment, bondability to cable jackets and materials, and molding methods which best suit the application is most important. The material and adhesive finally selected must include the following property considerations:

a. Strength and toughness
b. Elasticity and resilience
c. Bonding potential
d. Environmental stability
e. Insulation resistance
f. Application methods
g. Water permeability
h. Material plastic flow
i. Fatigue life
j. Compression set
k. Water absorption

The recommended cable-to-plug seal design is discussed in further detail in section 4 of this Handbook. Specific material selection is discussed in that section.

3.4.14 CABLE STRAIN RELIEF -- Cable strain relief is often the least considered design element in the development of a cable seal assembly. This feature should be incorporated, however, in any cable seal to provide a gripping area to prevent the cable from exerting an axial force on the cable seal when subjected to hydrostatic pressures. For instance, where slip-on-grommet cable seal packings are used a cable strain relief clamp should be provided on the front face of the gland nut. The grommet should seal the cables but should not be required to prevent cable movement.

The strain relief should also prevent an axial force from being applied to the individual conductors in handling the plug-cable harness. The most common cable strain relief methods are as follows:

a. Clamping (the best examples of which are the cable clamps used with AN type plugs),
b. A pressurized grommet that is also a moisture seal,
c. Molded rubber boots, and
d. Kellems Company cable grip (figure 3-17).

For the connector design recommended, the cable strain relief is incorporated in the external cable seal in the form of the molded rubber boot seal and the clamp at the rear of the prepotting back shell (figure 3-18).

3.4.15 PLUG ADAPTER FOR CABLE PROTECTION -- At the back end of the plug boot a cylindrical molded rubber section can be provided for installation of flexible corrugated tubing. The tubing can serve as cable protection against physical damage, provide shielding protection against external electrical interference, or it can act as the external member to house conductors in a free flooding installation. Figure 3-19 shows a typical installation.

3.4.16 CONNECTOR ACCESSORIES

3.4.16.1 PRESSURE PROOF COVERS -- Pressure proof plug and receptacle covers (or caps) are necessary accessories for DSV connectors. The covers provide a watertight envelope at the mating faces of the plugs and receptacles when they are not normally mated to their counterpart connectors either in service or during test programs. The pressure proof covers should be designed to withstand one and one-half times the operating depth pressures of the connector. The basic design of these components is straightforward as seen in figure 3-20. For the designs recommended in this Handbook, the plug and receptacle cover material should be titanium.

The plug cover is essentially a one piece body which houses a radial O-ring seal with accompanying backup washers. Spanner wrench pin holes are drilled into the body to facilitate coupling. The receptacle cover is basically a two-piece assembly. The body is similar to the plug shell without the socket contacts. The standard plug coupling ring is used to make the cover to the receptacle. The receptacle shell houses the O-ring gasket in a dovetail groove.

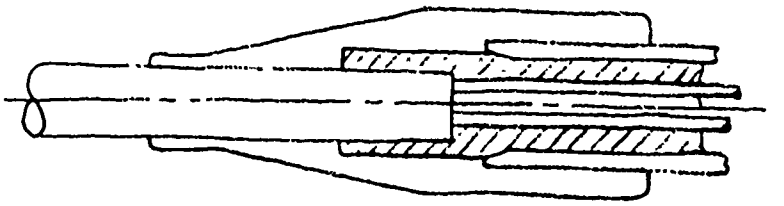

COMPRESSION MOLDED BOOT

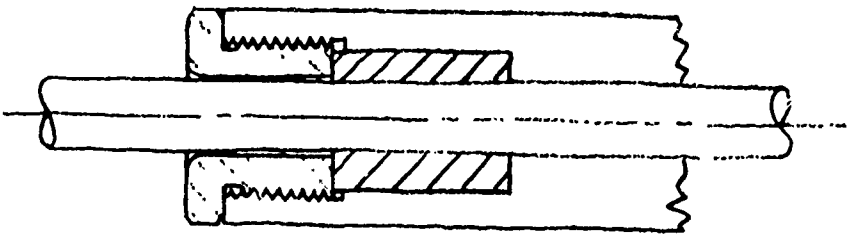

PRESSURIZED GROMMET

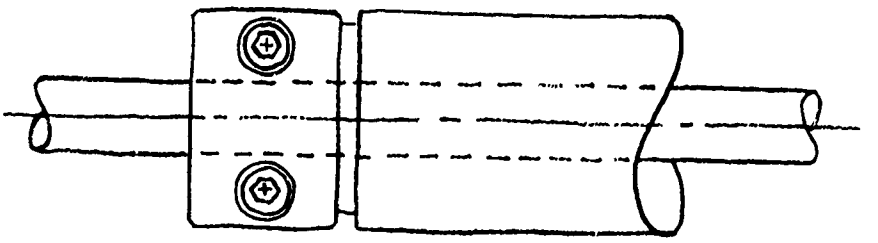

CABLE CLAMP

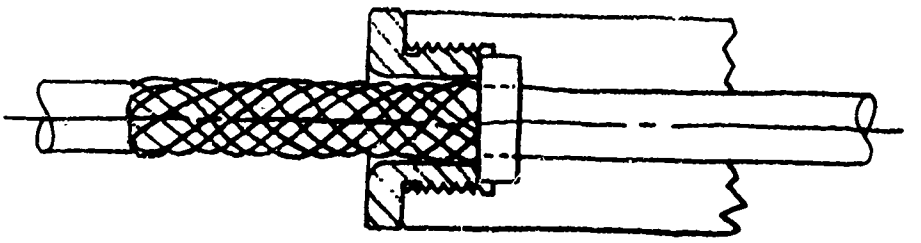

KELLEM'S COMPANY CABLE GRIP

Figure 3-17. Methods Used For Cable Strain Relief

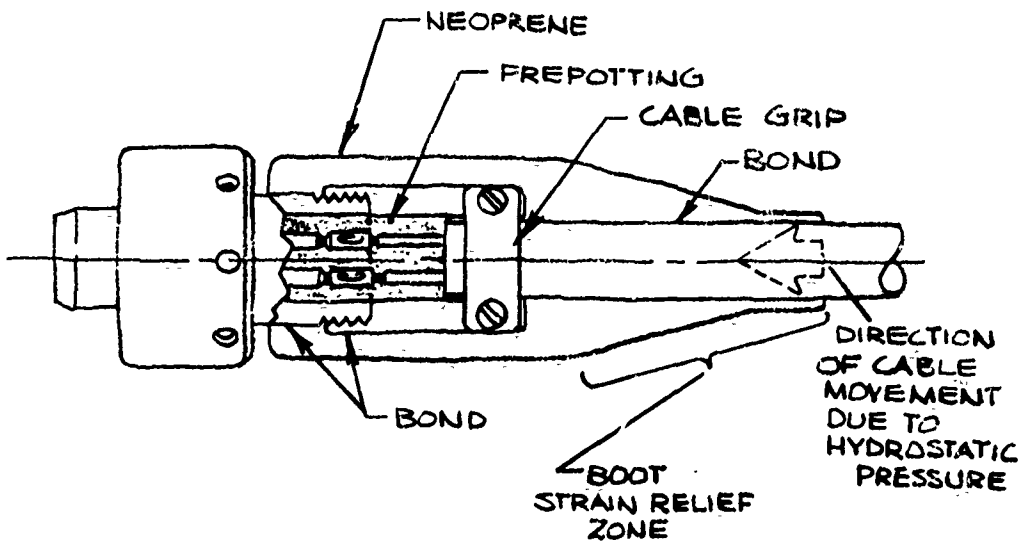

Figure 3-18. Components Of The Cable-To-Plug Strain Relief And Seal

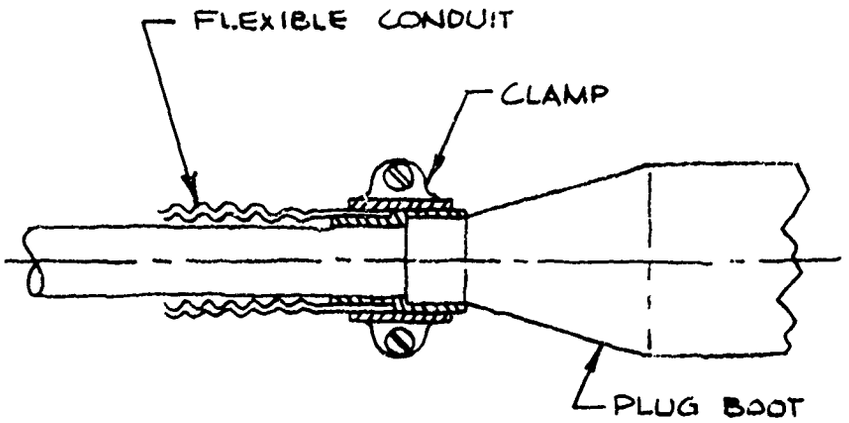

MECHANICAL PROTECTION

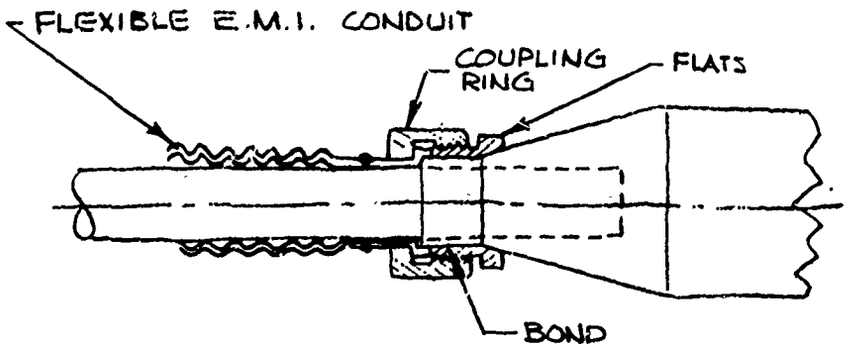

ELECTRO-MAGNETIC INTERFERENCE PROTECTION

Figure 3-19. Cable Protection Or EMI Shielding Device

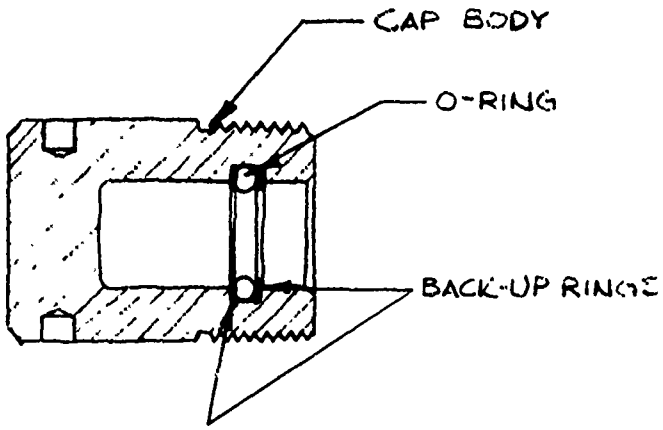

PRESSURE PROOF PLUG CAP

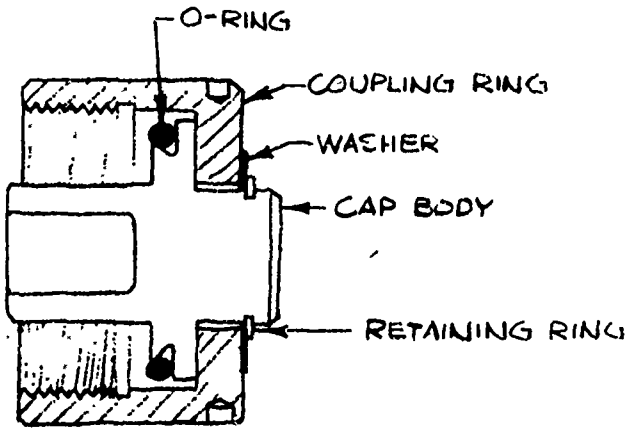

PRESSURE PROOF RECEPTACLE CAP

Figure 3-20. Pressure Proof Connector Covers

3.4.16.2 PROTECTIVE COVERS -- Each fabricated plug and receptacle should be fitted with protective covers on the front and rear faces. These covers protect the mating and sealing surfaces as well as the contacts located within the plug and receptacle shell. These protective caps also keep foreign matter from entering the cavities of the plug and receptacles. The protective covers (caps) can be fabricated from any reasonably high impact plastic such as polycarbonate, nylon, ABS, and delrin among others; or from a metallic material such as aluminum. Covers of this type are absolutely essential to assure the quality of the connectors throughout the manufacturing, test, shipping, and installation cycle.

3.5 SUMMARY

This section has reviewed the various basic types of available connectors. Design parameters for a proper connector have been listed. Recommendations have been made for connector designs to suit the various ocean depths classes. Finally, the design factors which must be considered in any connector design have been discussed in detail. Quality control considerations as well as connector design calculations, Failure Modes and Effects Analysis, and test requirements are noted in section 6.

Section 3

REFERENCES

1. Peterson, R. E. "Fluid Leakage Seal For Electric Cables", Patent No. 3,055,972.

2. Haworth, R. F. and J. E. Regan. "Watertight Electrical Connectors For Undersea Vehicles and Components", ASME Paper [illegible] 64 [illegible]A/UNT-10, ASME Conference of November 29 to December 4, 1964.

3. Haworth, R. F. and J. E. Redding. Pressure Proof Hull Fitting For DSS-3 Type Cables On AN/BQQ-1 Sonar Array, SSN597, Electric Boat Division Report No. P59-134, (Contract Nobs 77007), 23 October, 1959.

4. Nelson, A. L. "Deep Sea Electrical Connectors and Feedthrough Insulators For Packaging Electronics", Material Electronic Packaging and Production Conference, Long Beach, California, June 9, 1965.

5. Haigh, K. R. "Deep-Sea Cable Gland System For Underwater Vehicles and Oceanographic Equipment", Proceedings, IEE, Vol 115, No. 1, January 1968.

6. Behr, S. et al. Handbook of Electric Cable Technology For Deep Ocean Applications, U.S. Naval Ship Research and Development Laboratory, Annapolis, Md., November 1970.

7. Wolski, B. NR-1 Special Test for Electrical Hull Fittings, Junction Boxes and Associated Cable Assemblies, Electric Boat Division Report No. 418-68-010, Two Volumes, October 22, 1968.

8. Wolski, B. NR-1 Special Test for Outboard Electrical Plug/Cable Assemblies and Junction Boxes, Electric Boat Report No. 418-69-002, Two Volumes.

9. Anon. Propertities of TI-6AL-4V, Titanium Corp. of America, West Caldwell, N.J.

10. "Materials Selector 1971", Materials Engineering, Reinhold Publishing Corp., Vol. 72, No. 6, 1970.

11. Glowasky, A. Investigation of Platings of Electrical Contacts, U.S. Naval Applied Science Laboratory, Brooklyn, New York, Lab. Project IED-20, Final Report.

12. Anderson, J. D. Crimping Manual for the Electronic Industry, Burndy Corp., Norwalk, Conn., 1965.

13. Lawrence. R. Electrical/Electronic Interconnection and Connector Techniques, Deutsh Electronic Component Division, Banning, Calif.

14. Lenk, J. D. and H. B. Sams. Applications Handbook for Electrical Connectors, Com. Inc., Indianapolis, Indiana, July 1966.

15. Harper, C. A. Handbook of Electronic Packaging, McGraw-Hill Book.

16. Bridgman, P. E. The Physics of High Pressure, McMillan Co., N.Y., N.Y., 1931.

17. Forster, G. A. Hermetic Sealing Terminals, WADC Technical Report 56-251, AD107274, April 1956.

REFERENCES (Cont'd)

18. Stasch, A. Handbook on Hermetic Sealing, Amphenol Connector Division, Amphenol - Borg Electronics Corp., Report No. 5-4, December 5, 1959.

19. Debbi, H. "How to Make Glass-to-Metal Seals - Part I - Matched Seals", Insulation, June 1968.

20. Debbi, H. "How to Make Glass-to-Metal Seals - Part II, Mismatched Seals", Insulation, July 1968.

21. Dalton, R. H. "How to Design Glass-to-Metal Joints", Product Engineering, April 26, 1965.

22. Comer, J. "Glass-to-Metal Seals", Electrical Manufacturing, March 1958.

23. Brown, W. "Environmental Protection With Hermetic Sealing", Electrical Manufacturing, November 1957.

24. Stasch, A. "The Hermetically Sealed Connector and Its Capabilities", Electronic Industires, May 1964.

25. Anon. "Glass and Ceramic Sealing Alloy Tubing", Electromechanical Design, November 1965.

26. Kutzer, L. G. "Joining Ceramics and Glass to Metals", Material In Design Engineering, January 1965.

27. "Seals and Seal Testing Procedure (for Electronic Enclosures)", MIL-S-8484 (USAF), June 25, 1964.

28. Craig, C. L. "Electrical Properties of Plastics - What They Mean to the Designer", Plastics Design and Processing, February 1962.

29. Moses, G. L. Electrical Insulation - its Application to Shipboard Electrical Equipment, McGraw Hill Book Co., Inc., N.Y., N.Y., 1951.

30. Harper, C. A. Handbook of Materials and Processes For Electronics, McGraw-Hill Book Co., New York, N.Y., 1970.

Section 4

TABLE OF CONTENTS

Section	Title	Page
4.1	Harness Configuration	4-1
4.2	Harness Design Parameters	4-1
4.2.1	Cable Design Considerations	4-5
4.2.2	Connector Design Considerations	4-5
4.2.3	Connector-To-Cable Wiring and Molding Considerations	4-5
4.2.4	Summary	4-13

PRECEDING PAGE BLANK - NOT FILMED

Section 4

LIST OF FIGURES AND TABLES

Figure	Title	Page
4-1	Typical Pressure Proof Harness Assembly	4-2
4-2	DSV Pressure Proof Harness Types	4-3
4-3	Typical Molded Plug Assembly	4-8

Section 4

PRESSURE PROOF ELECTRICAL HARNESS DESIGN

4.1 HARNESS CONFIGURATION

Pressure proof electrical harnesses are another very important design item on DSVs. Failure of a harness assembly naturally means the loss of the system to which the harness is attached. The seriousness of the loss is, however, strictly dependent on the criticality of the system. (The loss of a propulsion motor harness would abort the mission while the loss of a light may not.) When considering penetrators, connectors and harnesses, many failures on the DSVs to date have been attributed to harnesses. The reasons for failure range from improper design, fabrication, misuse in service, and cable damage at installation, during maintenance operations and during vehicle mission.

As discussed here, a pressure proof harness assembly is a cable with connectors wired and sealed to each end. (see figure 4-1) The harness is used outboard of the DSV pressure hull and usually runs from the hull electrical penetrator to an outboard electrical component, or from an outboard distribution box to an electronic component. As seen in figure 4-2 many types of harness assemblies can be considered and have actually been used on submersibles. However, the predominance of harnesses used to date make use of rubber jacketed cables. Metal sheathed mineral insulated cables have been used on a few European DSVs, but most all United States DSV designs have made use of conventional neoprene jacketed cables of the SO or MIL-C-915. A few U.S. fabricators have used oil filled cables.

Concurrent with the Deep Ocean Technology (DOT) electrical connector and penetrator development program, Navships assigned the Naval Ship Research and Development Laboratory (NSRDL) to the task of developing electrical cables to be used in assembling pressure proof harnesses. This work is well documented in the DOT cable Design Handbook published by NSRDL, reference 1. The designs being developed and tested by NSRDL are made up of annealed copper conductors insulated with a plastic such as polypropylene or chemically cross-linked polyethylene. The conductors are twisted together, and the voids in the cable are filled with an elastomeric type filling compound. When shields are used, they are made up of served tinned copper strands providing 85 percent minimum coverage. The cable is sheathed with a neoprene or polyurethane material.

A manual for the fabrication and test of pressure proof electrical harnesses is also being prepared under the DOT program. The manual covers harness fabrication procedures, cable and connector inspection procedures, and test procedures.

4.2 HARNESS DESIGN PARAMETERS

The primary function of a pressure proof harness assembly is to provide an electrical interconnection point from the electrical hull penetrator to the outboard electrical/electronic component.

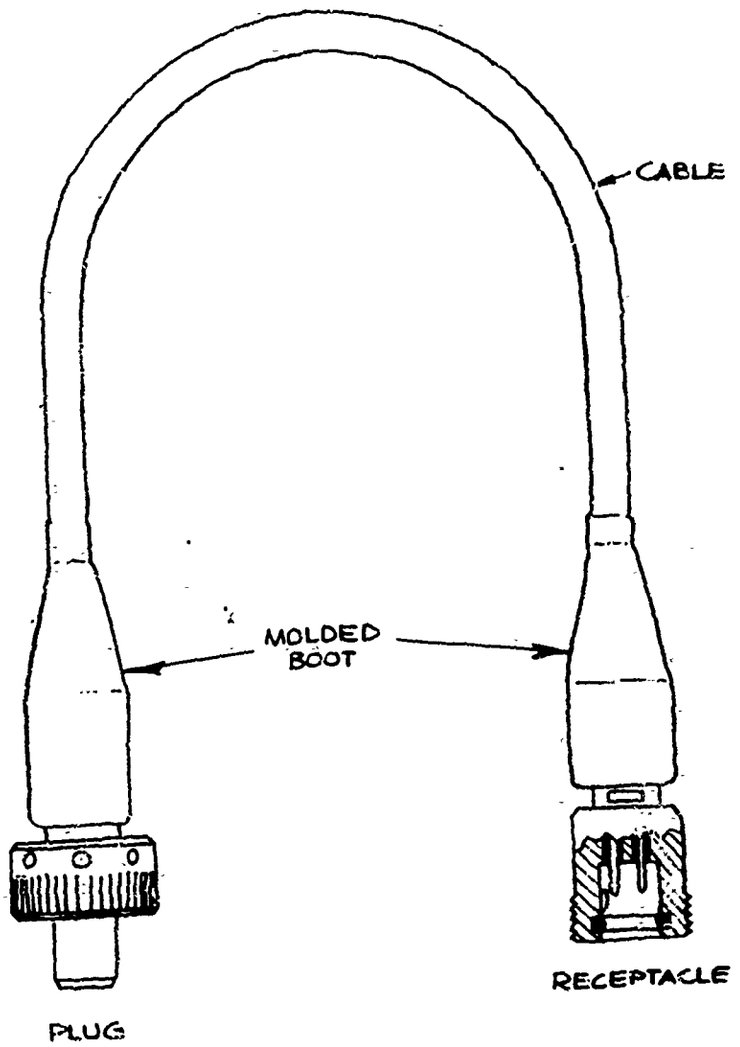

Figure 4-1 Typical Pressure Proof Harness Assembly

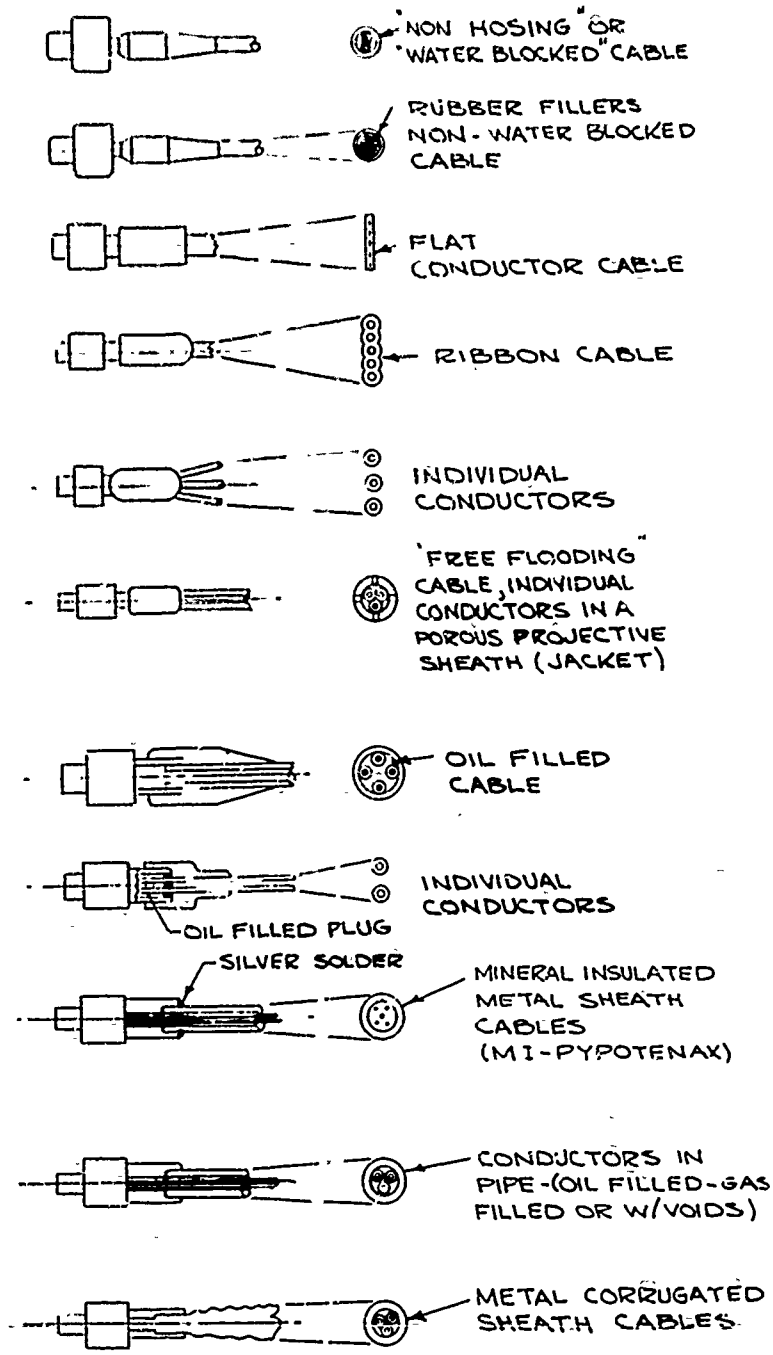

Figure

Figure 4-2 DSV Pressure Proof Harness Types

As seen earlier, many basic designs have been used in the past forty years to satisfy the DSV requirements. The harness configurations used in past years have been primarily based on cable availability due to the short cable lengths and large number of cable types required for each vehicle design. This problem is being solved with the development of various cable types and sizes under the DOT program. These cables along with the connectors under development will provide a well-designed harness assembly. These harness details will be covered in a forthcoming military specification for DSV pressure proof harnesses.

The following design parameters must be considered in developing a watertight harness assembly:

a. Materials of construction must be resistant to corrosion in a sea water environment.
b. Adequate wire or cable strain relief must be provided at the cable-to-connector interface.
c. All wire terminations within the plug or receptacle cavity should be sealed and supported. This combined moisture barrier and strain relief is readily accomplished by potting compounds.
d. The harness assembly must be capable of withstanding a hydrostatic test pressure equal one and one-half times the operating pressure.
e. The harness assembly must be as light weight as practicable.
f. The harness size should be as small as practicable (diameter of the cable, overall size of the connectors).
g. The harness assembly should have a minimum ten year service life.
h. The harness assembly, when mated to the counterpart connectors, should be capable of withstanding 2000 hydrostatic pressure cycles at the specified operating depth.
i. The connector cable boot should have strain relief to withstand repeated flexing and maintain a watertight bond between the cable/boot transition and the watertight bond between the boot/connector shell transition.
j. Harnesses should be capable of withstanding a high impact shock and a vibration test without physical damage, loosening of component parts, or significant discontinuities in the electrical circuits.
k. The harness should be designed to withstand normal abuse encountered in handling, installation, and maintenance.
l. The connector boot should be designed to allow a minimum cable bending radius at the cable/connector exit area.
m. The connector potting compounds and boot materials should be readily available and not require extensive handling and use precautions.
n. The connector boot mold should be a single design and not pose assembly and use problems.
o. Standard military tools should be specified for crimping conductors to contacts.
p. Wire stripping tools should be specified that will not damage the wires being stripped.
q. Every effort should be made to make use of solvents and materials which do not require special safety precautions or cause skin irritation to the technicians using these materials.
r. Wires should be crimped to contacts wherever possible.

s. Wiring, potting, molding, inspection, and test procedures should be as simple and direct as practicable.

t. Adhesives and primers used to secure the connector boot to the cable jacket and connector shell must provide a tenacious bond in a sea water environment for the required ten year service life of the harness.

u. The connector wiring and molding design should be such that the conductors will not be kinked in the wiring operation or under hydrostatic cycling conditions.

v. Connector potting compounds should be specified that have minimum curing shrinkage properties.

4.2.1 CABLE DESIGN CONSIDERATIONS -- When considering cable design, the DOT "Handbook of Electric Cable Technology for Deep Ocean Applications", Reference 1, should be consulted.

4.2.2 CONNECTOR DESIGN CONSIDERATIONS -- Pressureproof electrical connector design considerations are covered in section 3 of this Handbook. Adherence to the design details outlined in this section should lead to a sound connector design and allow the fabrication of quality harness assembly.

4.2.3 CONNECTOR-TO-CABLE WIRING AND MOLDING CONSIDERATIONS -- The following are design considerations for fabricating a pressureproof harness:

a. Preparing the ends of the cable.
b. Connecting the conductors and shield to the contacts.
c. Cleaning and priming the cable jacket.
d. Cleaning and priming the connector shell.
e. Potting the connector internals.
f. Molding the connector/cable boot.
g. Testing the completed harness.
h. Packaging the harness prior to installation.
i. Material selection considerations.
j. Mold design.
k. Molded boot configuration.

This phase of the pressureproof harness design is considered to be the most demanding as it requires the marrying of a connector to a cable. This interface area is critical as the interconnection is subjected to hydrostatic pressures in service, and the assembly of the two components is no better than the technicians care when making up the joint. Two basic functions are accomplished when terminating a harness. The cable conductors are electrically connected to the connector contacts, and the cable is sealed to the connector to assure a watertight joint.

The following are recommended techniques and fabrication procedures for wiring and molding a connector to a cable:

4.2.3.1 WIRING AND MOLDING MANUAL -- A wiring and molding manual should be available to the technician prior to the start of any connector assembly process. References 2 and 3 are examples of such documents. Also, a manual is being prepared by the USN which pertains to the procedures necessary to wire and mold the DOT developed connectors to the DOT developed cables. The technician who wires and molds the harness must be most familiar with the manual he is using and must be qualified to the processes contained in the manual. It is well for the manual to contain technician qualification procedures to assure that the technician is indeed familiar with the process and qualified to execute the techniques required to make up a harness.

4.2.3.2 PREPARING THE CABLE ENDS -- The wiring and molding manual used by the technician must include sketches of proper cutting lengths for each type cable to be terminated. The cable jacket and binder tapes should be removed with a sharp knife or razor bladed tool. Care must be taken not to cut the conductor or shield insulations. Elastomeric cable fillers should be removed at this time. The basic insulation over the connectors should be removed with a thermal stripping tool to prevent nicking the conductor strands. The individual strands of the conductors must be cleaned to remove the strand sealant. Care must be taken to have the conductor and shield lengths prepared as specified on the sketch in the manual so not to impose undue stresses on any one conductor when terminating them to the contacts.

4.2.3.3 CONNECTING THE CONDUCTORS AND SHIELDS TO THE CONTACTS -- As noted in section 3, mechanical crimping methods are recommended where possible to mechanically and electrically connect the contacts to the conductors and shields. The military and industry have found this method to be most reliable in service and more easily quality controlled than other methods used previously. Such methods as wire wrapping are equally reliable but are not suited to these designs as they occupy more space than is available. Conductor crimping tools fabricated in accordance with MIL-T-22520 should be used to crimp signal and control cable wires up to and including 12 AWG. These tools are detailed on Military Specification sheets MS3192, MS3194, and MS3198. The crimping tool locators are detailed on MS3191 and the quality control gages for the tools are detailed on MS3196. A hydraulically operated crimping tool as specified in MIL-T-22909 is used to connect wires larger than size 12 AWG. Reference 4 is an excellent source for general crimping information.

From the techniques described in reference 5, it is seen that inner and outer crimp rings in conjunction with a pigtail lead can be used to terminate shields. Also, a one piece insulated Burndy Corp. UNIRING has been widely used. The Raychem Corp. Solder Sleeve is another termination method which has found wide use recently. One advantage of the solder sleeve is that the design conserves space in back of the connector. Space availability in this area is at a minimum. All three methods are acceptable. Their use is primarily dependent on which one the terminating activity is most comfortable using.

In cases where crimped contacts cannot be used, then the wire can be connected to the contacts with solder. A resin core solder (60 percent tin, 39.75 percent lead, 0.25 percent antimony) in accordance with Federal Specification QQ-S-571 should be used. An electric soldering iron with a rating of 60 to 100 watts should be used for the smaller contacts. The iron should be maintained at 600 F. The larger size power cables should make use of a 250 to 300-watt soldering iron. MIL-STD-440, NAVSHIPS 250-706.2, MIL-STD-454 Requirement 5, MIL-S-6872 and MIL-S-45743 all relate to proper soldering procedures and quality control of same.

4.2.3.4 SEALING THE CABLE TO THE CONNECTOR -- The cable seal of a deep submergence electrical connector must function in the following areas:

a. It must support the conductors and transmit hydrostatic end forces to the plug body in a manner minimizing strand buckling and subsequent flex fatigue under pressure cycling.
b. It must provide a positive seal against water, moisture, dirt or other contamination, and
c. Provide cable support to reduce conductor strain under tension flexing and vibration.

The effectiveness of a cable seal design in supporting end loads has become increasingly important as higher pressures and endurance to pressure cycling are required. Under pressure, the material within the plug sleeve acts as a composite column (see figure 4-3). Ideally, this column should transmit end forces to the plug body with compression/deflection characteristics that preclude elastic instability and plastic flow in the conductors. In practice, this has not been fully realized and over a particular pressure level, eventual fatigue failure, usually in flexing, will occur after so many pressure cycles. Connectors with higher endurance were obtained when the elements of the composite column were more closely matched in compression/deflection characteristics. The physical properties of the better filling materials were quite different from typical cable seal materials; establishing the adoption of a prepotting step.

At this time, it is felt the prepotting material should have the following general physical characteristics:

a. High compressive modulus, bulk modulus indirectly
b. Low viscosity, for maximum penetration and low void content
c. Low shrinkage, for low voids and residual stress levels
d. Adequate thermal cycling and mechanical shock resistance

Compounds based on epoxies and some of the more reactive, one shot urethane systems more closely approach the above requirements. The systems selected should probably be moderately filled (to increase strength, modulus, and reduce shrinkage) within the limits of not excessively increasing viscosity. Filling should also improve thermal cycling and mechanical shock resistance.

The following materials are felt to offer properties consistent with prepotting material requirements. These compounds are presently being evaluated by the USN under the DOD program.

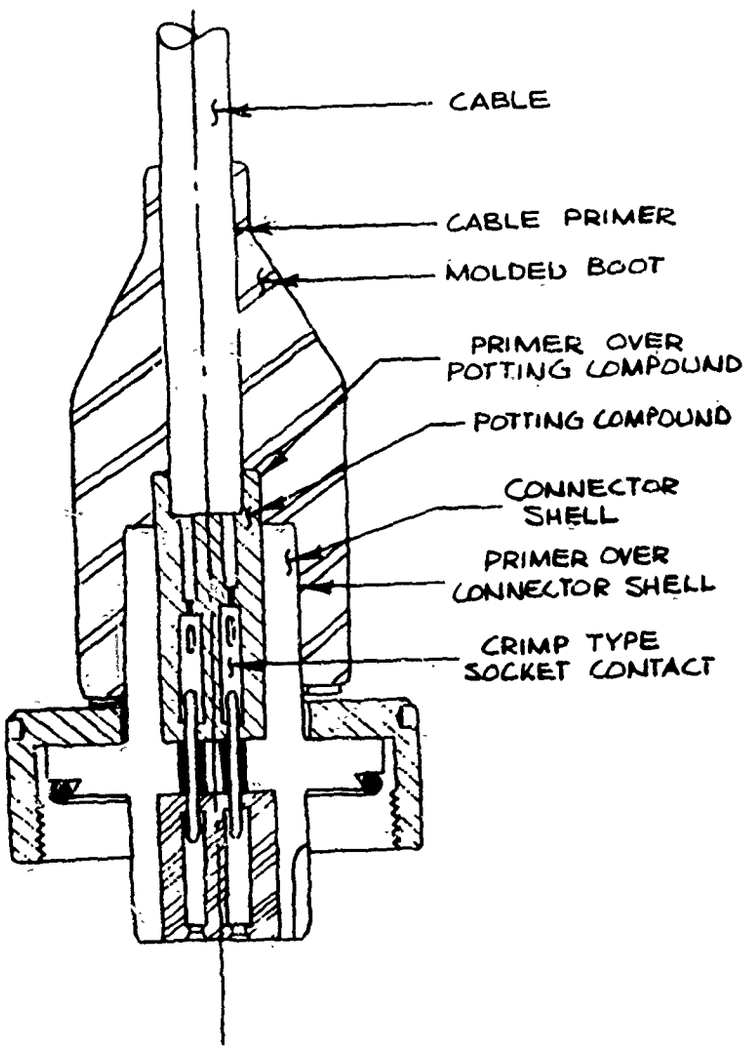

Figure 4-3 Typical Molded Plug Assembly

Component	Parts by Weight	Manufacturer
Sonite 41 Hardener	20 grams	Smooth-on Mfg. Co. 572 Communipaw Avenue Jersey City, N. J. 07304
ERL 2772 Epoxy Resin	100 grams	Union Carbide Corp. Plastics Division 270 Park Avenue New York, N. Y. 10017
222-0803 Hardener	2 grams	Union Carbide Corp.
Milled Glass Fibers	90 grams	Owens-Corning Fiberglass Corp. 717 Fifth Avenue New York, N. Y. 10017

The following commercially available compounds are also being further evaluated for this application:

Stycast 2651	100 grams	Emerson & Cuming, Inc. Canton, Mass.
Catalyst 11	8 grams	
Marblette Resin 121	100 grams	Marblette Corp. Long Island City, N. Y.
Hardener 91	10 grams	

The molded cable-to-plug seal provides lateral cable support, restraint in tension, and the primary seal against water and moisture penetration. Basically, the seal is automatic in nature and dependent on three factors:

a. The bond between the conformal seal and the connector shell,
b. The bond between the seal, and
c. The cable jacketing and the elasticity and resilience of seal itself (figure 4-3).

Three processes are used for fabricating cable seals. For neoprene jacketed cables, compression molding, with or without a transfer operation, and urethane casting (molding) are common. With polyethylene jacketed cable, injection molding with polyethylene is standard practice.

Compression and transfer molding with neoprene compounds have long been utilized for molding connector seals in underwater applications. The cured properties of neoprene compounds, especially when compounded for low-water absorption, have resulted in connector seals with excellent long-term performance. Adhesive systems for bonding neoprene compounds to metals and cured neoprene cable jacketing, provide high performing rubber tearing bonds under a broad range of process conditions.

A neoprene compound which has been successfully used by the USN in this application is as follows:

Components	Parts by Weight
Neoprene WRT	80.0
Neoprene KNR	20.0
Neozone D	2.0
Stearic Acid	0.5
FEF Black	15.0
MT Black	30.0
Light Process Oil	4.0
Red Lead	20.0
Thionex	2.0
Sulfur	1.0

NOTE: The compound is sufficiently safe to allow incorporation of all ingredients and still provide good storage life and handling characteristics. For maximum storage life, the material should be kept in a cold room 40 F or below.

The Dayton Chemical Products Laboratories, West Alexandria, Ohio, metal primer, Thixon P4, in conjunction with the Thixon adhesive, Thixon NM-2 has provided satisfactory bonds of neoprene to stainless steel connector shells.

Presently potting and molding with urethane compounds are finding increasing use in fabricating deep submergence cable seals. This may be attributed to a number of factors:

a. Low compound viscosity permits casting or molding at low pressure with less potential of voids,
b. Low or intermediate temperature curing are within the temperature limitations of all insulating materials, and
c. Tooling and process control with urethanes are not as critical as in the compression or transfer molding of neoprene.

Polyethylene injection molded cable seals to polyethylene jacketed cables are utilized in underwater applications because of a unique combination of excellent dielectric characteristics, particularly at high frequencies, high electrical resistivity, low moisture permeation and low water absorption. The latter two characteristics contribute to the above electrical properties in a continued water environment. Also, the initial material cost and thermoplastic processing capabilities of polyethylene resins offer important economic considerations when larger quantities are involved. While polyethylene offers specific advantages in the cable insulation and jacketing area, associated terminations and connectors present formidable fabrication problems. This is because the only reliable long-term seal or bond to a polyethylene cable jacket is produced by molding with a similar type polyethylene; obtaining a fusion bond to itself. When a bond is required between a polyethylene seal and a metal shell connector or penetration, a process requiring closely controlled metal surface preparation and the molding variables of pressure, temperature, and time, is involved.

Polyethylene resins are produced with a range of basic molecular properties such as average molecular weight, molecular weight distribution, and density. These properties in turn determine most mechanical properties, thermal processing characteristics and environmental stress-cracking resistance. The latter environmental factor is singled out because of its importance in most polyethylene applications. A property related to molecular weight, termed melt index, is a good index of a polyethylene resin's resistance to stress-cracking. Resins with low melt indexes have higher melt viscosities when molten and show better stress-crack resistance.

To obtain the highest mechanical and environmental resistance properties, polyethylene resins used in underwater cables and molded seals should be of the highest density type with low melt index. The high density, low melt index resins, however, are the most difficult to process. Even with proper resin selection, fabrication equipment design and process operation play a major role in the end result. Polymer degradation reflected in reduced mechanical properties and eventual stress cracking can occur if incomplete melting occurs, or if the material is heated to too high a temperature or for too long. Mechanical working of an uncompletely melted polymer can also markly raise the melt index and eventually lead to stress cracking.

Other considerations in polyethylene molded connector and penetrator seals include some limitation on the size and complexity of the seal by the nature of the material and process involved. High density, low melt index resins have high melt viscosities and require fairly high molding temperatures and pressures. On cooling, residual stresses formed in the part on cooling can combine with externally induced stresses to induce stress cracking. The connector/penetrator design must take into account the wide difference in the thermal coefficients between polyethylene and metal. This situation combined with the polyethylene's high elastic modulus can cause appreciable stress to develop.

Many potential problems can be envisioned if the production of polyethylene cabling systems were attempted on a shipyard level. Molding polyethylene seals to connector and cable penetrations, even if the type were small and simple, is beyond shipyard capability. Clean rooms and extensive control of materials and processes are used by the few facilities that do this type of molding. If shipyard molding were confined to less critical inline splice operations, special equipment and process controls would still have to be instituted.

The functional performance and reliability with neoprene or urethane type of cable seals are related to a number of physical properties of the cured compounds. These include:

a. Tensile strength
b. Ultimate elongation } Toughness index
c. Tear strength } Toughness index
d. Modulus of elasticity
e. Moisture permeability
f. Water absorption
g. Electrical properties

h. Adhesion to metals using adhesion primers

i. Adhesion to cable jacketing, usually neoprene, using adhesion primers

j. Environmental stability

   1. Changes in physical properties
   2. Changes in adhesion

The physical properties are fairly self-evident. With experience of various design/development programs in underwater connectors and related hardware, including observations after long-term service, we have weighed some properties as more important than others.

At depths to 2,000 feet, the physical property profile of medium hardness, low water absorption neoprene compounds, and 70-80 Shore A durometer polyether-based urethane compounds, have been satisfactory without prepotting. At deeper depths and extended pressure cycling, the need for prepotting with a higher modulus, lower void material has been established.

Finally, the area of adhesion performance and environmental resistance cannot be overemphasized. Cable seal failure, after a design has been adequately tested and proven, can be traced invariably to poor bonding. The latter may be due to improper screening and selection, or to poor shop practices. When molding urethane to connectors, the primers and urethane specified in the QPL listing of MIL-M-24041 should be used. Shop practice that may contribute to poor bonding performance include: poor surface preparation, contamination, inadequate proportioning of two-part primers, and use of depleted or over-aged materials.

Metal surface preparation should include vapor phase degreasing before and after grit blasting with a clean, relatively coarse, non-ferrous grit. The residual grit should be blown off with clean, filtered, oil-free, compressed air. At no time should the surfaces to be bonded be touched or handled. Metal surface preparation should be performed just prior to bonding, if possible. Cable jacket surfaces should be lightly solvent-wiped with a volatile active solvent, then roughened with a clean, coarse open-grit emery cloth or piece of sanding disk. The surface should be lightly dusted off with a clean dry brush or wiper, but at this point, no solvents should be used.

Some facilities feel they must use a solvent-wiping technique on metals. In this operation the pieces are progressively swabbed with solvent-moistened cloths and the solvent wiped off before it has time to dry. This operation requires oil-free solvent and clean, soap-free cloths.

Vapor phase degreasing is far superior to solvent-wiping. In vapor phase degreasing, the contamination is removed by a refluxing action in which the pure solvent vapor condenses on the cold workpiece, dissolves the contamination capable of solution, and drips off the connector sleeve. This action ceases when the metal reaches the vapor temperature and it serves no purpose to leave the connector shell in the degreaser for longer times.

Contamination of the metal surface can occur in handling or just standing in air. The primer can be contaminated during mixing or by improper resealing of the original containers. Containers, mixing spatulas and application brushes should be solvent-wiped with a disposable wiper and clean

solvent before use. When handling solvents, always pour the solvent out of the container, not holding the cloth or wiper to the spout. The latter procedure could possibly transfer contaminants to the solvent supply. Release agents are also a source of potential contamination. Without adequate direction, the typical technician applies too heavy a coat of a release agent, be it the silicone type or a fluorocarbon. With urethane compounds, one part Dow Corning DC-20 diluted with three parts of hexane provides a release system with minimum buildup when wiped on and quickly wiped off with disposable wipes.

Inaccurate weighing of two-part primers may sometimes provide less than optimum results. Many two-part primers have fairly broad latitude in mixing and when less than typical bonding occurs, the possibility of a depleted reactive component should also be investigated.

Isocyanate curing agents react readily with atmospheric moisture and lose some of their strength. Bottles and containers containing reactive components should be opened for short as possible periods, their seal closure wiped, and then resealed.

It is recommended that connectors be prepotted with a high compressive modulus epoxy compound, followed by molding the wired and potted assembly with primers and urethane specified in MIL-M-24041.

4.2.4 SUMMARY -- This section has reviewed the various types of harness designs available. Design parameters for proper harness configurations have been listed. Recommendations have been made for the fabrication of harnesses to suit the various ocean operating depths. Quality control considerations and harness test requirements are covered in section 6.

Section 4

REFERENCES

1. Behr, S. et al. Handbook of Electric Cable Technology For Deep Ocean Applications, U.S. Naval Research and Development Laboratory, Annapolis, Md., November, 1970.

2. Wiring, Molding, Testing Installation, Maintenance and Repair Procedures for Watertight Electrical Submarine Connectors and Penetrators, NAVSHIPS Dwg NR-1-302-2663185, Naval Ship Engineering Center, Hyattsville, Md.

3 Molding and Inspection Procedures for Fabricating Connector Plugs for Submarine Outboard Cables, NAVSHIPS 0962-022-2010, Naval Ship Engineering Center, Hyattsville, Md.

4. Anderson, J.D. Crimping Manual for The Electronic Industry, Burndy Corp., Norwalk, Conn., 1965.

5. Technical Manual -- Installation Practices for Aircraft Electric and Electronic Wiring, NAVWEPS 01-1A-505, July 1, 1965.

Section 5

TABLE OF CONTENTS

Section	Title	Page
5.1	Material Selection	5-1
5.2	Metal Alloys	5-1
5.2.1	General or Uniform Pitting Corrosion	5-2
5.2.2	Crevice Corrosion	5-4
5.2.3	Galvanic Cell Corrosion	5-4
5.2.4	Selective Phase Corrosion	5-5
5.2.5	Stress Corrosion Cracking	5-5
5.2.6	Corrosion Fatigue	5-6
5.2.7	Erosion/Cavitation	5-6
5.3	Corrosion Guidelines for Specific Metal Alloys	5-6
5.3.1	Compatability of Materials	5-9
5.4	Corrosion Control by Coating of Metals	5-10
5.5	Guidelines for Selecting Metal Alloys for Sea Water Service	5-11
5.6	Non-Metallics	5-11
5.6.1	Discussion	5-21
5.6.2	Material Performance	5-21
5.7	Guidelines for Selecting Non-Metallic Material for Sea Water Service	5-23

PRECEDING PAGE BLANK - NOT FILMED

Section 5

LIST OF FIGURES AND TABLES

Figure	Title	Page
5-1	Corrosion Potentials in Flowing Sea Water (8 to 13 Ft./Sec.) Temperature Range 50 to 80 F.	5-3

Table	Title	Page
5-1	Corrosion Behavior of Common Alloys in Sea Water	5-6
5-2	Conspectus of Properties of Alloys for Sea-Water Application	5-13
5-3	Penetrator and Hull Material Compatability	5-19
5-4	Some Deleterious Effects of Ocean Deep Environment Upon Plastics and Elastomers	5-23
5-5	Normal Physical Properties for Some Generic Types of Plastic Intended for Electrical Use in Deep Ocean Environment	5-25
5-6	Approximate Isothermal Bulk Moduli for Some Plastics	5-29

Section 5

MATERIAL SELECTION GUIDELINES FOR OPTIMUM PERFORMANCE IN SEA WATER

5.1 MATERIAL SELECTION

This section deals with factors governing the choice of engineering materials for use in sea water and is divided into two parts. The first part devotes itself to metal alloys, and the second part considers non-metallics (i.e., elastomers and plastics). A bibliography on sea water corrosion is provided in the Handbook to give the reader a more extensive exposure to factors which should be considered when designing for the sea water environment.

5.2 METAL ALLOYS

The engineering use of metal alloys in sea water is, for the most part, influenced by a material's resistance to corrosion. If a material exhibits a low corrosion resistance, a sufficient degree of degradation of the material can occur resulting in possible failure of the component. Therefore, it is imperative that the designer be aware of the corrosion aspects of a material before incorporating it into a submersible system.

Corrosion is affected by such a wide number of variables that it is difficult to simply rate materials as acceptable or unacceptable. This is primarily due to the fact that the phenomenon can occur naturally (the extent of which is affected by several environmental factors as well as variables governed by the material itself), and additionally, it can be induced by inappropriate design application or improper material processing. Corrosion of alloys can occur in several ways, the most common forms being:

a. General or uniform corrosion and pitting
b. Crevice corrosion (not limited to man-made crevices)
c. Galvanic cell corrosion
d. Selective phase corrosion (including intergranular corrosion)
e. Stress corrosion cracking
f. Corrosion fatigue
g. Erosion due to cavitation.

Corrosion resistance is as much a function of environmental variables as well as the nature of the metallic alloy and the different corrosion mechanics described above can be influenced greatly by the following environmental factors:

a. Time (ranging from less than one hour for some cases of stress corrosion cracking to years for general wasting.)
b. Temperature

c. Oxygen content of water

d. Salinity/chlorinity of water

e. Service depth

f. Proximity of ocean floor and its make-up.

g. Water velocity at the object surface.

h. Water turbulence

i. Metal alloy condition (welded, cold drawn, etc.)

j. Stress level in the material (residual or imposed loads).

k. Load cycle rate and magnitude.

l. Existence of protective films (anodizing, paint or other applied coating).

m. Presence of similar alloys or nonmetallic materials

n. Object geometry.

o. Presence of dissimilar metals with regard to type of metal alloy, proximity and extent of exposed surfaces.

p. Presence of marine fouling organisms and their affinity for the material.

q. Presence of leakage electrical current.

Not only do the above factors influence the degree of corrosion of a metal alloy, but the environmental factors may influence one another as well. Mission variables of a submersible such as operating depth, location, and length of submerged time will influence or determine environmental variables such as water temperature, oxygen content, salinity, marine organisms, water velocity, etc. By simply changing the location of a mission, a whole new set of variables which influence corrosion can be generated. This example illustrates why the topic of corrosion resistance cannot be easily categorized as good or bad for a particular alloy and emphasizes the need to analyze the problem on a case basis.

The best approach to understanding the problem and instituting general guidelines is to define the mechanics involved for each type of corrosion and establish the relation between alloy and environmental factors in producing such corrosion. By doing this, a tabular resume of metallic alloys can be formed with some general comments concerning their advantages and disadvantages for use in sea water. Figure 5-1 serves as an aid in selecting suitable material candidates for use in sea water; the ultimate choice as to what constitutes the optimum material will be dictated by other factors such as strength, cost, availability, ease of fabrication forming, or welding, etc.

5.2.1 GENERAL OR UNIFORM AND PITTING CORROSION -- Corrosion is the result of an electrochemical reaction between a metal alloy with its corrosive environment. Uniform corrosion occurs when the surface microstructure is relatively homogeneous and access of the corrosive fluid to the metal surface is unrestricted.

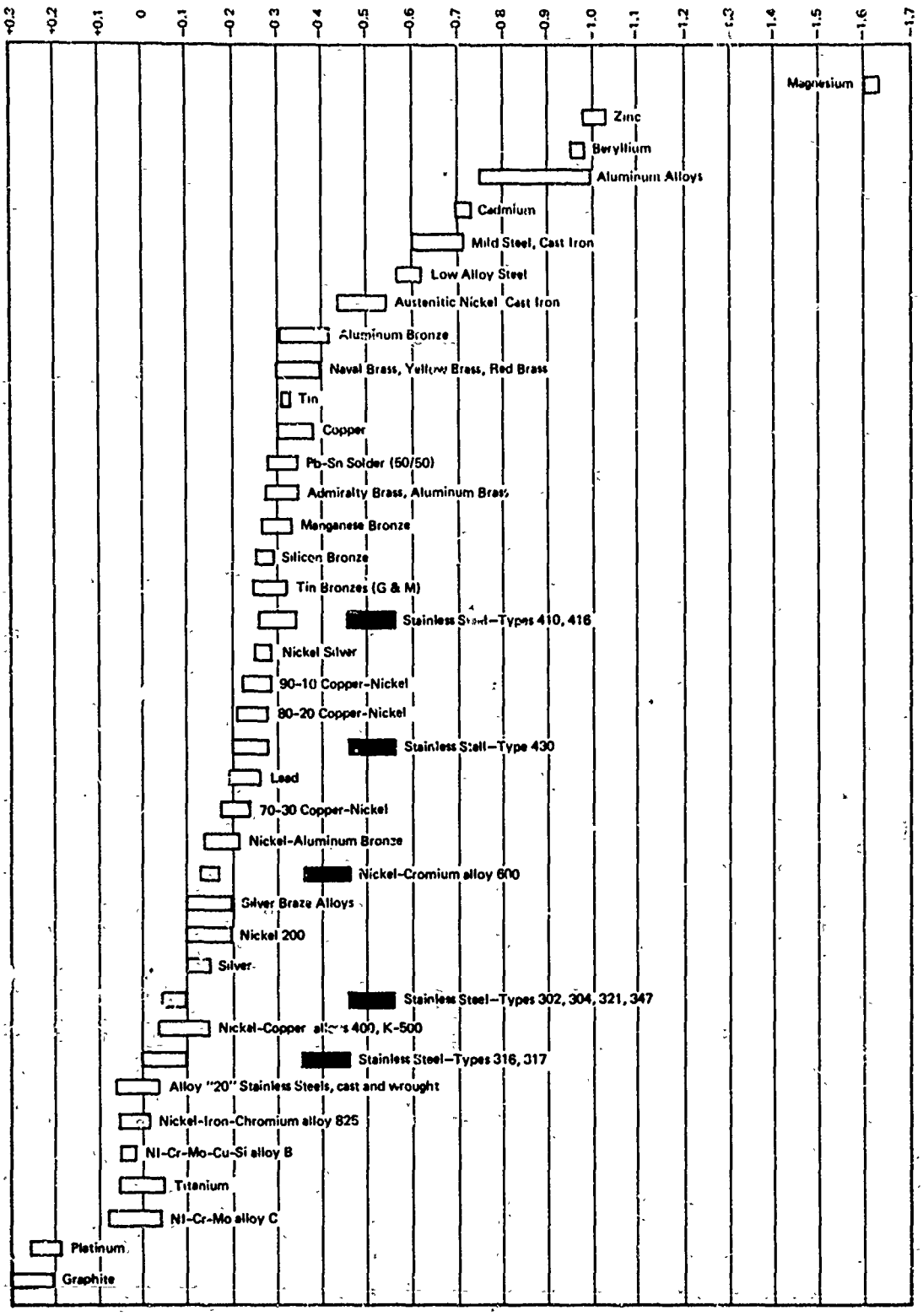

Alloys are listed in the order of the potential they exhibit in the flowing sea water. Certain alloys indicated by the symbol: ▬ in low-velocity or poorly aerated water, and at shielded areas, may become active and exhibit a potential near -0.5 volts.

(from reference 11)

Figure 5-1. Corrosion - Potentials in Flowing Sea Water (8 to 13 Ft./Sec.) Temp Range 50 - 80 F

Pitting corrosion, on the other hand, involves chemical activity in localized regions such as surface grain boundaries or shielded areas where a localized galvanic couple can be established. Pitting can be of special concern in sheet or thin plates as complete penetration can result.

5.2.2 CREVICE CORROSION -- Crevices or crevice-like formations can cause localized galvanic couples in the vicinity of the crevice. Stagnation of the sea water present in this formation can generate concentration cells. These cells are caused by any of three basic occurrences and are known as oxygen, metal ion, and active-passive cells. The first type of cell originates when sea water becomes stagnated in a crevice formation and a differential oxygen concentration in the sea water results. This leads to a localized galvanic cell between the two zones with the metal surface adjacent to the oxygen depleted water becoming the anode. As an electric current is established from metal to sea water in the oxygen-poor region, accelerated pitting corrosion can result.

A similar mechanism exists in metal-ion concentration cells where a metal, which displays a tendency to go into sea water solution, generates an ion rich solution in or near a crevice. The proximity of sea water containing a lesser amount of dissolved metal generates an electrical couple between these two regions. The metal adjacent to the water with a lower ion concentration becomes the galvanic anode and is attacked.

The active-passive cell can occur with alloys that develop protective passive films on their surfaces. Crevices or stagnation zones in the adjacent sea water result in oxygen depletion which prevents the protective film from reforming once it is penetrated or destroyed. Accelerated corrosion results in this area from the resulting oxygen cell formation.

Materials susceptible to crevice corrosion respond in varying degree to different types of crevice formation, consequently, the resulting degree of corrosion is difficult to predict.

5.2.3 GALVANIC CELL CORROSION -- When two dissimilar metals are in electrical contact and immersed in a sea water electrolyte, they establish an electrical potential which causes the more negative or active metal to corrode. The corrosion is the result of the active metal dissolving in the electrolyte in contact with it. The galvanic scale establishes how severe a galvanic couple will exist and how serious will be the resultant corrosion. The further apart the constituent metals are in the series, the more accelerated will be the corrosion.

When an underwater component design employs dissimilar metals, several measures can be employed to reduce or eliminate the galvanic couple. Choice of materials close to one another in the galvanic series will minimize the corrosion acceleration potential. An active material or anode of a couple must never be used in fabrication of a small load bearing member. This item is normally fabricated from the more noble metal due to the fact that galvanic corrosion rate varies in direct relation to the ratio of wetted area of cathode to anode. Coating of the cathodic material decreases the area ratio and reduces the galvanic action. This procedure is often used in conjunction with cathodic protection. Cathodic protection consists of providing a sacrificial

anode electrically connected to the member that would otherwise be the anode of the galvanic couple. This allows the sacrificial anode to be consumed in preference to the material to which it is attached.

Galvanic couples can often be avoided by electrically insulating the dissimilar metals using such passive materials as acetal (Delrin) gaskets. It must be remembered that galvanic couples can be used to the designer's advantage also. A prime example of this is the stainless steel hull penetrator mounted to a steel pressure hull. Creation of a galvanic couple protects the stainless penetrator from suffering the pitting corrosion that would result if the two were electrically isolated. By generating the galvanic couple, the hull becomes the anode; attaching zinc anodes to the hull allows these to be sacrificed in the galvanic couple. The result of this procedure is to eliminate extensive pitting of the penetrator and limit or prevent hull corrosion by painting and attachment of sacrificial anodes to it.

5.2.4 SELECTIVE PHASE CORROSION -- A dangerous type of corrosion is that in which particular constituents of certain alloy structures are attacked by sea water. Some alloys containing iron, zinc, aluminum, or nickel are subject to selective phase corrosion. The prime danger in this type deterioration is that in many cases the component may retain its original shape and appearance but has lost much of its mechanical strength allowing it to escape visual detection while causing a hazardous situation. It is of particular significance when encountered in thin sections such as threaded fasteners or in seal surface areas such as O-ring grooves.

This type corrosion can be found in some cast iron alloys, brasses or bronzes containing more than 15 percent zinc and some aluminum bronzes with less than four percent nickel content.

Austenitic stainless steels are victims of a closely related type of selective phase corrosion called intergranular corrosion when reheated to the 800 F - 1,650 F range. The sensitizing of the alloy in this temperature range causes carbon to combine with the chromium and results in precipitation of complex chromium carbides at the grain boundaries when cooled. Immersion in sea water causes chromium-poor grain boundaries to corrode rapidly. Intergranular corrosion is a common occurrence in regions adjacent to welds in stainless steels when improper alloy grades are used. Intergranular corrosion can be avoided in three ways:

a. Restrict carbon content of alloy to 0.03 percent max. (304L, 316L grades).

b. Stabilize the carbon with titanium or columbium (321, 347 SST and FE-NI-CR alloy 20CB, NI-FE-CR alloy 325 are examples).

c. Prevent precipitation of carbide formation by quenching from temperatures above 1950 F.

5.2.5 STRESS CORROSION CRACKING -- This phenomenon occurs only in certain alloys under a prescribed set of conditions in a marine environment. Basically, what occurs is that the metal alloy, while under constant tensile load (imposed and/or residual) and subject to a particular corrosive atmosphere, can experience cracking in relatively short time periods. The crack which may result is usually initiated at a stress raiser such as a pit or other material flaw.

5.2.6 CORROSION FATIGUE -- This type of material attack is generally similar to stress corrosion cracking inasmuch as the material must be subject to a corrosive environment; however, the load in this case must be fluctuating. Corrosion fatigue is fairly rare but has been of recent concern in suspension and tow wire ropes and also in recent ship propeller studies.

5.2.7 EROSION CAVITATION -- This mechanism occurs on such components as valves, hydrofoils, pump inlets, pump impellers and ships' propellers. Flow separation and water velocity characteristics such as eddy currents create localized low pressure pockets resulting in alternate gas bubble formation (boiling at low temperature and pressure) and collapse. This process involves a large energy release in the form of minute bubbles impinging on the component creating highly localized regious of stress very similar to sandblasting. The result may be rapid removal of surface films resulting in accelerated pitting or erosion in the region of bubble collapse. Design materials have been divided into four categories which vary from highly resistant to unsuitable for this type application. At normal erosion tendencies, inherent corrosion resistance to sea water appears to have a significant effect on resistance to cavitation erosion. Some tests at high level cavitation show little or no difference in cavitation resistance for the same metal in sea water compared with fresh water except for some steels. For additional information on the basic types of corrosion, see references 1 through 10.

5.3 CORROSION GUIDELINES FOR SPECIFIC METAL ALLOYS

Some of the more commonly used metal alloys used in the sea water environment are given preliminary evaluation in the following table:

Table 5-1. Corrosion Behavior of Common Alloys in Sea Water (From references 1 and 2)

ALLOY Type	ALLOY Designation	Resistance	Remarks
Nickel	Hastelloy C	Excellent	Limited availability. Difficult to fabricate.
	Inconel 625	Excellent	New alloy with limited service experience. More easily fabricated then Hastelloy C. Available as wire rope.
	Monel 400	Good	Pits (5-15 mils per year) in stagnant sea water. Excellent resistance to velocity. CuNi 70-30 is a better general - purpose choice, but MONEL 400 may be used when the greater strength is required. High strength version is K-500. Use cathodic protection.
	Inconel 718	Good	High strength levels (130-170 ksi) available, but use somewhat limited by pitting attack.

Table 5-1. (Cont'd)

ALLOY Type	ALLOY Designation	Resistance	Remarks
Stainless Steel	Alloy 20	Good	Best resistance to pitting of more common stainless steels. Pitting in stagnant water 5-10 mils per year. Should be provided with cathodic protection.
	Type 316	Fair	May pit in excess of 50 mils per year in stagnant water. May be used for outboard equipment if in electrical contact with hull and cathodic protection is used.
	Type 304	Poor	Do not use.
	Type 302	Poor	Do not use.
	Type 303	Poor	Do not use.
	Type 310	Poor	Do not use.
	Type 400 series		Do not use.
	Type 216		Relatively new alloy.
	ARMCO 22-13-5		New alloy, manufacturer claims corrosion resistance superior to 316 type.

Notes concerning the use of stainless steel:

Where permissible SST alloys are used, all mechanical fasteners (nuts and bolts) used should be coated with zinc chromate paste prior to installation.

Isolated connectors or components of CRES such as cable connectors, lights, cameras, arms, etc., must either be grounded directly to the pressure hull or electrically connected to anodic materials such as zinc or aluminum alloy anodes. However, it is preferable that these items be designed from other materials whenever possible. Isolated connectors or components are those pieces of equipment which are independent of any direct electrical connection with the pressure hull.

When stainless steels are used, they should be types 316 or 316L for wrought forms and ACI Grades CF-8M or CF-3M for castings. Where welding is required, 316L or CF-3M should be used

Although 17-4 PH stainless steel in the H1025 or higher temperature condition is less susceptible to pitting and stress corrosion cracking than the 300 series stainless steels, it does require cathodic protection when exposed to sea water. To protect from general corrosion (light surface rusting), 17-4 PH stainless steel should be painted. 17-4 PH stainless in the H900 condition is not acceptable for use in sea water.

The use of type 303 or 303 Se should be prohibited in any sea water applications. These materials have inferior corrosion resistance compared with types 304 or 316.

Use of other 300 series stainless steels may be considered on an individual case basis with approval by a materials review agency.

Application of Welded Materials

Low carbon grades of austenitic stainless steels are preferred for welded assemblies to reduce the susceptibility to carbide precipitation in the grain boundaries of the heat-affected zone. Carbide precipitation removes chromium from the grains of the metal and forms relatively stable chromium carbides. The result of this is that a galvanic cell is set up between the grain boundary carbides and the adjacent area of the grain. In a sea water environment, this heat-affected zone becomes very susceptible to intergranular corrosion. The precipitated carbides can be dissolved by an annealing heat treatment after welding; however, if annealing is not practical, the low-carbon grades which are less susceptible to carbide precipitation should be used for welded components.

Alloy Type	Alloy Description	Resistance	Remarks
Copper Base	CuNi 70-30	Excellent	Will suffer slight corrosion, but is one of the best general - purpose alloys for sea water. Outstanding for piping. Very good for low velocity and stagnant sea water; resists pitting and crevice corrosion.
	CuNi 90-10	Excellent	Somewhat less resistant to general corrosion than 70-30 alloy.
Casting Alloys Only	NiAl Bronze	Good	Use MIL-B-21230 Alloy 1.
	NiAlMn Bronze (Superston)	Good	Use MIL-B-21230 Alloy 2.

Notes: Copper-Base Alloys - In general, most of the copperbase alloys are resistant to sea water corrosion but are subject to other corrosion effects. For example, some aluminum bronzes are subject to dealuminumification in the absence of nickel. Therefore, nickel aluminum bronzes must contain a minimum of four percent nickel for sea water uses.

The high-strength brasses such as manganese bronze are subject to stress-corrosion cracking and must be used with caution.

High zinc brasses are subject to dezincification and should not be used in sea water without review by a material review agency.

Alloy Type	Alloy Designation	Resistance	Remarks
Titanium Base	Pure Ti	Excellent	
	Ti-6Al-4V	Excellent	Each production lot used should be evaluated for resistance to stress-corrosion cracking in sea water, and in any organic solvents which are likely to come in contact with the alloy
Aluminum Base	5000 Series	Good	5083 best, 5086 also good. Use A-356 for castings. Must be isolated from mild steel or other cathodic metals. Close proximity to copper alloys may cause severe pitting even though the aluminum is electrically isolated. Fasteners used with aluminum alloys must be aluminum alloy, stainless steel or zinc cadmium plated steel (non-immersion) and coated with zinc chromate sealant.
Aluminum Base	6061, A-356	Fair-Good	Remarks above apply. Responds well to cathodic protection. Is often used because of availability, but 5083 or 5086 is the alloy of choice.
	2000	Very Poor	Do not use.
	7000 series	Poor	Do not use for critical components. Some, but not all 7000 series alloys can can be used successfully if painted and provided with cathodic protection.
Magnesium		Very Poor	Do not use.
Carbon and Low alloy Steels		Fair	Must be protected by painting and anodic protection.

5.3.1 COMPATABILITY OF MATERIALS -- Alloys such as 300 series stainless steels and Ni-Cu (Monel) alloys which are susceptible to crevice corrosion should never be used in sea water applications where they are in contact and form a crevice with the same alloy, another susceptible alloy, or with a non-metallic material. They may be used in contact with alloys that are significantly less noble (anodic) provided that the surface area or wall thickness of the less noble alloy is sufficient to support and increase corrosion that will occur as a result of the galvanic couple.

In sea water, copper-base alloys (70-30 Cu-Ni and bronzes) may be either anodic or cathodic to stainless steel (304 and 316) depending on whether the stainless steel is in the passive or active condition. Therefore, the direct coupling of copperbase alloys to stainless steel in sea water should be avoided wherever possible.

If design requirements are such that use of copper-base alloys joined to stainless steel cannot be avoided, the following guidelines should be followed:

a. In connectors such as flanges, the faying surfaces between the copper-base alloy and stainless should be coated with zinc chromate paste. The stainless steel part of the component should either be grounded to the hull or galvanically protected with zinc or aluminum anodes. The zinc chromate paste assists in protecting the stainless in the crevice and should be replaced when depleted.

b. In any application where copper-base alloys and stainless steel are coupled together, they must be cathodically protected. As a general rule, the stainless steel part of the component should be coupled to sacrificial anodes. If this is not practicable and there is a secure electrical connection between the stainless steel and copper-base alloy, then the copper-base alloy could be coupled to the anodic material.

c. All designs where copper-base alloys and CRES must be coupled together should be submitted to materials engineering personnel for review and approval.

In the galvanic series in sea water, titanium alloys are on the noble end relatively close to type 316 stainless steel (passive) and Monel. Therefore, titanium alloys are cathodic to most materials when coupled and exposed to sea water and the rules governing galvanic corrosion should be applied. Unlike type 316, stainless steel and Monel, titanium alloys are generally not susceptible to pitting and crevice corrosion (some titanium alloys are susceptible to pitting in very hot sea water).

5.4 CORROSION CONTROL BY COATING OF METALS

The prevention and control of corrosion of metal exposed to sea water service is generally obtained by the use of organic coatings (although other means and combinations are used). Organic coatings protect metals from corrosion by interposing a continuous, inert, adherent film between the metal and the environment.

The most important factor affecting the performance of any coating (no matter how good it is) is preparation of the surface to be coated. The surface should be completely free of rust, loose dirt, scale, loose paint, oil, grease, salt deposits, and moisture. Also, surface and ambient temperatures should be, generally, between 40 and 85 F. Blast cleaning is the most effective method of cleaning steel metal surfaces, but should be used with caution to avoid damage to nonferrous metal surfaces. Also, blasting should be avoided where electrical equipment and apparatus are involved to avoid contamination and damage, and power disc sanding and/or grinding or chemical treatment should be used.

A wide choice of coatings are available to provide corrosion protection in sea water. Some examples of the various generic systems are as follows:

<u>Vinyl</u> F-117 (one coat 0.5 mil), F-119 (four coats at 1.5 mils each)
F-117 (0.5 mil), F-14N (two coats at 2.5 mils each)
F-117 (0.5 mil), F-116 (two coats at 1.5 mils each)

Epoxy (MIL-P-23236)

Devran 202 (2 mils) and Devran 203 (two coats at 3.5 mils each)

Devran 202 (2 mils) and Devran 215

Tarset (one coat red at 8 mils and one coat black at 8 mils)

Amercoat 83 (2 mils), Amercoat 84 (two coats at 3 mils each)

Intergard 4421 and 4424 (5 mils)

Epoxy-Isocyanate (MIL-P-23236)

Devran 202 (2 mils), Devran 203W (two coats at 2.5 mils each)

Devran 202 (2 mils), Devran 215W (one coat at 6 mils)

Isocyanate (MIL-P-23236)

Laminar X-500 primer (1.5 mils), X-500 and topcoat (three coats at 1.5 mils each)

Coatings should be applied according to manufacturer and/or military instruction.

5.5 GUIDELINES FOR SELECTING METAL ALLOYS FOR SEA WATER SERVICE

Table 5-2 presents a tabular collection of candidate material properties. The materials included represent the majority of the engineering alloys available to designers of sea water service equipments.

Table 5-3 provides a concise collection of data concerning alloy corrosion and compatibility. It includes all the materials being considered in the current state of the art and some projected for use in the near future.

5.6 NON-METALLICS

Extensive testing has been done over the past several years in establishing many plastic materials suitable for marine application. However, due to the wide range of environmental variables as well as processing variables and lack of standard test methods in many instances, data has shown a great degree of scatter. It is not uncommon to find contradictory data concerning tests of this nature. Materials of the same generic type in similar deep ocean environment have been reported by some investigators to have displayed no effects on their mechanical properties while tests by others reported severe degradation. In order to be aware of possible unsatisfactory materials, all materials showing adverse effects from deep ocean environmental tests are summarized in table 5-5.

Not all test data reflects wide scatter or is of a contradictory nature. Much of the information gathered by researchers, although showing considerable scatter, can establish general trends. Data generally has shown agreement that hydrostatic pressure level has no significant effect on water permeability of solid non-metallics. Other data confirms that certain damaging types of marine borers will attach themselves and inflict mechanical injury to almost all plastics and elastomers, depending on exposure conditions. Bulk modulus and compressibility information is difficult to obtain and notably lacking in most literature and vendor material specifications. What

PRECEDING PAGE BLANK - NOT FILMED

PROPERTIES / CANDIDATE METAL	CONDITION OR FINISH	BRINELL HARDNESS	DENSITY (LB/IN^2)	ELASTIC MODULUS X 10^6 (LB/IN^2)	ULT. STRENGTH X 10^5 (LB/IN^2)	0.2% OFFSET YIELD STRENGTH X 10^3 (LB/IN^2)	ELONGATION IN 2-INCHES (%)	ENDURANCE LIMIT (FATIGUE) X 10^3 (LB/IN^2)	TOUGHNESS NOTCH SENSITIVITY	GALLING: WITH OTHER MARINE MATERIALS
STAINLESS STEELS:										See Table 10-5
216	ANNEALED	--	0.287		100	55	45	60[a]		
304	ANNEALED	149	0.29	28	82	35	60	34		
304L	ANNEALED	143	0.29	28	81	33	60	38		
316	ANNEALED	149	0.29	28	80	30	60	38		
316L	ANNEALED	146	0.29	28	81	34	55	38		
ARMCO 22-13-5	ANNEALED	--	0.285	28	100	55	40			
HARDENABLE SST:										
17-4PH	H1150	N.S.[c]	0.281	28.5	145	125	19	~80		
ALLOY STEELS:										
HY-80			0.285	29	N.S.[c]	80	20		(d) VG	
HY-100			0.285	29	N.S.[c]	100	18		(d) VG	
HY-130/150			0/285	29	N.S.[c]	130/150	19		(d) VG	
ALUMINUM ALLOYS:										ACCE WHEI ANOI
6061	T6	95	0.098	10	45	40	12	~14		
7079	T6	145	0.099	10.3	78	68	14	FAIR[f]		

NOTES: (a) For 10^7 cycles
(b) Not fully investigated
(c) Not specified
(d) Very good
(e) Requires post weld seat treetment
(f) Low cycle note

Table 5-2. Conspectus of Properties of Alloys for Sea Water Application

TOUGHNESS NOTCH SENSITIVITY	GALLING: WITH OTHER MARINE MATERIALS	SURFACE CONDITIONING	COEFFICIENT OF THERMAL EXPANSION (LL IN/IN/F°)	CORROSION RESISTANCE: GENERAL IN SEA WATER	CORROSION RESISTANCE: CREVICE CORROSION SUSCEPT-IBILITY	CORROSION RESISTANCE: STRESS CRACKING SUSCEPT-IBILITY	MACHINABILITY INDEX (AISI B1112 - 100)	WELDABILITY INDEX
	See Table 10-5	PASSIVATE	3.5		(BETTER THAN 316 SST)		~50	(b)
			9.6	PITTING	YES	IN SENSITIZED CONDITION	50	Ex
			9.6	PITTING	YES	NONE	50	Ex
			8.9	GOOD	YES	IN SENSITIZED CONDITION	50	Ex
		PASSIVATE	8.9	GOOD	YES (BETTER THAN 316L)	NONE	50	Ex
		PAINT	6.0	GOOD	SLIGHT	LOW	N.S.(c)	GOOD
(d) VG		PAINT	--	POOR	SLIGHT	LITTLE/NONE	~40	Ex
(d) VG		PAINT	--	POOR	SLIGHT	LITTLE/NONE	~40	Ex
(d) VG		PAINT	--	POOR	SLIGHT	LITTLE/NONE	~35	GOOD
	ACCEPT WHEN ANODIZED	ANODIZE	13	VERY GOOD	SLIGHT	SOME	300	(c) GOOD
		PAINT OR ANODIZE	13.1	POOR	HIGH	HIGH	300	POOR

PRECEDING PAGE BLANK - NOT FILMED

PROPERTIES / CANDIDATE METAL	CONDITION OR FINISH	BRINELL HARDNESS	DENSITY (LB/IN^2)	ELASTIC MODULUS X 10^6 (LB/IN^2)	ULT. STRENGTH X 10^5 (LB/IN^2)	0.2% OFFSET YIELD STRENGTH X 10^3 (LB/IN^2)	ELONGATION IN 2-INCHES (%)	ENDURANCE LIMIT (FATIGUE) X 10^3 (LB/IN^2)	TOUGHNESS NOTCH SENSITIVITY
COPPER ALLOYS:									
Cu-Ni-Fe (CA 716)	ANNEALED (CAST)		0.32	22	~70	~35	~30	--	--
Cu-Ni-Be (CA 717)	SOLUT. TREATED		0.318	22	77	38	42	22.5(h)	--
Cu-Ni-Ce (IN 732)			0.319	22	88	55	33	--	--
NICKEL ALUMINUM BRONZE	ANNEALED	N.S.(c)	0.279	17.5	90	48	18	--	--
NICKEL COPPER ALLOYS:									
MONEL 400 (Ni-Cu)	ANNEALED	121	0.319	26	80	35	40	42(h)	--
MONEL K500 (Ni-Cu-Al)	AGE HARDENER	248	0.306	26	130	90	25	45(h)	--
NICKEL-BASE SUPER ALLOYS:									
INCONEL 600	ANNEALED	137	0.304	31	90.5	36.5	47	49	--
INCONEL 625	ANNEALED	--	0.305	29.8	120/150	60/95	60/30	45	--
INCOLOY 325	COLD DRAWN & ANNEALED	160	0.294	28.3	85/105	35/60	50/30	--	--
HASTELLOY C	HEAT TREATED	241	0.323	29.8	121	57.3	47.5	--	--

NOTES:
(g) Estimated
(h) For 10^8 cycles
(i) Perylco 717
(j) MIL-B-24059, Amendment
(k) Stagnant sea water
(l) Controlled atmosphere (contamination)
(m) In mud ocean floor and sea water
(n) Good machinability when annealed
(o) Also weldable to steels
(p) Extra low interstitial (low temperature stre
(q) Anodizing or lithium carbonate treatment av
Fatigue strength impaired

Table 5-2. (Cont'd)

ELONGATION IN 2-INCHES (%)	ENDURANCE LIMIT (FATIGUE) X 10^3 (LB/IN^2)	TOUGHNESS NOTCH SENSITIVITY	GALLING: WITH OTHER MARINE MATERIALS	SURFACE CONDITIONING	COEFFICIENT OF THERMAL EXPANSION (LL IN/IN/F°)	CORROSION RESISTANCE			MACHINABILITY INDEX (AISI B1112 - 100)	WELDABILITY INDEX
						GENERAL IN SEA WATER	CREVICE CORROSION SUSCEPT-IBILITY	STRESS CRACKING SUSCEPT-IBILITY		
~30	--	--	See Table 10-5	--	9	GOOD	YES	NONE	~40(g)	TEST STAGE
42	22.5(h)	--		--	8.82	GOOD	YES	--	~40(g)	N.W.
33	--	--		--	9.1	GOOD	SLIGHT	NONE	~40(g)	TEST STAGE
18	--	--		--	--	FAIR	SLIGHT	NONE	--	--
40	42(h)	--		--	7.7	PITTING(k)	YES(k)	NONE	55	GOOD
25	45(h)	--		--	7.6	PITTING(k)	YES(k)	NONE	35	GOOD
47	49	--		--	7.9	LOCAL(k) PITTING	YES	NONE	--	(d)(o)
60/30	45	--		--	7.1	EXCELLENT	NONE	NONE	~15(g)	V.G.
50/30	--	--		--	7.8	SLIGHT PITTING	SLIGHT	NONE	~15(g, n)	GOOD
47.5	--	--		--	8.2	EXCELLENT	NONE	LITTLE/ NONE	10	FAIR

sea water
n annealed

(low temperature strength)
arbonate treatment available --
tred

PRECEDING PAGE BLANK - NOT FILMED

PROPERTIES / CANDIDATE METAL	CONDITION OR FINISH	BRINELL HARDNESS	DENSITY (LB/IN^2)	ELASTIC MODULUS X 10^6 (LB/IN^2)	ULT. STRENGTH X 10^5 (LB/IN^2)	0.2% OFFSET YIELD STRENGTH X 10^3 (LB/IN^2)	ELONGATION IN 2-INCHES(%)	ENDURANCE LIMIT (FATIGUE) X 10^3 (LB/IN^2)	TOUGHNESS NOTCH SENSITIVITY	GALLING: WITH OTHER MARINE
TITANIUM ALLOYS:										
TI (COMMERCIALLY PURE)	--	225	0.163	15	65	55	20	--	GOOD	GOO SUR CON
TI 6AL-4V	ANNEALED	330	0.160	15/ 17.5	140	130	~12	--	FAIR	
TI 6AL-4V (ELI) (p)	ANNEALED	530	0.160	15/ 17.5	140	130	~12	--	FAIR	
ULTRA-HIGH-STRENGTH STEEL:										
(s) 12 Ni, 18 Ni MARAGING	AGE HARDENED	390	0.290	28	188	180	14	85 (f) (n)	GOOD	
	ANNEAL, AIR COOLED AND AGED	500	0.290	26.5	255	240	10	110	FAIR	
9 Ni 4 COBALT .20 CARBON	HEAT TREAT QUENCH & DOUBLE TEMPERED	--	0.284	28.9	195/220	170/194	19/12	(f) (r) 105/ 110	GOOD	
10 Ni 2 Cr 1 Mo 8 Co (t)	--	390	--	--	200	180	17	--	VERY GOOD	

NOTES: (q) Anodizing or lithium carbonate treatment available -- Fatigue strength impaired
(r) For 10^6 cycles
(s) 250 grade
(t) Experimental (one heat)

Table 5-2. (Cont'd)

ENDURANCE LIMIT (FATIGUE) X 10^3 (LB/IN^2)	TOUGHNESS NOTCH SENSITIVITY	GALLING: WITH OTHER MARINE MATERIALS	SURFACE CONDITIONING	COEFFICIENT OF THERMAL EXPANSION (LL IN/IN/F$^{\circ}$)	CORROSION RESISTANCE			MACHINABILITY INDEX (AISI B1112 - 100)	WELDABILITY INDEX
					GENERAL IN SEA WATER	CREVICE CORROSION SUSCEPT-IBILITY	STRESS CRACKING SUSCEPT-IBILITY		
--	GOOD	GOOD WHEN SURFACE CONDITIONED	(q)	4.8	EXCELLENT	NONE	NONE V LITTLE (WELD)	--	GOOD(1)
--	FAIR		(q)	5.8	EXCELLENT	NONE	NONE (ANNEALED)	5	GOOD(1)
--	FAIR		(q)	5.8	EXCELLENT	NONE	(DITTO)	5	GOOD(1)
85 (f) (n)	GOOD	See Table 10-5	PAINT	6.3	PITTING-POOR	--	LITTLE	MACHINED IN ANNEALED CONDITION ONLY	GOOD (e)
110	FAIR		PAINT	5.9	PITTING-POOR	--	LITTLE		GOOD
(f) (r) 105/110	GOOD		PAINT	6.4	POOR POOR	--	V LITTLE		GOOD
--	VERY GOOD		--	--	GOOD	--	LITTLE	FAIR-GOOD	GOOD

al (one heat)

PRECEDING PAGE BLANK - NOT FILMED

Table 5-3. Penetrator and Hull Material Compatibility

HULL MATERIAL		PENETRATOR MATERIAL			
Type	Yield Str. X 1000 lb/in	Ti6Al-4V Annealed Sy = 125,000	Inconel 625 Annealed Sy = 60,000	Hastelloy C Heat Treated Sy = 57,000	ARMCO 22-12-5 Annealed Sy = 55,000
HY-80 Steel	80	May polarize - more noble than the steels either way. Weld overlays on hull penetrations required for sealing surface. Monel overlay has been used, but this causes severe galvanic attack of adjacent HY-80. Other material, such as Inconel 625, must be considered for overlay	Expected to polarize under most conditions- more noble than steels. High probability of good results, particularly if 625 is used.	Usually a third choice to titanium or Inconel 625 on the basis of availability. Comparable corrosion resistance but may not polarize as well as Inconel 625 or titanium.	Little data and no experience with this alloy. Should be quite noble but may pit. Corrosion behavior similar to 316 CRES. Inconel 625 should be good overlay.
HY-150 Steel	130				
HY-180 Steel	180				
18% Ni Maraging Steel	190				
HP 9-4-20 Ni-Cobalt Steel Alloys	180				
HP 9-4-25	175				
Ti6Al-4V	125	Expect excellent compatibility - best choice.	Essentially same nobility as titanium. Expect good results.	Same nobility as titanium, however, Inconel 625 is a better choice.	Probably less noble than titanium - but questionable. Not recommended.
G.R.P.	--	The material of the hull penetration will grovern- expect no problem with the G.R.P., per se.			
Aluminum Alloy 7079-T6	60	Hull strongly anodic with respect to penetrators. This would require coating of penetrators to reduce corrosion.			

Table 5-3. (Cont'd)

Material Compatibility

The compatibility of various alloys with respect to each other, in sea water, cannot be expressed adequately in a brief table. The table must, therefore, only serve as a general guide and each application must be considered separately.

For the purpose of this report, it is sufficient to list the most important factors which must be considered to assure compatibility, these are:

a. The area ratios of the two alloys involved.

b. Water flow over the area, and the velocity.

c. Zinc anodes in the area and the potential to add more anodes, if necessary.

d. Geometric crevices - compatibility in general does not assure freedom from crevice corrosion.

e. Polarization and how the specific geometry and environment will affect this polarization.

In general, the penetration alloys listed are more noble than the hull alloys, as manifest by their relative positions on the standard table of Galvanic Series in Sea Water. Since polarization can alter the relative positions of alloys in this series with time, galvanic series relationships should be used only as a starting point. They do, however, point up one significant factor, the anode or sacrificial material will usually be the pressure hull. This suggests that coating of the penetrator with some finish system which would effectively exclude sea water from contacting the penetrator would be efficient. Small holidays in the coating on a penetrator should not present any particular corrosion problems.

With steel pressure hulls, it is common to weld overlay the penetration area with Monel to provide a corrosion resistant seating surface for the penetrator. This practice requires re-evaluation because Monel is strongly cathodic to the hull steel and does not polarize, consequently, a Monel overlay causes severe galvanic corrosion of adjacent hull steel when it is exposed. This condition is usually prevented by coating of the overlay. Work is now underway to evaluate other alloys, such as Inconel 625 for hull penetration overlays. The corrosion behavior and polarization characteristics of 625 should be much more satisfactory than those of Monel. Regardless of which specific alloy is used for an overlay, its compatibility with the hull alloy and with the penetrator alloy must be evaluated.

data was readily available is included in table 5-7 and references 12, 13, 14, 15, and 16. Very little information is available concerning low cycle fatigue of plastics; what has been obtained deals mainly with glass reinforced types (see references 17 and 18). A listing of materials which might find use in sea water application appears as table 5-6. It is based on limited data obtained from a literature search and reported physical and mechanical material properties.

5.6.1 DISCUSSION -- The data obtained from the technical literature search, because of its contradictory nature, clearly indicates the need for thoroughly testing any candidate material under actual service conditions. It should be stressed that nearly all of the data contained in the following tables reflects the properties as measured on test specimens after the immersion periods. The properties so obtained are not necessarily an indicator as to the suitability of the material in sea water. The only fair evaluation of any material for its intended environment is the determination of its critical properties while in its environmental medium. Some recent testing of materials under simulated marine atmospheres (temperature controlled pressurized tanks containing sea water) have shown that results may be quite different than those obtained by testing of the specimen at room conditions after removal from its test environment. The importance of knowing a material's properties under actual service conditions should be given primary consideration in determining its suitability for use (see reference 19).

Nominal values for impact resistance, hardness, tensile and compression strengths, water absorption, temperature limitations, formability and dimensional stability as well as other critical properties of certain generic types of plastics are presented in table 5-4. The data is most useful for comparative purposes. Complete testing must be performed to accurately establish critical properties as the material formulation and processing have a strong influence on the material capabilities.

5.6.2 MATERIAL PERFORMANCE -- Some material properties which serve as indicators as to the suitability of non-metallic compounds in sea water are: tensile strength, dimensional stability, service temperature, dielectric strength, etc. These are relatively familiar terms and require no further explanation. However, there are other critical properties with which one is usually less acquainted and are also effective in revealing a material's suitability in water. Those that are significant and require description are: low cycle fatigue life, creep under hydrostatic pressure, bulk modulus, compressibility, permeability and water absorption under hydrostatic pressure, and hydrolytic effects of sea water. These are defined below.

5.6.2.1 LOW CYCLE FATIGUE LIFE -- This property is intended to signify the life expectancy of a component subject to repeated loading such as that encountered in submersible service. A material that displays excellent steady state stress capability and has characteristically low resistance to loading after a specified number of load applications would reflect poor low cycle fatigue life and would be unsuitable as a non-metallic material candidate.

References 17 and 18 deal with fatigue cycling of epoxy-glass reinforced laminates subject to cracking and consequent reduction of mechanical properties due to long term exposure to repeated loading. The major problem in ensuring high fatigue strength in laminates is preventing water from penetrating and infiltrating the composite along the reinforcing fibers. Data on water penetration indicates that fresh water has greater destructive effects than sea water.

No low cycle fatigue data was found for solid plastics and manufacturers do not normally supply this information.

5.6.2.2 CREEP UNDER HYDROSTATIC PRESSURE -- Creep is a time dependent phenomenon in non-metallic substances and is a measure of a materials resistance to plastic flow or shear. Some plastics may display high resistance to loads applied for short time intervals but have little resistance to smaller long-term loads. Other factors which affect creep strength are temperature and specimen shape. Temperature increase usually decreases creep strength. Much of the data presented was obtained from bar test specimens of circular or rectangular cross sections. Applications of this data would not be strictly correct if the ultimate design components were not of similar geometry and loaded in the same manner. Most materials exhibit a different resistance of tensile creep than bending creep; consequently, the data must correspond to the type of load prevailing in the design application. A convenient method of designing within a material's creep limitations at a specific temperature is to make use of the reduced or apparent elastic modulus. This design constant is obtained through empirical data for a given temperature, load range and type of load.

5.6.2.3 BULK MODULUS -- This quantity is the ratio of change in pressure to fractional change in volume at constant temperature of a material and serves as an indicator as to how much movement (strain) will occur within a material under hydrostatic pressure.

5.6.2.4 COMPRESSIBILITY -- The inverse of bulk modulus, compressibility, can be defined as the fractional volume change per unit increase in pressure. Neither quantity is readily available from manufacturerers; consequently, most of the data found in table 5-7 was calculated from the references given. All polymers (e.g., styrene, polyethylene, epoxy, nylon, etc.) show compressibilities (volume reductions) of 10 to 15 percent up to 11,000 atmospheres and 20 percent at 20,000 atmospheres. This volume reduction is a result of reducing the material's free volume and increases with increasing temperature to 11,000 atmospheres. It has been hypothesized by investigators that the volume changes above 11,000 atmospheres are due to measuring inaccuracies and also possible molecular structure changes in the specimens themselves. The degree of compressibility of cross-linked polymers does not differ from that of linear. The amount of compression (volume change) at any temperature and pressure is not constant but appears to be time dependent.

5.6.2.5 PERMEABILITY AND WATER ABSORPTION UNDER HYDROSTATIC PRESSURE -- Permeability is a measure of the extent to which water can pass through or into a barrier (the material specimen) without physically or chemically affecting it. Large hydrostatic pressure

does not increase permeation. The data on this property (table 5-5) shows that high pressures either cause permeation to decrease in some materials or have no effect at all. Permeability is expressed in percent weight change of test specimen.

5.6.2.6 HYDROLYTIC EFFECTS OF SEA WATER -- This variable is usually expressed qualitatively as it describes chemical reaction of a substance with sea water. In nearly all cases where hydrolysis occurs, it results in deterioration of the material's mechanical properties. It has also been found that fresh water would be a more aggressive agent than sea water where chemical reaction occurs. A good example of this property variable is the reversion which some polyurethanes exhibit when exposed to high humidity at elevated temperature. The hydrolytic reaction which ensues results in the cured material reverting to a liquid state, seriously lacking in the mechanical properties displayed in its solid condition.

5.7 GUIDELINES FOR SELECTING NON-METALLIC MATERIALS FOR SEA WATER SERVICE

Tables 5-4, 5-5, and 5-6 present a concise collection of material properties which should be considered in choosing non-metallics for use in sea water. The information presented, although fairly accurate, is dependent on such a wide range of variables that absolute quantities may not be as significant as the comparison of the quantity among the materials. Due to variations in compounding and processing techniques involved in preparing test specimens, strict adherence to absolute quantities is not advisable. Data for this nature should be obtained from preproduction samples tested in a meaningful and realistic environment.

Table 5-4. Some Deleterious Effects Of Deep Ocean Environment Upon Plastics And Elastomers

MATERIAL	CONDITIONS	REMARKS	REFERENCE
Epoxy laminate - filament wound	111 days in the ocean at 5700 feet.	Approx. 16% and 2% losses in comp. stress and comp. mod.; resp.; 32% loss of interlaminar shear strength	20
Urethane foam - high density (Mgid)	111 days in ocean at 5700 ft.	Up to 18% loss in comp. str. (10% defl.)	
Molded polyurethane (Chem Seal 3503)	2+ years in ocean at 5000 ft.	Color change, 6% wt. loss, slight softening, splitting.	21
Polyethylene - med. dens.	2 years in ocean at 5000 ft.	Severe splitting	
Neoprene (Fairprene M5580)	2 years in ocean at 5000 ft.	Severe cracking, shrinkage and loss in weight and hardness	
Acrylic Polyester laminate Phenolics Epoxy	751 days in ocean at 5640 ft. (36 F)	All of these materials showed significant losses in tensile, compression and flexural strengths.	22

Table 5-4. (Cont'd)

MATERIAL	CONDITION	REMARKS	REFERENCE
Polyurethane (PR 1535 & 1547)	One week in 3% salt water at 120 F and 1000 psig	Up to 54% loss in tensile strength, 4% loss in elong. 30% loss in tear strength and up to 80% loss in electrical resistance	23
Neoprene Polyethylene	18 months in ocean at 5 to 35 ft.	Hardened 14 pts, and 11% wt. loss-cable jacket split longitudinally	24
Silicone (125C, gen. purpose white) Polyvinyl chloride Natural rubber Hypalon Hycar Butyl Polyethylene	10-300 days in water at 50-70 C	All these materials showed significant increases (12-328%) in mutual capacitance after 300 days in water at 50°C	25
Acetal Nylon Phenolic laminate Polycarbonate Teflon Cellulose acetate Polyethylene Acrylic-extruded Polystyrene Polyvinyl chloride Silicone	One year 2370 ft. in ocean from sediment to 3 ft. above sediment	All of these materials were attacked by marine borers to varying degrees under specific conditions	26
Butyl, neoprene, natural rubber, Geon (PVC), Bakelite PVC, polyethylene nylon, teflon, polypropylene, PVC, SBR		These materials were not affected by marine borers and were in excellent condition.	

MATERIAL	HARDNESS[1]	IMPACT[2]	TENSILE[3] PROPERTIES	COMP PROI
Acetal plastics	M 75-90 R 118-120	0.8-1.6	TS 8-11 ksi E 7-75% Mod. 400-1000 ksi	CS 16 10% Mod. ks
Acrylic plastics	M 80-105	0.3-0.5	TS 7-11 ksi E 2-10% Mod 350-500 ksi	CS 1 Mod. k
	R 99-120	0.5-4.5	TS 5-9 ksi E 15-50% Mod. 200-400 ksi	CS 4 Mod k
Acrylonitrile-butadiene-styrene plastics	R 85-109	3-8	TS 5-6.2 ksi E 6-60% Mod. 230-350 ksi	CS Mod k
	M 65-100	1-2.4	TS 8.5-19 ksi E 2.5-3% Mod. 600-1000 ksi	CS Mo 1
Diallyl phthalate	E 61-87 M 108-115	0.3-15	TS 5-60 ksi E - Mod. 600-2200 ksi	CS Mo
Phenolic Plastics	M 124-128	0.2-0.36	TS 7-8 ksi E 1-1.5% Mod. 750-1000 ksi	CS Mo
	E 54-101	0.27-18	TS 5-18 ksi E 0.13-0.5% Mod. 2500-3300 ksi	CS Mo
Phenylene oxide plastics	R 118-120 M 70-94	1.5-2.0	TS 9.6-18 ksi E 4-80% Mod. 380-1330 ksi	CS M 13
Polycarbonate plastics	R 106-120 M 70-95	1.2-17.5	TS 6.5-25 ksi E 0.9-150% Mod. 350-1700 ksi	CS M

CT[2]	TENSILE[3] PROPERTIES	COMPRESSIVE[4] PROPERTIES	FORMABILITY[5]	WATER ABSORPTION AT PRESSURE	DIMENSIONAL STABILITY	BONDABILITY TO ELASTOMER	WATER ABSORPT OR PERME
1.6	TS 8-11 ksi E 7-75% Mod. 400-1000 ksi	CS 16-18 ksi 10% deflection Mod. 450-670 ksi	Moldable (CM, IM, EX) Mach.	1000 psig 74D, RT 4.75% Fresh water 0.29% Pacific Sea water 2500 psig 24 mos	Good - 4 mils/in. after long immersion in water	Difficult. Special surface preparation. Chemlok 220, EC 711, Narmco 3135A, etc.	0.22-0.29% 1.9-3gm/10 24 hrs/mil
-0.5	TS 7-11 ksi E 2-10% Mod 350-500 ksi	CS 12-18 ksi Mod. 370-460 ksi	Moldable (C, CM, IM, EX) mach.	Sea water 24 mos, 0.51% 2500 psig Pacific Ocean	Good	OK, nat. rubber, urethane, acrylics, epoxy	0.3-0.4%
4.5	TS 5-9 ksi E 15-50% Mod. 200-400 ksi	CS 4-14 ksi Mod. 240-370 ksi	--	--	Good	As above	0.2-0.4%
8	TS 5-6.2 ksi E 6-60% Mod. 230-350 ksi	CS 7-9 ksi Mod. 170-200 ksi	Moldable (IM, CM, EX) Mach.	100 psig 74 D RT 1.05% weight gain Fresh water	Good - 0.2-1.7% 24 hrs. 122 F 2000 psi	OK. Modified epoxy adhesive and solvent based cements	0.2-0.45%
2.4	TS 8.5-19 ksi E 2.5-3% Mod. 600-1000 ksi	CS 12-22 ksi Mod 130-180 ksi	Moldable (CM, IM) Mach.	--	Good	OK as above	0.18-0.4%
3-15	TS 5-60 ksi E - Mod. 600-2200 ksi	CS 20-65 ksi Mod. -	Moldable (CM, IM, EX) Mach.	--	Good	OK neoprene, epoxy adhesive	0.12-0.35
2-0.36	TS 7-8 ksi E 1-1.5% Mod. 750-1000 ksi	CS 10-30 ksi Mod. -	Moldable (CM, IM) Mach.	--	Good	OK. Epoxy, rubber and urethane adhesives	0.1-0.2%
27-18	TS 5-18 ksi E 0.13-0.5% Mod. 2500-3300 ksi	CS 20-30 ksi Mod. -	Moldable (CM, IM) Mach.	1.82-3.77% Sea water Pacific 2500 psig 24 mos.	Good	As above	0.10-1.2
.5-2.0	TS 9.6-18 ksi E 4-80%- Mod. 380-1330 ksi	CS 16.5-19.8 ksi Mod. 370-1300 ksi	Moldable (IM, CM) Mach.	--	Good	As above	0.06-0.0
1.2-17.5	TS 6.5-25 ksi E 0.9-150% Mod. 350-1700 ksi	CS 12.5-21 ksi Mod. 345-1500 ksi	Moldable (CM, IM, EX) Mach.	0.33% Pacific sea water, 24 mos. 2500 psig	Good	OK. Polyester, epoxy, and urethane cements	0.07-0. 3-4x10 gm/cm/ in²/Cm

Table 5-5. Nominal Physical Properties for Some Generic Types of Plastics Intended For Electrical Use In Deep Ocean Environment

AL Y	BONDABILITY TO ELASTOMER	WATER[7] ABSORPTION OR PERMEABILITY	USEFUL CONTINUOUS TEMPERATURE	DIELECTRIC[8] STRENGTH	REMARKS
n	Difficult. Special surface preparation. Chemlok 220, EC 711, Narmco 3135A etc.	0.22-0.29% 1.9-3gm/100in.^{2}/ 24 hrs/mil	95 F max.	500V/mil	Nominal properties for acetal homopolymer copolyer and glass filled plastics. Good electrical properties, abrasion resistance and dimensional stability over a wide temperature range. Not easily bonded. Mechanical methods probably best.
	OK, nat. rubber, urethane, acrylics, epoxy	0.3-0.4%	200 F max.	400-550 V/mil	Cast and molded methyl methacrylate. Excellent outdoor weathering and dimensional stability. Easily scratched.
	As above	0.2-0.4%	160-185 F max.	400-500 V/mil	Impact grade acrylics.
	OK. Modified epoxy adhesive and solvent based cements	0.2-0.45%	160-210 F max.	350-550 V/mil	High impact grade. Tough-good impact and structural properties. Can be electro plated which might be helpful in controlling water permeative.
	OK as above	0.18-0.4%	200-230 F	--	20-40% glass filled grades.
	OK neoprene, epoxy adhesive	0.12-0.35%	300-450 F max.	390-450 V/mil	Nominal properties for filled (glass, syn. fiber and mineral) compounds. High moisture, electrical and chemical resistance.
	OK. Epoxy, rubber and urethane adhesives	0.1-0.2%	240-260 F	300-400 V/mil	Nominal properties for unfilled phenol-formaldehyde resin. Good dimensional stability and electrical properties.
	As above	0.10-1.2%	250-550 F	140-400 V/mil	Nominal properties for mica and glass fiber filled phenolics and melamine.
	As above	0.06-0.07%	-275 to 375 F	400-1050 V/mil	Nominal properties for unfilled and filled (20-30% glass) polyphenylene oxide and modified phenylene oxide.
	OK. Polyester, epoxy, and urethane cements	0.07-0.35% 3-4x10^{-8} gm/cm/hr/ in^2/ Cm Hg	220-300 F	350-500 V/MIL	Nominal properties for unfilled and filled (10-40% glass) and ABS polycarbonate plastics.

PRECEDING PAGE BLANK - NOT FILMED

MATERIAL	HARDNESS[1]	IMPACT[2]	TENSILE[3] PROPERTIES	COMPRESSIVE[4] PROPERTIES
Polyester plastics	M 94-70 Barc 1	0.8-22	TS 8-20 ksi E 5-300% Mod.	CS 15-30 ksi Mod. -
Polypropylene plastics	R 30-100	0.5-15	S 2.9-9 ksi E 3-700% Mod. 100-900 ksi	CS 3-8 ksi Mod. 150-300 ksi
Polysulfone plastic	R 120 M 69	1.3	TYS 10 ksi E 50-100% Mod 360 ksi	CYS 14 ksi Mod. 340-370 ksi
Nylon plastic	M 94 E 75	1.2-6	TS 13-35 ksi E 1-10% Mod. 50-180 ksi	CS 13-24 ksi Mod. -
Epoxy plastics	M 55-120	0.2-30	TS 2-30 ksi E 1-70% Mod 1-3040 ksi	CS 1-40 ksi Mod. -

1. Rockwell hardnesses per ASTM D785 unless otherwise noted.
2. Izod impact in ft.-lbs/inch of notch per ASTM D256.
3. Tensile properties - ASTM D638 at 73 F
4. Compression properties - ASTM D695 at 73 F
5. C=castable, CM=compression moldable, IM=injection moldable, EX=extruda machinable
6. Coefficient of linear thermal (-22 F to +86 F) expansion per ASTM D696. T an indication of dimensional stability (thermal).
7. Water absorption (%) per ASTM D570. 24 hrs, 73 F. Water permeability da available. See App. F of Reference (a).
8. Dielectric strength per ASTM D149. Short time method. Volts/mil

Tabular data were obtained from Modern Plastics Encyclopedia 1968-69, Mate Issue and Manufacturers' data.

TENSILE[3] PROPERTIES	COMPRESSIVE[4] PROPERTIES	FORMABILITY[5]	WATER ABSORPTION AT PRESSURE	DIMENSIONAL STABILITY	BONDABILITY TO ELASTOMER	WATER[7] ABSORPTIO OR PERMEABI
TS 8-20 ksi E 5-300% Mod.	CS 15-30 ksi Mod. -	Moldable (C, CM, IM) Mach.	--	Fair to Good depending upon system	OK. Epoxy, rubber and urethane cements	0.02-0.15%
S 2.9-9 ksi E 3-700% Mod. 100-900 ksi	CS 3-8 ksi Mod. 150-300 ksi	Moldable (CM, IM) Mach.	--	Good	Difficult. Special surface treatment. Epoxy or rubber-phenolic cements.	0.01-0.10% 1.4 gms/cm/in^2 sec/cm Hg
TYS 10 ksi E 50-100% Mod 360 ksi	CYS 14 ksi Mod. 340-370 ksi	Moldable (C, CM, IM) Mach.	--	Good	--	0.22%
TS 13-35 ksi E 1-10% Mod. 50-180 ksi	CS 13-24 ksi Mod. -	Moldable (IM) Mach.	0.2-2.0 24 hr Fresh water	Fair to poor depending upon water absorption	Difficult. Neoprene and nitrile cement	0.2-2%
TS 2-30 ksi E 1-70% Mod 1-3040 ksi	CS 1-40 ksi Mod. -	Cast, Moldable (CM, IM) Mach.	1.3% (filament wound) 111 DA45 2500 psi sea water	Fair to good depending upon type epoxy system.	OK. Phenolic-neoprene, epoxy phenolic-nitrile and neoprene cements	0.04-0.27%

less otherwise noted.

ASTM D256.

F

t 73 F

, IM=injection moldable, EX=extrudable, and Mach. =

+86 F) expansion per ASTM D696. This is given as ermal).

4 hrs, 73 F. Water permeability data not readily

ort time method. Volts/mil

lastics Encyclopedia 1968-69, Materials Select.

Table 5-5. (Cont'd)

AL Y	BONDABILITY TO ELASTOMER	WATER[7] ABSORPTION OR PERMEABILITY	USEFUL CONTINUOUS TEMPERATURE	DIELECTRIC[8] STRENGTH	REMARKS
d pon	OK. Epoxy, rubber and urethane cements	0.02-0.15%	250 F	350-400 V/mil	Nominal properties for unfilled, glass filled (17%) and molded sheet polyesters. Properties vary widely with formulation. Generally used with reinforcing fibers.
	Difficult. Special surface treatment. Epoxy or rubber-phenolic cements.	0.01-0.10% 1.4 gms/cm/in^2 sec/cm Hg	320 F	450-660 V/mil	Nominal properties for unmodified, inert filled, glass reinforced, rubber modified and copolymer polypropylenes. Can be electroplated, which might improve other properties.
	--	0.22%	-150 340 F	425 V/mil	Nominal properties. Can be electroplated, which might improve other properties such as permeability, scratch resistance, etc.
r	Difficult. Neoprene and nitrile cement	0.2-2%	400 F max.	400-500 V/mil	Nominal properties for type 6/10 nylon 20-40% glass filled. Water absorption and dimensional stability will depend upon amount of filler.
od upon sys-	OK. Phenolic-neoprene, epoxy phenolic-nitrile and neoprene cements	0.04-0.27%	400 F max.	235-550 V/mil	Nominal properties for cast, molded, filled, and flexibilized, filled and unfilled epoxy resins.

Table 5-6. Approximate Isothermal Bulk Moduli For Some Plastics

MATERIAL	TEMPERATURE	PRESSURE (atm)	APPROXIMATE BULK MODULUS (k_i)	REFERENCE
Acetal	25 C	2000(1)	980,000 psi(2)	12 & 13
Acetal	25	2000	895,000	
Epoxy-DETA	160	2000	785,000	
Epoxy-DEPA	83	2000	1,340,000	
Epoxy-Hardener D	25	2000	505,000	
Epoxy-MPDA	92	2000	1,775,000	
Epoxy-DDSA	23	2000	675,000	
Epoxy-Hardener D	22	2000	865,000	
Nylon 66	23	2000	785,000	
Nylon 66	22	2000	865,000	
Polycarbonate	23	2000	700,000	
Polyethylene	22	2000	795,000	
Polyethylene	27	2000	690,000	
Polymethyl methacrylate	25	2000	1,305,000	
Polystyrene	22	2000	755,000	
Polystyrene	25	2000	805,000	
Teflon (CTFE)	21	2000	840,000	
Polycarbonate	23	--	442,000(3)	Personal Communication,
Polyphenylene Oxide	23	--	514,000	G.E., Pittsfield
Phenolic	23	--	833,000	

(1) 29,400 psi. Pressure at deepest ocean, ≈16,000 psi.

(2) Moduli calculated from curve data in listed references.

(3) Data based upon Poisson's ratios of 0.37, 0.38, and ≈0.30 and tensile moduli of 345,370 and 1000 ksi, respectively for polycarbonate, polyphenylene oxide and phenolic. Personal communications, GE, Pittsfield, Mass.

PRECEDING PAGE BLANK NOT FILMED

Section 5

REFERENCES

1. DSSP Instruction 9020.2, Guidelines for Corrosion Control, PMS-11/201/SH: PM of December 31, 1968.

2. Jerome, R. and J. L. March, Designers Guidelines for Selection and Use of Metallic Materials in Sea Water Applications, Electric Boat division Report of December 8, 1966.

3. Tuthill, A. H. and C. M. Schillmoller, Guidelines for Selection of Marine Materials, International Nickel Co., 1966.

4. Hunt. J.R. and M.D. Bellware, Ocean Engineering Hardware Requires Copper-Nickel Alloys, International Nickel Co.

5. Myers, J.J. Handbook of Ocean and Underwater Engineering, McGraw Hill Book Co., New York, (Section 7, "Corrosion" B. F. Brown, and "Materials for Marine Use," R.C. DeHart.) 1969.

6. Uhlig, H. H. Corrosion Handbook, John Wiley and Sons, Inc., New York, 1948.

7. LaQue, F. L. and H. H. Capson, Corrosion Resistance of Metals and Alloys, Reinhold Publishing Corp., New York, 1963.

8. Brown, B. F. Corrosion in the Marine Environment, MTS 6th Annual Conference, pp. 1225-1231, June 24 - July 1, 1970.

9. Tuthill, A. H. and C. M. Schillmuller, Guidelines for Selection of Marine Materials, The International Nickel Co., New York, 1966.

10. "Corrosion and Corrosion Protection of Metals" MIL-HDBK-721(MR) Military Standardization Handbook, November 1, 1965.

11. Anon. "Marine Materials" Nickel Topics, Vol 23, No. 3 International Nickel Co.

12. Warfield, R.W. The Compressibility of Polymers to 20,000 Atmospheres, USNOL, White Oak, Maryland, ASTIA AD635-121, June 1, 1966.

13. Warfield, R.W. Compressibility of Bulk Polymers, USNOL, White Oak, Md., Polymer Engineering and Science, pp 176-180, April 1966.

14. Warfield, R.W. J.E. Cuevas, and R. Barnat, Single Specimen Determination of Young's and Bulk Moduli, USNOL, White Oak, Silver Spring, Md., Journal of Applied Polymer Science, Vol 12, pp 1147-1149 (1968).

15. Warfield, R.W. Compressibility of Linear Polymers, Journal of Applied Chemistry, Vol 17, September 1967.

16. Warfield, R.W. The Compressibility of Crosslinked Polymers, USNOL, White Oak, Silver Spring, Md., NOLTR64-243, April 1965.

17. Glowacki, A.S. Protective Coatings for Filament-Wound Deep Submergence Vessels, U.S. Rubber Co. Research Center, Wayne, N.J., Final Report, September 1966.

18. Crouch, W. P. Structural Response of Identical Glass-Reinforced Plastic Pressure Hull Models to External Hydrostatic and Short-Term and Long-Term Cyclic Pressure Loadings (An Interim Report), Structural Mechanics Lab, NAVSEC, Report 2560, ASTIA AD829-435, December 1967.

19. Vroom, W.J. and R. F. Westover, Classification of Polymers by Their Response to Hydrostatic Pressures, 27th Annual Technical Conference, Society of Plastics Engineers, pp 191-193, 1969.

20. Laminates and Elastomers Under Deep Submergence Exposure, USN Applied Science Lab, Brooklyn, N.Y., ASTIA AD412-980.

21. Sample Test Exposures to Examine Corrosion and Fouling in the Deep Ocean, TN No. 359, USNUOS, Newport, R.I., ASTIA AD477-273.

22. Lee, H.J. Oceanographic Effects on Plastic Engineering Materials, US Naval Air Engineering Center, Philadelphia, Pa., Report NAEC-AML-2536, ASTIA AD647-054, 1966.

23. Development of Specification for Polyurethane Rubber Used to Encapsulate Submarine Antennas, Report No. 11-8, Rubber Lab, Mare Island, USN, Vallejo, Calif., ASTIA AD441-158, August 11, 1964.

24. A Sample Test Exposure in Shallow Water to Examine Effects of Ocean Environments on Underwater Equipment TM No. 333, USNUOS, Newport, R.I., ASTIA AD450-220, October 1964.

25. Todd, G. F. Cable Jackets and Water Permeability, Collyer Insulated Wire Company, Pawtucket, R.I., AIEE Transaction Paper No. 61-240, February 17, 1961.

26. Deep-Ocean Biodeterioration of Materials, Part III. Three Years at 5300 Ft., Part V - Two Years at 5640 Ft., Part VI - One Year at 2370 Ft., USNCE Lab, Port Hueneme, Calif., ASTIA AD631-078, 642-838, and 651-124, 1966-1967.

PRECEDING PAGE BLANK - NOT FILMED

Section 6

TABLE OF CONTENTS

Section	Title	Page
6.1	Introduction	6-1
6.2	Methods for Control of Quality	6-3
6.3	Penetrator Certification Data	6-7
6.3.1	Certification Design Requirements for Electrical Hull Penetrators	6-8
6.4	Penetrator Test Requirements	6-10
6.5	Connector Test Requirements	6-14
6.5.1	Connector Performance and Test Requirements	6-14
6.6	Harness Test Requirements	6-19
6.6.1	Harness Performance and Test Requirements	6-20
6.7	Penetrator Design Calculations	6-25
6.7.1	Critical Stress Zone Calculations	6-28
6.7.2	Shock Load Calculations	6-33
6.7.3	Deflection Calculations	6-38
6.8	Connector Design Calculations	6-39
6.8.1	Critical Stress Zone Calculations	6-40
6.8.2	Shock Load Calculations	6-42
6.8.3	Deflection Calculations	6-49
6.9	Harness and Penetrator Installation Guidelines	6-50
6.9.1	Hull Penetrator Installation	6-50
6.9.2	Outboard Harness Installation	6-51
6.9.3	Inspection and Handling O-Rings	6-53
6.9.4	Special Precautions for Examining Outboard Harness and Hull Penetrators	6-57
6.10	Functional Failure Modes and Effects Analysis	6-58

Table 5-6. Approximate Isothermal Bulk Moduli For Some Plastics

MATERIAL	TEMPERATURE	PRESSURE (atm)	APPROXIMATE BULK MODULUS (k_i)	REFERENCE
Acetal	25 C	2000(1)	980,000 psi(2)	12 & 13
Acetal	25	2000	895,000	
Epoxy-DETA	160	2000	785,000	
Epoxy-DEPA	83	2000	1,340,000	
Epoxy-Hardener D	25	2000	505,000	
Epoxy-MPDA	92	2000	1,775,000	
Epoxy-DDSA	23	2000	675,000	
Epoxy-Hardener D	22	2000	865,000	
Nylon 66	23	2000	785,000	
Nylon 66	22	2000	865,000	
Polycarbonate	23	2000	700,000	
Polyethylene	22	2000	795,000	
Polyethylene	27	2000	690,000	
Polymethyl methacrylate	25	2000	1,305,000	
Polystyrene	22	2000	755,000	
Polystyrene	25	2000	805,000	
Teflon (CTFE)	21	2000	840,000	
Polycarbonate	23	--	442,000(3)	Personal Communication, G.E., Pittsfield
Polyphenylene Oxide	23	--	514,000	
Phenolic	23	--	833,000	

(1) 29,400 psi. Pressure at deepest ocean, ≈16,000 psi.

(2) Moduli calculated from curve data in listed references.

(3) Data based upon Poisson's ratios of 0.37, 0.38, and ≈0.30 and tensile moduli of 345,370 and 1000 ksi, respectively for polycarbonate, polyphenylene oxide and phenolic. Personal communications, GE, Pittsfield, Mass.

PRECEDING PAGE BLANK NOT FILMED

Section 6

RELIABILITY AND QUALITY CONTROL CONSIDERATIONS

6.1 INTRODUCTION

The following definitions apply to this section of the Handbook:

RELIABILITY of an item of equipment is the probability that the equipment will operate satisfactorily for at least a given interval of time (or number of cycles) when used under specified operating conditions and maintenance programs.

MAINTAINABILITY is the probability that a failed item of equipment will be restored to operating conditions in not more than a specified interval of down time when maintenance and administrative conditions are stated.

QUALITY CONTROL is the set of disciplines and techniques which ensures that the manufacturered item conforms to the design specifications.

The most urgent problem associated with the failure of components subjected to deep submergence pressures on vehicles has been the control of quality (see reference 1). This control of quality has been absent during one or all of the various stages of manufacture, assembly, test, handling, shipping, and installation. Certainly poor component design has been responsible for many system failures in past years; however, many failures have been rightfully attributed to inadequate manufacturing and installation quality control. The following paragraphs in this section are addressed to quality control and reliability considerations in connector and penetrator design.

The following is a listing of problem areas that have been identified in past years as failure modes for connectors, harnesses and penetrators:

a. Inadequate bond of the molded connector boot to the cable.
b. Inadequate bond of the molded connector boot to the connector shell.
c. Voids in the mold boot of the connector.
d. Damaged cable jackets in the mold cable clamp area, especially in neoprene molded boots where the cable is held in the mold.
e. Cold soldered joints at the conductor-to-socket connection.
f. Damaged springs in the socket contacts.
g. Damaged coupling ring or receptacle threads.
h. Improper mating of the plug to the receptacle, thus not allowing the proper interface seal to be made.
i. Chipped or cracked contact insulator materials.
j. Bent pin contacts.
k. Porous or cracked receptacle-to-component weld.

l. Damaged or scratched O-ring seal surfaces.

m. Damaged or improperly molded O-rings.

n. Improperly positioned or sized polarizing key.

o. Over sized (too thick) pin contact gasket.

p. Improperly bonded pin contact gasket.

q. Conductor fatigue failure inside the connector.

r. Conductor kinking and breaking in the cable harness.

s. Out-of-spec plug and receptacle dimensions.

t. Conductor breakage due to high impact loads on the cable or a sharp cable bend radius.

u. Short circuit due to foreign materials at the plug-to-receptacle interface.

v. Swelling of seal and gasket materials due to the use of improper cleaning solvents.

w. Dielectric withstanding voltage breakdown of contact insulations.

x. Short circuits at the conductor-to-connector termination due to foreign materials in potting compounds.

y. Loss of plug-to-receptacle seals due to foreign particles on the seal surfaces.

z. Conductor breakage due to axial tensile loads on the harness.

aa. Dislodged keys in the receptacles resulting in loss of polarization.

ab. Inadequate spacing between conductor terminations (movement during molding operation) in plug or receptacle which leads to electrical failure when cable seal is flexed or subjected to sea pressure.

ac. Relaxation of the springs on the socket contacts with use to the point where contact surface becomes critical and leads to eventual electrical burn-out.

ad. Electrical failure resulting from flooding into conductor termination area when female portion is exposed to sea pressure as a result of no protection with pressure proof covers.

ae. Corrosion of contact surfaces resulting in a critical potential drop across the contact surfaces, resulting in eventual burn-out.

af. Failures resulting from general lack of quality control during manufacture which were undetected due to inadequate testing and inspection following fabrication.

ag. Electrical degradation of connectors resulting from stress cracks developing in plastic bodied connectors during manufacture or in service.

ah. Lack of adequate plug-receptacle polarization in basic connector design which leads to pin-socket contact damage and eventual failure of the connector.

ai. Failure of threads in plastic bodied connectors due to in-service handling.

aj. Plastic plug coupling ring failure due to impact forces in service handling.

ak. Excessive molding flash in rubber connectors in the plug-to-receptacle seal areas resulting in seal failure.

al. Variation in durometer hardness and/or fit between molded rubber plug and receptacles, resulting in seal failure.

am. Seal failure of all molded rubber connectors following mating and unmating in arctic conditions.

an. Pin contact damage at installation or in service due to inadequate protection provided by the receptacle shell.

ao. Socket contacts improperly positioned in plug insulator, preventing proper electrical contact with the pin contact.

ap. Wear through of the cable jacket due to improper support on the vehicle resulting in flooding of the harness.

aq. Improper crimping of the contact to the conductor resulting in an eventual open circuit.

ar. Improper termination of braided shields resulting in braid ends piercing conductor insulation.

as. Plug-to-receptacle seal failure due to use of improperly sized O-rings.

6.2 METHODS FOR CONTROL OF QUALITY

The control of quality (assuming a properly designed component is to be manufactured and installed) can be invoked in the following manner:

a. Control and identification, stocking, issuance of all material received in plant as well as verification of all material received.

b. Provide and maintain a description of procedures for control of quality.

c. Maintain a procedure to assure that the latest applicable drawing, technical requirement and contract change information will be available at the time of inspection.

d. Maintain calibrated gages and other measuring and testing devices necessary to assure that components conform to specification requirements.

e. Establish and maintain inspection at appropriately located points in the manufacturing process to assure continuous control of quality.

f. Establish and maintain packaging devices for properly handling and adequately protecting the components in-plant.

g. Inspect and test the completed components.

h. Establish and maintain a system for identifying, serializing and certifying completed components.

i. Provide adequate procedures and instruction for control of stored supplies and finished components.

j. Provide procedures for protecting components during transit.

k. Maintain adequate quality control records throughout all stages of contact performance of inspections and tests including checks to assure accuracy of inspection and testing equipment and other control media.

l. Establish and maintain a failure reporting and analysis program.

m. Establish quality control procedures for installation and maintenance of components.

n. Ensure that people working the job are familiar with procedures and control and have manuals available for reference.

The above quality control requirements MUST be written into the documents which provide for the fabrication and installation of the subject connector, cables, harnesses, and penetrators. The following documents are required to assure quality:

a. Cable specification
b. Connector specification
c. Penetrator specification
d. Harness specification
e. Harness wiring and molding manual
f. Harness and penetrator installation and maintenance manual

With close adherence to the above procedures, quality can be controlled and assured in connectors, harnesses, and penetrators.

Design verification tests for DSV electrical connectors and penetrators are required to ascertain that the newly developed component hardware will meet the physical, environmental and electrical requirements imposed by service conditions. It would be most desirable to conduct all of these component tests under actual environmental conditions and in a given operational sequence time frame. For obvious reasons, this is not practical. As a result, alternate test methods have been devised over the years which include the use of sequential testing techniques. These techniques which relate to the particular service environment are widely used to verify and qualify new connector designs.

In the sequence method of testing, the component is initially examined to be sure that it was manufactured in accordance with the assembly and detail drawings. This initial product examination allows the technician to verify that component deterioration or failure (mechanical or electrical) if any, which occurs during the test program is a result of the test program and not an initial component condition. For these reasons, insulation resistance, withstanding voltage, and contact resistance determinations are made at the outset of the test program. These tests are normally repeated at the conclusion of the program to note changes that may have occurred as a result of the mechanical and environmental tests conducted during the test sequence.

The insulation resistance test is conducted to determine quantitatively the condition of each contact seal or insulator prior to exposure to other types of tests, and is used as a means of detecting any subsequent electrical deterioration resulting from these other tests. A minimum insulation resistance of 5000 megohms should be maintained throughout the test schedule. This allows some margin for deterioration after installation in the actual operating environment. 5000 megohms is specified in the DSV test procedure.

The dielectric withstanding voltage test is also specified at the beginning of the test sequence to ascertain that the insulating component has been properly fabricated. The test is repeated after all physical testing has been completed. The reason being, to detect any insulator flaw that could develop as a result of physical testing. For these designs, a test voltage in excess of three times the service voltage rating is recommended. For instance, a 1,000 volt (ac-rms) is used for the 300 volt connectors, and a 1,900 test voltage is recommended for the 600 volt service-rated power type connectors.

The contact resistance test is conducted to provide the systems engineer with detailed performance data on the connectors being tested. This gives the engineer an accurate indication of the voltage drop incurred across the mating pin and socket contacts. Also, the contact resistance test is normally run at the termination of any test sequence that includes exposure of the contacts to an environment that could result in significant oxidation. This would include salt spray and long-term open face salt water hydrostatic tests.

A connector durability test, which involves mating and unmating counterpart connectors a number of times, serves as a conditioning test prior to performing the physical and environmental test sequences. The test also checks the adequacy of the coupling mechanism in withstanding the mating cycles it will see during its service life. Component wear and galling characteristics of the threads can be checked during this test. The durability test recommended for deep submergence connectors is 100 mating cycles.

When the components have been visually examined, electrically checked and conditioned, they are subjected to simulated service environment tests, including hydrostatic pressure (static), thermal shock, vibration, high impact shock, and hydrostatic pressure cycling.

A hydrostatic pressure test is recommended to check the effectiveness of the seals at the:

a. Plug-receptacle
b. Receptacle-component, and
c. Cable-connector interface

The connector and penetrator envelopes are also checked for their ability to withstand the hydrostatic pressures. Unless the components are pressure compensated designs, the connectors and penetrators can be classified as pressure vessels and should be externally hydrostatically pressure tested to verify design calculations. The test pressure increments selected for a static test should simulate the entire range of operating depths with a maximum test pressure of one and one-half times the pressure at maximum operating depth. The 1.5 pressure factor provides a reasonable safety factor for meaningful proof testing. A sufficient number of pressure increments should be employed between minimum and maximum pressure to ensure safety and provide specific data in case of failure. It is particularly important that the component be cycled several times from 0 psi to a minimum pressure to confirm seal function. This is particularly true for pressure actuated gaskets such as O-rings. This demonstrates that minute leakage will not occur as the gasket moves into optimum sealing position. The hold time at pressure for each increment should be sufficient for the gasket to reach an equilibrium condition; five minutes is normally adequate. Maximum pressure should be held for 24 hours in order to ensure that the test item is completely leakproof.

The purpose of a hydrostatic pressure cyling test is to simulate an operational pressure profile over an extended period of time. Ideally, the rate of pressure buildup and pressure decay in each cycle should approximate operational rates. Lack of test equipment to accomplish this plus the unrealistic time that would be required for the recommended 2000 cycles preclude this approach.

As a result, the principal requirement is a pressure change rate that will not be so rapid as to create unrealistic shock stresses on the equipment being tested. Equipment being tested should be electrically energized so that continuity can be continuously monitored throughout the test at the various levels of pressure. In this way, time of failure can be pinpointed. High and low pressure hold times must be sufficient for the sealing gasket to reach an equilibrium condition. Periodically (every 50 - 100 cycles) the pressure should be held at the high and low levels to allow for complete recovery of electrical conductors to a steady state relative position. At this time, the equipment under test should be de-energized and a continuity and insulation resistance test made. This will show up any malfunction caused by the cycling pressure up to that time.

Thermal shock tests are conducted next to assure that the materials of construction can withstand the thermal shock conditions that the components may see in service. Service thermal shock could include arctic surface conditions (to -65 F) to water temperatures of 30 F. The high temperature cannot be considered extreme or pose material problems. However, the low temperature can and does pose material problems. Elastomeric materials must remain flexible under these conditions. Cable and cable boot materials must not crack when flexed, and O-rings must maintain their inherent squeeze capability. The thermal shock test can be most important when considereing the use of all plastic or all elastomeric type construction connectors.

Vibration on DSVs is not considered severe. Possibly the greatest vibrational forces acting on a vehicle are during air or surface transportation conditions. Nevertheless, vibration is a fact of life on DSVs and therefore must be tested to assure the uninterrupted operation of the electrical circuitry. Also, the vibration test checks the ability of all fasteners to remain locked in their desired position during the test. The components are checked for interruption of circuitry in excess of 10 milliseconds during the test. Also, the component is visually examined following the test for broken or loose parts.

High-impact shock tests are conducted to determine the ability of the components to withstand shock of the same severity as that produced by collision impacts. Their collision impact could occur during transportation or handling of the vehicle or during service operations. In this test, we are interested in maintaining the uninterrupted electrical circuitry during high impact shock. Also, the physical integrity of the penetrator and connector must be maintained. The components must remain intact and in place in an undamaged condition as a result of the specified impact shock.

In addition to the sequential test schedule that has been described, a series of isolated area design verification tests is highly desirable. These additional measurements and determinations complete the verification of the design. These would include the following supplementary tests and measurements:

A connector current rating determination is most useful to the system designer. This rating must be extablished using a specific set of environmental condititions and related to a specific cable and terminating technique to be meaningful. The determining criteria for this measurement would

be a temperature rise consistent with good material and system performance. Where identical installation conditions do not apply, the system designer would at least have some basis to which he could relate his particular requirement.

Current rating established in this manner for a connector must be adjusted downward where the particular application requires increased conductor bundling; packaging causes a higher steady state temperature within the connector, or the ambient operating temperature is expected to be significantly higher than the temperature standard under which it was originally rated.

It is recommended that contact resistance measurements be taken after long-term exposure of the contacts to ordinary shelf life environment, and exposure to salt water for a length of time that they would reasonably be exposed in application. This procedure will determine the adequacy of contact plating or, in the case of materials such as molybdenum, if plating is required.

Individual gasket seal tests are recommended where a series of seals exist as part of a primary and secondary sea water pressure barrier or one is redundant to the other. This is essential to prove that the redundant seal or seals are functional and properly designed.

The design contour of the cable-to-plug seal should be verified by multiple flexing over a minimum bend radius mandrel.

This will verify molding procedures (seal), adequacy of the cable strain relief, and effect on the conductor termination within the plug.

Strain gage measurements taken in the area of conductor termination within the molded plug to cable seal during life test hydrostatic pressure cycling can be used to detect damaging conductor displacement.

Fault current tests should be run on mated connectors and hull penetrators to determine if system pressure integrity could be affected by forces generated by a fault current of a time duration that could be anticipated with normal system current limiting or fusing devices. The test fault current is selected on the basis of potential current available from the as-installed system power source reduced by the total impedance in the circuitry. Elevated temperature associated with a fault current should not affect the operational qualities of materials used in fabricating the component.

Plug coupling nut torque requirements should be made for each thread size. This will ensure that O-ring seals are properly compressed without over stressing the threads, resulting in the associated problems of galling.

6.3 PENETRATOR CERTIFICATION DATA

Unquestionably, one of the most important design elements of Deep Submersible Vehicles are hull penetrators. These include viewports, personnel hatches, hydraulic and pneumatic piping penetrators and electrical penetrators.

As defined in reference 2, certification is "the procedure including application, review, survey and approval of a submersible". With regard to electrical hull penetrators, we are concerned with

the penetrator design and material certification of these components prior to their use on submersibles. At present, at least four documents have been prepared to provide guidelines for the design and certification of submersibles. These are noted in references 2 through 5.

These manuals have been written in the past three years to provide guidelines for overall vehicle design. In the area of electrical penetrator design and certification, these guidelines should be updated to include the items noted in table 6-1. The following is a discussion of the items noted in table 6-1.

Table 6-1. Recommended Certification Requirements for Electrical Hull Penetrators for Submersibles

a. Design requirements and guidelines
b. Failure modes and effects analysis
c. Design calculations
d. Materials selection evaluation
e. Assembly and detail drawings - penetrator and hull insert
f. Qualification test procedures
g. Production test procedures
h. Handling procedures
i. Installation procedures
j. Maintenance procedures
k. Penetrator material verifications
l. Penetrator seal material verification
m. Penetrator installation verification
n. Penetrator production test data verification
o. Periodic penetrator inspection review

The following breakdown describes the certification requirements for electrical hull penetrators in detail.

6.3.1 Certification Design Requirements for Electrical Hull Penetrators should include the following:

a. Vehicle operating depth
b. Vehicle test pressure
c. Electrical hull penetrator test pressure
d. Vibration
e. Physical shock
f. Amperage
g. Voltage
h. Frequency
i. Temperature
j. Vehicle hull and insert materials
k. Hull penetrator space limitations

6.3.1.1 Design guidelines for penetrators should include the following:

a. Electrical conductors passing through the pressure hull should be provided with primary and secondary conductor seals.
b. The penetrator should be sealed to the pressure hull or insert with primary and secondary seals.
c. All openings (penetrators) into the penetrator body such as covers or receptacles, should be fitted with primary and secondary seals.
d. Penetrators must be fabricated from acceptable corrosion resistant materials and must be compatible with pressure hull and insert materials.
e. The electrical/electronic systems which use electrical penetrators must provide fault current protection to the penetrators.
f. An electrical/electronic circuit check or test point should be located directly inboard of the electrical hull penetrator.
g. The penetrator must be capable of withstanding 2000 hydrostatic pressure test cycles at the penetrator operating depths.

6.3.1.2 A failure mode and effects analysis (FMEA) should be provided for the penetrator as part of the certification package. The FMEA which has been prepared in this section of the Handbook will provide an adequate guideline for penetrators of the future, regardless of the varied designs which may be used in future years.

6.3.1.3 Detail design calculations as a result of hydrostatic pressure loading must be provided with each certification package. An example of the calculations required is offered in this section of the Handbook.

6.3.1.4 A material's selection dissertation should accompany each certification package. This analysis should verify that corrosion resistant materials are used throughout the detail design and that the materials are galvanically compatible. Reports, documents and tests should be issued to show the material's design adequacy. The Bibliography section of this report lists a number of excellent reports in this area.

6.3.1.5 The availability of as built penetrator and hull insert assembly and detail drawings is probably the major key to a certified penetrator design. These drawings list materials of construction and intimate details of design which allow the certification to be made. No certification should be attempted without detail drawings. The certification approval document should identify the drawing number, the latest revision, and the date of issue. Subsequent changes to these drawings should require another brief certification review. A General Note on the penetrator assembly drawing should be included to flag this requirement.

6.3.1.6 Penetrator qualification test procedures are discussed in greater detail in this section of the report. These should be followed.

It will be noted that corrosion resistance is absent from this listing. The MIL-STD-202 test, Method 101B is strictly a comparative type material and coating test, and is applicable here. Corrosion resistance can be obtained through a proper material selection program. The effectiveness of the materials selection can be judged with the annual penetrator inspection review.

6.3.1.7 Each electrical penetrator installed on the vehicle must have been subjected to production tests. These tests are included in this section of the Handbook. Documentation should be available for review at the shipbuilder's plant to verify that these tests have been conducted on each penetrator installed. Each penetrator must be serialized in order that proper documentation procedures can be maintained throughout the fabricating, test, installation and use cycle of the component.

6.3.1.8, 9, & 10 Penetrator handling, installation and maintenance procedures should be provided to assure that the shipbuilder and vehicle user and maintainer will properly handle and use the penetrators. It is felt that these procedures can best be detailed in a Vehicle Maintenance Manual. These manuals are always provided to the vehicle purchaser to cover all systems and hardware on the ship. The electrical penetrators should be no exception. This section of the Handbook provides guidelines for handling, installation and maintenance.

6.3.1.11 & 12 Verification of materials of construction for the penetrator components and seal materials should be available at the shipbuilder's plant at all times. The verification forms should accompany the certification package.

6.3.1.13 Verification should also be provided to ensure that penetrators have been installed in accordance with established procedures. The installed verification forms should be detailed in the Vehicle Maintenance Manual. The procedure should require that two personnel initial the installation document.

6.3.1.14 The penetrator manufacturer should also provide verification that the penetrators have been fabricated in accordance with the procedures established and delineated in the penetrator assembly and detail drawings. This verification can be in the form of initiated manufacturer's process control sheets. This data should form a part of the certification package.

6.3.1.15 Periodic (annual) penetrator inspection is felt to be necessary. The penetrators should be fully inspected for any evidence of corrosion. At least 20 percent of the installed penetrators should be removed for inspection of the gasket materials. This inspection is necessary to assure that the corrosion resistance of the material used in the penetrator design is truly corrosion resistant in this application.

6.4 PENETRATOR TEST REQUIREMENTS

Three series of tests are most important in the design and production of DSV electrical penetrators. These are:

a. Design verification
b. Preproduction qualification
c. Production (quality assurance)

Design verification tests are conducted to prove the adequacy of the design for the intended use. These tests are rather extensive but justified in light of the critical nature of the components being tested.

Preproduction qualification tests are conducted to show evidence of the fabricator's ability to manufacture the penetrator components. These tests allow the fabricator to be placed on the Qualified Products List (QPL) for the applicable penetrator specification.

Production or quality assurance tests are conducted in fabricator's plant at time of manufacture to assure the quality of the products prior to shipment to the customer.

All of the above test programs are necessary to assure the design and manufacture of reliable components.

Design verification testing of the penetrator components should follow the basic test program outlined in table 6-2. Additional testing which could be conducted in the design and development program should cover the following areas:

a. Torque values for all threaded assemblies should be established by actual tests.
b. A series of impact tests should be conducted on the shallow depth (0 to 2000 feet) penetrator with the molded plastic resin shell to determine the degree of shock it can tolerate, and the location of an intended predetermined shear plane that would be located outboard of the primary header water dam.
c. The pressure compensated penetrator junction box component tests should include tests of diaphragm fastening methods; tests to determine diaphragm flexing requirements and tests to determine the degree of gas inclusion that could be tolerated in the compensating fluid.
d. A power rating should be established for each type of penetrator depending on electrical contact size. This rating should be determined under a specific set of environmental test conditions more severe than the ocean environment. This rating, affords the user a method of relating the penetrator to his application requirements.
e. Prior to conducting the sequential tests of table 6-2, each primary and secondary seal should be subjected to a series of hydrostatic pressure cycles to determine their effectiveness at both high and low pressures.

Preproduction qualification tests should follow the basic test program outlined in table 6-3. It will be noted that the sequential tests are diminished in number when compared to the design verification tests. Once the design is verified, the main concern of the user is to verify that the fabricator can work with the materials required to produce a satisfactory product.

The Production or Quality Assurance tests should be conducted as outlined in table 6-4. These tests should be conducted on each completed assembly prior to shipment to the customer.

The tests noted in tables 6-2, 6-3, and 6-4 are discussed in further detail in this section. The following section provides the test procedures for connectors as well as the requirements for same.

Table 6-2. Design Verification Sequence Testing of Penetrators

TEST NO.	TEST	*CONTROL TEST	UNMATED PENETRATOR	MATED PENETRATOR
1	Examination of Product	--	X	X
2	Insulation Resistance	--	X	X
3	Continuity	--	X	X
4	Circuit Resistance	--	X	--
5	Temperature Rise ($^{100\%}_{125\%}$ of rated current)	--	--	X
6	Withstanding Voltage	2-3	X	X
7	Hydrostatic Pressure-Static	2-3	X	X
8	Thermal Shock	2-3	--	X
9	Vibration	2-3	--	X
10	Mechanical Shock	2-3	--	X
11	Hydrostatic Pressure-Static	--	--	X
12	Withstanding Voltage	--	--	X
13	Insulation Resistance	--	--	X
14	Examination of Product	--	--	X
15	Short Circuit Fault Current (Dry)	--	--	X
16	Hydrostatic Pressure-Static	--	--	X
17	Insulation Resistance	--	X	X
18	Continuity	--	X	X
19	Short Circuit Fault Current (as created by flooded condition)	--	X	X
20	Continuity	--	X	X
21	Hydrostatic Pressure-Static	--	X	X
22	Insulation Resistance	--	X	X

*Value as specified in detail requirement paragraphs.

Table 6-3. Preproduction Qualification Test Sequence-Penetrators

TEST NO.	TEST	*CONTROL TEST	UNMATED PENETRATOR	MATED PENETRATOR
1	Examination of Product	--	X	X
2	Insulation Resistance	--	X	X
3	Continuity	--	X	X
4	Contact Resistance	--	(each mated pair of contacts)	
5	Withstanding Voltage	2-3	(Headers only)	X
6	Hydrostatic Pressure-Static	2-3	X	X
7	Thermal Shock	2-3	X	X
8	Withstanding Voltage	--	X	X
9	Insulation Resistance	--	X	X
10	Examination of Product	--	X	X

*Value as specified in details requirement paragraphs

Table 6-4. Quality Conformance Test Sequence - Penetrators

TEST NO.	TEST	*CONTROL TEST	UNMATED PENETRATOR	MATED PENETRATOR
1	Examination of Product	--	X	X
2	Insulation Resistance	--	X	X
3	Continuity	--	--	X
4	Withstanding Voltage	2-3	X	X
5	Hydrostatic Pressure	2-3	X	X
6	Examination of Product	--	X	X

*Value as specified in detail requirement paragraphs

6.5 CONNECTOR TEST REQUIREMENTS

Three series of tests are also very important in the design and production of DSV electrical connectors. They are:

a. Design verification
b. Preproduction qualification
c. Production (quality assurance)

Design verification tests prove the adequacy of the design. These tests are extensive but justified in view of the critical nature of the components being tested.

Preproduction tests show evidence of the manufacturer's ability to fabricate the connector components. These tests allow the fabricator to be placed on the Qualified Products List (QPL) of the applicable connector specification.

All of the above test programs are necessary to assure the reliable design and manufacture of connectors.

Design verification testing of the connector components should follow the basic test program outlined in table 6-5.

Preproduction qualification tests should follow the basic test program outlined in table 6-6. These sequential tests are diminished in number when compared to design verification tests. Once a design is verified, the main concern of the user is to verify that the fabricator can work with the materials specified to produce a satisfactory product.

The production tests should be conducted as outlined in table 6-7. These tests should be run on each completed connector assembly prior to shipment to the customer.

6.5.1 CONNECTOR PERFORMANCE AND TEST REQUIREMENTS -- The following test and performance requirements should be utilized to determine the adequacy of any connector and penetrator used in underwater service.

6.5.1.1 INSULATION RESISTANCE -- Connectors should be insulation-resistance tested in accordance with Method 3003 of MIL-STD-1344. The resistance should be measured between all adjacent pairs of contacts and between the metal shell and each contact. The insulation resistance should be greater than 5000 megohms.

6.5.1.2 CONTINUITY -- All mated connectors and wired contacts should be checked for continuity with a standard circuit tester. There should be no evidence of open circuits as a result of this test.

6.5.1.3 CONTACT RESISTANCE -- The contact resistance should be measured in accordance with the contact resistance test of MIL-STD-1344. The potential drop should not be greater than that determined to be adequate during the design program.

Table 6-5. Design Verification Sequence Testing of Connectors

TEST NO.	EXAMINATION OR TEST	*CONTROL TEST	PLUG	RECEPTACLE	MATED WIRED CONNECTOR
1	Examination of Product	--	X	X	X
2	Insulation Resistance	--	X	X	X
3	Continuity	--	--	--	X
4	Contact Resistance	--	X	X	--
5	Withstanding Voltage	2/3	X	X	X
6	Durability	--	-	-	X
7	Hydrostatic Pressure-Static	2/3	X	X	X
8	Thermal Shock	2/3	X	X	X
9	Vibration	--			X
10	Shock	--			X
11	Hydrostatic Pressure-Cycling	--	X	X	X
12	Withstanding Voltage	--			X
13	Insulation Resistance	--	X	X	X
14	Examination of Product	--	X	X	X

*Value is specified in detail requirement paragraphs.

Table 6-6. Preproduction Qualification Test Sequence-Connectors

TEST NO.	EXAMINATION OR TEST	*CONTROL TEST	PLUG	RECEPTABLE	MATED WIRED CONNECTOR
1	Examination of Product	--	X	X	X
2	Insulation Resistance	--	X	X	X
3	Continuity	--	--	--	X
4	Contact Resistance	--	X	X	--
5	Withstanding Voltage	2-3	X	X	X
6	Hydrostatic Pressure-Static	2-3	X	X	-- X
7	Thermal Shock	2-3	X	X	X
8	Withstanding Voltage	--			X
9	Insulation Resistance	--	X	X	X
10	Examination of Product	--	X	X	X

*Value as specified in detail requirement paragraphs.

Table 6-7. Quality Conformance Test Sequence - Connectors and Accessories

TEST NO.	EXAMINATION OR TEST	*CONTROL TEST	PLUG	RECEPTABLE	PRESSURE PROOF COVERS
1	Examination of Product	--	X	X	X
2	Insulation Resistance	--	X	X	
3	Withstanding Voltage		X	X	
4	Hydrostatic Pressure-Static	2-3	X	X	X
5	Insulation Resistance	--	X	X	
6	Examination of Product	--	X	X	X

*Value as specified in requirement paragraphs.

6.5.1.4 DIELECTRIC WITHSTANDING VOLTAGE - Mated and unmated connectors should be tested in accordance with Method 3001 of MIL STD-1344. The applicable test voltage (1,000 volts for the size 20 and 16 contacts, and 1900 volts for the size 12, 8, 4, 0 and 0000 contacts) should be applied between all adjacent contacts and between all contacts and the metal shell.

6.5.1.5 DURABILITY -- Counterpart connectors should be mated and unmated 100 times at a rate of 50 ± 25 cycles per hour with the plug coupling rings operated in a manner to simulate actual service. Counterpart connectors should show no damage detrimental to the operation of the connector as a result of the test.

6.5.1.6 HYDROSTATIC PRESSURE-STATIC -- The unmated plugs and receptacles and the mated connector assemblies should be subjected to a static hydrostatic pressure test. The test assemblies should be mounted to the internal side of a pressure vessel cover using the mounting method shown on the applicable specification sheet. For the unmated connector tests, the face of the web section should be exposed to a test pressure equivalent one and one-half times the connector operating pressure. The connectors should be tested in clean tap water. For the mated connector and pressure proof cover tests, the plug should be mated to the receptacle or the pressure proof cover to the plug or receptacle with the tools specified in the specification and held with the normal locking device. The connector should be wired in accordance with the applicable specification. Figure 6-1 is an example. The wiring and molding procedures as prescribed in the applicable harness specification should be used to wire and mold the cable to the plug. The cable should be end sealed using similar procedures prescribed. The assembly should be tested one and one-half times the operating pressure of the connector.

6.5.1.7 THERMAL SHOCK -- Plugs, receptacles, pressure proof covers, and connectors should be subjected to the thermal shock tests specified in Method 1003 or MIL-STD-1344. The thermal shock test conditions noted in table 6-8 should be used. No damage detrimental to the operation of the connector should be evident as a result of this test.

Table 6-8. Thermal Shock Test Conditions

STEP	TEMPERATURE F	TIME
1	-65 +0 -9	1/2 hr/lb
2	+68 ±5	--
3	+165 +9 -0	1/2 hr/lb
4	+68 ±5	--

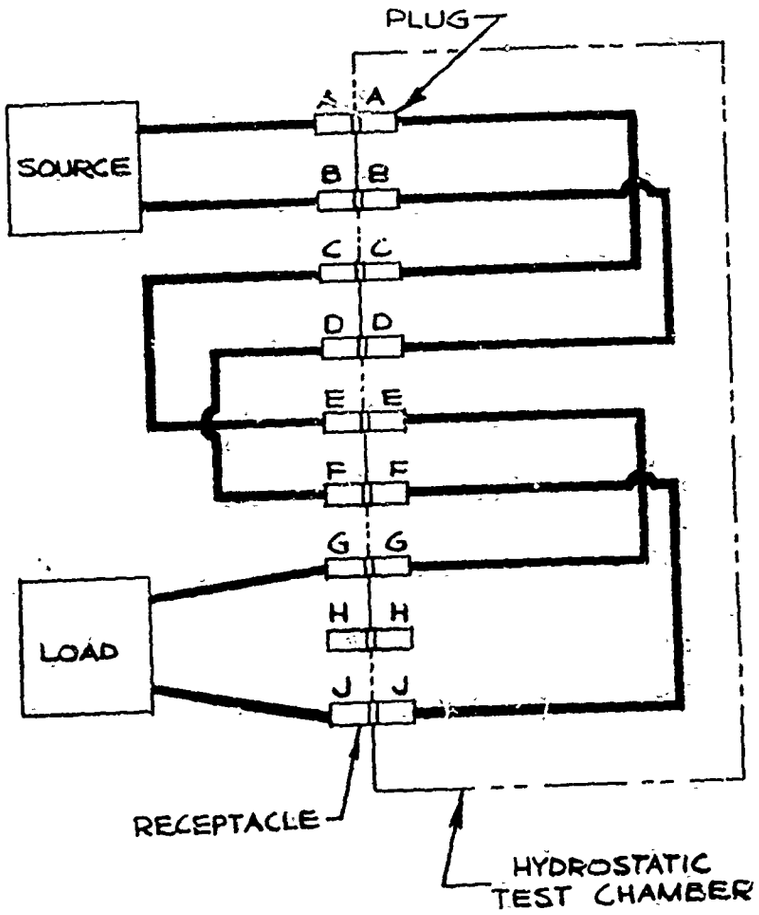

Figure 6-1. Mated Connector Test Circuit

6.5.1.8 VIBRATION -- Mated connectors and mated pressure proof covers should be vibrated in accordance with Method 2005 of MIL-STD-1344. Mated contacts should be wired in series as noted in the applicable specification (see figure 6-1) and be connected with a suitable testing circuit. Any voltage or current within the connector rating should be applied throughout the vibration test. The mated connector or mated pressure proof cover should be held together by the normal locking device. Cables should be supported on a stationary frame not closer than eight inches from the connector. Mated connectors should not be damaged as a result of this test, and there should be no loosening of parts. Counterpart connectors should remain in full engagement and there should be no interruption of electrical continuity longer than 10 milliseconds.

6.5.1.9 SHOCK -- Mated connectors and mated pressure proof covers should be tested in accordance with Method 2004 of MIL-STD-1344. Three blows shall be applied in each direction of the three major axes of the connectors. Receptacles should be mounted on the device or carriage. For the mated connector tests, molded plugs should be engaged to the receptacles and held only by normal locking means. All contacts should be wired in series as shown in the applicable specification (see figure 6-1) and the cables or wire bundles should be clamped to the structures that move with the connectors. A minimum of eight inches of cable should be unsupported behind the rear of each connector. For the mated pressure proof cover tests, the covers should be mated to their respective plugs or receptacles and mounted to the shock device or carriage The covers should be held by the normal locking device. Mated connectors should not be damaged as a result of these tests and there should be no loosening of parts. Counterpart connectors should be retained in full engagement and there should be no interruption of electrical continuity longer than 10 milliseconds.

6.5.1.10 HYDROSTATIC PRESSURE-CYCLING -- The components should be subjected to the cycling tests of paragraph 6.5.1.6 and 2000 cycles of pressure at the operating pressure. A control circuit should be monitored by an electric counter which will indicate circuit damage which may occur during the test. Insulation resistance readings should be measured before, during, and following every one hundred pressure cycles, ± 10 cycles. There should be no evidence of mechanical damage, water leakage, or impaired electrical properties with the plugs, receptacles or mated connectors as a result of these tests.

6.6 HARNESS TEST REQUIREMENTS

Three series of tests are very important in the design and production of DSV pressure proof electrical harnesses. They are:

a. Design verification
b. Preproduction qualification and,
c. Production (quality assurance)

The design verification tests prove the adequacy of the design. These tests are extensive and justified in view of the critical nature of the components being tested.

The preproduction tests indicate evidence of the manufacturer's ability of fabricating the harnesses. These tests allow the fabricator to be placed on the Qualified Products List (QPL).

The production tests are conducted to assure the buyer of the quality of each harness purchased. These tests are conducted on each completed harness prior to shipment to the customer.

The design verification test sequence should be conducted in accordance with table 6-9. The preproduction test sequence should be conducted as shown in table 6-10 while the production test sequence should follow table 6-11.

6.6.1 HARNESS PERFORMANCE AND TEST REQUIREMENTS -- The following test and performance requirements should be used to determine the adequacy of a pressure proof harness assembly used on DSV vehicles.

6.6.1.1 INSULATION RESISTANCE -- Harnesses should be insulation resistance tested in accordance with Method 3003 of MIL-STD-1344. The resistance should be measured between all contacts and between all contacts and the metal shell of the connector.

6.6.1.2 CONTINUITY -- The wired harness assembly should be checked for continuity with a standard circuit tester. There should be no evidence of open circuits as a result of this test, and it should be verified that the conductors are connected in accordance with the applicable specification sheet.

6.6.1.3 DIELECTRIC WITHSTANDING VOLTAGE -- Harnesses should be tested in accordance with Method 3001 of MIL-STD-1344. The applicable test voltage (1,000 volts for the size 20 and 16 contacts and 1,900 volts for the size 12, 8, 4, 0, and 0000 contacts) should be applied between all contacts and between all contacts and the metal shell of the connector.

6.6.1.4 BOND - BOOT TO CONNECTOR (NONDESTRUCTIVE) -- The connectors wired and molded to each end of the harness should be nondestructively checked in accordance with figure 6-2 to assure a proper bond between the connector, the cable, and the molded boot. There should be evidence of a tenatious bond between all the above noted components as a result of probing at 90 degree intervals along the circumference of the molded boot.

6.6.1.5 CABLE FLEXING -- In this test, the wired and molded connectors on each end of the harness should be loosely inserted between a pair of rollers (see figure 6-3) and should be subjected to 90 degree bending in each direction at a rate of 12 to 14 complete cycles, 360 degrees total travel, per minute. The bonded joint between the boot and the cable jacket should be located approximately at 45 degrees above the center line through the two rolls. The lower end of the specimen should be firmly clamped. The clamp should be designed to apply a uniform radial pressure to the core of the cable. The diameter of the rollers should be 2 inches in diameter for cables 3/4 inch in diameter and under 3 inches for 3/4 to 1-1/4 inch in diameter cables, and 5 inches for 1-1/4 to 2 inch diameter cables. The cables should be rotated 90 degrees inside the clamp and the test should be repeated. A complete test of a connector assembly should consist of two cycling tests of 100 cycles each. The cable flexing test should be conducted on each end of the harness assembly.

Table 6-9. Design Verification Sequence Testing of Harnesses

TEST NO.	TITLE	CONTROL TEST	HARNESS ASSEMBLY
1	Examination of Product	--	X
2	Insulation Resistance	--	X
3	Continuity	--	X
4	Withstanding Voltage	--	X
5	Bond - Boot to Connector (Nondestructive)	--	X
6	Cable Flexing	2-3	X
7	Hydrostatic Pressure-Static	2-3	X
8	Thermal Shock	2-3	X
9	Hydrostatic Pressure-Cycling	2-3	X
10	Withstanding Voltage	--	X
11	Insulation Resistance	--	X
12	Bond - Boot to Connector (Destructive)	--	X
13	Examination of Product	--	X

Table 6-10. Preproduction Qualification Test Sequence - Harnesses

TEST NO.	TITLE	CONTROL TEST	HARNESS ASSEMBLY
1	Examination of Product	--	X
2	Insulation Resistance	--	X
3	Continuity	--	X
4	Withstanding Voltage	--	X
5	Bond - Boot to Connector (Nondestructive)	--	X
6	Cable Flexing	2-3	X
7	Hydrostatic Pressure - Static	2-3	X
8	Thermal Shock	2-3	X
9	Withstanding Voltage	--	X
10	Insulation Resistance	--	X
11	Bond - Boot to Connector (Destructive)	--	X
12	Examination of Product	--	X

Table 6-11. Quality Conformance Test Sequence - Harnesses

TEST NO.	TITLE	CONTROL TEST	HARNESS ASSEMBLY
1	Examination of Product	--	X
2	Insulation Resistance	--	X
3	Continuity	--	X
4	Withstanding Voltage	--	X
5	Hydrostatic Pressure - Static	2-3	X
6	Insulation Resistance	--	X
7	Examination of Product	--	X

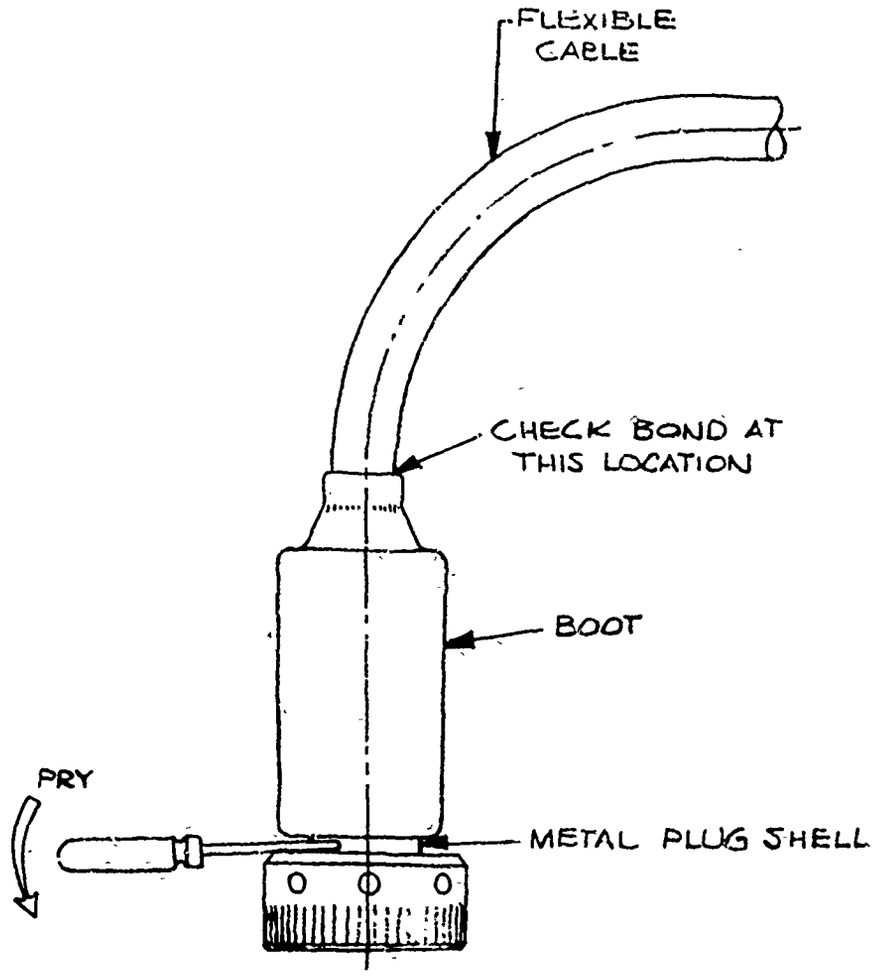

ROUND EDGE PROBE (RIGID PLASTIC OR METAL) WITH NO SHARP EDGES OR CORNERS – DO NOT USE SCREWDRIVER.

IF BOOT PEELS BACK TO REVEAL BARE METAL, THE PLUG ASSEMBLY SHOULD BE REJECTED. REPEAT THIS TEST AT FOUR (4) DIFFERENT POINTS ON CIRCUMFERENCE.

Figure 6-2. Nondestructive Boot-to-Connector Bond Test

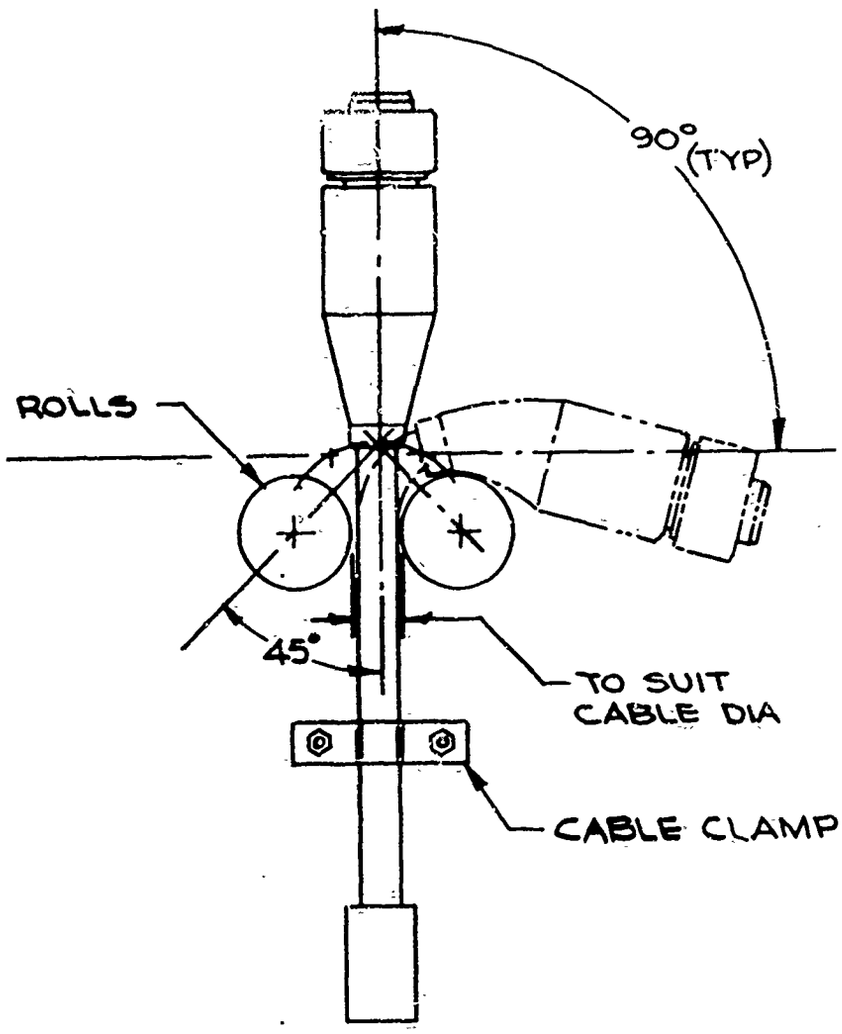

Figure 6-3. Cable Flexing Test Setup

6.6.1.6 HYDROSTATIC PRESSURE-STATIC -- To conduct the static hydrostatic pressure test, the harness assembly should be mated to a receptacle mounted to the internal side of a pressure vessel. A pressure proof plug or receptacle cover (as applicable) should be mated to the other end of the harness. The harness should be wired in accordance with the applicable harness specification. Figure 6-1 is an example. The harness assembly should be tested in a pressure vessel filled with clean tap water. The harness should be tested to one and one-half times the operating pressure of the harness assembly as shown in table 6-12. There should be no evidence of water entry into the harness assembly as a result of the pressure test; nor a deterioration of electrical characteristics which were measured prior to the initiation of the test.

6.6.1.7 THERMAL SHOCK -- Harnesses should be subjected to the thermal shock tests specified in Method 1003 or MIL-STD-1344. The thermal shock test conditions noted in table 6-8 should be used. No damage detrimental to the operation of the harness should be evident as a result of this test.

6.6.1.8 HYDROSTATIC PRESSURE - CYCLING -- The harness should be subjected to the hydrostatic pressure tests of paragraph 6.6.1.6 and 2,000 cycles of pressure at the operating pressure of the harness. A control circuit should be monitored by an electric counter which will indicate circuit damage that may occur during the test. Insulation resistance readings should be measured before, during, and following every one hundred cycles, ± 10 cycles. There should be no evidence of mechanical damage, water leakage, or impaired electrical properties with the harness assemblies as a result of this test.

6.6.1.9 BOND - BOOT TO CONNECTOR (DESTRUCTIVE) -- The molded boots of the connectors on each end of the harness should be subjected to a boot bond test as shown in figure 6-4. The plug boot should be prepared as shown in the figure. The slitted portion of the molded boot is to be pried back to obtain evidence of a properly bonded rubber to metal bond. Evidence of a properly bonded interface should be noted.

6.7 PENETRATOR DESIGN CALCULATIONS

The following typical penetrator design calculations should be prepared for any design under development. In this case, the model used is the penetrator developed under the Deep Ocean Technology Program (DOT) penetrator study. Formulas provided in this outline can be used for most penetrator designs previously developed as well as penetrators to be designed in the future.

The following discussion is designed to present a procedure for predicting stress levels in outboard electrical penetrators. It is intended to serve as a general guide; however, it must be remembered that calculation of stress magnitudes is as much a function of geometric configuration as well as loading. Therefore, specific designs are chosen as examples and any deviations from the geometry as shown could warrant changes in the calculation methods.

The penetrator analysis is subdivided into two portions: The first deals with computation of stresses based on hydrostatic loading, and the second deals with stresses resulting from high impact mechanical shock loads (MIL-S-901).

Table 6-12. Static Hydrostatic Pressure Test Schedule

STEP	PRESSURE (psig) Low	High	HOLD TIME (Minutes)	DEPTH CLASSIFICATION (feet)
1	0	20	5	
2	0	20	5	
3	0	20	5	
4	0	150	5	
5	0	1,000	5	
6	0	2,000	5	
7	2,000	3,000	5	
8	3,000	5,000	5	
9	5,000	6,000	5	
10	5,000	8,000	5	
11	8,000	10,000	5	
12	10,000	12,000	5	
13	12,000	13,600	24 hours	20,000

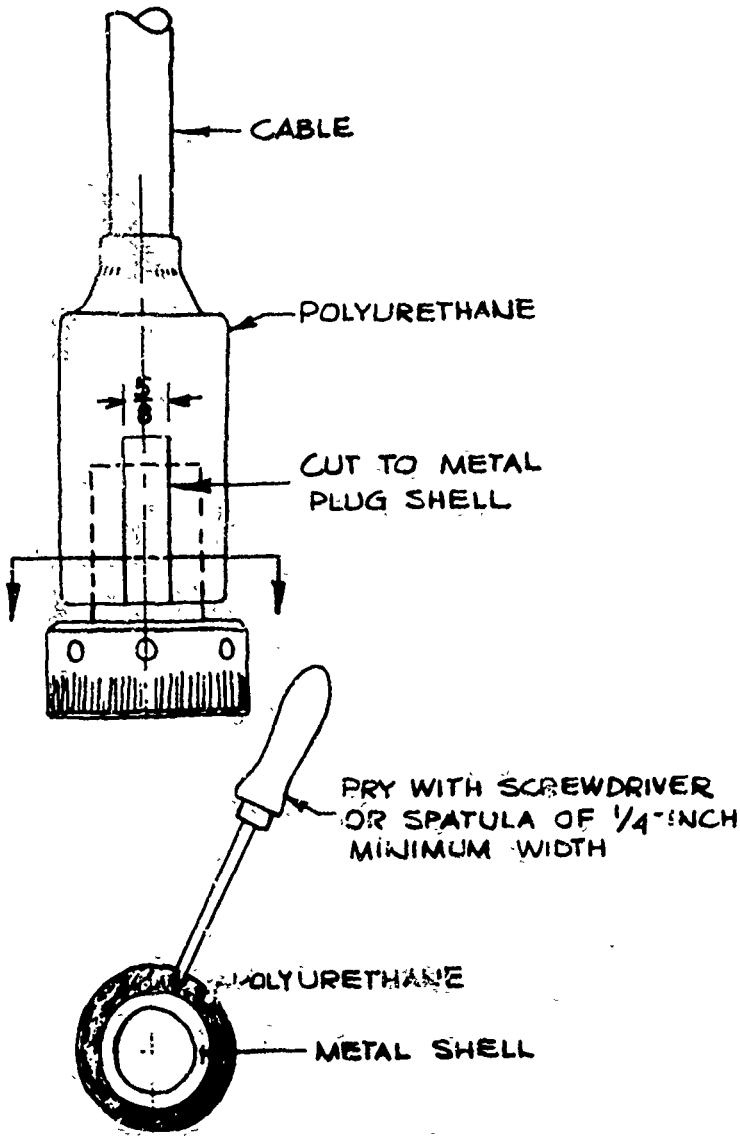

Figure 6-4. Destructive Boot-to-Connector Bond Test

In addition to the stress calculations discussed, consideration of deflections must also be made, especially between close tolerance mating parts and in particular for the members containing the hermetic glass seals. Due to the low elastic modulus and high allowable working strength of the titanium alloy used in fabrication of these parts, large displacements at relatively low stresses can occur. When one considers the mechanics of deformation of the web or header sections containing the glass seals, it becomes evident that deflection must be minimized in order to prevent tensile failure of the glass. The greatest danger associated with this type of failure is cracking of the glass in a region of overstress; however, the crack can propagate into areas of otherwise low stress resulting in a non-localized material failure.

In order to cope with this possibility, deflection must be considered as the limiting design factor. Previous design work employing stainless steel has undergone limited testing which resulted in glass failure at web deflections slightly above 0.002 inch.* Failure took the form of spalling (lateral chipping) which resulted in seepage of the hydrostatic fluid through the glass seal.

As a result of this data, a maximum allowable limit of 0.0015 inch deflection has been chosen as the design criteria for parts containing glass seals. The resulting stresses corresponding to the deflection are considerably less than the design value normally limiting the design.

6.7.1 CRITICAL STRESS ZONE CALCULATIONS (ref. figure 6-5)

A. Bending stress of cover due to hydrostatic loading.

1) For a cover with free edge the maximum stress occurs at its center and is of magnitude:

Ref. 6, page 194

$$S_{max} = -\frac{3pr^2}{8mt^2}(3m + 1)$$

p = hydrostatic pressure (psig)
r = cover radius (in.)
t = cover thickness (in.)
$m = \frac{1}{\text{Poisson ratio}}$

2) For a cover with fixed edge the maximum stress occurs at the edge and is:

Ref. 6, page 195

$$S_{max} = \frac{3}{4} p \frac{r^2}{t^2}$$

B. Shear stress in the cover due to hydrostatic loading.

$$\text{hydrostatic load} = \left\{\begin{matrix}\text{unbalanced surface area of cover} \\ \text{exposed to hydrostatic pressure}\end{matrix}\right\} p$$

Ref. 7, page 5

$$F_h\Big|_s = \frac{\pi}{4} d^2 p$$

d = diameter at shear plane (in.)

shear area, $A_s = \pi dt$

$$S_s = \frac{\pi d^2 p}{4 \pi dt} = \frac{dp}{4t}$$

* 0.002 inch deflection corresponds to a fixed edge plate of nominal 1-3/4 inch diameter and 3/4 inch thickness. This was adjusted using an empirical correction factor equal to three.

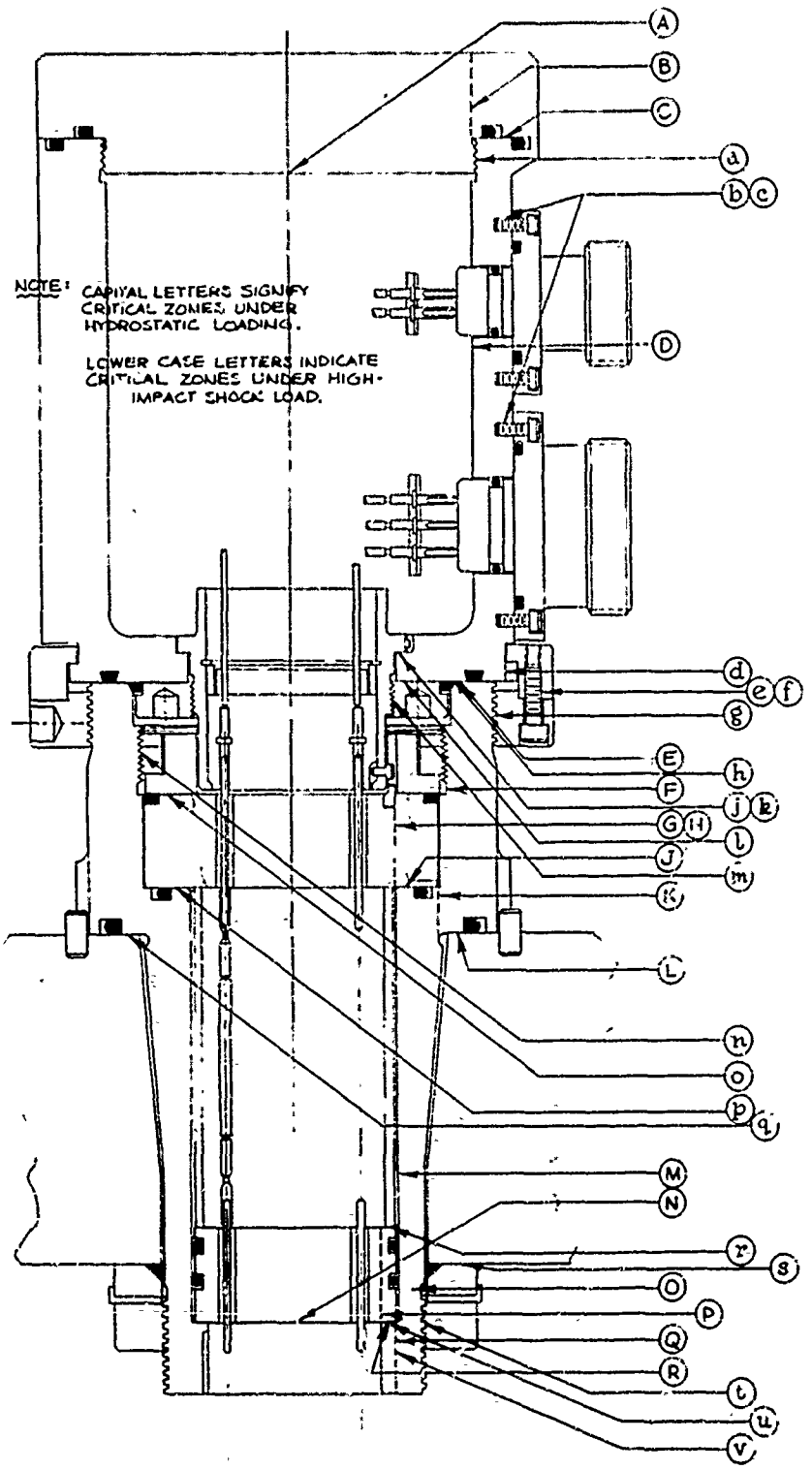

Figure 6-5. Zones of Critical Stress for Multiple Connector Hull Penetrator

C. Bearing stress on cover seat due to hydrostatic loading.

hydrostatic load = $\left\{\begin{matrix}\text{surface area of cover governed} \\ \text{by diameter of outermost seal}\end{matrix}\right\} p$

$$F_h\Big|_c = \frac{\pi}{4} D^2 p$$

D = dia. of outermost seal. (in.)

bearing area = total bearing area minus area of seal groove(s)

$$A_c = \frac{\pi}{4}\left[(D_o^2 - D_i^2) - (D_1^2 - D_2^2) - (D_3^2 - D_4^2)\right]$$

Ref. 7, page 5

$$S_s = \frac{F_h\Big|_c}{A_c}$$

Do = outside dia. (in.)
Di = inside dia. (in.)
D_1 = O.D. of outermost seal (in.)
D_2 = I.D. of outermost seal (in.)
D_3 = O.D. of inner seal (in.)
D_4 = I.D. of inner seal (in.)

D. Bending stress in junction box wall due to hydrostatic loading.

considering a thick wall vessel where the wall thickness is greater than $\frac{1}{10}$ outer radius:

Ref. 6, page 276

$$S_{max} = -p \frac{2r_o^2}{r_o^2 - r_i^2} \quad \text{(at the inner surface)}$$

r_o = outside radius (in.)
r_i = inside radius (in.)

E. Bearing stress at mating surface between penetrator body and junction box due to hydrostatic pressure and torque preload of coupling ring.

The hydrostatic portion of the load is calculated using the same relation given in section C, above. The axial thrust due to torque preload on the coupling ring must be added to the hydrostatic fraction. This is:

$$F_i = \frac{12\,t}{0.2\,d}$$

Where t = torque lb. - ft.
d = nominal thread diameter (in.)
F_i = axial thrust (lb.)

Ref. 8, page 190

The bearing area is computed by a process similar to that shown in section C, above.

$$\therefore\ S_c = \frac{F_h\Big|_c + F_i}{A_c}$$

F. Bending stress in penetrator body wall due to hydrostatic loading.

see section D, above.

G, H. Combined bending and shear stress (principal and maximum shear stresses) in outboard header insert due to hydrostatic loading. |Failure mode|

The maximum bending stress is computed by procedure outlined in section A-2, and the shear stress is found using the procedure discussed in section B.

The principal or maximum normal stresses are:

Ref. 6, page 255

$$S_1' = \frac{Sr}{2} + \sqrt{\left(\frac{Sr}{2}\right)^2 + S_s^2}$$

$$S_2' = \frac{Sr}{2} - \sqrt{\left(\frac{Sr}{2}\right)^2 + S_s^2}$$

Where S_r is max bending stress and S_s is shear stress

The maximum shear stress is:

Ref. 6, page 255

$$S_s\Big|_{max} = \pm\sqrt{\left(\frac{Sr}{2}\right)^2 + S_s^2}$$

J. Bearing stress at mating surface between penetrator body and outboard header insert seat due to hydrostatic loading. [Failure mode]

Procedure similar to that outlined in section C.

K. Shear stress through penetrator body at outboard header insert seat due to hydrostatic loading. [Failure mode]

Procedure similar to that outlined in section B.

L. Bearing stress at mating face between penetrator body and hull insert due to hydrostatic loading and torque preload on penetrator retaining nut.

Procedure similar to that outlined in section E.

M. Bending stress in penetrator body wall due to hydrostatic loading. [Failure mode]

Procedure similar to that outlined in section D.

N. Bending stress in inboard header insert due to hydrostatic loading. [Failure mode]

Procedure similar to that outlined in section A-1.

O. Tensile stress in penetrator shank at thread relief due to hydrostatic loading and torque preload on penetrator retaining nut. [Failure mode]

Calculate hydrostatic portion of axial load similar to section B and torque preload portion of axial load as in section E. This additive load is resisted by the tensile area, A_t :

$$A_t = \frac{\pi}{4}\left(d_o^2 - d_i^2\right)$$

$$S_t = \frac{\text{Total axial load}}{A_t}$$

Where d_o = outside diameter (in.)
d_i = bore diameter opposite thread relief. (in.)

P. Shear stress on inboard header insert due to hydrostatic loading. [Failure mode]

Procedure similar to that outlined in section G.

Q. Shear stress in penetrator shank due to hydrostatic loading. |Failure mode|

Procedure similar to that outlined in section B.

R. Bearing stress at interface of penetrator shank and inboard header insert due to hydrostatic loading. |Failure mode|

Procedure similar to that outlined in section C.

6.7.2 SHOCK LOAD CALCULATIONS --- Consideration of shock loads is made on the basis of the load - weight relation shown in figures 6-6, 6-7 and 6-8. High impact shock loads create stresses wherever two or more separate components are fastened or held together. The shock load can act in any direction causing tensile, compressive, shear or bending stresses in the adjacent parts depending on their geometric interrelation.

Figure 6-5 designates zones where shock loads act and the resulting stresses must be evaluated. These are depicted by letters in lower case. The load acting on any component of the penetrator is calculated by multiplying the weight of that part by the "G" load obtained from figure 6-6 6-7 or 6-8; the latter is a function of the component's weight. The critical zones for shock loading are as follows:

a. Shear stress on cover threads due to high impact shock load and torque preload on cover thread.

$$L_s = \left(\frac{G's}{factor}\right)(\text{weight of cover})$$

t = torque preload (lb. - ft.)
d = nominal thread dia. (in.)

$$F_i = \frac{12\,t}{0.2(d)}$$

Total axial (shear) load = $L_s + F_i$

shear area of cover thread, A_s =

$$A_s = 3.1415\, nL_e\, K_{n_{max}}\left[\frac{1}{2n} + 0.57735\,(E_{s_{min}} - K_{n_{max}})\right]$$

Ref. 9, page 1143

Where n = number threads per inch = 1/pitch
L_e = thread engagement length (in.)
$K_{n_{max}}$ = max. minor dia. internal thread (in.)
$E_{s_{min}}$ = min. pitch dia. external thread (in.)

$$\therefore\ S_s = \frac{L_s + F_i}{A_s}$$

b. Shear stress on cap screws securing receptacle to junction box due to high impact shock load on connector and torque preload on cap screws.

$$L_s\Big|_{connector} = \left(\frac{G's}{factor}\right)(\text{weight of connector})\Big|_{\text{limiting case}}$$

$$L_s\Big|_{screw} = \frac{L_s\Big|_{connector}}{\text{number of screws}}$$

$$F_i = \frac{12\,t}{0.2\,d}$$

Total axial load per cap screw = $L_s\Big|_{screw} + F_i$

shear area, A_s calculated in similar manner as that in section a.

$$S_s = \frac{L_s\Big|_{screw} + F_i}{A_s}$$

c. Tensile stress in cap screw securing receptacle to junction box due to high impact shock load on connector and torque preload on cap screws.

Total axial load same as that calculated in section b.

Tensile area of cap screws is obtainable from machinist's handbook or can be calculated from:

$$A_t = 0.7854\,(D - \frac{0.9743}{n})^2$$

Ref. 9, page 1143

Where D = basic major dia. of thread (in.)
n = number of threads per inch

$$\therefore\ S_t = \frac{L_t\Big|_{screw} + F_i}{A_t}$$

d. Shear stress in junction box coupling ring retaining flange due to high impact shock load and torque preload on coupling ring.

$$L_s\Big|_{junc.\ box} = \left(\frac{G's}{factor}\right) \text{(junction box weight with connectors)}$$

$$F_i = \frac{12\,t}{0.2\,d}$$

Total axial load, $F_s\Big|_t = L_s\Big|_{junc.\ box} + F_i$

Flange shear area, $A_s = \pi dt$

$$S_s = \frac{L_s\Big|_{junc.\ box} + F_i}{A_s}$$

Where d = diameter of shear plane (in.)
t = flange thickness (in.)

e. Tensile stress in coupling ring cap screws due to high impact shock load and torque preload on cap screws.

Shock load is identical to that calculated in section d, above.

$$\text{shock load per screw} = \frac{L_s\Big|_{junc.\ box}}{n}$$

$$F_i = \frac{12\,t}{0.2\,d}$$

Where n = no. of screws in coupling ring

and Total load per screw, $F_n\Big|_t \dfrac{L_s\Big|_{junc.\ box}}{n} + \dfrac{12\,t}{.2\,d}$

$$\therefore\ S_t = \frac{F_n\Big|_t}{A_t}$$

Where A_t is tabulated or calculated by the formula of section C, above.

f. Shear stress in coupling ring cap screws due to high impact shock load and torque preload on cap screws.

Total load on each screw is identical to that calculated in e.

Shear area is calculated by formula of section a.

$$\therefore\ S_s = \frac{F_n\Big|_t}{A_s}$$

g. Shear stress in coupling ring thread due to high impact shock load and torque preload on coupling ring.

Shock load, $L_s = \left(\begin{smallmatrix}\text{G's}\\ \text{factor}\end{smallmatrix}\right)\left(\begin{smallmatrix}\text{junction box weight with}\\ \text{connectors and coupling ring}\end{smallmatrix}\right)$

$$F_i = \frac{12\,t}{0.2\,d}$$

Total load $= F_s\Big|_t$

Shear area of thread (per inch of engagement)

$$A_s = 3.1416\,K_{n_{max}}\left[0.5 + \frac{1}{p}\tan 14\text{-}1/2^{\circ}\,(E_{s_{min}} - K_{n_{max}})\right]$$

Ref: 9, page 1297

Symbols same as in formula of section A.

$$\therefore\ S_s = \frac{L_s + F_i}{A_s}$$

h. Bearing stress at interface of junction box and penetrator due to high impact shock load and torque preload on coupling ring.

Shock load, L_s and preload F_i, same as that of section g.

Bearing area computed by process similar to that discussed in section c.

$$S_c = \frac{L_s + F_i}{A_c}$$

j. Bearing stress at interface of junction box and adapter flange due to high impact shock load and torque preload on adapter retaining nut.

shock load $L_s = \left(\begin{smallmatrix}\text{G's}\\ \text{factor}\end{smallmatrix}\right)\left(\begin{smallmatrix}\text{weight of adapter}\\ \text{and retaining nut}\end{smallmatrix}\right)$

$$F_i = \frac{12\,t}{0.2\,d}$$

$$\text{total load } F_c\Big|_t = L_s + F_i$$

A_c computed by process outlined in section c.

$$S_c = \frac{L_s + F_i}{A_c}$$

k. Shear stress on adapter flange due to high impact shock load and torque preload on adapter retaining nut.

Total axial load same as section j.

Shear area, A_s computed as outlined in section b.

$$S_s = \frac{L_s + F_i}{A_s}$$

l. Bearing stress at interface of junction box and adapter retaining nut due to high impact shock load and torque preload on adapter retaining nut.

Total axial load same as section j.

Bearing area computed by process outlined in section c.

$$S_c = \frac{L_s + F_i}{A_c}$$

m. Shearing stress on adapter thread due to high impact shock load and torque preload on adapter retaining nut.

$$\text{shock load, } L_s = \left(\frac{\text{G's}}{\text{factor}}\right)(\text{weight of adapter})$$

$$F_i = \frac{12\,t}{0.2\,d} \quad ; \quad \text{total load } F_s\Big|_t = L_s + F_i$$

Thread shear area A_s is computed using formula in section a.

$$\therefore\ S_s = \frac{L_s + F_i}{A_s}$$

n. Shearing stress on polarizing ring retaining nut due to high impact shock load and torque preload on polarizing ring retaining nut.

$$\text{shock load, } L_s = \left(\frac{\text{G's}}{\text{factor}}\right)\left(\begin{matrix}\text{weight of polarizing ring and}\\ \text{outboard header insert}\end{matrix}\right)$$

$$F_i = \frac{12\,t}{0.2\,d} \quad ; \quad \text{total load, } F_s\Big|_t = L_s + F_i$$

Thread shear area, A_s computed using formula in section a:

$$S_s = \frac{L_s + F_i}{A_s}$$

o. Bearing stress at interface of outboard header insert and polarizing ring due to high impact shock load and torque preload on polarizing ring retaining nut.

$$\text{shock load, } L_s = \binom{\text{G's}}{\text{factor}}\binom{\text{weight of outboard}}{\text{header insert}}$$

F_i = same as that of section n.

Bearing area, A_c, calculated by method similar to that outlined in section c.

$$\therefore S_c = \frac{L_s + F_i}{A_c}$$

p. Bearing stress at interface of penetrator and outboard header insert due to high impact shock and torque preload on polarizing ring retaining nut.

Shock load, L_s and preload F_i are same as those calculated in section h.

Bearing area, A_c, calculated by method similar to that outlined in Section c.

$$S_c = \frac{L_s + F_i}{A_c}$$

q. Bearing stress at interface of penetrator and hull insert due to high impact shock load and torque preload on penetrator retaining nut.

$$\text{shock load, } L_s = \binom{\text{G's}}{\text{factor}}\binom{\text{weight of total penetrator less}}{\text{seal ring and retaining nut}}$$

$$F_i = \frac{12\,t}{0.2\,d}$$

$$\text{Total load, } F_c\Big]_t = L_s + F_i$$

Bearing area, A_c calculated by method similar to that outlined in section c.

$$\therefore S_c = \frac{L_s + F_i}{A_c}$$

r. Bearing stress at interface of spacer and inboard header insert due to high impact shock loading.

$$L_s = \binom{\text{G's}}{\text{factor}}\binom{\text{weight of inboard}}{\text{header insert}}$$

$$\text{bearing } A_c = \frac{\pi}{4}(d_o^2 - d_i^2)$$

Where d_o = outside dia. of spacer (in.)
d_i = inside dia. of spacer (in.)

$$\therefore S_c = \frac{L_s}{A_c}$$

s. Bearing stress at interface of seal ring and hull insert due to high impact shock and torque preload on retaining nut.

L_s same as that calculated in section r, above.

$$F_i = \frac{12\,t}{0.2\,d}$$

$$F_c\Big|_t = L_s + F_i$$

bearing area, $A_s = \frac{\pi}{4}(d_o^{\,2} - d_i^{\,2})$

Where d_o = outside dia. of seal ring
d_i = inside dia. of contact face of seal ring

$$\therefore\ S_c = \frac{L_s + F_i}{A_s}$$

t. Shear stress on retaining nut thread due to high impact shock load and torque preload on retaining nut.

Shock load and torque preload same as calculated in section q.

Thread shear area, A_s, computed according to formula in section g.

$$S_s = \frac{L_s + F_i}{A_s}$$

u. Bearing stress at interface of inboard header insert and penetrator flange seat due to high impact shock load.

shock load, $L_s = \left(\begin{matrix}\text{G's}\\ \text{factor}\end{matrix}\right)\left(\begin{matrix}\text{weight of insulator and spacer}\\ \text{ass'y and inboard header insert}\end{matrix}\right)$

Bearing area, A_c computed using method similar to that of section c.

$$\therefore\ S_c = \frac{L_s}{A_c}$$

v. Shear stress in penetrator inboard header insert flange due to high impact shock load.

Shock load, L_s same as that calculated in section u, above.

Shear area, A_s calculated using method outlined in section b.

$$\therefore\ S_s = \frac{L_s}{A_s}$$

6.7.3 DEFLECTION CALCULATIONS -- The following formulas are for use in calculating deflection for the condition of hydrostatic loading. Equivalent distributed loading due to high impact shock results in loading much less than that produced by hydrostatic pressure; one need not be concerned with deflection due to shock.

Sections: A & N

Deflection of simply supported flat circular plate:

$$\Delta\Big|_{max} = -\left[\frac{3p\,(m-1)\,(5m+1)}{16\,E\,m^2}\right]\frac{r^4}{t^3}\left[C.F.\right] \text{ (at center)}$$

Where $\Delta\Big|_{max}$ = max. plate deflection (in.)

Ref. 6, page 194

p = hydrostatic pressure (psig)
m = reciprocal of Poisson's ratio
E = elastic modulus (lb./in.^{2})
r = radius of plate (in.)
t = thickness of plate (in.)
C. F. = correction factor based on empirical results for plates containing compression glass seals

Section: H

Deflection of a fixed edge flat circular plate:

$$\Delta\Big|_{max} = -\left[\frac{3p\,(m^2 - 1)}{16\,Em^2}\right]\frac{r^4}{t^3}\left|C.\,F.\right| \quad \text{(at center)}$$

Ref. 6, page 195

Section: D, F & M

Deflection of inner wall of a thick wall cylinder.

$$\Delta r_i = -\,p\frac{r_i}{E}\left(\frac{2r_o^{\,2}}{r_o^{\,2} - r_i^{\,2}}\right)$$

Where r_i = radius of inner wall (in.)
r_o = radius of outer wall (in.)

Ref. 6, page 276

Deflection of outer wall of a thick wall cylinder.

$$\Delta r_o = -\,p\frac{r_o}{E}\left(\frac{r_i^{\,2} + r_o^{\,2}}{r_o^{\,2} - r_i^{\,2}} - V\right)$$

Where V = Poisson's ratio

Ref. 6, page 276

6.8 CONNECTOR DESIGN CALCULATIONS

The following typical connector design calculations should be prepared for any design under development. In this case, the model used is the connector developed under the Deep Ocean Technology Program (DOT) connector study. Formulas provided in this outline can be used for most connector designs developed in past years as well as connectors of the future.

The following procedure is the counterpart of that discussed previously for penetrators. All the considerations, rules and formulas governing the evaluation of stress magnitudes in the penetrator also apply in generating the stress values for outboard connectors. The only variation is in the application of the relations = the consequence of geometric dissimilarity.

The analysis of the outboard connectors is also divided into two parts, the first dealing with hydrostatic loading and the second with high impact shock (MIL-S-901).

6.8.1 CRITICAL STRESS ZONE CALCULATIONS (ref. figure 6-9)

A. Bending stress in plug web due to hydrostatic loading.

$$S_{max} = \frac{3}{4} p \frac{r^2}{t^2}$$

Where p = hydrostatic press. (psig)
r = radius (in.)
t = thickness (in.)

B. Shear stress in plug web due to hydrostatic loading.

$$\text{hydrostatic load} = \left\{\begin{matrix}\text{unbalanced surface area of web} \\ \text{exposed to hydrostatic pressure}\end{matrix}\right\} p$$

shear force, $F_h\Big|_s = \frac{\pi}{4} d^2 p$; d = dia. at shear plane

shear area, $A_s = \pi d t$

Ref. 7, page 5

$$S_s = \frac{F_h\Big|_s}{A_s} = \frac{dp}{4t}$$

A-B Principal normal and maximum shear stress in plug web as a result of combined bending and shear stresses of A & B, above.

The principal or maximum normal stresses are:

$$S_1^{\,1} = \frac{S_r}{2} + \sqrt{\left(\frac{S_r}{2}\right)^2 + S_s^{\,2}}$$

$$S_2^{\,1} = \frac{S_r}{2} - \sqrt{\left(\frac{S_r}{2}\right)^2 + S_s^{\,2}}$$

Where S_r is the maximum bending stress and S_s is the shear stress

Ref. 7, page 255

The maximum shear stress is:

$$S_s\Big|_{max} = \pm\sqrt{\left(\frac{S_r}{2}\right)^2 + S_s^{\,2}}$$

Ref. 7, page 255

C. Shear stress in coupling ring flange due to hydrostatic loading.

Procedure similar to that outlined in section B, above.

D. Bearing stress at mating surface between receptacle and plug coupling ring flange due to hydrostatic loading and torque preload on coupling ring.

hydrostatic load, $F_h\Big|_c = \frac{\pi}{4} D^2 p$

Where D = diameter of outermost seal (in.)

bearing area, $A_c = \frac{\pi}{4}(D_o^{\,2} - D_i^{\,2})$

Where:
D_o = smallest diameter of ring seal shoulder
D_i = largest receptacle bore

$$\therefore S_c = \frac{F_h\Big|_c}{A_c}$$

E. Bending stress of plug front shell wall due to hydrostatic loading. |Failure mode|

$$S_{max} = -p \frac{2r_o^2}{r_o^2 - r_i^2}$$

Where r = outside radius of shell (in.)
r_i = inside radius of shell (in.)

Ref. 6, page 276

F. Shear stress in receptacle O-ring groove wall due to hydrostatic loading |Failure mode| and torque preload on coupling ring.

axial thrust due to torque preload, $F_i = \frac{12\,t}{0.2\,d}$

Ref. 8, page 190

hydrostatic load, $F_h = \frac{\pi}{4}(d^2)\,p$

total load, $F_t = F_i + F_h$

shear area, $A_s = \pi d t$, where t = thickness of O-ring groove wall (in.)

$$\therefore S_s = \frac{F_i + F_h}{A_s}$$

This calculation is made based on the assumption that the entire load is carried solely by the annular portion of the receptacle face bounded by the O-ring groove outer (bottom) diameter and the receptacle bore diameter.

G. Bending stress in receptacle wall due to hydrostatic loading.

Procedure similar to that outlined in section E, above.

H. Shear stress in receptacle web due to hydrostatic loading. |Failure mode|

hydrostatic load, $F_h = \frac{\pi}{4}(d^2)\,p$; Where, d = bore diameter of receptacle

shear area, $A_s = \pi d\,(t)$; Where, d = same as above
t = web minimum thickness

$$S_s = \frac{F_h}{A_s}$$

J. Bearing stress on receptacle seat due to hydrostatic loading and torque preload on retaining screws.

hydrostatic load, $F_h = \frac{\pi}{4}(d)^2\,(p)$ Where d = diameter of recp. seal

screw load, $F_i = \frac{12\,t}{0.2\,d}$

total screwload, $F_i\Big|_t = n\,F_i$ Where n = numbers of screws

(theoretically, the latter is not correct but is calculated to yeild the largest bearing load)

total bearing load, $F_c\Big|_t = F_h + n\,F_i$

bearing area, $A_c = \frac{\pi}{4}\left[(D_o^2 - D_i^2) - (D_1^2 - D_2^2)\right]$

Where D_o = flange outside diameter (in.)
D_i = bore dia. of hole for recp. (in.)
D_1 = outside diameter of O-ring groove (in.)
D_2 = inside diameter of O-ring groove (in.)

$$\therefore S_c = \frac{F_h + n\,F_i}{A_c}$$

K. Shear stress on O-ring groove wall due to hydrostatic loading. [Failure mode]

hydrostatic load, $F_h = \frac{\pi}{4}(d_o^2 - d_i^2)\,p$

Where, d_o = maximum bore dia. of seal
d_i = minimum O-ring groove dia. of receptacle

shear area, $A_s = \pi d_i\,(t)$

Where d_i is same as above
t = thickness between back of O-ring groove and end of receptacle.

$$\therefore S_s = \frac{F_h}{A_s}$$

L. Bending stress in receptacle web due to hydrostatic loading. [Failure mode]

Procedure similar to that outlined in section A.

6.8.2 SHOCK LOAD CALCULATIONS -- Consideration of shock loads is made on the basis of the load - weight relations shown in figures 6-6, 6-7, and 6-8. High impact shock loads create stresses wherever two or more separate components are fastened or held together. The shock load can act in any direction causing tensile, compressive, shear or bending stresses in the adjacent parts depending on their geometric interrelation.

Figure 6-9 designates zones where shock loads act and the resulting stresses must be evaluated. These are depicted by letters in lower case. The load acting on any component of the penetrator is calculated by multiplying the weight of that part by the G load obtained from figure 6-6, 6-7, or 6-8; the latter is a function of the component's weight. The critical zones for shock loading are as follows:

a. Shear stress in plug coupling ring flange due to high impact shock load.

$L_s = \left(\frac{G's}{factor}\right)$ (weight of plug assembly)

$A_s = \pi d t$

Where d = diameter of shear plane (in.)
t = flange thickness (in.)

$$S_s = \frac{L_s}{A_s}$$

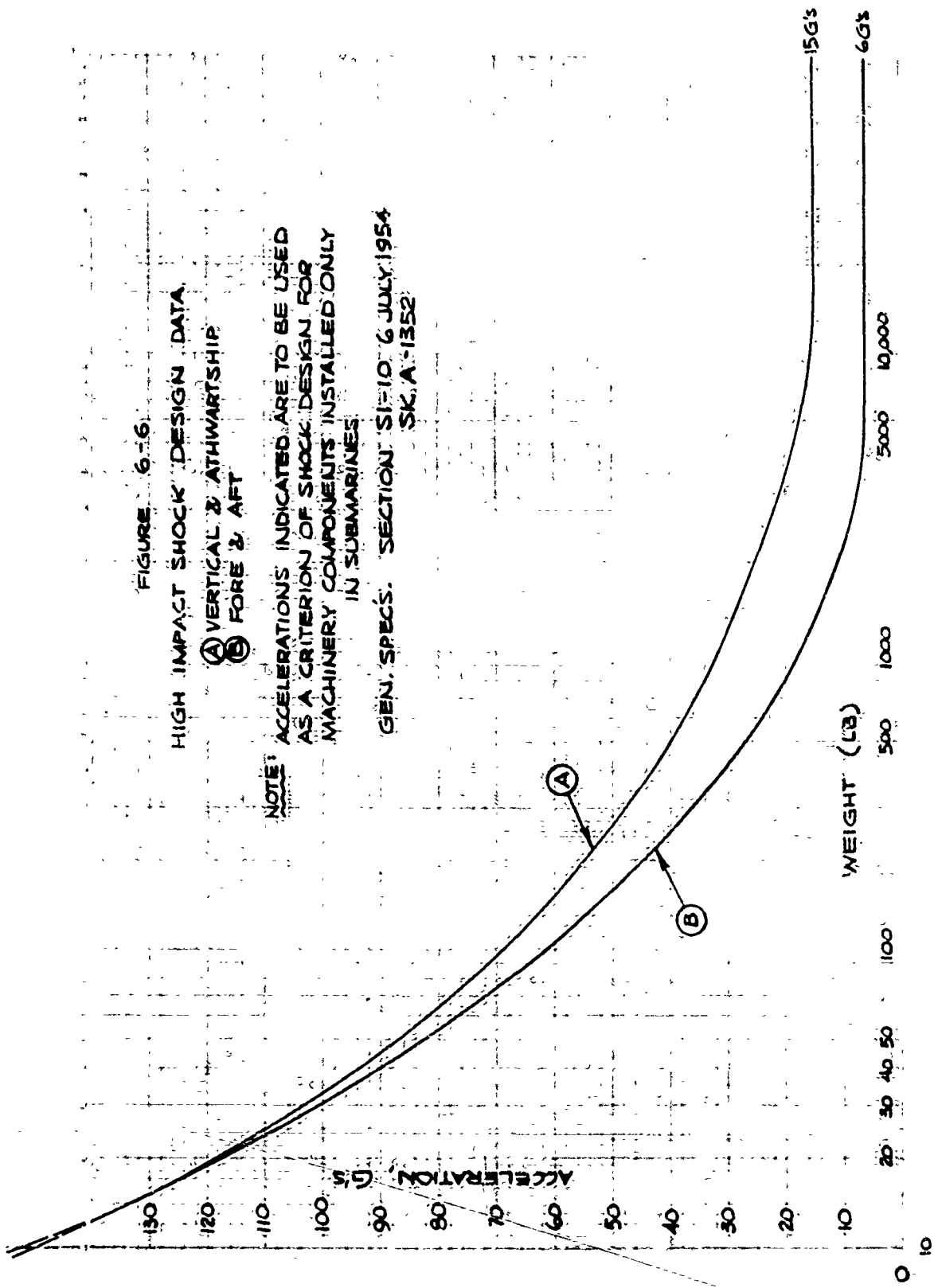

Figure 6-6. High Impact Shock Design Data

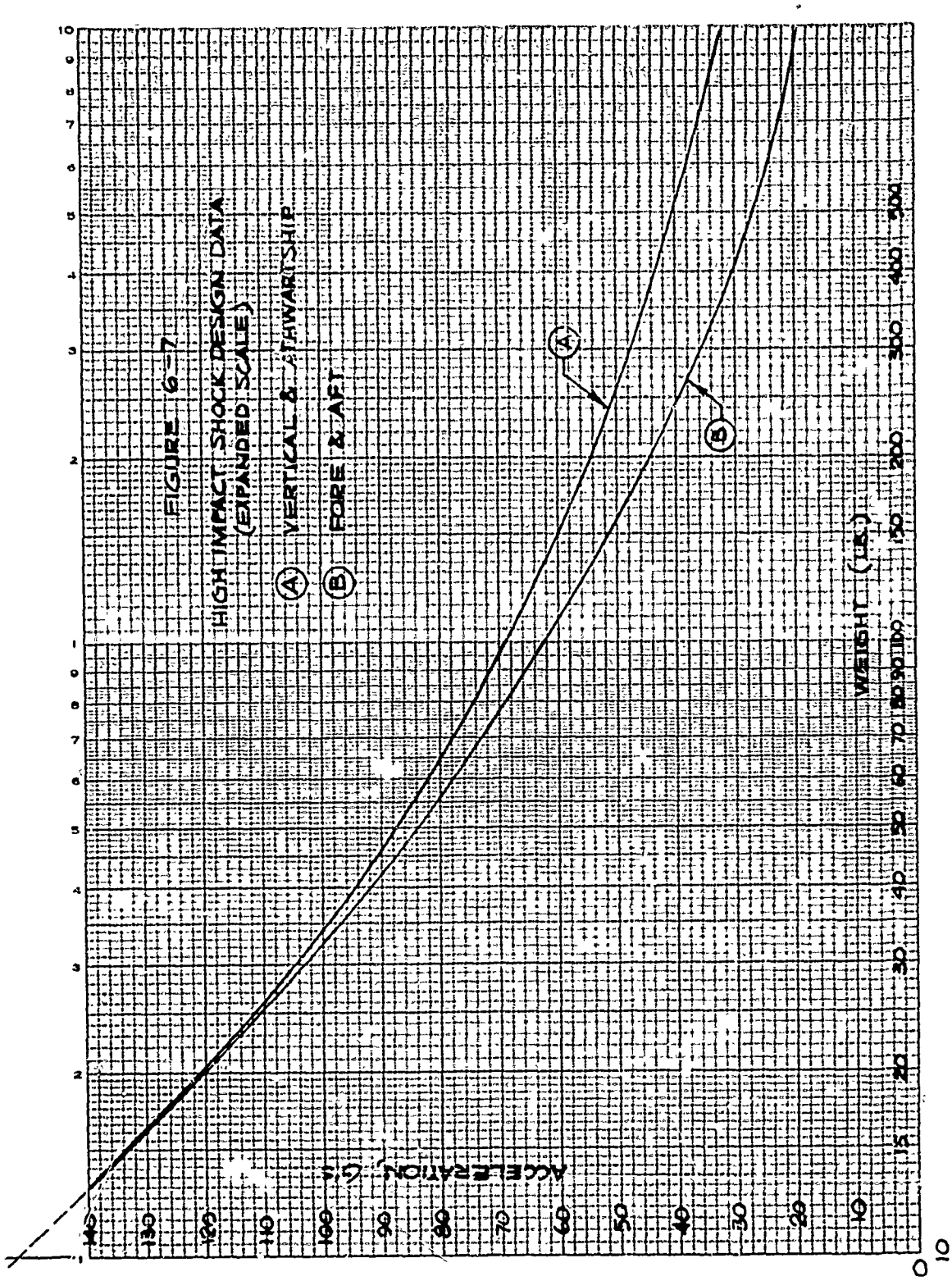

Figure 6-7. High Impact Shock Design Data (Expanded Scale)

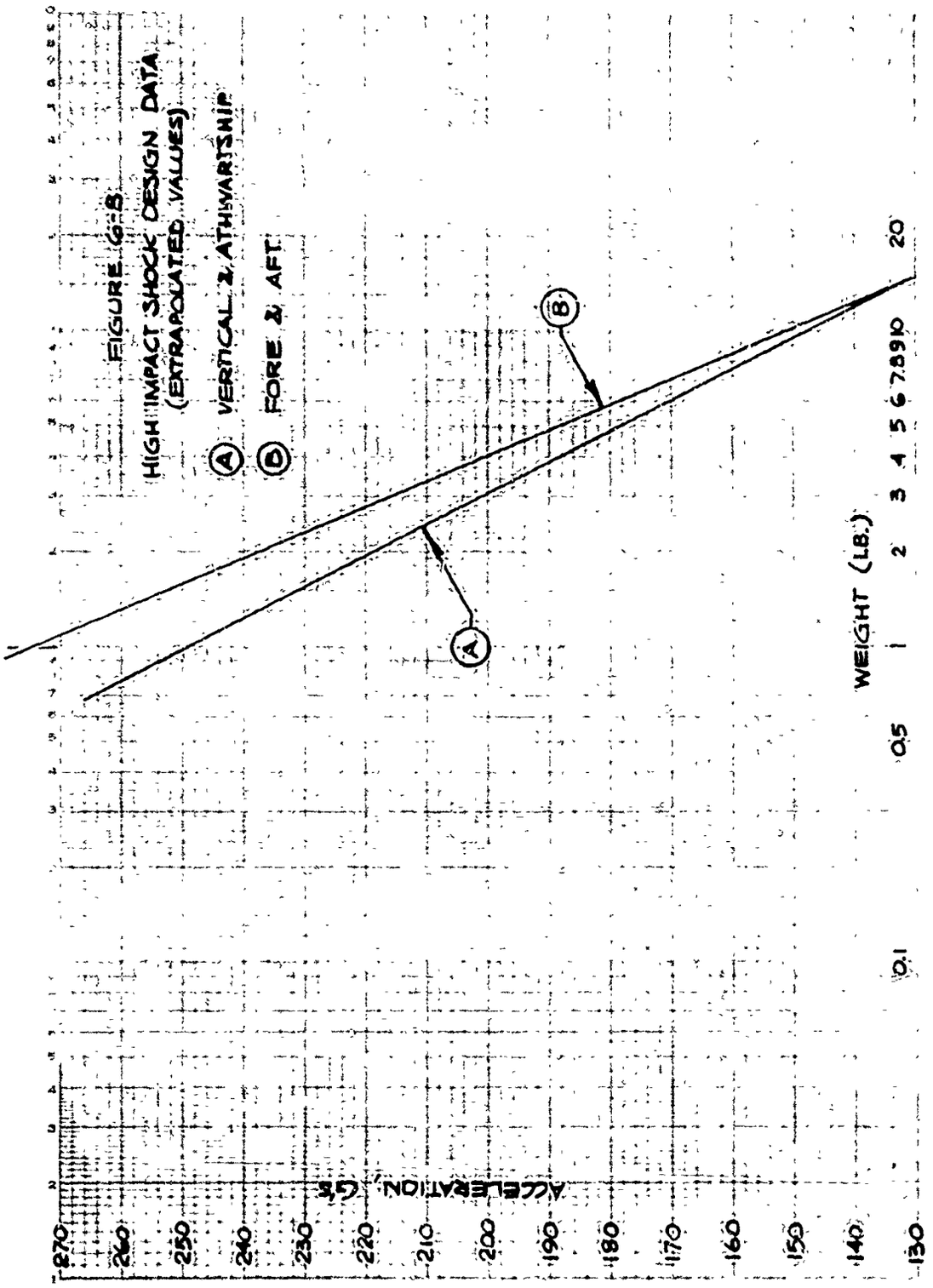

Figure 6-8. High Impact Shock Design Data (Extrapolated values)

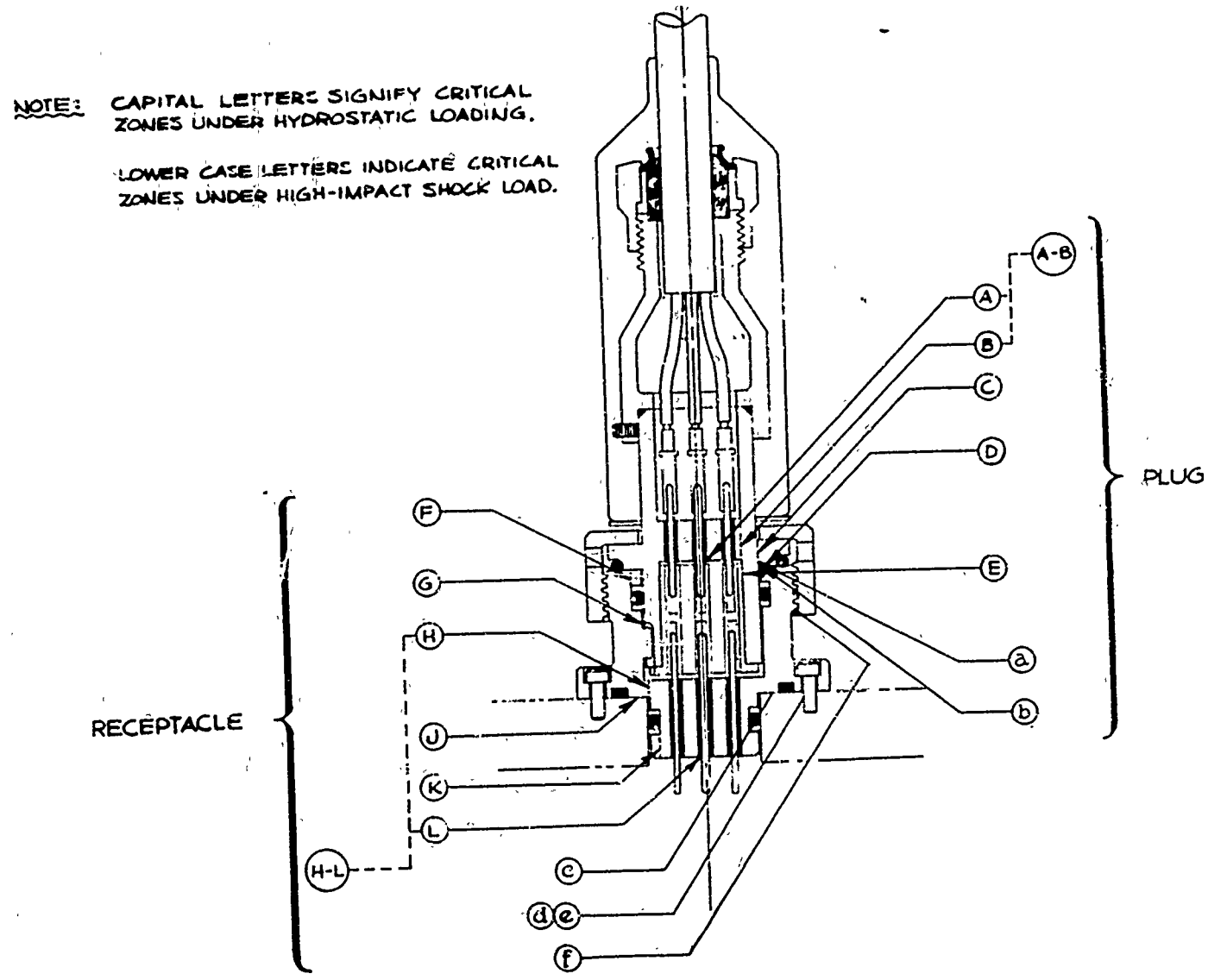

Figure 6-9. Zones of Critical Stress for Electrical Connectors

b. Bearing stress at mating surface between receptacle and plug coupling ring flange due to shock load and torque preload on coupling ring.

$$F_i = \frac{12\,t}{0.2\,(d)}$$

L_s = same as that calculated in section a.

$$F_t = F_i + L_s$$

A_c = same as that calculated in section D.

$$S_c = \frac{F_i + L_s}{A_c}$$

c. Shear stress on coupling ring thread (receptacle) due to high impact shock load and torque preload on coupling ring.

total load F_t = same as that of section b, above.

shear area, $A_s = 3.1416\, K_{n_{max}} \left[0.5 + \frac{1}{p} \tan 14\text{-}1/2^{o}\, (E_{s_{min}} - K_{n_{max}})\right]$ (per inch of engagement)

Where, $K_{n_{max}}$ = max. minor dia., internal thread (in.)

$E_{s_{min}}$ = min. pitch dia., external thread (in.)

Ref. 9, page 1297

$$\therefore S_s = \frac{F_t}{A_s}$$

d. Tensile stress in receptacle retaining screws due to high impact shock load and torque preload on screws.

$$F_i = \frac{12\,t}{0.2\,d}$$

$$L_s = \left(\frac{G's}{factor}\right) \text{(weight of connector ass'y)}$$

Total axial load per screw:

$$F_t = \frac{L_s}{n} + F_i$$

Where n = Total number of screws

Tensile area of capscrews is obtainable from machinist's handbook or can be calculated from:

Ref. 9, page 1143

$$A_t = 0.7854\,(D - \frac{0.9743}{n})^2$$

Where D = basic major diameter of thread (in.)

n = number of threads per inch

$$\therefore S_t = \frac{F_t}{A_t}$$

e. Shear stress in receptacle retaining screw threads due to high impact shock load and torque preload on screws.

Shear load, F_t = same as that calculated in section d.

Shear area, A_s computed from formula given in section c, for thread size of screw.

$$S_s = \frac{F_t}{A_s}$$

f. Bearing stress on receptacle seat due to high impact shock load and torque preload on retaining screws.

Shock load, L_s = same as that of section d.

Total screwload, see section J.

$$F_c\Big]_t = nF_i + L_s$$

Bearing area, A_c = same as that of section J.

$$\therefore S_c = \frac{nF_i + L_s}{A_c}$$

6.8.3 DEFLECTION CALCULATIONS -- The following formulas are for use in calculating deflection for the condition of hydrostatic loading. Equivalent distributed loading due to high impact shock results in loading much less than that produced by hydrostatic pressure; one need not be concerned with deflection due to shock.

Section: A & L

Deflection of a fixed edge flat circular plate:

$$\Delta\Big]_{max} = -\left[\frac{3p\,(m^2 - 1)}{16Em^2}\right]\frac{r^4}{t^3}\,\left[C.\,F.\right] \text{ (at center)}$$

Ref. 6, page 195

Section: E & G

Deflection of inner wall of a thick wall cylinder.

$$\Delta r_i = -p\frac{r_i}{E}\left(\frac{2r_o^2}{r_o^2 - r_i^2}\right)$$

Where r_i = radius of inner wall (in.)
r_o = radius of outer wall (in.)

Ref. 6, page 276

Deflection of outer wall of a thick wall cylinder.

$$\Delta r_o = -p\frac{r_o}{E}\left(\frac{r_i^2 + r_o^2}{r_o^2 - r_i^2} - V\right)$$

Where V = Poisson's ratio

Ref. 6, page 276

6.9 HARNESS AND PENETRATOR INSTALLATION GUIDELINES

The fabrication, inspection and test operations described in previous sections are accomplished in shop areas. They are relatively easy to preform with proper quality control resulting. In sharp contrast, the operations described in these paragraphs must be performed on the vehicle, in crowded work areas. Proper quality control can only be achieved by enforcing the following three rules:

a. The work must be accomplished using specific procedures with no deviations allowed.
b. The components must be adequately protected from the environmental hazards present during installation and subsequent maintenance periods.
c. Personnel performing the tasks must be familiar with the procedures and have manuals available for reference, check-off lists are recommended.

6.9.1 HULL PENETRATOR INSTALLATION -- The following procedures are recommended for installing the electrical hull penetrators:

a. Check the penetrator assembly in the shop to assure that the inspection tags indicate that the penetrator has passed the electrical and mechanical tests prescribed. These include continuity, insulation resistance, withstanding voltage, hydrostatic pressure, and checks of the O-ring seal surfaces for possible nicks and scratches.
b. The O-rings should be visually checked for damage.
c. Remove the protective caps from the outboard and inboard receptacles on the penetrator and check the O-ring and O-ring seal surfaces for dirt, nicks and scratches. All O-rings should be coated with a thin film of lubricant per MIL-L-4343. Replace the caps immediately after the inspection.
d. Replace the penetrator assembly in its shipping container.
e. Ship the penetrator assembly from the shop to the vehicle. Provide the necessary instructions to the shipping agent to assure no damage occurs in transit.
f. Remove the protective caps from the vehicle hull insert into which the penetrator will be placed. Inspect the seal surfaces for scratches, dents and foreign material that could be detrimental to the penetrator-to-hull seal. Replace the protective covers on the hull insert until the actual penetrator installation is accomplished.
g. Remove the penetrator from its shipping container, wipe it with a clean cloth, and remove the protective receptacle cover from the inboard end.
h. Wrap a tape over the penetrator threads to prevent damage to the threads or damage to the hull seal surfaces.
i. Visually inspect the penetrator primary seal O-ring and assure that it is lubricated with a light film of lubricant.
j. Carefully place the O-ring on the penetrator body and install the penetrator into its hull-insert hole. Be sure that it is properly polarized to the hull. (This installation must be inspected and signed by the installer and the proper inspection agency who must also verify that the O-ring is the proper size, compound and cure date for the application.

k. Remove the protective tape from the inboard threads on the penetrator.

l. Visually inspect the penetrator secondary seal O-ring and assure that it is lubricated with a light film of lubricant.

m. Carefully place the O-ring on the penetrator body. (This installation must be inspected and signed by the installer and the proper inspection agency who must also verify that the O-ring is the proper size, compound and cure date for the application).

n. Fit the seal ring and washer over the threads and into place. Assemble the retaining nut on the penetrator threads, and torque it to its assigned value using the proper sized spanner wrench torquing tool.

o. Replace the protective cap on the inboard end of the penetrator until such a time that the inboard harness is plugged into the penetrator.

6.9.2 OUTBOARD HARNESS INSTALLATION -- the following procedures are recommended for installing the electrical hull penetrators.

a. Check the outboard harness assembly in the shop to assure that the inspection tags indicate that the harness has passed the electrical and mechanical tests prescribed. These include continuity, insulation resistance, withstanding voltage, hydrostatic pressure, and checks of the plug O-rings and seal surfaces for possible nicks and scratches.

b. Remove the protective caps from the plugs (or receptacles) on each end of the cable and check the O-rings and O-ring seal surfaces for dirt, nicks and scratches. All O-rings should be coated with a thin film of lubricant per MIL-L-4343. Replace the protective caps immediately after inspection.

c. Replace the harness assembly in its original shipping container.

d. Ship the harness assembly from the shop to the vehicle. Provide the necessary instructions to the shipping agent to assure no damage occurs in transit.

e. Begin the installation at the electrical hull penetrator.

f. Remove the receptacle protective cap in the penetrator receptacle and visually inspect the receptacle internals, O-ring and seal surface for cleanliness and nicks and scratches. The O-ring should be appropriately lubricated.

g. Remove the protective cap on the harness plug and visually inspect the O-ring and seal surfaces for cleanliness and nicks and scratches on the seal surface. O-ring lubrication should be evident.

h. Mate the plug assembly by hand to the receptacle. Complete the operation with the appropriate pin type spanner wrench. This can be determined by lightly tapping the spanner handle with a metal rod. When the coupling ring is adequately tightened, the sound of the tapping will rise sharply in pitch to a ping sound.

i. Arrange the harness in its protective device on or near the penetrator so it attains a strain free attitude exiting the penetrator. It may be necessary to temporarily tie or band the harness while the remainder of the cable is secured.

j. Run the harness in the protective and support devices provided. Attach the cable to the support device in the manner prescribed. Banding with plastic bands is usually used here. The cables need not be banded to the device until the entire harness has been run to the component at the other end. After securing the harness, flex the unsupported parts of the cable loop to be sure that the cable will not be forced into contact with surrounding structures by the strong forces of water flow.

k. Remove the protective cap on the component receptacle and visually inspect the seal and seal surfaces as described earlier.

l Remove the protective cap on the harness plug and visually inspect the seals and seal surfaces.

m. Mate the plug to the receptacle in a similar manner as described at the hull penetrator.

n. When all of the harnesses for a particular penetrator are mated to their respective components, the cables can be banded to the support devices.

o. After all the cables are banded to the support devices, the protective covers (if any) may be attached to the supporting structure.

p. The following notes apply to the installation of a harness:

1. Never bend the cable tighter than the minimum bending radius prescribed in the applicable harness specification.
2. When removing a cable or harness from its shipping container (a reel, for example), exercise extreme care to ensure that the cable is not kinked or twisted.
3. Always unroll the cable from a reel or coil since looping it or the sides will cause harmful kinks.
4. Never use mechanical means, such as a rope or chain fall to pull the cable taut.
5. Ensure that the cables or harnesses are protected from mechanical damage at all times, especially in areas where personnel are likely to step on or otherwise damage the cable.
6. Be extremely careful in handling and bending cables in arctic type conditions. Check the applicable cable specification for the allowable cable temperature range.

All electrical cables located outboard of the submarine must be fully protected and supported.

The outboard harnesses on a submarine are generally protected and supported by cable pans, angle bar, or the superstructure itself. The harnesses must be protected as they have a rubber jacket which is susceptible to damage in service and at installation. The cables are run in areas where they can be easily damaged by weld flash, sharp protrusions, and personnel stepping on, or dropping objects on them. The topside area is so congested that personnel must use existing foundations, equipment or other appendages to walk from one area to another. Therefore, all outboard equipment must be rugged to withstand the hazards of tools and personnel working in these areas. The harnesses must also be protected and supported to withstand the hydrodynamic sea forces during submerged and surface operations. Harnesses that are not fully supported and protected are subject to damage from hydrodynamic forces, to jacket wear and erosion by rubbing against foundations or other similar appendages.

6.9.3 INSPECTION AND HANDLING O-RINGS -- O-rings should be handled with care like all other gaskets. They should be kept packaged until ready for inspection and assembly to prevent their getting damaged. All MIL-SPEC O-rings are delivered with the date of manufacture stamped on the package. All O-ring applications associated with connectors discussed in this manual are STATIC.

O-rings should be installed or removed with the use of an O-ring tool fabricated from semi-rigid plastic. (see figure 6-10) Knives, picks and other sharp objects should not be used as they may damage the O-ring groove surface as well as the O-ring.

In the outboard electrical system, O-rings are used to seal plugs to receptacles and penetrators to the hull. Regarding electrical connectors, a radial O-ring gasket is located in the receptacle and a flat dovetail grooved O-ring is located in the plug. (see figure 6-11) The hull penetrator O-rings are located inboard and outboard of the hull insert in triangular shaped grooves. (see figure 6-12)

The connector and the penetrator O-rings are provided with these items when purchased. The connector O-rings should not be installed until ready for service. The plug O-ring is installed following the plug wiring and molding operation just prior to pressure testing. The O-rings need not be replaced following the tests. Barring damage, the O-ring should see long service in this application (at least five years). The O-rings should be lubricated with a very thin film of MIL-L-4343 lubricant prior to installation. The ring grooves must be free of dirt and other foreign particles to obtain the desired seal. The O-ring must be visually examined before installation to be sure that it is free of nicks, dents or flats that would impair sealing. MIL-STD-413 "Visual inspection guide for rubber O-rings" should be used to determine the adequacy of the O-rings for installation on a vehicle. Following a number of years of service, the O-ring material may take on a permanent set and flatten out in the seal area. At this time, the O-ring should be replaced.

With regard to the penetrator, the O-ring is compressed to a large extent and, therefore, takes on a permanent set more readily than in the connectors. As hull watertight integrity is affected by these seals, new gaskets should be provided each time the fitting is removed from its location in the hull.

6.9.3.1 STOCKING AND ORDERING O-RINGS -- When replacing an O-ring, the O-ring drawn from stock should be carefully handled and visually inspected for defects. MIL-STD-413 aptly shows the major defects that might be found in O-ring manufacture. MIL-STD-413 must be referred to when inspecting O-rings. MIL-STD-177, "Terms for Visible Defects of Rubber Products," lists the terms for the visible defects of rubber products and, can be of service when reporting defects in the manufacturer's product.

Basically the O-ring should be sized in accordance with the specifications, be free of excessive flash, back rind, dents, depressions, flow lines, bad fillings which cause dents and depressions,

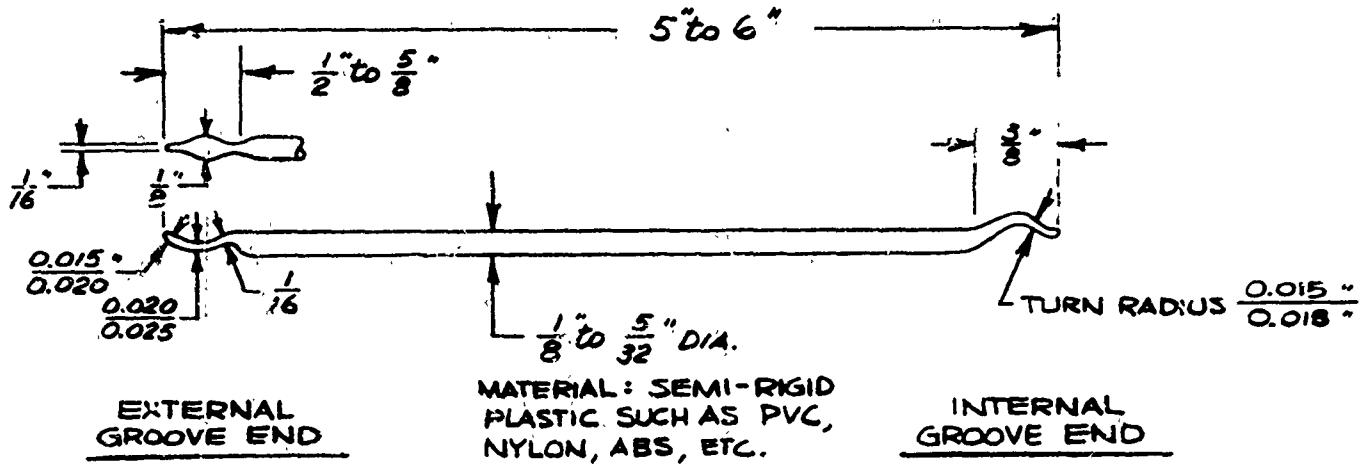

Figure 6-10. O-ring Removal Tool

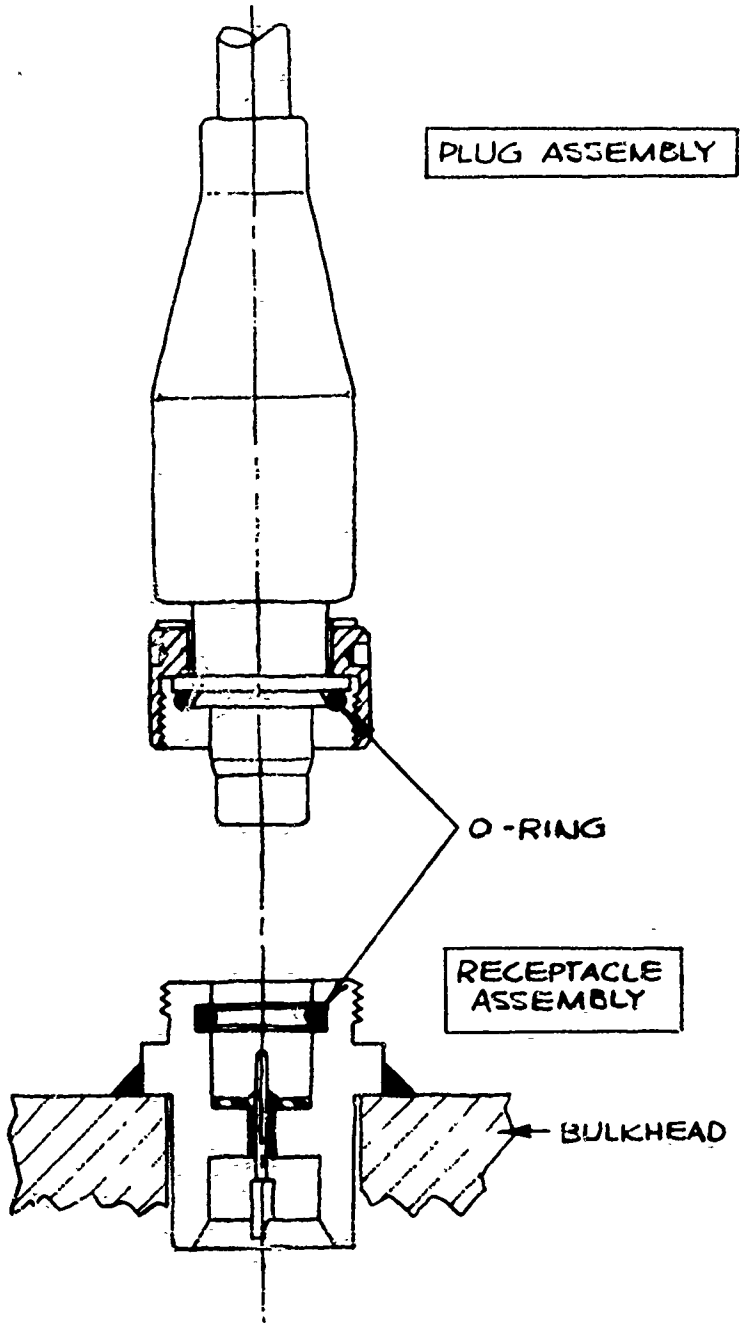

Figure 6-11. Plug and Receptacle Assembly O-Ring Locations

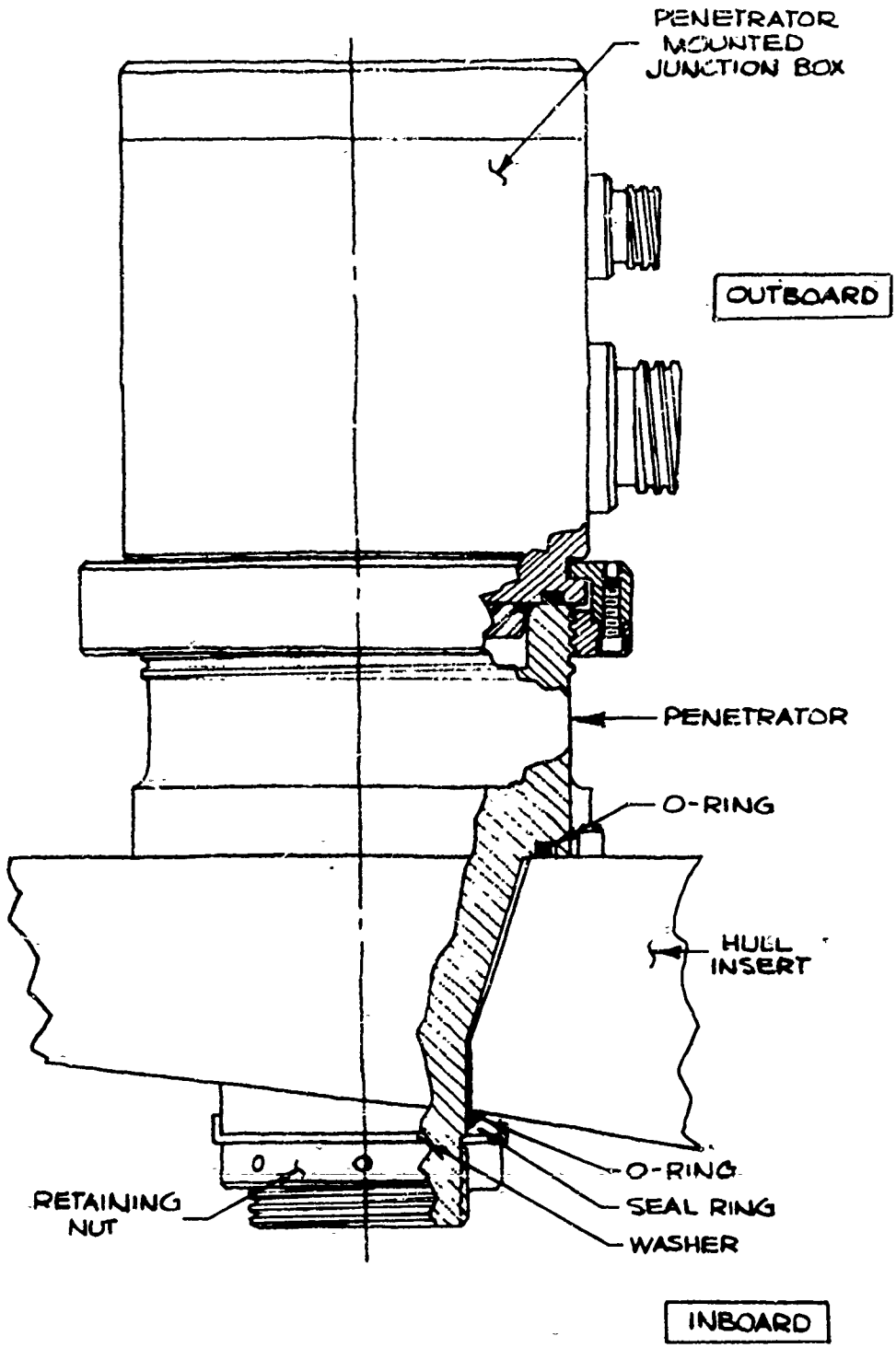

Figure 6-12. Penetrator O-ring Locations

foreign materials and splits. To be recognized and appreciated, these defects must be viewed in MIL-STD-413. The O-ring cross section dimensions can be checked with a micrometer.

O-rings are packaged in dated containers. Do not use O-rings that have a cure date greater than 8 quarters.

Correct identification of an O-ring must include its dimensions and material. The size is specified by the designation of standard ARMY-NAVY (AN) or Military Standard (MS) drawing number. These drawings show the dimensions to which each O-ring size must conform. For the watertight connectors used on vehicles, AN6227, AN6230, or ARP568 drawings are used where possible. O-rings of these sizes are stocked in shipyards and Navy installations.

The O-ring material specified in these applications is a BUNA-N compound which conforms to MIL-P-5516, Class B and MIL-P-25732. The BUNA-N material provides satisfactory service in a salt water environment. For qualified suppliers, see Qualified Products Listing, QPL-5516.

6.9.4 SPECIAL PRECAUTIONS FOR EXAMINING OUTBOARD HARNESSES AND HULL PENETRATORS.

6.9.4.1 PLUG HARNESS DISCONNECTION -- Before disconnecting an outboard plug, ensure that there is sufficient slack in the cable in front of the first cable clamp or fastener so that the cable is not bent excessively or twisted. If insufficient slack exists, unclamp or unband the cable to provide the necessary slack.

6.9.4.2 PROTECTING INSTALLED EXPOSED CABLES -- Do not open the outboard cable pans or remove protective cable covers unless absolutely necessary. If the cables are exposed, provide temporary protection so that the cables will not be damaged.

6.9.4.3 PROTECTING REMOVED CABLES -- When removing outboard equipment, avoid dragging the cable around sharp corners or edges and avoid contact with barnacles as this can result in damage to the cable jacket. Do not step on, or drop objects on the cables as this can result in damage. Do not use the cables or plugs as handles to move attached equipment or as points to fasten lifting slings to.

6.9.4.4 PROTECTION OF SHORE POWER EQUIPMENT -- When shore power is secured and the shore power cables are removed from the ship, make sure the shore power plugs have their protective caps in place.

6.9.4.5 DE-ENERGIZING CABLES BEFORE HANDLING -- Do not disconnect outboard cables until it has been ascertained that the circuit has been de-energized. In certain circuit designs, male pins on receptacles can be electrically hot when disconnected. This is particularly true of the Electrical Hull Penetrators and Junction Boxes. In the vehicle maintenance manual the circuits in a given penetrator should be identified to inform personnel doing the work which circuits should be de-energized.

6.9.4.6 CAPPING PLUGS AND RECEPTACLES -- Whenever an outboard cable harness is disconnected, immediately place metal protective pressure caps on the plug and receptacle to

prevent the entry of foreign material and possible damage. The use of metal or plastic dust caps is not considered a good practice bacause if left on during a mission, they could cause flooding. Do not disconnect cables unless necessary.

6.9.4.7 TESTING PRECAUTIONS -- Before meggering connected cable harnesses or test points in the hull fitting terminal boxes, be sure the connected equipment can withstand the applied megger voltage. Generally speaking, it is advisable to disconnect the harness at both ends and obtain insulation resistance readings. This will locate the fault, if any. The maintenance manual should give detail instructions for trouble shooting electrical penetrators and harnesses.

6.9.4.8 CLEANING CONTAMINATED PLUGS AND RECEPTACLES -- In the event the receptacle or plug faces become contaminated by salt water or other foreign material, swab out the receptacle or plug with distilled water, then dry it with dry nitrogen. Repeat the operation as necessary until adequate insulation resistance values are obtained.

6.9.4.9 CONNECTOR REMATING PRECAUTIONS -- Caution must be exercised when mating plug to receptacle connectors to ensure that the proper plug is mated to the proper receptacle. If they are physically matched, but are electrically mismatched, damage to the equipment can result. If attempts are made to mate the plugs to receptacles having nonstandard key orientations with a component that has a standard key orientation, physical damage to the plug and/or receptacle can result. These keyway deviations may not be readily discernable to the eye.

6.9.4.10 SECURING EXCESS OUTBOARD CABLES -- When replacing an outboard cable harness, if cable slack exists, carefully coil this cable in a protected area in the ship's structure where it will not be exposed to excessive water turbulence and secure it with banding or other specified fasteners so that it is adequately supported and restrained. Do no sheepshank the cable or bend the cable back on itself. Conform to the minimum bend radius for the specific cable type.

6.9.4.11 REBANDING INSTRUCTIONS -- When rebanding cables, do not tighten the bands excessively so that they cut into or bunch the cable jacket.

6.9.4.12 PRECAUTIONS FOR INBOARD END OF ELECTRICAL HULL PENETRATOR -- When working on or around the inboard end of the electrical hull penetrator, use extreme care. The inboard end should be fitted with a protective cover immediately after penetrator installation to protect against injury to contacts. Bent or broken pins cannot be replaced, and the entire penetrator will be lost if such damage is incurred. If the penetrator has inboard pigtails in line of contacts, care must be taken that the pigtails are not damaged due to rough handling or carelessness.

6.10 FUNCTIONAL FAILURE MODES AND EFFECTS ANALYSIS

A Failure Mode and Effects Analysis (FMEA) is an important tool for an engineer in the design of a system and its component. It is a basic tool for evaluating a system or component and improving its reliability. Use of an FMEA at the proper time during system development can reveal design deficiencies which could require costly design modifications. An FMEA can also

point out potentially hazardous conditions in the design. One of the best uses for an FMEA is during the formal design review period. It is at this time that appropriate engineering action can be taken to correct design deficiencies.

"The purpose of the FMEA is to avoid costly modifications by ferreting out latent design and operational deficiencies in early design and testing phases of component and subsystem development and to ensure a high level of achieved reliability before the initation of quantity production. An additional objective is the determination of the critical failure modes that have a serious effect on the successful completion of a mission and on the safety of the crew (and passengers)." (reference 10)

An FMEA can best be prepared by a reliability engineer in conjunction with a design engineer. The reliability engineer should work closely with the applicable designers to benefit from their knowledge of the system equipment. To be an effective tool, the FMEA should be brief, and distributed to cognizant engineering personnel for study before each design review and ensuing design freeze.

"The identification of weaknesses in the design is not the end objective (in an FMEA). From the analysis, we must determine corrective action to improve the design. The FMEA can be used to assess the relative importance of the various weaknesses isolated to permit intelligent application of effort (time and money) in selecting corrective action." (reference 11)

This section covers the following two areas of work:

a. A potential problem area analysis for the DSV electrical distribution system, and
b. A Functional Failure Modes and Effects Analysis for connectors, penetrators and junction boxes.

The potential problem area analysis which follows, consists of a logic block diagram (figure 6-13) and a number of problem area tables (tables 6-13 through 6-28), covering the various functions from the inboard to outboard component.

The Functional Failure Mode and Effects Analysis contained in this section relates specifically to the connectors, penetrators, and junction boxes discussed in this Handbook. Detail logic block diagrams are included (figures 6-19 through 6-21) as well as a number of tables listing detail failure modes (tables 6-29 through 6-32).

Examination of the subsystem/component interface logic block diagram (figure 6-19) reveals that certain components and areas are subjected to greater stresses than others during operational use of a DSV. These components include the electrical hull penetrator, the outboard harness (cabling) assembly, and the outboard electrical/electronic equipment.

The FFMEA presented here is a first cut analysis. As component hardware is identified by the designer for a specific function, three additional columns should be added to the FFMEA

tables to provide criticality ratings, meantime-between-failure (MTBF) and meantime-to-repair/restore. The latter two columns enable the user to identify the life cycles support requirements for pressure proof deep submergency electrical connectors and penetrators, and to establish a support program that will result in the least life cycle costs.

The FFMEA contained in this section relates to the following items:

a. The electrical connector plug and receptacle, figure 6-14;

b. The electrical hull penetrator, figures 6-15 and 6-17, and 6-18;

c. The outboard electrical junction box which may (or may not be mounted on the penetrator body (see figure 6-16).

Figures 6-19 through 6-21 cover the detail logic block diagrams for these components, and tables 6-29 through 6-32 are the simplified FFMEA listings.

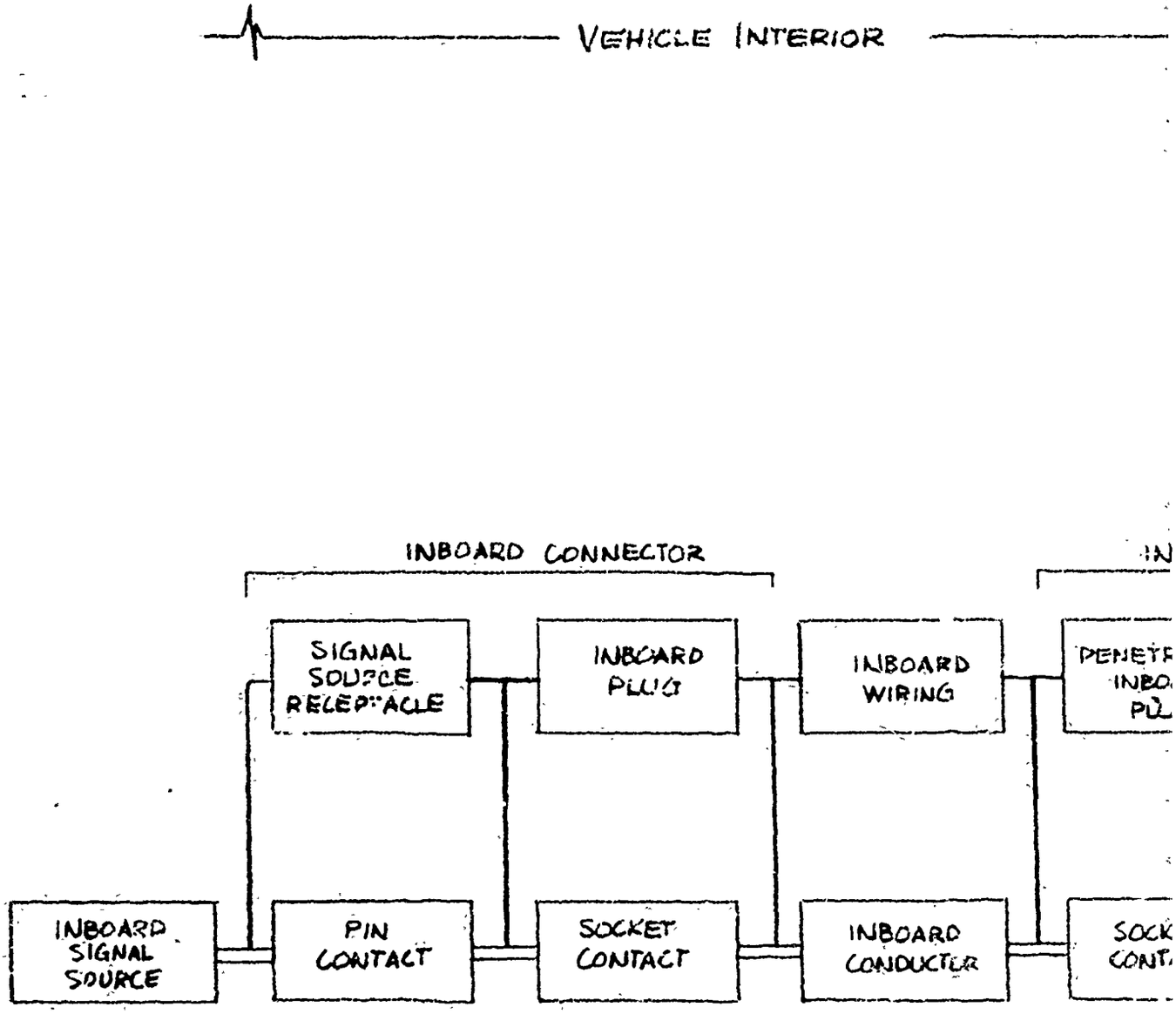
VEHICLE INTERIOR
INBOARD CONNECTOR
SIGNAL SOURCE RECEPTACLE
INBOARD PLUG
INBOARD WIRING
INBOARD SIGNAL SOURCE
PIN CONTACT
SOCKET CONTACT
INBOARD CONDUCTOR

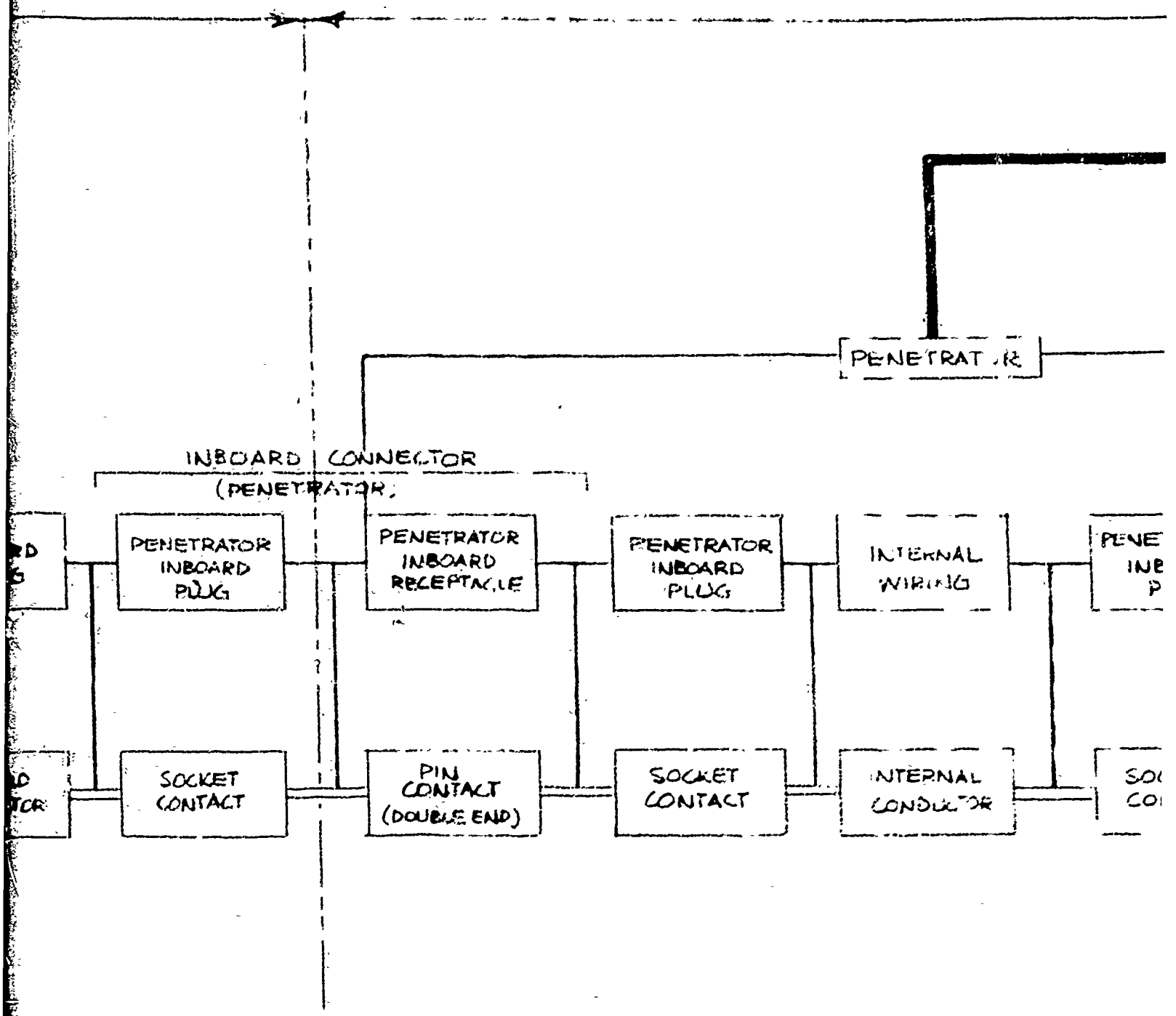
PENETRATOR
INBOARD CONNECTOR
(PENETRATOR)
PENETRATOR INBOARD PLUG
PENETRATOR INBOARD RECEPTACLE
PENETRATOR INBOARD PLUG
INTERNAL WIRING
SOCKET CONTACT
PIN CONTACT (DOUBLE END)
SOCKET CONTACT
INTERNAL CONDUCTOR

PENETRATOR

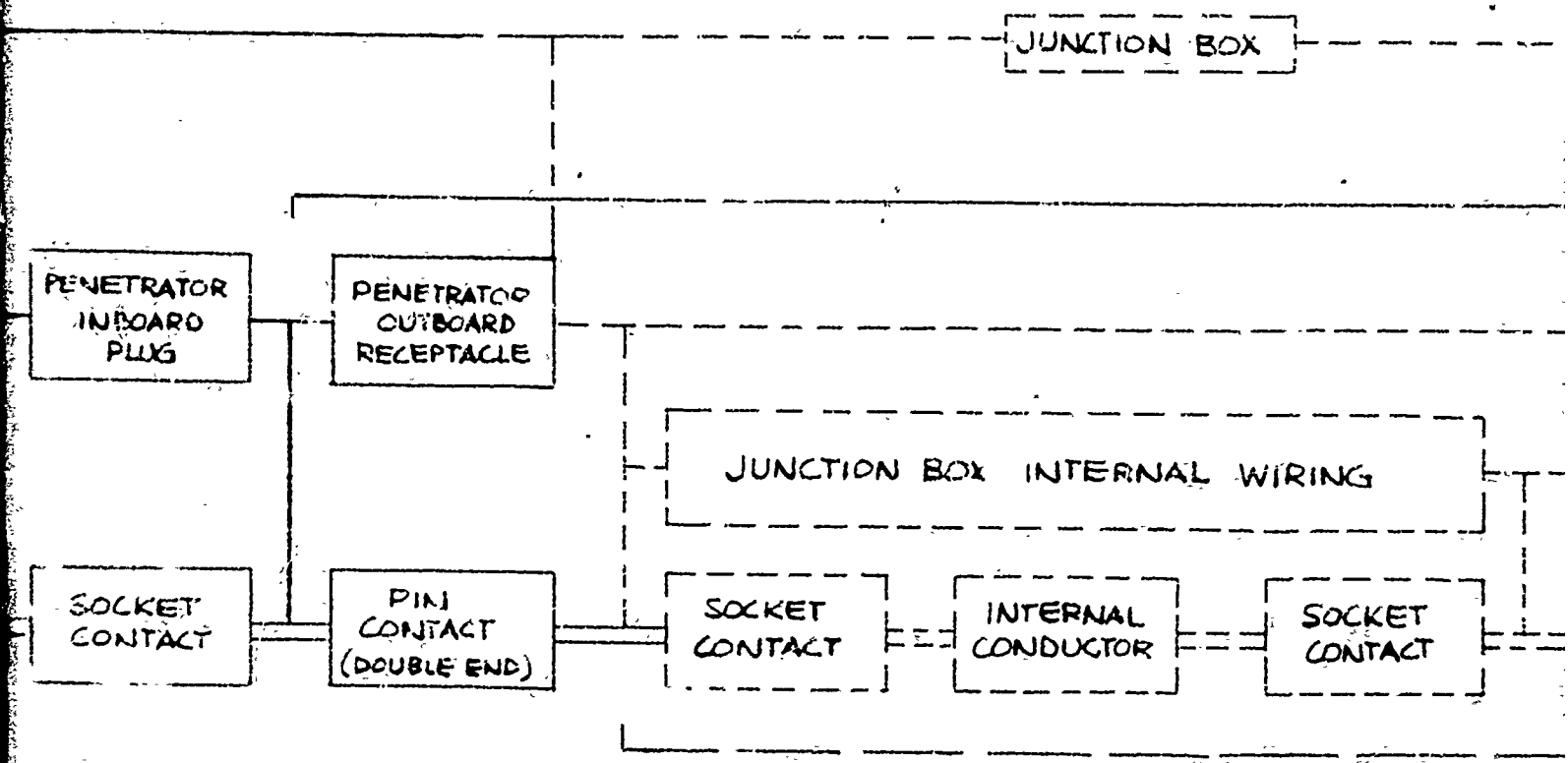
JUNCTION BOX
PENETRATOR INBOARD PLUG
PENETRATOR OUTBOARD RECEPTACLE
JUNCTION BOX INTERNAL WIRING
SOCKET CONTACT
PIN CONTACT (DOUBLE END)
SOCKET CONTACT
INTERNAL CONDUCTOR
SOCKET CONTACT

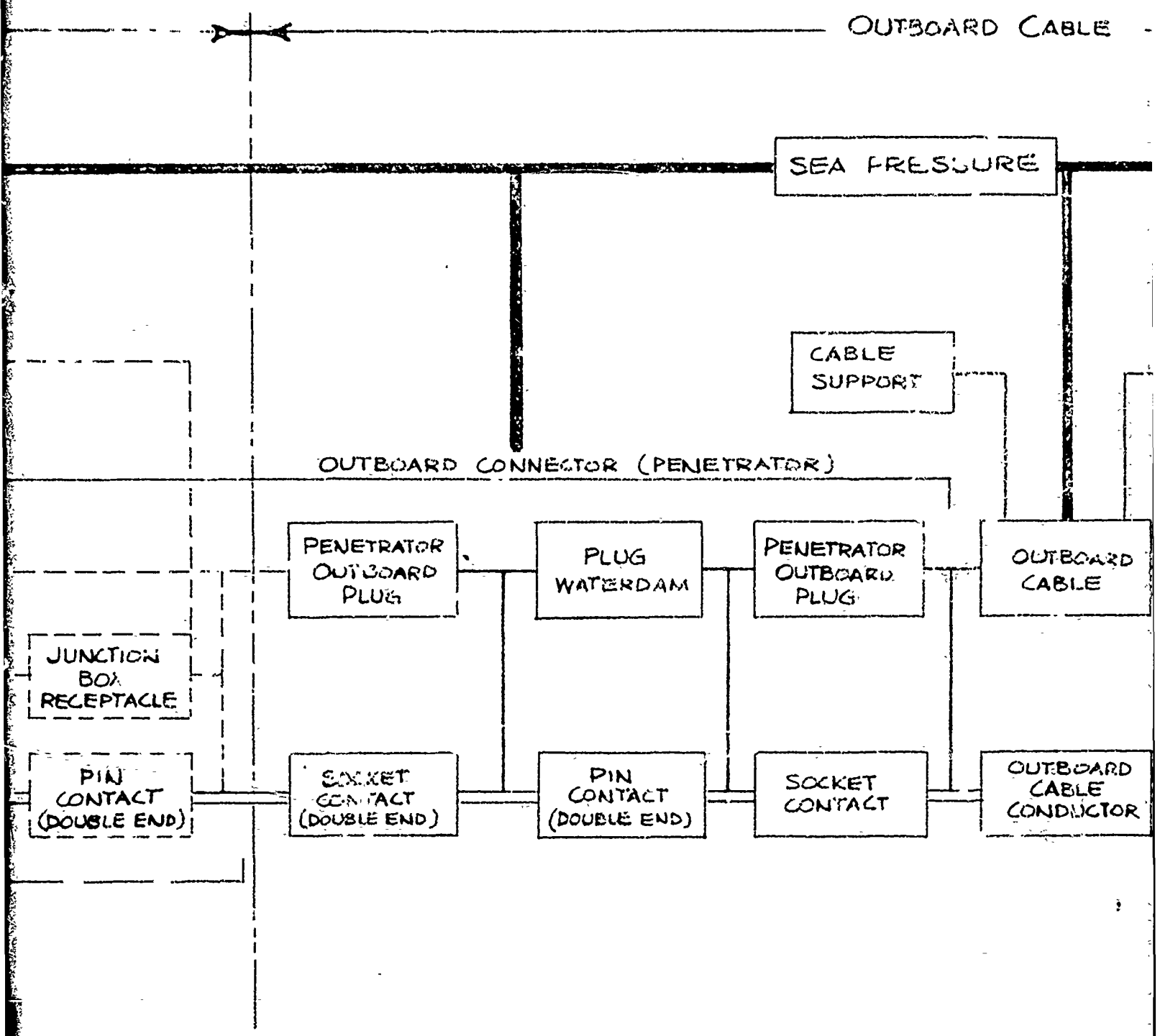
OUTBOARD CABLE
SEA PRESSURE
CABLE SUPPORT
OUTBOARD CONNECTOR (PENETRATOR)
PENETRATOR OUTBOARD PLUG
PLUG WATERDAM
PENETRATOR OUTBOARD PLUG
OUTBOARD CABLE
JUNCTION BOX RECEPTACLE
PIN CONTACT (DOUBLE END)
SOCKET CONTACT (DOUBLE END)
PIN CONTACT (DOUBLE END)
SOCKET CONTACT
OUTBOARD CABLE CONDUCTOR

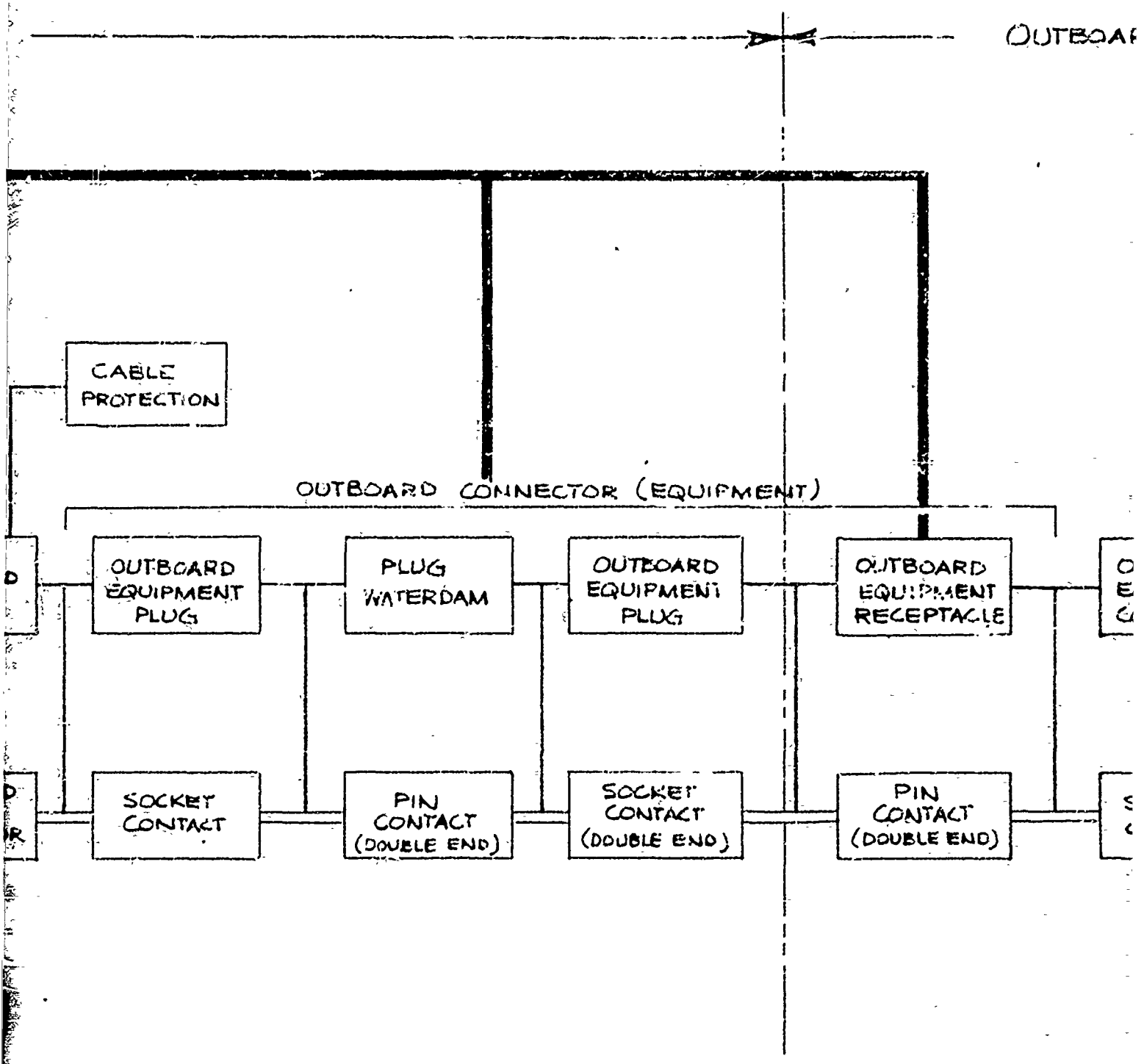
OUTBOAR
CABLE PROTECTION
OUTBOARD CONNECTOR (EQUIPMENT)
OUTBOARD EQUIPMENT PLUG
PLUG WATERDAM
OUTBOARD EQUIPMENT PLUG
OUTBOARD EQUIPMENT RECEPTACLE
SOCKET CONTACT
PIN CONTACT (DOUBLE END)
SOCKET CONTACT (DOUBLE END)
PIN CONTACT (DOUBLE END)

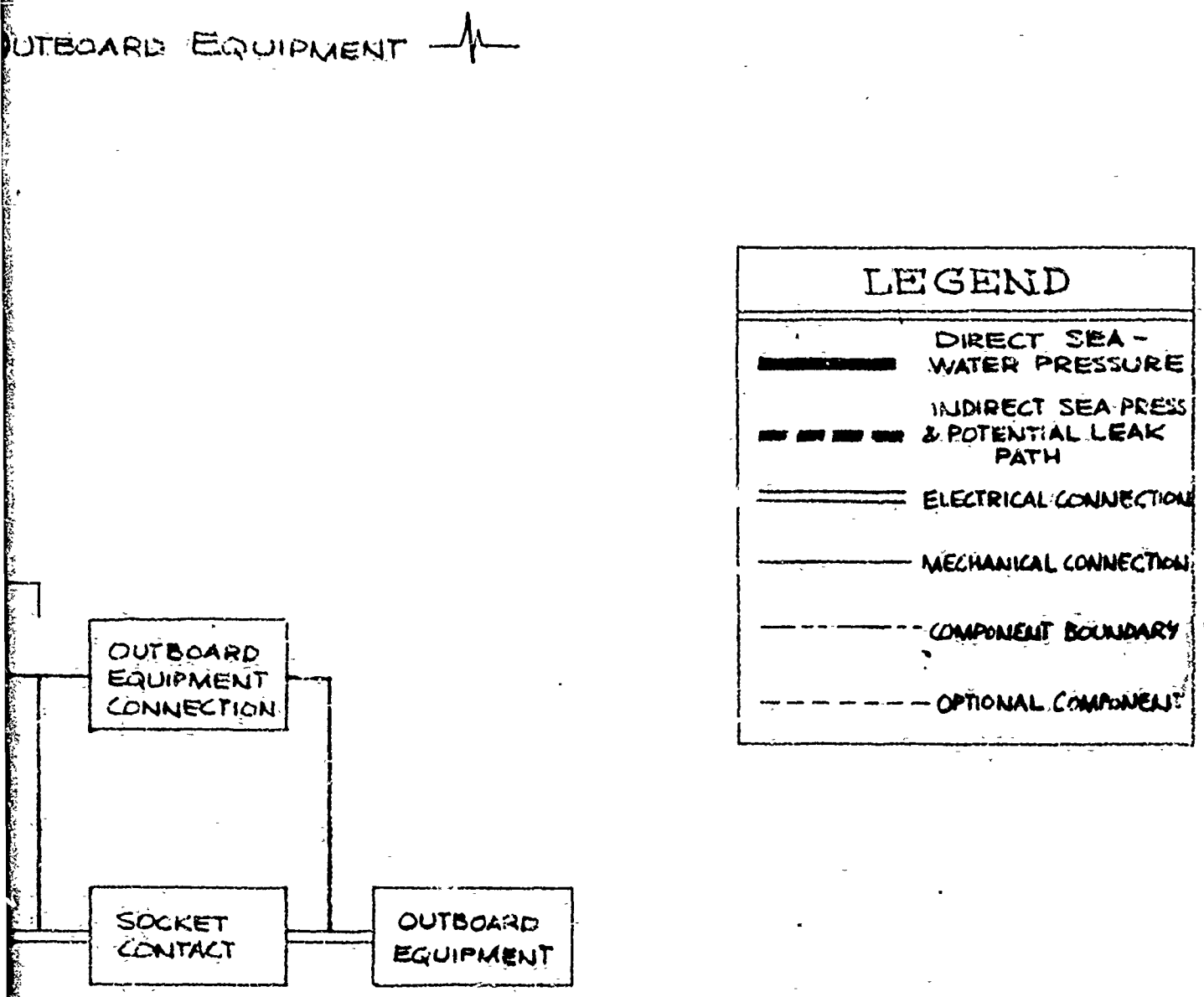

FIGURE 6-13. SIMPLIFIED LOGIC BLOCK DIAGRAM (SIGNAL SOURCE TO EXTERNAL EQUIPMENT)

PRECEDING PAGE BLANK - NOT FILMED

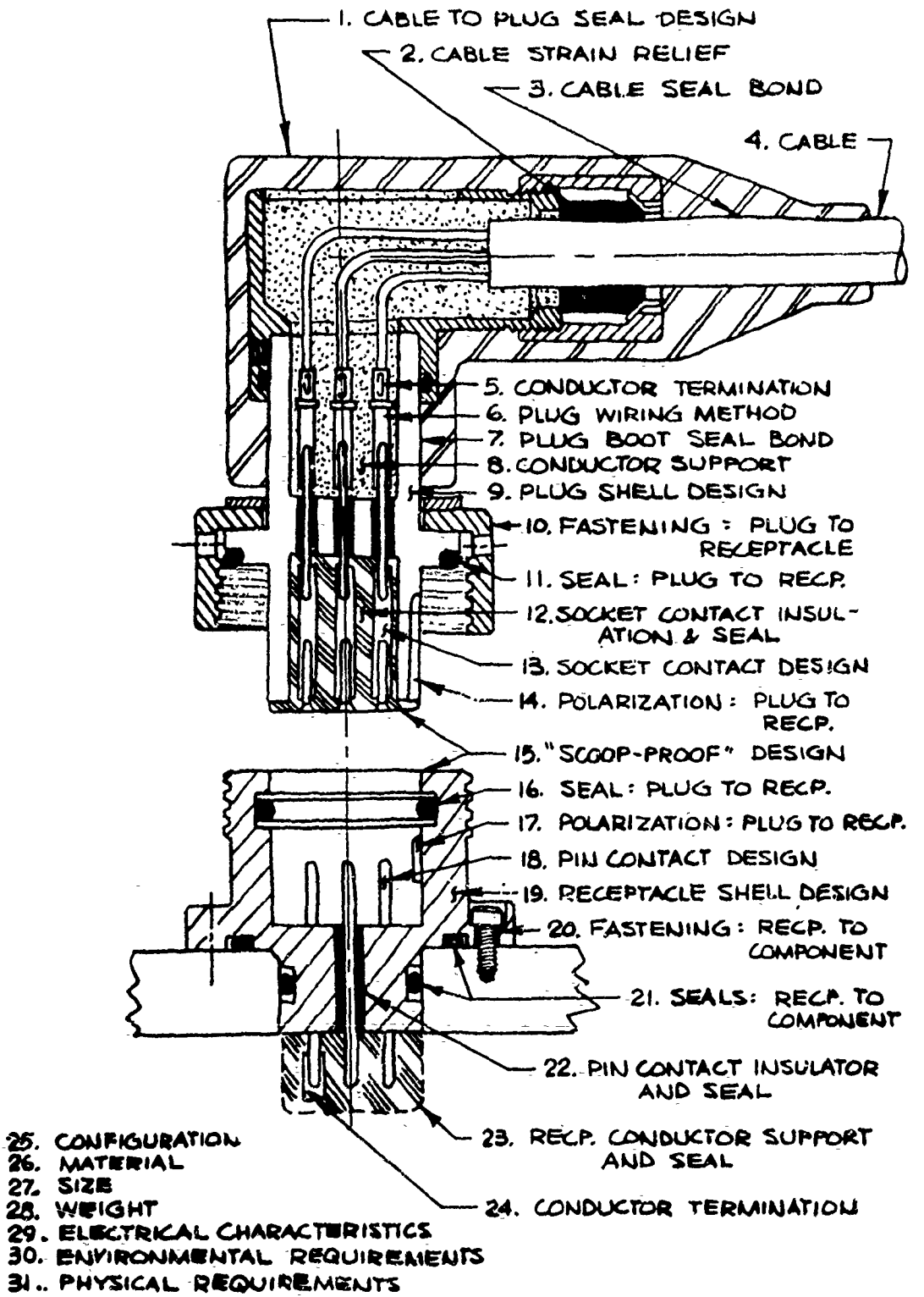

Figure 6-14. Deep Submergence Electrical Connector Design Considerations

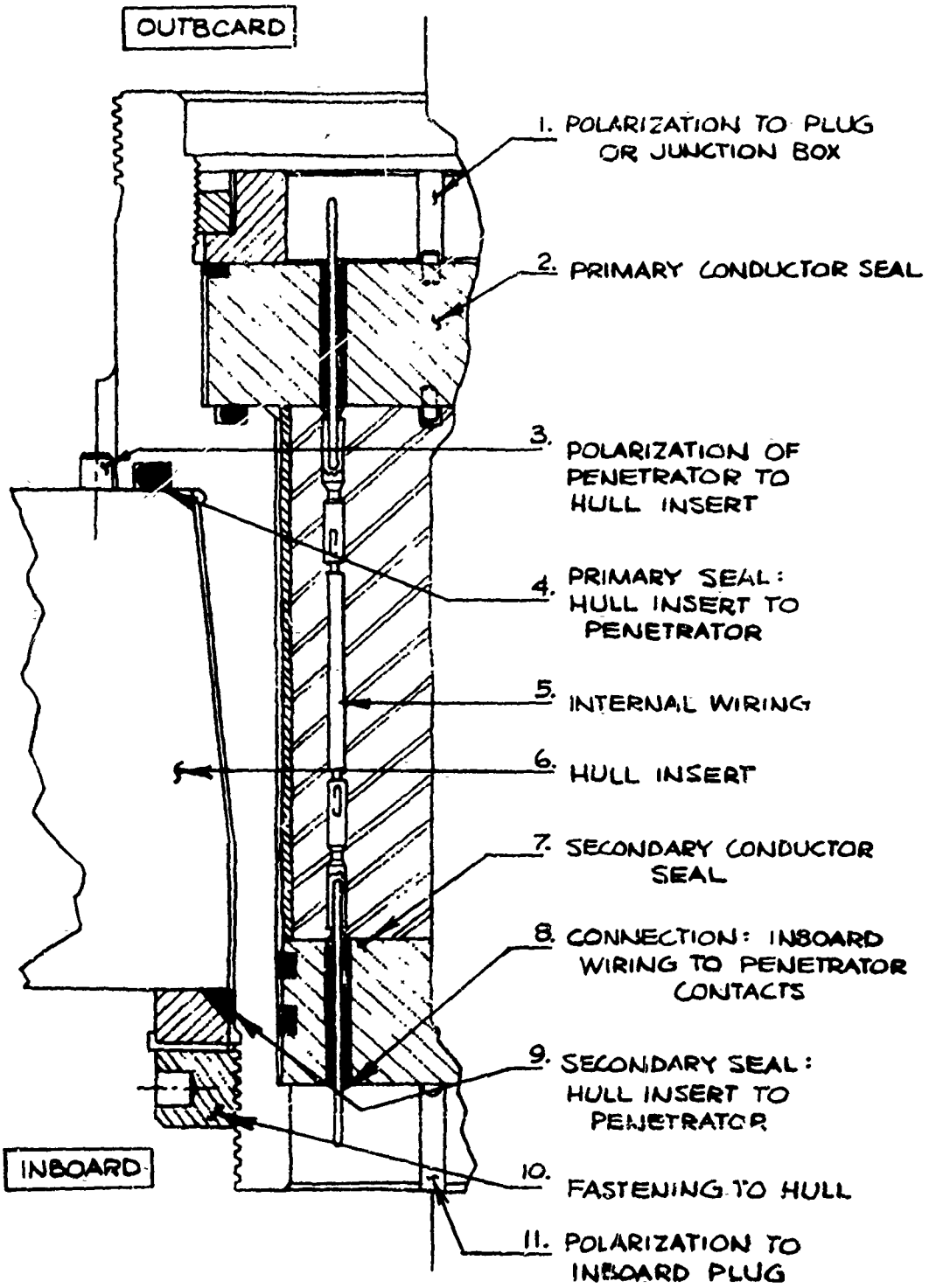

Figure 6-15. Deep Submergence Electrical Penetrator Design Considerations

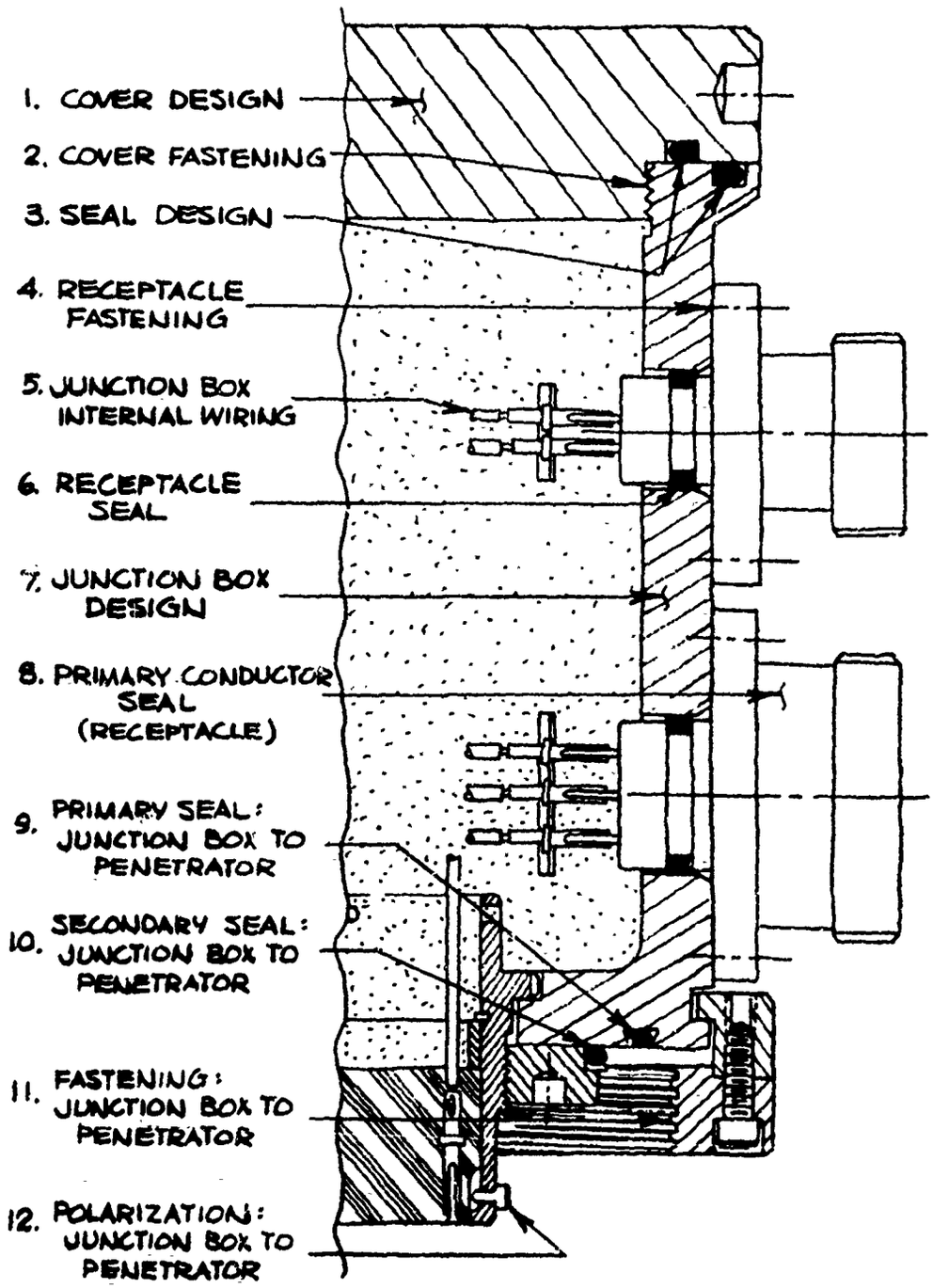

Figure 6-16. Deep Submergence Electrical Penetrator Junction Box Design Considerations

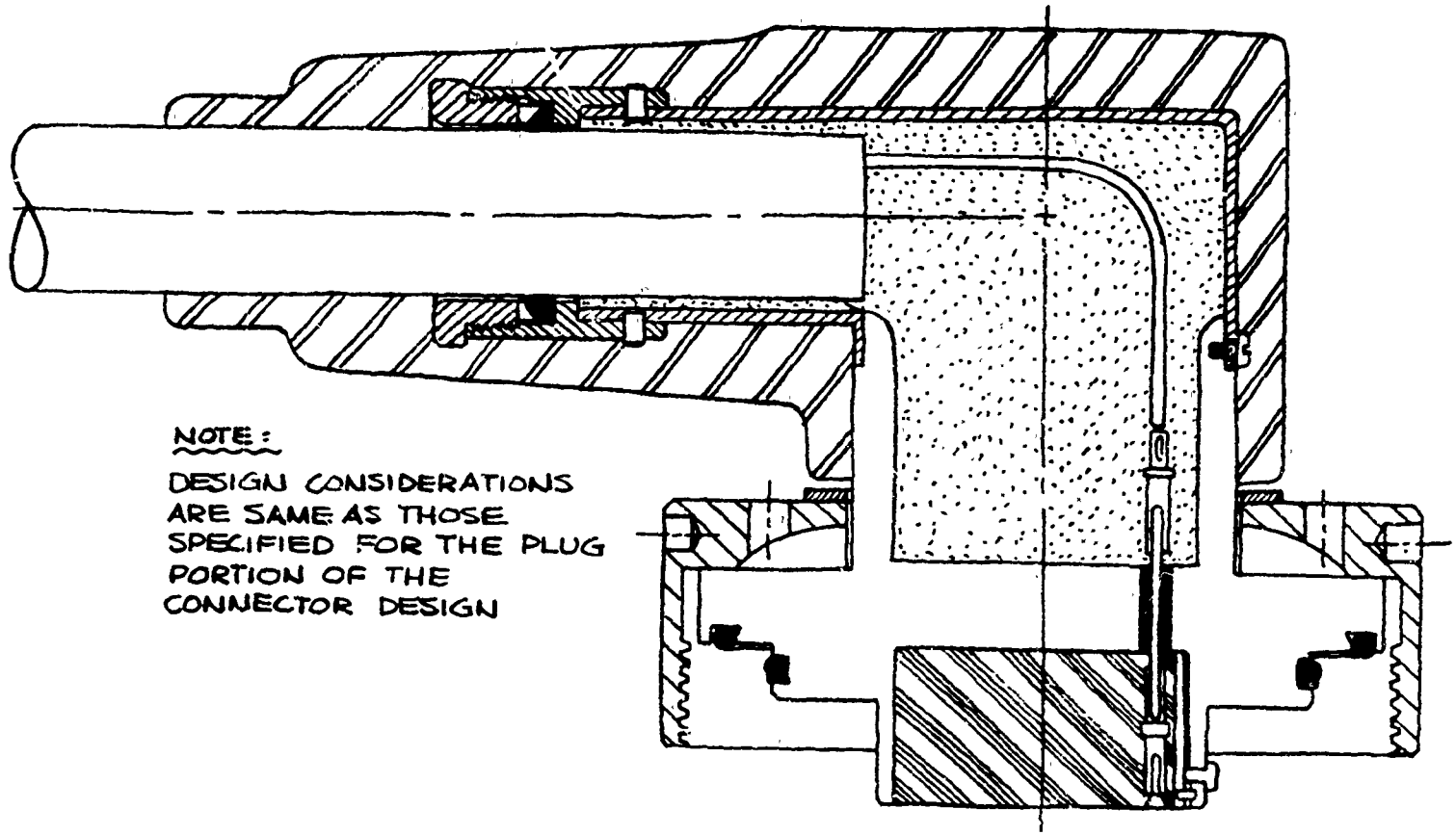

Figure 6-17. Deep Submergence Electrical Penetrator Outboard Plug Design Considerations

NOTE:

DESIGN CONSIDERATIONS ARE SAME AS THOSE SPECIFIED FOR THE PLUG PORTION OF THE CONNECTOR DESIGN EXCEPT THAT NO BOOT IS REQUIRED.

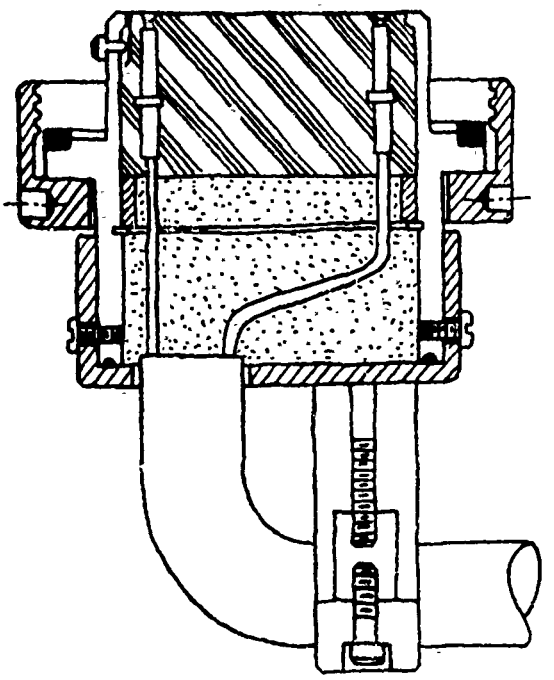

Figure 6-18. Deep Submergence Electrical Penetrator Inboard Plug Design Considerations

PRECEDING PAGE BLANK - NOT FILMED

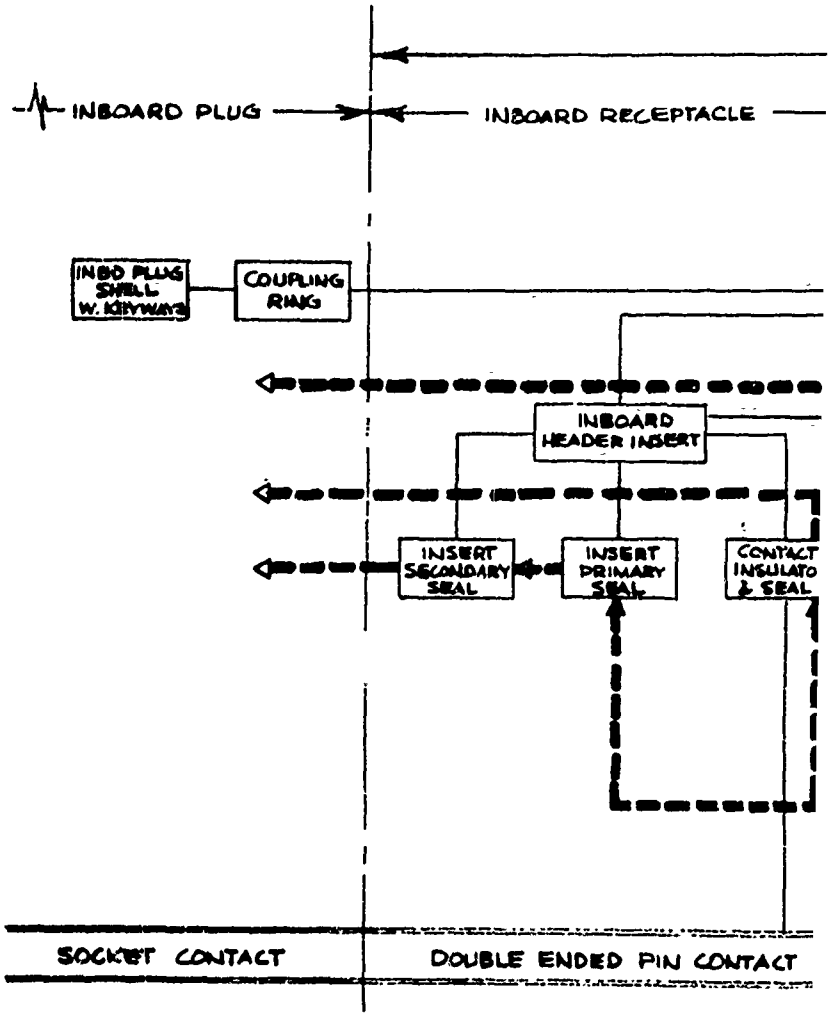

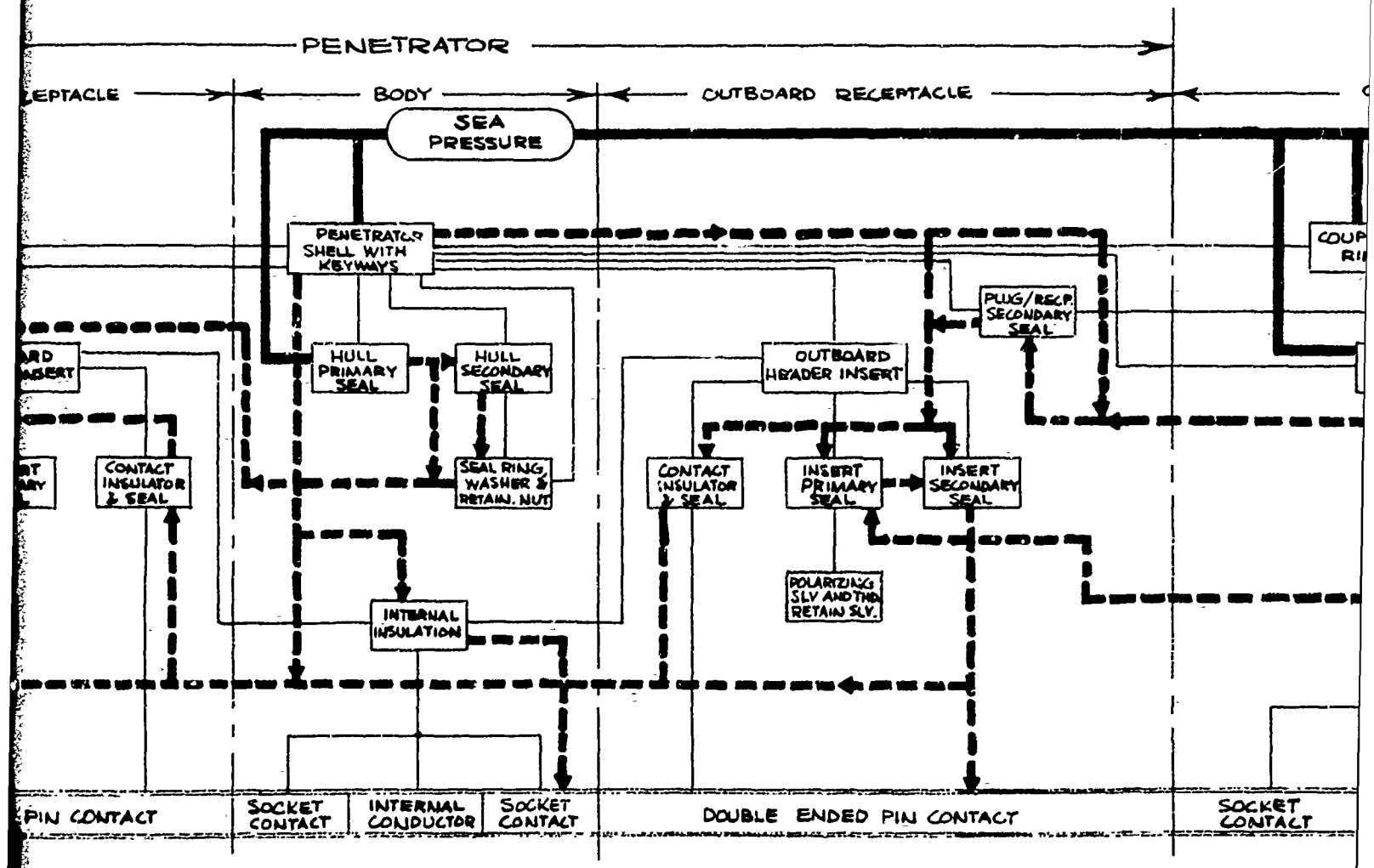
PENETRATOR
EPTACLE
BODY
OUTBOARD RECEPTACLE
SEA PRESSURE
PENETRATOR SHELL WITH KEYWAYS
HULL PRIMARY SEAL
HULL SECONDARY SEAL
SEAL RING, WASHER & RETAIN. NUT
CONTACT INSULATOR & SEAL
INTERNAL INSULATION
OUTBOARD HEADER INSERT
PLUG/RECP. SECONDARY SEAL
CONTACT INSULATOR & SEAL
INSERT PRIMARY SEAL
INSERT SECONDARY SEAL
POLARIZING SLV AND THD. RETAIN SLV.
PIN CONTACT
SOCKET CONTACT
INTERNAL CONDUCTOR
SOCKET CONTACT
DOUBLE ENDED PIN CONTACT
SOCKET CONTACT

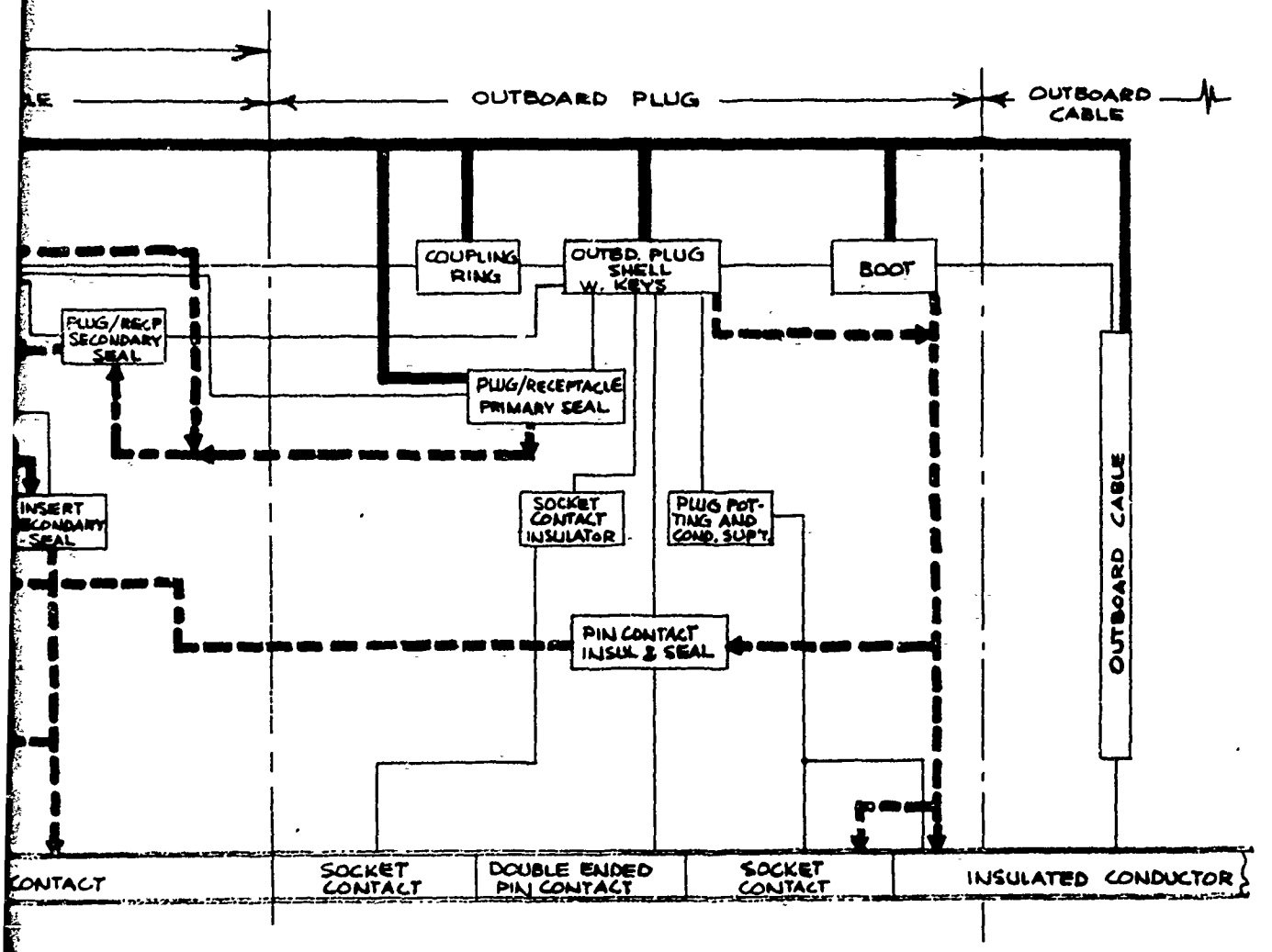

Figure 6-19. Detail Logic Block Diagram -

Hull Penetrator with Inboard and Single Outboard Plug

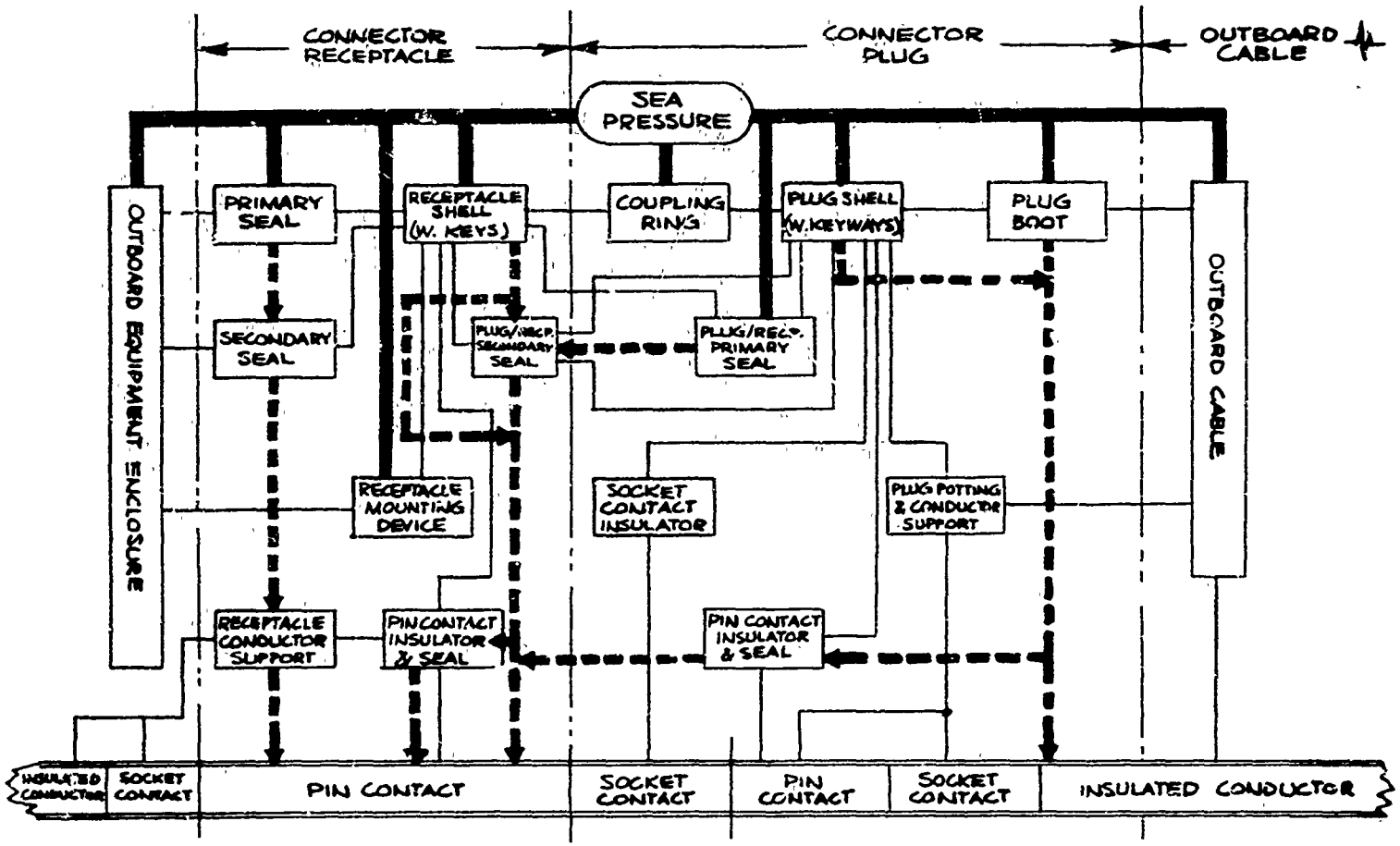

Figure 6-20. Detail Logic Block Diagram - Outboard Connector/Equipment Interface

PRECEDING PAGE BLANK - NOT FILMED

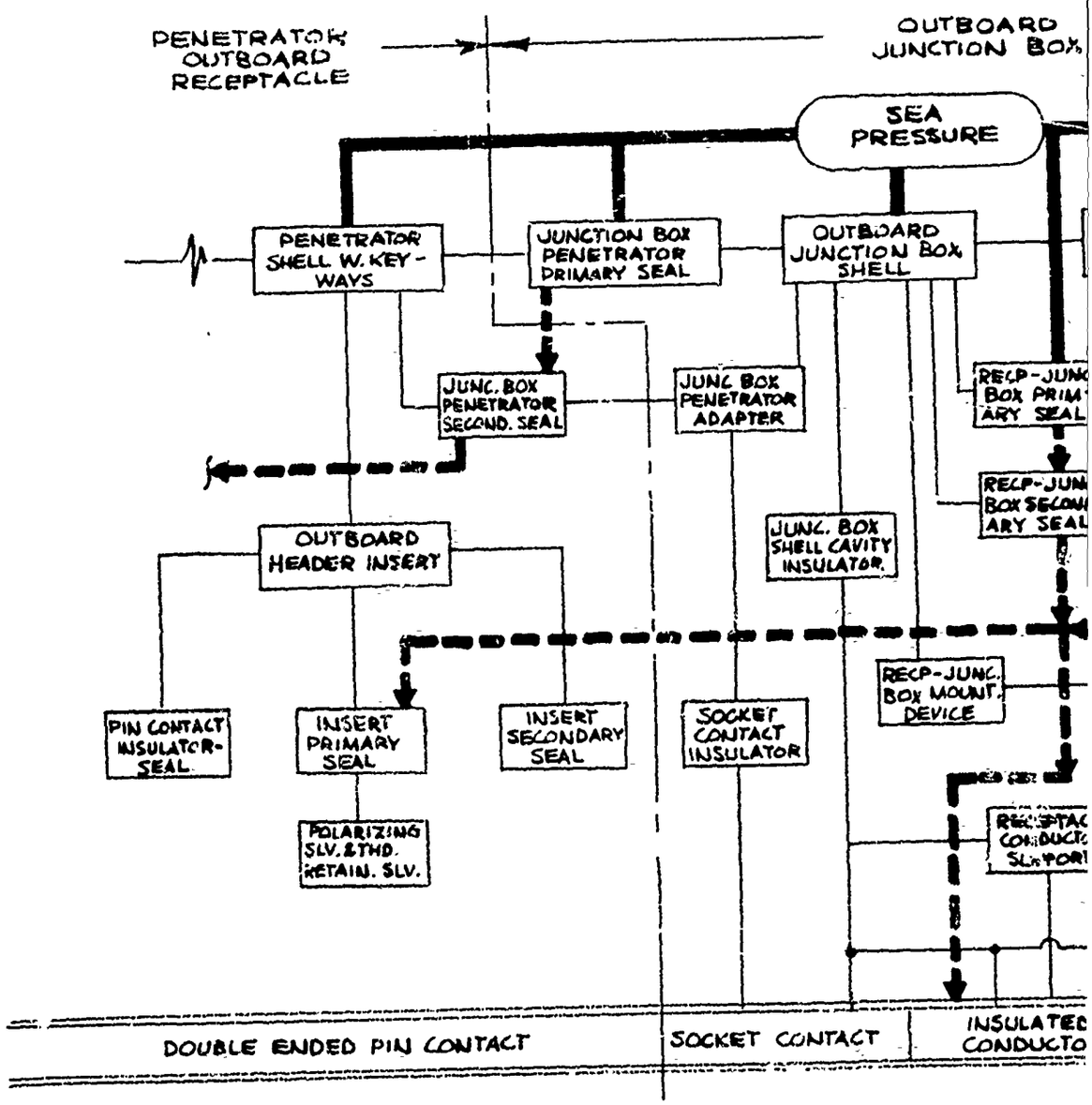

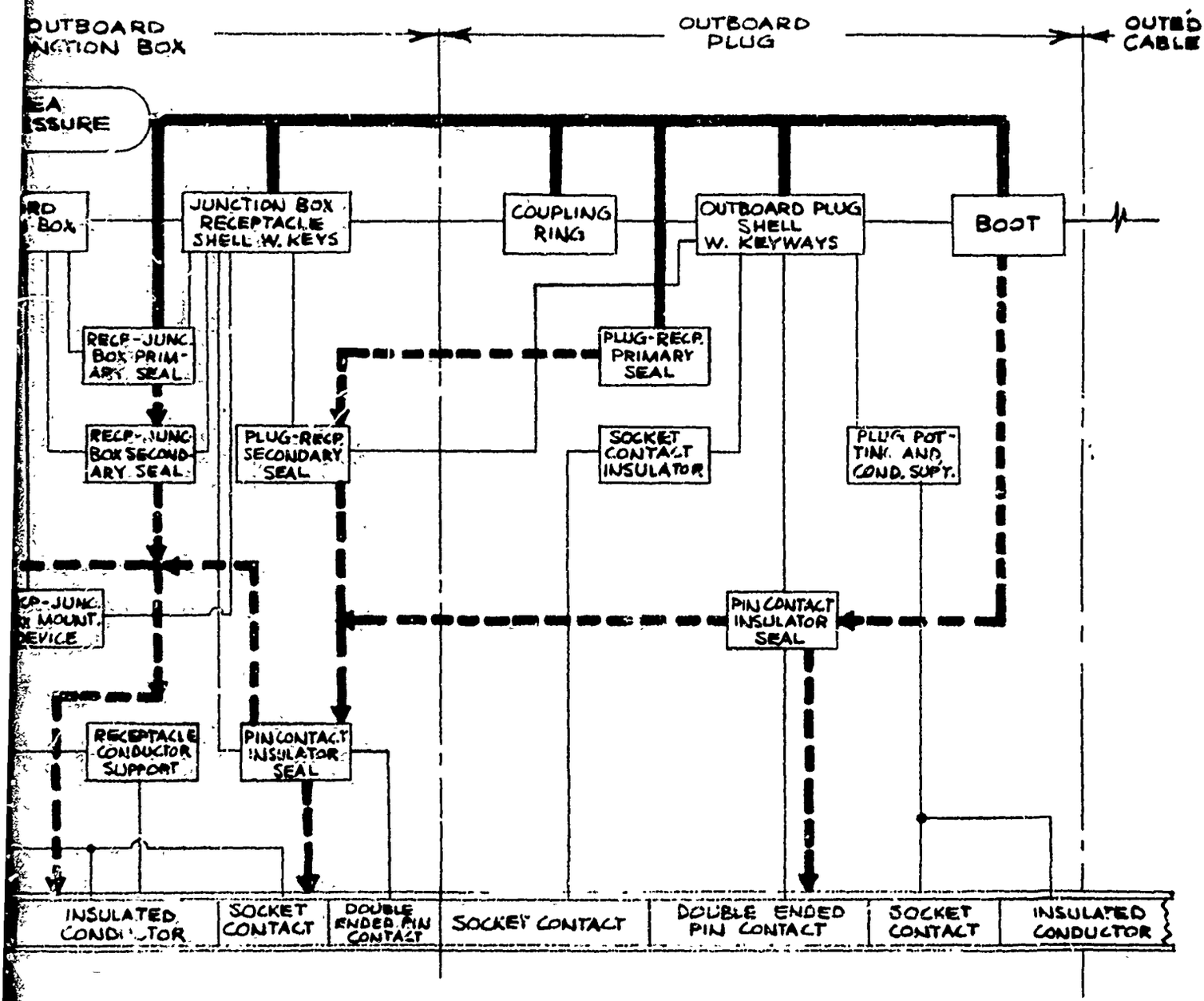

Figure 6-21. Detail Logic Block Diagram - Outboard Junction Box

PRECEDING PAGE BLANK - NOT FILMED

Table 6-13. Inboard Cabling/Inboard Penetrator Plug (Interface)

Potential Problem Area Analysis

FAILURE MODE IDENTIFICATION	FAILURE MODE/CAUSE					
	INHERENT		INDUCED			
	Mgf/Design Deficiency	Material Fatigue	Instl/assy Deficiency	Maintenance Deficiency	Excessive Operational Demands	Rough Handling
1. Improper crimp joint between socket contact and inboard conductors			X	X		
2. Open circuit between socket contact and conductor						X
3. Insulation breakdown due to circuit overloading					X	
4. Conductor insulation breakdown due to foreign particles in insulator material	X		X	X		

Table 6-14. Inboard (Penetrator) Plug

Potential Problem Area Analysis

FAILURE MODE IDENTIFICATION	FAILURE MODE/CAUSE					
	INHERENT		INDUCED			
	Mgf/Design Deficiency	Material Fatigue	Instl/assy Deficiency	Maintenance Deficiency	Excessive Operational Demands	Rough Handling
1. Insulation breakdown due to water/moisture entry into plug internals			X	X		X
2. Insulation breakdown due to foreign particles in insulator internals	X		X	X		
3. Detachment of plug from penetrator due to explosion at plug/receptacle interface due to water entry past plug seals (short circuit fault current)	X		X	X		
4. Socket contacts not properly inserted in insulator	X		X	X		
5. Socket contacts not located in proper center lines	X					X
6. Open circuit due to damaged or missing socket contact spring	X	X	X	X		X
7. Open circuit due to potting compound in socket contact	X		X	X		
8. Out of tolerance plug shell dimensions	X					

Table 6-15. Inboard Penetrator Plug/Inboard Penetrator Receptacle (Interface)

Potential Problem Area Analysis

FAILURE MODE IDENTIFICATION	FAILURE MODE/CAUSE					
	INHERENT		INDUCED			
	Mgf/Design Deficiency	Material Fatigue	Instl/assy Deficiency	Maintenance Deficiency	Excessive Oper-ational Demands	Rough Handling
1. Coupling ring or receptacle threads damaged/ improperly machined	X		X			X
2. Loosening of coupling ring due to external shock/ vibration	X		X		X	
3. Interface corrosion of plug shell/coupling ring/ receptacle shell	X	X		X		
4. Improperly located or sized plug shell key/ receptacle shell keyway	X					
5. Improper/overage gasket material	X	X	X	X		
6. Missing plug shell gasket			X	X		
7. Damaged plug shell gasket			X	X		X
8. Loss of plug/receptacle seal due to foreign particles at interface			X	X		
9. Short circuit due to foreign particles at plug receptacle interface			X	X		
10. Open circuit due to oversize socket contacts	X		X			
11. Open circuit due to undersize pin contacts	X		X			
12. Open circuit due to contaminants in socket contact cavity			X			
13. Open circuit due to missing/damaged socket contact springs			X			
14. Detachment of plug from receptacle due to explo-sion at plug/receptacle interface as a result of water entry past plug seal (short circuit fault current)	X		X	X		

Table 6-16. Inboard Penetrator Receptacle

Potential Problem Area Analysis

FAILURE MODE IDENTIFICATION	FAILURE MODE/CAUSE					
	INHERENT		INDUCED			
	Mgf/Design Deficiency	Material Fatigue	Instl/assy Deficiency	Maintenance Deficiency	Excessive Operational Demands	Rough Handling
1. Short circuit due to contamination of pin contact gasket	X		X	X		
2. Insulation breakdown due to moisture accumulation within receptacle	X	X	X	X		
3. Improper mating due to pin contact gasket thickness over tolerance	X					
4. Open circuit due to undersize diameter pin contact	X					
5. Pin contacts not located in proper centerline thus preventing proper plug mating	X					X
6. Bent pin contacts preventing proper mating with plugs			X	X		X
7. Cracked or defective pin contact glass insulator	X	X	X	X	X	X
8. Improperly bonded pin contact gasket thus lowering insulation resistance	X					
9. Contaminated/corroded pin contact plating causing defective electrical contact	X	X				
10. Out of tolerance receptacle shell dimensions	X					
11. Damaged/out of tolerance receptacle keyways	X		X	X		
12. Damaged receptacle seal surfaces						X
13. Overloaded circuit leading to insulation breakdown of pin contact					X	
14. Pin contact insulation breakdown due to contaminated material	X					
15. Fatigue/collapse of receptacle web section due to hydrostatic pressure	X	X			X	

Table 6-16. (cont'd)

Potential Problem Area Analysis

FAILURE MODE IDENTIFICATION	FAILURE MODE/CAUSE					
	INHERENT		INDUCED			
	Mgf/Design Deficiency	Material Fatigue	Instl/assy Deficiency	Maintenance Deficiency	Excessive Operational Demands	Rough Handling
16. Seawater entry into hull due to improper seal of pin contacts to web section (following failure of primary conductor seals)	X					
17. Improper or overage primary/secondary O-ring material	X		X	X		
18. Damaged primary/secondary receptacle - penetrator O-rings			X	X		X
19. Missing primary/secondary receptacle - penetrator O-rings			X	X		
20. Improper O-rings groove design	X		X	X		X
21. Loss of receptacle - penetrator seal due to damaged O-ring seal surfaces and grooves.						
22. Collapse of penetrator shell due to hydrostatic pressure on web section	X	X			X	

Tabel 6-17. Inboard Penetrator Receptacle/Penetrator Wiring (Interface)

Potential Problem Area Analysis

FAILURE MODE IDENTIFICATION	FAILURE MODE/CAUSE					
	INHERENT		INDUCED			
	Mgf/Design Deficiency	Material Fatigue	Instl/assy Deficiency	Maintenance Deficiency	Excessive Operational Demands	Rough Handling
1. Improper crimp joint between wire and contact			X	X		
2. Open circuit between wire and receptacle contact	X		X	X		
3. Conductor insulation breakdown due to foreign particles in insulator material	X		X	X		
4. Insulation breakdown due to circuit overloading					X	
5. Contaminated/corroded contact plating	X					
6. Damaged/missing socket contact spring	X	X	X	X		X

Table 6-18. Penetrator Wiring

Potential Problem Area Analysis

FAILURE MODE IDENTIFICATION	FAILURE MODE/CAUSE					
	INHERENT		INDUCED			
	Mgt/Design Deficiency	Material Fatigue	Instl/assy Deficiency	Maintenance Deficiency	Excessive Oper-ational Demands	Rough Handling
1. Conductor insulation breakdown due to current overload conditions					X	
2. Insulation breakdown due to contaminated potting materials	X					
3. Potting material or pin contact insulation break-down due to moisture accumulation at web section interfaces	X		X	X		
4. Open circuit due to undersize diameter pin contact	X					
5. Open circuit due to missing or damaged socket contact springs			X	X		X
6. Damaged pin contact insulators			X	X		X
7. Open circuit due to insulating material at pin-socket contact interface	X		X	X		
8. Open circuit due to use of oversize socket contact	X		X	X		
9. Open circuit due to improper crimp joint between conductor and socket contact	X		X			
10. Explosion in penetrator cavity as a result of water entry into cavity (short circuit fault current)	X		X			

Table 6-19. Penetrator Wiring/Outboard Penetrator Receptacle (Interface)

Potential Problem Area Analysis

FAILURE MODE IDENTIFICATION	FAILURE MODE/CAUSE					
	INHERENT		INDUCED			
	Mgf/Design Deficiency	Material Fatigue	Instl/assy Deficiency	Maintenance Deficiency	Excessive Operational Demands	Rough Handling
1. Improper crimp joint between wire and contact			X	X		
2. Open circuit between wire and receptacle contact	X		X	X		
3. Conductor insulation breakdown due to circuit overloading					X	
4. Conductor insulation breakdown due to foreign particles in insulator material	X		X	X		
5. Contaminated/corroded contact plating	X					
6. Damaged/missing socket contact spring	X	X	X	X		X

Table 6-20. Outboard Penetrator Receptacle

Potential Problem Area Analysis

FAILURE MODE IDENTIFICATION	FAILURE MODE/CAUSE					
	INHERENT		INDUCED			
	Mgf/Design Deficiency	Material Fatigue	Instl/assy Deficiency	Maintenance Deficiency	Excessive Operational Demands	Rough Handling
1. Withstanding voltage breakdown of pin contact insulation due to circuit overloading					X	
2. Pin contact insulation breakdown due to contaminated material	X					
3. Open circuit due to undersize pin contact	X					
4. Insulation breakdown due to water/moisture accumulation at pin contact web face	X		X	X		
5. Insulation breakdown due to contaminated pin contact face gasket	X		X	X		X
6. Pin contact gasket out of tolerance thickness preventing proper plug mating	X					
7. Open circuit due to contaminated pin contact plating	X					
8. Open circuit due to misaligned pin contacts	X					X
9. Insulation breakdown due to improperly bonded pin contact gasket	X		X			
10. Pin contact gasket insulation breakdown due to use of improper cleaning solvents			X	X		
11. Out of tolerance dimensions on penetrator shell (receptacle) and polarizing ring	X					
12. Undersize, oversize, or damaged receptacle keyways preventing proper contact alignment	X		X	X		X
13. Fatigue/collapse of penetrator shell (receptacle) due to hydrostatic pressure	X	X			X	
14. Seawater entry into penetrator internals due to improper seal of pin contacts to shell - (following failure of plug to receptacle seals)						

Table 6-21. Outboard Penetrator Receptacle/Penetrator (Interface)

Potential Problem Area Analysis

FAILURE MODE IDENTIFICATION	FAILURE MODE/CAUSE					
	INHERENT		INDUCED			
	Mgf/Design Deficiency	Material Fatigue	Instl/assy Deficiency	Maintenance Deficiency	Excessive Operational Demands	Rough Handling
1. Damage of receptacle to penetrator fastening mechanism due to external shock/vibration forces	X	X	X	X		
2. Water leakage into penetrator due to loss or damage to receptacle-to-penetrator seals	X	X	X	X		X
3. Loss of receptacle to component seals due to contaminated or damaged O-ring seal surfaces and grooves			X	X		X
4. Improper O-ring groove design	X					
5. Missing primary - secondary receptacle to penetrator O-rings			X	X		
6. Material incompatability of receptacle and penetrator shell	X					
7. Material incompatability of receptacle/penetrator shells with mounting screws	X		X	X		
8. Fracture of receptacle shell mounting flange	X	X			X	X
9. Loosening of mounting screws caused by external shock forces	X		X	X	X	
10. Improper or overage primary/secondary O-ring materials	X		X	X		
11. Detachment of receptacle from penetrator due to explosion at rear face of receptacle due to short circuit fault current	X		X	X	X	
12. Detachment of receptacle from penetrator due to impact forces on connector assembly	X				X	

Table 6-22. Outboard Penetrator Receptacle/Outboard Penetrator Plug (Interface)

Potential Problem Area Analysis

FAILURE MODE IDENTIFICATION	FAILURE MODE/CAUSE					
	INHERENT		INDUCED			
	Mgf/Design Deficiency	Material Fatigue	Instl/assy Deficiency	Maintenance Deficiency	Excessive Operational Demands	Rough Handling
1. Detachment of plug from receptacle due to explosion at plug/receptacle interface due to seawater entry past primary and secondary seals (short circuit fault current)	X		X	X		
2. Loss of pin contact receptacle seals due to explosion at plug/receptacle interface due to seawater entry past primary and secondary seals (short circuit fault current)	X		X	X		
3. Bent pin contact preventing proper mating of receptacle and plug	X		X	X		X
4. Oversize thickness of pin contact gasket preventing proper mating of plug to receptacle	X					
5. Short circuit due to contamination of pin contact gasket	X		X	X		
6. Open circuit due to oversize socket contact or undersize pin contact	X		X			
7. Open circuit due to potting compound or other foreign material inside socket contacts	X		X	X		
8. Improper electrical contact due to contamination or corroded pin or socket contact	X	X				
9. Fatigue and collapse of receptacle or plug shell	X	X				
10. Deficient mating of plug-to-receptacle due to plug/receptacle out of tolerance dimensions	X					
11. Improper plug-receptacle mating due to dislodged, improper size or poorly aligned receptacle keys	X					X
12. Damaged, improperly located or sized keyway in plug shell preventing proper mating	X			X		X

Table 6-22. (cont'd)

Potential Problem Area Analysis

FAILURE MODE IDENTIFICATION	FAILURE MODE/CAUSE					
	INHERENT		INDUCED			
	Mgf/Design Deficiency	Material Fatigue	Instl/assy Deficiency	Maintenance Deficiency	Excessive Operational Demands	Rough Handling
13. Improper or overage primary/secondary O-ring material	X		X	X		
14. Damaged primary/secondary O-ring gaskets			X	X		X
15. Missing primary/secondary O-rings			X	X		
16. Loss of plug/receptacle seal due to deformities of O-ring grooves	X		X	X		X
17. Loss of plug/receptacle seal due to contaminated O-ring surfaces			X	X		
18. Material incompatability of plug and receptacle shell interface	X					
19. Material incompatability of coupling ring/plug shell/receptacle shell	X					
20. Damaged threads in coupling ring or receptacle shell	X		X	X		X
21. Excessive torque on coupling ring causing receptacle to be torn from mounting surface			X			
22. Coupling ring/receptacle shell out of tolerance dimensions	X					
23. Loosening of coupling ring due to external shock or vibration forces	X		X	X	X	
24. Damaged coupling ring preventing proper plug mating			X	X		X
25. Improper size or damaged backup rings preventing proper plug mating	X		X	X		X
26. Corrosion of plug coupling ring/receptacle shell preventing proper mating	X					

Table 6-23. Outboard Penetrator and Component Plug

Potential Problem Area Analysis

FAILURE MODE IDENTIFICATION	FAILURE MODE/CAUSE					
	INHERENT		INDUCED			
	Mgf/Design Deficiency	Material Fatigue	Instl/assy Deficiency	Maintenance Deficiency	Excessive Operational Demands	Rough Handling
1. Withstanding voltage breakdown of pin contact insulation due to circuit overloading					X	
2. Pin contact insulation breakdown due to contaminated material	X					
3. Open circuit due to undersize diameter pin contact	X					
4. Insulation breakdown due to water/moisture accumulation at pin contact web face	X		X	X		
5. Insulation breakdown due to contaminated socket contact insulators	X		X	X		X
6. Socket contact/pin contact out of alignment preventing proper mating	X					
7. Open circuit due to contaminated contact plating	X					
8. Out of tolerance dimensions on receptacle shell	X					
9. Fatigue or collapse of plug shell due to hydrostatic pressure	X	X			X	
10. Damaged, improperly located or sized keyway in in plug shell preventing proper mating	X		X			X
11. Plug shell damage in area of secondary (receptacle) O-ring	X		X	X		X
12. Damage to plug thrust washer			X	X		
13. Socket contact not properly inserted in insulator			X	X		
14. Seawater entry into plug - receptacle cavity due to improper seal of pin contacts to plug shell (following seawater entry into rear of shell)	X					
15. Electrical insulator failure due to use of improper cleaning solvents			X	X		

Table 6-24. Outboard Penetrator and Component Plug/Outboard Cable (Interface)

Potential Problem Area Analysis

FAILURE MODE IDENTIFICATION	FAILURE MODE/CAUSE					
	INHERENT		INDUCED			
	Mgf/Design Deficiency	Material Fatigue	Instl/assy Deficiency	Maintenance Deficiency	Excessive Operational Demands	Rough Handling
1. Open circuit due to undersize diameter pin contact	X					
2. Open circuit due to missing or damaged socket contact spring			X	X		X
3. Open circuit due to contaminated socket contact at pin contact interface	X		X	X		
4. Open circuit due to improper crimp joint between conductor and socket contact	X		X			
5. Open circuit due to use of oversize socket contact						
6. Insulation breakdown due to circuit overloading					X	
7. Insulation material breakdown due to use of contaminated materials	X		X	X		
8. Short circuit fault current due to water entry into rear of plug as a result of damaged cable jacket or improper plug boot bond to shell or jacket	X		X			X
9. Conductor fatigue in plug internals due to hydrostatic pressure	X	X			X	
10. Open circuit in conductors at socket contact interface due to nicked conductor strands at assembly (eventually caused by hydrostatic pressure)			X			
11. Material imperfection/impurities in plug boot	X		X			
12. Improper/poor bond of plug boot to plug shell	X		X	X		
13. Improper/poor bond of plug boot to cable	X		X			
14. Puncture leaks developing in plug boot due to voids/compressible areas of boot material	X	X	X	X		
15. Degradation of physical properties of plug boot material due to seawater exposure	X	X				

Table 6-25. Penetrator/Pressure Hull (Interface)

Potential Problem Area Analysis

FAILURE MODE IDENTIFICATION	FAILURE MODE/CAUSE					
	INHERENT		INDUCED			
	Mgf/Design Deficiency	Material Fatigue	Instl/assy Deficiency	Maintenance Deficiency	Excessive Operational Demands	Rough Handling
1. Defective threads (machining) in penetrator retaining nut/operator shell	X					X
2. Material incompatability at retainer nut/penetrator shell interface	X					
3. Penetrator shell/retainer nut/washer/seal ring with-out of tolerance dimensions	X					
4. Loosening of retainer nut caused by external shock/vibration forces	X		X	X	X	
5. Penetrator retainer nut fracture	X	X				
6. Corrosion of pressure hull/penetrator shell due to material incompatability	X	X			X	
7. Washer fracture	X	X				
8. Seal ring fracture	X	X				
9. Improper or overage primary/secondary O-ring material	X		X	X		
10. Damaged primary/secondary penetrator - pressure hull O-rings			X	X		X
11. Missing primary/secondary penetrator - pressure hull O-rings			X	X		
12. Loss of penetrator - pressure hull seal due to contaminated O-ring surfaces			X	X		
13. Loss of penetrator - pressure hull seal due to damaged O-ring seal surfaces and grooves			X	X		X
14. Improper O-ring groove design	X					

Table 6-25. (cont'd)

Potential Problem Area Analysis

FAILURE MODE IDENTIFICATION	FAILURE MODE/CAUSE					
	INHERENT		INDUCED			
	Mgf/Design Deficiency	Material Fatigue	Instl/assy Deficiency	Maintenance Deficiency	Excessive Operational Demands	Rough Handling
15. Fracture of penetrator mounting flange	X	X			X	X
16. Detachment of penetrator from pressure hull due to explosion at internal connector interface due to short circuit fault current	X		X	X	X	
17. Detachment of penetrator shell from pressure hull due to impact force on penetrator	X				X	

Table 6-26. Penetrator Junction Box/Penetrator (Interface)

Potential Problem Area Analysis

FAILURE MODE IDENTIFICATION	FAILURE MODE/CAUSE					
	INHERENT		INDUCED			
	Mgf/Design Deficiency	Material Failure	Instl/assy Deficiency	Maintenance Deficiency	Excessive Operational Demands	Rough Handling
1. Detachment of junction box from penetrator due to impact force	X				X	
2. Detachment of junction box from penetrator due to explosion at plug/receptacle interface due to seawater entry past primary and secondary seal (short circuit fault current)	X		X	X		
3. Bent pin contact preventing proper mating of receptacle and plug	X		X	X		X
4. Oversize thickness of pin contact gasket preventing proper mating of plug to receptacle						
5. Open circuit due to oversize socket contact and undersize diameter of pin contact	X		X			
6. Improper mating of plug to receptacle due to plug/receptacle out of tolerance dimensions	X					
7. Improper junction box-penetrator mating due to dislodged, improper size or improperly aligned keys and keyways						
8. Improper or overage primary/secondary O-ring materials	X		X	X		
9. Damaged primary/secondary O-ring gaskets			X	X		X
10. Missing primary/secondary O-rings			X	X		
11. Loss of seals due to deformities of O-ring grooves	X		X	X		X
12. Loss of O-ring seals due to contaminated O-ring surfaces	X		X	X		
13. Improper O-ring groove design	X					

Tabel 6-26. (cont'd)

Potential Problem Area Analysis

FAILURE MODE IDENTIFICATION	FAILURE MODE/CAUSE					
	INHERENT		INDUCED			
	Mgf/Design Deficiency	Material Fatigue	Instl/assy Deficiency	Maintenance Deficiency	Excessive Operational Demands	Rough Handling
14. Material incompatability of junction box - penetrator - coupling ring interfaces	X					
15. Coupling ring - penetrator shell out of tolerance dimensions	X					
16. Loosening of coupling ring due to external shock - vibration forces	X		X	X	X	

Table 6-27. Penetrator Junction Box

Potential Problem Area Analysis

FAILURE MODE IDENTIFICATION	FAILURE MODE/CAUSE					
	INHERENT		INDUCED			
	Mgf/Design Deficiency	Material Fatigue	Instl/assy Deficiency	Maintenance Deficiency	Excessive Oper-ational Demands	Rough Handling
1. Fracture/collapse of junction box cover due to hydrostatic pressure	X				X	
2. Fracture/collapse of junction box cover due to material fatigue		X				
3. Improper or overage primary/secondary O-ring material on cover - receptacle seals	X		X	X		
4. Damaged primary/secondary O-rings on cover - receptacle seals			X	X		X
5. Missing primary/secondary O-rings on cover - receptacle to penetrator interface seals			X	X		
6. Loss of cover - receptacle seals due to damaged O-ring seal surfaces and grooves			X	X		X
7. Improper O-ring groove design	X					
8. Material incompatability of cover, receptacle, and junction box shell	X					
9. Dimensions out of tolerance on cover and junction box shell	X					
10. Material incompatability of receptacle screws with junction box shell						
11. Detachment of junction box from penetrator due to impact force	X				X	

Table 6-28. Penetrator Junction Box Wiring

Potential Problem Area Analysis

FAILURE MODE IDENTIFICATION	FAILURE MODE/CAUSE					
	INHERENT		INDUCED			
	Mgt/Design Deficiency	Material Fatigue	Instl/assy Deficiency	Maintenance Deficiency	Excessive Operational Demands	Rough Handling
1. Conductor insulation breakdown due to current overload conditions					X	
2. Insulation breakdown due to contaminated potting materials	X					
3. Potting material or pin contact insulation breakdown due to moisture accumulation at web section interface	X		X	X		
4. Open circuit due to under size diameter pin contact	X					
5. Open circuit due to missing or damaged socket contact springs			X	X		X
6. Damaged pin contact insulators			X	X		X
7. Open circuit due to contaminating insulating material at pin - socket contact interface	X		X	X		
8. Open circuit due to use of oversize socket contact	X		X	X		
9. Open circuit due to improper crimp joint between conductor and socket contact	X		X			
10. Explosion in penetrator cavity as a result of water entry into cavity (short circuit fault current)	X		X			

Table 6-29. Simplified Function Failure Mode and Effect Analysis

Hull Penetrator

FUNCTION/PURPOSE	ASSUMED TYPE OF FAILURE	POSSIBLE FAILURE CAUSE	EFFECT ON SYSTEM	EFFECT ON MISSION	COMPENSATING BACKUP
Provide pressureproof penetration of vehicle pressure hull	Water leakage past primary penetrator/unit seal	Seal surfaces damaged, faulty seal	None	None	Secondary O-ring
	Water leakage past secondary penetrator/hull seal	(same as above)	Water leakage into pressure hull	Dependent on extent of leakage	None
Provide pressureproof seal for outboard component (plug or junction box)	Water leakage past primary seal	(same as above)	None	None	Secondary O-ring
	Water leakage past secondary seal	(same as above)	Water contamination of enclosed contacts; short circuiting	Loss of equipment serviced by penetrator	Primary O-ring on outboard header
Provide positive mating & support for outboard component	Loose or insufficient retention	Improper torquing of coupling ring	None	None	Secondary O-ring
Provide proper alignment of contacts with mating component	Contacts do not mate properly; damaged	Defective key and/or keyways in components	Loss of damaged circuits	Dependent on services lost	Double keys intended to prevent "scoop" type contact damage
Provide a pressureproof envelope for enclosed electrical wiring	Fracture or cracking	Defective material or damaged material	Loss of all components serviced by penetrator due to flooding	(same as above)	Inboard header waterdam

Table 6-30. Simplified Function Failure Mode and Effect Analysis

Electrical Connector Plug

FUNCTION/PURPOSE	ASSUMED TYPE OF FAILURE	POSSIBLE FAILURE CAUSE	EFFECT ON SYSTEM	EFFECT ON MISSION	COMPENSATING BACKUP
Provide a rigid frame to withstand hydrostatic pressures and permit establishment of a watertight mating of external cable and connector plug	Warpage, fracture or collapse	Material imperfections or poor quality control	Loss of watertight envelope protection and eventual loss of electrical signal	Reduced control of external equipment	None
	Moisture Seepage	Marred or scratched surface area that mates with receptacle O-ring	Electrolysis causes buildup of H_2 and O_2 gas pressure eventually blowing O-rings and loss of watertight envelop	Eventual loss of involved control of external equipment	None
Provide for positive mating of connector plug and receptacle	Loose or insufficient connection	Plug not completely inserted into receptacle	None - Proper tightening of coupling ring insures depth of insertion	None	Coupling Ring (10.3)
Provide proper alignment of sockets and pins during mating of plug and receptacle	Sockets do not mate properly with receptacle pins	Plug shell not properly aligned with the socket contack arrangement. Alignment key out of position. Receptacle shell not properly aligned with the pin contact	Disruption of involved current flow	Reduced control of external equipment	None
Provide primary pressureproof seal for plug and receptacle union.	Rupture or leakage	Material imperfections or fatigue; material surface interface marred or scratched; poor maintenance procedures.	None, redundant O-ring	None	Secondary O-ring
			Failure of both O-rings, loss of electrical signal	Loss of external equipment function	None

Table 6-30. (Cont'd)

FUNCTION/PURPOSE	ASSUMED TYPE OF FAILURE	POSSIBLE FAILURE CAUSE	EFFECT ON SYSTEM	EFFECT ON MISSION	COMPENSATING BACKUP
	Moisture seepage	Electrolysis action developing excessive gas pressures	Loss of watertight envelope and development of electrical short	Loss of external equipment control	None
Isolate conductor from plug shell	Insulation breakdown and ultimate electrical short	Material impurities; material fatigue/age; external cable vibration induced fatigue; moisture seepage/corrosion	Ultimate loss of electrical signal	Gradual loss of external equipment function	None
Provide positive electrical path between external cable conductor and the receptacle contact pin	Open circuit	Defective alignment; rough handling; poor maintenance procedures; improper contact crimping; improper insertion of retainer ring	Intermittent and/or disruption of current flow	Reduced control of external equipment	None
Provide a watertight envelope for interface of plug shell and external cabling conductors	Leakage or rupture	Material imperfection; improper/poor bonding; external cable vibration induced fatigue; interface corrosion; improper maintenance/handling	Loss of watertight envelope and development of electrical shorts	Loss of external equipment function	None
Retain the mated connection of connector plug and receptacle	Wear, fracture, warpage or broken coupling ring lip	Material imperfections or poor quality control; external cable vibration induced fatigue and improper tightening	Loss of connection resulting in development of an electrical short.	Eventual loss of external equipment function	None

Table 6-31. Simplified Function Failure Mode and Effect Analysis

Electrical Connector Receptacle

FUNCTION/PURPOSE	ASSUMED TYPE OF FAILURE	POSSIBLE FAILURE CAUSE	EFFECT ON SYSTEM	EFFECT ON MISSION	COMPENSATING BACKUP
Provide a rigid frame to withstand hydrostatic pressures and permit establishment of watertight mating	Warpage, fracture or collapse	Material imperfections or poor quality control	Loss of watertight envelope protection and eventual loss of electrical signal	Reduced control of external equipment	None
Provide for positive mating of connector receptacle and plug	Loose or insufficient connection	Plug not completely inserted into receptacle. Worn or stripped threads for coupling ring union	None - Proper tightening of coupling-ring ensures length of engagement	None	Coupling Ring
Provide a proper alignment of pins and sockets during mating of receptacle and plug.	Pin contacts do not mate properly with receptacle pins	Receptacle shell not properly aligned with pin contact arrangement. Alignment key out of position. Plug shell not properly aligned with the socket contact arrangement	Disruption of involved current flow	Reduced control of external equipment	None
Backup watertight seal for plug to receptacle union	Moisture/water seepage, leakage/rupture	Material imperfections or fatigue; O-ring surface marred or scratched; maintenance induced failure; excessive build-up of H_2 and O_2 gases caused by electrolysis action	Increasing current loss; eventual loss of involved signals	Eventual loss of involved external equipment control	None
Insulate pin contacts from receptacle shell	Electrical short	Insulation breakdown due to impurities within the insulator; material fatigue/age	Increasing loss of transmitted signals	Eventual loss of the involved external equipment control	None
Provide support and insulation of pin contacts	Electrical short	Improper installation material fatigue/age deficient maintenance procedures	Eventual loss of involved electrical signals	Eventual loss of the involved external equipment control	None

Table 6-31. (Cont'd)

FUNCTION/PURPOSE	ASSUMED TYPE OF FAILURE	POSSIBLE FAILURE CAUSE	EFFECT ON SYSTEM	EFFECT ON MISSION	COMPENSATING BACKUP
Provide positive electrical connection between conductor and the socket contact	Open electrical circuit	Improper or cold solder connection; defective alignment key; use of excessive force for inserting plug into receptacle; deficient maintenance procedures	Intermittent/complete loss of involved electrical signal	Reduced/complete loss of involved external equipment control	None
Provide a watertight seal for receptacle to component at interface	Moisture/water seepage, leakage/rupture	Material imperfection or fatigue; interface surfaces are marred or scratched; poor maintenance procedures; improper torquing of coupling ring	None, redundant O-ring	None	Secondary O-ring
			Failure of both O-ring-- saturation of penetrator cavity with moisture/water	Eventual loss of all electrical signals passing thru penetrator cavity	None

Table 6-32. Simplified Function Failure Mode and Effect Analysis

Outboard Junction Box

FUNCTION/PURPOSE	ASSUMED TYPE OF FAILURE	POSSIBLE FAILURE CAUSE	EFFECT ON SYSTEM	EFFECT ON MISSION	COMPENSATING BACKUP
Provide rigid, pressure-proof foundation for electrical connectors	Water leakage past receptacle/junction box primary seal	Seal surfaces damaged, faulty seal, improper tightening of receptacle mounting screws	None	None	Receptacle junction box secondary seal
	Water leakage past receptacle/junction box Secondary seal	(same as above)	Flooding of internal wiring	Possible loss of all circuits serviced by junction box	None
	Water leakage past contact insulator seal	Faulty glass	Degraded and possible loss of receptacle circuit	Possible water seepage into junction box cavity	None
Provide a pressure proof envelope for enclosed electrical wiring	Cracking or collapse	Defective material, collision	Flooding of internal wiring	(same as above)	None
Provide access to internal wiring of junction box (pressure proof cover)	Water leakage past cover/junction box primary seal	Seals or seal surfaces damaged	None	None	Secondary seal
	Water leakage past cover/junction box secondary seal	(same as above) plus improper fitting of cover	Flooding of internal wiring	Possible loss of all circuits serviced by junction box	None
	Distortion or collapse of cover	Defective material, collision	Flooding of internal wiring	Possible loss of all circuits serviced by junction box	None

Table 6-32. (Cont'd)

FUNCTION/PURPOSE	ASSUMED TYPE OF FAILURE	POSSIBLE FAILURE CAUSE	EFFECT ON SYSTEM	EFFECT ON MISSION	COMPEN-SATING BACKUP
Provide rigid pressure proof mounting to hull penetrator	Water leakage past junction box/penetrator primary seal	Damaged seals or seal surfaces	None	None	Junction box/penetrator secondary seal
	Water leakage past junction box/penetrator secondary seal	Damaged seals or seal surfaces, improper tightening of junction box coupling ring	Flooding of junction box and penetrator contacts	Loss of all circuits serviced by junction box	None
	Damaged contacts in junction box and/or penetrator	Damaged key/keyways in either component	Loss of damaged circuits	Loss of damaged circuits	Double keys intended to prevent "scoop" type contact damage

Section 6

REFERENCES

1. Spadone, D. M. Meeting on Cables, Connectors, and Penetrators for Deep Sea Vehicles, U.S. Navy Deep Submergence Systems Project Office (DSSP), Bethesda, Md., January 15-16, 1969.

2. Material Certification Procedures and Criteria Manual for Manned Noncombatant Submersibles, NAVSHIPS Manual 0900-028-2010, Naval Ship Systems Command, Dept. of the Navy, Wash., D.C., September 1, 1968.

3. Safety and Operational Guidelines for Undersea Vehicles, Marine Technology Society, Undersea Vehicle Committee, Washington, D.C., 1968.

4. Guide for the Classification of Manned Submersibles, American Bureau of Shipping, New York, N.Y., 1968.

5. Pre-Survey Outline Booklet for Manned Non-Combatant Submersibles, NAVSHIPS Manual 0900-028-2020, Naval Ship Systems Command, Dept. of the Navy, Wash., D.C., September 1, 1968.

6. Roark, R. J. "Formulas For Stress and Strain" 3rd Edition, McGraw-Hill Book Co., Inc., N.Y., N.Y., 1954.

7. Seely, F. B. "Resistance of Materials" 3rd Edition, John Wiley and Sons, Inc., London, 1954.

8. Shigley, J. E. Machine Design, McGraw-Hill Book Co., Inc., N.Y., N.Y., 1956.

9. Oberg, E. and F. D. Jones, Machinery's Handbook, 18th Edition, Industrial Press, N.Y., N.Y., 1959

10. Arnzen, H. E. "Failure Mode and Effect Analysis: A Powerful Engineering Tool for Component and System Optimization", Fifth Reliability and Maintainability Conference, N.Y., N.Y., aponsored by American Institute of Aeronautics and Astronautics, July 18-20, 1966.

11. Reliability and Maintainability Handbook - NAVSHIPS 0900-002-3000, Chapter 12 "Failure Modes and Effects Analysis"

BIBLIOGRAPHY

A

UNDERWATER ELECTRICAL CONNECTOR/PENETRATORS

Aamodt, T. Seals for Electrical Equipment Under Water Pressure and Fusion of Marlex to Polyethylene by a Molding Process, Bell Telephone Laboratories, Report No. 56-131-41 of August 16, 1956.

Aamodt, T. Seals for Ocean Bottom Equipment Containers, Bell Telephone Laboratories, Report No. MM-61-213-26 of February 28, 1961.

Bridges, R.M. "Undersea Cable System Design for the Eniwetok BMILS Installation," Marine Technology Society Conference, Washington, D.C., June 29 to July 1, 1970.

Briggs, E.M. et al., A Wet and Dry Deep Submergence Electrical Power Transmission System, Final Report Southwest Research Institute Project No. 03-25707-01 July 25, 1969.

Briggs, E.M. "The Design of a 4160 Volt Deep Sea Wet and Dry Connector System, Marine Technology Society Conference, Washington, D.C. June 29 to July 1, 1970.

Dowd, J.K. Design Report-Cable Seal for PQM Hydrophone, EB Div., Report No. U411-61-091, July 1, 1961.

Dowd, J.K. Design Study Report-Pressure Proof Hermetically Sealed Coaxial Radio Frequency Hull Fittings for Submarines, EB Div. Report No. U413-62-095, Contract NObs 86068, June, 1962.

Dowd, J.K. and H.C. Miner, Design Study Report-Watertight Deep Submergency Cable Hull Penetrations Fittings for Submarines, EB Div. Report No. U413-62-097, Contract NObs 86-68, June, 1962.

Dowd, J.K. Pressure Proof Electrical Cable Hull Penetration Fittings for Submarines, EB Div. Report No. SPD-60-101, pp. 60-192, Contract NObs 77007, October 31, 1960.

Edwards, F.L. and R.A. Patterson, "Pressure Balanced Electrical Hull Penetrators and External Cabling for Deepstar 20,000," Marine Technology Society Conference, Washington, D.C. June 29 to July 1, 1970.

Hackman, D.J. and B.R. Lower, Summary Report on a Study to Decrease Wire Breakage in Underwater Electrical Connectors, Battelle Memorial Institute, Columbus Laboratories, April 30, 1968.

Haigh, K.R. "Deep-Sea Cable-Gland System for Underwater Vehicles and Oceanographic Equipment," Proceedings, IEEE, Vol. 115, No. 1 January, 1968.

Haworth, R.F. Aluminaut Electrical Hull Fittings and Outboard Cable Connectors, January, 1966.

Haworth, R.F. Design Study Report: Hermetically Sealed Polaris Umbilical Cable Connectors, EB Div. Report No. SPD-60-107, p. 60-182, Contract NObs 77007 and 4204, November, 1960.

Haworth, R.F. Design Study Report: Watertight Hermetically Sealed Electrical Connectors for Submarines, EB Div. Report No. SPD 60-101, p. 60-194, Contract NObs 77007, October 31, 1960.

Haworth, R.F. Electrical Cabling System for the STAR III Vehicle, ASME Conference, ASME Paper No. 66-WA/UNT-11, November 27 to December 1, 1966.

Haworth, R.F. and J.J. Redding, Design Study Report: Pressure Proof Hull Fitting and DSS-3 Type Cables on AN/BQQ-1 Sonar Array, SSN597, p. 59-134, Contract NObs 77007, October 23, 1959.

Haworth, R.F. Packaging Underwater Electrical/Electronic Components on Deep Submergence Vehicles, Insulation/Circuits, December, 1970.

Haworth, R.F. and J.E. Regan, Watertight Electrical Cable Penetrations for Submersibles - Past and Present, ASME Conference, ASME Paper No. 65-WA/UNT-12, November 7-11, 1965.

Haworth, R.F. and J.E. Regan, Watertight Electrical Connector for Undersea Vehicles and Components, ASME Conference, ASME Paper No. 64-WA/UNT-10, November 29 to December 4, 1964.

Johnson, E. Hermetic Seals in Plastic Bodied Connectors, 16th Annual Wire and Cable Symposium, Atlantic City, N.J., November 29 to December 1, 1967.

Klonaris, O. "Underwater Connectors," Underwater Science and Technology Journal, June, 1970.

Lenkey, J., III and W.W. Wyatt, Polyethylene Bonding to Metal for Cable Penetration of Pressure Hulls and Communications Applications, 17th Annual Wire and Cable Symposium, Atlantic City, New Jersey, December 4-6, 1968.

Miner, H.C. Design Study Report- Ballast Tank Bulkhead Cable Seals, EB Div. Report No. SPD 60-105, p. 60-195, Contract NObs 77007, October 31, 1960.

Miner, H.C. Final Report - Investigation, Design Development, and Testing of Shore Power Connector Fittings for Permanent Installation in Submarine Hulls, EB Div. Report No. U413-66-049, Contract NObs 90521, March 31, 1966.

Morrison, J.B. An Investigation of Cable Seals, Applied Physics Laboratories, University of Washington, March 1, 1954.

Nation, R.D. Deep Submergence Cables, Connectors and Penetrators, Nortronics Division of Northrup Corp., (DSSP Contract N00024-68-C-0217), February 21, 1967.

Nelson, A.L. "Deep Sea Electrical Connectors and Feed-Through Insulators for Packaging Electronics," Material Electronic Packaging and Production Conference, Long Beach, California, June 9, 1965.

O'Brien, D.G. "Application of Glass-Hermetic-Sealed Watertight Electrical Connectors," Marine Technology Society Conference, June, 1967.

Okleshen, E.J., "Underwater Electronic Packaging," Electrical Design News, Electronic Circuit Packaging Symposium, Fort Wayne, Indiana, August, 1960.

Sanford, H.L. Design Study Report - Phase Two - Electrical Bulkhead Connectors for Submarine Holding Bulkheads, EB Div Report No. U413-67-202, December 29, 1967.

Sanford, H.L. Phase I Design Study Report - Electrical Bulkhead Connectors for Submarine Holding Bulkheads, EB Div. Report No. U413-66-056, Contract NObs 92442, March 31, 1966.

Sanford, H.L. Design Study Report-Watertight Electrical Plugs for Polaris Missile Harnesses on Submarines, EB Div. Report No. 413-62-096.

Sanford, H.L. and R.A. Cameron, Design Study Report-Molded DSS-3 Cable Splices for External Use on Submarines, EB Div. Report No. 413-62-211, December 12, 1962.

Sanford, H.L., et. al. Final Report-Watertight Deep Submergence Electrical Connectors and Hull Fitting for Submarines, EB Div Report 413-65-185, Contract NObs 88518, October, 1965.

Smith, O.D. Connector Design Considerations for Hydrospace Environments, Oceanology International, November, 1970.

Spadone, D.M. Meeting on Cables, Connectors and Penetrators for Deep Sea Vehicles, Deep Submergence Systems Project Office, Bethesda, Maryland, January 15-16, 1969.

Spadone, D. et. al. "Three Hull Electrical Penetrators for the Deep Submergence Rescue Vehicle," 5th Annual Marine Technology Society Conference, Miami Beach, Florida, June 15-18, 1969.

Thym, G. C. and R.A. Swan, Underwater Cable Connectors and Terminators for the Hydrostatic Pressures to 10,000 psi, Tenth Annual Wire and Cable Symposium, Asbury Park, New Jersey, November, 1961.

Walsh, D.K. "Underwater Electrical Cables and Connectors Engineered as a Single Component," Marine Technology Society Conference, June, 1966.

White, J.F. Cables and Cable Connectors, (C), NUSL Report No. 1060, Navy Underwater Sound Laboratory, New London, Connecticut, May 13-14, 1969.

Wolski, B. NR-1 Special Test for Effect of Short Circuit Fault Current on Hull Fittings, Electric Boat Division Report No. 418-69-001, January 15, 1969.

Wolski, B. NR-1 Special Test for Outboard Electrical Plug/Cable Assemblies and Junction Boxes, Two Volumes, Electric Boat Division Report No. 418-69-002, April 25, 1969.

Wolski, B. NR-1 Special Test for Electrical Hull Fittings, Junction Boxes and Associated Cable Assemblies, Two Volumes, Electric Boat Division, Report No. 418-68-010, October 22, 1968.

BIBLIOGRAPHY

B

WIRE AND CABLE

Alexander, D.C. "The Fatigue Life of Stranded Hookup Wire," Second Annual Wire and Cable Symposium, AD 656 334, 1953.

Bennett, L.C. and K.E. Hofer, Jr., "Effect of Geometry on Flex Life of Stranded Wire," Fifth Annual BuWeps Symposium on Advanced Techniques for Naval Aircraft Electrical Systems, Washington, D.C., October 13-14, 1964.

Bigelow, N.R., "Development and Evaluation of a Lightweight Airframe and Hookup Wire for Aerospace Applications," Annual BuWeps Symposium on Advanced Wiring Techniques for Naval Aircraft, Washington, D.C., October 13-14, 1964.

Bryden, J.W. and P. Mitton, "Resistance of Rubber Covered Cable, Jacket, and Insulation Stacks to Weather and Artificial Aging," Fifth Annual Wire and Cable Symposium, AD 656 516, 1956.

Calhoun, F., "Submarine Cable System for the Florida Missile Test Range," Third Annual Wire and Cable Symposium, AD 656 256, 1954.

Casarella, M.J. and J. Parsons, "Cable System Under Hydrodynamic Loading," MTS Journal, July -- August, 1970.

Dibble, W.H., "The Development of Arctic Rubber Insulations and Jackets," First Annual Wire and Cable Symposium, 1952.

Eager, G.S. and S.P. Lambertson, "Mineral Insulation Wiring," Second Wire and Cable Symposium, AD656 327, 1953.

Elmendorf, C.H. and B.C. Heezen, "Oceanographic Information for Engineering Submarine Cable Systems," The Bell System Technical Journal, September, 1957.

Hamre, H.G. "Working Voltage Classification of Insulation Wire," Seventh Annual Naval Air Systems Command Symposium on Advanced Techniques for Aircraft Electric Systems, Washington, D.C., October 11-12, 1966.

International Wire Products Corporation. "Flex Test Report -- True Concentric Versus Unilay Stranded Wire," International Wire Products Corporation, Midland Park, New Jersey, 1962.

Johnson, H.E. "Evaluation of Light-Weight Insulation Systems for Aerospace Wire," Sixth Annual Bureau of Naval Weapons Symposium on Advanced Techniques for Aircraft Electric Systems, Washington, D.C., October 12-13, 1965.

Lenkey, J., III, "Underwater Cables for Instrumentation," Oceanology International, July/August, 1969.

Snoke, L.R. "Resistance of Organic Materials and Cable Structures to Marine Biological Attack," The Bell System Technical Journal, September, 1957.

Todd, G.F., "Cable Sheaths and Water Permeability," Eight Annual Wire and Cable Symposium, Asbury Park, New Jersey, AD 656 243, December 1959.

BIBLIOGRAPHY

C

MATERIALS IN THE SEA WATER ENVIRONMENT

Brown, B.F. and R.J. Goode, "Evaluating Mechanical and Corrosion Suitability of Materials, ASME Conference, ASME Paper No. 67-DE-7, May 15-18, 1967.

DSSP Instruction 9020.2, "Corrosion Control, Guidelines for," PMS 11-/201/SH: pm of December 13, 1968.

"Harper Corrosion Guide," The H. M. Harper Co., Molton Grove, Ill.

Hunt, J.R. and M.D. Bellware, "Ocean Engineering Hardware Requires Copper-Nickel Alloys," The International Nickel Company, Inc.

Jerome, R. and J.L. March, Designers Guidelines for Selection and Use of Metallic Materials in Seawater Applications, General Dynamics, Electric Boat Division, December 8, 1966.

Muraoka, J.A. "The Effects of Fouling by Deep-Ocean Marine Organisms," Undersea Technology, May, 1963.

Muraoka, J.S. "Effects of Marine Organisms," Machine Design, January 18, 1968.

Reinhart, F.M. "Corrosion of Materials in Hydrospace - Part I, Irons, Steels, Cast Irons, and Steel Products," U.S. Naval Civil Engineering Laboratory, Port Hueneme, California, Technical Note N-900, July, 1967.

Reinhart, F.M. "Corrosion of Materials in Hydrospace - Part II - Nickel Alloys," U.S. Naval Civil Engineering Laboratory, Port Hueneme, California, Technical Note N-915, August, 1967.

Reinhart, F.M. "Corrosion of Materials in Hydrospace - Part III - Titanium and Titanium Alloys," U.S. Naval Civil Engineering Lab, Port Hueneme, California, Technical Memo. N-921, September, 1967.

Reinhart, F.M. "Corrosion of Materials in Hydrospace - Part IV - Copper and Copper Alloys," U.S. Naval Civil Engineering Laboratory, Port Hueneme, California, Technical Note N-961, April, 1968.

Reinhart, F.M. "Deep Ocean Corrosion," Geo-Marine Technology, September, 1965.

Saroyan, J.R. "Protective Coatings," Machine Design, January 18, 1968.

Uhlig, H.H. The Corrosion Handbook, John Wiley, New York, 1948.

Woodland, B.T. "Deep Submergence Metal Structures," Machine Design, January 18, 1968.

BIBLIOGRAPHY

D

SEAL DESIGN

Adiletta, J.D., "How to Apply O-rings," Product Engineering, August, 1957.

Anon, "Gasket Design Manual," Armstrong Cork Company, Lancaster, Pennsylvania, 1956.

Bridgman, P.E., "The Physics of High Pressure," McMillan Co., New York, New York, 1931.

Carlotta, E.L., "Materials for O-ring Seals - Their Properties and Selection," Materials and Methods, December, 1953.

Et al, "Seals Reference Issue, " Machine Design, June 11, 1964.

Freeman, A.R., "Gaskets for High Pressure Vessels," ASME Paper No. 52-11RD-5, Seventh National Instrument Conference, Cleveland, Ohio, September 9-10, 1952; also printed in Mechanical Engineering, December, 1952.

Haworth, R.F. Gasket Study for Outboard Electrical System Enclosures, Electric Boat Division, Report SPD-57-002, February 14, 1957.

McCuiston, T.J. and R.E. Allen, "Factors Influencing O-ring Operation," Applied Hydraulics, June, 1950.

MIL-HDBK-212, "Gasket Materials (Nonmetallic)," September 26, 1958.

NAVSHIPS 250-248, "O-ring Service Manual," September, 1951.

Smoley, E.M., "Design Criteria for Sealing Gasketed Joints," Machine Design, November 21, 1963.

Thomson, J.L., "Packed Glands for High Pressure," Product Engineering, November 20, 1958.

Warring, R.H. "Seals and Packings," Trade and Technical Press, Ltd., Norden, Surrey, England, 1967.

Whalen, J.J. "How to Select the Right Gasket Materials," Product Engineering, October 3, 1960.

Zeitlin, A. "Equipment for Ultrahigh Pressures," Mechanical Engineering, October, 1961.

BIBLIOGRAPHY

E

INSULATION MATERIALS

Anon, "Development of Specification for Polyurethane Rubber Used to Encapsulate Submarine Antennas," Mare Island Naval Shipyard, Identification No. 2269-1, August 11, 1964.

Athey, R.J. "Water Resistance of Liquid Urethane Vulcanizates," Adiprene Bulletin No. 5, E. I. DuPont de Nemours and Co., Inc., Wilmington, Delaware.

Barnett, R.L. and A. Humpreys, "Design for Minimum Weight," Materials In Design Engineering, January, 1962.

Beach, N.E. "Government Specifications and Standards for Plastics, Covering Defense Engineering Materials and Applications," (Revised), Picatinny Arsenal, Dover, New Jersey, AD 640377

Couzens, E.G. and V.E. Yarsley, Plastics in the Modern World, Penguin Books, Inc., Baltimore, Maryland, 1968.

Davis, J.W. et al, "The Fatigue Resistance of Reinforced Plastics," Materials in Design Engineering, December, 1964.

Harper, C.A. "Electrical Insulating Materials," Machine Design, September 28, 1967.

Harper, C.A. "Insulating Materials," Electronic Design, June 7, 1969.

Harper, C.A. "Plastics for Electronics," Kiver Publications, Inc., West Adams Street, Chicago, Illinois.

Hauck, J.E. "Engineer's Guide to Plastics," Materials in Design Engineering, February, 1967.

Hauck, J.E. "How Water Affects Plastics," Materials in Design Engineering, November, 1966.

Insulation Directory/Encyclopedia, Lake Publishing Co., Libertyville, Illinois, June/July, 1970.

Morris, L. "Organic Materials in Hydrospace Applications," Products Research Co., February 26, 1964.

Moses, G.L. Electrical Insulation, McGraw-Hill Book Co., Inc., New York, New York, 1951.

MIL-HDBK-149, "Rubber and Rubber-Like Materials," June 30, 1965.

MIL-HDBK-700 (MR), "Plastics," November 1, 1965.

BIBLIOGRAPHY

F

POTTING COMPOUNDS

Athey, R.J. "Water Resistance of Liquid Urethane Vulcanizates," E.I. DuPont Elastomer Chemicals Dept. Bulletin No. 5, April, 1965.

Bandel, D. "Potting and Encapsulating Materials and Methods," Circuits Manufacturing, March, April, June, July, 1969.

Bolger, Dr. J.C. "Selection of Connector Potting Compounds," 2nd Annual Connector Symposium, Cherry Hill, New Jersey, October 21, 22, 1969.

Ehrlich, A. and J.W. Hayes, "Thermal and Hydrolytic Stability of Urethane Resins," 9th Electrical Insulation Conference (EIC), Boston, Massachusetts, September 8-11, 1969.

Gahimer, F.H. and F.W. Nieske, "Navy Investigates Reversion Phenomena of Two Elastomers," Insulation, August, 1968.

Gahimer, F.H. and F.W. Nieske, "Hydrolytic Stability of Polyurethane and Polyacrylate Elastomers in Humid Environments," NAFI Report No. TR-1372, February 27, 1969.

Gahimer, F.H. and F.W. Nieske, "Properties of Commercial Polyurethane Rubber Encapsulating Compounds," NAFI Report No. TR-1032, October 15, 1967.

Gahimer, F.H. and F.W. Nieske, "Reversion of Polyurethane and Polyacrylate Rubber Encapsulating Compounds in Humid Environments and Development of a Standard Reversion Test," NAFI, Report No. TR-1201, April 15, 1968.

Griffin, W.R. "Reconstitution of Reverted Polyurethane Potting Compounds, AFML-TR-68-398, April, 1969.

Keith, R.E. "Potting Electronic Modules" NASA SP-5077, 1969.

Koved, F.L. "Encapsulating to Military Specifications," Electronic Industries, July, 1963.

Lebovits, A. "The Permeability and Swelling of Elastomers and Plastics at High Hydrostatic Pressures," Ocean Engineering Vol. 1, Pergamon Press, 1968.

Leute, F.A. "Urethanes Made Stable at Elevated Temperature and Humidity," Insulation, August, 1968.

Redding, J.J. Utilization of Heat Shrinkable Back-shells Over Hydrolytically Unstable Polyurethane Potted Connectors, SSBN634, GD/Electric Boat Division Report No. U413-70-019, March, 1970.

Rosato, D.V. and R.T. Schwartz, "Environmental Effects on Polymeric Materials, Vol I, pp. 1167-1177, Interscience Publishers, 1968.

Schollenberger, C.S. "Polyurethane Chemistry and Environmental Resistance," B. F. Goodrich Co. Research Center, Brecksville, Ohio, January 14, 1970.

Turner, J.F. Restoration of Ships Inertial Navigation System Cable, NADC Report No. NADC-MA-6952, November 14, 1969.

Welch, B.L. "Estimating Service Life of Potting Compound EC2273 Using Accelerated Hydrolytic Reversion at High Temperature and High Humidity," Weber State College, Ogden, Utah, January 30, 1970.

BIBLIOGRAPHY

G

ADHESIVES

Burtzlaf, H.R. and K.F. Charter, "Factors in Joint Design Using Adhesives for Metal Bonding."

Delay, L.J. "Testing Methods to Evaluate Adhesive Performance," ASME Publication No. 66-MD-46.

Halsey, G.H. "A Status Report on Ultrasonic Inspection Methods for Rubber Bond Condition," ASME Publication No. 68-WA/RP-5.

LaFlamme, P.M. "Adhesive Manual and Glossary of Adhesive Terms," Quantum, Inc., Wallingford, Connecticut, 1959.

Malootian, M.H. The Effect of Water Immersion on Some Tensile-Sheer Bonds, USL Technical Memorandum No. 2220-124-67, June, 1967.

Marriott, J.A. Development of Adhesives for Salt Water Use, General Dynamics/Electric Boat Division Report No. U413-63-168, December 31, 1963.

MIL-STD-454, Requirement 23, "Adhesives," January 5, 1965.

MIL-HDBK-691, "Adhesives,"

Patrick, R.L. "Factors Determining the Strength of Adhesive Bonds," ASME Publication No. 70-DE-33.

Patrick, R.L. "Factors Determining the Strength of Adhesive Bonds," ASME Publication No. 70-DE-33.

Pattee, H.E. "Adhesive Bonding of Titanium," Materials in Design Engineering, February, 1959.

Peters, H. "Bonding Polyethylene to Rubbers, Brass, and Brass Plated Metals," Bell Telephone Laboratories, October 15, 1957.

Rider, D.K. "Which Adhesive for Bonded Metal Assembly," Product Engineering, May 25, 1964.

Rider, D.K. "Surface Preparation for Bonded Metal Assembly," Product Engineering, June 8, 1964.

Rauhut, H.W. "Pretreating Polyethylene for Optimum Structural-Adhesive Joints, - Theoretical Concepts, and Surface Pretreatments," Adhesive Age, December, 1969 and January, 1970.

Sharpe, L.H. H. Schonhorn, and C.L. Lynch, "Adhesives," International Science and Technology, April, 1964.

Snogren, R.C. "Optimal Selection of Adhesives Related to Performance Needs," ASME Publication No. 70-DE-69.

Snogren, R.C. "Surface Treatment of Joints for Structural Adhesive Bonding," ASME Publication No. 66-MD-39.

Stokes, E.P. "Adhesives for the Electrical/Electronic Industry," Insulation/ Circuits, September, 1970.

APPENDIX 1

GLOSSARY

APPENDIX 1

GLOSSARY

For a better understanding of the terminology used in this report, the following glossary is presented. Rather than compiling one list of terms, the nomenclature is separated into three categories. The categories are:

1.1 Connector Plug
1.2 Connector Receptacle
1.3 Hull Penetrator

Accompanying each category at its close are drawings of a hypothetical component showing the relative location of the parts and items described in the text. The components depicted are for purposes of illustration only.

1.1 CONNECTOR PLUG

BARREL CHAMFER - Leveled edge on a terminal or socket contact which allows easier entry of the conductor or a pin contact.

BRAIDED SHIELD - A flexible conductor or radiation shield in a cable made of woven or braided assembly of fine wires.

BUSHING - An adapter used in a plug assembly to reduce an entry hole to one of smaller diameter.

BUSHING RETAINING CAP - A device used to secure a bushing in a plug shell.

COAXIAL - Conductors or contacts arranged concentrically.

CONDUCTOR - A wire or combination of wires not insulated from one another, suitable for carrying a single electric current.

CONDUCTOR BARREL - The portion of the terminal or contact which accommodates the conductor.

CONDUCTOR ENTRY CUTOUT - The portion of a right angle plug shell through which the insulated conductors pass into the assembled rear insulator cavity.

CONDUCTOR INSULATION - The dielectric portion of the insulated conductor whose function is to isolate conductors from one another and adjacent metallic parts.

CONTACT - The conductive element in a connector which makes actual contact for the purpose of transferring electrical energy.

CONTACT RETAINER CLIP - A spring device usually surrounding the contact which locks the contact in the insulator bore.

COUPLING RING LOCKWIRE - A wire used to secure the coupling ring against uncoupling rotation.

COUPLING RING - A device fitted to the plug assembly which engages and disengages the plug with the receptacle.

COUPLING RING FLANGE - The annular protrusion part of the plug shell against which the coupling ring bears as it is engaged with the receptacle.

COUPLING RING SHOULDER - The innermost part of the coupling ring which bears on the shell coupling ring flange.

COUPLING RING THRUST WASHER - A thin annular bearing member fitted between the coupling ring and the molded plug/cable seal which facilitates rotation of the coupling ring in the process of unmating the connector.

DOVETAIL - The angular flange on the plug shell over which the primary seal fits and is retained.

END CAP - A protective closure fitted to the axial rear opening of a right angle plug shell.

END CAP RETAINING RING - The spring locking device used to secure the end cap to the plug shell.

ELECTRICAL CABLE - An arrangement of insulated conductors bundled together and covered with a jacket or sheath. The cable may contain shielding braids; and fillers to assure a round cable cross section.

ELECTRICAL CABLE JACKET - The outermost elastomeric or plastic protective covering of a cable; also referred to as sheath .

FRONT INSULATOR - The dielectric body containing an arrangement of axially bored holes into which the contacts are fitted and retained.

INNER CONDUCTOR SOCKET CONTACT - The innermost contact of a coaxial contact plug.

INSPECTION HOLE - A small hole near the base of the contact conductor barrel which allows visual assurance that the conductor is fully seated in the barrel prior to joining.

INSULATION BARREL - The portion of the terminal or contact which accommodates the insulated conductor.

INSULATOR - A dielectric component of a connector which is used to insulate pin and socket contacts.

INSULATOR BORE - The hole in the insulator into which the socket contact is assembled and retained.

INSULATOR SEAL - A film of elastomeric compound used to cover the spaces between the insulator bore and the conductor within to prevent flow of molding compound through the bores and into the socket contacts.

INSULATOR THRUST SHOULDER - A projecting surface on the front insulator which resists the axial load caused by hydrostatic pressure acting at the rear face of the plug.

MOLDED PLUG TO CABLE SEAL (OR MOLDED BOOT) - The elastomeric or plastic sleeve molded onto a plug and cable assembly whose primary function is to seal the junction against the seawater environment.

OUTER CONDUCTOR - The outside conductor in a coaxial cable.

OUTER CONDUCTOR SLEEVE - The cylindrical member which connects the outer conductor to the cable and to the plug outer conductor spring contact.

OUTER CONDUCTOR SPRING CONTACT - The outermost contact of a coaxial plug usually of multiple construction.

PLUG - The male component of a connector set, the front part of which fits into the receptacle. The enclosed contacts may be either pins or sockets. The plug is usually that portion of the connector set which is affixed to the cable.

PLUG SEAL ENTRY BEVEL - A chamfered shoulder on the plug nose outer surface which provides an easy entry into the receptacle O-ring secondary seal.

PLUG SHELL - The body of the plug which houses and properly positions the insulator assembly and associated wiring.

PLUG SHELL NOSE - That portion of the plug shell forward of the bearing face which fits into the plug cavity in the receptacle.

PLUG SHELL SHANK - That portion of the plug shell to the rear of the coupling ring flange to which the molded plug/cable seal is attached.

POLARIZING KEYWAY - A slot in a plug shell designed to accommodate the mating receptacle key. It provides proper relative angular alignment of the mating members.

PRIMARY SEAL* - The sealing element of a mated connector or penetrator which is normally in contact with the environmental medium against which it must seal.

PROTECTIVE COVER - A non-pressure proof cover fitted to a plug or receptacle whose primary function is to protect against mechanical damage and contamination by dirt, or other foreign objects.

REAR INSULATOR - A dielectric bushing which also serves as a spacer to hold the front insulator against the thrust shoulder of the plug shell.

REAR INSULATOR CAVITY - The internal void of the rear insulator which accommodates the insulated conductors.

SHIELD CRIMP FERRULE (SHIELD CRIMP TERMINAL) - The metallic shells designed to be used in pairs, and of such size that one rests concentrically within the other. Applied one under and one over the turned-back shield, the shell pair is crimp-locked to the shield using a special crimping tool.

SHRINKABLE TUBING INSULATION - A dielectric sleeving obtainable in a variety of sizes and materials. Upon exposure to heat the tubing is capable of shrinking radially up to half of its original diameter. It is used primarily to cover conductor splices or junctions.

SOCKET - The bore or opening in the contact's front portion which accommodates the mating pin contact.

SOCKET CONTACT - A contact having a female engagement end which will accept a male pin contact.

SPANNER WRENCH ENGAGEMENT HOLE - The hole into which the spanner wrench pin fits to tighten or loosen the coupling ring.

*Primary seals are normally identified by a prefix which denotes the components being sealed (e.g. cover to head primary seal). These are identified in the accompanying figures.

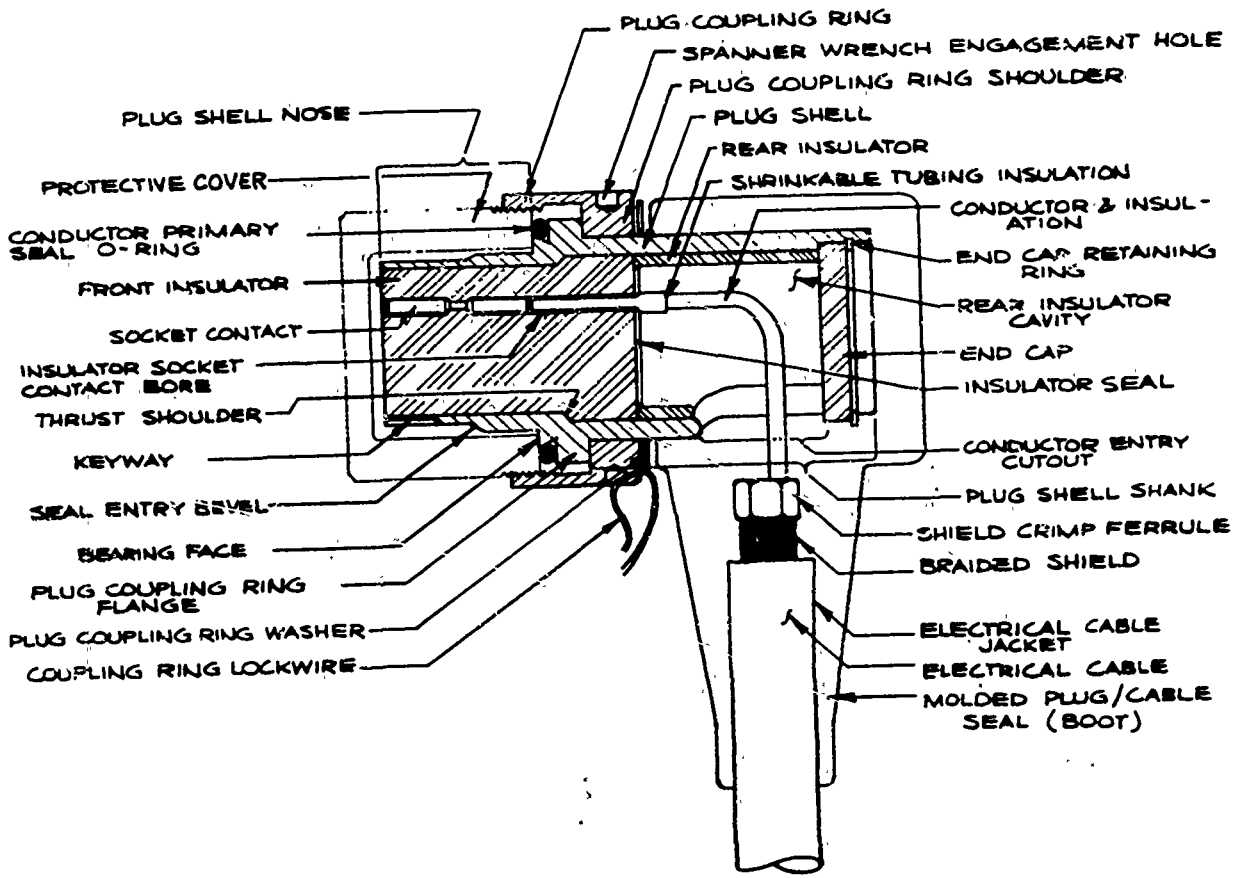

Figure A-1-1. Connector Plug Nomenclature

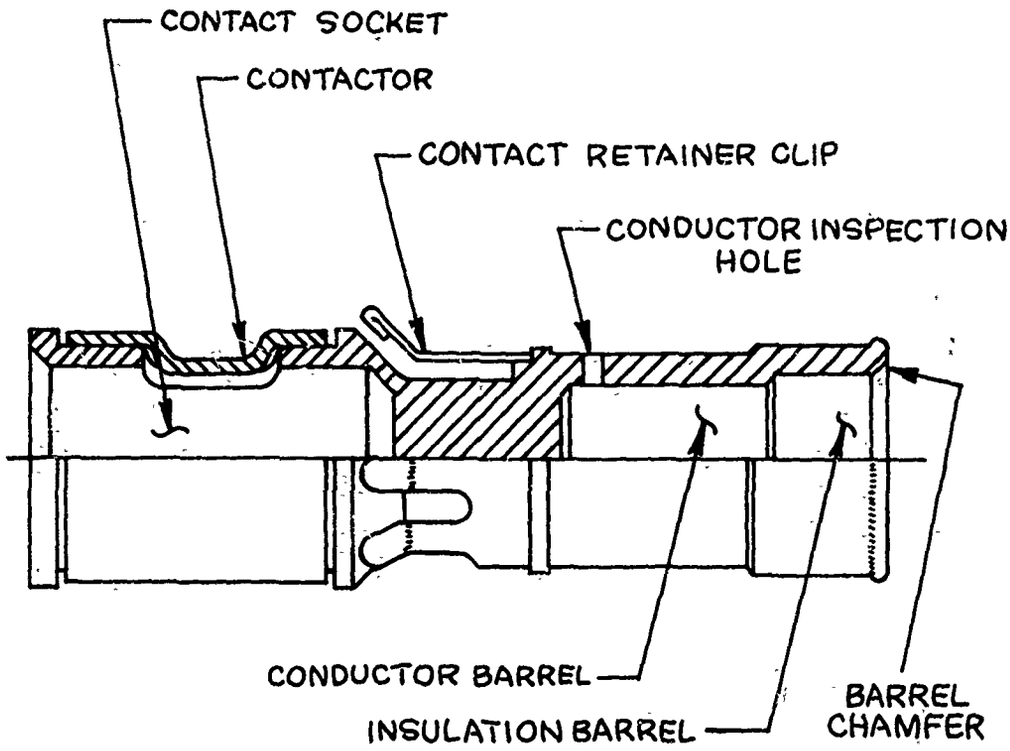

Figure A-1-2. Removable Type Socket Contact Nomenclature

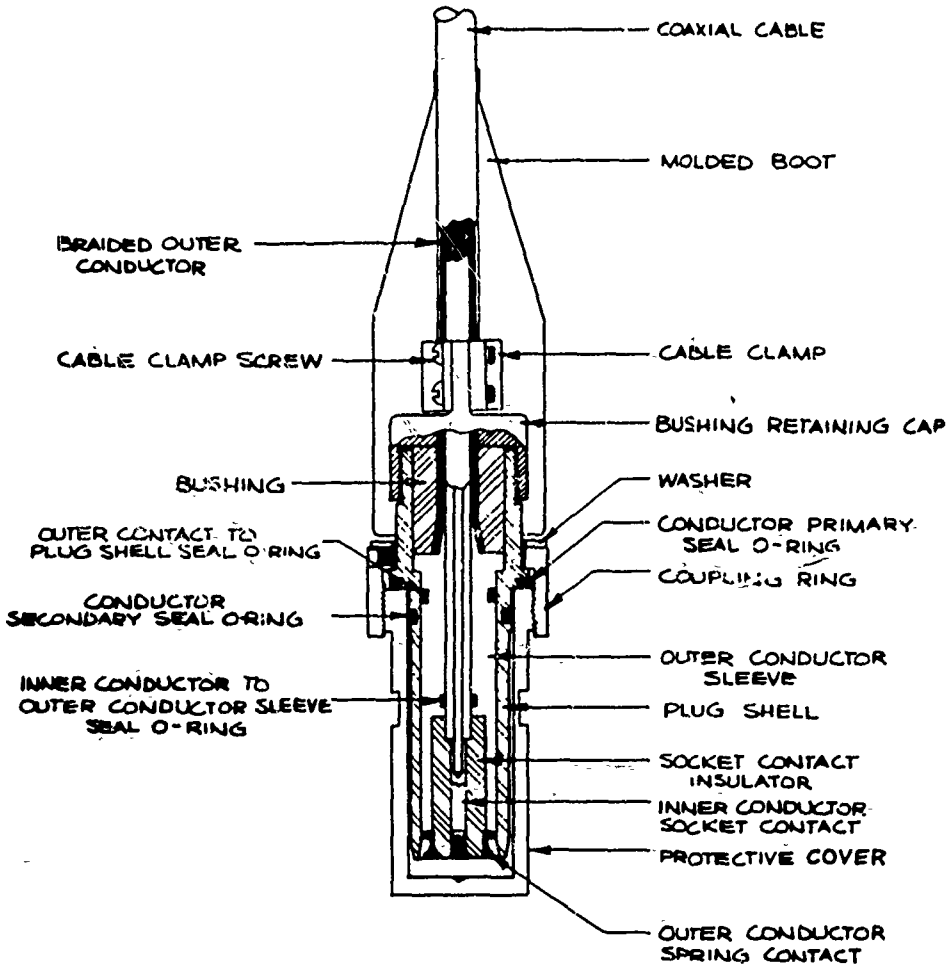

Figure A-1-3. Coaxial Contact Plug Nomenclature

1.2 CONNECTOR RECEPTACLE

CONTACT GASKET - A cured dielectric sealant usually poured into the base of the receptacle cavity. Its purpose is manifold; however, its major significance is in isolating the contact root usually deficient in plating material and hermetic seal from the environment.

CONTACT RELIEF - The front recess distance between the receptacle seal face and the front extremity of the contact.

CONTACT ROOT - The annular surface area of a pin contact in the immediate vicinity of the hermetic glass seal.

COUPLING RING THREAD - The external thread on the receptacle which is engaged by the coupling ring of the plug for purposes of mating and unmating the pair.

FRONT CAVITY - The void in the front part of the receptacle which accommodates the plug nose.

GLASS BEAD - The hollow cylinder glass preforms as it exists prior to the contact fusing operation.

HERMETIC GLASS SEAL - The compression sealed glass bead following the operation in which it is fused to the contact and the receptacle web or header insert.

LOCKNUT - An internally threaded ring which screws into the rear portion of a locknut type receptacle and secures it to a bulkhead bored to receive the assembly.

PIN CONTACT - A male contact having an engagement end that enters into a socket contact.

PROTECTIVE COVER - Cf. "protective cover" in section 1.1.

POLARIZING KEY - A projection inside the receptacle bore which engages a corresponding plug keyway. Together they provide proper relative angular alignment about the axis of the mating connector set.

REAR CAVITY - The void volume in the back side of a receptacle bounded by the inner wall, rear face of the web, and the rear surface of the receptacle.

RECEPTACLE - The female component of a connector set, the cavity of which accommodates the plug shell nose. The receptacle is normally the fixed member of the connector set; hard mounted to a component.

RECEPTACLE REAR SURFACE - The extreme rear face of a receptacle.

RECEPTACLE SEAL FACE - The front surface of a receptacle which provides a seal surface for a plug mounted sealing gasket.

RECEPTACLE SEAL RING - An annular ring which fits between the locknut and parent member (bulkhead, penetrator wall) and provides a seal surface for the connector/penetrator secondary O-ring gasket.

RECEPTACLE SHELL - The main portion of the receptacle which houses and protects the contact.

RECEPTACLE STYLE - The general configuration of a receptacle which better suits it to one type of mounting than another. The various styles are:

a. Straight welded

b. Flange welded

c. In-line

d. Bolted mid-flange

e. Bolted end-flange

f. Locknut

g. Union

REMOVABLE HEADER INSERT ASSEMBLY - A circular disc into which the pin contacts are hermetically sealed. The header insert is the counterpart of the web in a receptacle of integral construction.

SECONDARY SEAL* - The redundant sealing element of a mated connector which is normally not in contact with the environmental medium and only sees service should the primary seal fail.

SOLDER POT - A small cuplike vessel at the rear extremity of a contact designed to accommodate the stripped end of an insulated conductor and retain the mass of fused solder used in joining the two.

TAILPIECE - An adapter threaded to the rear portion of a receptacle which increases its overall length and provides a larger bending surface.

WALL - That portion of a body or shell between the outside surface and the plug cavity or the outside surface and the rear cavity.

WEB - The portion of the body that forms the cross member which retains the contacts. The web is integral with the receptacle wall.

---

*Secondary seals are normally identified by a prefix which denotes the components being sealed, e.g., cover to head secondary seal. The various secondary seals are identified in the accompanying figures.

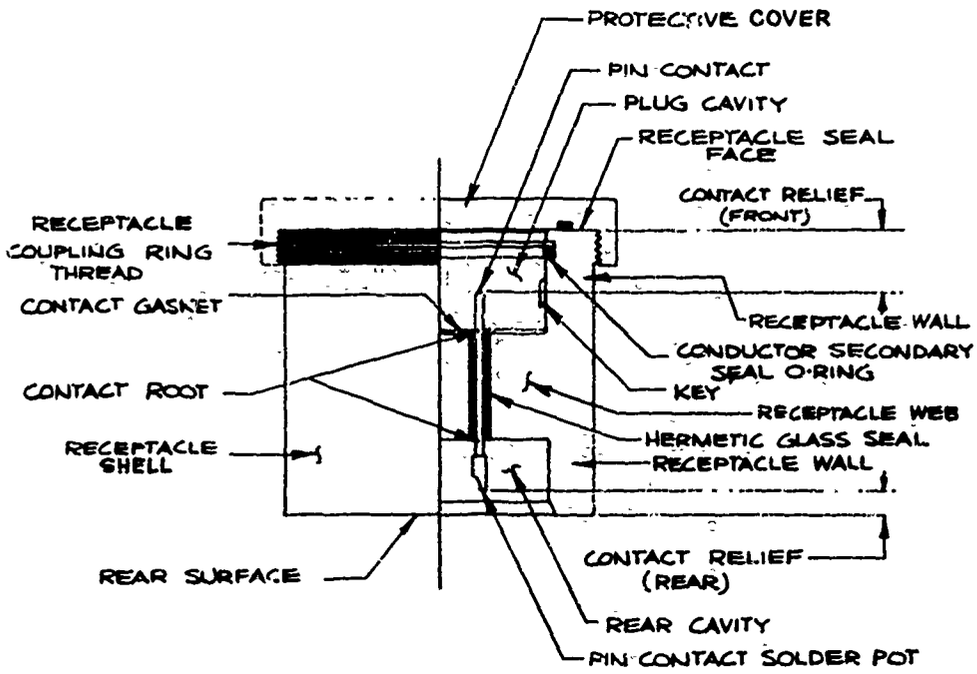

Figure A-1-4. Connector Receptacle Nomenclature

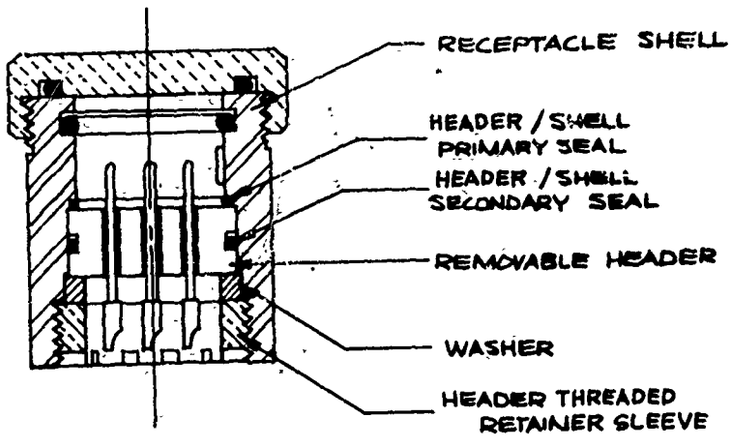

Figure A-1-5. Connector Receptacle Nomenclature

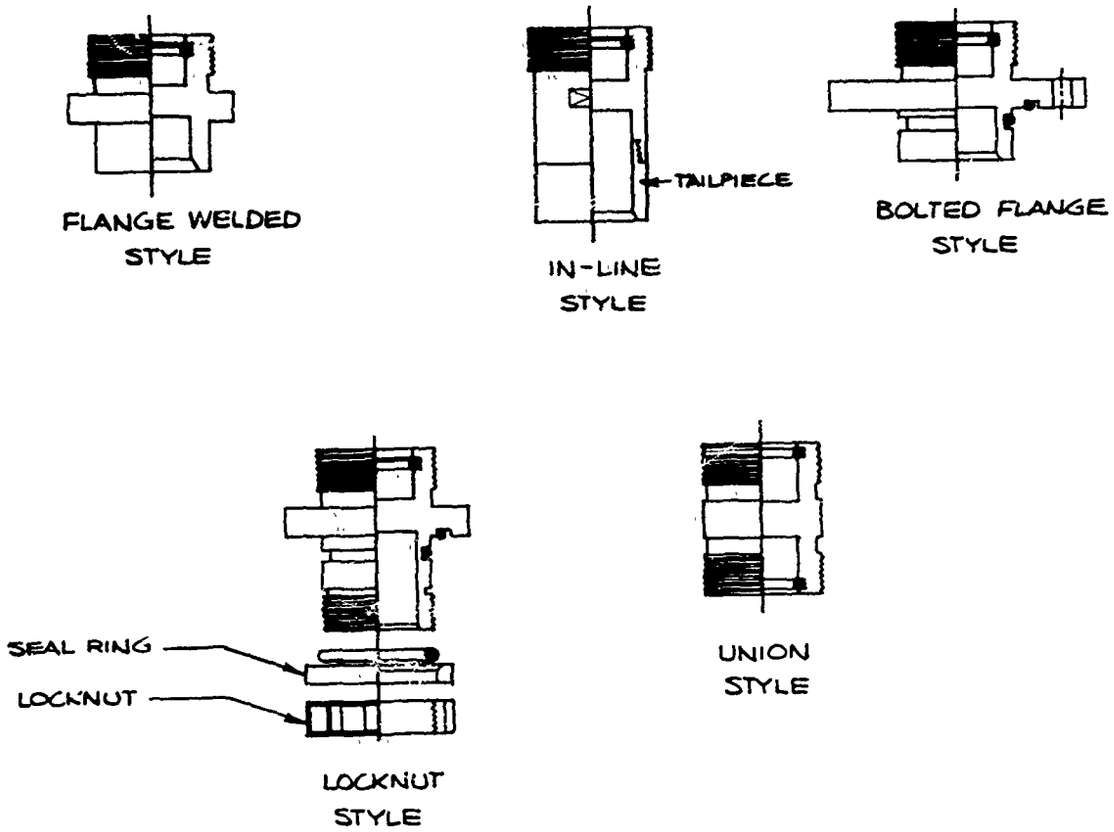

Figure A-1-8. Connector Receptacle Nomenclature

1.3 HULL PENETRATOR ASSEMBLY

DOUBLE ENDED PIN CONTACT - A pin contact having two male engagement ends.

GLAND NUT - A threaded member which, when tightened, compresses a rubber grommet type seal assembly.

GROMMET - An elastomeric seal component usually containing hole(s) through its central portion through which insulated conductors or cables pass and against which the seal is made.

GROMMET RETAINING PLATE - A disc situated on both front and rear face of a grommet seal which tends to distribute the sealing thrust of the gland nut evenly over the grommet, and prevents grommet extrusion into cavities which would allow seal loss.

HEADER INSERT THREADED RETAINER SLEEVE - A short cylindrical member having external threads which screws into the penetrator body shank (front and/or rear). It serves as a retainer for the removable header insert.

HEADER POLARIZING PIN - A key-type element situated on the header. It engages the corresponding keyway or slot in the penetrator shell providing a contact arrangement with the plug polarizing member also in the penetrator shell.

HULL INSERT - A structural member used to reinforce the hull plate in the immediate vicinity of a hole through the hull. It most often is a thick walled cylinder welded into the hull hole.

INBOARD AND OUTBOARD HEADER ASSEMBLY - (Cf. header assembly).

INBOARD/OUTBOARD PLUG ASSEMBLY - Cf. plug in section 1.1.

INNER CONTACT PIN - The innermost contact of a coaxial penetrator.

INSULATOR ASSEMBLY - A component fabricated from a dielectric material and housing contacts (pin and/or socket) and conductors. Each of the latter elements may or may not be removable from the insulator body.

INTERNAL WIRING - The group of insulated conductors which run from one junction to another within the confines of the penetrator assembly.

JUNCTION BOX - A pressure proof device to which are mounted electrical connectors. The connectors are internally interconnected to provide circuit continuity.

JUNCTION BOX CAVITY - The space void within the junction box shell.

JUNCTION BOX COVER - A sealed removable plate allowing access to the internal wiring in the junction box cavity.

JUNCTION BOX COVER FASTENER - The component used to attach the cover to the junction box.

JUNCTION BOX SHELL - The portion of the junction box assembly onto which the receptacles are mounted; it may be integral with or separable from the penetrator shell.

ON AXIS - With respect to the primary axis of the component under discussion.

PENETRATOR ASSEMBLY - A pressure proof device which is designed to allow the passage of electrical circuits through the pressure hull of a vehicle. The penetrator seals and insulates the connectors as they pass through the penetrator shell.

PENETRATOR COMPENSATOR ASSEMBLY - A flexible elastomeric membrane incorporated in a liquid filled penetrator assembly which allows the liquid to expand or contract due to pressure and temperature effects of the seawater environment.

PENETRATOR LOCATING PIN - A projection usually mounted in the hull insert face which engages a corresponding hole or groove in the penetrator. Together they provide a fixed "on axis" location of the penetrator with respect to the hole in the hull. They also prevent penetrator rotation when mounting the penetrator into the hull insert.

PENETRATOR OUTER CONTACT - The outmost annular shaped contact of a coaxial penetrator

PENETRATOR RETAINING NUT - The threaded element which screws onto the end of the penetrator body shank inside the pressure hull and secures the penetrator assembly against the hull insert.

PENETRATOR SEAL RING - An annular ring which fits between the penetrator retaining nut washer and the hull insert. It provides a sealing surface for the penetrator body shank/insert secondary O-ring gasket.

PENETRATOR SHELL - The body portion of the penetrator assembles.

PENETRATOR SHELL NECK - A step in the penetrator body intended as a fail-safe measure. If the outboard portion of the penetrator is carried away, the shell neck provides a bearing surface for a corresponding neck in the hull liner bore to prevent the remainder of the shell from being forced inboard causing catastrophic failure.

PENETRATOR SHELL SHOULDER - The flange near the top of the shank which bears against the hull insert face.

PENETRATOR SHELL WALL - The portion of the penetrator shell between its outside surface and its bore surface.

PENETRATOR SPACER - A part similar to the polarizing sleeve as defined below, but having no plug keying facilities. A spacer cannot serve as a plug polarizing function and hence it is employed inside the penetrator shank inboard plug is used.

POLARIZING KEY - Cf. "key" in section 1.2.

POLARIZING KEYWAY - Cf. "keyway" in section 1.1.

POLARIZING SLEEVE - A hollow cylindrical spacer which keys to and bears against the removable header insert. It is in turn secured from axial movement by the header insert retaining ring. The polarizing sleeve has one or more polarizing keys on its inner surface.

POTTING - A dielectric material poured into a cavity to fill all interstices and cured in place.

PRESSURE PROOF COVER - A device which protects a penetrator, plug or receptacle against full submergence depth pressures.

PRIMARY SEAL - Cf. "primary seal" section 1.1.

RECEPTACLE - Cf. "receptacle" section 1.2.

SECONDARY SEAL - Cf. "secondary seal" section 1.2.

WASHER - A thin hollow disc which fits between the penetrator retaining nut and the seal ring. Its function is to reduce the tendency of seal ring rotation as the retain nut is tightened.

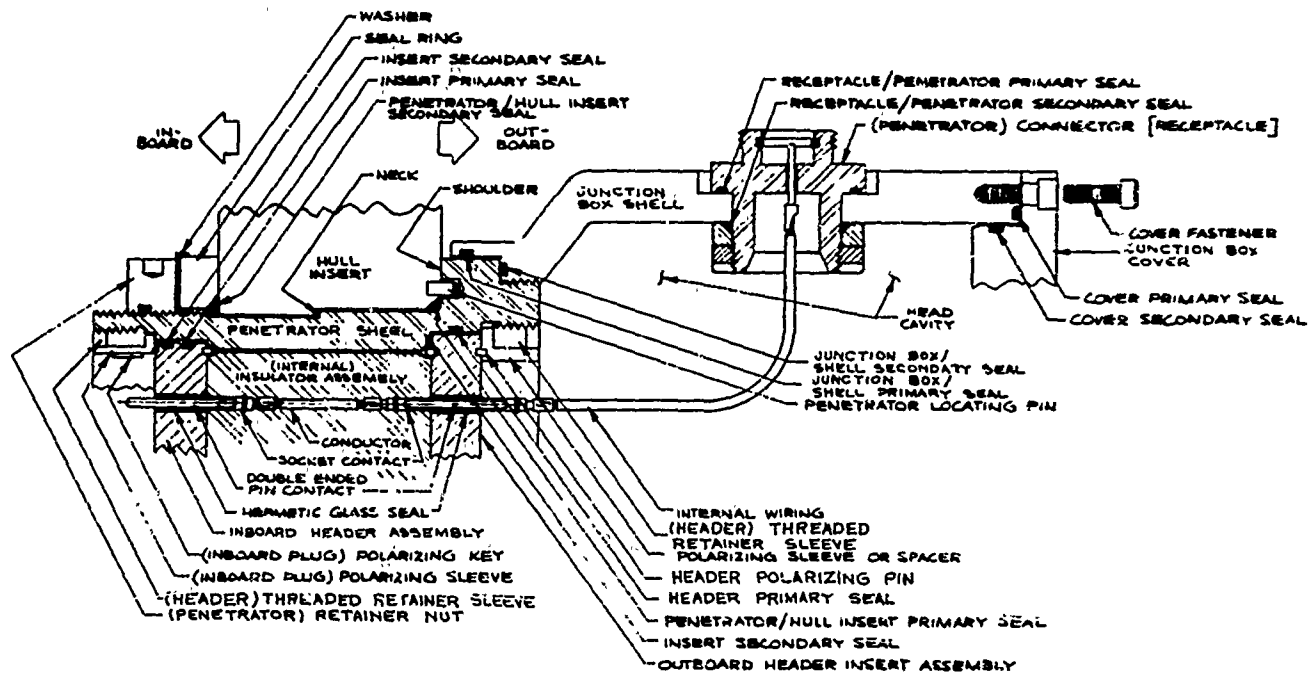

Figure A-1-7. Electrical Penetrator Nomenclature

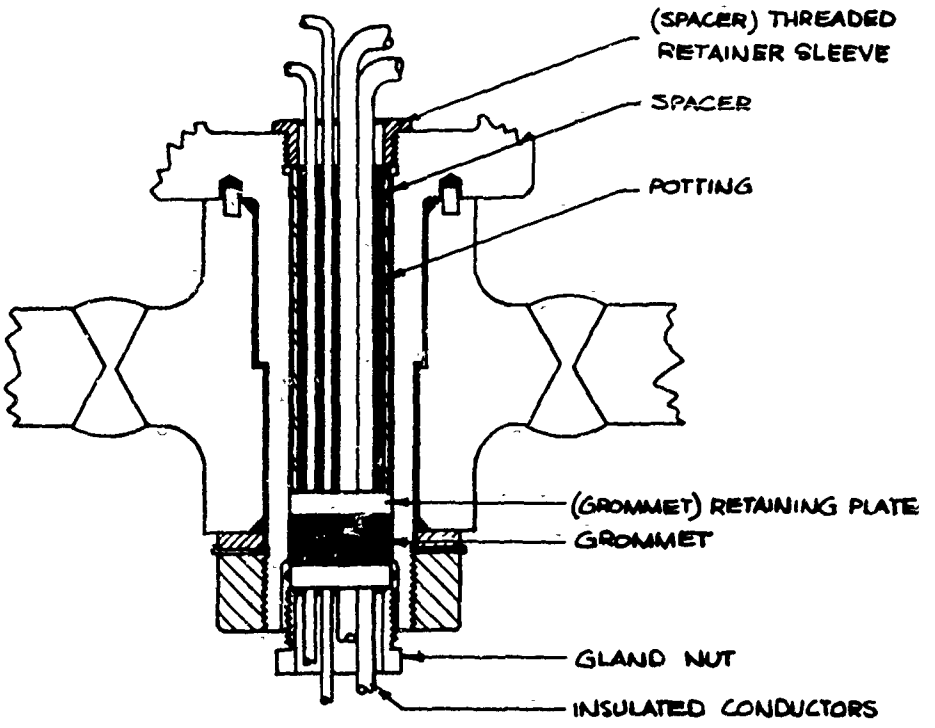

Figure A-1-8. Electrical Penetrator Nomenclature

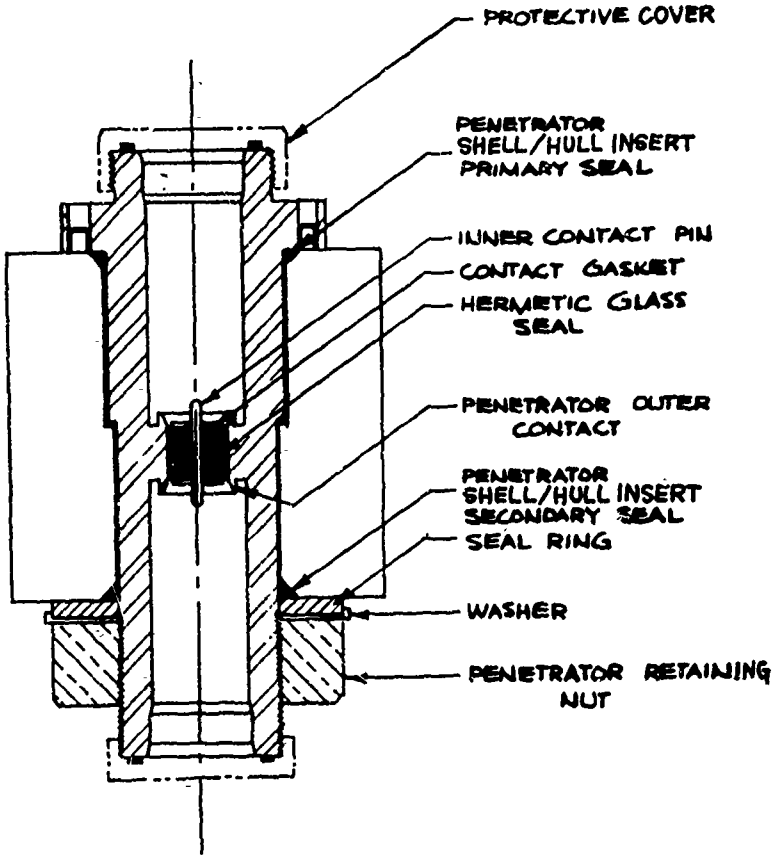

Figure A-1-8. Coaxial Penetrator Nomenclature

APPENDIX 2

TABLES

Table A-2-1. Pertinent Military Material Specifications

NO.	DESCRIPTION	SPECIFICATION
1	Molding, plastics, and molded plastic parts, thermosetting	MIL-M-14
2	Aluminum alloy die castings	QQ-A-591
3	Aluminum alloy bar, rod and wire	QQ-A-225
4	Aluminum alloy forging	QQ-A-367
5	Solder, tin alloy; lead-tin alloy; and lead alloy	QQ-S-571
6	Steel bars, shapes and forgings - corrosion resisting	QQ-S-763
7	Plastic molding material and plastic molded parts, gloss fiber filled diallyl phthalate resin	MIL-P-19833
8	Copper-beryllium alloy bar, rod, and wire (copper alloy No. 172)	QQ-C-530
9	Phosphor bronze bar, plates, rods sheets, etc.	QQ-P-330
10	Rubber, silicone: low and high temperature and tear resistant	ZZ-R-765
11	Nickel-copper-aluminum alloy, wrought (K-Monel)	QQ-N-286
12	Rubber; synthetic, sheet molded, and extruded, for aircraft applications	MIL-R-6855
13	Bronze, aluminum, rod, flat products with finished edges (flat wire, strip, and bar) shapes and forgings	QQ-B-679
14	Nickel-copper-alloy, bar, plate, rod, sheet, strip wire, forgings, and structural and special shaped sections	QQ-N-281
15	Molding and potting compound, chemically cured, polyurethane (polyethes-based)	MIL-M-24041
16	Brass, monal, rod, wire, shapes, etc.	QQ-B-637
17	Polyamide (nylon) plastic rigid: molded parts, rods and flats	MIL-P-17091
18	Titanium and titanium alloy bars, forgings, and forging stock	MIL-T-9047
19	Bronze, nickel aluminum, rod, flat products with finished edges, shapes and forgings	MIL-B-24059

Table A-2-2. Pertinent Military Electrical Cable Specifications

NO.	DESCRIPTION	SPECIFICATION
1	Cable, cord, and wire, electrical shipboard use	MIL-C-915
2	Cable, coaxial, for submarine use	MIL-C-23020
3	Cable, electrical, underwater, seadrone lighting	MIL-C-22929
4	Cable, electronic, tow, for submarine application	MIL-C-23812
5	Cables, power, electrical, reduced diameter type, Naval Shipboard	MIL-C-2194
6	Cables, radio frequency, coaxial, dual coaxial, twin conductor, and twin lead	MIL-C-17
7	Cable, electrical, special purpose, for shipboard use	MIL-C-24145
8	Cable, special purpose, electrical; general specifications for	MIL-C-13777

Table A-2-3. Pertinent Military Electrical Connector Specifications

NO.	DESCRIPTION	SPECIFICATION
1	Connector, electrical, AN type	MIL-C-5015
2	Connector, electrical, circular miniature, quick disconnect	MIL-C-26482
3	Connectors, general purpose, electrical, miniature, circular environmental resisting 200 C ambient temperature	MIL-C-26500
4	Connector, electrical, miniature, quick disconnect (for weapons systems) established reliability	MIL-C-27599
5	Connectors, electrical, miniature, quick disconnect, removable crimp type contacts, established reliability	MIL-C-38999
6	Connector, electric, circular, high density, quick disconnect, environment resisting	MIL-C-81511
7	Connectors, electrical, waterproof, quick disconnect, heavy duty type	MIL-C-22992
8	Connector, electric, circular, environment resisting, general specification for	MIL-C-83723
9	Connectors, coaxial, radio frequency, general specification for	MIL-C-39012
10	Plugs, receptacle, cable assemblies, and hull penetrations, pressure proof, 4000 SBM, general specification for	MIL-C-24231
11	Connector sets, electrical, hermetically sealed, submarine	MIL-C-22249
12	Connector sets, electrical, hermetically sealed, submarine	MIL-C-22539
13	Connector sets, electrical, deep submergence, submarine	MIL-C-24217

Table A-2-4. U.S. Government Plating Specifications

NO.	PLATING OR FINISH	SPECIFICATION
1	Gold	MIL-G-45204
2	Copper	MIL-C-14550
3	Silver	QQ-S-365
4	Tin	MIL-T-10727
5	Zinc	QQ-Z-325
6	Rhodium	MIL-R-46085
7	Chromium	QQ-C-320
8	Aluminum (anodized)	MIL-A-8625
9	Cadmium	QQ-P-416
10	Nickel	QQ-N-290
11	Nickel (electroless)	MIL-C-26074
12	Stainless steel (passivated)	QQ-P-35 and MIL-S-5002
13	Tin-lead	MIL-T-10727
14	Stainless steel (oxidized)	MIL-C-13924
15	Copper (black oxidized)	MIL-F-495

Table A-2-5. Pertinent Military Test Specifications

NO.	DESCRIPTION	SPECIFICATION
1	Test methods for electronic and electrical component parts	MIL-STD-202
2	Test methods for electrical connectors	MIL-STD-1344
3	Standard general requirements for electronic equipment	MIL-STD-454
4	Methods of testing plastics	FED-STD-406
5	Metal test method	FED TEST METHOD 151
6	Calibration: system requirement	MIL-C-45662
7	Surface roughness, wariness, and lay	MIL-STD-10
8	Plastics, organic, general specification, test methods	L-P-406
9	Rubber, sampling and testing	FED TEST METHOD 601
10	Mechanical vibrations of shipboard equipment	MIL-STD-167
11	Shock tests, H.I. (high impact) shipboard machinery equipment and systems, requirements for	MIL-S-901
12	Nondestructive testing requirements for metals	MIL-STD-271
13	Environmental test methods	MIL-STD-810

Table A-2-6. Maximum Conductor Current Rating[2]

WIRE SIZE (awg)	AMPERES[1]
22	9
20	11
18	16
16	22
14	32
12	41
8	55
6	73
4	101
2	135
0	245
00	283
000	328
0000	380

NOTES: 1. Single conductor in free air, continuous loading

2. Conditions are established under a maximum ambient temperature of 135 F and a maximum conductor temperature of 212 F.

Table A-2-7. Fractions of an Inch with Metric Equivalent

FRACTIONS OF AN INCH		DECIMALS OF AN INCH	MILLI-METERS	FRACTIONS OF AN INCH		DECIMALS OF AN INCH	MILLI-METERS
	1/64	0.0156	0.397		33/64	0.5156	13.097
1/32		0.0313	0.794	17/32		0.5313	13.494
	3/64	0.0469	1.191		35/64	0.5469	13.891
1/16		0.0625	1.588	9/16		0.5625	14.288
	5/64	0.0781	1.984		37/64	0.5781	14.684
3/32		0.0938	2.381	19/32		0.5938	15.081
	7/64	0.1094	2.778		39/64	0.6094	15.478
1/8		0.1250	3.175	5/8		0.6250	15.875
	9/64	0.1406	3.572		41/64	0.6406	16.272
5/32		0.1563	3.969	21/32		0.6563	16.669
	11/64	0.1719	4.366		43/64	0.6719	17.066
3/16		0.1875	4.763	11/16		0.6875	17.463
	13/64	0.2031	5.159		45/64	0.7031	17.859
7/32		0.2188	5.556	23/32		0.7188	18.256
	15/64	0.2344	5.953		47/64	0.7344	18.653
1/4		0.2500	6.350	3/4		0.7500	19.050
	17/64	0.2656	6.747		49/64	0.7656	19.447
9/32		0.2813	7.144	25/32		0.7813	19.844
	19/64	0.2969	7.541		51/64	0.7969	20.241
5/16		0.3125	7.938	13/16		0.8125	20.638
	21/64	0.3281	8.334		53/64	0.8281	21.034
11/32		0.3438	8.731	27/32		0.8438	21.431
	23/64	0.3594	9.128		55/64	0.8594	21.828
3/8		0.3750	9.525	7/8		0.8750	22.225
	25/64	0.3906	9.922		57/64	0.8906	22.622
13/32		0.4063	10.319	29/32		0.9063	23.019
	27/64	0.4219	10.716		59/64	0.9219	23.416
7/16		0.4375	11.113	15/16		0.9375	23.813
	29/64	0.4531	11.509		61/64	0.9531	24.209
15/32		0.4688	11.906	31/32		0.9688	24.606
	31/64	0.4844	12.303		63/64	0.9844	25.003
1/2		0.5000	12.700			1.0000	25.400

Table A-2-8. Unit Prefixes

MULTIPLES AND SUBMULTIPLES	PREFIXES	SYMBOLS
$1\ 000\ 000\ 000\ 000 = 10^{12}$	tera	T
$1\ 000\ 000\ 000 = 10^{9}$	giga	G
$1\ 000\ 000 = 10^{6}$	mega	M
$1\ 000 = 10^{3}$	kilo	k
$100 = 10^{2}$	hecto	h
$10 = 10$	deka	da
$0.1 = 10^{-1}$	deci	d
$0.01 = 10^{-2}$	centi	c
$0.001 = 10^{-3}$	milli	m
$0.000\ 001 = 10^{-6}$	micro	
$0.000\ 000\ 001 = 10^{-9}$	nano	n
$0.000\ 000\ 000\ 001 = 10^{-12}$	pico	p
$0.000\ 000\ 000\ 000\ 001 = 10^{-15}$	femto	f
$0.000\ 000\ 000\ 000\ 000\ 001 = 10^{-18}$	atto	a

Table A-2-9. Nomenclature of Frequency Bands

BAND NUMBER (1)	FREQUENCY RANGE	METRIC SUBDIVISION	ADJECTIVAL DESIGNATION
2	30 to 300 hertz	Megametric waves	ELF Extremely low frequency
3	300 to 3000 hertz	-	VF Voice frequency
4	3 to 30 kilohertz	Myriametric waves	VLF Very-low frequency
5	30 to 300 kilohertz	Kilometric waves	LF Low frequency
6	300 to 3000 kilohertz	Hectometric waves	MF Medium frequency
7	3 to 30 megahertz	Decametric waves	HF High frequency
8	30 to 300 megahertz	Metric waves	VHF Very-high frequency
9	300 to 3000 megahertz	Decimetric waves	UHF Ultra-high frequency
10	3 to 30 gigahertz	Centimetric waves	SHF Super-high frequency
11	30 to 300 gigahertz	Millimetric waves	EHF Extremely high frequency
12	300 to 3000 gigahertz or 3 terahertz	Decimillimetric waves	-

NOTES: 1 "Band Number N" extends from 0.3×10^N to 3×10^N hertz. The upper limit is included in each band; the lower limit is excluded.

Table A-2-10. Deep Submergence Tables

FEET	0	100	200	300	400	500	600	700	800	900
Fathoms	0	16.7	33.3	50.0	66.7	83.3	100.0	116.7	133.3	150.0
Meters	0	30.5	61.0	91.4	121.9	152.4	182.9	213.4	243.8	274.3
Pressure (decibars)[1]	0	30.8	61.6	94.4	123.2	154.2	185.1	216.1	247.2	278.3
Pressure (psi)[2]	0	44.4	89.0	133.6	178.3	223.1	268.0	312.9	358.0	403.1

FEET	1000	1100	1200	1300	1400	1500	1600	1700	1800	1900
Fathoms	166.7	183.3	200.0	216.7	233.3	250.0	266.7	283.3	300	316.7
Meters	304.8	335.3	365.8	396.2	426.7	457.2	487.7	518.2	548.6	579.1
Pressure (decibars)	309.0	340.3	371.6	402.9	434.5	465.9	497.4	528.8	560.3	592.3
Pressure (psi)	448.3	493.6	539.0	584.5	630.0	675.7	721.4	767.3	813.2	859.1

FEET	FATHOMS	METERS	PRESSURE (decibars)	PRESSURE (psi)
2,000	333.3	610	614	890
3,000	500.0	914	921	1,336
4,000	666.7	1,219	1,232	1,783
5,000	833.3	1,524	1,542	2,231
6,000	1,000.0	1,829	1,851	2,680
7,000	1,166.7	2,134	2,161	3,129
8,000	1,333.3	2,438	2,472	3,580
9,000	1,500.0	2,743	2,783	4,031
10,000	1,666.7	3,048	3,095	4,483
11,000	1,833.3	3,353	3,407	4,936
12,000	2,000.0	3,658	3,720	5,390
13,000	2,166.7	3,962	4,033	5,845
14,000	2,333.3	4,267	4,345	6,300
15,000	2,500.0	4,572	4,659	6,757
16,000	2,666.7	4,877	4,974	7,214
17,000	2,833.3	5,182	5,288	7,673
18,000	3,000.0	5,486	5,603	8,132
19,000	3,166.7	5,791	5,918	8,591
20,000	3,333.3	6,096	6,241	9,052
21,000	3,500.0	6,401	6,555	9,508
22,000	3,666.7	6,706	6,874	9,970
23,000	3,833.3	,010	7,192	10,432

Table A-2-10. (cont'd)

FEET	FATHOMS	METERS	PRESSURE (decibars)	PRESSURE (psi)
24,000	4,000.0	7,315	7,512	10,896
25,000	4,166.7	7,620	7,833	11,361
26,000	4,333.3	7,925	8,154	11,827
27,000	4,500.0	8,230	8,476	12,294
28,000	4,666.7	8,534	8,797	12,760
29,000	4,833.3	8,839	9,120	13,228
30,000	5,000.0	9,144	9,443	13,697
31,000	5,166.7	9,449	9,767	14,167
32,000	5,333.3	9,754	10,092	14,638
33,000	5,500.0	10,058	10,417	15,109
34,000	5,666.7	10,363	10,742	15,581
35,000	5,833.3	10,668	11,069	16,055

NOTES: 1. Salinity 35 o/oo, Temperature 0 C.

2. Calculated with Formula: $P = D_m \quad 1.4559 + (D_m \times 0.46 \times 10^{-5})$
Where D_m Depth in Meters.

Table A-2-11. Deep Submergence Tables

FEET	FATHOMS	METERS	PRESSURE (decibars)[1]	PRESSURE (psi)[2]
1,000	166.7	305	308	444
2,000	333.3	610	616	890
3,000	500.0	915	924	1,336
4,000	666.7	1,220	1,232	1,783
5,000	833.3	1,525	1,542	2,231
6,000	1,000.0	1,830	1,851	2,680
7,000	1,166.7	2,135	2,161	3,129
8,000	1,333.3	2,440	2,472	3,580
9,000	1,500.0	2,745	2,783	4,031
10,000	1,666.7	3,050	3,095	4,483
11,000	1,833.3	3,355	3,407	4,936
12,000	2,000.0	3,660	3,720	5,390
13,000	2,166.7	3,965	4,033	5,845
14,000	2,333.3	4,270	4,345	6,300
15,000	2,500.0	4,575	4,659	6,757
16,000	2,666.7	4,880	4,974	7,214
17,000	2,833.3	5,185	5,288	7,673
18,000	3,000.0	5,490	5,603	8,132
19,000	3,166.7	5,795	5,918	8,592
20,000	3,333.3	6,100	6,233	9,052

NOTES: 1. Salinity 35 o/oo, Temperature 0 C.

2. Calculated with Formula: $P=D_m \quad 1,4559\ (D_m \times .46\times10^{-5})$

Where D_m = Depth in Meters.

Table A-2-12. Relation Between Various Pressure Units

THERE ARE	IN ONE: DYNE CM^{-2}	BAR	DECI-BAR	MILLI-BAR	PSI	ATM (stnd)	IN. HG. (45 F)	MM. HG. (45 F)
dynes cm^{-2}	one	10^6	10^5	10^3	6.8947×10^4	1.0133×10^6	3.3862×10^7	1.3332×10^3
bars	10^{-6}	one	10^{-1}	10^{-3}	6.8947×10^{-2}	1.0133	3.3862×10^{-2}	1.3332×10^{-3}
deci-bars	10^{-5}	10^1	one	10^{-2}	6.8947×10^{-1}	1.0133×10^1	3.3862×10^{-1}	1.3332×10^2
milli-bars	10^{-3}	10^3	10^2	one	6.8947×10^1	1.0133×10^3	3.3862×10^1	1.3332
psi	1.4504×10^{-5}	1.4504×10^1	1.4504	1.4504×10^{-2}	one	1.4697×10^1	4.9113×10^{-1}	1.9337×10^{-2}
atm (stnd)	9.8687×10^{-7}	9.8687×10^{-1}	9.8687×10^{-2}	9.8687×10^{-4}	6.8042×10^{-2}	one	3.3418×10^{-2}	1.3157×10^{-3}
in. Hg. (45 F)	2.9531×10^{-5}	2.9531×10^1	2.9531	2.9531×10^{-2}	2.0361	2.9924×10^1	one	3.9371×10^{-2}
mm. Hg. (45 F)	7.5008×10^{-4}	7.5008×10^6	7.5008×10^1	7.5008×10^{-1}	5.1717×10^1	7.6008×10^2	2.5400×10^1	one

Table A-2-13. List of Manned Deep Submergence Vehicles

VEHICLE	YEAR IN SERVICE	OPERATING DEPTH (feet)
Bathysphere	1930	1,400
Bathysphere	1934	3,028
Benthoscope	1949	4,500
Trieste I	1953	10,400
FNRS-3	1954	13,287
Diving Saucer	1960	1,000
Trieste I	1960	35,800
Archimede	1962	31,320
Trieste II	1964	Classified
Pisces I	1966	2,500
Pisces II	1968	4,000
Deepstar 2000	1969	2,000
Deepstar 4000	1966	4,000
Deep Quest	1967	8,000+
Benthos V	1963	600
Star II	1966	1,200
Star III	1965	2,000
Asherah	1964	600
Alvin	1965	6,900
Kurushio II	1960	650
Shelf Diver	----	----
Deep Diver	1966	----
DSRV	1969	3,500
Ben Franklin	1968	4,000
Aluminaut	1965	15,000
Dolphin	1968	Classified
NR-1	1969	Classified
Submaray	1963	300
Shinkai	1968	----
Mesoscaph	1964	3,500
Cubmarine	1962	150
DOWB	1968	6,500
Beaver Mk IV	1968	----
DSRV	1971	3,500

Table A-2-14. Units of Depth Measurement on Charts of Various Nations

NATION	UNIT OF DEPTH MEASUREMENT	EQUIVALENT IN UNITED STATES' UNITS (feet)	(fathoms)
Argentina	Braza	6.000	1.000
Australia	Fathom	6.00	1.000
Belgium	Metre	3.281	0.547
Brazil	Metro	3.281	0.547
Canada	Fathom	6.000	1.000
Chile	Metro	3.281	0.547
Denmark	Favn	6.176	1.029
	Meter	3.281	0.547
Finland	Metre	3.281	0.547
France	Metre	3.281	0.547
Germany	Meter	3.281	0.547
Great Britain	Fathom	6.000	1.000
Greece	Metre (Metpa)	3.281	0.547
Italy	Metre	3.281	0.547
Japan	Metre	3.281	0.547
Netherlands	Vadem	5.905	0.984
	Meter	3.281	0.547
Norway	Favn	6.176	1.029
	Meter	3.281	0.547
Portugal	Metro	3.281	0.547
Russia (USSR)	Sazhen'	6.000	1.000
	Metre	3.281	0.547
Thailand	Metre	3.281	0.547
Spain	Metro	3.281	0.547
Sweden	Famn	5.844	0.974
	Meter	3.281	0.547
Turkey	Fathom (Kulac)	6.000	1.000
Uruguay	Metro	3.281	0.547
Yugoslavia	Metar	3.281	0.547

Deep Ocean Technology
Report Distribution List
January, 1971

OSD DDR&E (Mr. G. Cann)
OP098
OP23
NAVMAT 03
NAVMAT 034
NAVMAT 0341
NAVMAT 0342
NAVSHIPS 03
NAVSHIPS 03424 (5)
NAVSHIPS PMS 381
NAVSHIPS 381 D
NAVSHIPS PMS 395
NAVSHIPS PMS 395A3
NAVSHIPS PMS 395A2
NAVSHIPS PMS 395A1
NAVSHIPS PMS 395A4
NAVSHIPS PMS 396
NAVSHIPS PMS 393
NAVSHIPS OOC (2)
NAVSHIPS 90
NAVSHIPS 08
NAVSHIPS 2052 (2)
NAVFAC 03
NAVFAC 032
NAVORD 03
NAVAIR 03
NAVELEX 03
NAVSEC 6000
NAVSEC 6141
NAVSEC 6157E (15)
OCEANAV
NAVOCANO
CNR
ONR 466
ONR 485
NRL 8400
NRL 8430
USCG
NUSL (NUSC)
NCEL
NELC, San Diego
NAVUSEARANDCEN, San Diego (2)
NAVUSEARANDCEN, Hawaii, Kailua
SUBDEVGRUONE 01
CO DSV TURTLE SEACLIFF
CO DOLPHIN AGS 555
CO TRIESTE II
MARE ISLAND NAVAL SHIPYARD
(Code 280) (2)
DDC (20)
Woods Hole Oceanographic Institute (2)
Woods Hole, Massachusetts 02543
Attention: W. Rainnie

Applied Physics Laboratory
University of Washington
Seattle, Washington 98105

Ordnance Research Laboratories
University of Pennsylvania
Box 30
State College, Pennsylvania 16802

Marine Physical Laboratory
Scripps Institute of Oceanography
San Diego, California 92101

NSRDC L42 Carde rock, Maryland (2)
NSRDC H90, Carde rock, Maryland
NSRDC P710, Panama City, Florida
NSRDL A723.8, Annapolis, Maryland (5)
CO NR-1
Supships, Groton
Supships, Newport News
Portsmouth, NSY
Supships, Pascagula
ASNRD ATTN: Cdr. D. Walsh

Marine Board National Academy of Engineering
2101 Constitution Ave.
Washington D.C. 20418
Attn. Capt. J. Boller

Deep Ocean Technology
Report Distribution List
January, 1971

Philadelphia Naval Shipyard
Norfolk Naval Shipyard
Charleston Naval Shipyard
Puget Sound Naval Shipyard
Pearl Harbor Naval Shipyard
NAVMAT PM 1
NAVMAT PM 7
NAVMAT PM 13

NAVSHIPS 0342
NAVSHIPS 037
NAVSHIPS 035
NOL - White Oak
COMSUBPAC
COMSUBPLANT
Massachusetts Institute of Technology
Attn. Cdr. W. Deitz

Sheet 2

UNCLASSIFIED

Security Classification

DOCUMENT CONTROL DATA - R & D

(Security classification of title, body of abstract and indexing annotation must be entered when the overall report is classified)

1. ORIGINATING ACTIVITY *(Corporate author)* NAVAL SHIP ENGINEERING CENTER	2a. REPORT SECURITY CLASSIFICATION UNCLASSIFIED 2b. GROUP

3. REPORT TITLE

HANDBOOK OF VEHICLE ELECTRICAL PENETRATORS, CONNECTORS AND HARNESSES FOR DEEP OCEAN APPLICATIONS.

4. DESCRIPTIVE NOTES *(Type of report and inclusive dates)*

5. AUTHOR(S) *(First name, middle initial, last name)*

Haworth, R. F. Sanford, H. L. Redding, J. J. E. Heying A. Colby
Miner, H. C. Speziali, V. A. Cameron, R. A. R. Freyer R. Geisert

6. REPORT DATE June 1971	7a. TOTAL NO. OF PAGES 326	7b. NO. OF REFS
8a. CONTRACT OR GRANT NO. N00024-68-C-5434 b. PROJECT NO. S-4636 c. Task 12318 d.	9a. ORIGINATOR'S REPORT NUMBER(S) U413-71-017 9b. OTHER REPORT NO(S) *(Any other numbers that may be assigned this report)*	

10. DISTRIBUTION STATEMENT

This document is subject to special export controls and each transmittal to foreign governments or foreign nationals may be made only with prior approval of CDR, NAVSHIPS (SHIPS 03424), Washington, D.C. 20360

11. SUPPLEMENTARY NOTES	12. SPONSORING MILITARY ACTIVITY NAVSEC, CODE 6157E

13. ABSTRACT

DD FORM 1 NOV 65 1473 (PAGE 1)

S/N 0101-807-6801

UNCLASSIFIED

Security Classification

UNCLASSIFIED
Security Classification

14. KEY WORDS	LINK A ROLE	LINK A WT	LINK B ROLE	LINK B WT	LINK C ROLE	LINK C WT
DEEP OCEAN VEHICLE ELECTRICAL PENETRATOR.						

DD FORM 1 NOV 65 1473 (BACK)
(PAGE 2)

UNCLASSIFIED
Security Classification

USER COMMENT RETURN FORM

_____
(date)

From:
To: Deep Ocean Technology Program

Subj: Improvement of Handbook of Electric Cable Technology for Deep Ocean Applications, Suggestions for

1. It is suggested that the handbook could be improved by making the following changes:

2. Reasons for suggested changes are:

3. It is further suggested that the handbook could be made more useful to users by adding material on the following (provide information or indicate sources of information if known):

_____ _____
(signature) (date)

_____
(title, organization)

(Fold so that return address is out, tape, and mail
No postage required.)

DEPARTMENT OF THE NAVY
NAVAL SHIP ENGINEERING CENTER
HYATTSVILLE, MARYLAND 20782

OFFICIAL BUSINESS

Postage and Fees Paid
Department of the Navy

Commanding Officer
Naval Ship Engineering Center (Code 6157E)
Hyattsville, Maryland 20782