UNCLASSIFIED

AD NUMBER

AD884597

NEW LIMITATION CHANGE

TO

Approved for public release, distribution unlimited

FROM

Distribution authorized to U.S. Gov't. agencies and their contractors; Administrative/Operational Use; APR 1971. Other requests shall be referred to Air Force Materials Lab., Wright-Patterson AFB, OH 45433.

AUTHORITY

AFML ltr, 13 Mar 1973

THIS PAGE IS UNCLASSIFIED

AD 884 597

Massachusetts Inst of Tech
Cambridge Lab for Insulat—ETC

Dielectric Spectroscopy of High-Temperature Materials.

Westphal,W. B.

F33615-70-C1220
AFML-TR-66

FLD/GD 14/2

Unclassified

Security Classification

DOCUMENT CONTROL DATA - R&D

(Security classification of title, body of abstract and indexing annotation must be entered when the overall report is classified)

1. ORIGINATING ACTIVITY (Corporate author)

Laboratory for Insulation Research
Massachusetts Institute of Technology
Cambridge, Massachusetts 02139

2a. REPORT SECURITY CLASSIFICATION

2b. GROUP

3. REPORT TITLE

Dielectric Spectroscopy of High-Temperature Materials

4. DESCRIPTIVE NOTES (Type of report and inclusive dates)

Technical Report

5. AUTHOR(S) (Last name, first name, initial)

W. B. Westphal and J. Iglesias

6. REPORT DATE

April 1971

7a. TOTAL NO. OF PAGES

26

7b. NO. OF REFS

7

8a. CONTRACT OR GRANT NO.

F33615-70-1220

b. PROJECT NO

c.

d.

9a. ORIGINATOR'S REPORT NUMBER(S)

9b. OTHER REPORT NO(S) (Any other numbers that may be assigned this report)

AFML-TR-71-66

10. AVAILABILITY/LIMITATION NOTICES

This document is subject to special export controls and each transmittal to foreign nations may be made only with prior approval of AF Materials Laboratory

11. SUPPLEMENTARY NOTES

12. SPONSORING MILITARY ACTIVITY

Air Force Materials Laboratory
Air Force Systems Command
Wright-Patterson Air Force Base, Ohio

13. ABSTRACT

Measuring techniques for extending dielectric-constant and loss measurements to liquid-nitrogen temperature at 10 MHz, to 2000°C at 100 MHz, and to 1600°C at 90 GHz are discussed. High-temperature measurements on spinel and sapphire are included in the dielectric data accumulated during this contract. Programs in Fortran IV are given for the general standing-wave method calculations and for covered high-loss samples one-quarter wavelength from the end of hollow waveguide.

DD FORM 1 JAN 64 1473

Unclassified

Unclassified

Security Classification

14. KEY WORDS	LINK A ROLE	LINK A WT	LINK B ROLE	LINK B WT	LINK C ROLE	LINK C WT
Dielectric constant measurements						
Dielectric loss measurements						
High-temperature materials						
Capacitance bridge						
Resonant cavity						

INSTRUCTIONS

1. ORIGINATING ACTIVITY: Enter the name and address of the contractor, subcontractor, grantee, Department of Defense activity or other organization *(corporate author)* issuing the report.

2a. REPORT SECURITY CLASSIFICATION: Enter the overall security classification of the report. Indicate whether "Restricted Data" is included. Marking is to be in accordance with appropriate security regulations.

2b. GROUP: Automatic downgrading is specified in DoD Directive 5200.10 and Armed Forces Industrial Manual. Enter the group number. Also, when applicable, show that optional markings have been used for Group 3 and Group 4 as authorized.

3. REPORT TITLE: Enter the complete report title in all capital letters. Titles in all cases should be unclassified. If a meaningful title cannot be selected without classification, show title classification in all capitals in parenthesis immediately following the title.

4. DESCRIPTIVE NOTES: If appropriate, enter the type of report, e.g., interim, progress, summary, annual, or final. Give the inclusive dates when a specific reporting period is covered.

5. AUTHOR(S): Enter the name(s) of author(s) as shown on or in the report. Enter last name, first name, middle initial. If military, show rank and branch of service. The name of the principal author is an absolute minimum requirement.

6. REPORT DATE: Enter the date of the report as day, month, year, or month, year. If more than one date appears on the report, use date of publication.

7a. TOTAL NUMBER OF PAGES: The total page count should follow normal pagination procedures, i.e., enter the number of pages containing information.

7b. NUMBER OF REFERENCES: Enter the total number of references cited in the report.

8a. CONTRACT OR GRANT NUMBER: If appropriate, enter the applicable number of the contract or grant under which the report was written.

8b, 8c, & 8d. PROJECT NUMBER: Enter the appropriate military department identification, such as project number, subproject number, system numbers, task number, etc.

9a. ORIGINATOR'S REPORT NUMBER(S): Enter the official report number by which the document will be identified and controlled by the originating activity. This number must be unique to this report.

9b. OTHER REPORT NUMBER(S): If the report has been assigned any other report numbers *(either by the originator or by the sponsor)*, also enter this number(s).

10. AVAILABILITY/LIMITATION NOTICES: Enter any limitations on further dissemination of the report, other than those imposed by security classification, using standard statements such as:

(1) "Qualified requesters may obtain copies of this report from DDC."

(2) "Foreign announcement and dissemination of this report by DDC is not authorized."

(3) "U. S. Government agencies may obtain copies of this report directly from DDC. Other qualified DDC users shall request through _____."

(4) "U. S. military agencies may obtain copies of this report directly from DDC. Other qualified users shall request through _____."

(5) "All distribution of this report is controlled. Qualified DDC users shall request through _____."

If the report has been furnished to the Office of Technical Services, Department of Commerce, for sale to the public, indicate this fact and enter the price, if known.

11. SUPPLEMENTARY NOTES: Use for additional explanatory notes.

12. SPONSORING MILITARY ACTIVITY: Enter the name of the departmental project office or laboratory sponsoring *(paying for)* the research and development. Include address.

13. ABSTRACT: Enter an abstract giving a brief and factual summary of the document indicative of the report, even though it may also appear elsewhere in the body of the technical report. If additional space is required, a continuation sheet shall be attached.

It is highly desirable that the abstract of classified reports be unclassified. Each paragraph of the abstract shall end with an indication of the military security classification of the information in the paragraph, represented as *(TS)*, *(S)*, *(C)*, or *(U)*.

There is no limitation on the length of the abstract. However, the suggested length is from 150 to 225 words.

14. KEY WORDS: Key words are technically meaningful terms or short phrases that characterize a report and may be used as index entries for cataloging the report. Key words must be selected so that no security classification is required. Identifiers, such as equipment model designation, trade name, military project code name, geographic location, may be used as key words but will be followed by an indication of technical context. The assignment of links, roles, and weights is optional.

Unclassified

Security Classification

Errata Sheet

p. 11, Program 1, lines 4 and 5 from top have to be retyped so that cosine is moved 3 spaces to the right.

p. 21, III. MISCELLANEOUS INORGANICS AND MIXTURES, the tabulations should read:

Concrete pavement — California Highway Department

Sample	Density (g/cm^3)	H_2O (%)	(MHz)	0.1	1	10	100
S1	2.284	0	κ	9.05	7.97	7.01	6.57
			tan δ	.0946	.0913	.0730	.0536
S1		25.89	κ	176.5	69.2	23.5	13.2
			tan δ	.822	1.088	.734	.485

Asphalt pavement — California Highway Department

Sample	Density (g/cm^3)	H_2O (%)	(Hz)	10^5	10^6	10^7	10^8
S	2.06	0	κ	4.51	4.34	4.21	4.14
			tan δ	.0280	.0221	.0181	.0198
S		2.55	κ	42.0	17.7	9.03	6.54
			tan δ	.875	.638	.444	.233
L	2.46	0	κ	4.79	4.73	4.70	4.61
			tan δ	.0187	.0158	.0123	.0121
L		~0.36	κ	14.48	9.28	6.65	6.01
			tan δ	.368	.280	.190	.104

Dielectric Spectroscopy of High-Temperature Materials

W. B. Westphal and J. Iglesias

Laboratory for Insulation Research
Massachusetts Institute of Technology
Cambridge, Massachusetts

The distribution of this report is limited because of data and information related to a technology restricted by U.S. Export Control Acts

Dielectric Spectroscopy of High-Temperature Materials

W. B. Westphal and J. Iglesias

Laboratory for Insulation Research
Massachusetts Institute of Technology
Cambridge, Massachusetts

The distribution of this report is limited because of data and information related to a technology restricted by U.S. Export Control Acts

FOREWORD

This report was prepared by the Massachusetts Institute of Technology, Laboratory for Insulation Research, Cambridge, Massachusetts, under USAF Contract F33615-70C-1220. This Contract was initiated under Project No. 7371, "Exploratory Development in Electrical, Electronic, and Magnetic Materials," Task No. 737101, "Dielectric Materials." The work was administered under direction of the AF Materials Laboratory, with Mr. W. G. D. Frederick acting as project engineer.

This Final Report covers work conducted from February 1, 1970 to January 31, 1971, and was submitted on February 26, 1971 by the authors for publication.

This technical report has been reviewed and is approved.

Charles E. Ehrenfried
CHARLES E. EHRENFRIED
Major, USAF
Chief, Electromagnetic Materials Br.
Materials Physics Division
Air Force Materials Laboratory

ABSTRACT

Measuring techniques for extending dielectric-constant and loss measurements to liquid-nitrogen temperature at 10 MHz, to 2000°C at 100 MHz, and to 1600°C at 96 GHz are discussed. High-temperature measurements on spinel and sapphire are included in the dielectric data accumulated during this contract. Programs in Fortran IV are given for the general standing-wave method calculations and for covered high-loss samples one-quarter wavelength from the end of hollow waveguide.

TABLE OF CONTENTS

	Page
Introduction	1
Measurement and Instrumentation Techniques	1
Low-Frequency Bridges	1
Extension for a Two-Terminal Bridge	3
Resonant Cavity for 100 MHz	4
Resonant Cavity Method for Soft Materials	6
90-GHz Equipment	7
Programming	8
References	10
Program I	11
Program II	13
Index to Dielectric Data	16

ILLUSTRATIONS

Figure		Page
1.	Schematic of precision low-frequency bridge.	2
2.	Photographs of bridge switch.	3
3.	Photographs of bridge extension: (a) for above ambient; (b) for below ambient.	3
4.	Reentrant cavity: (a) cross section; (b) photograph; (c) symmetry plane; (d) equivalent circuit of reentrant cavity.	5
5.	Equipment for measurement of Q of reentrant cavity.	6
6.	High-temperature pressure welding of resonant cavity; (a) foil formed on mandrel, two are made. Faces are welded by hot-pressing; (b) welding of flanges by hot-pressing with sample inside; (c) finished dielectric-filled cavity; (d) cavity in graphite container as used during measurements.	6

INTRODUCTION

In the first section of this report extensions of measurement techniques developed since March 31, 1970, are described. These include a method for using the dielectric-filled cavity technique with soft materials, details of design for a 100 MHz reentrant cavity, and the use of a light pipe for 3-mm measurements. The next section discusses programming for dielectric calculations. The final section lists measurement data on materials and is supplementary to AFML-TR-70-138.

MEASUREMENT INSTRUMENTATION AND TECHNIQUES

Low-Frequency Bridge*

Acquisition of a General Radio Type 1620-AP capacitance measuring assembly has allowed us to recalibrate the precision capacitor used in our two-terminal bridge for high-temperature measurements. The basic accuracy of 0.01% assures that capacitance measurement errors on solid samples will be negligible in comparison to thickness measurement errors.

Experience in measuring small (<2 pf) high-loss, three-terminal samples has indicated the need for more precise measurements than can be obtained with any known direct-reading bridge. For example, the accuracy in measuring a 1-pf, 1-megohm sample at 100 cycles is limited as follows:

The GR 1615 can be balanced only with M = 10 or greater which limit capacitance resolution to 0.01 pf (1%). In addition, capacitance of the conductance (G) network causes an unspecified error.

On the GR 1616, the capacitance resolution is not a significant error, but the specified possible error due to the capacitance of the G network is 0.03 pf (3%).

On our present laboratory bridges[1)] and the Cole-Gross bridge[2)] errors due to the capacitance of the G network can be made small only by a sacrifice in sensitivity by increased loading of the detector terminals.

The Harris bridge avoids the above problems by using a two-phase source but the practical limit of air capacitors in the G phase is about 1000 pf, corresponding to a sample resistance of 1.6 megohms minimum at 100 cycles (if full voltage is applied to the sample).[3)]

A new bridge is under construction which should provide routine operation with capacitance errors due to the G network of 0.001 pf and provides an adjustment to reduce the error toward zero for any sample with extra bridge balances. The bridge shown schematically in Fig. 1 is designed for use in the frequency range 0.5 Hz (with 1 volt) to 1 kHz. Six digit resolution in C is provided by 2

---

* Work described in this section was jointly sponsored by ONR (Contract N00014-67A-0204-0003).

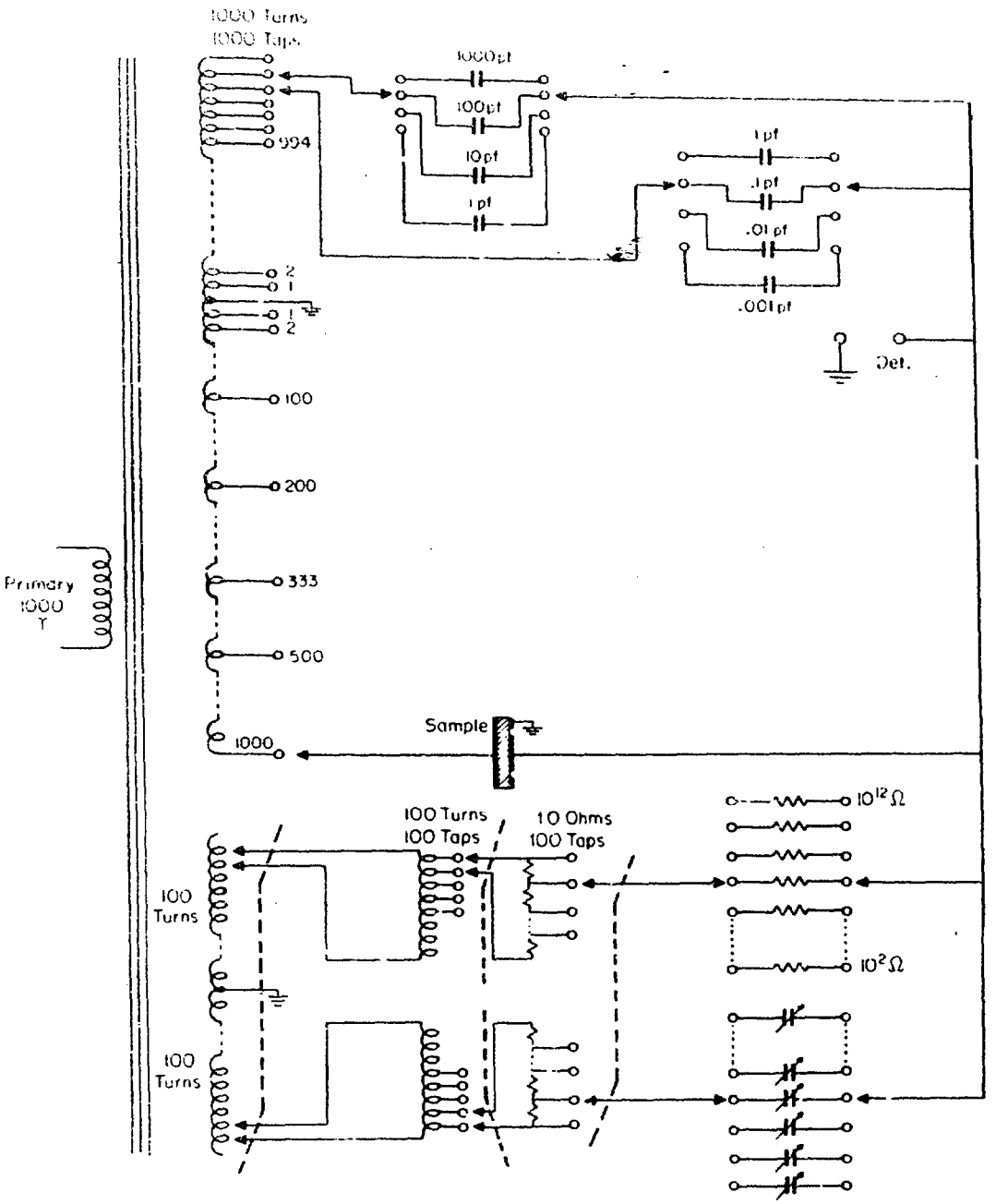

Fig. 1. Schematic of precision low-frequency bridge.

standard capacitors and 1000-turn transformer winding tapped at each turn. Six digit resolution in C is provided by using 100 turns of the transformer plus a 100-turn divider transformer plus a resistance potentiometer. These controls are duplicated with a symmetrical construction in the sample side of the bridge; here capacitors are adjusted to balance out the capacitance of the opposite conductivity network. Assuming that the transformer and C networks are ideal, successive balances made using phase-sensitive detectors and a series of samples with increasing loss should lead to a properly compensated G network. In Fig. 2, the

Fig. 2. Photographs of bridge switch.

construction of the 1000 point, 2-circuit capacitance switch is shown in present state. Contact fingers not shown will mount on the rotating cage and will contact pins in the phenolic drum. The holes for these pins are shown in a spiral pattern, 10 turns, 100 points per revolution.

Extension for a Two-Terminal Bridge

A basic problem exists in using our two-terminal wide-range bridge[4] for both hot and cold temperatures. For high temperatures the coaxial line connecting the sample to the bridge should go upward from the bridge to avoid heat transfer by convection to the bridge; for cold temperature the sample should be below the bridge. If separate sample holders are used for the two temperature regions, the sample must be transferred with risk of moisture contamination and two separate calibrations of sample holder capacitance are required. To avoid this problem, we have constructed an extension with a swivel joint in a horizontal line. As shown in Fig. 3, ordinary copper tube fittings, 2-1/2 inch size, were used for the outer conductor.

(a)

(b)

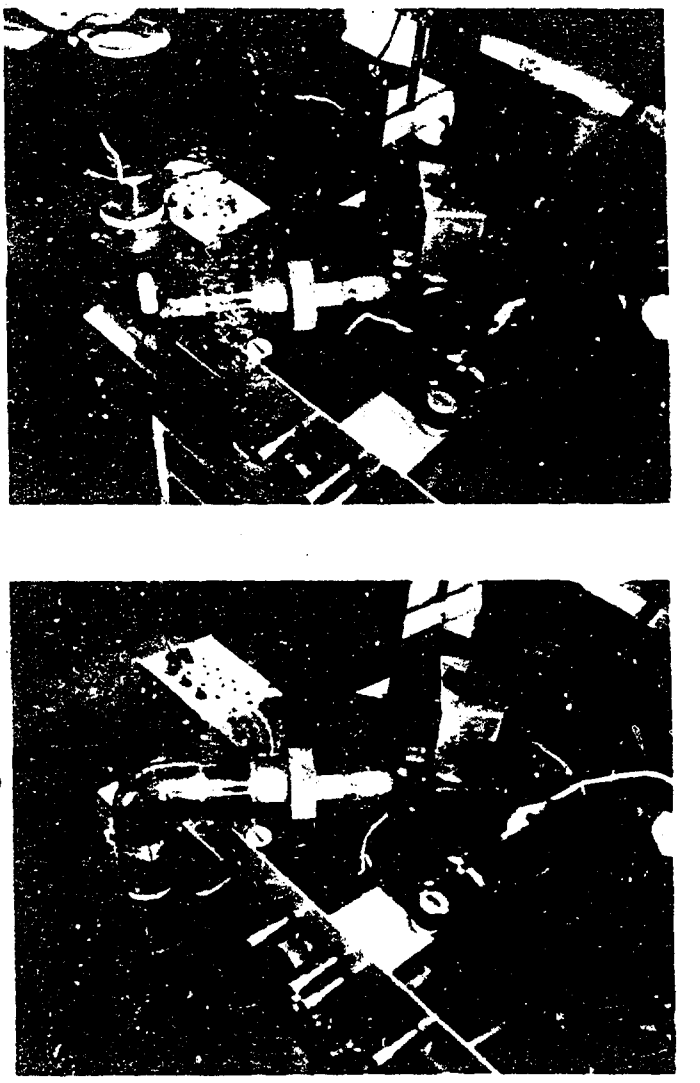

Fig. 3. Photographs of bridge extension: (a) for above ambient; (b) for below ambient.

The inner conductor size is 7/8 inch. These large conductors, combined with close proximity of switch and sample, result in nominal line loss correction of 0.0002 in tan δ at 18 MHz.

Resonant Cavity for 100 MHz

As indicated in a previous report,[5] a high-temperature measuring system at 100 MHz would be a desirable addition in the temperature-frequency plot of this laboratory's capabilities. A doubly-reentrant cavity (Fig. 4a) offers the possibility of reasonably accurate loss measurements to 2000°C. Direct measurement of absolute value of κ' might not be accurate (because of expansion effects in the cavity), but comparisons between materials should be satisfactory. The equivalent lumped circuit of the cavity is visualized by cutting the outer conductor on the center plane. The shorted coaxial line sections at each end are less than λ/4 long; at one frequency their equivalent is a lumped inductor (Fig. 4d). The center capacitor is divided into two sections by the center plane; each capacitor has the value 2C. Resonance obviously occurs when $2\omega^2LC = 1$ in the equivalent series circuit when the outer conductor is reconnected. Calculations of theoretical losses for an empty cavity show the losses separated into 4 parts:

1. Resistance of outer conductor of coaxial line.
2. Resistance of inner conductor of coaxial line.
3. Resistance of shorting plane at end of line.
4. Resistance of electrodes.

In Table 1 are tabulated the results of calculations for 3 cavities, all copper at 25°C, inner conductor and electrode face of Pt at 25°C, and the same at 1600°C. The measured value of Q for the copper cavity includes the contact losses of the spring fingers joint, coupling losses to generator and detector, and dielectric loss in the heat-shielded material; the 25°C, 100-MHz value is 4350. Figure 5 shows the equipment used for determining Q by the frequency variation method.

Table 1. Losses in reentrant cavity at 100 MHz, C_s = 33.9 pf.

Conductors	R1	R2	R3	R4	Q
Copper, 25°C	0.22	0.92	2.61	0.10	6100
Part Cu, part Pt, 25°C	0.22	2.27	2.61	0.51	4175
" " 1600°C	0.22	6.00	2.61	1.34	2305
Copper,* 25°C	0.43	1.79	3.20	0.26	6400
* At 150 MHz C_s = 14.6 pf.					

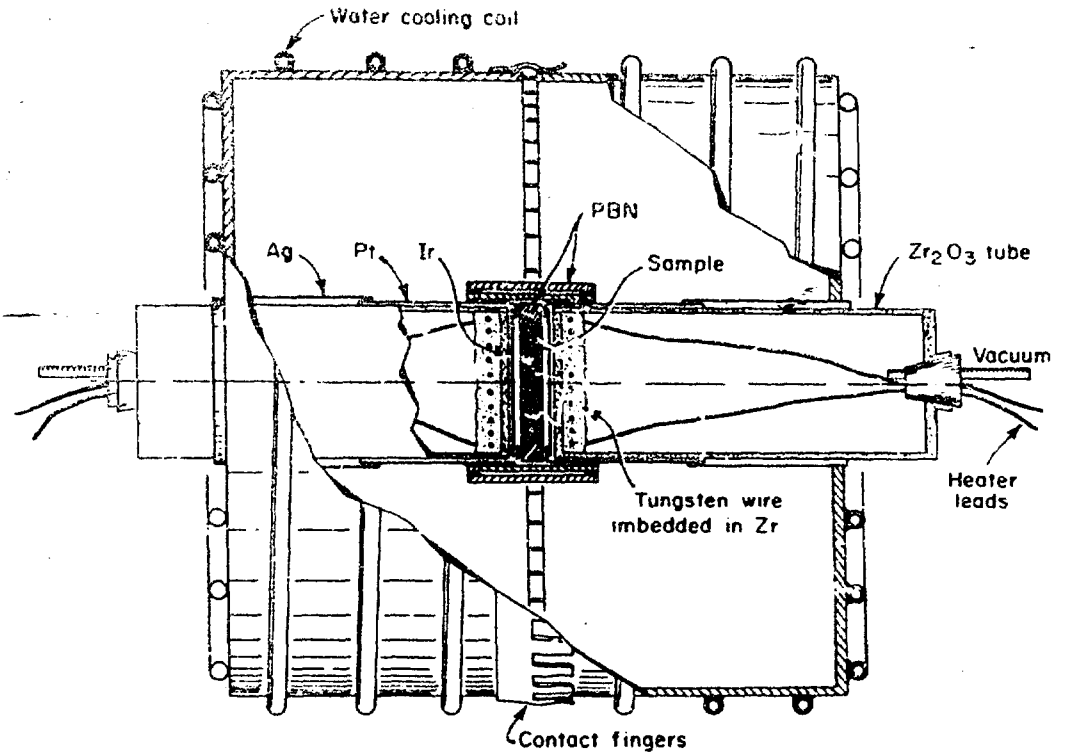

(a)

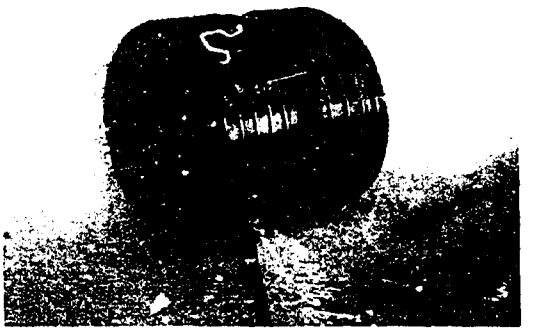

(b)

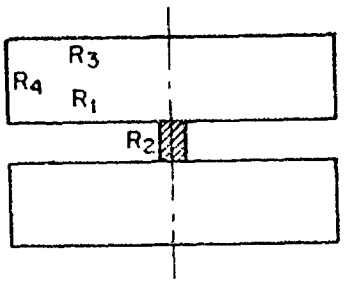

(c)

=

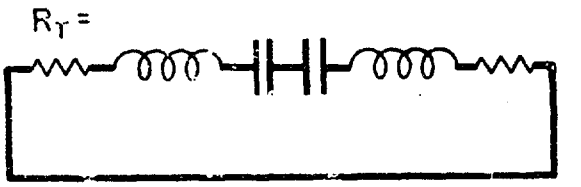

(d)

Fig. 4. Reentrant cavity; (a) cross section; (b) photograph; (c) symmetry plane; (d) equivalent circuit of reentrant cavity.

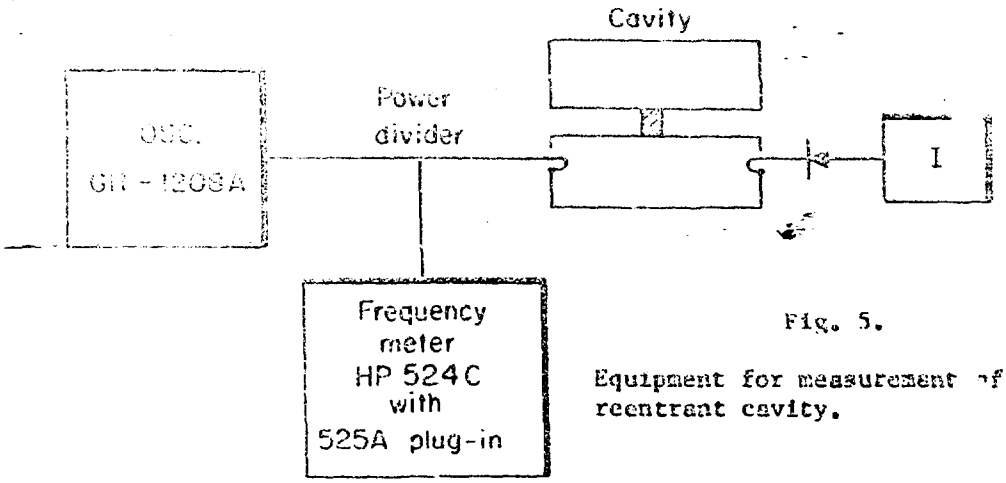

Fig. 5.

Equipment for measurement of Q of reentrant cavity.

Resonant-Cavity Method for Soft Materials

Our usual procedure for measuring materials above 1000°C has been to form a dielectric-filled cavity of the sample by wrapping it with Pt or Pt-Rh foil and

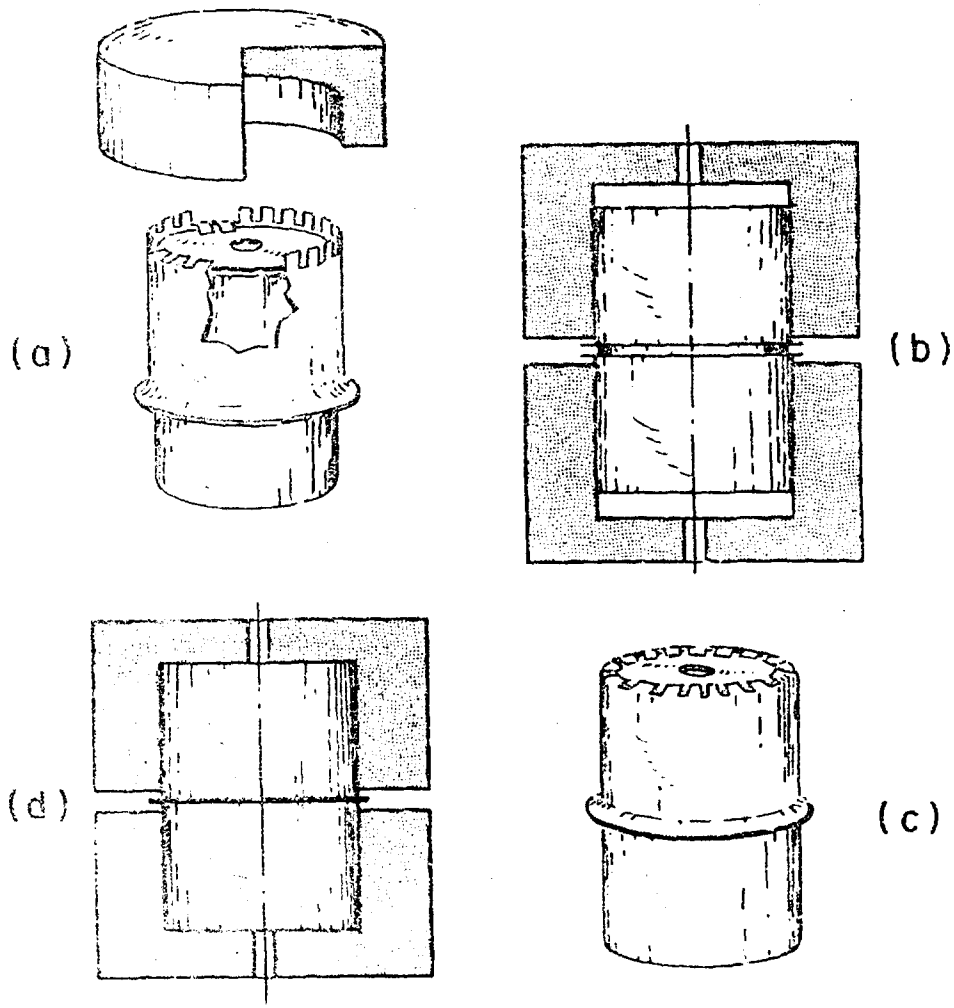

Fig. 6. High-temperature pressure welding of resonant cavity; (a) foil formed on mandrel, two are made. Faces are welded by hot-pressing; (b) welding of flanges by hot-pressing with sample inside; (c) finished dielectric-filled cavity; (d) cavity in graphite container as used during measurements.

welding the foil by hot-pressing against the sample faces. An alternate method is to make two flanged cups as shown in Fig. 6 using graphite plunger and die. With the sample in the cups, the rims are hot-pressed together. As usual, graphite cups surround the sample during measurement.

90-GHz Equipment

This bridge equipment, as originally built, was intended for use with relatively thin samples (<1 cm) and small diameter (5/8 inch), with an absorbing tube surrounding the sample. Measurements on fused silica and pyrolytic graphite have not yielded measurable loss values. Longer samples showed attenuation which varied depending on the absorber; this indicates the beams of energy are not narrow enough for long samples. Metallic tubes were substituted but have not been fully evaluated to find minimum satisfactory diameter and length combinations.

PROGRAMMING

Computation of κ', κ'' in Standing-Wave Measurements

The computation procedure for covered samples less than 1.4 radians long and mounted over a quarter wavelength in coaxial line has been previously given.[6] The program has been developed for any length of sample in hollow waveguide with TE mode. The same program may be used for a sample without cover (by setting the constants K1 and K2 equal to zero) and with coaxial line [by setting $(\lambda/\lambda_c)^2$ equal to zero]. The input data consist of node width with sample-in corrected for loss in air-filled section of line (DS), the node position with sample-in (SN) and the node position with sample out (AN). The value of $2\pi X_o/\lambda$ in the program is written

$$2\pi[XE - AN + SN(I)]/LW.$$

There are three common ways of taking the sample-out node position:

(1) Sample and cover are both removed, so empty holder is used. Then XE = -(D2 + D3), where D2 and D3 are the thickness of cover and sample, respectively.

(2) Sample is removed, cover is left in same position. Then XE is the calculated value of X_o with cover and empty sample space:

$$XE = \frac{\lambda}{2\pi} \tan^{-1}\left[\frac{K1 - \tan(2\pi D3/\lambda)}{1 + K2 \tan(2\pi D3/\lambda)}\right].$$

(3) Sample holder (in which the top of the cover is located a distance d_h from the top of the holder) is removed and replaced by a shorting plane. Then $XE = d_h$.

When the sample over quarter wavelength holder is used as in the previous program,

$$XE = \frac{\lambda}{2\pi} \tan^{-1}\left[\frac{\cot(2\pi D3/\lambda) + K1}{1 - K2 \cot(2\pi D3/\lambda)}\right].$$

In the programs and in the above expressions:

λ = LW = wavelength in air-filled section of waveguide [hollow (TE modes) or coax (TE mode)],

$$FC = \left(\frac{\lambda}{\lambda_C}\right)^2,$$

$$W = 1 + FC$$

$$K1 = -\frac{1}{(\kappa_2' W - FC)^{1/2}} \tan\left[\frac{2\pi D2}{\lambda} (\kappa_2' W - FC)^{1/2}\right],$$

$$K2 = -(\kappa_2' W - FC)^{1/2} \tan\left[\frac{2\pi D2}{\lambda}(\kappa_2' W - FC)^{1/2}\right],$$

$$K3 = \frac{\lambda}{2\pi D3}.$$

Losses in the cover are neglected but the program can be readily changed to include these losses if necessary. The wall losses in sample-filled section are included in the results as computed. They are readily subtracted at the end of the computation.[6)]

REFERENCES

1. A. von Hippel and co-workers, "The Dielectric Relaxation Spectra of Water, Ice, and Aqueous Solutions and Their Interpretation. VI. New Measurements on Relaxation and Conduction of 'Pure' Ice I_h Single Crystals and Their Critical Evaluation," Tech. Rep. 6 (Contract N00014-67A-0204-0003), Lab. Ins. Res., Mass. Inst. Tech., May 1969, p. 15.

2. Dielectric Materials and Applications, A. von Hippel, Ed., The Technology Press at MIT and John Wiley & Sons, New York, 1954, p. 58.

3. W. P. Harris, "Operator's Procedure Manual for Harris Ultra Low Frequency Impedance Bridge," NBS Report 9627, U.S. Department of Commerce, National Bureau of Standards, October 1967.

4. R. E. Charles, K. V. Rao, and W. B. Westphal, "A Capacitance Bridge Assembly for Dielectric Measurements from 1 Hz to 40 MHz," Tech. Rep. 201, Lab. Ins. Res., Mass. Inst. Tech., October 1966.

5. W. B. Westphal and J. Iglesias, "Dielectric Measurements on High-Temperature Materials," Tech. Rep. AFML-TR-70-138, Lab. Ins. Res., Mass. Inst. Tech., July 1970.

6. Reference 5, pp. 6-9, 14,15.

7. Reference 2, p. 86.

PROGRAM I

THIN COVERED SAMPLE (<1.4 radians) OVER QUARTER WAVELENGTH

IN HOLLOW GUIDE


```
0001          INTEGER*4 I,J,K,N,NX
0002          REAL*8 K1,K2,K3,Y,XE,AN,SN,LW,DX,DS,DA,X,A,B,A2,B2,Z14RE,Z14IM,
             2BOLD,Z14IOD,Z14ROD,ERROR1,EROLD,AOLD,AIM,RE,TAM,Z11RE,Z11IM,WE,
            3COSINE,FC,W,ZM,Y1,TAHA,TANB,PII,PII2,ZRO,ONE,STEP(4)/1.D-2,1.D-3,
             41.D-4,1.D-5/,NDB,F(2)/1.D0,-1.D0/
0003          COMPLEX*16 Z1,Z2,Z3,Z4,Z5,Z6,Z7,Z8,Z9,Z10,Z11,Z12,Z13,Z14R,Z14I,
             2Z14,Z12NEW,Z12RE,Z12IM,Z12SQ,G,H,Z15,Z2A,ZONE,ZOONE
0004          REAL*8 SILLY(2),FAKE(2),FUN(2)
0005          EQUIVALENCE (SILLY(1),Z11),(FAKE(1),Z15),(FUN(1),Z12SQ)
0006          DIMENSION DS(10),SN(10),DATE(18)
0007          NAMELIST/IN/DS,SN,NX/CONST/DA,AN,XE,K1,K2,K3,FC,W,LW/OUT/K1,K2,
             2K3,LW/OUT2/Z1,Z2,Z4,Z9,A,B
0008      200 FORMAT(1X,18A4)
0009       77 READ(5,200,END=88) DATE
0010      201 FORMAT(1H1,20X,18A4)
0011          WRITE(6,201) DATE
0012          READ(5,IN)
0013          READ(5,CONST)
0014          WRITE(6,IN)
0015          WRITE(6,CONST)
0016      100 FORMAT(1H0,5X,2HNS,10X,2HDS,11X,2HK1,11X,2HK2,12X,3HTAN,20X,3HZ11,
             231X,3HZ14//)
0017          WRITE(6,100)
0018          ZONE=(1.D0,0.D0)
0019          ZOONE=(0.D0,1.D0)
0020          PII=31416.D-4
0021          PII2=62832.D-4
0022          ZRO=0.D0
0023          ONE=1.D0
0024          DO 10 I=1,NX
0025          IF(SN(I).EQ.AN) GO TO 10
0026          Y=PII2*(XE-AN+SN(I))/LW
0027          DX=DS(I)-DA
0028          IF(DX.LE.ZRO) GO TO 10
0029          COSINE=DCOS(PII*DX/LW)**2
0030          X=DSIN(PII*DX/LW)/DSQRT(2.D0-COSINE)
0031          Y1=DTAN(Y)
0032          Z1=ZOONE*Y1
0033          Z2A=ZONE*X
0034          Z2=Z2A-Z1
0035          Z3=ZONE-Z2A*Z1
0036          Z4=Z2/Z3
0037          Z5=ZOONE*K1
0038          Z6=Z4+Z5
0039          Z7=ZOONE*K2
0040          Z8=ZONE+Z4*Z7
0041          Z9=Z8/Z6
0042          Z10=ZOONE/K3
0043          Z11=Z10*Z9
0044          Z11RE=SILLY(1)
0045          Z11IM=SILLY(2)
0046          Z12SQ=CDSQRT(Z11+(1.D0/3.D0)*Z11**2)
0047          A=FUN(1)
0048          B=FUN(2)
0049      160 TAHA=DTANH(A)
0050          TANB=DTAN(B)
0051          A2=TAHA*(ONE+TANB**2)/(ONE+TAHA**2*TANB**2)
0052          B2=TANB*(ONE-TAHA**2)/(ONE+TAHA**2*TANB**2)
0053          Z14RE=A*A2-B*B2
0054          Z14IM=A*B2+B*A2
0055          ERROR1=DSQRT((Z14RE-Z11RE)**2+(Z14IM-Z11IM)**2)
0056          DO 400 K=1,4
0057          TAHA=DTANH(A)
0058          DO 600 J=1,2
0059          WE=ONE+STEP(K)*F(J)
0060      401 BOLD=B
0061          Z14IOD=Z14IM
0062          Z14ROD=Z14RE
0063          EROLD=ERROR1
```

```
      B=B*WE
      TANB=DTAN(B)
      A2=TAHA*(ONE+TANB**2)/(ONE+TAHA**2*TANB**2)
      B2=TANB*(ONE-TAHA**2)/(ONE+TAHA**2*TANB**2)
      Z14RE=A*A2-B*B2
      Z14IM=A*B2+B*A2
      ERROR1=DSQRT((Z14RE-Z11RE)**2+(Z14IM-Z11IM)**2)
      IF(ERROR1.LE.EROLD) GO TO 401
      Z14IM=Z14IOD
      Z14RE=Z14ROD
      B=BOLD
      ERROR1=EROLD
  600 CONTINUE
      TANB=DTAN(B)
      DO 700 J=1,2
      WE=ONE+STEP(K)*F(J)
  402 AOLD=A
      Z14ROD=Z14RE
      Z14IOD=Z14IM
      EROLD=ERROR1
      A=A*WE
      TAHA=DTANH(A)
      A2=TAHA*(ONE+TANB**2)/(ONE+TAHA**2*TANB**2)
      B2=TANB*(ONE-TAHA**2)/(ONE+TAHA**2*TANB**2)
      Z14RE=A*A2-B*B2
      Z14IM=A*B2+B*A2
      ERROR1=DSQRT((Z14RE-Z11RE)**2+(Z14IM-Z11IM)**2)
      IF(ERROR1.LE.EROLD) GO TO 402
      Z14RE=Z14ROD
      Z14IM=Z14IOD
      A=AOLD
      ERROR1=EROLD
  700 CONTINUE
      IF(ERROR1.LE.1.D-6) GO TO 450
  400 CONTINUE
  450 Z12RE=ZONE*A
      Z12IM=ZOCNE*B
      Z12NEW=(Z12RE+Z12IM)**2
      Z13=-Z12NEW*K3**2
      G=ZONE*FC
      H=ZONE*W
      Z15=(G+Z13)/H
      Z14R=ZONE*Z14RE
      Z14I=ZONE*Z14IM
      Z14=Z14R+Z14I
      RE=FAKE(1)
      AIM=-FAKE(2)
      TAN=AIM/RE
  300 FORMAT(2X,F8.4,5X,F7.4,5X,F9.3,5X,F9.3,5X,F8.4,5X,E13.6,3X,E13.6,
     25X,E13.6,3X,E13.6)
      WRITE(6,300) SN(I),DS(I),RE,AIM,TAN,Z11,Z14
      WRITE(6,OUT2)
   10 CONTINUE
      GO TO 77
   88 CALL EXIT
      END
```

TYPICAL PRINT-OUT

NS	DS	K1	K2	TAN
0.6250	0.0700	30.705	4.965	0.1617
0.6310	0.0710	29.533	4.894	0.1657

Z11		Z14	
-0.271708D-01	0.450694D-02	-0.271707D-01	0.450693D-02
-0.261068D-01	0.443913D-02	-0.261069D-01	0.443915D-02

```
&OUT
K1=-0.131899999999999     ,K2= -1.198499999999999     ,K3=  46.99499999999999
&END
          ,LW=  4.499999999999999
```

NOT REPRODUCIBLE

PROGRAM II

COVERED SAMPLE OF ANY LENGTH (N HALF WAVELENGTHS)

AGAINST SHORT IN HOLLOW GUIDE

```
FORTRAN IV G LEVEL  18                    MAIN                    DATE = 71112          17/37/44

0001              INTEGER*4 I,J,K,N,NX
0002              REAL*8 K1,K2,K3,Y,XE,AN,SN,LW,DX,DS,DA,X,A,B,A2,B2,Z14RE,Z14IM,
                 2BOLD,Z14IOD,Z14ROD,ERROR1,EROLD,AOLD,AIM,RE,TAM,Z11RE,Z11IM,WE,
                 3COSINE,FC,W,ZM,Y1,TAHA,TANB,PII,PII2,ZRO,ONE,STEP(22)/0.1D0,5.D 2,
                 42.D-2,1.D-2,5.D-3,2.D-3,1.D-3,5.D-4,2.D-4,1.D-4,5.D-5,2.D-5,1.D-5,
                 55.D-6,2.D-6,1.D-6,1.D-7,1.D-8,1.D-9,1.D-10,1.D-11,1.D-12/,NDB,
                 6F(2)/1.D0,-1.D0/,SOLD
0003              COMPLEX*16 Z1,Z2,Z3,Z4,Z5,Z6,Z7,Z8,Z9,Z10,Z11,Z12,Z13,Z14R,Z14I,
                 2Z14,Z12NEW,Z12RE,Z12IM,Z12SQ,G,H,Z15,Z2A,ZONE,ZOONE
0004              REAL*8 SILLY(2),FAKE(2)
0005              EQUIVALENCE (SILLY(1),Z11),( FAKE(1),Z15)
0006              DIMENSION DS(56),SN(56),N(56),DATE(18)
0007              NAMELIST/IN/DS,SN,N,NX/CONST/DA,AN,XE,K1,K2,K3,FC,W,LW/OUT/A,
                 2B,Z14RE,Z14IM,K,J,ERROR1,KOUNT,WE
0008          200 FORMAT(1X,18A4)
0009           77 READ(5,200,END=88) DATE
0010          201 FORMAT(1H1,20X,18A4)
0011              WRITE(6,201) DATE
0012              READ(5,IN)
0013              READ(5,CONST)
0014              WRITE(6,IN)
0015              WRITE(6,CONST)
0016          100 FORMAT(1H0,5X,2HNS,6X,2HDS,6X,1HN,6X,2HK1,9X,2HK2,9X,3HTAN,
                 218X,3HZ11,28X,3HZ14//)
0017              WRITE(6,100)
0018              ZONE=(1.D0,0.D0)
0019              ZOONE=(0.D0,1.D0)
0020              PII=31416.D-4
0021              PII2=62832.D-4
0022              ZRO=0.D0
0023              ONE=1.D0
0024              DO 10 I=1,NX
0025              IF(SN(I).EQ.AN) GO TO 10
0026              Y=PII2*(XE-AN+SN(I))/LW
0027              DX=DS(I)-DA
0028              IF(DX.LE.ZRO) GO TO 10
0029              COSINE=DCOS(PII*DX/LW)**2
0030              X=DSIN(PII*DX/LW)/DSQRT(2.D0-COSINE)
0031              Y1=DTAN(Y)
0032              Z1=ZOONE*Y1
0033              Z2A=ZONE*X
0034              Z2=Z2A-Z1
0035              Z3=ZONE-Z2A*Z1
0036              Z4=Z2/Z3
0037              Z5=ZOONE*K1
0038              Z6=Z4+Z5
0039              Z7=ZOONE*K2
0040              Z8=ZONE+Z4*Z7
0041              Z9=Z6/Z8
0042              Z10=ZOONE*(-K3)
0043              Z11=Z10*Z9
0044              Z11RE=SILLY(1)
0045              Z11IM=SILLY(2)
0046              ZM=DSQRT(Z11RE**2+Z11IM**2)
0047              IF(N(I) .EQ. 1) GO TO 141
0048              IF(N(I) .GE. 2) GO TO 142
0049          141 IF(ZM.LE.ONE.AND.Z11RE.GE.ZRO) GO TO 150
0050              IF(ZM.LE.ONE.AND.Z11RE.LT.ZRO) GO TO 151
0051              IF(ZM.GT.ONE.AND.Z11RE.GE.ZRO) GO TO 152
0052              IF(ZM.GT.ONE.AND.Z11RE.LT.ZRO) GO TO 153
0053          142 IF(ZM.LE.ONE.AND.Z11RE.GE.ZRO) GO TO 170
0054              IF(ZM.LE.ONE.AND.Z11RE.LT.ZRO) GO TO 171
0055              IF(ZM.GT.ONE.AND.Z11RE.GE.ZRO) GO TO 172
0056              IF(ZM.GT.ONE.AND.Z11RE.LT.ZRO) GO TO 173
0057          150 B=ONE
0058              A=42.D-1*DX/LW
0059              GO TO 160
0060          151 B=22.D-1
0061              A=2.D0*DX/LW
```

```
      GO TO 160
  152 B=ONE
      A=6.D0*DX/LW
      GO TO 160
  153 B=18.D-1
      A=DX/LW
      GO TO 160
  170 ND8=N(I)
      B=(ND8-ONE)*PII+7854.D-4
      A=4.D0*DX/LW
      GO TO 160
  171 ND8=N(I)
      B=ND8*PII-7854.D-4
      A=4.D0*DX/LW
      GO TO 160
  172 ND8=N(I)
      B=(2.D0*ND8-1.D0)*15708.D-4-1.D-1/ND8
      A=DX/LW
      GO TO 160
  173 ND8=N(I)
      B=(2.D0*ND8-1.D0)*15708.D-4+1.D-1/ND8
      A=DX/LW
  160 TAHA=DTANH(A)
      TANB=DTAN(B)
      A2=TAHA*(ONE+TANB**2)/(ONE+TAHA**2*TANB**2)
      B2=TANB*(ONE-TAHA**2)/(ONE+TAHA**2*TANB**2)
      Z14RE=(A*A2+B*B2)/(A**2+B**2)
      Z14IM=(A*B2-B*A2)/(A**2+B**2)
      ERROR1=DSQRT((Z14RE-Z11RE)**2+(Z14IM-Z11IM)**2)
      DO 400 K=1,22
      SOLD=STEP(K)
      TAHA=DTANH(A)
      DO 600 J=1,2
  420 WE=ONE+STEP(K)*F(J)
      KOUNT=0
  401 KOUNT=KOUNT+1
      IF(KOUNT.GT.10) GO TO 411
      GO TO 425
  411 STEP(K)=STEP(K)*10.D0
      GO TO 420
  425 BOLD=B
      Z14IOD=Z14IM
      Z14ROD=Z14RE
      EROLD=ERROR1
      B=B*WE
      TANB=DTAN(B)
      A2=TAHA*(ONE+TANB**2)/(ONE+TAHA**2*TANB**2)
      B2=TANB*(ONE-TAHA**2)/(ONE+TAHA**2*TANB**2)
      Z14RE=(A*A2+B*B2)/(A**2+B**2)
      Z14IM=(A*B2-B*A2)/(A**2+B**2)
      ERROR1=DSQRT((Z14RE-Z11RE)**2+(Z14IM-Z11IM)**2)
      IF(ERROR1.LE.EROLD) GO TO 401
      Z14IM=Z14IOD
      Z14RE=Z14ROD
      B=BOLD
      ERROR1=EROLD
      STEP(K)=SOLD
  600 CONTINUE
      TANB=DTAN(B)
      DO 700 J=1,2
  421 WE=ONE+STEP(K)*F(J)
      KOUNT=0
  402 KOUNT=KOUNT+1
      IF(KOUNT.GT.10) GO TO 412
      GO TO 428
  412 STEP(K)=STEP(K)*10.D0
      GO TO 421
  428 AOLD=A
      Z14ROD=Z14RE
      Z14IOD=Z14IM
      EROLD=ERROR1
      A=A*WE
      TAHA=DTANH(A)
      A2=TAHA*(ONE+TANB**2)/(ONE+TAHA**2*TANB**2)
      B2=TANB*(ONE-TAHA**2)/(ONE+TAHA**2*TANB**2)
      Z14RE=(A*A2+B*B2)/(A**2+B**2)
      Z14IM=(A*B2-B*A2)/(A**2+B**2)
      ERROR1=DSQRT((Z14RE-Z11RE)**2+(Z14IM-Z11IM)**2)
```

PROGRAM II (Cont.)

```
0140          IF(ERROR1.LE.EROLD) GO TO 402
0141          Z14RE=Z14ROD
0142          Z14IM=Z14IOD
0143          A=AOLD
0144          ERROR1=EROLD
0145          STEP(K)=SOLD
0146      700 CONTINUE
0147          IF(ERROR1.LE.1.D-6) GO TO 450
0148      400 CONTINUE
0149      450 Z12RE=ZONE*A
0150          Z12IM=ZOONE*B
0151          Z12NEW=(Z12RE+Z12IM)**2
0152          Z13=-Z12NEW*K3**2
0153          G=ZONE*FC
0154          H=ZONE*W
0155          Z15=(G+Z13)/H
0156          Z14R=ZONE*Z14RE
0157          Z14I=ZOONE*Z14IM
0158          Z14=Z14R+Z14I
0159          RE=FAKE(1)
0160          AIM=-FAKE(2)
0161          TAM=AIM/RE
0162      300 FORMAT(2X,F7.4,3X,F7.4,3X,I2,3X,F7.4,3X,F9.6,3X,F9.6,3X,E13.6,
             22X,E13.6,3X,E13.6,2X,E13.6)
0163          WRITE(6,300) SN(I),DS(I),N(I),RE,AIM,TAM,Z11,Z14
0164       10 CONTINUE
0165          GO TO 77
0166       88 CALL EXIT
0167          END
```

TYPICAL PRINT-OUT

NS	DS	N	K1	K2	TAN
7.0000	0.0100	1	1.1471	0.002666	0.002324
7.0000	1.0000	1	1.1138	0.453739	0.407376
6.5000	0.0100	1	1.7884	0.004175	0.002335
6.5000	1.0000	1	1.5719	0.650037	0.413534
6.0000	0.0100	1	3.2139	0.011904	0.003704
6.0000	1.0000	1	2.0000	1.525029	0.762520
7.5000	0.0100	2	6.9674	0.001903	0.000273
7.5000	1.0000	2	6.9787	0.325143	0.046591
7.0000	0.0100	2	7.3665	0.002279	0.000309
7.0000	1.0000	2	7.2929	0.375678	0.051513
6.5000	0.0100	2	8.0271	0.005175	0.000645
6.5000	1.0000	2	7.6436	0.681794	0.089198
6.0000	0.0100	2	11.0249	0.039429	0.003576
6.0000	1.0000	2	7.4015	1.728636	0.233552

Z11		Z14	
0.241432D 01	-0.209141D-01	0.241432D 01	-0.209141D-01
0.845902D 00	-0.938693D 00	0.845902D 00	-0.938693D 00
-0.154392D 01	-0.205383D-01	-0.154392D 01	-0.205383D-01
0.335229D-02	-0.935078D 00	0.335220D-02	-0.935078D 00
0.103465D 00	-0.277013D-02	-0.103465D 00	-0.277013D-02
0.715289D-01	-0.393698D 00	0.715292D-01	-0.393698D 00
0.957215D 00	-0.278362D-02	0.957216D 00	-0.278363D-02
0.780797D 00	-0.394979D 00	0.780797D 00	-0.394979D 00
0.241432D 01	-0.209141D-01	0.241432D 01	-0.209141D-01
0.845902D 00	-0.938693D 00	0.845902D 00	-0.938694D 00
-0.154392D 01	-0.205383D-01	-0.154392D 01	-0.205383D-01
0.335229D-02	-0.935078D 00	0.335137D-02	-0.935078D 00
-0.103465D 00	-0.277013D-02	-0.103466D 00	-0.277014D-02
0.715289D-01	-0.393698D 00	0.715288D-01	-0.393698D 00

INDEX TO DIELECTRIC DATA

	Page
I. INORGANIC COMPOUNDS	
Aluminum oxide, single crystal, Union Carbide	17
" " multicrystalline, G.E. A-923	17
A-1004	17
Boron nitride, hot-pressed, Battelle Memorial Institute	18
Magnesium aluminate (spinel), single crystal, Union Carbide	18
Silica slipcast, Dynasil	18
Silica fiber, Philco Ford	18,19
Silica fiber phosphate, Whittaker Corp.	20
Silicon nitride, Admiralty Materials Lab.	20
II. MISCELLANEOUS INORGANICS AND MIXTURES	
Concrete pavement, California Highway Department	21
Asphalt pavement, " " "	21
III. ORGANIC COMPOUNDS (Listed according to source)	
Budd, copper-clad laminate	22,23
Carborundum, EKONOL (polyester resin)	23
Dodge Industries, FLUORGLAS E 650/2-1200	24
E.I. du Pont de Nemours, Nonex honeycombs	24
IV. LIQUIDS (Listed according to source)	
Hercules Inc., VUL-CUP, a,a^1-bis(t-butyl peroxy) diidopropybenzene	25
" DI-CUP, dicumyl peroxide	25
Pennwalt Corp., Lucidol Div., Lucidol, t-butyl perbenzoate	25
" " Lupersol 130, 2,5-dimethyl-2,5-di(t-butylperoxy) hexyne-3	25
U.S. Peroxygen Div., Argus Chemical Corp., USP 333	26
Wallace & Tiernan Inc., Lupersol 101, 2,5-dimethyl-2,5-di(t-butylperoxy)hexane	26

I. INORGANIC COMPOUNDS

Aluminum oxide, single crystal — Union Carbide, Electronics Div.

Sapphire Al_2O_3

Density at 25°C = 3.9840 g/cm^3

Freq. 3.45 - 3.33 GHz

E ⊥ C

T°C	κ	tan δ
25	9.39	<.0001
80	9.41	<.0001
240	9.49	<.0001
377	9.62	<.0001
526	9.83	<.0001
617	9.95	<.0001
713	10.08	.00015

Aluminum oxide, multicrystalline

A-923 (97% Al_2O_3)

Density 3.740 g/cm^3

Freq. 3.74 - 3.37 GHz

T°C	κ	tan δ
25	9.31	.00039
99	9.41	.00042
184	9.58	.00053
281	9.72	.00070
356	9.84	.00090
430	9.96	.00112
562	10.17	.00160
705	10.42	.00215
800	10.63	.00265
903	10.86	.0033
973	10.98	.0040
1025	11.17	.0045
1050	11.22	.0050
1109	11.38	.0060
1132	11.41	.010

General Electric Company

A-1004 (94% Al_2O_3)

Density 3.649 g/cm^3

Freq. 3.80 - 3.61 GHz

T°C	κ	tan δ
25	9.02	.00076
100	9.11	.00078
200	9.26	.00081
300	9.40	.00093
400	9.55	.00109
500	9.69	.00128
600	9.84	.00177
650	9.92	.00335
700	10.00	.0093

Boron nitride

(hot-pressed, after vacuum treatment)

Density in g/cm^3

Battelle Memorial Institute

8.52 GHz, 25°C

Sample	Density	κ	tan δ
115H7	—	4.37	.00030
118H7	2.132	4.87	.00025

Magnesium aluminate (spinel) $MgOAl_2O_3$

Single crystal

Density at 25°C = 3.57389 g/cm^3

Union Carbide, Electronics Div.

Freq. 4.23 - 4.07 GHz

T°C	κ ± 02	tan δ
25	8.28	.0001
150	8.42	.0002
231	8.54	.0002
297	8.64	.0003
421	8.85	.0010
455	8.91	.0025

Silica, slip-cast

Dynasil Corp. of America

8.6 GHz, 25°C

Sample	Density (g/cm^3)	κ	tan δ
DSCX-3	1.970	3.395	.00058
DSCX-8E	2.038	3.513	.00054

Silica fiber composites

Philco-Ford Corp., Aeronutronic Div.

Sample 1-VH-O-M-1, 25°C		(Hz)	10^5	10^6	10^7	$7.5x10^7$	$1.8x10^8$
As received,		κ	2.779	2.777	2.777	2.775	2.772*
density 1.536 g/cm^3	10^4	tan δ	4.6	8.3	6.4	13.4	17*
After 18 hrs.		κ			2.77	2.77	2.77*
vacuum oven 80°C	10^4	tan δ			4.6	9.1	11.5*

* Extrapolated values.

Silica fiber composites (cont.) Philco-Ford Corp., Aeronutronic Div.

Sample 1-XB-O-M

Density 1.653 g/cm^3

	T°C	8.52 GHz κ	tan δ
As received, Face 1 up	25	2.919	.0062
Face 2 up	25	2.956	.0064
After vacuum oven 80°C, 10 days			
Face 2 up	25	2.938	.00162
Face 1 up	25	2.895	.00169
	115	2.89	.0012
	246	2.89	.0006
	357	2.90	.0005
	438	↓	.0006
	535		.0008
	608		.0010
	710		.0014
	805		.0020
	908		.0026
	972		.0028
	1000	*	.0031*
	25	2.89	.00042

* Extrapolated values.

Silica fibers in aluminum phosphate matrix — Whittaker Corp.

ChemCeram

8.52 GHz

Sample	T°C	κ	tan δ	Density (c/cm³)
1, as received	25	2.73	.0051	1.547
2, as "	25	2.70	.0060	1.543
2, dried*	25	2.68	.0043	(wt. loss .049%)
2, room humidity	25	2.70	.0050	
	116	2.70	.0050	
	235	2.71	.0053	
	410	2.71	.0080	
	495	2.71	.0105	
	580	2.72	.0140	
	673	2.72	.0177	
	760	2.72	.0228	
	827	2.73	.0265	
	916	2.74	.0315	
	967	2.75	.038	
	25	2.71	.0047	

* 4 days at 120°C in vacuum oven.

Silicon nitride ceramic — Admiralty Materials Laboratory

At 8.52 GHz, density 2.449 g/cm³

T°C	κ	tan δ
25	5.54	.0036
170	5.54	.00375
323	5.54	.0040
446	5.55	.00365
586	5.55	.0030
674	5.56	.0050
714	5.57	.0054
864	5.58	.00615
912	5.59	.00630
991	5.63	.00665
509	5.55	.0034
348	5.54	.0040

II. MISCELLANEOUS INORGANICS AND MIXTURES

Concrete pavement

California Highway Department

Sample	Density	(MHz)	0.1	1	10	100
S1	Dry	κ	9.05	7.97	[illegible]	6.57
		tan δ	.0946	.0913	.0736	.0526
S1	Wet	κ	176.5	69.2	23.5	13.2
		tan δ	.822	1.088	.734	.485

Asphalt pavement

California Highway Department

Sample	Density	(Hz)	10^5	10^6	10^7	10^8
S	Dry	κ	4.51	4.34	4.21	4.14
		tan δ	.0280	.0221	.0181	.0198
S	Wet	κ	42.0	17.7	9.03	6.54
		tan δ	.875	.638	.444	.233
L	Dry	κ	4.79	4.73	4.70	4.61
		tan δ	.0187	.0158	.0123	.0121
L	Wet	κ	14.48	9.28	6.65	6.01
		tan δ	.368	.280	.190	.104

Copper-clad laminate PE1153 — The Budd Co., Polychem Division

E ⊥			10^2	10^3	10^4	10^5	10^6	10^7
3-terminal, liquid immersion, unclad *	25	κ			2.420			
		tan δ						
Declad †	25	κ			2.451			
		tan δ						
3-terminal, clad	26	κ	2.650	2.465	2.438	2.432		
		tan δ	.0945	.0279	.00484	.00093		
	-195	κ	2.416	2.415	2.414	2.411		
		tan δ	.00030	.00033	.00036	.00022		
	-54	κ	2.433	2.421	2.417	2.413		
		tan δ	.00042	.00050	.00052	.00031		
2-terminal, clad, meas. 12-21-70	25	κ	2.495	2.475	2.471	2.469	2.468	2.468
		tan δ	.01816	.00307	.00083	.00050	.00055	.00035
3-terminal, clad, 2nd sample	25	κ	2.843	2.504	2.457	2.449		
		tan δ	.141	.0491	.00811	.00126		
	96	κ	2.486	2.398	2.389	2.384		
		tan δ	.0708	.01343	.00230	.00050		
	250	κ	2.257	2.240	2.232	2.222		
		tan δ	.0263	.00568	.00238	.00111		
	25	κ	2.759	2.510	2.459	2.451		
		tan δ	.0970	.0390	.00748	.00115		
2-terminal, clad	-54	κ	2.484	2.484	2.484	2.479	2.464	2.456
		tan δ	.00034	.00044	.00065	.00062	.00059	.00110
	-195	κ	2.490	2.487	2.485	2.484	2.482	2.470
		tan δ	.00029	.00038	.00053	.00028	.00049	.00091
	25	κ				2.462	-	2.458
		tan δ				.00050	-	.00033
	96	κ	2.474	2.464	2.461	2.460	2.458	2.455
		tan δ	.01193	.00226	.00084	.00059	.00052	.00068
	250	κ	2.333	2.319	2.312	2.309	2.298	2.295
		tan δ	.01013	.00340	.00177	.00147	.00097	.00070
	25	κ	2.422	2.415				
		tan δ	.00995	.00189				
E ∥								
2-terminal, unclad	25	κ	2.434	2.533	2.431	2.428	2.416	2.413
		tan δ	.0037	.00094	.00061	.00035	.00052	.0005

* Refers to sheet stock received without copper.

† Refers to a sample made by mechanically stripping the copper-clad sheet.

Copper-clad laminate PE1153 (cont.) The Budd Co., Polychem Division

Resonant-Cavity Measurements:

~ 8.5 GHz, sample constrained in parallel direction, allowed to expand with temperature against a force 30 lb/sq in the perpendicular direction. Unclad stock.

	E ⊥		E ∥		Thickness
T°C	κ	tan δ	κ	tan δ	cm
-194	2.466	.00063	2.420	.00095	1.911
-54	2.437	.00070	2.397	.00104	1.917
23	2.421	.00091	2.383	.00130	1.924
96	2.396	.00117	2.367	.00147	1.948
250	2.296	.0022	2.246	.00185	2.093

Standing-wave method, 25°C

E ∥ , one piece unclad 2.387 .00128

EKONOL (polyester resin) The Carborundum Company

Frequency, Hz	T°C	κ	tan δ
10^2	25	3.216	.00289
10^3	↓	3.210	.00316
10^4		3.185	.00336
10^5		3.168	.00348
10^6		3.156	.00325
10^7		3.148	.00220
10^8		3.140	.00215
8.5×10^9	↓	3.120	.00281
↓	99	3.11	.0030
	155	3.08	.0040
	207	3.07	.0061
	284	3.04	.0104
	350	3.03	.0230
	420	3.03	.0230
	217	2.99	.0067
	25	2.96	.0025

FLUORGLAS E 650/2-1200

TFE-fiberglas laminate

Dodge Indu[illegible]ies, Inc.

Freq., GHz	T°C	E ⊥ κ	E ⊥ tan δ	E ∥ κ	E ∥ tan δ
8.5	23	2.505	.0014	2.847	.0036
4	-195	2.533	.00082	2.896	.00172

Nonex honeycombs

At 8.52 GHz

E. I. du Pont de Nemours and Company

		a direction E ⊥ double-layer seam		b direction E ∥ double-layer seam		c direction E ∥ holes	
Sample No.	Density	κ	tan δ	κ	tan δ	κ	tan δ
1	1.398	1.0348	.00089	1.0441	.00141	1.0855	.00212
2	2.892	1.0519	.00165	1.0669	.00229	1.0951	.00350
3	3.938	1.0788	.00176	1.1258	.00326	1.1444	.0041
4	4.039	1.0808	.00187	1.1020	.00278	1.1265	.0047
5	4.124	1.0827	.00274	1.1045	.00359	1.1351	.0046
6	4.259	1.0863	.00197	1.1340	.00382	1.1270	.0045
7	4.701	1.0928	.00315	1.1115	.00297	1.1455	.0047
8	5.603	1.0990	.00205	1.1781	.00468	1.1869	.0065
8*	5.603	1.1010	.00330	1.1667	.00628		

* At 100°C, all other values at 25°C

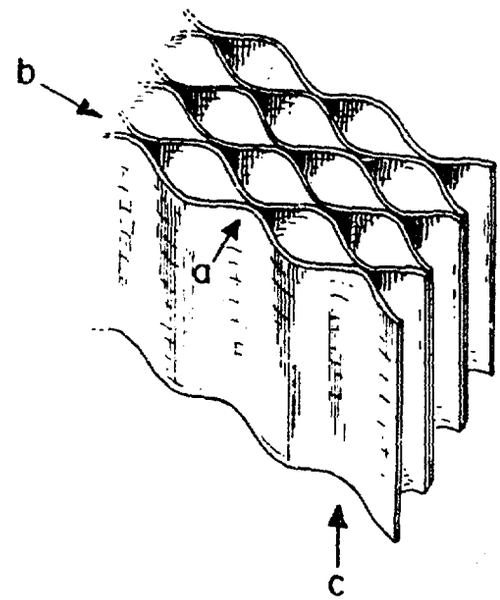

IV. LIQUIDS

VUL-CUP

a,a[1]-bis(t-butyl peroxy) diisopropylbenzene

Freq., Hz	25°C κ	tan δ
10^2	2.633	.0011
10^3	↓	.00011
10^4		.000013
10^5		10^{-5}
10^6		.00005 ± 2
1.8×10^7		
6×10^9		
10^8	2.63	.005 ± 2
10^9	2.60	.0206
3×10^9	2.56	.0378
8.5×10^9	2.40	.056
	99°C	
10^9	2.26	.0116
3×10^9	2.24	.0184

Hercules Inc.

DI-CUP

dicumyl peroxide

	25°C κ	tan δ
	2.79	.0073
	↓	.00081
		.000115
		.000064
		.00040
	2.97	.0032
	2.73	.0025
	2.70	.0050
	2.57	.0082
	2.515	.0078
	2.495	.0044

Pennwalt Corp., Lucidol Div.

Lucidol

t-butyl perbenzoate

Freq., Hz	25°C κ	tan δ
10^2	-	-
10^3	-	-
10^4	12.17	.17
10^5	12.17	.017
10^6	12.1	.0027
10^7	12.0	.0095
10^8	11.2	.0044
10^9	5.70	.252
3×10^9	4.07	.337
8.5×10^9	3.23	.460

Lupersol 130

2,5 dimethyl-2,5-di(t-butylperoxy)hexyne-3

Freq., Hz	25°C κ	tan δ
10^2	2.656	.00123
10^3	↓	.000123
10^4		.000012
10^5		.000023
10^6		.00012
10^7	2.655	.00121
10^8	2.65	.0066
10^9	2.56	.0235
3×10^9	2.50	.0344
8.5×10^9	2.39	.0505
	99°C	
	2.33	.0076
	2.32	.0154

USP 333 U.S. Peroxygen Div., Argus chemical Corp.

Freq., Hz	25°C κ	tan δ
10^2	3.818	.0170
10^3	↓	.00170
10^4		.00017
10^5		.000027
10^6		.00021
10^7	3.81	.00157
10^8	3.75	.0146
10^9	3.60	.0842
$3x10^9$	3.30	.130
$8.5x10^9$	2.80	.1735

Lupersol 101 Wallace & Tiernan Inc.

2,5-dimethyl-2,5-di(t-butylperoxy)hexane

Freq., Hz	25°C κ	tan δ
10^4	2.66	.000088
10^5	2.66	.000144
10^6	2.66	.000053
10^7	2.65	.00049
10^8	2.64	.0050
10^9	2.62	.0217
$3x10^9$	2.58	.0387
$8.5x10^9$	2.41	.057
$2.4x10^{10}$	2.26	.045
	99°C	
10^9	2.02	.0040
$3x10^9$	2.02	.0068