UNCLASSIFIED

AD NUMBER

AD884027

NEW LIMITATION CHANGE

TO

Approved for public release, distribution unlimited

FROM

Distribution authorized to U.S. Gov't. agencies and their contractors; Critical Technology; MAR 1971. Other requests shall be referred to Air Force Flight Dynamics Lab., Wright-Patterson AFB, OH 45433.

AUTHORITY

AFWAL ltr, 6 Feb 1987

THIS PAGE IS UNCLASSIFIED

AD 884 027

AUTHORITY:
AFWAL etc.,
6 Feb 87

THIS REPORT HAS BEEN DELIMITED
AND CLEARED FOR PUBLIC RELEASE
UNDER DOD DIRECTIVE 5200.20 AND
NO RESTRICTIONS ARE IMPOSED UPON
ITS USE AND DISCLOSURE.

DISTRIBUTION STATEMENT A

APPROVED FOR PUBLIC RELEASE;
DISTRIBUTION UNLIMITED.

AD 884027
AD NO.
DDC FILE COPY

CONTROL - DISPLAY INTEGRATION PROGRAM

AFFDL-TR-70-83
Volume I

HELMET MOUNTED DISPLAY/SIGHT SYSTEM STUDY

R. S. JACOBS, T. J. TRIGGS, J. W. ALDRICH

HUGHES AIRCRAFT CORPORATION

TECHNICAL REPORT AFFDL-TR-70-83 Volume I

MARCH 1971

DDC
RECEIVED
MAY 28 1971
A

This document is subject to special export controls and each transmittal to foreign governments or foreign nationals may be made only with the prior approval of the Air Force Flight Dynamics Laboratory (FGR), Wright-Patterson Air Force Base, Ohio 45433.

AIR FORCE FLIGHT DYNAMICS LABORATORY
AIR FORCE SYSTEMS COMMAND
WRIGHT-PATTERSON AIR FORCE BASE, OHIO

133

NOTICE

When Government drawings, specifications or other data are used for any purpose other than in connection with a definitely related Government procurement operation, the United States Government thereby incurs no responsibility nor any obligation whatsoever; and the fact that the government may have formulated, furnished, or in any way supplied the said drawings, specifications, or other data, is not to be regarded by implication or otherwise as in any manner licensing the holder or any other person or corporation, or conveying any rights or permission to manufacture, use, or sell any patented invention that may in any way be related thereto.

Copies of this report should not be returned unless return is required by security considerations, contractual obligations, or notice on a specific document.

UNCLASSIFIED
Security Classification

DOCUMENT CONTROL DATA - R & D

(Security classification of title, body of abstract and indexing annotation must be entered when the overall report is classified)

1. ORIGINATING ACTIVITY *(Corporate author)*
Hughes Aircraft Company
Culver City, California

2a. REPORT SECURITY CLASSIFICATION
UNCLASSIFIED

2b. GROUP

3. REPORT TITLE
HELMET MOUNTED DISPLAY/SIGHT SYSTEM STUDY

4. DESCRIPTIVE NOTES *(Type of report and inclusive dates)*
FINAL REPORT - JANUARY 1969 TO APRIL 1970

5. AUTHOR(S) *(First name, middle initial, last name)*
Robert S. Jacobs
Thomas J. Triggs
Jack W. Aldrich

6. REPORT DATE
March 1971

7a. TOTAL NO. OF PAGES
124

7b. NO. OF REFS
24

8a. CONTRACT OR GRANT NO.
Contract No. F33615-69-C-1191

b. PROJECT NO.

c.

d.

9a. ORIGINATOR'S REPORT NUMBER(S)
P70-139

9b. OTHER REPORT NO(S) *(Any other numbers that may be assigned this report)*
AFFDL-TR-70-83, Volume I

10. DISTRIBUTION STATEMENT
This document is subject to special export controls and each transmittal to foreign governemnts or foreign nationals may be made only with the prior approval of the Air Force Flight Dynamics Laboratory (FDCR), Wright-Patterson AFB, Ohio 45433.

11. SUPPLEMENTARY NOTES

12. SPONSORING MILITARY ACTIVITY
Air Force Flight Dynamics Lab
Wright-Patterson AFB, Ohio

13. ABSTRACT

This report describes a study effort to determine the applicability of a helmet mounted sight/display system with emphasis on applications to the high performance F-15 aircraft. The missions of that aircraft were analyzed to determine pilot functions where such helmet mounted systems could be used to advantage.

Alternative approaches to the problem of helmet angle pick-off were evaluated in order to select the most suitable angle measuring techniques. An evaluation of selected helmet mounted display characteristics was carried out both in the laboratory and in flight test. Results from these studies led to recommendations concerning future experimental programs.

A preliminary design of a combined helmet sight/display device was based on the findings of the analytical and experimental investigations.

DD FORM 1 NOV 65 1473

UNCLASSIFIED
Security Classification

Security Classification

14 KEY WORDS	LINK A ROLE	LINK A WT	LINK B ROLE	LINK B WT	LINK C ROLE	LINK C WT
Helmet Mounted Sught						
Helmet Mounted Display						
Display Occlusion						
F-15 Display Requirements						
Binocular Rivalry Image Superimposition						

Security Classification

HELMET MOUNTED DISPLAY/SIGHT SYSTEM STUDY

R. S. JACOBS, T. J. TRIGGS, J. W. ALDRICH

HUGHES AIRCRAFT CORPORATION

This document is subject to special export controls and each transmittal to foreign governments or foreign nationals may be made only with the prior approval of the Air Force Flight Dynamics Laboratory (FGR), Wright-Patterson Air Force Base, Ohio 45433.

FOREWORD

This technical report documents the results of a Helmet Mounted Display/Sight System Study conducted under USAF contract number F33615-69-C-1191 the objective of which was to determine the applicability of a helmet mounted sight/display system to a high performance air superiority aircraft of the F-15 type.

The contract was initiated under Project 6190, "Control Display for Air Force Aircraft and Aerospace Vehicles" which is managed by Mr. John H. Kearns, III as Project Engineer and Principal Scientist for the Control Systems Research Branch (FDCR), Flight Control Division, Air Force Flight Dynamics Laboratory, Wright-Patterson Air Force Base, Ohio. The work was sponsored by the F-15 Systems Program Office, Project 328A and directed by Mr. Eldon M. Bobbett (FDCR) as Task Engineer.

The work was performed by the Display Systems and Human Factors Department, Hughes Aircraft Company, Culver City, California with Mr. Robert S. Jacobs serving as Project Engineer for Hughes Aircraft Company. The authors wish to acknowledge the assistance on the project of G. K. Slocum, W. L. Carel, M. L. Hershberger, G. Wolfson, and W. C. Hoffman.

This report covers work conducted during the period 15 Dec 1968 and 15 July 1969. It was released by the authors in April 1970.

This technical report has been reviewed and is approved.

William D Knox

WILLIAM D. KNOX, Lt Colonel, USAF
Chief, Control Systems Research Branch
Flight Control Division

ABSTRACT

This report describes a study effort to determine the applicability of a helmet mounted sight/display system with emphasis on applications to the high performance F-15 aircraft. The missions of that aircraft were analyzed to determine pilot functions where such helmet mounted systems could be used to advantage.

Alternative approaches to the problem of helmet angle pick-off were evaluated in order to select the most suitable angle measuring techniques. An evaluation of selected helmet mounted display characteristics was carried out both in the laboratory and in flight test. These studies included viewing F-15 type sensor imagery that would be presented in the helmet mounted display. Results from these studies led to recommendations concerning future experimental programs.

A preliminary design of a combined helmet sight/display device was based on the findings of the analytical and experimental investigations.

TABLE OF CONTENTS (Continued)

IV HELMET MOUNTED DISPLAY 39

INTRODUCTION 39
SURVEY OF HUMAN FACTORS DATA ASSOCIATED WITH HELMET MOUNTED DISPLAYS 39

Binocular Rivalry 39
Image Superimposition 41
Biocular HMD (Image Alignment) 42
Display Magnification 43
Frame of Reference 43

DISPLAY DEVICES USED IN EXPERIMENTATION 45

Occluded Display 45
See-Through Display 47

LABORATORY EVALUATION OF HMD 49

Occluded Display 50
See-Through Display 51
Visual Subtense 53
Comments on Optics Exit Pupil for the Occluded Display 53
Laboratory Viewing of Typical Display Imagery 54

FLIGHT TEST EVALUATION OF THE HMD 54

Introduction 54
Apparatus 56
Flight Details and Routes 57
Test Results and Discussion 61

CONCLUSIONS BASED ON LABORATORY AND FLIGHT EVALUATION 64
HELMET MOUNTED DISPLAY MECHANIZATION 65

CRT Evaluation 65
Additional Evaluation of the CR 3015 69
Helmet Mounted Display Optics Tradeoff 72
Electrical Circuit Design 76
Mechanical Design 80

V HELMET MOUNTED SIGHT 85

INTRODUCTION 85
FUNCTIONAL REQUIREMENTS 85

TABLE OF CONTENTS (Continued)

V (Cont) HELMET SIGHT TRADEOFF 85

Introduction 85
Error Analyses 88
Helmet-Mounted Rate Gyro Coupling System 88
Light Source and Sensor System 95
Other Error Sources Not Covered in This Analysis . . 109
Results and Conclusions 111
Recommendations 113

VI RECOMMENDED HELMET MOUNTED DISPLAY/SIGHT SYSTEM DESIGN 115

VII RECOMMENDED FUTURE RESEARCH 119

LABORATORY RESEARCH 119
DESIGN OPTIMIZATION 121

REFERENCES 123

LIST OF ILLUSTRATIONS

Figure		Page
1	The See-through Display on the Experimental Helmet	6
2	Cockpit Scene in Aero Commander Aircraft Showing the Helmet Apparatus and the Subject's Location	7
3	Block Diagram of Recommended Helmet Display/Sight System Configuration	8
4	Recommended Helmet Display/Sight System Configuration	9
5	HUD, VSD, and HSD for TACAN steering Mode	21
6	Navigation Update Modes Diagram	24
7	VSD, Radar Search	25
8	VSD, Head Down Attack	25
9	Head Down Air-to-Air Attack Modes	27
10	HUD During Missile Attack	31
11	HUD During Gun Attack	31
12	HUD, Air-to-Ground CCIP	32
13	VSD Radar Ground Map	34
14	Optical Layout of an Occluded HMD	45
15	Overall Layout with Optical Details for 63° and 48° Visual Subtense Displays	46
16	Overall Layout with Optical Details for 34°, 28° and 19° Visual Subtense	47
17	Occluded Display System Shown Mounted on a Flight Helmet	48
18	See-Through HMD Configuration	49
19	View at See-Through Eyepiece	50
20	Cockpit Scene in Aero Commander Aircraft Showing the Helmet Apparatus and the Subject's Location	57
21	The Occluded Display on the Experimental Helmet	58
22	The See-through Display on the Experimental Helmet	59
23	External View of Aero Commander Showing Windshield and Window Visibility, with Experimental Subject Located in the Right Seat	60
24	Experimental Equipment Rack Mounted in the Aircraft	61
25	Small CRTs Considered for HMD Application	67
26	Size and Weight Characteristics of CRTs	68
27	Operator Adjusted Optimum Brightness for Various Operator Adaptation Levels and Type of Scene	71
28	Folded Refractive System	73
29	Folded Refractive System with Beamsplitter	74
30	Off Axis Reflective System	75
31	On Axis Reflective System	75
32	Deflection Amplifier	77
33	Video Amplifier	78

LIST OF ILLUSTRATIONS (Continued)

Figure		Page
34	Sync Separation and Sweep Generation	79
35	Top Mount	81
36	Side Mount	81
37	Air Force Mask - Underslung (side)	81
38	Air Force Mask - Underslung (front)	82
39	Navy Mask - Underslung (side)	82
40	Navy Mask - Underslung (front)	82
41	Latch Layout	83
42	Gyro Helmet Sight Attitude Measuring System	86
43	Honeywell System	88
44	Volume of Space for Sighting Operation	94
45	Error Sources in Helmet Sight System	96
46	Eyepiece Alignment	97
47	LSA Coordinator	99
48	Error Sources for Mirrors and Motor Axis Location	101
49	Error Equation Solution	103
50	LSA Side View	103
51	Helmet and Aircraft Coordinate Systems	109
52	Sighting Error as a Function of Target Angular Rate	110
53	Helmet Sight Tracking Accuracies	110
54	Block Diagram of Recommended Helmet Display/ Sight System Configuration	116
55	Recommended Helmet Display/Sight System Configuration	117

LIST OF TABLES

Table		Page
I	Applications Summary	3
II	F-15 Display Requirements	4
III	Characteristics of Three Small Cathode Ray Tubes Applicable to Helmet Mounted Displays	5
IV	HUD Mode Symbols	17
V	VSD Mode Symbols	18
VI	HSD Mode Symbols	19
VII	Applications Summary	36
VIII	F-15 Display Requirements	37
IX	Hollorman Test Target Tape Details	55
X	Characteristics of Three Small Cathode Ray Tubes Applicable to Helmet Mounted Displays	66
XI	Contrast Characteristics of CRTs	70
XII	Error Distribution for Gyro System	89
XIII	Scale Factor and Linearity Errors	90
XIV	Total Errors at Integrator Input	92
XV	Designation of Error Sources	104
XVI	Summary of Accuracy Analysis	107
XVII	Error Analysis Results	112
XVIII	Tradeoff Summary	114
XIX	Study Parameters for Recommended Laboratory Research Program	120

SECTION I

INTRODUCTION AND SUMMARY

PROGRAM OBJECTIVE

The development of helmet mounted cathode ray tube displays and methods for measuring a helmet line of sight has opened up the possibility of a combined helmet control-display system. The purpose of this program was to determine the applicability of such a system for an advanced tactical aircraft of the F-15 type.

PROGRAM SCOPE

The study program included the following major accomplishments:

- The configuration and operational sequences postulated for the F-15 weapon system were analyzed to determine pilot functions where the helmet mounted sight (HMS), helmet mounted display (HMD), or combination helmet sight and display (HMS/D) could be used to advantage.

- A survey of human factors data associated with helmet mounted displays was conducted. The principle parameters reviewed were monocular versus biocular presentation, occluded versus see-through displays, binocular rivalry, visual subtense of the display, ambient and display illumination, and frame of reference.

- The helmet mounted display was evaluated in the laboratory. The laboratory studies centered around measurement of HMD performance parameters (brightness, contrast, resolution) and evaluation of the HMD for display of various types of sensor data. Tests were performed upon CRT's suitable for HMD application to measure operating characteristics under subjectively optimized operating conditions.

- To gather information relative to performance of the helmet mounted display in an airborne environment, a brief series of flight tests were conducted. Alternative display mechanizations were used to evaluate the potential of the helmet mounted display for flight control, terrain following, terrain avoidance, and landing.

- An evaluation of three helmet pick-off and sight devices was performed. This consisted of an error analysis and a consideration of other critical factors important for selection of the sight technique.

- A preliminary design of a combined helmet sight/display device was performed based on the findings of the analytical and experimental investigation. Included in this design was a trade-off of optical techniques for the helmet mounted display/sight.

- A program for future research was developed.

In addition to the above accomplishments, a HMS requirements analysis using a computer dogfight simulation was conducted to ascertain the tactical advantage gained by an aircraft system equipped with a helmet mounted sight, and one-man and two-man aircraft crew requirements for advanced tactical aircraft were reviewed. The results of this work contains classified information and can not be reported here. A separate classified supplement to this report contains the HMS analysis and crew size information.

PROGRAM FINDINGS

Helmet Mounted Sight/Display Applications

Analysis of the F-15 mission revealed a number of potential applications of a helmet mounted sight, a helmet mounted display, or a combined sight/display. The results of this analysis are summarized in Table I. The dominant display parameter requirements to satisfy these applications are summarized in Table II.

Laboratory Evaluation of Helmet Mounted Display

HMD image quality was found to be adequate for viewing symbology and detailed pictorial information. At the present time, HMD image quality is considered about equivalent to conventionally sized panel mounted CRT displays.

With an occluded HMD, very little image degradation occurred with an untextured external field over a range of ambient brightness from 5 to 2000 foot lamberts. With a textured external visual field, interaction between the HMD image and the external field, as seen separately by the two eyes, occurred, and as a result the HMD information was slightly degraded. When ambient brightness was increased above 2000 foot lamberts, the pictorial scene became "washed out" and contrast was significantly reduced. The optimum occluded HMD highlight brightness was found to be 20 foot lamberts.

Evaluation of low and high transmission see-through HMD's revealed that the maximum acceptable light transmission through the see-through optics was 1 percent for daytime use (approx. 4000 foot lamberts). Low transmission optics (15 percent transmission) was

Table 1. Applications Summary

Mission Segment	Helmet Device		
	Display	Sight	Combination
Take-off	0	0	0
Cruise	1 (Reference Material)	0	0
ILS and Land	1 (If Pattern Sensor Used)	0	1
Nav. Update			
Visual Flyover	1 (Reference Material)	0	0
Visual HUD	0	[illegible]	0
Radar	1	0	2
B-Scan Search/Attack	1	0	1
TV Identification	2	0	2
Visual Air Search/ Acquisition			
Boresight	0	0	0
HUD/Auto	0	0	0
LCOS	0	0	0
HMS	0	2	0
Air-to-Ground Attack			
CCIP	0	1	1
Visual Aided	0	1	1
Manual	0	0	0
Radar	1	0	2
Maverick	1	0	2
Walleye	1	0	2
THWS	2	0	1

Key: 0 = No application, 1 = Potential application,

2 = Recommended application

Table II. F-15 Display Requirements

Parameter	THWS	TV Ident.	A/G Electro-optical	Radar A/G
Resolution (TV Lines Per Diameter)	450	850	450	512
Shades of Gray	2	10	10	8
Frame Rate (Hertz)	60	30	30	30
Apparent Display Size (inches) at 25 inch viewing distance	3	10	5	5

acceptable for ambient conditions less than 80 foot lamberts. High transmission optics (44 percent transmission) was acceptable for ambient conditions less than 1000 foot lamberts. For both low and high transmission optics, the optimum tube highlight brightness was 50 foot lamberts.

Comparison of 19-, 34-, 48-, and 63-degree visual subtenses, obtained using different HMD optical systems, indicated the 34-degree subtense was most pleasing. Generally, exit pupil size was a problem. The 4-mm exit pupil was too small for even the smallest 19-degree visual subtense display.

Viewing radar, TV, and air-to-air targets on the HMD showed good detail was usually discriminable, and there was no picture degradation for high contrast pictures. There was some competition between a textured field to the open eye and detailed information in the HMD, as noted previously. In some cases, the competition interfered significantly with the ability to extract detailed information from the HMD. This finding was not observed with symbolic information presented on the HMD or with low detail photographic information.

Laboratory evaluation of brightness, contrast, and resolution of three cathode ray tubes yielded adequate performance, and all three tubes were judged acceptable. However, the electromagnetic tubes can deliver higher brightness and still maintain small spot size. They also have the capability to operate the cathode near ground potential and to change and adopt the deflection yoke to the deflection signal and cable requirements. Manufacturer stated characteristics of these tubes are given in Table III.

Table III. Characteristics of Three Small Cathode Ray Tubes Applicable to Helmet Mounted Displays

Tube	Size			Deflection Technique	Focus Technique	Total Resolution (Shrinking Raster) (Per MIL-E-1E)	Brightness High-light Inscribed Raster	Notes
	Max O.D.	Max Length	Screen Size					
CR3015	1.11 In.	5.0 In.	0.75 In. Dia	M	E	800 lines/Dia	175 Ft-L at 7 KV	Encapsulated with Deflection Coil P1, P4 4.2 Os
WX-4527-P	1.125 In.	7.0 In.	0.6 In. Dia	M	E	800 to 1000 Lines/Dia	35 Ft-L at 8 KV	P20 3.7 Os
1E27P20	0.9 In.	4.76 In.	4.76 In. Dia	E	E	800 Lines/Dia at 2.5 KV	20 Ft-L at 2.5 KV	P20 1.13 Os

Flight Test Evaluation of Helmet Mounted Display

Five flights were made in an Aero Commander. Four of the flights were made during daylight hours; the fifth flight was flown during dusk and at night. A Shibaden TV camera was mounted on the left side of the pilot's helmet with the HMD on the right side as shown in Figures 1 and 2.

Under normal daylight brightness, difficulty was encountered using the HMD when the other eye was exposed. Retinal rivalry effects were marked under these conditions, and it was found necessary to wear an eyepatch covering the left eye. During the nighttime flight, there was no need for an eyepatch or filter over the open eye. With the see-through HMD, a 9 percent transmission filter proved suitable under all daylight conditions, except when flying west into the late afternoon sun. The 9 percent filter did, however, make cockpit instrument reading difficult. A variable light transmission filter was recommended as a solution to this problem. A definite need for aircraft reference information on the HMD image was discovered. With no reference other than the image in the display, subjects were unable to separate motion of the scene due to head orientation from motion due to aircraft attitude and azimuth heading, and they experienced disorientation. A partial solution to this problem was obtained by placing horizontal and vertical opaque strips of tape on the aircraft windshield. Peripheral visual cues which provide information on the angular position of the head with reference to the axes of the aircraft were also found to be lacking in the HMD system. These

Figure 1. The See-through Display on the Experimental Helmet

cues are present in normal vision but are absent from the HMD because of the restricted field of view.

Flying terrain following and terrain clearance with the HMD revealed that pilots could judge lateral distance with reasonable accuracy, but altitude judgements were less accurate. Repeated landings accomplished with the HMD showed that altitude and drift control was not as precise as normal contact flight, but landing could be satisfactorily accomplished. In general, the flight tests indicated that reasonable accuracy of aircraft control in complex ground referenced maneuvers could be accomplished using an HMD.

Helmet Mounted Sight Evaluation

Evaluation of rate gyro, pantograph, and photo-optical HMS line of sight pick-off techniques showed the rate gyro approach to produce an error of 2 degrees and requires frequent alignment. The pantograph and photo-optical approaches meet a 10-milliradian accuracy requirement – 6.05 and 8.12 milliradians, respectively. A

Figure 2. Cockpit Scene in Aero Commander Aircraft Showing the Helmet Apparatus and the Subject's Location.

drawback of the pantograph technique is the mechanical linkage required which could be a safety hazard in high performance aircraft in the event of emergency ejection. The photo-optical HMS was recommended for high performance aircraft of the F-15 type. It meets the accuracy requirements, does not present a safety hazard, and is considered to be a moderate development risk system.

Recommended Helmet Mounted Display/Sight System Design

In arriving at an optimum design for a combined HMS/D, electrical and mechanical design, CRT, optics, and line of sight pick-off techniques were evaluated. Safety, weight, accuracy, and field of view considerations were an integral part of the evaluation.

The recommended HMS/D design is illustrated in Figures 3 and 4. It consists of a photo-optical light source and sensor pick-off device for measuring the helmet line of sight, a CR 3015 CRT for the display device, and on axis reflective optics for presenting the display to the pilot.

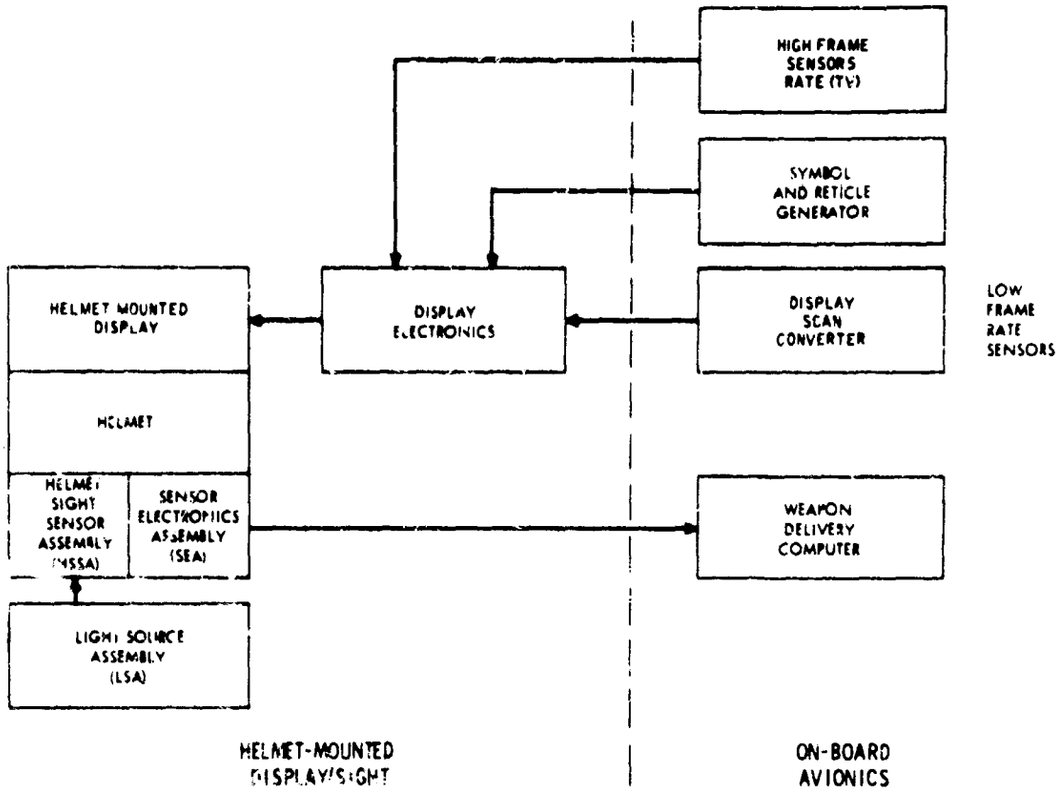

Figure 3. Block Diagram of Recommerded Helmet Display/Sight System Configuration

Recommended Future Research

A program for future research was developed. The recommended program has three phases:

1. Laboratory study across a broad range of HMS/D parameters and advanced tactical aircraft functions.

2. Design optimization study of electrical, mechanical, and optical configuration design, and

3. Flight test evaluation of selected designs with qualitative and quantitative data collection.

NOT REPRODUCIBLE

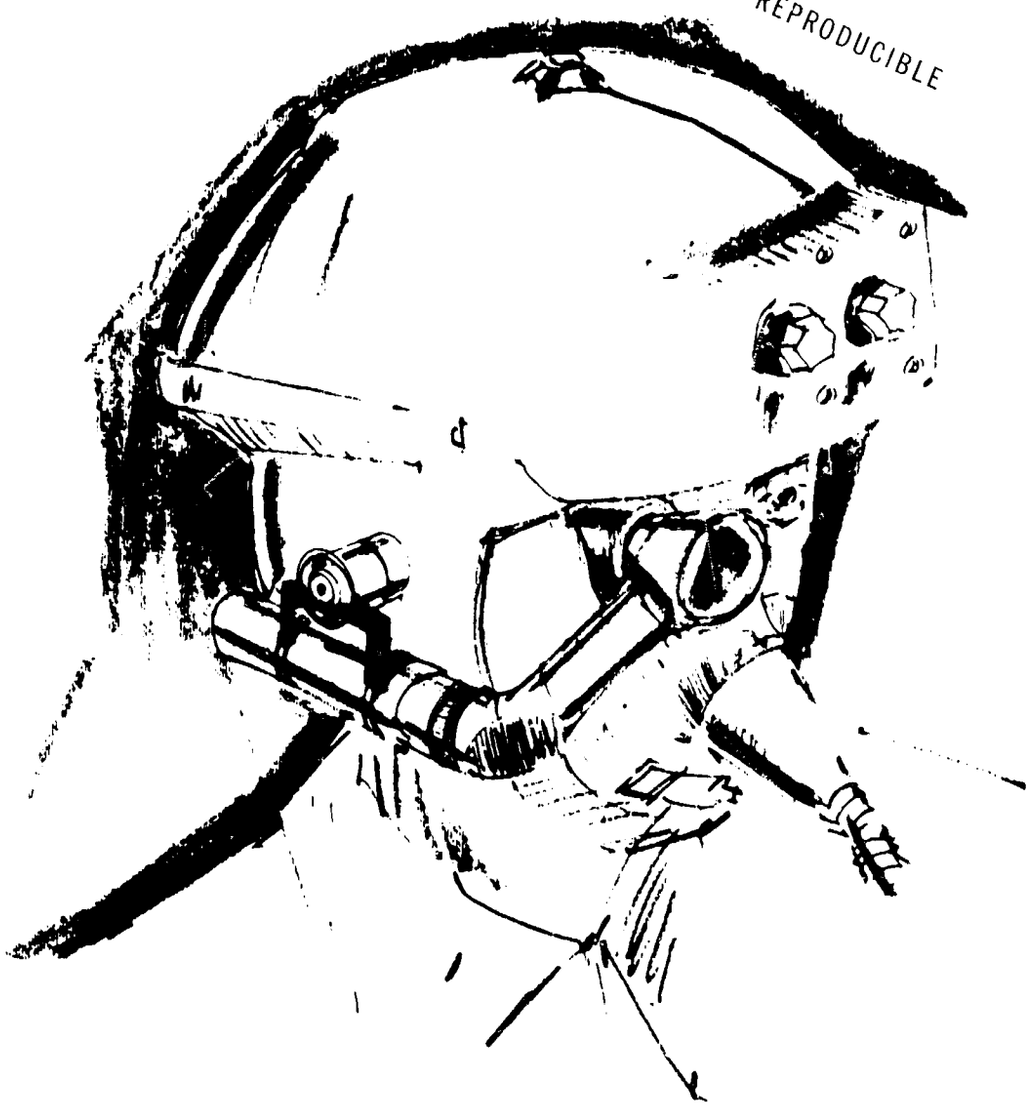

Figure 4. Recommended Helmet Display/Sight System Configuration

SECTION II

BACKGROUND

Considerable work has been accomplished on helmet-mounted sights and displays over the past decade. Hughes Aircraft Company with its introduction of the Electrocular display concept early in 1958 (Hall and Miller, 1960) was instrumental in developing hardware that made possible the examination of the merits of this class of device.

As nearly as it may be determined, the notion of introducing a small CRT display as a head-mounted device was suggested earlier by the Navy during the course of the VIP program. A mockup was constructed for the Navy by the Varo Corp of Garland Texas who used a CRT developed by the National Union Electric Corp. Unfortunately, this unit was destroyed by a fire at the Varo plant, and the program was subsequently dropped. Other early work, oriented more toward device development than toward the requirements of the human observer, was the construction of an optical fire control system by the Farrand Optical Co. This was a head-mounted periscope which operated as a gun sight and did not contain a CRT display.

At this juncture, Miller and Hall at Hughes Aircraft Company's Ground Systems Group began a series of human factors experiments, using an optical bench, to determine the best means of introducing a display image to the pilot without conflicting with his natural forward vision. These early experiments permitted only a monocular view of the target.

Although each eye of the subject received different visual inputs, it was demonstrated that this did not prohibit perception of both sets of information. Further results from these experiments pointed out that the information should be presented in a bright format against a dark background, with the focal plane of the displayed image no closer than 10 feet.

In 1960 as an outgrowth of their previous work, Hall, Miller, and Musselman (1960) tested a Hughes developed model of the Electrocular. This unit, for the first time, permitted field tests of a portable head-mounted CRT display system under prolonged periods of observation in order to evaluate its possible effects upon the observer. This apparatus provided for viewing the virtual image of a CRT display at focal distances ranging from 20 inches to 20 feet with the image subtending an angle of 22 degrees. The equipment provided a "see-through" feature which was accomplished by introducing the CRT image to the observer via a partially reflecting eyepiece. Experiments were conducted to determine the mean detection frequency of subjects monitoring a radar using the Electrocular

PRECEDING PAGE BLANK

against a second group monitoring a conventional console. Although the results of this particular experiment were inconclusive, it was found that the subjects experienced little visual fatigue and that the display was seen as distinct and separate from the surrounding environment, not occluding other visual tasks or displays in the subject's line of vision. Further studies were conducted on operator fatique and binocular rivalry using prolonged periods (2 to 3 hours) of observing commercial TV via the Electrocular against various background conditions.

It became of interest, during the ANIP program, to examine the possibility of synthesizing a display device that would provide both a "head-up" and a "see-through" capability. Of primary concern was disorientation during the transition from VFR to IFR in helicopter flight. A study was conducted by the Bell Helicopter Company (Fedderson, 1962) which resulted in the introduction of a contact analog display into a head-mounted display device. It was concluded after extensive testing on a moving-base simulator that pilot performance using this display was independent of head orientation.

In 1963, the Display Systems and Human Factors Department at Hughes (Culver City) designed and constructed a Helmet-Mounted Display for flight test evaluation by the Naval Air Test Center, Patuxent River, Md. The results of these flight tests included information concerning the following:

1. Head room
2. Comfort
3. Vision obstruction
4. Ejection
5. General pilot functioning
6. Visual problems
7. Mounting and dismounting of the display to helmet
8. Storage and accessibility.

A helmet-mounted display assembly designed for the in-flight evaluation of several TV image sizes was recently built and delivered on Contract F33-615-68-C-1657 for the 6570th Aerospace Medical Research Laboratory, Wright-Patterson AFB, Ohio. A display and interchangeable optics attachment were developed which provide in-flight adjustment and ready installation or removal from either side of an Air Force HGU-2A/P Flying Helmet. A copy of this display was used for the evaluation of the HMD both in the laboratory and flight test portions of this program.

Meanwhile, advances in the technology of measuring eye and head motion were being made. The Autonetics Division of North American Aviation presented a conceptual scheme for the measurement of head motion at the Third National Symposium of the Society for Information Display (Synder, Ungar, and Sweeny, 1964). The device, which was one of the first combining a sighting system with a display, was called the Helmet Mounted Optical Projection System (HOPS) and the Helmet-position Sensing System (HELPS). This combination provided a ground-stabilized, collimated CRT display for both eyes which was reported to be visible against operational ambient lighting conditions. Coupled to the helmet was a single-axis polaroid reference system which detected the phase difference between a reference beam and one which was rotated due to head azimuth motion. Study results showed that the head sighting system was comparable in performance to a hand actuated joystick operating in the position mode.

Other helmet sighting systems that have been developed have been slanted primarily toward solving the problem of hands-free operation for gun training and target tracking in helicopters. These systems have concentrated on the accuracy of measuring head line-of-sight and consequently are constructed with quite simple optical sight reticles. A technique in this category of device is the Univac (formerly the Sperry-Utah Co.) helmet sight (Aviation Week, 1966), an electromechanical linkage system that permits the pilot to move freely while measuring his head motion relative to the aircraft's axes. The sight, which is in the forward field-of-view of one eye, may be flipped out of the way when not in use.

Hughes Aircraft Company investigated the feasibility of using rate gyros in a helmet optical target sighting system. The helmet-mounted portion of the system consists of micro-miniaturized rate gyros, associated buffer electronics, a helmet indexing system to provide alignment, and an optical sighting mechanism. An accompanying aircraft-mounted system consists of computation concerned with transformation of coordinates, current aircraft position, and compensation.

Minneapolis Honeywell has developed a unique method of measuring the helmet sight angle. The method makes use of wavelength-selective, solid-state photosensitive devices mounted at diverse locations on either side of the helmet. Light incident from a fuselage-mounted scanning source periodically activates the photosensitive devices on the helmet. The precise helmet sighting angle is determined by a time-division pulse measurement scheme.

SECTION III

MISSION AND INFORMATION ANALYSES

INTRODUCTION

In this section, the potential applications of a HMS, a HMD, and a combined HMS/HMD to the F-15 aircraft/avionics system will be considered. For purposes of this analysis, it is assumed that a HMS provides significant advantages for target designation and acquisition by virtue of its large field of view and rapid response capability and that a HMD can provide comparable display quality of the best state-of-the-art panel mounted display with the additional features of a moving head-up frame of reference and a controlled ambient lighting environment. The discussion which follows will encompass the complete F-15 mission; however, those phases of the mission which may profit by the particular qualities of the HMS/HMD in visual tasks will be emphasized.

F-15 CRT DISPLAYS

The F-15 aircraft will be a one-man air superiority fighter with secondary air-to-ground capability. In its primary air-to-air role, it will carry guns, short range missiles, and medium range missiles. For air-to-ground missions, it can carry various types of bombs and TV guided missiles. The sensors will be radar and TV. The avionics will include communications, inertial navigation, and tactical electronic warfare subsystems in addition to sensor, computation, and weapon delivery capability. The single-man F-15 cockpit may contain as many as four cathode ray tube displays — a head-up display (HUD), a vertical situation display (VSD), a horizontal situation display (HSD), and a threat homing and warning system (THWS) display.

Head-Up Display

The HUD provides a collimated image centered about 4 degrees down from the armament datum line (ADL) of the aircraft. One of the purposes of the HUD is to provide suitable information for flight control in the area where the pilot normally looks in order to permit head-up operation and thus facilitate easy transition from visual to instrument flight. Because the image is collimated at infinity, the pilot's eyes can accommodate to both the outside world and the information presented on the HUD.

For air-to-air and air-to-ground weapon delivery, the HUD is an optical sight with an extended field of view. The determination of the field of view appropriate for the F-15 weapon delivery mission is determined by flight control considerations, the gun lead angles required, the air-to-ground weapon inventory carried, the off-axis launch envelope of the air-to-air weapons, and tactics.

PRECEDING PAGE BLANK

The information requirements for the HUD can be categorized by system modes such as navigation, air-to-air combat, or air-to-ground weapon delivery. Table IV shows the information required and the associated symbol for the various F-15 modes.

Vertical Situation Display

The VSD/ADI must provide to the pilot: conventional ADI information (attitude director indicator); aircraft attitude (pitch and roll); and steering commands for navigation, air-to-air weapon delivery, air-to-ground weapon delivery, and landing. In addition, the VSD/ADI is the primary sensor display (radar and TV). The VSD/ADI must, therefore, be compatible with a wide variety of data input formats and data rates. VSD information requirements by mode are provided in Table V.

Horizontal Situation Display

The horizontal situation display (HSD) provides to the pilot all the functions of the conventional horizontal situation indicator (HSI) — course, approach, distance, and bearing. In addition, the HSD serves as the backup sensor display. The symbolic information requirements for the HSD are essentially a duplication of the information that appears on a "hard" HSI. A summary of the information requirements by mode is shown in Table VI.

THWS Display

The primary function of the THWS display will be to warn the pilot of the presence of a threat and provide information of its direction. To the extent possible, the following are required: direction of threat, range of threat, and type of threat.

MISSION SEGMENTS AND HMS/D APPLICATIONS

A representative, but greatly simplified, F-15 mission from takeoff through air-to-air and air-to-ground attacks and landing is described and potential applications of the HMS/HMD are briefly discussed in the remainder of this section.

The mission phases that will be described are as follows:

1. Takeoff
2. Cruise
3. Navigation Update
4. Air-to-Air B-scan Search and Attack
5. Long Range TV Air-to-Air Target Identification

Table IV. HUD Mode Symbols

MEANING/LABEL	SYMBOL	LEGEND: PRIOR LOCK	LEGEND: AFTER LOCK	A/A GUNS: PRIOR LOCK	A/A GUNS: PRIOR LOCK	A/A GUNS: PRIOR LOCK	A/A GUNS: AFTER LOCK	A/A GUNS: AFTER LOCK	A/A GUNS: AFTER LOCK	A/A AMPD: PRIOR LOCK	A/A AMPD: PRIOR LOCK	A/A AMPD: PRIOR LOCK	A/A AMPD: AFTER LOCK	A/A AMPD: AFTER LOCK	A/A AMPD: AFTER LOCK	A/A MISS: PRIOR LOCK	A/A MISS: PRIOR LOCK	A/A MISS: PRIOR LOCK	A/A MISS: AFTER LOCK	A/A MISS: AFTER LOCK	A/A MISS: AFTER LOCK	MAIN RETICLE	A/A VSR (ATTACK OR VSR): BLACK	A/A VSR (ATTACK OR VSR): BRIGHT	A/A VSR (ATTACK OR VSR): AFTER LOCK	A/A VSR (ATTACK OR VSR): AFTER LOCK	A/A VSR (ATTACK OR VSR): AFTER LOCK	A/A VSR (ATTACK OR VSR): TV LARGE	A/A VSR (ATTACK OR VSR): TV RADDOP	A/D VISUAL: CCIP	A/D VISUAL: CCRP	A/D VISUAL: AGBD	A/D OTHER: TV VIEW	A/D OTHER: BLIND	NAVIGATION: T.O. GUIDE	NAVIGATION: BASIC NAV	NAVIGATION: STEERING SOURCE: DEST	NAVIGATION: STEERING SOURCE: TACAN	NAVIGATION: STEERING SOURCE: INS	NAVIGATION: STEERING SOURCE: DATA LINK	NAVIGATION: STEERING SOURCE: NAV FIXES	NAVIGATION: STEERING SOURCE: ALT FIXES
				GUNS	GUNS	GUNS	GUNS	GUNS	GUNS	GUNS	GUNS	GUNS	GUNS	GUNS	GUNS	GUNS	GUNS	GUNS	GUNS	GUNS	GUNS		BLACK	BRIGHT	GUNS	GUNS	GUNS																
AIRCRAFT SYMBOL (MSL)		•	•	•	•	•	•	•	•	•	•	•	•	•	•	•	•	•	•	•	•		•	•						•	•	•	•	•	•	•	•	•	•	•	•	•	•
PULL PITCH LADDER																																			•	•	•	•	•	•	•	•	•
NORMAL LADDER		•	•	•	•	•	•	•	•	•	•	•	•	•	•	•	•	•	•	•	•		•	•						•	•	•	•	•									
MS TAPE																																			•								
MS INDEX																																			•								
MACH TAPE																							•	•									•	•		•	•	•		•	•	•
MACH INDEX																							•	•									•	•		•	•	•		•	•	•
MACH COMMAND																								•																•		
ALTITUDE TAPE																							•	•									•	•	•	•	•	•	•	•	•	•
ALTITUDE INDEX																							•	•									•	•	•	•	•	•	•	•	•	•
ALTITUDE COMMAND																								•																•		
HEADING TAPE																							•	•									•	•	•	•	•	•	•	•	•	•
HEADING INDEX																							•	•									•	•	•	•	•	•	•	•	•	•
HEADING COMMAND																								•													•			•	•	
ROLL COMMAND																																		•			•	•	•		•	
PITCH COMMAND																																							•			•
LOCALIZER SCALE																																							•			
GLIDESLOPE SCALE																																							•			
LOCALIZER INDEX																																							•			
GLIDESLOPE INDEX																																							•			
G LIMITS		•	•	•	•	•	•	•	•	•	•	•	•	•	•	•	•	•	•	•	•																					
G INDEX		•	•	•	•	•	•	•	•	•	•	•	•	•	•	•	•	•	•	•	•																					
ANGLE OF ATTACK TAPE		•	•	•	•	•	•	•	•	•	•	•	•	•	•	•	•	•	•	•	•																					
CUEDOT			•				•	•	•				•	•	•				•	•	•										•	•										
RETICLE, GUNS PRIOR TO LOCK		•		•						•						•																										
RETICLE, GUNS AFTER LOCK			•				•						•						•																							
RETICLE, MISSILE (PRIOR LOCK)					•	•					•	•					•	•												•	•	•										
RETICLE, MISSILE AFTER LOCK								•	•					•	•					•	•																						
CCIP RETICLE, A/G WEAPON BEFORE LOCK																														•	•											
AGBD RETICLE, A/G WEAPON AFTER LOCK																																•										
FLIGHT PATH MARKER																														•	•	•										
PREDICTED IMPACT LINE																														•	•											
CONTINUOUSLY COMPUTED IMPACT POINT (CCIP) A/G WEAPON																														•	•	•										
ATTACK SPEEDING VECTOR								•	•					•	•					•	•																					
AFCDT COMMAND	A						•	•	•				•	•	•				•	•	•																					
ZENITH	Z																						•	•									•	•	•	•	•	•	•	•	•	•
NADIR																							•	•									•	•	•	•	•	•	•	•	•	•
BREAKAWAY							•	•	•				•	•	•				•	•	•									•	•	•										
RANGE NUMERAL			•				•	•	•				•	•	•				•	•	•									•	•	•										

Table V. VSD Mode Symbols

NOMENCLATURE	SYMBOL	AIR TO AIR													AIR TO GROUND														
		BORE, AUTO, HMS			VSD (ATTK OR VI)									ID		VISUAL			TV		BLIND		NAVIGATION						
		PRIOR LOCK								AFTER LOCK														STEERING SOURCE					
		GUNS	SKM	MRM	SEARCH	SRCH & D/A	AAI	E	ACQ	GUNS	SKM	MRM	TV LARGE	TV NARROW	CCIP	ACQ	AIDED	WALLEYE	MAVERICK	PRIOR LOCK	AFTER LOCK	BASIC NAV	DEST.	TACAN	ILS	DATA LINK	MAN. HDG	ALT. HOLD
AIRCRAFT SYMBOL		•	•	•	•	•	•	•	•	•	•	•			•	•	•	•	•	•	•	•	•	•	•	•	•	•
FULL PITCH LADDER (EVERY DEGREE)		•	•	•											•	•	•					•	•	•	•	•	•	•
PARTIAL PITCH LADDER (EVERY 5°)										•	•	•																
HORIZON TABS ONLY					•	•	•	•	•										•	•	•							
ROLL SCALE		•	•	•											•	•	•					•	•	•	•	•	•	•
ROLL INDEX		•	•	•											•	•	•					•	•	•	•	•	•	•
LOCALIZER SCALE																									•			
GLIDESLOPE SCALE																									•			
GLIDESLOPE AND LOCALIZER INDEX																									•			
BANK STEERING																					•		•	•	•		•	
PITCH STEERING																									•			•
RADAR ELEVATION SCALE, INDEX AND EOIAT GIMBAL LIMITS		•	•	•	•	•	•	•	•	•	•	•																
RADAR ELEVATION COMMAND						•																						
DATA LINK TARGET AREA						•																						
RADAR RANGE INDICATOR					•	•	•	•	•	•	•	•																
CURSOR									•	•	•	•									•							
ALLOWABLE STEERING ERROR AND COARSE STEERING SYMBOL										•	•	•																
FINE DOT STEERING										•	•	•																
RADAR AZIMUTH SCALE					•	•	•	•	•	•	•	•																
GROUND PLANE LINE		•	•	•											•	•	•					•	•	•	•	•	•	•
TV OR RADAR DATA					•	•	•	•	•				•	•				•	•	•								
ALPHA-NUMERICS	MODE DEPENDENT	•	•	•	•	•	•	•	•	•	•	•			•	•	•					•	•	•	•	•	•	•
AAI AND E INTERROGATION SYMBOLS	F, Δ,						•	•																				

Table VI. HSD Mode Symbols

NOMENCLATURE	SYMBOL	NAVIGATION					
			STEERING SOURCE				
		BASIC NAV	DEST	TACAN	ILS	DATA LINK	MAN MOD
COMMAND HEADING MARKER	▪ ▪	•	•	•	•	•	•
BEARING OR TRACK POINTER		•	•			•	•
COURSE POINTER				•	•		
COURSE DEVIATION BAR				•	•		
AIRCRAFT SYMBOL				•	•		
COURSE DEVIATION DOTS	• • • •			•	•		
TIME-TO-GO (TTG)					OPTION	•	
ALPHA NUMBERICS		•	•	•	•	•	•
RADAR BACKUP - SAME AS VSD	HSD INSENSITIVE TO FIRE CONTROL MODES EXCEPT FOR DATA LINK AND UNLESS USED AS BACKUP.						
TV BACKUP - SAME AS VSD							

6. Head-Up Air-to-Air Search and Acquisition

7. Head-Up Attack

8. Air-to-Ground Weapon Delivery

9. THWS Countermeasures

10. ILS Approach and Landing

Takeoff

Prior to takeoff, the pilot has selected the appropriate aircraft/avionics subsystems modes for the mission and the takeoff phase and has taxied to the runway. During takeoff, the pilot's primary visual task is to monitor both the runway through the HUD and the flight data projected on the HUD combining glass from a CRT. Although it is

possible to use a combined HMS/HMD to present the information normally shown on the HUD, it is not considered desirable because a fixed frame of reference to the aircraft boresight is required for takeoff.

Cruise

Once the aircraft has attained cruise altitude and speed, the primary task is to steer to a selected destination. The F-15 provides five enroute navigation modes: destination steering, TACAN, data link, manual heading, and basic navigation.

Destination steering is used to navigate to a preset latitude and longitude. Steering is based on a great circle course from the present position to the coordinates of the selected destination. The destination can be either a target, an initial point (IP), or a waypoint. Command heading is displayed on the HUD and the HSD. Command bank angle is displayed on the HUD and VSD. The pilot's task is to null out the heading and bank angle steering errors. In all the navigation modes, Mach, altitude, pitch, roll, and heading are displayed on the HUD, and roll and pitch are displayed on the VSD.

TACAN steering is enabled by tuning to the TACAN channel, setting in the heading of the desired radial on the HSD and selecting the TCN mode. The HUD and the VSD display bank angle error and the normal flight data (altitude, air speed, pitch, etc.). The HSD displays a fixed aircraft symbol, the direction of the selected course, and the deviation from the selected radial via a course deviation bar, a set of arrows, and course deviation dots. A mechanical rotating compass card scale appears on the HSD in all operating modes. The pilot's task is to null the steering error so that the center portion of the deviation bar is aligned with the ends of the bar and against the lubber line. The appearance of the three displays in this mode is shown in Figure 5.

Data link steering commands are selected by tuning to the data link frequency and selecting the data link mode. The HUD displays command Mach, command heading, and command altitude. A pointer showing heading to data link offset destination and a time-to-go circle are displayed on the HSD. The pilot flies the aircraft to follow the commands.

The manual heading mode is provided so that the pilot can steer to a self-selected heading. The HSD heading marker is set to the desired heading on the compass card scale, and the MAN HDG mode is selected. The HUD and VSD provide command bank angle, and the HUD shows command heading.

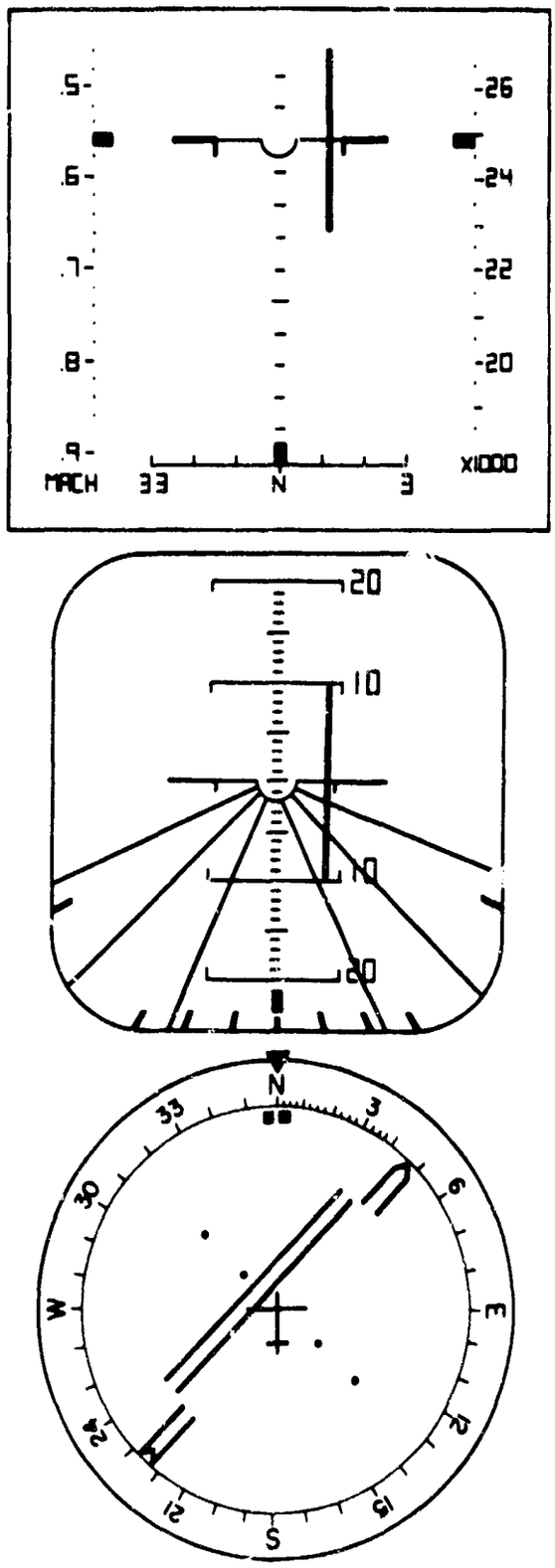

Figure 5. HUD, VSD, and HSD for TACAN steering mode

If none of the navigation modes has been selected, the pilot receives no steering commands and steers the aircraft using the HUD, the VSD, the speed and altitude tapes, and the aircraft track indication on the HSD.

It can be seen that the HUD and HSD are the major displays for the navigation modes. The VSD displays pitch, roll, and command bank steering, but the same information is presented either on the HUD or the HSD in the same modes. The navigation modes can, therefore, be accomplished without using the vertical situation display. The HMD could conceivably be used to display either the HUD or HSD data. However, the use of a HMD to display horizontal situation information is undesirable because of the variable frame of reference resulting from movement of the pilot's head. Studies have shown that a pilot can become highly disoriented when a display of the horizontal situation is located in a position that does not correspond to the pilot-aircraft frame of reference.

Display of flight data and ADI information on the HMD appears to be a feasible utilization. It provides the added capability of being able to look anywhere in the cockpit and still have this information in the immediate field of view. It is difficult to say whether or not there would be any performance differences between a fixed panel mounted display of flight ADI information and the moving frame of reference HMD. Simulation will be required to answer this question and thereby determine more fully the potential utilization of the HMD as an ADI display.

Navigation Update

Three methods of performing airborne position fixes are available to the pilot: visual flyover, visual HUD, and radar (blind). For all three methods, the pilot first selects the fix point preset number for which latitude, longitude, and altitude data have been preset. A FIX pushbutton is then depressed which sets up the subsystems for proper operation and signal routing for position fix.

Visual Flyover The pilot flies the aircraft over the fix point on the ground. When the aircraft is directly over the fix point, the pilot presses a lockon button which initiates update. No potential HMS/HMD applications exist for this navigation update mode.

Visual HUD. For the case where the pilot flies the aircraft to get the fix point in the HUD field of view, the HUD cursor is called up, and the pilot positions the cursor over the fix point and presses a lock-on button, thus causing update. The radar is slaved to the cursor in this mode and at the moment of update measures range to the fix point. The range combined with other data are used to calculate the navigation error.

The HMS could be used in place of the HUD to accomplish this navigation update mode. The sight provides the advantages of offset designation capability with a large field of view. The HUD provides a field of view approximately +4, -12 degrees in elevation and ±9 degrees in azimuth. A HMS may provide up to ±60 degrees elevation and ±60 degrees azimuth field of view. This large field of view provides the capability to make offset navigation updates. By so doing, a greater number of fix points are available for update, and the pilot is less likely to be forced to change course in order to make an update because cloud cover occluded some ground areas. The large field of view provides greater flexibility of mission planning with respect to navigation updates. This application is recommended for the HMS.

Radar. For radar fix, the pilot flies the aircraft toward the selected fix point. When the fix point is within the 40 n. mi. radar ground map range, the pilot selects the radar ground map mode. A radar ground map is displayed on the VSD, and the pilot searches for the fix point on the radar map. As soon as the pilot recognizes the fix point, the VSD cursor is called up. The cursor is placed over the fix point, and a control is activated to expand the radar ground map around the designated fix point. The pilot redesignates the fix point and presses a button to command update.

The HMD could be used in place of the VSD to display the radar ground map. The advantage of so doing is that the pilot could maintain a head-up orientation while viewing the ground map whereas the VSD requires the pilot to assume a head-down position for an extended period of time. Although this is a potential application of the HMD, it should not be recommended without laboratory and/or flight test. A flow diagram illustrating the fix options and a possible use of the HMD is shown in Figure 6.

Air-to-Air B-Scan Search and Attack

The VSD is the primary display for long range air-to-air search and attack. In the search mode, the radar returns are displayed on a B-scan azimuth range rate or range format. After detecting the target, the pilot calls up the cursor with the acquisition control and places the cursor over the target return. The VSD, with target returns and attitude, is shown in Figure 7. He then commands radar lockon at which time steering commands and launch zone data are displayed on both the VSD and HUD. Steering and launch data are presented on the HUD to permit easy transition to a visual head-up attack should conditions warrant, and to allow the pilot to maintain visual surveillance during long range radar attacks. Figure 8 shows attack steering on the VSD.

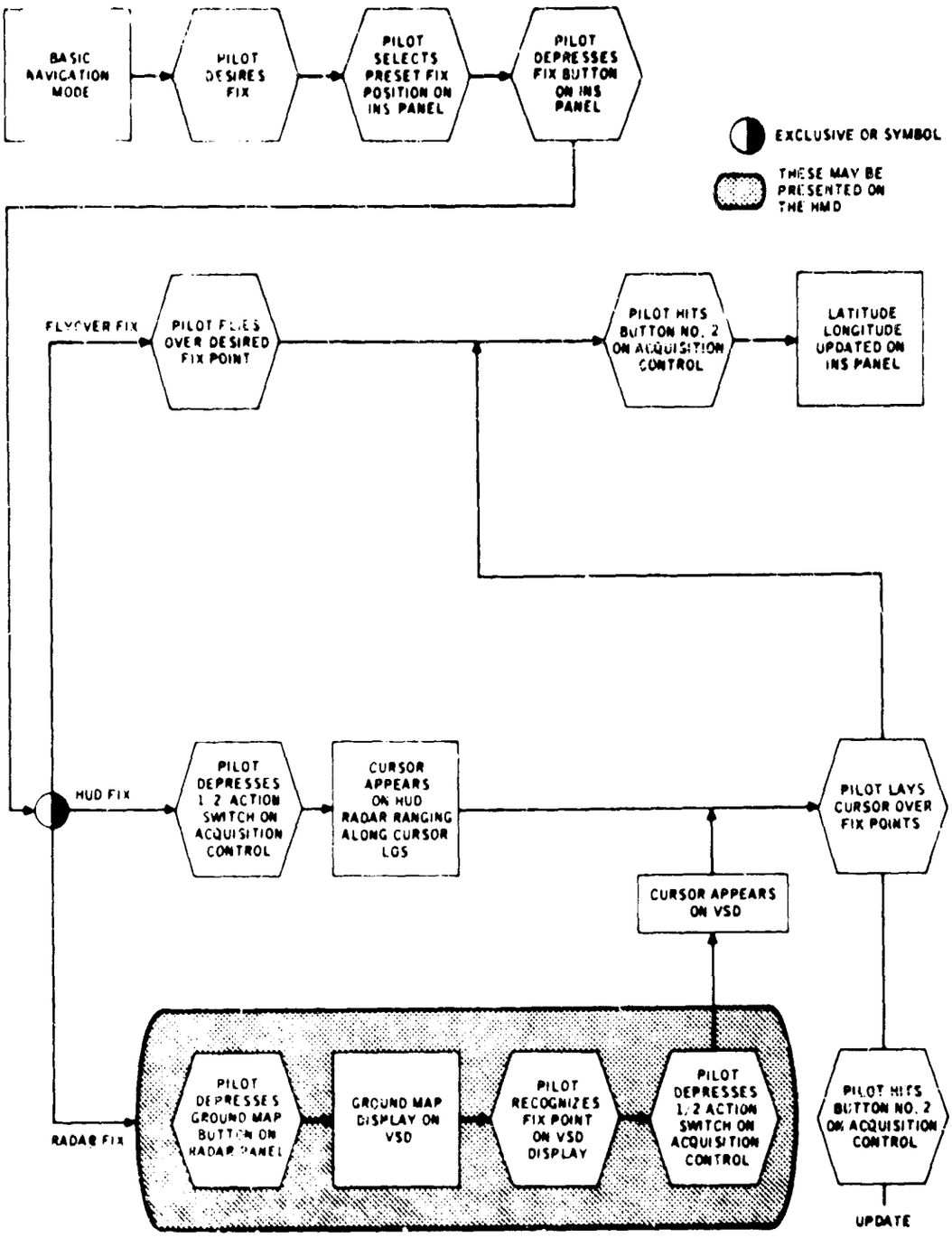

Figure 6. Navigation Update Modes Diagram

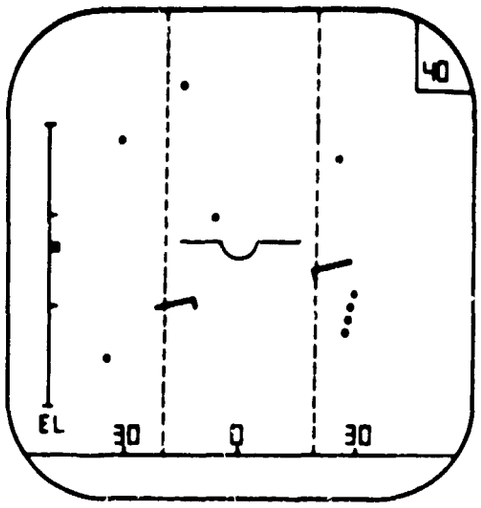

Figure 7. VSD, Radar Search

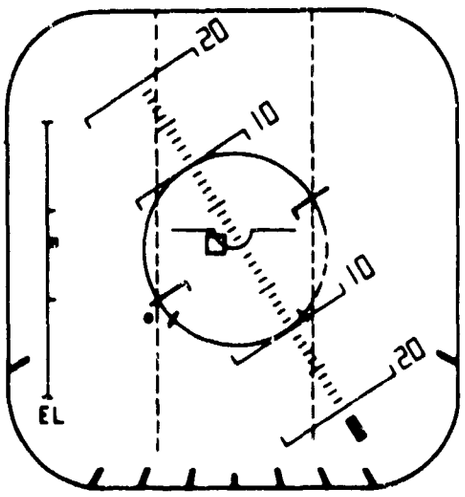

Figure 8. VSD, Head Down Attack

Displaying B-scan radar on the HMD has the advantage of permitting the pilot to maintain a head-up orientation. Thus, the pilot could maintain a search for close range visually detectable targets as well as long range radar detectable targets without having to change his visual accommodation or adaptation level.

The B-scan format, which is in essence a horizontal (azimuth versus range) situation presentation may cause the pilot a frame of reference problem in a HMS/D. As a best estimate, this seems unlikely as the pilot is primarily interested in detecting and designating a target in order to convert to an attack rather than interpret relative positional information. There is, however, a possible problem in designation of the target with a cursor and hand control because of the relationships between the display frame of reference, the head position, and the hand control axes of movement. Laboratory study will be required to answer these uncertainties and the potential utility of the HMD for a B-scan search display.

If the HMD was to be used as a B-scan search display, it would be desirable to also use it as the "head-down" attack display to present steering and launch zone information. To use separate displays for the two consecutive search and attack functions would be ill conceived. Therefore, a HMD should only be considered for B-scan attack in conjunction with its potential application for B-scan search and the converse. The display of the B-scan attack or visual identification symbology on a HMD does not in itself cause any problems or result in any significant advantages. The functions for which a HMD could be utilized in a head down radar attack are shown in Figure 9.

Long Range TV Air-to-Air Identification

The television identification and tracking system provides a long range method of visual identification of a potentially hostile aircraft. In the standard radar-slaved TV-ID mode, the pilot first establishes radar lock. After radar lock on, the pilot depresses a pushbutton. The TV-ID system is slaved to the radar line-of-sight, and a wide field-of-view television presentation is displayed on the VSD. The pilot activates a switch on the acquisition control to stabilize the TV image and slews the TV camera to position the target within the limits of the narrow field of view. A control is activated to get the high power narrow field of view. The pilot slews the TV camera to position the target within tracking gates and commands lock. The pilot then monitors the VSD until the target can be identified. After identification, the pilot re-depresses the switch on the acquisition control to simultaneously break TV lock and return the VSD to the radar steering presentation. Lockon is possible in either the wide or narrow fields of view. A manual track capability is provided when the radar is not operating.

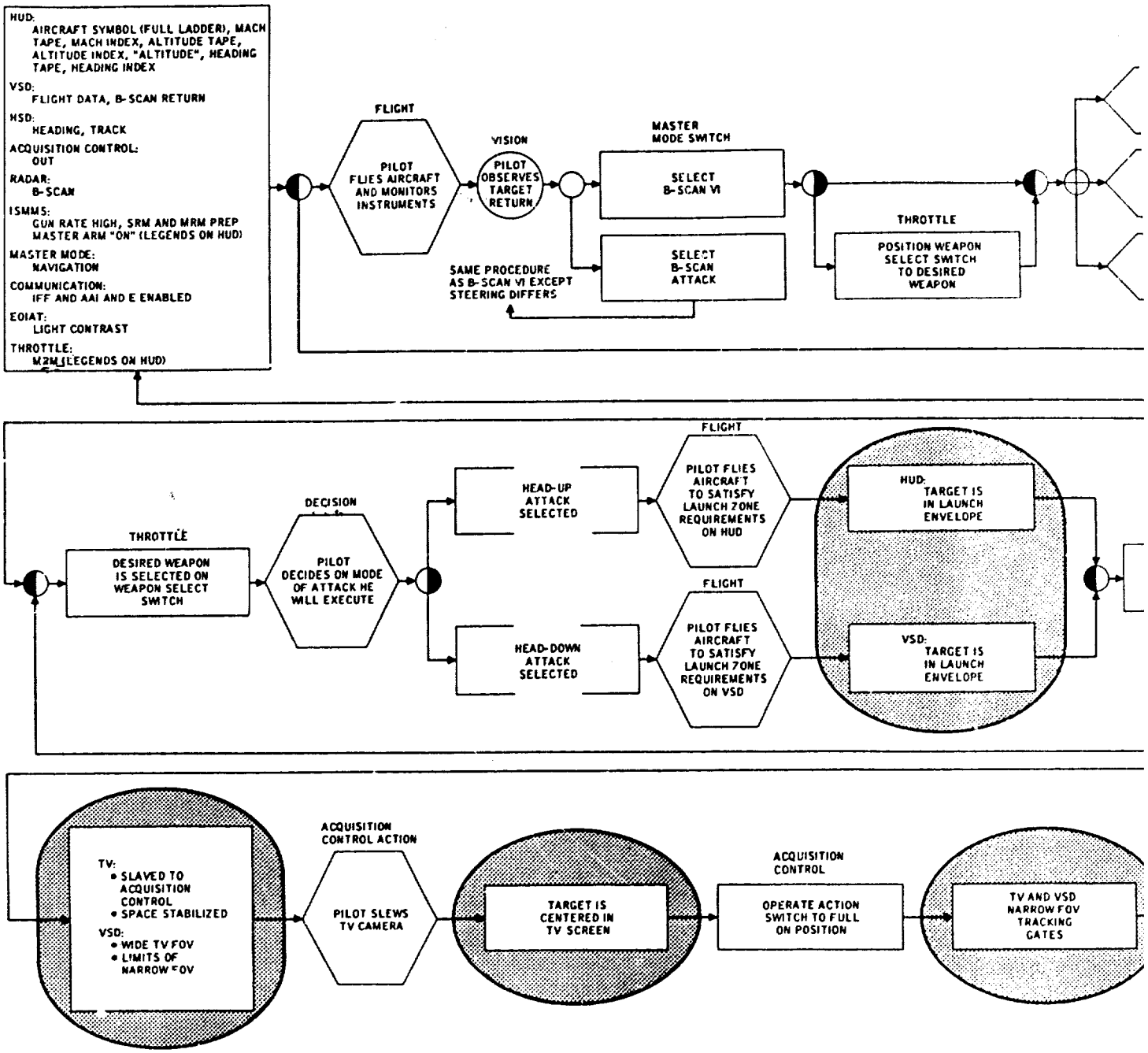
HUD:
AIRCRAFT SYMBOL (FULL LADDER), MACH TAPE, MACH INDEX, ALTITUDE TAPE, ALTITUDE INDEX, "ALTITUDE", HEADING TAPE, HEADING INDEX
VSD:
FLIGHT DATA, B-SCAN RETURN
HSD:
HEADING, TRACK
ACQUISITION CONTROL:
OUT
RADAR:
B-SCAN
ISMMS:
GUN RATE HIGH, SRM AND MRM PREP MASTER ARM "ON" (LEGENDS ON HUD)
MASTER MODE:
NAVIGATION
COMMUNICATION:
IFF AND AAI AND E ENABLED
EOIAT:
LIGHT CONTRAST
THROTTLE:
M2M (LEGENDS ON HUD)
FLIGHT
PILOT FLIES AIRCRAFT AND MONITORS INSTRUMENTS
VISION
PILOT OBSERVES TARGET RETURN
MASTER MODE SWITCH
SELECT B-SCAN VI
SELECT B-SCAN ATTACK
SAME PROCEDURE AS B-SCAN VI EXCEPT STEERING DIFFERS
THROTTLE
POSITION WEAPON SELECT SWITCH TO DESIRED WEAPON
THROTTLE
DESIRED WEAPON IS SELECTED ON WEAPON SELECT SWITCH
DECISION
PILOT DECIDES ON MODE OF ATTACK HE WILL EXECUTE
HEAD-UP ATTACK SELECTED
HEAD-DOWN ATTACK SELECTED
FLIGHT
PILOT FLIES AIRCRAFT TO SATISFY LAUNCH ZONE REQUIREMENTS ON HUD
FLIGHT
PILOT FLIES AIRCRAFT TO SATISFY LAUNCH ZONE REQUIREMENTS ON VSD
HUD:
TARGET IS IN LAUNCH ENVELOPE
VSD:
TARGET IS IN LAUNCH ENVELOPE
TV:
• SLAVED TO ACQUISITION CONTROL
• SPACE STABILIZED
VSD:
• WIDE TV FOV
• LIMITS OF NARROW FOV
ACQUISITION CONTROL ACTION
PILOT SLEWS TV CAMERA
TARGET IS CENTERED IN TV SCREEN
ACQUISITION CONTROL
OPERATE ACTION SWITCH TO FULL ON POSITION
TV AND VSD NARROW FOV TRACKING GATES

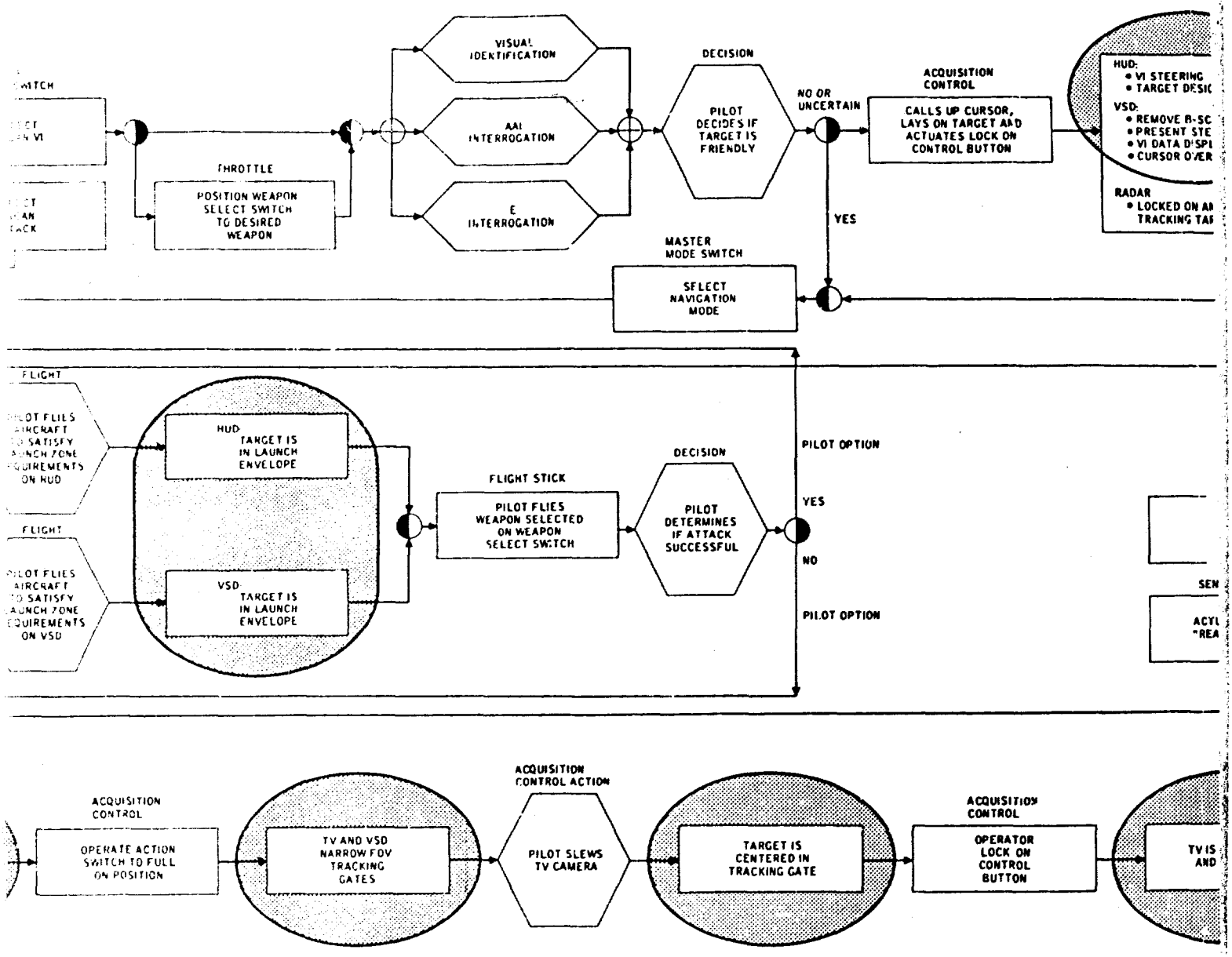
VISUAL IDENTIFICATION
AAI INTERROGATION
E INTERROGATION
DECISION
PILOT DECIDES IF TARGET IS FRIENDLY
NO OR UNCERTAIN
ACQUISITION CONTROL
CALLS UP CURSOR, LAYS ON TARGET AND ACTUATES LOCK ON CONTROL BUTTON
HUD:
• VI STEERING
• TARGET DESIG
VSD:
• REMOVE B-SC
• PRESENT STE
• VI DATA DISPL
• CURSOR OVER
RADAR
• LOCKED ON AN
TRACKING TAR
THROTTLE
POSITION WEAPON SELECT SWITCH TO DESIRED WEAPON
YES
MASTER MODE SWITCH
SELECT NAVIGATION MODE
FLIGHT
PILOT FLIES AIRCRAFT TO SATISFY LAUNCH ZONE REQUIREMENTS ON HUD
HUD TARGET IS IN LAUNCH ENVELOPE
FLIGHT
PILOT FLIES AIRCRAFT TO SATISFY LAUNCH ZONE REQUIREMENTS ON VSD
VSD TARGET IS IN LAUNCH ENVELOPE
FLIGHT STICK
PILOT FLIES WEAPON SELECTED ON WEAPON SELECT SWITCH
DECISION
PILOT DETERMINES IF ATTACK SUCCESSFUL
PILOT OPTION
YES
NO
PILOT OPTION
ACQUISITION CONTROL
OPERATE ACTION SWITCH TO FULL ON POSITION
TV AND VSD NARROW FOV TRACKING GATES
ACQUISITION CONTROL ACTION
PILOT SLEWS TV CAMERA
TARGET IS CENTERED IN TRACKING GATE
ACQUISITION CONTROL
OPERATOR LOCK ON CONTROL BUTTON

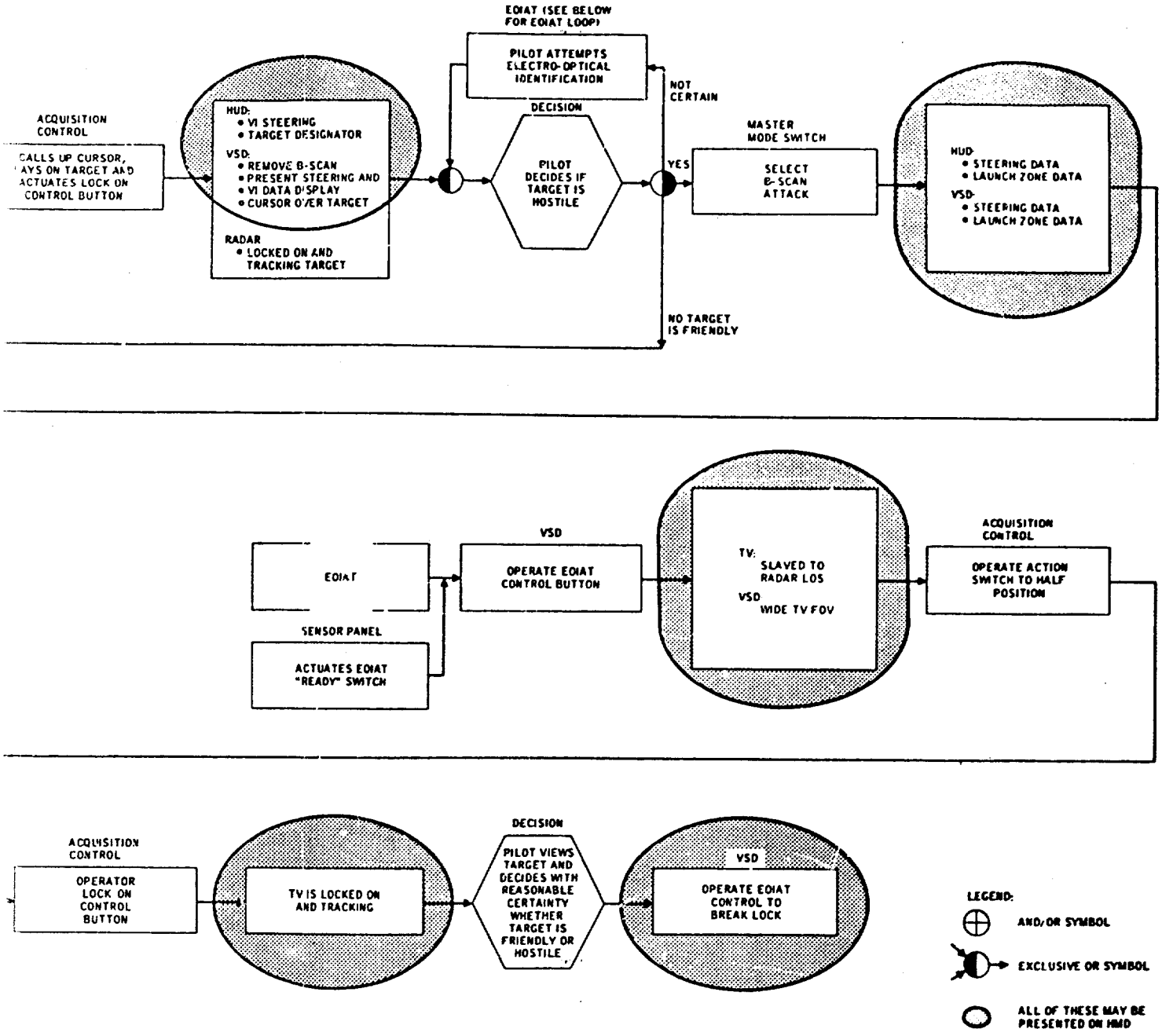

Figure 9. Head Down Air-to-Air Attack Modes

The HMD could be used to display the TV video. The advantage of using the HMD is that the radar B-scan presentation could be retained on the VSD throughout the identification. In this manner, the pilot could keep track of the target's range and progress as well as looking out for new targets. The same potential problem of multiple frames of reference and using a hand control exist here as they do for the B-scan search application.

Head-Up Air-to-Air Search and Acquisition

The primary modes of head-up attack are based on establishment of radar track (angle and range/doppler) of the desired target. The radar derived angle, angle rate, range, and range rate values are used in solving launch (or firing) equations and in generating steering commands. Four head-up air-to-air modes are available in the represented F-15 design for gun or short range missile attack.

Boresight. In the boresight mode, the HUD reticle and the radar antenna are slaved to the aircraft boresight. The pilot steers the aircraft to bring the target within the reticle. Upon pilot command, the radar locks on to the target. An alternate technique is to use the acquisition control to place the cursor and the radar over the target and then command lock-on. In either case, steering commands, launch zone data, and breakaway signal are displayed on the HUD.

HUD Auto (Supersearch). For situations where the target appears within the HUD field of view, the radar can be made to operate in a wide azimuth beam mode (HUD Auto) to rapidly scan the HUD field of view and to automatically lockon and acquire the first target encountered in range. At lockon, a cursor appears on the HUD, indicating the radar line of sight and, presumably, overlays the acquired target. Steering and launch zone information are displayed on the HUD, and the pilot flies the aircraft to complete the attack.

Lead Computing Optical Sight (LCOS). The Lead Computing Optical Sight (LCOS) mode is included in the avionics subsystem to achieve air-to-air attacks when the radar is not in use or is inoperative. The Central System Management Computer (CSMC) computes lead angle based on own aircraft turn rates and a fixed value of range. Stadiametric ranging is used by comparing the target size with the 30 and 50 mil circles on the HUD reticle.

Helmet Mounted Sight. The F-15 design has included the HMS as a basic air-to-air combat mode for offset target acquisition.

The radar antenna and missile seeker are slaved to the HMS line of sight and pointed at the desired target. Upon pilot command, the radar automatically locks on and tracks the first target encountered in range along the line of sight. The pilot may reject the target being tracked by appropriate control action and command acquisition of other targets as desired. If the pilot is unable to achieve radar lockon in this

PRECEDING PAGE BLANK

mode, he may launch the short range missile while pointing the reticle at the target. The short range missile seeker line of sight will have been aligned with the HMS line of sight, and missile preparation will have occurred prior to launch. If the target is within the launch zone at the time of lockon, a small indicator light in the helmet sight illuminates, and the pilot can launch immediately. If the target is out of the launch zone at the time of radar lockon, steering commands are also displayed on the HUD for the pilot to steer the aircraft to the launch zone of the missile.

In all of the head-up acquisition modes, the pilot's task remains essentially the same after radar lock. The aircraft is flown to place a steering reticle over the target aircraft when it is within the HUD field of view. An annulus on the steering reticle with two tic marks represents maximum and minimum range to the target. A breakaway symbol appears on the HUD at the appropriate time. Figures 10 and 11 show the HUD during a short range missile and gun attack.

The boresight, HUD auto, and LCOS modes are not applicable to HMS or HMD because of the fixed aircraft frame of reference which is basic to these modes. The HMS mode is a selected application as opposed to a potential application. This application of the HMS for air-to-air target acquisition is specifically for extended off-boresight target acquisition. In effect, the HMS more than doubles the acquisition envelope provided by the field of view of the HUD. An effectiveness analysis which analyzed how the HMS could enhance F-15 weapon system effectiveness by providing off-boresight designation capability in close quarters air-to-air combat is contained in the Confidential supplement to this report.

It is inappropriate to consider using the HMD in place of the HUD to display aircraft steering and launch firing information. Even if the HMD could be used for the attack steering, it makes no sense to switch from the HUD to a HMD in the middle of the task sequence. The converse, however, is not true. In the F-15 HMS acquisition mode, the HUD is used to display the steering and launch data. The F-15 HMS mode provides for the capability to complete a missile attack using only the HMS for the case where the target is within the launch zone at the time of acquisition. A small light in the sight illuminates when this situation exists. A combined HMS/HMD could conceivably be used for the F-15 HMS acquisition and attack sequence (the sight for acquisition and the HMD to present attack steering information). The advantage of a combined HMS/HMD is that if the radar lock is broken it could be quickly reestablished with the HMS.

Air-to-Ground Weapon Delivery

The F-15 avionics subsystem model used provides visual and radar (blind) delivery of standard air-to-ground weapons (bombs, dispenser munitions, gun, rockets, etc.), and delivery of TV guided

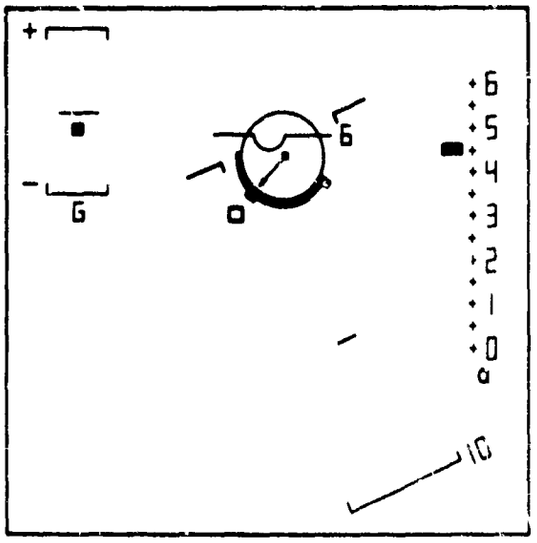

Figure 10. HUD During Missile Attack

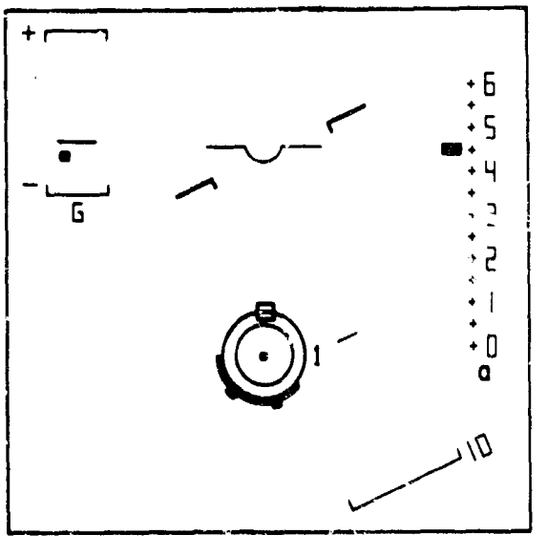

Figure 11. HUD During Gun Attack

electro-optical weapons (Walleye and Maverick). Five basic air-to-ground modes are provided depending on the target, weapon desired, and environmental conditions. A manual backup depressed reticle is also available.

Visual Continuously Computed Impact Point (CCIP). The Visual Continuously Computed Impact Point (CCIP) mode uses the radar for ranging on the ground area within the CCIP HUD reticle, the inertial platform for velocity measurements, and the central computer for computing the CCIP position based on the weapons selected, velocity, etc. The CCIP mode is applicable for all gravity weapons and for guns and rockets. The pilot steers the aircraft in heading and dive angle to position the CCIP reticle over the target. A picture of the HUD elements in this mode is shown in Figure 12. The reticle indicates the point the weapon would impact if released at that particular instant. Also shown on the HUD are the aircraft velocity vector, an artificial horizon, predicted bomb impact line (PIL), slant range to CCIP, and breakaway symbol. The pilot releases the weapon manually by depressing the weapon release button on the flight stick.

Visual Aided Weapon Delivery. The Visual Aided mode is used if the CCIP is off the field of view of the HUD as for a high drag weapon or for visual IP delivery. Control logic is modified for this mode from the CCIP mode by the pilot calling up a designation cursor on the HUD. The pilot places the cursor over the target and depresses a lockon button. A steering reticle now appears at the same elevation as the cursor and the pilot flies the aircraft to keep the steering reticle and cursor (target) superimposed. Weapon release is automatic. The

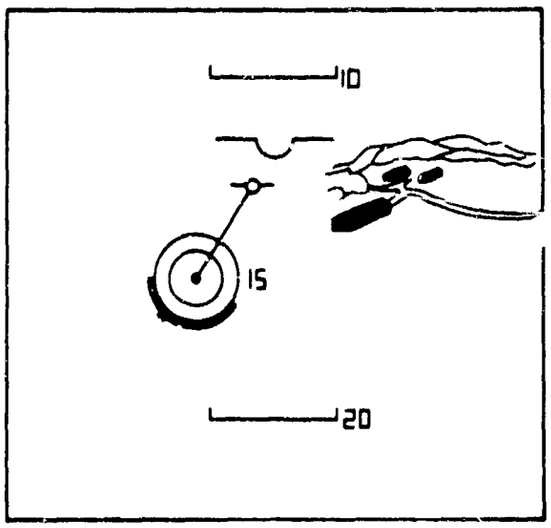

Figure 12. HUD, Air-to-Ground CCIP

pilot can redesignate the target should the cursor drift off the target. The aircraft altitude, speed, and attitude are not limited except by conditions imposed by safety. The aircraft may be pulled up or maneuvered before and after designation.

Manual Visual Weapon Delivery. A manual visual delivery mode is provided to permit noncomputed weapon delivery in case either the central computer or the HUD CRT display is inoperative. The pilot turns on the standby HUD reticle, depresses it to the desired angle, establishes a desired delivery flight condition (speed and dive angle), lines the target up with depressed reticle, and releases (or fires) based on pressure altitude.

A combined HMS/HMD could be used in place of the HUD to effect the visual CCIP and aided air-to-ground weapon delivery modes. It is questionable whether the HMS/HMD offers any significant advantage over a HUD, and there is the unanswered question of how well the performance of a HMS/HMD would compare with the proven HUD approach. Possible advantages of the HMS/HMD approach are the ability to acquire the target outside the HUD field of view when navigation error results in significant deviations from the planned flight path and the ability to use visual offset points when the target cannot be found. A HMS or HMD has no application for the manual visual mode since a fixed depressible reticle referenced to the aircraft ADL is required.

Radar Blind Bombing Weapon Delivery. An all-weather blind bombing mode is provided by utilizing the attack radar in a forward sector ground map mode. The pilot selects this mode which causes the VSD to present a sector scan radar ground map as shown in Figure 13 and sets up appropriate signal routing and computation. When the pilot recognizes the target on the radar map, he calls up the VSD cursor and places the cursor over the target. On command, an expanded radar map appears on the VSD. The pilot redesignates the target on the expanded scale radar map and initiates lockon. This causes the radar to point to the designated point on the ground. Heading error, target designator, horizon tabs, and bomb release line are shown on the VSD. Heading error is also shown on the HUD. The pilot flies the aircraft to null out heading errors and, at the appropriate time, depresses and holds the weapon release initiate button on the flight stick until automatic weapon release occurs. A breakaway symbol appears on the HUD.

The HMD could be used in place of the VSD to display the radar ground map and steering information. As was the case with the radar navigation update, the advantage of this is that the pilot could maintain a head-up orientation while performing the radar bomb delivery, whereas the VSD requires the pilot to assume a head-down position for an extended time period. Use of the HMD for a radar ground map display is a potential application, but not a greatly advantageous one.

Figure 13. VSD Radar Ground Map

Electro-Optical Weapon Delivery. Both Walleye and Maverick attacks are included in the F-15 avionics armament inventory. Selection of the Walleye or Maverick modes activates the missile TV camera for display of a TV ground map on the VSD and enables a caged reticle on the HUD. The pilot maneuvers the aircraft to place the target in the HUD reticle and observes the TV video on the VSD to recognize the target

The combined HMS/HMD may provide a significant performance improvement for electro-optical weapon delivery, particularly the Maverick. In Walleye weapon delivery, the pilot must recognize the target through the canopy and then maneuver the aircraft so that the TV sensor on the missile is pointed at the target. He must then recognize the target on the TV video. Maverick operates similarly except the missile TV sensor is slewed via a hand control rather than maneuvering the aircraft. In both instances, the pilot must go from a head-up to a head-down position which may occur several times until he finds the target on the TV display. This is compounded by a fairly severe time limitation imposed by the visual target recognition range and aircraft speed. By using a combined HMS/HMD for the visual and TV video presentations, the pilot does not have to look back and forth between the HUD and the VSD. This should reduce operator task time and reduce the probability of not finding the target on the TV video. Although both Walleye and Maverick represent potential applications of a combined HMS/HMD, the Maverick is better suited because use of the HMS/HMD is largely independent of aircraft control and the powered Maverick missile allows for offset attack using the

HMS/HMD as a pointing/acquisition technique. Electro-optical weapon delivery, therefore, appears to be a significant application of a combined HMS/HMD.

Threat Homing and Warning

Threat Homing and Warning System (THWS) display is provided in the representative system for the purpose of warning the pilot of the range, azimuth, elevation, and type of threats.

Since the size of the THWS CRT is not critical from an information display standpoint, the unit was optimized to best fit the cockpit installation constraints.

In the design, the THWS display is located to the right and approximately midway between the HUD and VSD. Normally, the pilot will not monitor the THWS display unless a visual warning via ALERT and LAUNCH plaques on the HUD panel and/or an aural warning through the headset directs his attention to it.

The HMD could be used to display both the warning and the THWS situation information. The major advantage gained by this approach is that the THWS information would always be in the operator's field of view regardless of what the pilot may be doing or where he is looking. A second benefit is that a panel mounted display could be deleted to provide additional panel space as well as cost and weight savings.

An application closely related to THWS is tail warning. The HMD provides a convenient display by which a rear mounted TV camera could supply a view behind the aircraft, e.g., 6 o'clock low, to prevent surprise tail attacks.

ILS Approach and Landing

The HUD is the primary display used for aircraft landing in either VFR or IFR conditions. When the pilot has selected the ILS mode, the HUD displays localizer and glideslope scales and commands, pitch and roll commands, KIAS, low scale altitude, heading, and pitch angle. A combined HMS/HMD could be used to display the same information as the HUD. However, there does not appear to be any significant advantage in such an application over the HUD or direct vision. A potential application for aircraft landing, not part of the F-15 system, is a display of low light level TV on a HMD to accomplish landings on unmarked airfields at night.

Applications Summary

A summary of the applications based on a model F-15 configuration is provided in Table VII. The dominant display quality requirements needed to satisfy these applications are shown in Table VIII.

Table VII. Applications Summary

Mission Segment	Helmet device		
	Display	Sight	Combination
Take-off	0	0	0
Cruise	1 (Reference Material)	0	0
ILS and Land	1 (If Pattern Sensor Used)	0	1
Nav. Update			
Visual Flyover	1 (Reference Material)	0	0
Visual HUD	0	2	0
Radar	1	0	2
B-Scan Search/Attack	1	0	1
TV Identification	2	0	2
Visual Air Search/ Acquisition			
Boresight	0	0	0
HUD/Auto	0	0	0
LCOS	0	0	0
HMS	0	2	0
Air-to-Ground Attack			
CCIP	0	1	1
Visual Aided	0	1	1
Manual	0	0	0
Radar	1	0	2
Maverick	1	0	2
Walleye	1	0	2
THWS	2	0	1

Key: 0 = No application, 1 = Potential application,
2 = Recommended application

Table VIII. F-15 Display Requirements

Parameter	THWS	TV Ident.	A/G Electro-optical	Radar A/G
Resolution (TV Lines Per Diameter)	450	850	450	512
Shades of Gray	2	10	10	8
Frame Rate (Hertz)	60	30	30	30
Apparent Display Size (inches) at 25 inch viewing distance	3	10	5	5

ONE-MAN, TWO-MAN AIRCRAFT CREW CONSIDERATIONS

In the preceding mission analysis, critical tasks which could make use of the HMD/HMS were identified, and HMD/HMS display requirements were developed for the tasks identified. These analyses have made no assumptions about crew size, viz., one or two men.

A study which would be desirable to conduct is the comparison of one man versus two men with and without the HMD/HMS. The central question of interest is as follows: If one man cannot meet F-15 performance requirements because of task-time loading whereas two men can, would the addition of the HMD/HMS reduce task-time loading to the extent that one man could meet the performance requirements? To adequately answer this question requires a detailed and exact task-time line workload analysis. Unfortunately, such a study is beyond the scope of this contract. There is also a lack of time data for which to base such a study. If a definitive study of this nature is required for evaluation of HMD/HMS, part-task simulation of selected mission segments will be required to obtain the data.

Although it is not possible to conduct a one-man, two-man HMD/HMS study at this time, there have been some recent crew size studies conducted in support of the Navy Multimission Fighter/Attack Aircraft concept and the proposed Air Force F-15 air superiority aircraft which may provide some partial answers. These are described in the classified supplement to this report.

SECTION IV

HELMET MOUNTED DISPLAY

INTRODUCTION

A brief survey of the human factors literature relevant to helmet mounted displays is presented, and considerations of perceptual phenomena encountered with such displays and the visual mechanisms underlying these phenomena are discussed. A discussion of some relevant experience with display magnification and display-control compatibility is also included. The literature survey is followed by a discussion of laboratory and flight test evaluations of helmet mounted displays.

Most of the laboratory and flight test evaluation was devoted to obtaining subjective impressions of perceptual effects and evaluating displayed image quality. During the laboratory study, a wide range of sensor imagery was examined. The types included were radar, electro-optical, and symbolic imagery.

The available displays were also flight tested to give an estimate of the feasibility of such displays at an operational level, to identify problem areas, and to evaluate the various configurations.

SURVEY OF HUMAN FACTORS DATA ASSOCIATED WITH HELMET MOUNTED DISPLAYS

Binocular Rivalry

A HMD can result in different images being presented to each eye. In this case, fusion of the two images cannot occur because of binocular rivalry. The problem of binocular rivalry has long interested experimental psychologists and has been subject to renewed interest over the last several years. Much of this work has been concerned with the study of simple visual fields. Rivalry between very complex visual fields has not been studied. Some general rules, however, can be stated from the literature as follows:

1. Rivalry may be a complete alternation of the two visual fields or a mosaic consisting of parts of both fields which varies. Usually in the latter case, one field will tend to dominate.

2. The field with higher contrast will dominate during rivalry, i.e., suppression of that field will be for shorter time periods than will be suppression of the less contrasted field.

PRECEDING PAGE BLANK

3. A field with the greater contour density will be the dominant field.

4. The brighter field will dominate over the less bright.

5. Rate of alternation tends to increase as the difference in size of items in the two fields increases.

6. Alternation is not under complete voluntary control.

7. Time on task reduces the alternation rate.

Several theories exist that attempt to account for the phenomenon of rivalry. Helmholtz in 1886 suggested an attention theory where he considered that competition took place in central processes. There are two perceptions, and attention determines which one will come to awareness. This theory tends to be circular, as what determines attention can only be empirically determined. An alternative theory is that of Hering in 1864 who considered that the binocular impression arises from a mixture of monocular excitations, where the excitations from corresponding areas are not summative. In other words, each retina makes a contribution, but the amount depends on the nature of the image. In Hering's view, contours always dominate, and this is the hard core of his rivalry explanation. This theory does not depend on experimental factors or the mental set of the observer. Another theory, based on the Gestalt school, suggested that the important factor was that a figure is either perceived entirely or not at all, and that this requirement leads to competition.

More recently, Levelt (1965) has discussed these theories in detail, and has presented an alternative theory which considers that rivalry is a result of conflict between two visual mechanisms, namely binocular brightness averaging which operates so as to average out the brightness for corresponding points of the two eyes, and the second is a contour mechanism which acts so as to leave the area in the vicinity of a distinct contour unimpaired. This means that for the particular situation where symbolic information is presented to one eye, and a textured field (such as a ground map) to the other, the textured field is going to be particularly degraded at the contours of the symbolic information. This may be undesirable if the symbolic display is being used to mark a location or to track a point on the textured field.

One property of the binocular rivalry situation is that the operator's reaction time to a critical signal in the suppressed eye will be slowed (Fox and Check, 1968). This reduced responsiveness of the suppressed eye is further demonstrated by the fact that no pupillary reflex is found when an inhibited eye is stimulated by a flash during binocular rivalry (Bokander, 1967).

Image Superimposition

In the case of a see-through HMD, two different fields are superimposed and presented to one eye. The possibilty exists that there will be confusion between the field the pilot wishes to see and the remaining field. Although the see-through case is similar in this regard to Head Up Displays (HUD), the HMD differs in that display brightness is lower than that obtained in a HUD. Furthermore, a HUD usually indicates only symbolic information; whereas an HMD may present literal sensor information such as ground map radar.

There is not a great deal of information relating to the effect of superimposition of different images. Hall and Miller (1963) carried out a series of pilot studies to examine the operator's limitations with respect to this problem. The experimental design was such that the observer was presented with a monocular virtual image of various slow moving targets which appeared at preselected random positions across the visual field. These targets were seen by the observer, with one eye, via a reflecting eyepiece. They appeared to be superimposed on different static backgrounds at a distance of 10 feet. The speed of the targets was 8.76 degrees per second, and the exposure time was 0.28 sec. The other eye also was open and was able to see the background scene but not the targets. The task of the observer was to detect and identify the targets, which had high enough contrast so that they could be distinguished easily from the background. The subjects also were asked questions concerning the contents of the background scene to ensure that they actually were paying attention to it as well as to the targets.

The results showed that subjects were able to detect and identify a very high proportion of the targets, as well as observe details in the static background.

In that experiment, the bulk of the information presented to the observer was seen by both eyes. The observer was not shown a highly detailed additional image for the target. Thus, the circumstances used were not ones that would produce retinal rivalry as the images to each eye were so disparate that fusion could not take place. However, the study does show that superimposition of images can yield good information to the observer from both display sources. This is not to say that they were actually seeing two fields simultaneously. Rather, they were able to divide their attention efficiently between the two sets of information. Further experimentation with a similar experimental procedure indicated that no fatigue effects occurred when the subject was instructed to pay attention to a film presentation and to identify a pattern of dots over a period of several hours.

Because the display is head mounted, with see-through optics, the image moves through the surrounding environment as the observer moves his head. As a result, the displayed information should be seen as distinct and separate from the surrounding environment due to relative image movement. When display surfaces are superimposed, a number of optical conditions can affect how these surfaces are perceived. Some variables of interest are the following:

1. Relative brightness between the two surfaces

2. Relative focus between the two surfaces

3. Relative motion between the two surfaces

4. Distribution and shape of the elements comprising the two surfaces.

Carel (1961) found that the two most important cues in separating the displayed images were relative brightness and relative focus. He also found that motion helped separate the two systems into unified wholes, while element size did not.

Generally, figure-ground confusion effects between the two fields is not very marked if a random visual pattern is superimposed over a structured image. Man is relatively impervious to the effects of such visual noise (Roberts, 1962). On the other hand, contoured visual noise is more objectionable than random noise to the human observer (for example, quantization noise). The possibility then exists that superimposition of images in a combining glass system might lead to degradation of performance. In some respects, this situation parallels the auditory binaural listening situation studied extensively by psychologists interested in the selective attention abilities of the human. Unfortunately, this general interest has not included the visual modality.

Biocular HMD (Image Alignment)

In Biocular presentation of HMD information, the displays must be aligned so that the operator can fuse both images into a single picture. But it is not necessary for two displays to be perfectly aligned in order to fuse the two images. A small amount of discrepancy can be tolerated. This defines the so-called fusional areas of Panum areas. The angular extent of these areas in both the horizontal and vertical direction has been measured, and it has been found that the Panum area is smaller in the fovea than in the periphery of the eye. Ogle (1950) found horizontal foveal fusional areas of 6-8 min of arc. Levelt (1965) suggests, that the fusion of parallel contours within Panum's area may be understood as the inhibition of the contour presented to one eye by that presented to the other.

Display Magnification

When the display is presenting a sensor imagery instead of a direct view of the real world, the question of display magnification is raised. Data relevant to the effect of display magnification was gathered during a study of flight by periscope. It is relevant to the HMD in that field of view (FOV) is limited, and the display is the only source of outside visibility. Roscoe et al (1966) investigated the use of periscope displays in making takeoffs and landings with variable image magnification. Three different magnifications were studied: 0.86, 1.20, and 2.00. The results showed magnification affected the constant errors of pilots in point of touchdown. The mean point of touchdown for periscope landings was an inverse linear function of image magnification. Variable errors in point of touchdown were also affected. The smallest errors occurred when the image magnification was such that objects appeared the same distance away as they would when viewed with unrestricted contact visibility. The optimum image magnification was found to be 1.20 for the particular periscope used, but the authors cautioned that this would not necessarily be the value of any other type of periscope. It was found that magnification less than 1.0 distorts the view of the outside world in ways that may seriously affect the safety and the accuracy of a pilot's performance of ground referenced maneuvers. Angular distances from the center-line of the periscope appear too short, and linear distances in the horizontal plane appear too long. These illusions apparently affected the landings made by pilots in a number of potentially serious ways.

A reason for an optimum magnification of just over unity may be contained in the observations of Imber, Stern, and Vanderplas (1954) who found with restricted FOV devices an apparent minification for objects at larger distances.

Frame of Reference

The interpretability of HMD displayed information when the pilot has his head turned to the left or right is a major potential problem. This question relates to the possibility of interpreting and responding to a roll error as though it were a pitch deviation.

In an effort to answer this question, Bell Helicopter Company, under a joint Army-Navy contract in 1962, performed a minimum effort simulation and evaluation study.

In the Bell study, subjects were instructed to control the attitude and heading of a helicopter so as to maintain a hovering position relative to information presented on a contact analog display. The display consisted of a 1-inch CRT mounted face down on a standard military helmet. A mirror was mounted at a 45-degree angle in front of the right eye and just below the face of the CRT

Following the completion of pre-test training, five subjects were given seven sessions of 12, 2-minute trials. Three viewing conditions were evaluated. These were as follows:

1. A forward-looking view in which the subject's head was clamped in a forward-looking position and coincided with the field of view presented in the display,

2. A condition in which the subject's head was clamped in a position 50 degrees to the left of the median plane with a forward-looking view presented in the display, and

3. A condition in which the head was clamped in a position 50 degrees to the right of the median plane with a forward-looking view presented in the display.

   Following completion of the seven experimental sessions, the subjects were given eight 2-minute trials on a condition in which the head clamp was removed, and they were free to move their heads both to the left and the right.

The results indicated that pre-test performance on a panel-mounted contact analog display was far superior to that exhibited on the helmet-mounted display. This was to be expected because the panel mounted display was near optimum in terms of resolution, clarity, comfort, and subject experience. Such was not the case with head mounted display. Although the subjects performance deteriorated when using the head-mounted display, the deterioration appeared to be distributed across the three head-position conditions and was not restricted to any particular orientation. As determined by the Walsh test of significance, none of the performance differences between left and right head position were significant when compared with the condition in which the forward-looking display view coincided with the orientation of the head.

Campbell et al (1955) installed a periscope device with a hand-operated direction-pointing control in the nose of a B-17 aircraft. Pilots were required to perform straight-level flying, turns, climbs, descents, patterns, final approaches, and landings. Varying orientation of the display during flight caused difficulty of aircraft control. This suggests that a restricted field of view display which does not display the direct forward position can result in marked spatial disorientation.

Kibort and Drinkwater (1964) in a flight study of landings using panel mounted television displays found that some confusion could arise from placement of the TV sensor. This occurred when the spatial movement relationships between the camera and that normally experienced by the pilot did not correspond.

DISPLAY DEVICES USED IN EXPERIMENTATION

Occluded Display

Five different occluded HMD optical systems were evaluated in the laboratory. These are shown in Figures 14, 15, and 16. The display system is shown mounted on a flight helmet in Figure 17. These display systems were developed in conjunction with previous programs.

The optical system works as follows. A primary image of the face of the CRT is formed near the eyepiece via a relay lens system. The eyepiece (eye lens and field lens) produces a virtual image at the proper diameter for the eye. First surface mirrors fold the optical system into the desired geometry. The aperture stop located between the relay lenses determines the exit pupil diameter (approximately 4 mm for all occluded optics). The eye relief is somewhat affected by the position of the aperture stop. The stop position was primarily chosen for best optical performance (minimum aberration conditions). A field flattener lens is utilized over the face of the CRT to compensate for the field curvature inherent in the relay systems.

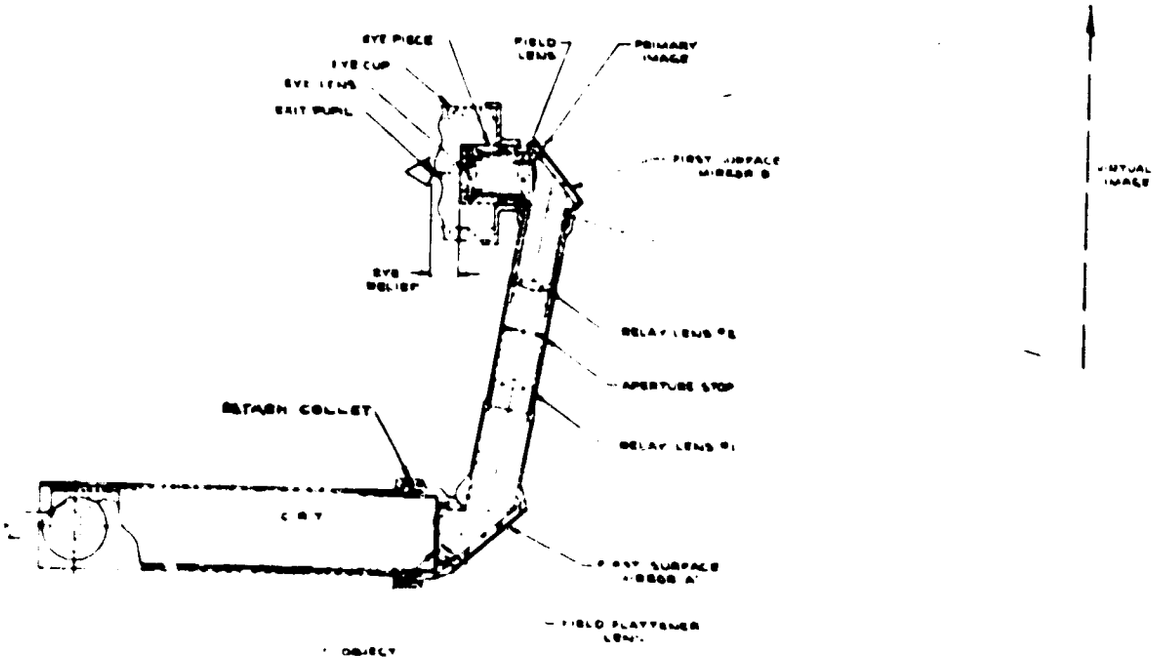

Figure 14. Optical Layout of an Occluded HMD

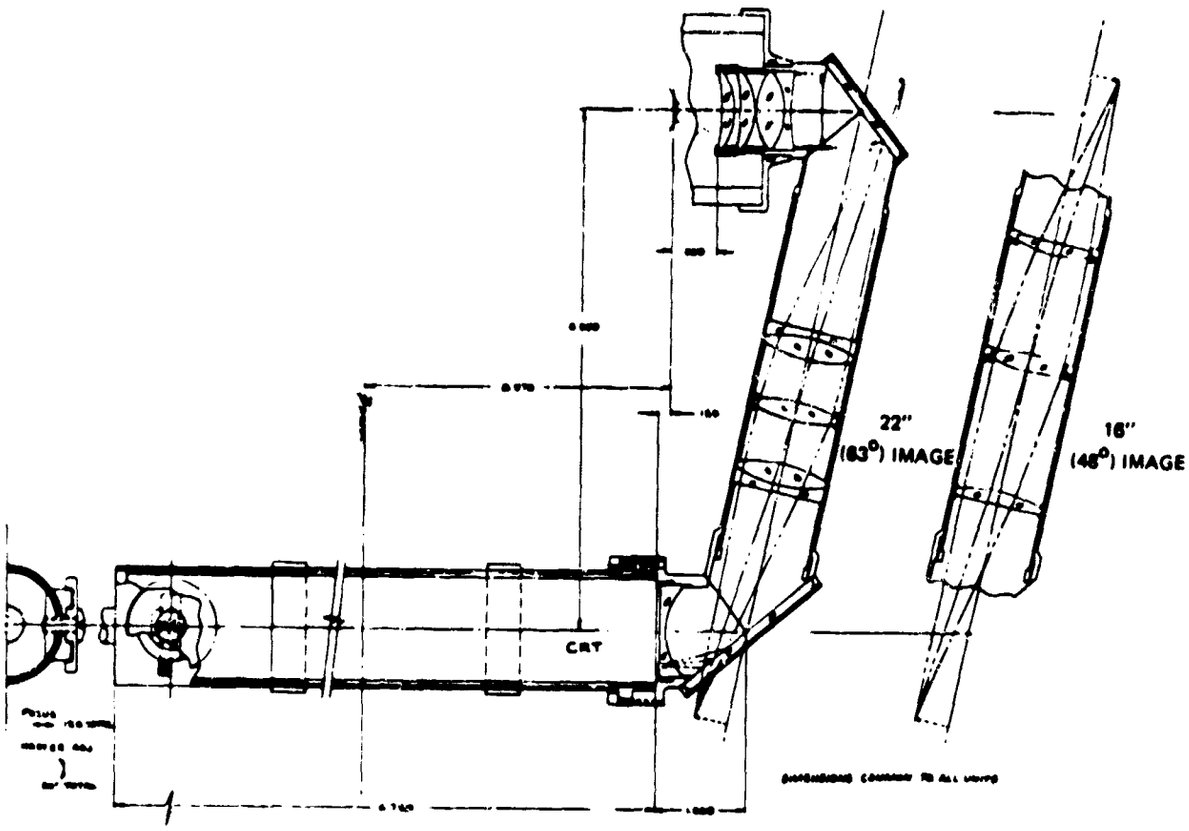

Figure 15. Overall Layout with Optical Details for 63° and 48° Visual Subtense Displays

Weight Analysis. Calculations and actual weighings indicate the following:

	Weight (ounces)
Latch Assembly (Shown in Figure 41)	3.50
CRT and Tube Assembly	7.13
Alternative Optical Tube Assemblies	
Visual Subtense	
63°	3.77
48°	3.38
34°	2.70
28°	2.70
19°	2.44

Total HMD weight only varies from 14.40 to 13.07 ounces.

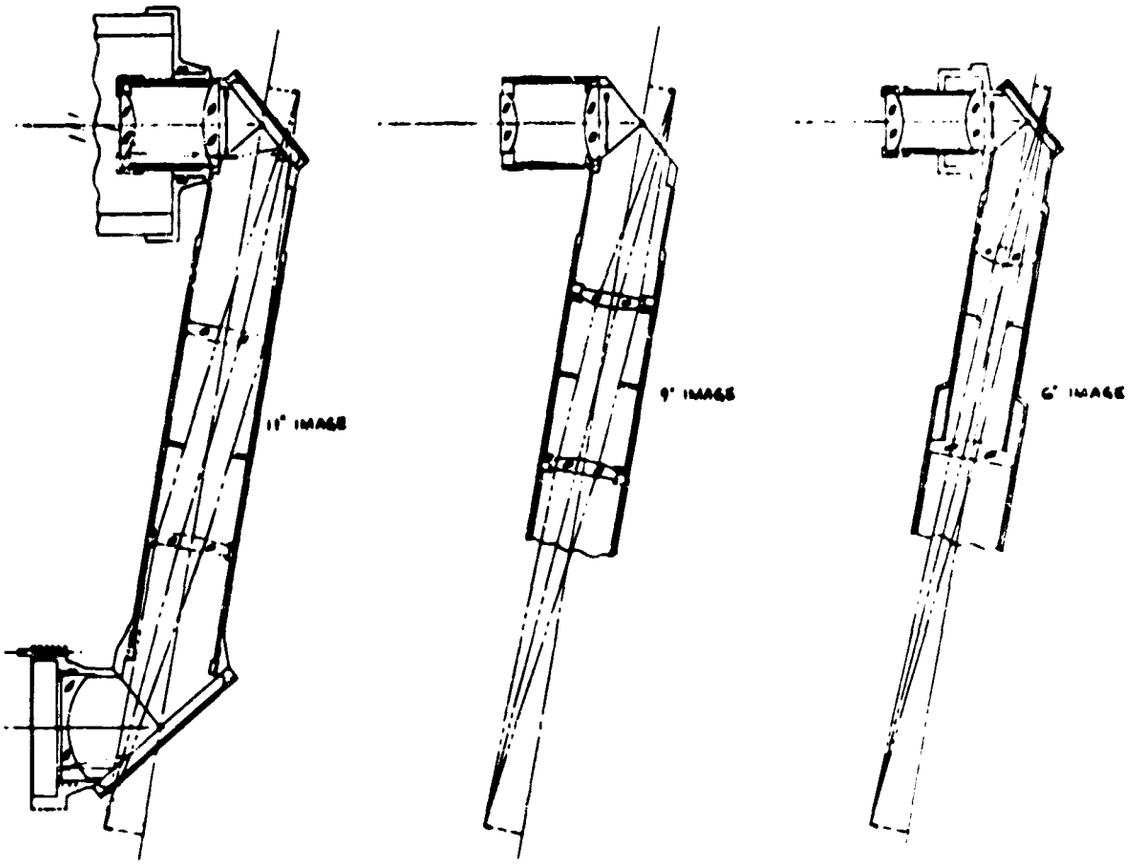

Figure 16. Overall Layout with Optical Details for 34°, 28° and 19° Visual Subtense

See-Through Display

A see-through display is shown in Figure 18. Only a single system of this type was available. It is simple in design, consisting of two reflecting surfaces separated by a compound lens system.

Figure 17. Occluded Display System Shown Mounted on a Flight Helmet

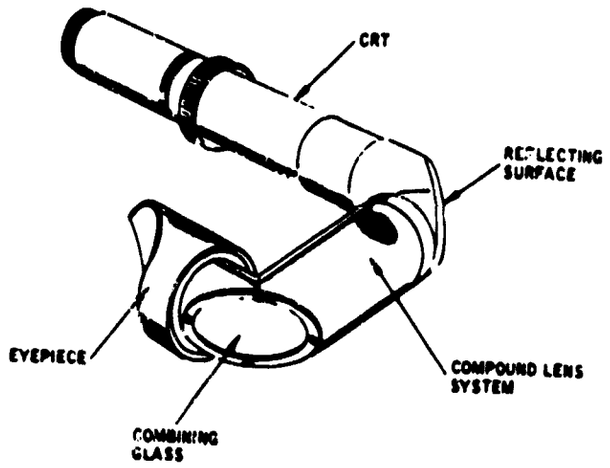

Figure 18. See-Through HMD Configuration

The FOV of the external environment available to the viewer as seen through the combining glass is 39°. The CRT image of the HMD only fills the center of the combining glass with a visual subtense of 20°, as shown in Figure 19.

LABORATORY EVALUATION OF HMD

The purpose of the laboratory study was to provide an understanding of the perceptual phenomena associated with the use of an HMD and to evaluate selected display parameters. It should be pointed out that these results and conclusions may be dependent in part on the display-camera electronics system used for the study, particularly image quality factors. Much of the laboratory and flight evaluation reported here was carried out with Hughes Aircraft Company funds. This in-house work supported the development of HMD equipment used in the studies.

Both pictorial ground map and target test patterns were used in the laboratory evaluation. The images were obtained via a Fairchild TV Camera TCS-950 equipped with a high quality vidicon, 525 line raster, 2:1 interlace, and a 13° camera FOV. The external environment was either an untextured uniform white field or a structured pictorial scene. The brightness of these external fields was varied by changing the ambient light falling on the scenes. The highlight brightness for the CRT face was approximately 50 foot lamberts when the picture was adjusted for optimum quality.

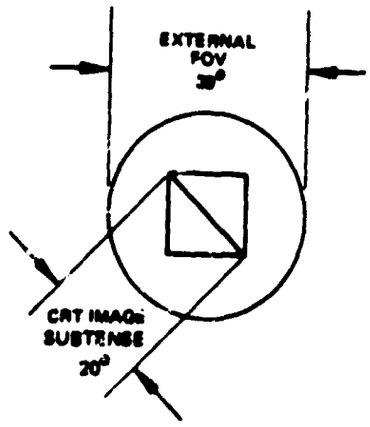

Figure 19. View at
See-Through
Eyepiece

Occluded Display

The optical efficiency [illegible] HMD occluded optics was found to be approximately 40 percent [illegible] each display subtense optics. The highlight brightness of the image at the eyepiece was optimized at 20 foot lamberts.

The degradation of the HMD pictorial image was negligible over the range of external brightness generated in the laboratory, that is, up to 2400 foot lamberts. It was observed that when viewing significantly higher brightnesses (external daylight) the pictorial scene tends to be "washed out" and the contrast appears to be reduced. The important point is that the effect is not significant until very high external field brightnesses are used. These data approximate those of previous investigations in which the thresholds in one eye were found to be dependent upon stimulation of the other eye. Crawford (1940) found little binocular interaction. Bouman (1955) extended this work and showed that absolute and incremental thresholds for vision in one eye are independent of contralateral stimulation when this is measured during periods of dominance of the eye under concern. The impression obtained in the laboratory indicated the same result; very little interaction occurred. However, some rivalry effects were found, and there was at times a marked latency before a judgment could be made. Another relevant experimental factor involved in this situation is the fact that ambient light can stimulate the occluded eye even if there is no light leakage in the eyepiece. There can be internal light transmission in the head which can visually influence the eye. This

can be easily demonstrated by switching on and off a small flashlight shone inside one's mouth while in a semi-darkened room. Stimulation from ambient light in the unoccluded eye and on the observer's face may influence the judgments made by the occluded eye, because of change in the dark adaptation level of the occluded eye.

In a structured external field, interaction between the two different images becomes more marked, and the HMD information is apparently degraded. Nevertheless, usable information still is available in the HMD until quite high external environment brightnesses (2000 foot lamberts) are reached. It takes longer for a percept of the HMD to form completely. Classical binocular rivalry of either one or the other image completely dominating the visual field was not found. With symbolic information displayed in the HMD without the gray shades required for a literal display, the degradation of the HMD due to rivalry would be much less.

A Retma Resolution chart was presented via the HMD and the brightness of the external environment was varied. It was concluded that the number of gray shades that can be seen by the occluded eye is only slightly affected by ambient brightness presented to the other eye. The slight degradation occurred when a structured background was used. No degradation was measured when a plain background was used. A slight decrease in the number of gray shades that can be seen occurs with textured backgrounds brighter than about 1000 foot lamberts.

Movement of the head so that the unoccluded eye scans across a structured field interferes significantly with perception of the HMD image, particularly with high brightness external scenes.

See-through Display

Two sets of combining glass optics were used to evaluate the visibility of see-through displays. These are referred to as low and high transmission combining glasses, respectively. The "high transmission" glass reflects 22 percent of the CRT light to the display eyepiece, and 44 percent of the external brightness reaches the eye. The "low transmission" combining glass yields 56 percent reflection, and 15 percent of the external ambient is transmitted to the eye. In the overall optics system (from CRT to eye), the high transmission glass has an efficiency of 11.2 percent and the low transmission case an efficiency of 37.4 percent.

High Transmission Combining Glass. The best HMD picture quality is achieved when the tube highlight image brightness is approximately 50 ft. lamberts after passage through the HMD optics. With moderate background brightness (200 ft. lamberts), the CRT display tends to wash-out. At higher ambient intensities, the CRT display cannot even be detected despite the distinctive green color of the P-1 phosphor. When the HMD presentation is visible, it appears that the

observer can select either the external or CRT displayed scene for attention and experiences little, if any, difficulty in alternating his selection. When he directs attention to one scene, it dominates the field of view. When he switches to the other, the first scene retreats and the second comes into view. This action is voluntary and in this respect is different from the somewhat uncontrolled switching of retinal or binocular rivalry. This switching is not possible, however, if the two scenes differ greatly in brightness. Subjectively, switching occurs by concentrating upon features of a scene. In some respects, this is the visual analog of the well known cocktail party effect in audition (after Cherry, 1954). It suggests even in a stronger way the active process of perceptual construction an observer uses to develop a percept. He uses his prior information of what is being viewed and the properties of the scene's structural unity.

The switching between scenes may be facilitated by the different spectral composition of the two scenes (the green P-1 phosphor contrasted with the outside scene). In auditory selective listening experiments, differences in auditory characteristics are known to facilitate switching listening back and forth between two channels (Broadbend, 1958). If the spectral composition is indeed a significant factor in facilitating perceptual separation of the scenes, the introduction of dichroic combining glass systems which reflect and transmit different spectral regions might also augment the ease of switching between scenes.

Movement of the scenes relative to each other resulting from rapid head movements tends to hamper observation of either scene. Slow relative movement, however, does not cause significant interference.

Low Transmission Combining Glass. With this combining glass, the best HMD picture quality of pictorial textured images is also achieved when the tube highlight brightness at the eyepiece is approximately 50 ft. lamberts. This approach produces a picture superior in quality to the high transmission combining glass. The low transmission combining glass can be considered to be quite usable for external ambient conditions less than 80 ft. lamberts (conditions at dusk).

With the high transmission glass, the number of gray shades that can be seen initially with dark background (namely 10) decreases steadily as the external brightness increases until they become washed out at about 1000-Ft. lamberts ambient. This applies to both plain and textured backgrounds. Resolution was not significantly degraded until the picture begins to be washed-out around 1000 ft. lamberts.

Further examination with neutral density filters indicated that for daytime use (approximately 4000 foot lamberts), the maximum acceptable filter transmission in the see-through optics is 1 percent.

Visual Subtense

In the occluded display, several sets of optics were available to provide different visual subtenses. There were four different sets available: 19°, 34°, 48° and 63°.

The smaller visual subtense devices form the image at a greater distance from the eye and yield an annular illumination from internal reflections off the CRT around the image. This spurious light presents no information and tends to be distracting. This applies to the 19° optics, particularly.

When a smaller display image was presented in the occluded display, local high brightness areas in the external field produced interference which reduced the detail.

As image size increases, the effect of these bright areas on the HMD quality does not tend to be as marked. This is because less detail is being obscured (as the detail per unit area on the displayed image is reduced). On the other hand, as image size increases, it tends to interfere more with the external field. It was the impression of the observer that the overall feeling of rivalry is more marked and distracting when the fields of view of both eyes are of the same extent. Also, with larger visual subtense optics, the raster lines of the CRT will tend to be quite prominent.

Rivalry appears to be greater when both eyes are accommodated to the same distance. This accommodation may also have played a part in switching from scene to scene in the see-through display.

Comments on Optics Exit Pupil for the Occluded Display

Based on the laboratory observations, the impression is that the 63° display has too small an exit pupil (4 mm) for the display size, and its raster line array is too prominent. The most pleasing display appeared to be the 34° display. Although the 34° display produced an annular ring of light around the display, owing to internal reflection in the optical system, it was not as pronounced or as distracting as with the 19° display. With all of the displays, the exit pupil tended to be too small, and even the 19° visual subtense optics was subject to interference from movements of the eyepiece relative to the eye. An important quality of satisfactory display optics is a large enough exit pupil, which has to be matched to the visual subtense being used.

The exit pupil of the see-through optics (10 mm) was such that no interference was found with the display during laboratory evaluation due to movements of the device relative to the eye.

Laboratory Viewing of Typical Display Imagery

Imagery was obtained from equipment already developed at Hughes. A video tape was prepared with a number of radar display modes by interfacing a Sony PV-120V tape recorder driven by a Shibaden HV-50V camera with imagery from the laboratory digital scan converter. Radar imagery from Philadelphia and the Delaware River (including return from urban complex areas as well as areas of low return) was obtained for Plan Position Indicator (PPI), Passing Scene, and Snapshot modes. Air-to-Air target imagery was included for the B-Scan mode. Typical F-15 HUD symbology and VSD imagery were also recorded on the tape.

An additional tape was obtained of Holloman AFB Maverick Test Imagery with diverse targets including tactical ground targets, factory complexes, and air-to-air targets of T-33 and F-106 aircraft. A detailed list of these targets is provided in Table IX.

These recordings were viewed both with the various HMD configurations and in a standard TV monitor in order to make estimates and comparisons of image quality. When viewing the occluded HMD, the image quality was generally preserved quite well, and the quality was not markedly inferior to that obtained with the TV monitor. Good detail in the radar pictures was usually discriminable, and there was essentially no picture degradation for high contrast pictures, such as display of symbology. Targets were discriminable from a longer range with the standard TV monitor, but the differences were not very great. Airborne targets on the Holloman tape against a low detail background appeared to possess good quality.

When viewing the occluded display with the left eye open to outside view, or viewing through the see-through display, degradations in the visibility of some of this imagery was found. The displays most affected were those with fine detail, such as the ground map radar and photographic targets with high detail. Subjectively, with the occluded display, a competition between a textured field to the open eye and detailed information in the HMD interfered significantly with the ability to extract fine information from the display. This was not observed with symbolic information presented on the HMD or with low detail photographic targets. The same generalizations can be made for the see-through cases. Switching between the HMD scene and the external environment was easily performed as described previously in the laboratory experiments. The high detail fields were most affected by isolated high brightness areas.

FLIGHT TEST EVALUATION OF THE HMD

Introduction

Evaluation in flight was intended to expand the experience gained in the laboratory evaluation. The applications of interest for

Table IX. Holloman Test Target Tape Details

Reference AFMDC/Holloman Recorded on Sony PV-120U, S/N 1019, G-005712			
Counter Start	Number Stop	Holloman Target No.	Subject
0	55	LT3-8H	Barrels (blk)
55	96	LT3-24H	Bridge (wht)
96	164	LT3-26H	Ore Carrier (wht)
164	222	LT3-32H	Chicken House (wht)
222	270	LT3-39H	Factory (wht) (blk)
270	328	LT3-41H	B-47 (blk)
328	352	LT3-53H	Truck Hor. (blk)
352	364	LT5-57H	Truck Vert. (blk)
364	394	LT5-67H	VC House (wht) (blk)
394	410	None	Indian Head Pattern (Res. Test Pattern)
410	424	3A	T-33 Air/Air
424	441	4A	T-33 Air/Air
441	482	5A	T-33 Air/Air
482	510	42A	F-106 Air/Air
510	560	44A	F-106 Air/Air
560	600	47A	F-106 Air/Air
600	610	115C	Dam
610	629	120C	Factory
629	635	121C	Bridge (low contrast)
635	643	123A	Factory Complex
643	655	123B	Factory Complex
655	665	127A	Factory (bldg. half black, half white)
665	687	133A	Ship at Pier (white super structure black hull)
687	703	134A	Power Plant
703	716	136A	Bridge
716	722	137A	Factory (black bldg. below smoke)
722	730	137B	Factory (bldg. left of tall stack-dust beyond long low flat bldg)
730	742	107A	Bridge, traffic, and Birds
742	747	120A	Factory (smoke and haze)
747	752	120B	Factory (smoke and haze)
752	766	144C	Multiple Bridges and Pipeline

the flight test were flight control and navigation, terrain avoidance and following, approach and landing, and searching for targets of approximately known location as a navigation aid. These applications require the presentation of pictorial information of the ground scene via the HMD. During night flight, this would probably be obtained from an infrared sensor or perhaps a low light level TV system. Such a system would provide a pilot with day type VFR visual information. During daytime flight, electro-optical sensors could be used.

All the HMD equipment development and costs associated with flight time were Hughes Aircraft Company financed.

Apparatus

In order for the pilot to obtain a pictorial view of the terrain, a head slaved sensor system must be developed. In a sophisticated system, this would require use of a helmet sight system and a servoed sensor drive. However, for this flight test evaluation, the need for such a complex system was circumvented by attaching a TV camera sensor directly to the pilot's helmet. In this case, a lightweight Shibaden HV-50U camera weighing 3 1/2 lb. was mounted on the left side of the pilot's helmet as shown in Figures 20, 21, and 22. A Hughes Aero Commander aircraft was used for the flight test because of its good ground visibility, large area windshield (see Figure 23) and a suitable load carrying capacity.

The installation of the equipment in the aircraft is illustrated in Figure 24. In the specially constructed mounting rack, power supplies and inverters necessary for supplying 110V, 60 Hz and 110V, 400 Hz power sources; two display electronic boxes (see Tech Report No. AMRL-TR-68-181); camera electronics box; a Sony two-inch video tape recorder with audio channels; and a TV monitor for displaying the HMD scene to the experimental observers were mounted. Electrical load check with all apparatus working in the aircraft demonstrated that the equipment drew 31 amps of current from the 28 volt DC electrical system of the Aero Commander. The total weight of the experimental gear was 347 lb.

The total weight of the helmet with camera and displays was 9 lb. with the heaviest condition. The helmet was initially unbalanced with left-side heavy. The effect was quite noticeable during the first flight; although, it did not appear to influence performance. A counterweight of approximately 1.3 lb. was added to the right side of the helmet prior to the subsequent flights, and this considerably relieved the imbalance problem. No adverse effects or significant fatigue relating to helmet weight were reported when wearing the helmet for periods up to 45 minutes. Aircraft maneuvers such as steep turns did not cause any transitory discomfort.

Figure 20. Cockpit Scene in Aero Commander Aircraft Showing the Helmet Apparatus and the Subject's Location.

Flight Details and Routes

A total of five flights were made. The first four were flown during daylight, and the final flight was made at night. In each flight, the experimental subject was located in the right-hand pilot's seat. A safety pilot occupied the left seat. Two experimenters were present as observers. Video tape recordings were made of the HMD image throughout all flights, along with subject commentary on the audio channel. The tasks performed by experimental subjects varied widely, ranging from full 3-axis control of the aircraft to viewing the display without control of the aircraft.

Flight 1. Flight 1 covered the following areas: Long Beach Harbor area, along the harbor breakwater; overwater flight to Catalina Island, and a right-hand circuit around the island approximately 1/4 mile from the coast; across water flight to mainland; over Los Angeles suburbia and landing at Culver City. Segments of the flight were conducted at 1000 feet altitude. The altitude was at 400-500 feet the majority of the time.

Figure 21. The Occluded Display on the Experimental Helmet

Experimental Subjects. Two experienced pilots served as subjects.

Conditions Studied. Single-eye occluded display with 35° visual subtense, and 48° visual subtense conditions were evaluated. With the occluded displays, a camera lens FOV of 35° was always used. Weather was 2200 feet overcast, 5 miles visibility in haze, with no distinct horizon.

Flights 2 and 3. Local circuits of the Hughes Culver City Airport, including two low approach passes over the runway were flown. Maximum altitude was approximately 1000 feet.

Experimental Subjects. The first subject had flying experience; the second was not a pilot but had human factors experience in judging displays.

Conditions Studied. A single-eye occluded display, 35° visual subtense optics was studied. Weather was clear with low smog, ground visibility 4 miles, improving to 15 miles at altitude.

Figure 22. The See-through Display on the Experimental Helmet

Flight 4. Flight 4 covered areas northwest from Culver City to Malibu along coastline, direct across mountains to Thousand Oaks, westward along Ventura Freeway to Oxnard, then east via Santa Paula, Fillmore to Newhall, then south over freeway to San Fernando Valley direct to straight in approach to Van Nuys Airport Runway 16R. The flight then proceeded west to landing at Ventura, and finally southeast to Hughes Culver City via coastline. This flight covered the following types of terrain:

1. Flat-populated,
2. Over-water,
3. Canyon and mountain terrain, and
4. Rural Valleys.

Both high and low-level terrain clearance was flown.

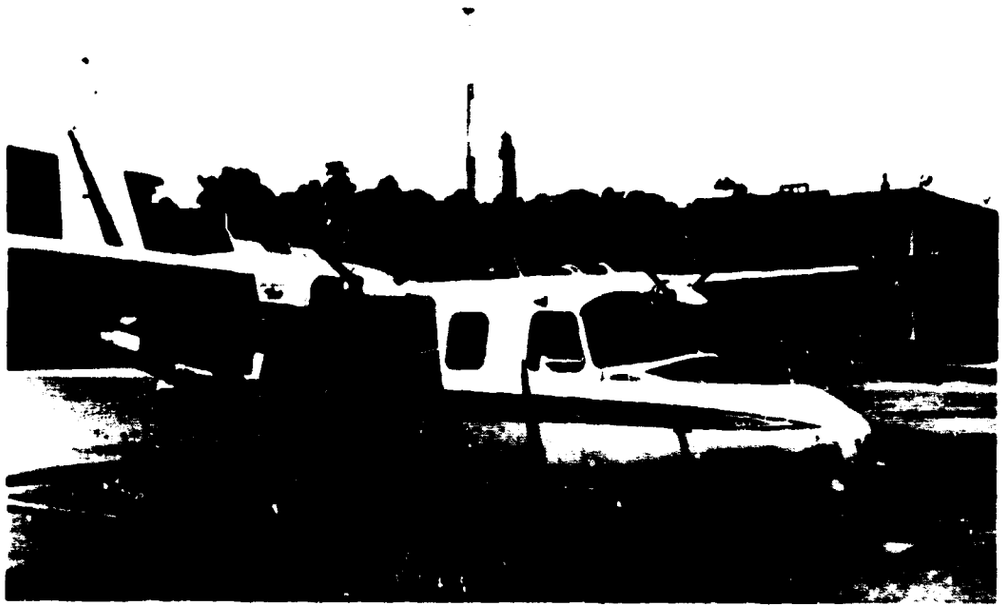

Figure 23. External View of Aero Commander Showing Windshield and Window Visibility, with Experimental Subject Located in the Right Seat

Experimental Subjects. Three subjects were used in the flight, an experienced test pilot, a private pilot, and a psychologist with some flying experience.

Conditions Studied. A single-eye see-through display with 98/2 combining glass with and without an additional 1 percent neutral density filter was evaluted. The field of view of the real-world scene as seen through the combining glass was 39°. The HMD CRT scene was 20° of visual subtense. The weather was generally clear with average 6 mile ground visibility, improving to 20 miles at altitude with well-defined horizon.

Flight 5. Flight 5 was the night flight from just after dusk to full darkness. It covered rural and urban areas in the vicinity of Los Angeles. Altitude ranged from 1000 to 2000 feet.

Experimental Subjects. The same test subjects as Flight 4 were used.

Conditions Studied. Single-eye occluded and single- and two-eye see-through displays (low transmission combining glasses, 20° visual subtense were studied. The weather was clear with 20-miles

Figure 24. Experimental Equipment Rack Mounted in the Aircraft

of visibility. The HMD display the subjects saw in this flight was from the Hollomon AFB target set, because the TV camera could not present a useful image under nighttime conditions.

Test Results and Discussion

The results are based on subject debriefings and recorded comments made during flight.

Fitting of the Displays. The mounting design of the see-through displays was found to be the more satisfactory arrangement. It provided a stable mounting to the helmet and a satisfactory exit pupil (10mm). The mounting for the occluded display proved to be difficult to adjust and was somewhat unstable. These factors combined with a small exit pupil (4mm) caused this mounting arrangement to be judged unsatisfactory. Subjects at times found it necessary to steady the display with one hand.

Head Motion and Field of View out of the Airplane. No restrictions to head movement were found owing to the internal geometry of the airplane. The field of view available to the camera proved to be sufficient to give good coverage of the terrain forward and to the

right-hand side. There was some tendency for subjects to sit forward in order to increase the downward field of view in an apparent effort to obtain a more complete picture of the terrain, and at lower altitudes, to obtain a more accurate estimate of line-of-sight rates used to form an estimate of aircraft direction.

Visual Subtense of Occluded Display. The two visual subtenses most preferred in the laboratory were compared during Flight 1. The optics with a visual subtense of 35° had a magnification of 1.00. The optics with a 48° visual subtense had a magnification of 1.37. The opinions of the two pilots were in disagreement as to which gave the most desirable display. One preferred the larger magnification display because there was not so much of an impression of "looking into a tunnel". The other pilot preferred the smaller visual subtense optics, because the small exit pupil did not interfere with the image as much and the magnification seemed to be nearer what he expected. This variable should be prime concern in any future flight tests.

Ambient Brightness. Under the normal daylight brightness (approximately 8000 foot lamberts) which was encountered during the daytime flights, subjects generally found great difficulty in using HMD when the other eye was exposed to the high ambient brightness. Retinal rivalry effects were marked under these conditions. In fact, most flying was done with an eyepatch covering the left eye.

Some subjects claimed that the display was unusable unless an eyepatch was used to cut out high ambient brightness. In later flights, it was found that reducing the ambient light to the open eye by use of a one percent neutral density filter allowed subjects to gain satisfactory information from the HMD. Rivalry was considerably reduced with this technique. During nighttime flight, even when flying over urban areas, there was no need for a filter over the open eye.

Combining Glass Optics for See-Through Display. For daytime flight, it was necessary to use a combination of combining glass and neutral density filter to attenuate the external brightness so that only 0.09 percent was transmitted through the HMD. With greater light transmission, the CRT is washed out against a brighter background. This value of 0.09 percent was satisfactory for all situations except when the aircraft was headed west into the late afternoon sun. With this amount of filtering, usable information from the terrain could be obtained with direct vision using the see-through capability, but the light from the cockpit instruments was too much reduced to allow the displays to be easily read. A variable transmission filter arrangement would facilitate evaluation in future experiments and would reduce the problems associated with this type of display.

For nighttime flight, a low transmission (15 percent) combining glass was satisfactory, except when viewing the most brightly illuminated urban areas where the very low transmission optics was needed (9 percent).

It should be pointed out that the amount of filtering that is necessary is very much determined by the brightness of the display CRT.

Spatial Orientation. The results of Flight 1 indicated a great need for having some aircraft reference information included in the HMD image. With no reference other than the image in the display, subjects experienced disorientation. They were unable to satisfactorily separate motion of the scene due to head orientation from those due to aircraft attitude and azimuth heading. For example, there was no means of telling whether the aircraft was banked or the pilot's head was tilted, as each had the same effect on the display. In Flight 1, there was the additional handicap of a poorly defined horizon due to poor visibility conditions; in this case, there was no good way of relating the pilot's head, the airplane, and the real world frames of reference.

The importance of these factors was shown by the flight along the harbor breakwater. The continuous tracking task of flying directly over this line using the HMD indicated that the display provided little aircraft heading information. The task was actually performed by taking note of the aircraft lateral rates and using these to supply cues of heading. Peripheral visual cues which provide precise information on the angular position of the head with reference to the axes of the aircraft were lacking in the HMD system. These cues are present in normal vision but are absent from the HMD because of the restricted FOV of the sensor. Another finding was that without precise bank angle or azimuth angle information, unintentional turns sometimes occurred.

After Flight 1, aircraft reference cues were added to the display by adding horizontal and vertical opaque strips of tape to the windshield. Although these were out of focus in the display, they were at least partially successfuly in adding the necessary cues to the display. Several test subjects stated that it added significant information to the display, particularly after a number of turning maneuvers. One non-pilot subject experienced motion sickness as a result of using the display. A possibility exists that this was due to the lack of orientation cues through the display. Normal flight did not bother the subject.

Terrain Following and Clearance. Flight around Catalina Island and in mountain and gorge terrain demanded more complex flight control. Terrain following required estimation of range to obstacles, the anticipation of turns, and terrain clearance. Flight around the island indicated that subjects could judge lateral distance with reasonable accuracy, but altitude judgments tended to be less accurate. One subject suggested that because the only view with the HMD was to the inside of the turn, misinterpretation of relative motion occurred. Objects on the inside of the turn moved slower than expected, and this yielded the impression of being higher than the actual altitude. To

reduce this effect, the pilot's head (and the TV camera) was kept pointed as near to the aircraft longitudinal axis as possible. Practice using the HMD in turns should decrease these illusions somewhat.

One period of terrain following in gorge country was accomplished using a see-through display. The pilot made use of both the HMD image and information from the outside environment. Turning was accomplished with reasonable accuracy, but once again the lack of completely defined aircraft reference information in the display proved to be a hinderance. These flight conditions indicated that reasonable accuracy of aircraft control in complex ground referenced maneuvers could be accomplished using the HMD.

Landing. Many landings were viewed by subjects through the HMD. As a result of this, confidence in the visual cues yielded by the display was developed. Landing (at Van Nuys Airport) was accomplished under an experimental subject's control with supervision of the safety pilot. A straight-in approach resulted in the 150 foot x 8000 foot runway being clearly visible in the HMD at a distance of 4 miles. A see-through display was used, but the pilot-subject made almost exclusive use of the HMD information during final approach and touchdown. Altitude and drift control was not as close as would be expected for normal contact flight, but the landing was accurately performed.

Two-eyed See-Through Display. The use of two HMD's, one for each eye, was evaluated in Flight 5. It was found that the two CRT images could be aligned without much difficulty. With the two tubes aligned, the brightness of the HMD image was enhanced.

There is some theoretical evidence that detection mechanisms in the eye act independently (Crawford, 1950; Wolf and Ziegler, 1955). There is usually a slight lowering of threshold in biocular as compared to monocular conditions which can be attributed to the statistical interaction of independent processes. This increased sensitivity suggests that target detection and recognition performance should be augmented by the use of two aligned displays. Whether this could justify the added complexity and weight to the helmet is another question.

CONCLUSIONS BASED ON LABORATORY AND FLIGHT EVALUATION

The HMD image quality in this evaluation was adequate for displaying symbology and/or detailed pictorial information. At the present time, this image quality is considered to be at a level just below that of conventionally sized CRT displays. The picture brightness with complex images was adequate, and the resolution and shades of gray representation was comparable to other CRTs.

The study indicated that interfacing the occluded display with the human perceptual system results in interference in the rate of information transmission. This type of display leads to problems of

retinal rivalry which in the daylight flight domain were found to be significant. Perception of information from the HMD may occur only after extended latencies. When using see-through displays, given a satisfactory balance between brightness entering the eye from the outside environment and the CRT brightness, alternation of attention between the external scene and the HMD scene can apparently occur at will. Despite the advantage of independent dark adaptation of the eyes in the occluded case, the preliminary and tentative indication is that the see-through device is preferred. This is because selective attention to each channel is less impeded in this system. This apparent superiority of the see-through display was probably heightened by the separation of the images arising from the different spectral composition of the HMD image and outside environment and the different focal plane of the two images.

A more detailed and systematic evaluation of such systems covering a range of system variables is warranted before these conclusions can be finalized.

HELMET MOUNTED DISPLAY MECHANIZATION

A discussion of the elements of a helmet mounted display mechanization is presented here. An analysis of CRT parameters (brightness, contrast, resolution) previously performed by Hughes on these devices is included first. This is followed by a description of a helmet mounted display optics tradeoff where different design approaches are compared. The CRT evaluation also includes a further investigation of the brightness characteristics of the selected tube. An electrical circuit design for driving the HMD CRT from a remote control box is then described. Finally, an existing Hughes mechanical design is described which includes discussion of the mounting of the display to the helmet, the latch arrangement, and the mechanical adjustments.

CRT Evaluation

Recent increases in resolution with a reduction in size and weight of the CRT's enable an HMD to be developed which will provide excellent image quality for TV imagery. The results of a previous evaluation performed in this laboratory (WPAFB Tech. Report No. AMRL-TR-68-181) are summarized here.

Some desirable design goals are as follows:

1. 1000 TV line resolution and 20 foot lambert brightness.

2. Minimum weight and size.

3. Complete electrical safety to the wearer.

The major performance parameters (brightness, resolution, contrast, etc.) defining the image quality of the display are determined by the properties of the CRT. As such, laboratory evaluation of CRT's is a most important phase of preliminary design. Selection of a CRT should be dependent on size, weight, and ease of operation, as well as its display characteristics. Because of the small size of the CRT, one difficulty is to achieve the required resolution at an adequate brightness level.

The description and results of an evaluation of three CRT's are now described. This evaluation was carried out on the CR 3015, the 1E 27 P20, and the WX-4527 P20. Important CRT parameters for these three tubes are shown in Table X. The size characteristics of these tubes are shown in Figures 25 and 26.

Because of the requirements for high altitude operation, the location of the CRT near the operator's head, and lower deflection power, it is desirable to use the lowest voltage that provides an adequate picture. For the electromagnetically deflected display tubes, it was found by testing that adequate brightness and resolution can be obtained with less than maximum final anode voltages. For the CR 3015, this voltage could be reduced from 8.5 kv to 5 kv; and for the WX-4527 P20, from 10 kv to 8 kv. The focus voltages used were 800 and 1200 volts, respectively. For the electrostatically deflected

Table X. Characteristics of Three Small Cathode Ray Tubes Applicable to Helmet Mounted Displays

Tube	Size			Deflection Technique	Focus Technique	Total Resolution (Shrinking Raster) (Per MIL-E-1E)	Brightness High-light Inscribed Raster	Notes
	Max O.D.	Max Length	Screen Size					
CR3015	1.11 In.	5.0 In.	0.75 In. Dia	M	E	800 lines/Dia	175 Ft-L at 7 KV	Encapsulated with Deflection Coil P1, P4 4.2 Os
WX-4527-P	1.125 In.	7.0 In.	0.6 In. Dia	M	E	800 to 1000 Lines/Dia	35 Ft-L at 8 KV	P20 3.7 Os
1E27-20	0.9 In.	4.76 In.	4.76 In. Dia	E	E	800 Lines/Dia at 2.5 KV	20 Ft-L at 2.5 KV	P20 1.15 Os

Figure 25. Small CRTs Considered for HMD Application

1E 27 P20, the focus voltage was approximately +600 volts for the mode of operation used, namely +2.5 kv post accelerator, +2.5 kv near ground deflection plate, and -2.5 kv cathode operation.

Brightness Measurements. Brightness measurements were made with a 525-scan-line TV raster inscribed in the useful area of the CRT. The brightness of the two electromagnetic CRTs studied, the CR 3015 and the WX-4527 P20, ranged from 50 to 200 ft. lamberts for a final anode voltage range of 5 kv to 8.5 kv, and 8 kv to 10 kv, respectively. The brightness of the remaining tube, the IE 27 P20, was 20 ft. lamberts.

Resolution Measurements. A double slit analyzer was used to measure the resolution of two of the tubes -- the WX-4527 P20 and the 1E 27 P20. This technique could not be used with the CR 3015 tube, because of the persistence of the P-1 phosphor. The resolution measurements for this CRT were made using the shrinking raster method. The spot size for all three tubes tested was approximately 0.001 inch.

Contrast Measurements. The amount of gray shade information that can be displayed on a CRT is related to the degree of contrast that can be obtained on the CRT's screen. Contrast is defined as the ratio of maximum screen brightness to minimum screen brightness. Low contrast ratio means that the CRT will be capable of displaying a small number of discernible shades of gray. The contrast ratios of a CRT can be divided into two general classifications: large area contrast and small area or detail contrast.

The large area contrast of a CRT is the ratio of brightness (luminance) of two widely separated areas on the CRT's screen. The CRT's beam excites the screen to a particular brightness level in one area, and the beam is cut off in the other area.

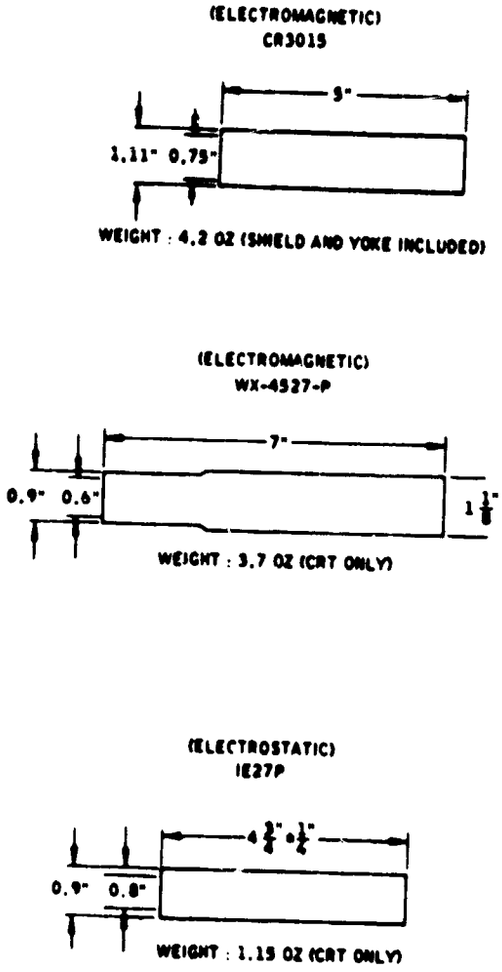

Figure 26. Size and Weight Characteristics of CRTs

The small area contrast of a CRT is the ratio of brightness of adjacent areas on the screen and is closely related to the resolution capability of the CRT. All three CRTs tested had the capability to display eight discernible shades of gray.

Large and small area contrast was measured as shown in Table XI. These measurements were made in a dark laboratory. A 525-scan-line raster of normal height and one half width was used. The measurements were made on the screen at the places shown in Table XI. The contrast ratios are also listed in this table.

Conclusions. All three tubes yielded adequate performance and were judged acceptable. However, the electromagnetic CRTs can deliver higher brightness and still maintain small spot size. In addition, the electromagnetic CRTs have (1) the capability to operate the cathode near ground potential without complicating the deflection circuits and (2) the capability to change and adapt the deflection yoke to the deflection signal and cable requirements.

The major advantage of the electrostatic CRT over the electromagnetic tubes is that the electrostatic CRT, including shield and potting could be 2 to 3 ounces lighter. The electrostatic tube would, however, require more high voltage wires with the associated problem of coupling the video signal in a depressed cathode (-2.5 kv) or deflection signals in elevated deflection plates (+2.5 kv). Thus, the potential weight advantage of the electrostatic CRT would be partially offset.

The test results and the manufacturer's specifications show the screen and the electrical characteristics of both electromagnetically deflected CRTs to be almost identical. The CR 3015 was the only unit available with the CRT and deflection yoke potted in the shield as an integral unit. The mechanical requirements for the helmet-mounted display make this an important consideration, and as such the CR 3015 was considered to be the most satisfactory evaluated.

Additional Evaluation of the CR 3015

Introduction. The purpose of this evaluation was to determine values of tube brightness for usable pictures under different ambient viewing conditions. It is conceivable that these values could differ from manufacturer's claims or from those brightness values obtained with just a TV raster. Brightness was measured after it had been adjusted by experimental subjects to give subjective optimum image quality of usable pictures (test pattern and contextual view). It is possible that the adjustments for optimum viewing conditions could be affected by the light adaptation level of the subjects, and as such the adjustments were carried out under conditions of partial dark adaptation (5 minutes of dark adaptation), adapted to 200 foot lamberts (room brightness), and light adapted to 8000 foot-lamberts (bright daylight brightness).

Table XI. Contrast Characteristics of CRTs

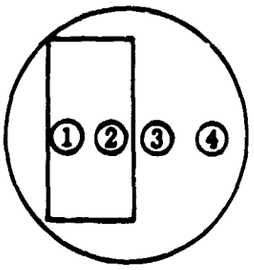

Place of Measurement Brightness (Ft - L)				Contrast	
				Large Area	Small Area
1	2	3	4	L=1/4	S=2/3
CR 3015					
10.5	10.5	0.4	0.04	262	26.2
30	30	1.1	0.15	200	27.2
68	68	3	0.4	170	22.6
125	125	9.05	1.05	119	13.8
IE 27 P20					
5	5	0.55	0.028	178	9.1
10	10	1	0.057	175	10
15	15	1.45	0.089	168	10.3
20	20	1.8	0.15	133	11.1
WX-4527 P20					
6	6	1	0.13	46	6
24.5	24.5	4	0.5	49	6
68	68	9.2	2.0	34	7.4
100	100	13	3.0	33.3	7.7

Procedure. The CR 3015 tube viewed through 5 power magnification optics was set up in an ambient controllable experimental room. The tube was driven at a final anode voltage of 7 kv, and the images were obtained from a flying spot scanner. A standard EIA television test pattern and a contextual scene of San Pedro Harbor was used for the imagery displayed on a 525 line TV raster. The subject was provided with controls for adjustment for both brightness and contrast of the display. Four experimental subjects were used. Each subjects received the three adaptation levels and the two types of scene. The adaptation time to each ambient brightness level was 5 minutes, and the subject was instructed to complete his brightness and contrast adjustments within a 30-second interval.

Results. The inter-subject and intra-subject variability for adjusted highlight brightness was high. However, the generalization can be made that the subjective optimum brightness level was less for the contextual scene than for the TV test pattern. (See Figure 27). An optimum highlight brightness of more than 200 foot lamberts was obtained from the CR 3015 tube before transmission through an optical system. The effect of dark adaptation level of the subject was not clear, and more extensive experimentation would be necessary to effectively evaluate the effect of this factor.

This study indicates that for patterned fields typical of those obtained from sensors such as radar, IR, and Low light level TV, the range of optimum highlight brightness is between 50 and 120 ft lamberts.

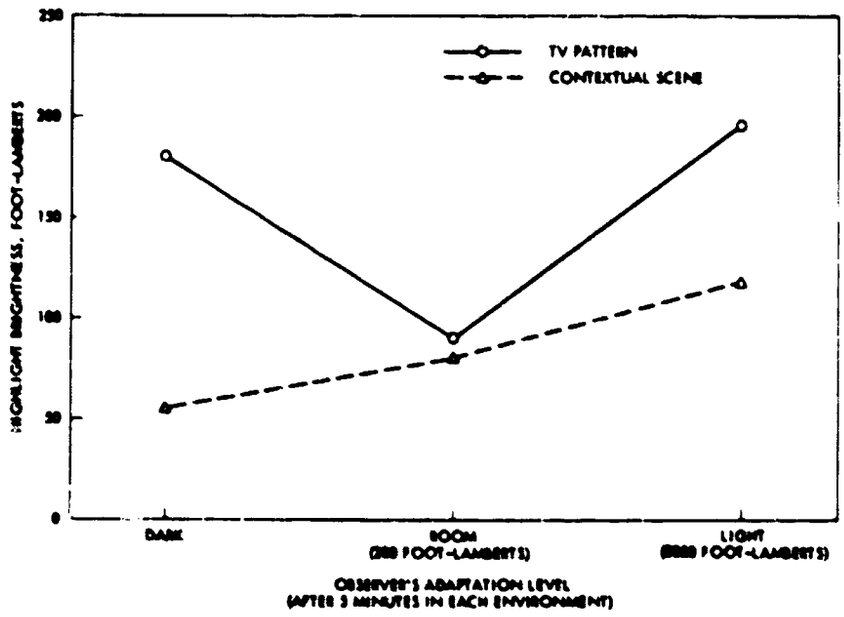

Figure 27. Operator Adjusted Optimum Brightness for Various Operator Adaptation Levels and Type of Scene

Helmet Mounted Display Optics Tradeoff

The problem of determining the optimum optical design approach for a HMD system is functionally similar to that of a conventional fixed HUD. The HMD must provide a collimated image of the CRT to the operator superimposed on the real world. The design constraints of low weight, large exit pupil diameter, maximum display brightness, and minimum interference with other operator functions are applicable to both types of displays. As a result of this similarity, much can be drawn from the applicable HUD optical technology in arriving at an optimum optical design approach for the HMD.

Since the HMD adds weight to the pilot's helmet and is a potential problem in a high "g" environment, consideration must be given minimizing its weight while providing a system with a field of view of approximately 40 degrees (apparent display size).

Reflective Versus Refractive Optics. Two basic types of optical systems can be used to present collimated images of a CRT to the operator, refractive and reflective. A survey of existing HUD systems indicated that the refractive optics technique is the most widely used. On-axis and off-axis reflective optics systems have also been developed but have had limited use in airborne systems. The refractive optics systems are characterized by low distortion, low cost, and high weight for a limited field of view. The reflective option systems are characterized by high cost, low weight, large field of view, and in some cases, complex optical elements resulting in significant distortion errors.

Refractive Optics. In a refractive system, a refracting lens is used for image collimation and a flat partially reflecting mirror (combined) combines the CRT image with the real world. First surface mirrors fold the optical system into the desired geometry.

The instantaneous field of view is limited by the lens diameter and the eye-to-lens distance and is expressed by the following equation:

$$\alpha = 2 \arctan \frac{\text{lens diameter}}{2 \times \text{eye-to-lens distance}}$$

where

α = total angle subtended at the pilots eye.

It is apparent from the above equation that the field of view is directly proportional to the diameter of the collimating lens. The weight of a lens is approximately proportional to the square of the diameter so that increases in diameter produces a very pronounced increase in total optical system weight.

Figure 28 is a folded refractive system designed for the helmet mounted display. Due to the size and speed required for prime optics, where the beam splitter is between the observer's eye and the eyepiece optics, it is not a practical approach. The major disadvantage of systems of this type is the required large diameter of eyepiece optics for a field of view greater than 15 degrees. A 40-degree field of view would require a diameter of approximately 2-1/2 inches.

The optical system illustrated in Figure 29 is also a folded refractive type. The design is unique in that the prism/beam-splitter has been configured on three sides to reduce the number of optical elements required. This results in a weight reduction and a larger field of view. Opposing ends of the prism/beam-splitter are configured to form a unit magnification telescope. This system requires a large prism/beam-splitter for a 40-degree field of view. In addition, large aperture relay optics are required for a system of reasonable speed. Reducing the eye relief will reduce the prism/beam-splitter size. Eye relief reduction if not acceptable.

Reflective Optics. It is possible to achieve a significantly greater instantaneous field of view by utilizing reflective optics rather than refractive optics. These techniques use curved combining glasses

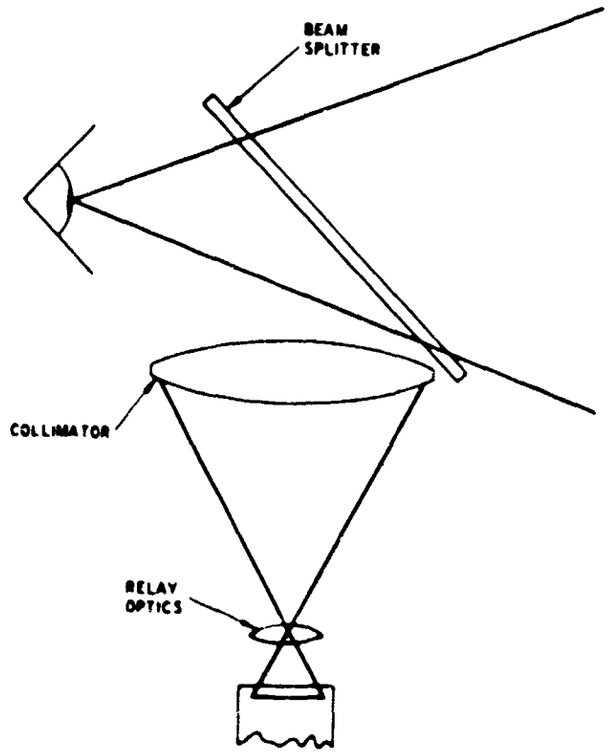

Figure 28. Folded Refractive System

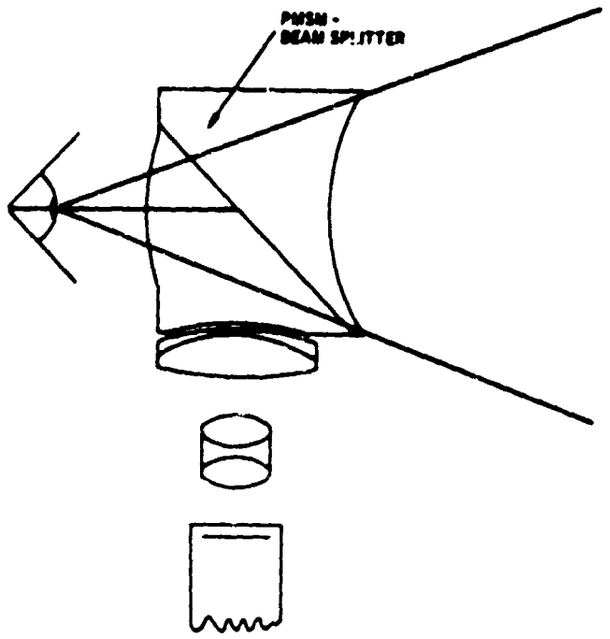

Figure 29. Folded Refractive System with Beamsplitter

that perform image collimation at the reflecting surface of the combiner, curved mirror, or a sequential combination of the two. There are two basic types of reflective systems, on-axis and off-axis.

The system illustrated in Figure 30 is basically an off-axis reflective type incorporating an aspheric combining glass which supplies first surface power in addition to performing the combining glass function. An aspheric surface is required, because off-axis systems introduce astigmatism, among other optical aberrations. This kind of correction, due to the use of aspherics, results in non-uniform distortions in the field of view. These distortions are anamorphic in nature and form images in the field of view that are unreal in appearance. This approach is, therefore, considered unacceptable.

The most promising approach from an opto-mechanical point of view is an on-axis reflective system as illustrated in Figure 31. The advantages of such a system are large exit pupil, low distortion, small size, large field view, light weight, and efficiently manufactured optical elements.

The eye looks through the system with undistorted vision. The light remains collimated through the combining glass and also through

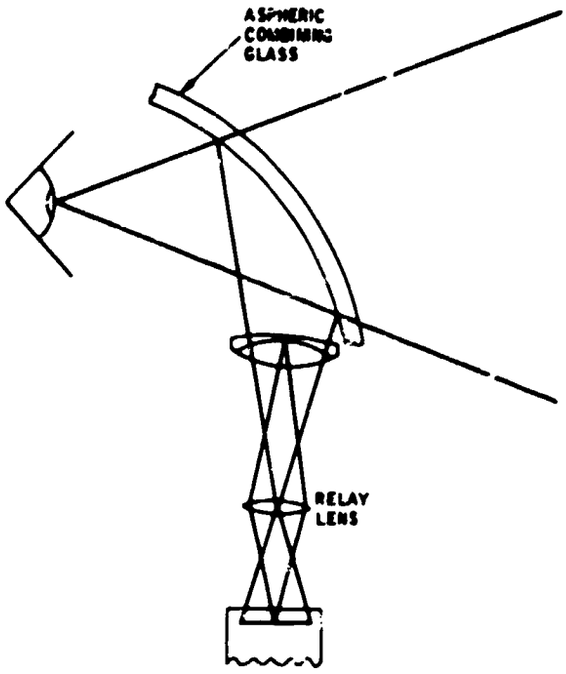

Figure 30. Off-Axis Reflective System

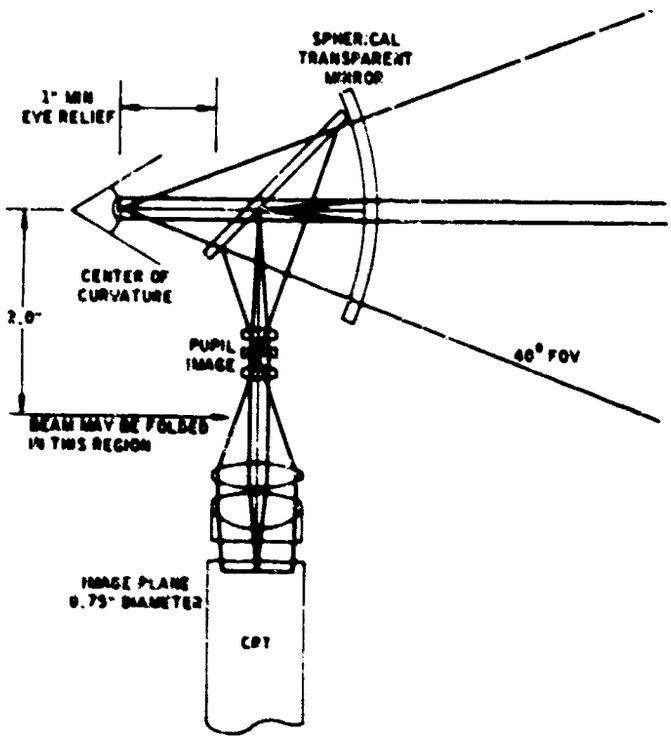

Figure 31. On-Axis Reflective System

the spherical semi-transparent mirror. The field of view is restricted to 40 degrees but can be changed within reasonable limits.

The unique feature that makes it possible to design and build workable optics rests primarily in the pupil relay system, consisting of a single spherically curved reflector and a single flat combining glass.

Looking at the system in reverse order to the light path (to facilitate description) reveals the following optical characteristics. The eye is placed at the center of curvature of the pupil relay reflector and is consequently imaged by the reflector back on itself. Due to the interposition of the flat combining glass, another image of the pupil is formed below at a right angle to the direct vision path if the combining glass is at 45 degrees. The pupil relay reflector focuses parallel light at a point slightly below the combining glass. At this position, there will be formed an intermediate image of the CRT. This image will be highly aberrated but is corrected by the following optical systems. A Cook Triplet collimating lens placed at the pupil image recollimates the image which is then imaged through a relay lens similar to an eyepiece in construction. The final image is then formed upon the CRT. However, to fit the constraints imposed by the packaging requirements, the system is capable of being folded between the two lenses, and should it be thought desirable, an extra relay lens may allow another fold to be incorporated within the space following the last lens in the vicinity of the CRT.

The on-axis reflective system characterized by 40-degree field of view, large exit pupil, low distortion, and low weight is the recommended optical design approach.

Electrical Circuit Design

All electronic circuits and controls except for the video driver may be located in a panel-mounted electronic control box. The bias voltages and signal voltages from the electronic control box are applied to the CRT through a cable. The electronic control box should have three outside controls. They are power on-off switch, contrast, and brightness. Additional controls such as vertical and horizontal hold need not be externally available. This design is extracted from a previous report (WPAFB Tech Ref No. AMRL-TR-68-181).

Deflection Circuit. An operational-type linear deflection amplifier with emitter follower output stage (Figure 32) was chosen for horizontal and vertical deflection of the CRT's beam. The use of the linear deflection amplifiers simplifies the switching between the 525 and 945 TV scan line displays and helps to achieve better linearity of the display. The same deflection amplifiers are used for both axes because of the symmetrical 100 μH deflection yoke used with the CR 3015 CRT. The retrace time of this deflection circuit will be less than 10 μsec. The deflection amplifier converts ± 1 ampere output. The current output of

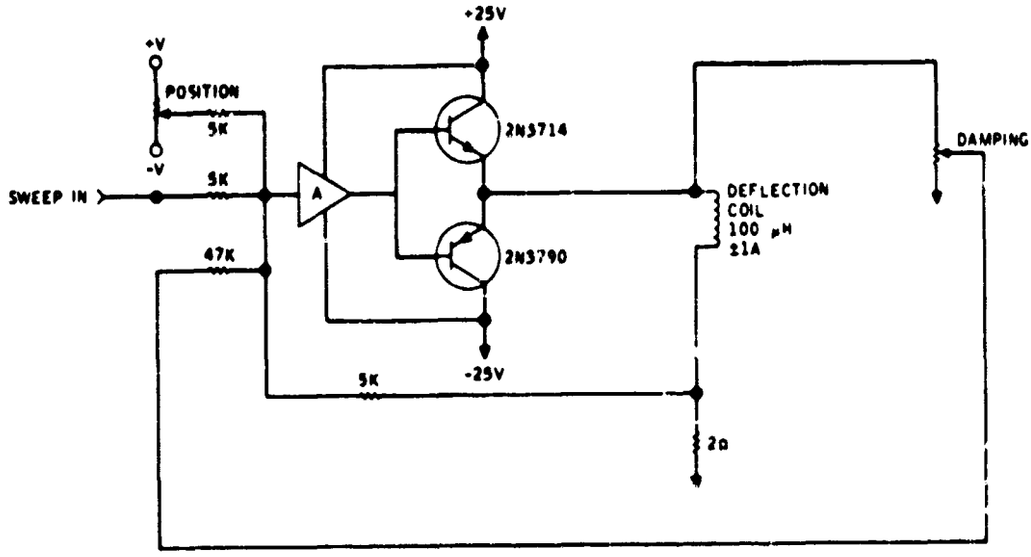

Figure 32. Deflection Amplifier

the deflection amplifier is sensed by a phosphor protection circuit which cuts off the CRT's electron beam in case of sweep failure.

Video Amplifier. The video amplifier must be capable of providing a CRT control grid with a 30-volt P-P signal having a bandwidth of 20 mHz. Assuming the normal minimum video output signal of 0.5-volt P-P for closed circuit TV cameras, the maximum voltage gain of the amplifier must be 60. Additional blanking must be performed in the video amplifier rather than at the CRT cathode, because it is difficult to blank a CRT using the cathode. When the circuitry is remotely located, the blanking signal has to travel over a long length of cable and terminate into a low impedance.

The video chain (Figure 33) is broken into two distinct sections: (1) the output amplifier, mounted in the headset, and (2) the medium level amplifier, mounted in the control box. It is impractical to drive a 30-volt video signal to the CRT grid over a terminated coaxial cable. The currents involved would be too large. Therefore, the video signal is amplified to a 3-volt level, then coupled with coax to an output amplifier mounted in the headset where the video is amplified to the required 30-volt level. To minimize the dynamic range of the output amplifier, the signal is D-C restored prior to coupling to the output amplifier (Otherwise, the dynamic range of the output amplifier would have to be 60 volts to avoid saturation or cutoff in going from all white frames to all black or vice versa).

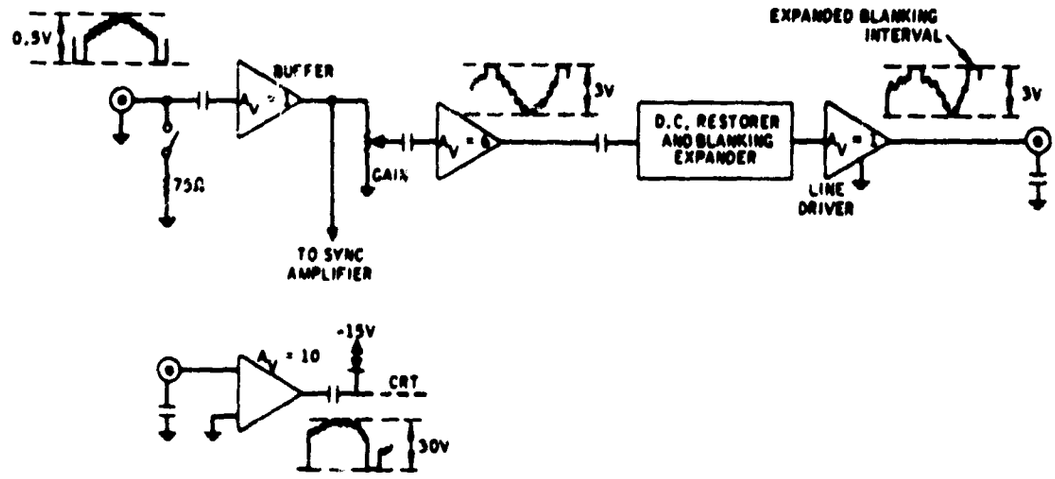

Figure 33. Video Amplifier

Sync and Sweep Circuitry. The sync and sweep circuits (Figure 34) must be capable of providing the monitor with a 2:1 interlace sweep when standard EIA composite sync signals are present at the input. This is accomplished by first amplifying and stripping the composite signal to obtain sync pulses.

Horizontal synchronism is maintained by differentiating the sync pulses to obtain trigger signals that synchronize a free-running multivibrator to the line rate. A one-shot is activated by the multivibrator and provides a signal to the sweep generator that results in a 2-volt sawtooth with a 10-μs flyback time at the sweep generator's output.

Vertical synchronism is obtained by passively integrating the sync pulses present at the stripper's output. The integrator's output will rise to voltage V_x only during the vertical blanking interval. When this voltage is reached, a comparator senses it and changes state. The comparator's output is gated with the horizontal sync pulses which trigger a free running multivibrator. Due to the precisely controlled half line delay in sync pulses during vertical blanking, the gate's output will provide properly timed trigger pulses to insure exact 2:1 interlace.

Power Supplies. The requirements for secondary voltage forms are as follows:

1. +5k V at 0.1 mA or less (CRT anode)

2. Adjustable +800 VDC to +1500 VDC at 0.15 mA (CRT focus)

3. 6.3 VAC at 300 mA (CRT filaments)

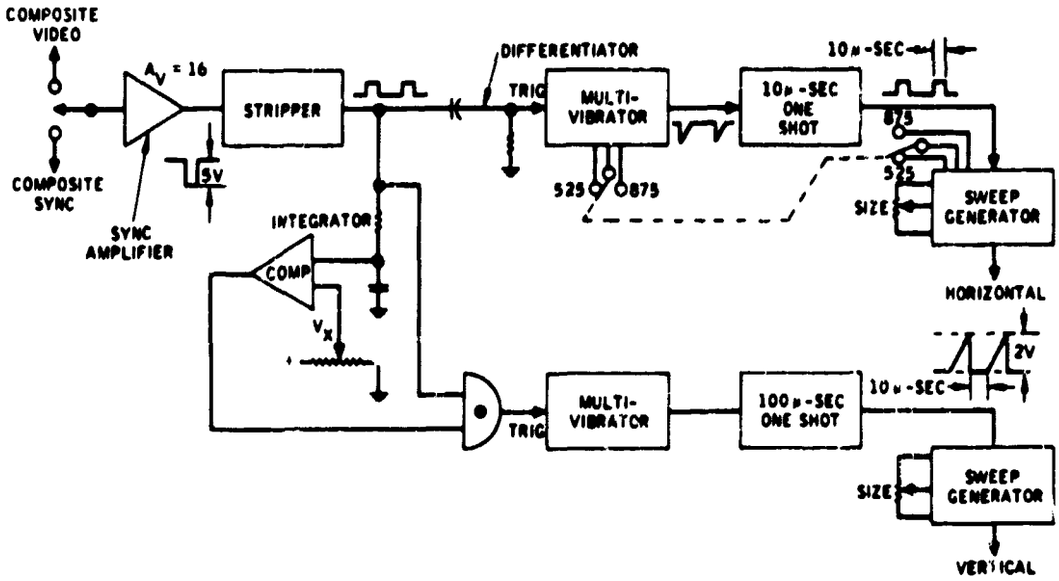

Figure 34. Sync Separation and Sweep Generation

4. +25 VDC at 1.3 amperes (2.3 amp peaks)

5. -25 VDC at 1.2 amperes (2.2 amp peaks)

6. +300 VDC at 0.1 mA

Item 4 above supplies deflection amplifiers, high voltage power supply (HVPS) inverter, and the rest of the circuitry.

Item 5 above supplies deflection amplifiers and the rest of the circuitry. The deflection amplifiers and the HVPS inverter introduce transients that are deterimental to each other and to the rest of the circuitry. This leads to the following power supply configuration.

1. A raw supply producing ±32 VDC, 6.3 VAC and +300 VDC,

2. Series regulators (5 in all) to supply ±25 VDC to the deflection amps, 25 VDC to the other circuitry, and +25 VDC to the HVPS inverter, and

3. An encapsulated HVPS fed by an inverter. This supply includes two transformers. One operates directly with the inverter to produce (with diodes and capacitors) +5 kv. The other transformer is slaved to the inverter via control circuitry to produce the adjustable +800 VDC to +1500 VDC focus voltage.

The total power dissipation is approximately 90 to 100 watts.

Mechanical Design

Mounting Configuration. Mockups have been built and tested with Air Force and Navy helmets and their respective oxygen masks. Figures 35 through 40 illustrate the three basic configurations considered.

The top-mount configuration (Figure 35) was potentially the lightest but offered serious objections with respect to line-of-sight of the left eye. Cable dress problems (to the rear of the helmet) would add excessive weight, and the moment of inertia about the vertical axis of the head would be high. There are potential canopy interference problems with certain types of aircraft.

The side-mount configuration (Figure 36) cures the line-of-sight problem for the left eye but causes serious operator adjustment problems (horizontal adjustment requires lengthening and shortening the optical tube). Also, the latch location would interfere with the side canopy with certain types of aircraft.

The under slung configuration minimizes interference with all types of canopies and reduces moments of inertia about the spine. Figures 37 and 38 illustrate the Air Force mask. Figures 39 and 40 illustrate the Navy mask. The location of the headset receptacle with respect to the helmet is shown in these figures and best fulfills all the design goals. It places the attach and release device in a good location, it keeps all parts of the headset close to the axes of movement of the wearer's head, and it allows the left eye maximum usable vision.

Mechanical Adjustments. Accommodations for the wearer's eye position are as follows:

1. Vertical adjustment via vertical adjust slots on the hanger (see Figure 41).

2. Lateral adjustment by rotating the tube assembly. This swings an arc across the eye and interacts somewhat with the vertical adjustment.

3. Fore and aft adjustment by moving the tube assembly fore and aft. The tube assembly is locked in place via the tube clamp.

4. Raster angle (with respect to the wearer's eye) by rotating the CRT via the raster angle adjust knurled nut, and

5. Minor accommodations to anatomical variation between wearer's and a light seal are afforded by a compliant foam rubber eyepiece.

Figure 35. Top Mount

Figure 36. Side Mount

Figure 37. Air Force Mask – Underslung (side)

Figure 38. Air Force Mask – Underslung (front)

Figure 39. Navy Mask – Underslung (side)

Figure 40. Navy Mask – Underslung (front)

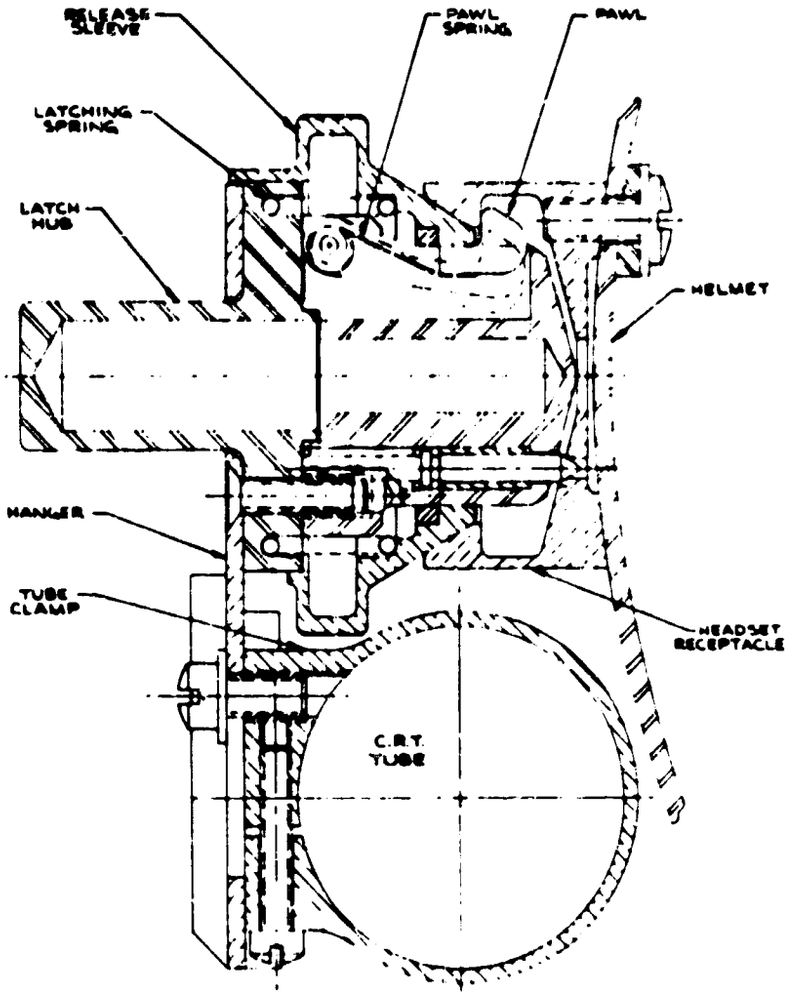

Figure 41. Latch Layout

Electrical Interface. The CRT high voltages, deflection signals, and video signal should be delivered from the electronics box to the headset on shielded wires and terminate directly into the CRT. The other required voltages (CRT filaments, etc.) may be on unshielded wires.

Latch Design. A preliminary layout of the latch design is shown in Figure 41. This is a self-centering device and is designed for positive release. This release action will override all latching and holding mechanisms and free the headset. It works as follows. The cone shaped end of the latch hub engages the headset receptacle and self centers. The cone-shaped portion of the release sleeve then contacts the headset receptacle. The latch hub moves in with respect to the release sleeve and compresses the latching spring. The pawls are now

clear of the inside ridge of the headset receptacle and are snapped into place by the pawl springs. (There are three pawls equidistant about the perimeter of the latch hub.) The headset is now attached to the helmet.

To release, the operator pulls on the release sleeve which moves with respect to the latch hub against the latching spring. The inner bottom edge of the release sleeve then engages the sloping edge of the pawls and forces them down out of the grasp of the inside ridge of the headset receptacle, and the headset is released. The latch assembly attaches to the cathode ray tube via the hanger and tube clamp.

SECTION V

HELMET MOUNTED SIGHT

INTRODUCTION

Studies of the representative F-15 avionics system suggest that a helmet mounted sight might be employed to advantage in certain mission applications. In this section, functional design requirements for such a sight are established. Three alternative sighting pick-off techniques are considered in order to arrive at the best choice.

FUNCTIONAL REQUIREMENTS

Functional requirements for a helmet sighting system are developed in the classified supplement of the report. These are summarized below;

Field of View	±30° or more (polar) with respect to ADL
Accuracy	Better than 1° RMS dynamic

HELMET SIGHT TRADEOFF

Introduction

The target designation process consists of communicating to the sensor or armament the target location referenced to the aircraft boresight in line-of-sight angle coordinates. The pilot must maintain continuous visual contact with the target until lockon. Several techniques have been developed or investigated which can provide the required line of sight coordinates. The techniques most applicable are 1) a rate gyro system, 2) mechanical linkage, and 3) light source and sensor system. Other approaches such as the oculometer and IR scanner were not considered because of high development risk or cost effectiveness.

Rate Gyro System. The system mechanization described herein resulted from an investigation into the feasibility of using rate gyros in a helmet optical sighting system. The object of the mechanization is to accurately measure the helmet position relative to aircraft axes so that a missile seeker may be slaved to the helmet and its optical sighting system. The system may be divided into two parts: (1) the portion which is helmet mounted and (2) the remainder which is aircraft mounted. The helmet mounted portion consists only of rate gyros and buffer amplifiers. Two or three rate gyros are employed, depending on whether single or two axis gyro designs are used.

Although present technology can produce gyros of 2 ounces maximum weight, it is expected that micro-miniature sensors of less than 1/2 ounce in weight will be available within the next year (5 experimental units have been made). Each gyro and self-contained buffer amplifier are directly mounted on the helmet and aligned to the helmet axes. The helmet contains an index alignment projection which at the pilot's selection may be momentarily inserted into an alignment socket on the aircraft to normalize the system and establish initial conditions.

The aircraft portion of the system consists of a demodulator, a low pass filter, a bias storage circuit to compensate for gyro null offsets, an integrator, an Euler angle computer, and a summing amplifier. The summing amplifier combines aircraft and helmet information and provides a signal to which the missile seeker gyros or guns may be slaved.

An error analysis based on existing production sensor hardware and thick film electronics techniques indicate system errors between 1.5 and 2.5 degrees for operating times of up to 5 minutes. After 5 minutes, the pilot would be required to reestablish the initial conditions. A block diagram of the system is shown in Figure 42.

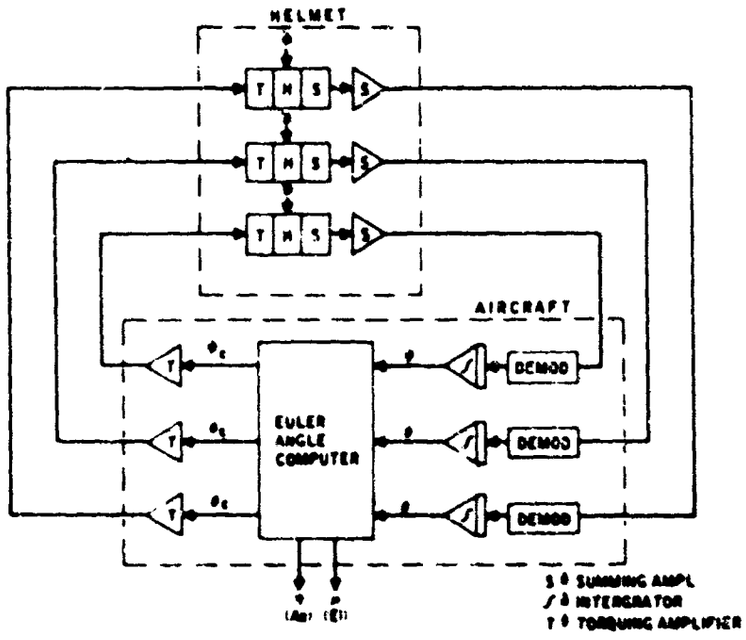

Figure 42. Gyro Helmet Sight Attitude Measuring System

Mechanical Linkage (Pantograph System). A second system which can provide line of sight coordinates has been developed by Sperry for use with a helmet mounted sight. With this approach, the pilot's line of sight is determined by measuring deflection angles of a mechanical linkage between the pilot's helmet and the airframe. A receptacle, consisting of a permanent magnet on an aluminum housing, is mounted on the helmet and secures the linkage with a force of 8 to 12 pounds. The receptacle adds 2.2 ounces to the helmet weight. Full freedom of movement within the cockpit is afforded to the pilot through a gimbal system and carriage slide. The gimbals are instrumented with resolvers to provide the transformation from the sight line to the base set coordinates.

The accuracy of the system is determined largely by the man using it. Alignment of the system at the time of installation can be made to within 2 mils without resorting to complex equipment. Pre-flight alignment by the pilot can be made to within 3 mils once he becomes familiar with the procedure. The remaining error is due to the man wearing the helmet. This error is difficult to estimate and will vary from operator to operator.

The major drawback of this system is the coupling technique. The mechanical linkage could constitute a severe safety hazard in the event of emergency ejection or mechanical lockup.

Light Source and Sensor System. Minneapolis Honeywell has developed a system that does not require mechanical linkages. The elevation and azimuth angles defining the attitude of the pilot's line of sight are determined by an electro-optical surveying technique. Two photo sensors are mounted on the side of the helmet and are scanned by a light source assembly (LSA) mounted on the airframe. The LSA generates two thin wedges of light that rotate at a constant angular rate. The angle between the light source plane and the helmet mounted photo sensors (HMPS) is given by the time delay between light detection by the LSA reference sensors and the HMPS pulses. The difference between the measured angles and the elevation and azimuth sight angles is a simple trigonometric relationship that is solved continuously during operation. The system will function correctly with any normal head motion and body motions providing the pilot's head has rotated less than ±60 degrees in azimuth and ±30 degrees in elevation.

The HMPS assembly can be added to a standard flight helmet without modification. The assembly is designed to break away from the helmet either upon ejection from the aircraft or upon impact.

The system will measure the attitude of the helmet within 12 mils at rates up to 30 deg/sec. This figure does not include the human error of designation and tracking. A block diagram of this system is shown in Figure 43.

Error Analyses

The three transducer systems for measurement and transformation of helmet sight angles described in the previous section were analyzed. Each of these systems measures helmet attitude and, subsequently, tracking line of sight.

The miniature rate gyros system measures angular rates about the helmet coordinate system. The Sperry pantograph system uses direct mechanical linkage to measure four angular degrees of freedom and one linear degree of freedom. The photo-optical (Honeywell) system uses light sources and mirrors to measure helmet attitude.

Helmet-Mounted Rate Gyro Coupling System.

Error Distribution. The error distributions are shown in Table XII. These take into account only one gyro at a time and represent both fixed and dynamic errors. They were determined by analysis of existing devices and the proposed mechanization.

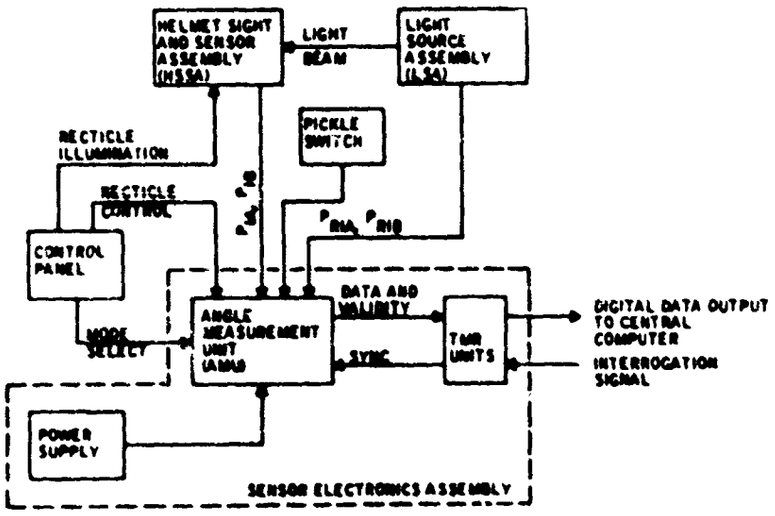

Figure 43. Honeywell System

Table XII. Error Distribution for Gyro System

Subsystem	Unit	Error (worst case)
Helmet	1. Gyro (60 deg/sec full scale including vibration)	[illegible].08 deg/sec
	Acceleration sensitive drift (input and spin axes)	±0.02 degree/g
	Scale Factor	±2.5%
	Linearity	±0.3 deg/sec
	Zero Set Stability	--------
	2. Alignment	
	Inertial Axis to Gyro Case	0.25 deg
	Gyro Case to Helmet	0.25 deg
	3. Amplifier	
	Scale Factor	±1.0%
	Linearity	±0.2%
Aircraft	1. Demodulator	
	Transfer Function (Gain)	±5%
	Linearity	±1%
	Drift Stability	------
	Zero Output	------
	2. Integrator	
	Drift	0.05%/hr
	Accuracy	±1.0%
	Linearity	±0.2%
	3. Euler Angle Computer	(Determined via Analysis)
	4. DC to AC converter	
	Transfer Function	±1%
	Linearity	±0.2%
	5. Torquer Amplifier	
	Scale Factor	±1.0%
	Linearity	±0.2%
	6. Alignment	
	Helmet to Aircraft Axis	±0.5°/axis
	7. Reset Accuracy	±0.5%

Signal Steady State Errors. No helmet or aircraft motion is assumed. The errors here are due to gyro zero set, and scale factor and linearity of gyro, preamplifier, and demodulator. Gyro zero set error, assuming the low pass filter storage bias combination will provide 6 bits of correction, is given by

$$\epsilon_{zero} = (0.08^{\circ}/\text{sec})(60\ \text{sec/min})/64 = 0.075\ \text{deg/min.}$$

Scale Factor and linearity errors are given in Table XIII. The total RSS error due to linearity is 1.06 percent, and the scale factor RSS error is 5.7 percent. The total RSS error due to linearity and scale factor is 5.8 percent.

If the assumed look angle to the target is 30 degrees in either axis, then the integrated angular error due to electrical steady state errors is given by

$$\epsilon_L = 0.058 \times 30 = 1.7^{\circ}.$$

Since this is larger than the total allowed system error, the only way to effect this type of a system is to trim the scale factor of each unit such that the overall scale factor is the order of 1 percent. The total RSS error due to scale factor and linearity then becomes 1.4 percent, and the error due to steady state components for a 30 degree look angle in azimuth or elevation is

$$\epsilon_L = 0.42\ \text{degrees.}$$

Alternately, if it is assumed that the system (helmet and aircraft) can be normalized sometime prior to a target sighting, then errors

Table XIII. Scale Factor and Linearity Errors

Device	Scale Factor	Linearity
Gyro	2.5%	0.3%
Demodulator	5.0%	1.0%
Amplifier	1.0%	0.2%
RSS Total	5.7%	1.06%

generated at 30 degrees elevation and 60 degrees azimuth (worst case measurements) would be

$$\epsilon_{\mu max} = 0.014 \times 60 = 0.84 \text{ degrees}$$

$$\epsilon_{\eta max} = 0.014 \times 30 = 0.42 \text{ degrees.}$$

Errors Due to Mechanical Misalignment. Mechanical misalignment results in two types of error. First, the actual input is reduced by the cosine of the misalignment angle in one axis and is increased by the sine of the misalignment angle in the other axis (azimuth and elevation). Secondly, the sine of this angle generates cross coupling between axes. Since the first error is small with respect to scale factor errors, it is neglected in this analysis. For condition A, the error is

$$\epsilon_{CC_{30}} = 0.54 \text{ degrees.}$$

For condition B the errors are

Pitch: $\epsilon_{CC_y} = 1.08$ degrees

Yaw: $\epsilon_{CC_\mu} = 0.54$ degrees.

Acceleration Generated Errors. To determine worst case acceleration errors, it was assumed that worst case constituted 45 degrees roll and 30-g-seconds net during any one period. Since the acceleration sensitive drift is 0.02 deg/sec/g (Table XII), the error is

$$\epsilon_A = 0.02 \times 30 \times \sin 45^\circ = 0.42^\circ.$$

Total Errors at Integrator Input. These errors are shown in Table XIV. For condition A (system normalized after target sighting), the total RSS system error at the integrator input for a 30° angle in azimuth or elevation is

$$E_{tot_A} = 0.69 \text{ degree.}$$

Table XIV. Total Errors at Integrator Input

Source	Error (deg)	
Case A	(Azimuth and Elevation)	
Steady State (30 sec)	0.037	
Scale Factor and Linearity	0.42	
Mechanical Misalignment	0.54	
Total RSS Error	0.69	
Case B	Elevation	Azimuth
Steady State (5 min)	0.38	0.38
Scale Factor and Linearity	1.26	0.84
Acceleration	0.42	0.42
Mechanical Misalignment	1.62	1.08
Total RSS Error	2.13	1.48

For condition B (system normalized before but within 5 minutes of target detection), the RSS system error for angles of 60° and 30° (worst case), respectively, is

$$\epsilon_{tot_{elev}} = 2.13^{\circ}$$

$$\epsilon_{tot_{az}} = 1.48^{\circ}.$$

Since these errors are greater than the ±10 milliradians (0.58°) allowable for system error, and since integrator, Euler angle computer, and torquing amplifiers were not considered, this system was not deemed feasible for continuing analysis.

Other System Errors. Before termination of this section, several statements regarding other errors and sensitivities should be noted. Euler angle computation is a necessary part of this scheme. Such computation is necessary because of the three degree-of-freedom of head motion used to point the helmet along a two degree-of-freedom

vector in space. The ability to roll the head about the aircraft coordinate system forces some sort of transformation between head attitude and aircraft coordinate system. The resulting line of sight in azimuth and elevation is measured by determining the direction of the head, i.e., the transformation between the head i vector and the aircraft coordinate frame. Errors in the gyros, alignment, and amplifiers located before the integrators in the system will then be spread into all three axes in the Euler angle computer and appear in the computed azimuth and elevation angles. To these must be added the errors in computation of azimuth and elevation angles and gyro torquing amplifier errors.

To overcome the excessive errors developed here, attitude gyros of a type whose accuracy is comparable to body mounted attitude gyros used in strapped-down attitude reference systems would have to be developed. The goal of such a design is to successfully miniaturize the gyros for mounting on a helmet without loss of attitude accuracy. Along with gain in accuracy, dynamic error caused by the three integrators would be eliminated. However, mounting errors would still play a significant role in such a system.

Mechanical Linkage (Pantograph) System. Errors in pantograph linkage system can be attributed to three sources:

1. Linkage errors,
2. Helmet-to-aircraft coordinate transformation errors, and
3. Installation errors.

An error analysis was performed at Sperry (Univac) by physical measurement of errors in the pantograph and theoretical errors in the coordinate transformation device.

Installation Errors. These errors are determined by physical alignment of the reticle in the sighting device with the receptacle at the rear of the helmet. This was determined to be adjustable to within 2 milliradians by the manufacturer.

Pantograph (Linkage) Errors. The linkage contains four resolvers. Measurement of positioning data was made via theodolite and a special test fixture. To facilitate the reading of the angles resulting from positioning the theodolite to some angular position in space, two follow-up servos were used to duplicate the deflection and elevation sighting angles. They in turn positioned dials from which the linkage elevation and deflection angles were read. Inaccuracies of the theodolite, linkage adapter, and follow-up servos are inherently included in the data.

The volume of space in which the linkage can operate is quite large. For instance, a longitudinal movement equal to the length of the linkage rails is possible. Lateral movements equal to the length of the linkage arm and verticle movements equal to the length of the arm are possible. To obtain a measure of accuracy for a typical volume of space, the theodolite was positioned to five different locations. Figure 44 indicates the relative positions of the theodolite.

The standard deviation for any angular position within the volume was calculated to be

$$\sigma_{Linkage} = \left[\frac{\sum_{i=1}^{n} (X_i - \bar{X})^2}{n-1} \right]^{1/2} = 3.95 \text{ mils}$$

Computer Errors. The only error considered here was analog to digital conversion error, since errors due to computation are included in the pantograph system test fixtures. The analog to digital converter has a 13 bit register with a 3σ accuracy equal to 0.1 percent of full scale, ± 1 bit truncation. The deflection register will have a full scale value proportional to 90 degrees or 1600 mils, therefore,

$$(0.1\%)\ (1600 \text{ mils}) = 1.6 \text{ mils and}$$

$$\sigma_{A\text{-}D \text{ converter}} = 0.533 \text{ mils} \pm 1 \text{ bit.}$$

The least significant bit has a value of (1/4096) (1600 mils) = 0.392 mils if one bit is reserved for the sign of the angle, hence,

$$\sigma_{A\text{-}D \text{ converter}} = 0.533 + 0.392 = 0.925 \text{ mils, and}$$

$$\bar{X}_{A\text{-}D \text{ converter}} = 0.$$

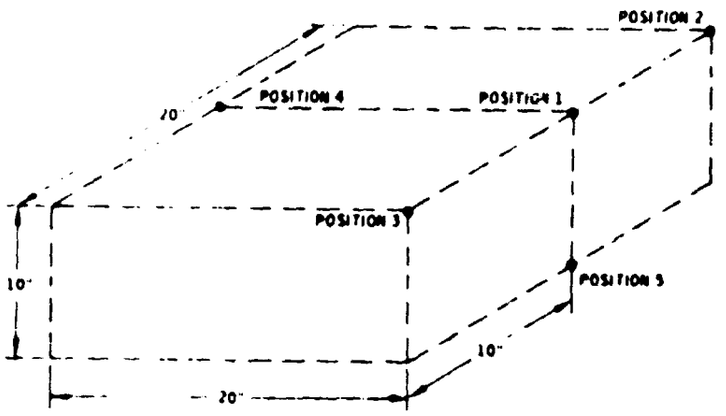

Figure 44. Volume of Space for Sighting Operation

Total System Errors. Combining all these deviations, we can find the total system standard deviation. This represents the RMS error of the Sperry helmet sight system as follows:

$$\sigma^2 \text{Total} = \sigma^2_{A-D} + \sigma^2 \text{ Installation} + \sigma^2 \text{ Linkage},$$

$$= (0.925)^2 + (2.0)^2 + (3.95)^2, \text{ and}$$

$$\sigma \text{ Total} = 5.44 \text{ Milliradians}$$

Light Source and Sensor System

Introduction. This section deals with the error analysis of the Honeywell helmet sight concept. It has been abstracted from Honeywell Document 12536-05-046-001-D(A) — an error analysis which was developed for Lockheed, California Company as a portion of Honeywell's work on the Cheyenne helicopter helmet sight. Although the helmet sight concept has evolved since this analysis was made, it is felt that hardware changes since that time do not significantly alter the error analysis. This analysis includes errors contributed by both coupling and sight devices.

Figure 45 shows the helmet sight system and its five major subsystems:

1. Man,
2. Helmet Sight and Sensor Assembly (HSSA),
3. Light Source Assembly (LSA),
4. Sensor Electronics Assembly (SEA), and
5. Angle Conversion Unit (ACU).

The design specification for the system requires that the static error of the azimuth and elevation angle outputs, in aircraft axes, shall not exceed ±10 mrad. The error budget for the system has been set as follows:

HSSA	3 mrad.
LSA	
Internal Errors	9 mrad.

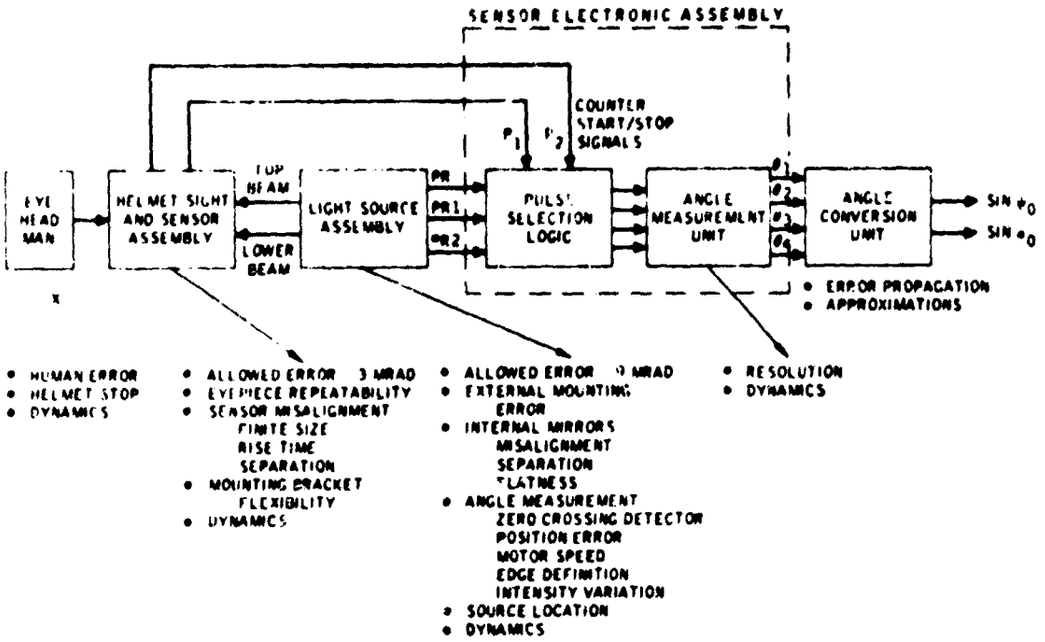

Figure 45. Error Sources in Helmet Sight System

External Errors	1.5 mrad./axis
Second Order Effects	2.5 mrad.

Helmet Sight and Sensor Assembly Errors. The HSSA errors are two-fold:

1. Mechanical repeatability error associated with unstowing the reticle projection combiner and

2. Sensor position error due to misalignment between eyepiece line of sight and $\vec{S}$ vector (see Figure 46).

Repeatability error is a function of the snap-to-fit tolerance of the combiner relative to the helmet sight bracket. The resulting error is defined as

$$\Delta\alpha = \frac{\Delta h}{h} \quad \Delta\psi = \frac{\Delta w}{w}.$$

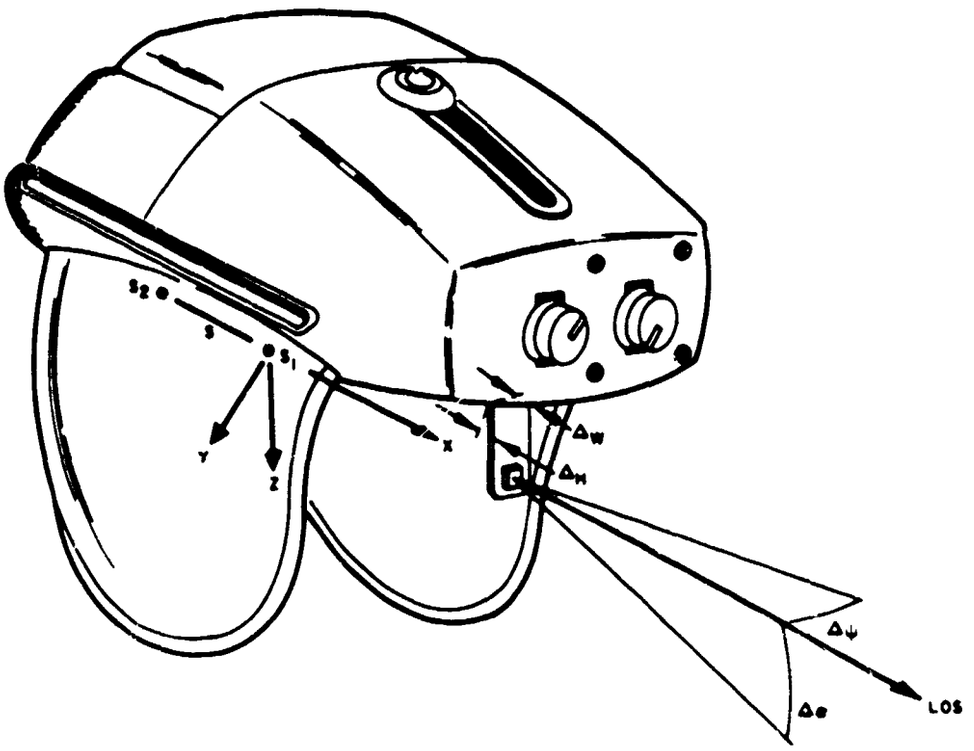

Figure 46. Eyepiece Alignment

If h = 2", w = 0.5", and a 1 mil maximum error is desired, then tolerances on h and w are 0.002" and 0.0005", respectively. Note that increasing h and w decrease the repeatability error.

Sensor position error depends on finding the active centers of the photo sensors. The magnitude of the error is the positional tolerance divided by the distance between the photo sensors. That is,

$$\Delta\alpha = \frac{\Delta Z}{S} + \frac{\Delta X}{2S} a^{1} \qquad \Delta\psi = \frac{\Delta Y}{S} + \frac{\Delta X}{2S \cos\alpha} b^{1}.$$

where

$$\sin\alpha = \frac{K}{2S} a^{1} \quad \text{and} \quad \sin\psi = \frac{K}{2S \cos\alpha} b^{1}.$$

Note that increasing sensor separation S decreases sensor position error. As an example, if sensor separation S = 8", $\alpha = 30^\circ$, $\psi = 30^\circ$, and location of active element and mounting accuracy = 0.008" in each direction,

$$\Delta\alpha = \frac{0.008''}{8''} + \frac{0.008''}{2 \times 8''} = 0.001'' + 0.0005'' = 1.5 \text{ mil}$$

$$\Delta\psi = \frac{0.008''}{8''} + \frac{0.008''}{2 \times 8'' \times \cos 30^\circ} = 0.001'' + 0.0057''$$

$$= 1.57 \text{ mil.}$$

Light Source Assembly Errors. The LSA provides the reference between aircraft axes and the pilot's line of sight. LSA errors are two-fold:

1. External mounting error due to misalignment between aircraft axes and intended location of the LSA and

2. Internal LSA error due to mirror alignment error (highly critical), angle measurement error, and source location error.

In Figure 47, axis Z is vertical and in the plane of the rotating lights. Axis Y is at the midpoint between and parallel to the axes of the rotating lights. Axis X is perpendicular to the Y-Z plane and is at the intersection of the Y and Z axes.

Recall that the maximum alignment error is 1.5 mrad about each axis, yielding a one-sigma error of 0.5 mrad. The one-sigma errors in ψ and α due to alignment errors about each axis of the LSA are

Angular error about Z axis:

$$\Delta\psi_{1\sigma} = 0.5 \text{ mrad.}$$

$$\Delta\alpha_{1\sigma} = 0$$

Angular error about Y axis:

$$\Delta\psi_{1\sigma} = 0$$

$$\Delta\psi_{1\sigma} = 0.5 \left|1 - \cos(\psi + 45)\right| \text{ mrad.}$$

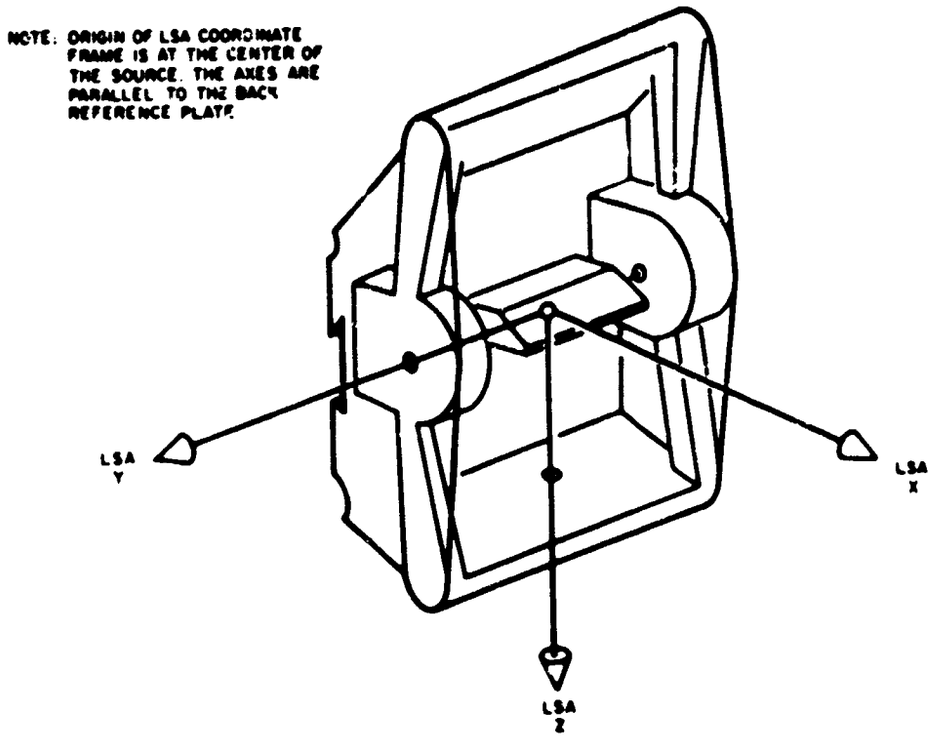

Figure 47. LSA Coordinator

Angular error about X axis:

$$\Delta_1 = 0$$

$$\Delta_1 = 0.5 \text{ Cos } (\quad + 45) \text{ mrad.}$$

Internal LSA errors arise from the manufacturing process and are basically due to errors in mirror alignment, angle measurement, and source location.

The mirror alignment errors is the Achilles Heel of the helmet sight system, based on realizable tolerances. Mirror errors are defined in terms of a rotation from the mirror normal as shown in Figure 48 where.

ANGX = misalignment to top mirror about axis between -Z and +X,

ANGY = misalignment to top mirror about LSA Y-axis,

EXXX = misalignment of bottom mirror about axis between, and -X and -Z

EYYY = misalignment of bottom mirror about LSA Y-axis.

These rotations are measured about the center point of the mirror which are directly in line with the light beam when the motor is at zero angle. These mirror errors arise during manufacturing due to indexing from the LSA reference surface to obtain the 45° mirror angle. This corresponds to errors ANGY and EYYY of the top and bottom mirrors. Angular errors ANGX and EXXX of these mirrors arise due to the run-out of the machine as it makes a traverse cut along the Y axis.

Angular measurement errors are random, and their effect upon system accuracy is dependent on the cockpit configuration. These errors are due to uncertainties in the LSA motor speed, finite detector size, variations in rise time, variations in light beam edge definition, and variation in mirror surfaces. Error sensitivity expressions relating ψ and α to θ_1, θ_2, θ_3, θ_4 (angles between LSA reference axis

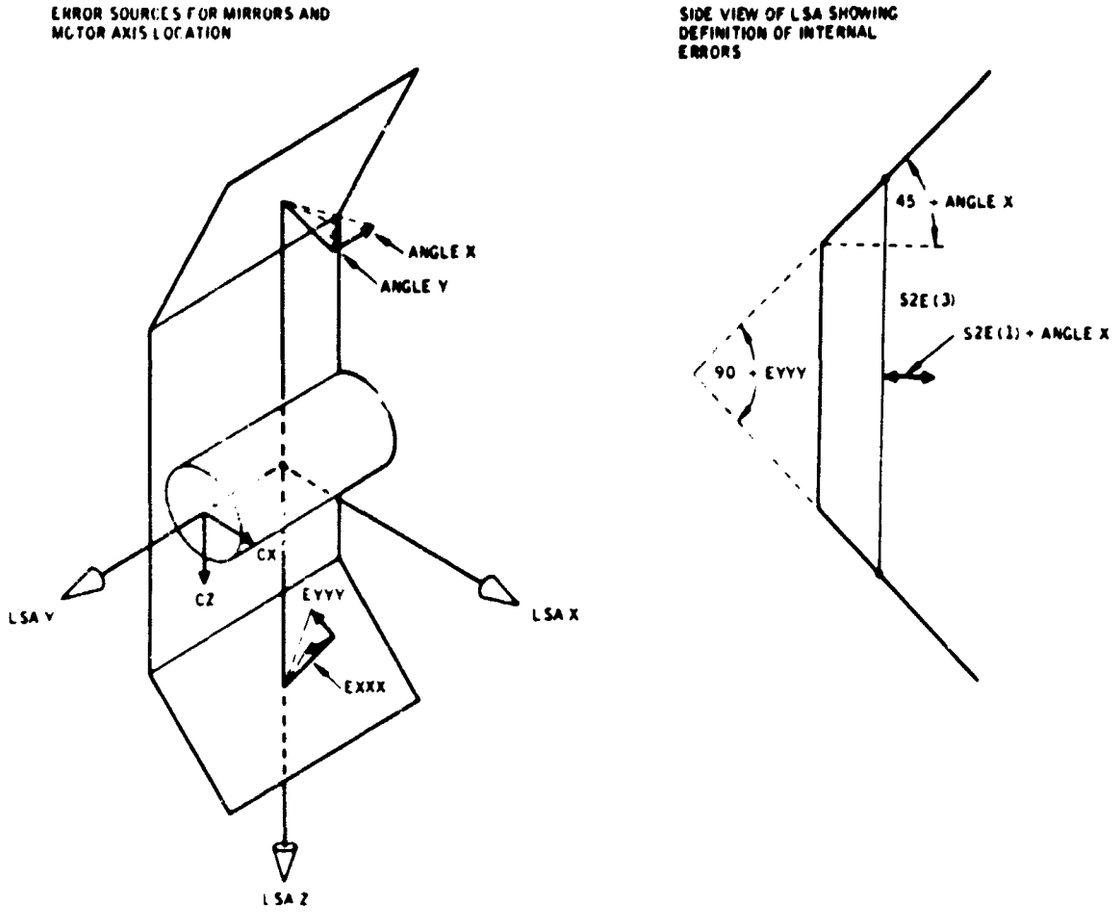

Figure 48. Error Sources for Mirrors and Motor Axis Location

and HSSA photo sensors) may be obtained by partial differentiation which yields:

$$\Delta\alpha\theta_1 = \left[\frac{A^2 \tan \theta_3}{KS \cos \alpha}\right] \Delta\theta_1 .$$

$$\Delta\alpha\theta_2 = \left[\frac{-B^2 \tan \theta_4}{KS \cos \alpha}\right] \Delta\theta_2 .$$

$$\Delta\alpha\theta_3 = \left[\frac{-C^2 \tan \theta_1}{KS \cos \alpha}\right] \Delta\theta_3 .$$

$$\Delta\alpha\theta_4 = \left[\frac{D^2 \tan \theta_2}{KS \cos \alpha}\right] \Delta\theta_4 ,$$

$$\Delta\psi_{\theta_1} = \frac{A^2}{KS \cos \alpha} \left[\frac{-1}{\cos\psi} + \tan \psi \tan \alpha \tan \theta_3\right] \Delta\theta_1 ,$$

$$\Delta\psi_{\theta_2} = \frac{B^2}{KS \cos \alpha} \left[\frac{1}{\cos \psi} - \tan \psi \tan \alpha \tan \theta_4\right] \Delta\theta_2 ,$$

$$\Delta\psi_{\theta_3} = \frac{C^2}{KS \cos \alpha} \left[\frac{1}{\cos \psi} - \tan \psi \tan \alpha \tan \theta_1\right] \Delta\theta_3, \text{ and}$$

$$\Delta\psi_{\theta_4} = \frac{D^2}{KS \cos \alpha} \left[\frac{-1}{\cos \psi} + \tan \psi \tan \alpha \tan \theta_2\right] \Delta\theta_4 ,$$

where A and B are the distance from the lower light source to the fore and aft photo sensors, respectively, and C and D are the distances from the upper light dource to the fore and aft photo detectors, respectively. Note that decreasing the light source distance to the helmet (A, B, C, D) decreased angular measurement error.

Laboratory experiments have shown one-sigma error on $\Delta\theta_1 = \Delta\theta_2 = \Delta\theta_3 = \Delta\theta_4 = 0.408$ mrad. The above equations were evaluated for K = 6", S = 8", $0 \leq \psi \leq 90^\circ$, and the results are shown in Figure 49.

The last major LSA contributor is the source locatic error, which is the error in locating the motor axis. An error in locating the motor axis by an amount CX along the LSA X-axis (Figure 50) results in an error of 2 CX, i.e.,

$$K^1 = 2\,CX + K.$$

The system error is then

$$\Delta = \frac{2\,CX\,\alpha}{K}$$

$$\Delta = \frac{2\,CX\,\psi}{K}$$

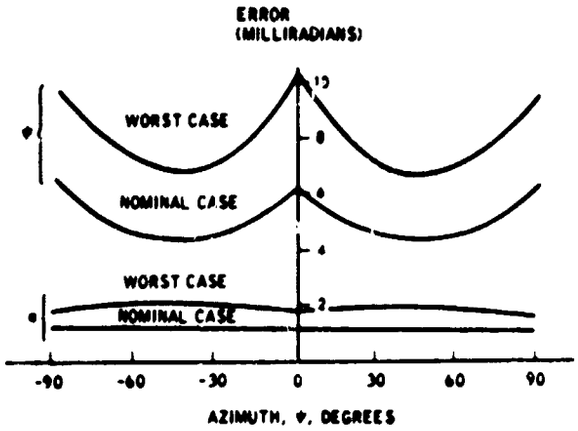

Figure 49. Error Equation Solution

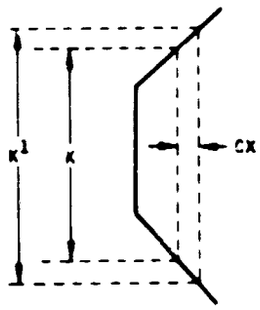

Figure 50. LSA Side View

If the motor axis is positioned along the LSA Z-axis, such that the motor is not centered between the two mirrors, the effect is equivalent to a misalignment of the LSA about its Y-axis. This misalignment is an angle equal to 2 CZ/K and results from the position error of the virtual sources.

A simulated LSA error model has been analyzed by Honeywell. Table XV gives the error coefficients used in the analysis.

The elevation error for the various error sources is

$$\Delta\alpha = \left(-0.1 + 0.135\,\frac{\psi}{45}\right) SX - 0.675\left(\frac{\psi - 45}{45}\right) SY$$

$$+ \left[-0.4 + 0.3\,\frac{\alpha}{30}\left(\frac{\psi - 45}{45}\right)\right] AX - 1.35\left(\frac{\psi - 45}{45}\right) AY$$

$$+ \left[0.4 + 0.4\,\frac{\alpha}{30}\left(\frac{\psi - 45}{45}\right)\right] EX$$

Table XV. Designation of Error Sources

Name	Corre-sponding Coefficient	Error Source
CX	Y_1	LSA lens holder position error in X
HEP	Y_2	Human error in pitch
HEY	Y_3	Human error in yaw
EPMP	Y_4	Eyepiece in pitch
EPMY	Y_5	Eyepiece repeatability in yaw
ANGX	Y_6	Top mirror misalignment about LSA X-axis
ANGY	Y_7	Top mirror misalignment about LSA Y-axis
EXXX	Y_9	Bottom mirror misalignment about LSA X and Z axis
EYYY	Y_{10}	Bottom mirror misalignment about LSA Y axis
S1E(1)	Y_{12}	Sensor 1 mechanical position error in X
S1E(2)	Y_{13}	Sensor 1 mechanical position error in Y
S1E(3)	Y_{14}	Sensor 1 mechanical position error in Z
S2E (1)	Y_{15}	Source location error in X
S2E (2)	Y_{16}	Source location error in Y
S2E (3)	Y_{17}	Source location error in Z
SAXX	Y_{18}	LSA misalignment about X axis
SAYY	Y_{19}	LSA misalignment about Y axis
SAZZ	Y_{20}	LSA misalignment about Z axis
FLASE	Y_{21}	LSA motor speed error
COMPE	Y_{22}	Computer truncation error
ZCD	Y_{23}	Zero reference detector position error

$$+\left[0.3 - 2.25\,\frac{\alpha}{30} - 0.78\left(\frac{\psi - 45}{45}\right)\right] EY$$

$$+ 0.48\ FLSAE + 30\left(\frac{\psi - 45}{45}\right) ZCD$$

$$+ 4\,\frac{\alpha}{30}\ CX,$$

which can be written

$$\Delta\alpha = (0.1 + 0.003\psi)\,Y_{18} - (0.675 + 0.015\psi)\,Y_{19}$$

$$+ (-0.4 - 0.01\alpha + 0.00022\alpha\psi)\,Y_6 + (1.35 - 0.03\psi)\,Y_7$$

$$+ (0.4 - 0.0133\alpha + 0.00030\alpha\psi)\,Y_9$$

$$+ (1.08 - 0.075\alpha - 0.0175\psi)\,Y_{10} + 0.48\,Y_{21}$$

$$+ (-30 + 0.667\psi)\,Y_{23}$$

$$+ 0.133\alpha\,Y_1.$$

The elevation error for the LSA is of the form

$$\Delta\alpha = X_1 + X_2\alpha + X_3\psi + X_4\alpha\psi.$$

This model can be seen to include the effects of HSSA error and SEA error. It is a complete characterization of the system azimuth error. A summary of system errors is given in Table XVI.

The azimuth error for the various LSA error sources is

$$\Delta\psi = \left[2.2 + 1.5\left(\frac{\psi - 45}{45}\right)^2\right] AX + 2.3\ \frac{\alpha}{30}\ AY$$

$$+ \left[2.4 + 1.5\left(\frac{\psi - 45}{45}\right)^2 + \frac{\alpha}{30}\left(\frac{\psi - 45}{45}\right)\right] EX$$

$$+ \left(7.6 - 7.2\ \frac{\psi}{45} + 0.9\ \frac{\alpha}{30}\right)\ EY$$

$$+ 54\left(\frac{\psi - 45}{45}\right)\ FLSAE - 4.8\ \frac{\alpha}{30}\ ZCD$$

$$+ 7.78\left(\frac{\psi - 45}{45}\right)\ CX - 0.96\ \frac{\alpha}{30}\ CZ,$$

which can be written

$$\Delta\psi = \left[2.2 + 0.00074\ \psi^2 - 0.0666\psi + 1.498\right] Y_6 + (0.076\alpha) Y_7$$

$$+ \left[2.4 + 0.00074\psi^2 - 0.666\psi + 1.498 + \frac{\alpha\psi}{1350} - 0.033\alpha\right] Y_9$$

$$+ (716 - 0.16\psi + 0.03\alpha)\ Y_{10}$$

$$+ (1.2\psi - 54) Y_{21} - 0.16\ \alpha\ (ZCD)$$

$$+ (0.173\psi - 7.785) Y_1 - 0.032\alpha\ Y_{17}.$$

The azimuth error for the LSA is of the form

$$\Delta\psi = \mu_1 + \mu_2\alpha + \mu_3\psi + \mu_4\psi^2$$

Table XVI. Summary of Accuracy Analysis

[illegible]	Error Source	Coefficient	Simulation Value	Manufacture Tolerance (1σ)	Sensitivities		System Errors (3σ)		Squares		Comment
					Elevation	Azimuth	Elevation (mr)	Azimuth (mr)	Elevation	Azimuth	
LSA	CX	γ_1	0.01 in.	0.001 in	200 mr/in	200 mr/in	0.2	0.2			Worst case
	ANGX	γ_6	0.1°	0.00008°	12 mr/deg	65 mr/deg	0.00096	0.0052	---	---	Worst case
	ANGY	γ_7	0.1°	0.017°	30 mr/deg	45 mr/deg	0.51	0.765	0.26	0.58	Worst case
	EXXX	γ_9	0.1°	0.00008°	20 mr/deg	85 mr/deg	0.0016	0.0068	---	---	Worst case
	EYYY	γ_{10}	0.1°	0.017°	60 mr/deg	160 mr/deg	1.02	2.72	1.04	7.40	Worst case
	S2E(3)	γ_{17}	0.01 in.	0.001 in.	0.0	100 mr/in	---	0.1	---	0.01	Worst case
	SAXX	γ_{18}	0.1°	0.008°	20 mr/deg	10 mr/deg	1.72	0.86	2.96	0.74	Worst case
	SAYY	γ_{19}	0.1°	0.008°	15 mr/deg	10 mr/deg	1.29	0.86	1.66	0.74	Worst case
	SAZZ	γ_{20}	0.1°	0.008°	---	20 mr/deg	---	(1.72)	---	(2.96)	Constant over (φ, ω)
	FLASE	γ_{21}	1/1000	0.15/1000	---	1.5 mr	---	(0.225)	---	---	Random error (3σ)
HSSA	EPRP	γ_4	0.1°	0.057°	17 mr/deg	---	(0.969)	---	(0.94)	---	Constant over (φ, ω)
	EPRY	γ_5	0.1°	0.057°	---	17 mr/deg	---	(0.969)	---	(0.94)	Constant over (φ, ω)
	S1E(1)	γ_{12}	0.01 in.	0.021 in.	100 mr/in	200 mr/in	2.1	4.2	4.41	17.64	Worst case
	S1E(2)	γ_{13}	0.01 in.	0.021 in.	---	150 mr/in	---	(3.15)	---	(9.92)	Constant over (φ, ω)
	S1E(3)	γ_{14}	0.01 in.	0.021 in.	150 mr/in	---	(3.15)	---	(9.92)	---	Constant over (φ, ω)
SEA	COMPE	γ_{22}	12 bits	(NA)	0.3 mr	1.0 mr	---		---	---	Not applicable for AAFNN
	ZCD	γ_{23}	0.001 in.	0.0015 in.	800 mr/in	1000 mr/in	1.2	1.[illegible]	1.44	2.25	Worst case
System Accuracy	Sum of the squares:								21.63	43.19	Random error omitted
	Total bias error by components (3σ):						4.65	6.57	64.82		
	Total radial bias error (3σ):						8.05				
Subsystem Contributions	LSA Bias Contribution						2.43	2.83			Radial Bias 3.73
	HSSA Bias Contribution						3.91	5.34			Radial Bias 6.62
	SEA Bias Contribution						1.2	1.5			Radial Bias 1.92

Sensor Electronic Assembly Error. Relative to the remainder of the system, the SEA is nearly error free. SEA errors are

1. Error in digitizing the pick-off signal and

2. Error in rounding-off computed output angle.

Errors Resulting from Use of Display or Reticle. In this section, the errors developed in pointing the helmet with reticle at the target are examined, Included in pointing errors are line of sight errors generated by the sight and human errors due to head tracking. For the sight errors, two devices were investigated - a helmet sight of the type proposed by either Honeywell or Univac and the Hughes helmet mounted display.

Helmet Mounted Reticle Errors. Errors generated in the Honeywell Helmet Sight and Sensor Assembly were discussed previously. The errors were shown to be caused by mechanical repeatability associated with unstowing the reticle projection combiner ($\Delta\alpha$) and sensor position error due to misalignment between the eyepiece line of sight and the S vector ($\Delta\psi$). Results of this analysis showed that:

$$\Delta\alpha = 1.5 \text{ milliradian and}$$

$$\Delta\psi = 1.57 \text{ milliradian.}$$

The Sperry sight reticle was not subjected to a detailed analysis. The manufacturers claim that alignment can be made to within 3 milliradians by individual adjustment of the reticle (which is focused at infinity) and another infinity focused reticle mounted on the fixture holding a magnetic latch between the linkage and the helmet.

Helmet Mounted Display Reticle Errors. In the optics design for a HMD discussed earlier, an on-axis reflective system was determined to be best. The reticle can either be permanently fixed on the eyepiece or projected on the eyepiece via the CRT and optics. Errors for sighting using either approach are of the two types seen in the reticle systems: 1) unstowing and misalignment errors and 2) parallax errors. If the reticle is fixed on the eyepiece, errors will be the same as those previously discussed. Worst case parallax errors for a displayed reticle were determined to be 1.1 milliradians for vertical error and 0.02 milliradians for horizontal errors. Using data for the Honeywell unstowing and misalignment errors, the worst case RMS errors become

$$\epsilon_{VERT} = (1.57^2 + 1.1^2)^{1/2} = 1.86 \text{ milliradians}$$

$$\epsilon_{HORIZ} = (1.57^2 + 0.02^2)^{1/2} = 1.57 \text{ milliradians}$$

Therefore, the addition of display parallax errors do not significantly contribute to overall system error. A CRT generated reticle would also incur deflection system errors.

Other Error Sources Not Covered in This Analysis

Human Tracking Error. This error source does not vary among the three techniques for angle pickoff or the two techniques for sighting. In all cases, the sight is used to position the helmet x axis along the line of sight vector to the target. Static errors contributed by helmet misfit were not studied. Helmet attitude can be picked off by any one of the three angle pickoff techniques and converted by a suitable scheme (Euler angle conversion) to aircraft coordinates. Thus, the direction of the helmet x-axis (the $\hat{i}$ unit vector) in aircraft coordinates yields azimuth (η) and elevation (ϕ) angles (see Figure 51). Human tracking error is dependent on how well the human can 1) position the helmet over the line of sight vector to a target and 2) track the target (or the line of sight vector).

This is a dynamic error dependent upon target angular rate.

Results of tracking studies are shown in Figures 52 and 53. They illustrate the relationship between radial sighting error

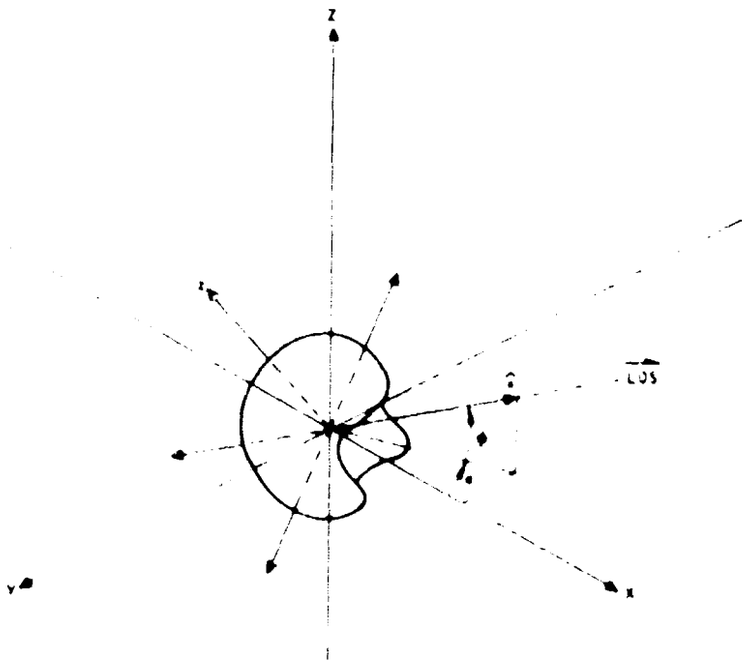

Figure 51. Helmet and Aircraft Coordinate Systems

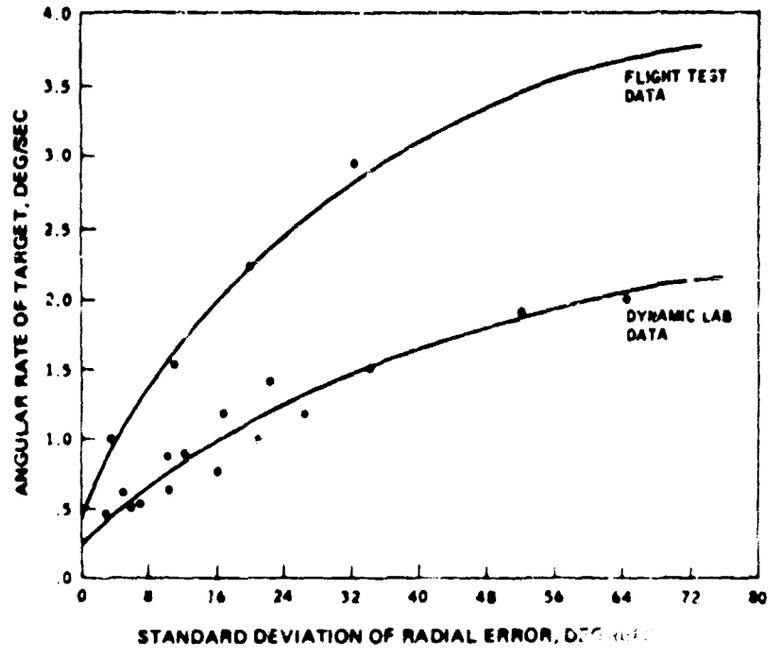

Figure 52. Sighting Error as a Funct
Target Angular Rate

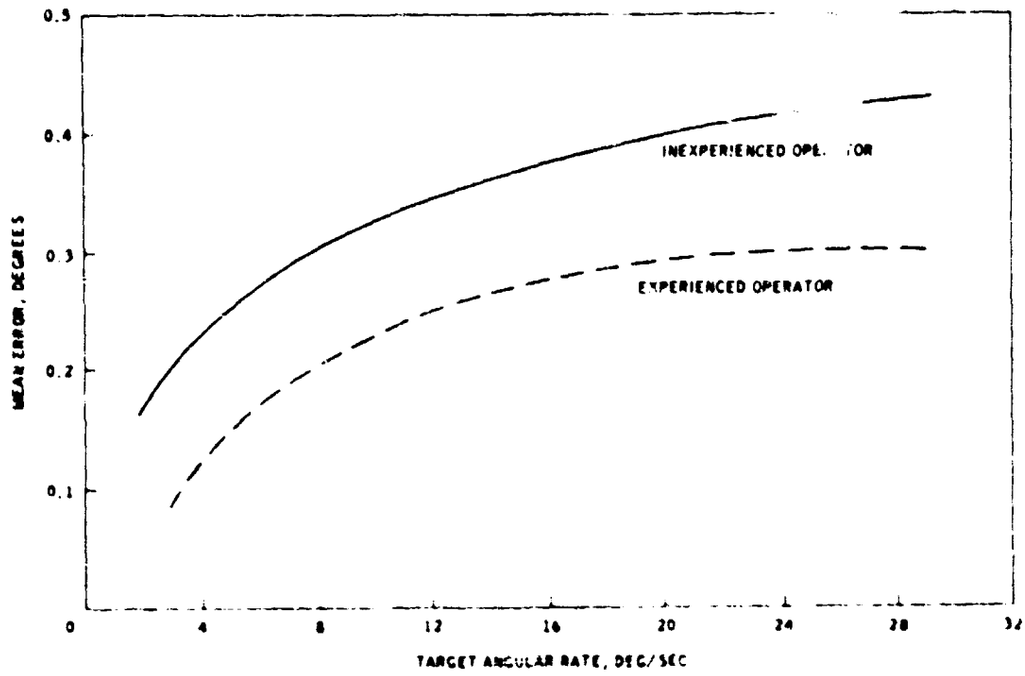

Figure 53. Helmet Sight Tracking Accuracies

and target angular rate. Figure 52 shows the degree to which results of flight test data correspond to laboratory studies. Figure 53 shows the differences between experienced and inexperienced operators. Worst case tracking error is of the order of 0.3 ±3.0 degrees. This is from flight tests with total hardware error included.

Windscreen Errors. These errors have not been investigated as windscreen data is not available for analysis.

Pointing Accuracy of Sensor Devices. Since errors generated in Euler angle conversion to azimuth and elevation were not determined for this analysis, errors of this nature are not included. Errors generated in computation of command azimuth and elevation line of sight errors for a sensor system are of two types. First, there exist errors due to computation, that is, errors arise due to roundoff of computed numbers (the choice of Euler angles sets from among the 12 possible sets and elements in the computer). Secondly, there are crosscoupling errors due to the conversion from helmet to aircraft coordinate systems. These errors depend directly upon the pick-off device used.

Results and Conclusions

Helmet Mounted Rate Gyro System. Earlier in this Section, it was shown that the system error amounted to approximately 2 degrees. This large error plus the requirement for frequent realignment of the system clearly demonstrates the impracticality of this approach when compared to the other two systems.

Pantograph Technique. The total error for the pantograph, or direct coupling, scheme is given by

$$\epsilon_{P_{tot}} = (\epsilon_{linkage} + \epsilon_{comp} + \epsilon_{installation})^{1/2}$$

$$= (3.95^2 + (0.925)^2 + 2^2)^{1/2}$$

$$= 5.44 \text{ milliradians } (1\sigma)$$

Photo Optical Technique. Taking into consideration the practical limits of mechanical tolerances, alignment accuracy, and the electronic timing and computer accuracy, the system will measure the attitude of the sight within 8.05 milliradians (3σ).

Sighting System. When sighting systems are considered with helmet attitude measurement systems, the errors are found to be similar for both the pantograph and photo-optical systems. For the pantograph technique,

$$\epsilon_{TOT} = (16.39^2 + 3^2)^{1/2} =$$

$$= 6.20 \text{ milliradians.}$$

For the Honeywell technique, the error was shown to be

$$\epsilon_{TOT} = 8.05 \text{ milliradians.}$$

Addition of a helmet mounted display adds 1.1 milliradians to the vertical axis, causing the total error to increase to

$$\epsilon_{TOT} = 8.12 \text{ milliradians.}$$

As a conclusion, the direct coupled and photo-optical systems meet the 10 milliradians requirement of the system, and selection must be based on other criteria. The results are summarized in Table XVII.

Table XVII. Error Analysis Results

System	Azimuth Error	Elevation Error
Gyro Technique	>1 degree	>1 degree
		6.20 mils
Photo-optical Technique	8.05 mils	8.05 mils
Pantograph Technique	6.20 mils	6.20 mils
Additional Error Due to Display (Parallax Only)	1.12 mils	0.02 mils

Recommendations

Of the three candidate line of sight pick-off systems investigated, the light source and sensor system is recommended. Table XVIII summarizes the relative merits of the devices considered.

The major drawback to the rate gyro system is the large error which varies with time and would require frequent reestablishment of the initial conditions. Since a gyro is referenced to the earth's gravitational field, aircraft flight parameters such as pitch, roll, and yaw must enter into the calculations which would contribute additional errors.

The mechanical linkage system developed by Sperry is simple in design and is appropriate for applications where pilot ejection from the aircraft is not a consideration (such as a helicopter). For a high performance aircraft, the linkage could constitute a severe safety hazard in the event of emergency ejection.

The light source and sensor system (Honeywell) meets the accuracy requirements, does not present a safety hazard, and is considered to be a moderate development risk system.

Table XVIII. Tradeoff Summary

Technique	Comparison Criteria							
	Offset Designation Capability, degrees	Function of Severe g Environment	Designation time, seconds	Designation accuracy, mils	Safety	Cost estimated (thousands of dollars)	Weight estimated (lb)	Development risk
Honeywell	20, +30 in elevation ±60 in azimuth	Yes	<2	-10	No hazards	8	10	Moderate
Sperry	+70, -90 in elevation ±110 in azimuth	Yes	<2	-10	Mechanical linkage may constitute safety hazard	3	6	Moderate
Gyro	Not limited by pathoff technique	Yes	<2	-35	No hazards	Not available	Not available	High

SECTION VI

RECOMMENDED HELMET MOUNTED DISPLAY/SIGHT SYSTEM DESIGN

In arriving at the optimum system configuration for a combination display and sight, the following elements must be considered:

1. CRT,
2. Optics,
3. Electrical and mechanical design, and
4. Line of sight pick-off technique.

Within each element, tradeoffs and analyses have been conducted as a means of arriving at the optimum configuration.

The recommended helmet mounted display/sight is illustrated in Figures 54 and 55. It consists of a Honeywell-type light source and sensor pickoff device for measuring the helmet line of sight, a CR 3015 CRT for the display device, and on-axis reflective optics for presenting the collimated display to the pilot. Figure 55 is an artist's conception of the physical configuration.

All of the CRTs evaluated met the basic performance requirements and were, therefore, acceptable. The CR 3015 was the only unit available with the CRT and deflection yoke potted in the shield as an integral unit. The mechanical requirements for the system make the deflection yoke size and weight as important as the CRT characteristics. On this basis, the CR 3015 was selected.

In arriving at the optimum optical configuration, primary emphasis was placed on field of view, large exit pupil, light weight, and low optical errors. The preliminary optical design indicated that the on-axis reflective type was the only approach that would fulfill all of the requirements.

Primary consideration in the selection of the line of sight pick-off technique was given to accuracy and safety. While both the Honeywell and Sperry techniques meet the accuracy requirements, it is felt that the Sperry system utilizing mechanical linkages and a bar constitute a potential safety hazard in an aircraft such as the F-15.

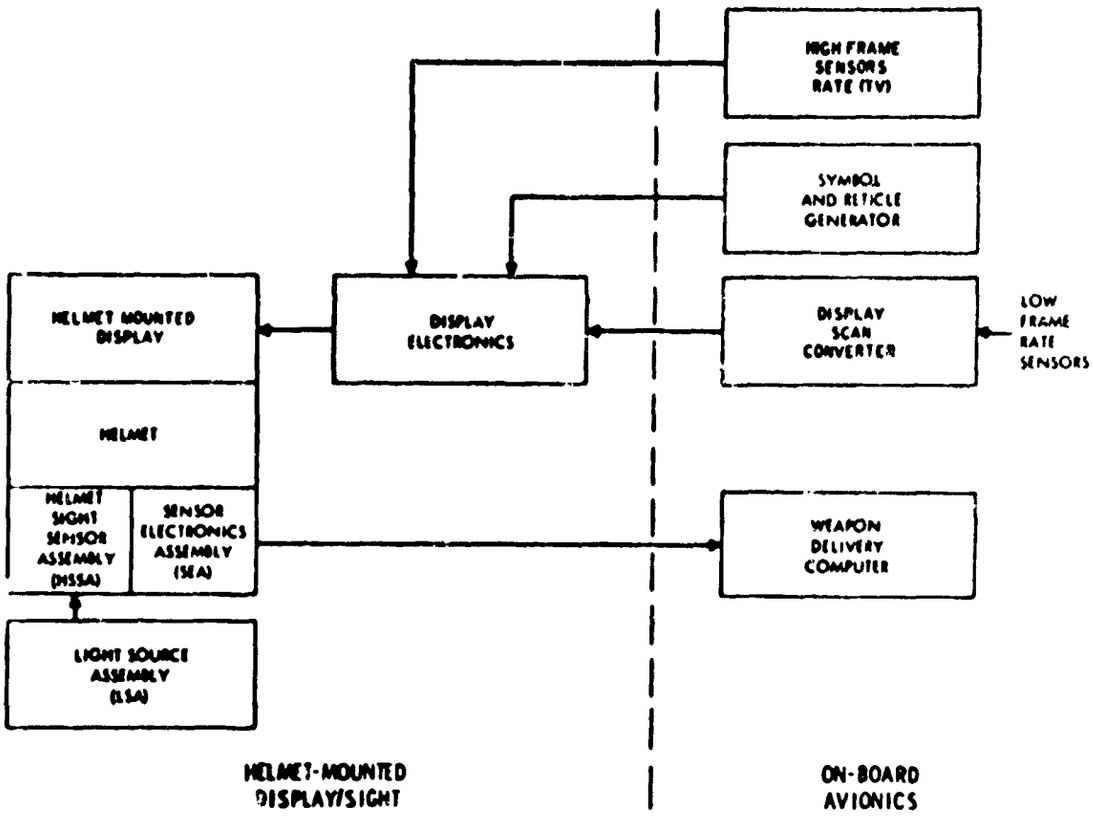

Figure 54. Block Diagram of Recommended Helmet Display/Sight System Configuration

NOT REPRODUCIBLE

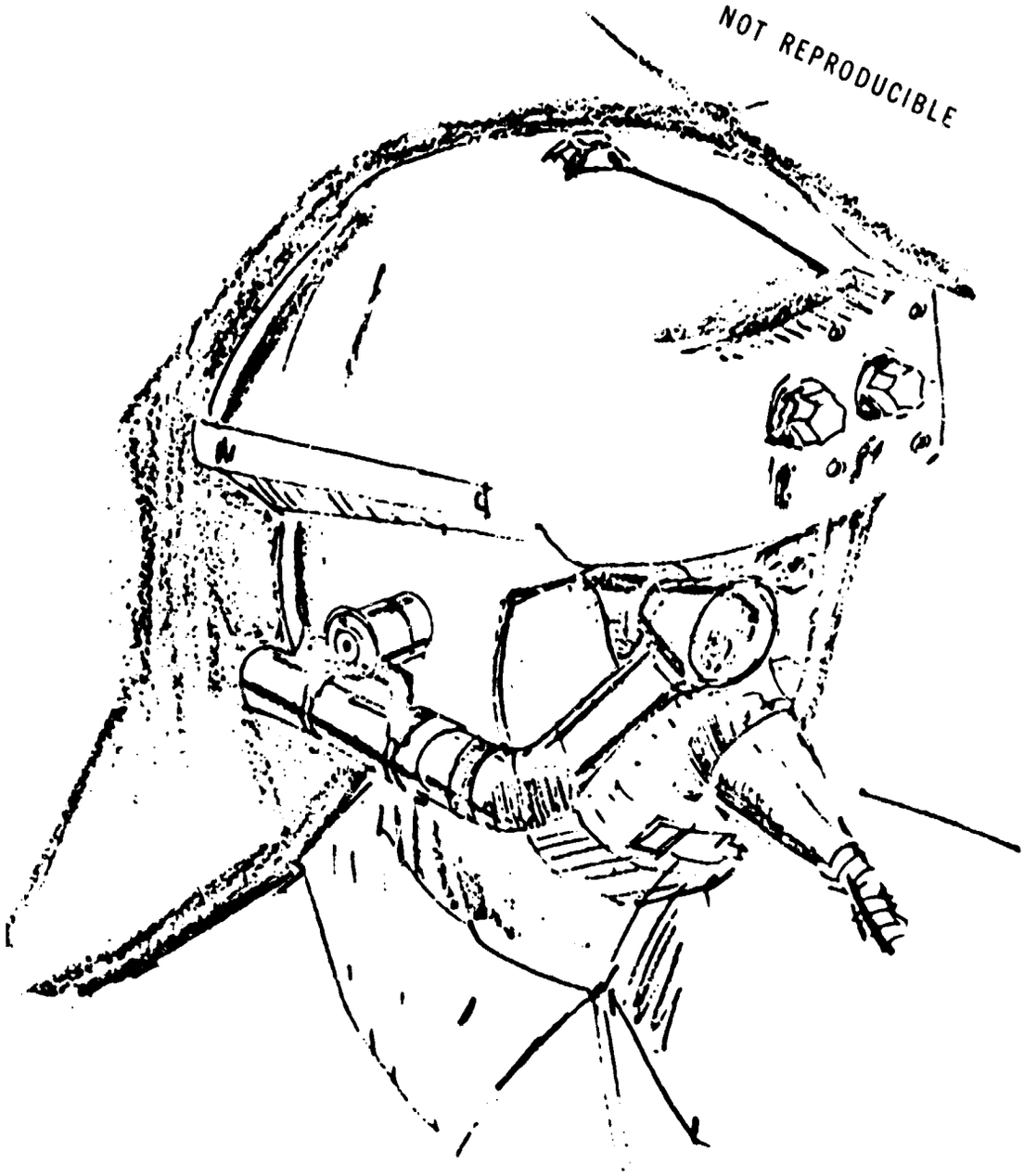

Figure 55. Recommended Helmet Display/Sight System Configuration

SECTION VII

RECOMMENDED FUTURE RESEARCH

This study has analyzed and studied general designs, applications, and problems of a helmet mounted sight/display system. The results of this work point favorably to the potential use of such a system in advanced tactical aircraft. Both the applications, analyses, and laboratory/flight test evaluations have bounded the questions which must be answered for the development of a HMD/HMS system to proceed to operational employment. The next step in research and development for such systems must evaluate specific design parameters as they relate to the projected applications. To accomplish this goal, Hughes recommends a laboratory research program which can investigate a number of parameters across a broad range of values within the context of real world tasks, and a design optimization study for HMS/HMD electrical, mechanical, and optical configuration design.

LABORATORY RESEARCH

It is recommended that the research not be tied to a specific helmet sight/display. The reason for this is that using a specific helmet display or displays would seriously limit the variables and range of values that could be studied. Furthermore, if specific displays were used, it would be extremely difficult to determine the interaction effects of the variables that need to be studied. For research of this type, the interactions are often more important than the main effects with respect to eventual system design. In order to provide the range of variables and interactions among these variables, the apparatus must provide flexibility not afforded by existing helmet mounted cathode ray tube displays.

The parameters and their range which should be studied are listed in Table VII-1. The laboratory studies would provide data to:

1. Determine HMS/HMD optimum design values,

2. Provide preliminary performance data on the use of a HMS/HMD, and

3. Evaluate basic psychological and psychophysical questions concerning the use of a HMS/HMD.

All the potential applications developed during the study (27 separate potential applications) could not be individually investigated in a laboratory research program because of the magnitude of such a program. Moreover, the program should not be specific to a particular aircraft system; it should have general application to any number of aircraft systems which could profit by a helmet sight/display system.

PRECEDING PAGE BLANK

Table XIX. Study Parameters for Recommended Laboratory Research Program

Parameter	Parameter Range	Comments
Monocular versus biocular HMS/HMD	Monocular versus biocular	Biocular may be better for low level signal detection tasks
Degree of HMD occulsion	Completely occluded to 50 percent light transmission	Optimum amount of occlusion is dependent on tube brightness and ambient light
CRT brightness	1 to 1000 ft. lamberts	
Brightness contrast	2:1 to 30:1 (Highlight brightness to black level)	Vary ambient light intensity 10,000 ft. L to 0.01 ft. L.
Gray Scale	2 to 12	Dependent on CRT brightness contrast factors
Color and color contrast	Dichroic lens effect Phosphor color	Separation of images by hue contrast may may reduce brightness contrast requirements
Depth of Focus	Collimated from ∞ to 1 ft.	May affect tendency for binocular rivalry to occur
Field of view and Magnification	25° - 60° display FOV, lower limit on magnification 0.8	Upper limit on magnification dependent on the type of task

It is, therefore, recommended that general classes of applications or tasks be studied with the parameters listed in Table XIX. These general tasks should encompass:

1. Use of the HMS as an acquisition and tracking device as for head-up air-to-air and air-to-ground acquisition.

2. Use of the HMD as a sensor display as for Walleye and Maverick TV display.

3. Use of the HMD as an information display as for tactical electronic warfare data display or a chart/map information display, and

4. Use of a combined HMS/HMD as a sensor pointing device and sensor display as for low altitude navigation and landing using FLIR or TV, or as for Maverick weapon delivery.

The recommended laboratory research would provide basic design and system capability data for general applications. This research should be followed by a second research program using specific HMS/HMD equipment based on the design data developed in the first program. The objective of the second research phase would be to evaluate particular HMS/HMD designs for specific advanced tactical aircraft system tasks. Finally, selected design(s) should be subjected to flight test evaluation for final verification and collection of performance data in the actual operational environment.

DESIGN OPTIMIZATION

As a result of the analysis and tradeoffs, a recommended design approach has been presented. While a preliminary design does exist, it remains to be optimized for maximum performance and suitable mechanical configuration. In particular, the areas that require a more detail design for the purpose of optimization are 1) optics, 2) exit pupil, 3) distribution of the weight, 4) latching device, and 5) retraction device. The interplay of the mechanical, optical, and human elements must result in a final configuration which has minimum weight, minimum complexity, minimum adjustments, and maximum utility.

REFERENCES

Lokander, I., Pupillographic recording in stereoscopically induced perceptual conflict. Percept. Mot. Skills, 1967, 24, 1031-1037.

Bouman, M.A., On foveal and peripheral interaction in binocular vision. Optica Acta, 1955, 1, 177-183.

Broadbent, D.E., Perception and communication. London: Pergamon, 1958.

Carel, W.L., Visual Factors in the Contact Analog: Summary 1961. August 1961, General Electric Company, Light Military Electronics Dept., Advanced Electronics Center.

Cherry, E.C., On human communication. London, 1954.

Crawford, B.H., Ocular interaction in its relation to measurements of brightness thresholds. Proc. Roy. Soc., Senes B, 1940, 128, 552-559.

Fedderson, W.E., Simulation Evaluation of a Head Mounted Orientation Display. Technical Data Report: No. D 228-421-012, May, 1962, Bell Helicopter Co., Fort Worth, Texas.

Fox, R. and Check, R., Detection of motion during binocular rivalry suppression. J. Exp. Psychol., 1968, 78, 388-395.

Hall, R.J. and Miller, J.W., Feasibility Study for a Monocular Head-Mounted Display. Special Technical Document SD 60-70, Sept. 10, 1960, Hughes Aircraft Co.

Hall, R.J., Hughes Aircraft Co., Miller, J.W., Office of Naval Research and Denis R. Musselman, Humboldt State College, Applications of Head-Worn Displays to Specialized Display Systems. 1960, Internal Document.

Hall, R.J. and Miller, J.W., Head Mounted Electrocular Display: A New Display Concept for Specialized Environments. Aerospace Medicine, Vol. 34, No. 4, April 1963.

Levelt, W.J.M., On binocular rivalry. The Hague: Mouton, 1968.

Ogle, K.N., Researches in binocular vision. London: Philadelphia, 1950.

Roberts, L.G., Picture coding using pseudo-random noise. IRE Transactions Info. Theory, 1962, 8, 145-154.

PRECEDING PAGE BLANK

Roscoe, S. N., Hasler, S. G. and Dougherty, Dora J., Flight by periscope: Making takeoffs and landings; the influence of image magnification, practice, and various conditions of flight. Human Factors, 1966, 8, 13-40.

Synder, H. L., Ungar, M. D. and Sweeney, J. S., A Comparison of Joy Stick and Helmet Mounted Control Systems for Pursuit Tracking. Autonetics, A Division of NAA, Inc., Technical Session Proceedings 3rd National Symposium on Information Display, Society for Information Display, pp 122-134, San Diego, Calif., February, 1964.

A Study of Crew Utilization for Multimission Fighter/Attach Aircraft. Phase II, Parts B and C, Final Report, Training Manual for Simulator Operational Procedures and Subsystem Management, Boeing Company Document D6-53565. May 1968. (Confidential)

A Study of Crew Utilization for Multimission Fighter/Attach Aircraft. Phase II, Part C, Final Report, VFR Multimission Flight Simulator Tests, Boeing Company Document D6-53564, May 24, 1967 (Confidential).

Comparison of F-15/F-105/F-106 Weapon System Operations. Hughes Aircraft Company, 9 May 1969 (Unclassified)

Crew Utilization Multimission Fighter/Attach Aircraft. Phase II, Part A, Final Report, Volume I, Cockpit and Avionics Improvement Analysis, Boeing Company Document D6-60059-1, March 15, 1967 (Confidential)

F-X Final Report, Volume 5, Avionics System Design, Book 5-Controls and Displays. Hughes Aircraft Company. 68 (21) - 4135/B4806, April 1968. (Secret)

Head Movement Trains Helicopter Guns. Aviation Week and Space Technology, July 4, 1966, pp 59-59.

One-Man Crew Effectiveness Study for F-X, North American Aviation, Inc. Autonetics Division, C7-2002/120, August 21, 1967 (Secret)

Simulation evaluation of a head mounted orientation display. Bell Helicopter Co., Report No. D228-421-012, May, 1962. Army-Navy Instrumentation Program.

INDEX TO HUGHES PHOTO NUMBERS

Figure	Photo Numbers
1	4R08603
2	4R09567
17	4R06836
20	4R09567
21	4R08604
22	4R08603
23	4R09566
24	4R09570
25	4R04846
35	4R04935
36	4R04933
37	4R04932
38	4R04931
39	4R04928
40	4R04927