UNCLASSIFIED

AD NUMBER
AD876371
LIMITATION CHANGES
TO: **Approved for public release; distribution is unlimited.**
FROM: **Distribution authorized to U.S. Gov't. agencies and their contractors; Critical Technology; SEP 1970. Other requests shall be referred to U.S. Army Aviation Materiel Laboratories Fort Eustis, VA. This document contains export-controlled technical data.**
AUTHORITY
USAAMRDL ltr, 23 Jun 1971

THIS PAGE IS UNCLASSIFIED

AD

AD876371

AD No.

DDC FILE COPY

USAAVLABS TECHNICAL REPORT 70-29

TOWARD AN ENGINEERING THEORY FOR ADHESIVE JOINTS

By

James Taylor Vaughan, Jr.

Lawrence W. Rehfield

September 1970

U. S. ARMY AVIATION MATERIEL LABORATORIES
FORT EUSTIS, VIRGINIA

CONTRACT DAAJ02-68-C-0035
GEORGIA INSTITUTE OF TECHNOLOGY
UNDER SUBCONTRACT TO
STANFORD UNIVERSITY
STANFORD, CALIFORNIA

This document is subject to special export controls, and each transmittal to foreign governments or foreign nationals may be made only with prior approval of U.S. Army Aviation Materiel Laboratories, Fort Eustis, Virginia 23604.

U. S. ARMY MATERIEL COMMAND

DDC
RECEIVED
NOV 5 1970
B

33

DISCLAIMERS

The findings in this report are not to be construed as an official Department of the Army position unless so designated by other authorized documents.

When Government drawings, specifications, or other data are used for any purpose other than in connection with a definitely related Government procurement operation, the United States Government thereby incurs no responsibility nor any obligation whatsoever; and the fact that the Government may have formulated, furnished, or in any way supplied the said drawings, specifications, or other data is not to be regarded by implication or otherwise as in any manner licensing the holder or any other person or corporation, or conveying any rights or permission, to manufacture, use, or sell any patented invention that may in any way be related thereto.

DISPOSITION INSTRUCTIONS

Destroy this report when no longer needed. Do not return it to the originator.

ACCESSION for
CFSTI WHITE SECTION
DDC BUFF SECTION
UNANNOUNCED
JUSTIFICATION
BY
DISTRIBUTION/AVAILABILITY CODES
DIST. AVAIL. and/or SPECIAL
2

DEPARTMENT OF THE ARMY
HEADQUARTERS US ARMY AVIATION MATERIEL LABORATORIES
FORT EUSTIS, VIRGINIA 23604

This program was carried out under Contract DAAJ02-68-C-0035, with the Georgia Institute of Technology as subcontractor to Stanford University.

The research was directed toward the development of an engineering theory for the analysis of adhesive joints. Adhesive lap joints are analyzed using the principle of minimum complementary energy to develop the governing equations.

The report has been reviewed by the U.S. Army Aviation Materiel Laboratories, and the approach to the development of the theory is considered to be sound. The report is published for the exchange of information and the stimulation of future research.

Task 1F162204A17002
Contract DAAJ02-68-C-0035
USAAVLABS Technical Report 70-29
September 1970

TOWARD AN ENGINEERING THEORY FOR ADHESIVE JOINTS

By

James Taylor Vaughan, Jr.
Lawrence W. Rehfield

Prepared by
School of Aerospace Engineering
Georgia Institute of Technology
Atlanta, Georgia

Under Subcontract to
Department of Aeronautics and Astronautics
Stanford University
Stanford, California

for
U. S. ARMY AVIATION MATERIEL LABORATORIES
FORT EUSTIS, VIRGINIA

This document is subject to special export controls, and each transmittal to foreign governments or foreign nationals may be made only with prior approval of U. S. Army Aviation Materiel Laboratories, Fort Eustis, Virginia 23604.

ABSTRACT

The development of high-strength structural adhesives has created many new uses for adhesive joints and established a need for additional theoretical and experimental study. An adhesive lap joint is analyzed, taking advantage of its similarity to a sandwich structure for which an established theory exists. The principle of minimum complementary energy is used to develop the governing equations, which are equivalent to a single differential equation of eighth order. Included in the complementary energy expression are contributions due to shear and normal stresses in the adhesive layer and due to shear, axial, bending, and normal stresses in the adherend.

FOREWORD

The work reported herein was authorized by DA Task 1F162204A17002, "Stress Analysis, Failure, and Design Criteria for Dynamically and Statically Loaded Structures."

The authors are indebted to Professor Wilfred H. Horton for assistance and advice received during the course of this work.

TABLE OF CONTENTS

	Page
ABSTRACT	iii
FOREWORD	v
LIST OF SYMBOLS	viii
INTRODUCTION	1
ANALYSIS	3
FORMULATION OF THE PROBLEM	3
Adhesive Layer	3
Adherend	5
THE ENERGY EXPRESSION	5
GOVERNING EQUATIONS	9
DISCUSSION	11
CONCLUSIONS	12
LITERATURE CITED	13
APPENDIXES:	
I. DERIVATION OF COMPLEMENTARY ENERGY EXPRESSION	15
II. REDUCTION OF INDEPENDENT GOVERNING EQUATIONS TO A SINGLE EIGHTH-ORDER GOVERNING EQUATION	18
DISTRIBUTION	23

LIST OF SYMBOLS

D	differential operator $\frac{d(\ )}{dx}$
E	effective elastic modulus of the adherend material in plane strain defined in equation (29), lb/in.^{2}
E_a	Young's modulus of the adhesive material, lb/in.^{2}
E'	Young's modulus of the adherend material, lb/in.^{2}
G	shear modulus of the adherend material, lb/in.^{2}
G_a	shear modulus of the adhesive material, lb/in.^{2}
h	adhesive layer thickness, in.
K	dimensionless parameter defined in equation (17)
L	differential operator determinant defined in equation (53)
L_1, L_2, L_3	Lagrange undetermined multipliers
M	bending moment per unit width of adherend, lb-in./in.
m	dimensionless bending moment variable defined in equation (17)
N	axial force per unit width of adherend, lb/in.
n	dimensionless axial force variable defined in equation (17)
P	differential operator determinant defined in equation (53)
Q	transverse shear force per unit width of adherend, lb/in.
q	dimensionless transverse shear force variable defined in equation (17)
R	differential operator determinant defined in equation (52)
S	stress variable defined in equation (9), lb/in.^{2}
s	dimensionless stress variable defined in equation (17)
t	adherend thickness, in.
U_c	complementary strain energy for a unit width of the joined structure, lb-in.

X coordinate shown in Figure 1, in.

x dimensionless coordinate defined in equation (17)

Y coordinate shown in Figure 1, in.

Z coordinate shown in Figure 1, in.

δ variational operator

$\lambda_1, \lambda_2, \lambda_3$ quantities defined in equation (17)

μ dimensionless wavelength parameter introduced in equation (17)

ν effective Poisson's ratio of the adherend material in plane strain defined in equation (29)

ν' Poisson's ratio of the adherend material

$\sigma_{xx}, \sigma_{yy}, \sigma_{zz}$ normal stresses, lb/in.^{2}

σ σ_{zz} in the adhesive layer, lb/in.^{2}

$\tau_{xy}, \tau_{xz}, \tau_{zy}$ shear stresses, lb/in.^{2}

$\bar{\tau}$ τ_{zx} in the adhesive layer, lb/in.^{2}

τ dimensionless stress variable defined in equation (17)

INTRODUCTION

Adhesives have been in use for hundreds of years. Genghis Khan's remarkable success was partially due to his archers' use of small, powerful bows made by laminating different materials with animal and vegetable derivatives used as gluing agents.[1,2] Exposure to moisture severely weakened these bows and caused them to fail after some use. Typical of all adhesives until recently, loss of strength due to moisture strictly limited the structural importance of such materials until the development of synthetics.

With the development of synthetic resin adhesives came the possibility of new applications. Previously only wooden components were bonded, but now metal-to-metal joints between dissimilar materials became feasible.

There are a number of reasons why the replacement of mechanical fasteners and welded joints by adhesives is attractive. The continuous nature of the joint reduces stress concentrations and provides longer fatigue life.[3,4] Dissimilar materials can be effectively joined with adhesives where an alternative joining procedure would have been nonexistent or prohibitively difficult before. A good example is the metal-paper honeycomb sandwich. New structural applications such as honeycomb sandwich and fibrous composites have been made possible with strong adhesives. Yet another important advantage is an economic one. Adhesive joining eliminates a number of production costs associated with setting up and assembling joints with rivets and spot welds.[1] The lap joint is particularly favorable in this respect because of its basic simplicity and ease of fabrication.

The inability of a stress analyst or designer to determine whether or not he has correctly analyzed the stress distribution in an actual adhesive joint is the most formidable disadvantage to the use of this joining procedure. There are several reasons why this is so.

A realistic adhesive joint is influenced by factors that analytical methods neglect. A statistical evaluation of experimental results is required to predict accurately the regions in which failure will occur. Air bubbles or voids, residual stresses due to improper curing, variation of the adhesive layer thickness, and the "notch effect" due to convex or concave adhesive layer boundary all significantly influence the stress concentrations and the stress distributions within an adhesive joint.[5,6,7] Variation of thickness is so important that some authors consider thickness to be the essential criterion for strength predictions.[8,9] This means that the care taken in the fabrication of an adhesive joint is a determining factor of its strength - a factor which, unfortunately, cannot be accounted for in a deterministic fashion.

Theoretical efforts have left important areas unexplored or inadequately examined. There is no unified view that spans the entire range of useful parameters, although many analyses exist which treat limited cases. There are a number of theories available that are based on simplifications of the

actual three-dimensional elastic problem. Unfortunately, their application is limited by the fact that it is unclear in which instances the simplifications are valid.

Experimental research and widespread engineering use of adhesives is hampered by the lack of a fully reliable nondestructive test. Where experimental research is held back, analytical work is also hindered. As Sherlock Holmes[10] said, "I have no data yet. It is a capital mistake to theorize before one has data. Insensibly one begins to twist facts to suit theories, instead of theories to suit facts." Theory without experimental confirmation cannot be completely relied upon.

These three facts - the statistical nature of adhesive joints, uncertainty surrounding available theories, and the lack of reliable nondestructive testing techniques - have limited the use of adhesives and plagued joint designers. Nevertheless, analytical and semiempirical results currently must be used as the best available means of estimating joint characteristics for design purposes. After manufacturing has commenced, destructive tests on a sampling basis are normally conducted to insure joint reliability.

The analysis of the complete three-dimensional adhesive joint problem is difficult and, in view of the uncertainty of practical fabrication techniques, cannot be justified. Fortunately, investigators have established some degree of correlation between experimental data and their particular simplified theories. Reference 1 provides a good survey of the contributions of Volkersen, de Bruyne, Goland and Reissner, Plantema, Mylonas, and others.[7,11-14]

The present thesis is concerned with establishing a unified theory that spans the unexplored area between a rigorous elastic analysis[13] and the highly simplified theory of Lunsford.[15] Initial simplifications due to similarity of adhesive joints and sandwich structure make possible a straightforward analysis accounting for what are believed to be the most important factors influencing joint behavior.

A complementary energy expression is obtained and combined by means of Lagrange multipliers with the equilibrium equations. The principle of minimum complementary energy is employed to obtain equations of consistent deformation which can be reduced to a single eighth-order equation.

ANALYSIS

FORMULATION OF THE PROBLEM

In any engineering theory it is desirable to simplify the actual physical problem in order to reduce the difficulty of obtaining numerical results, particularly when the neglected effects are of minor importance. Nevertheless, it is advantageous to retain as many contributing factors as is necessary to adequately describe the problem. The analysis of adhesive joints should be approached in this spirit. This problem is an intricate one, but it is highly academic to account for all details because of the uncertainties and irregularities introduced by practical fabrication techniques.

The simplest adhesive joint is the lap joint. Since it is the most commonly used in actual applications of adhesive joints, it is considered here. Furthermore, the analysis will be restricted to a lap joint which has one adherend much stiffer than the other. (A "rigid" idealization will be used.) The remaining adherend thickness t will be assumed to be much greater than the adhesive layer thickness h so that the ratio of h to t will be negligibly small. An inverse relation exists between joint strength and adhesive thickness; therefore, a very thin adhesive layer can be expected.

Adhesive lap joints resemble ordinary sandwich structures, such as those with high-strength faces and thick cores. A sandwich core is loaded primarily in shear, with the effect of face parallel normal stresses of secondary importance; the same is true of the adhesive layer. Axial and bending stresses are the primary loading of both sandwich face sheets and adherends, but transverse normal and shear effects must be included for the latter. From the established theory of sandwich structures, the assumption of a state of antiplane stress in the core is used for the adhesive layer.[16]

The analysis will be conducted by otaining the equilibrium equations of the upper, nonrigid adherend. An expression for the complementary energy of the system will be derived including effects of shear and normal stresses in the adhesive layer and shear, axial, bending, and normal stresses of the adherend. The equilibrium equations, multiplied by Lagrange multipliers, will be added to the complementary energy expression. The principle of minimum complementary energy is used along with the variational calculus to obtain the governing equations, which are reduced to a single eighth-order differential equation.

Adhesive Layer

It is assumed that a state of antiplane stress exists and that there are no body forces or residual stresses acting on the adhesive layer. Attention

is restricted to a unit width in the y direction.*

The equilibrium equations are

$$\sigma_{xx,x} + \tau_{xy,y} + \tau_{xz,z} = 0 \tag{1}$$

$$\tau_{yx,x} + \sigma_{yy,y} + \tau_{yz,z} = 0 \tag{2}$$

$$\tau_{zx,x} + \tau_{zy,y} + \sigma_{zz,z} = 0 \tag{3}$$

The usual notation for stresses is used, with σ's denoting normal stresses and τ's denoting shear stresses.

The above assumptions are equivalent to

$$\sigma_{xx} = \tau_{xy} = \tau_{yx} = \sigma_{yy} = \tau_{yz} = \tau_{zy} = 0 \tag{4}$$

The simplified equations are

$$\bar{\tau}_{,z} = 0 \tag{5}$$

$$\bar{\tau}_{,x} + \sigma_{,z} = 0 \tag{6}$$

where

$$\bar{\tau} = \tau_{zx}, \quad \sigma = \sigma_{zz} \tag{7}$$

Equation (5) indicates that $\bar{\tau}$ is a function of x alone.

$$\bar{\tau} = \bar{\tau}(x) \tag{8}$$

---

*See Figure 1 for coordinates.

Equation (6) indicates that

$$\sigma = S - z\,\bar{\tau}_{,x} \tag{9}$$

where S is a function of x only.

$$S = S(x) \tag{10}$$

Adherend

The arrangement, dimensions, and coordinates of the adhesive joint to be considered are shown in Figure 1. Figure 2 illustrates a typical element of the upper adherend, from which the following equilibrium equations can be deduced by inspection:

$$N_{,x} = \bar{\tau} \tag{11}$$

$$Q_{,x} = S - \frac{h}{2}\,\bar{\tau}_{,x} \tag{12}$$

$$M_{,x} = Q - \frac{t}{2}\,\bar{\tau} \tag{13}$$

THE ENERGY EXPRESSION

The derivation of the complementary energy expression can be found in Appendix I. The contribution of the adhesive layer shear and normal stresses is

$$U_c = \frac{1}{2}\int_0^{\ell}\left[\frac{S^2 h}{E_a} + \frac{(\bar{\tau})^2 h}{G_a} + \frac{(\bar{\tau})^2 h^3}{12E_a}\right]dx \tag{14}$$

The contribution of the adherend shear, axial, bending, and normal stresses is

$$U_c = \frac{1}{2}\int_0^{\ell}\left\{\left[\frac{N^2}{Et} + \frac{12M^2}{Et^3}\right] - \frac{\nu}{E}\left[\frac{NS}{2} - \frac{6}{5}\frac{MS}{t} - \left(\frac{3h}{t} + 1\right)\frac{t}{12}N\bar{\tau}_{,x}\right.\right.$$

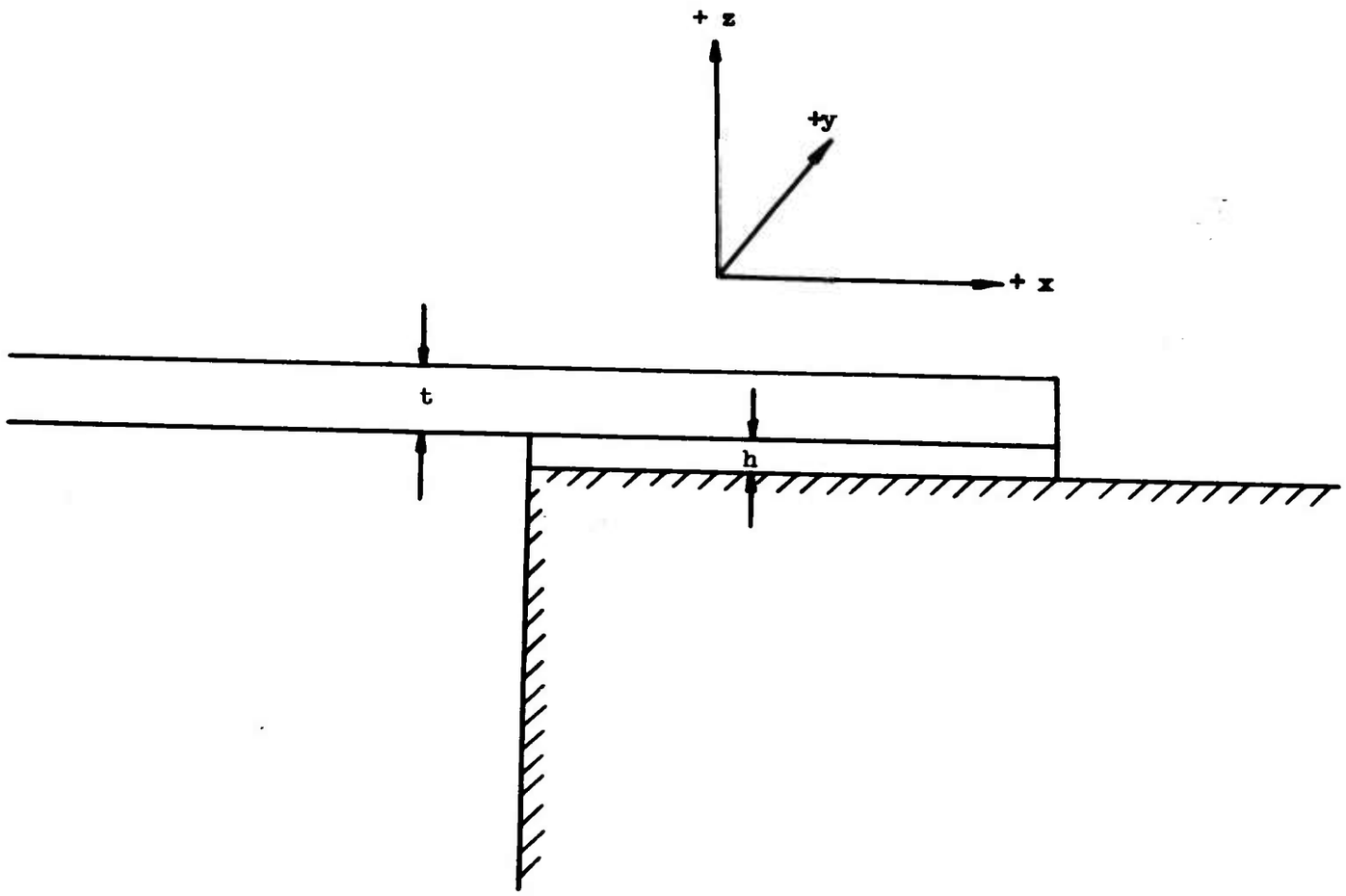

Figure 1. Adhesive Lap Joint.

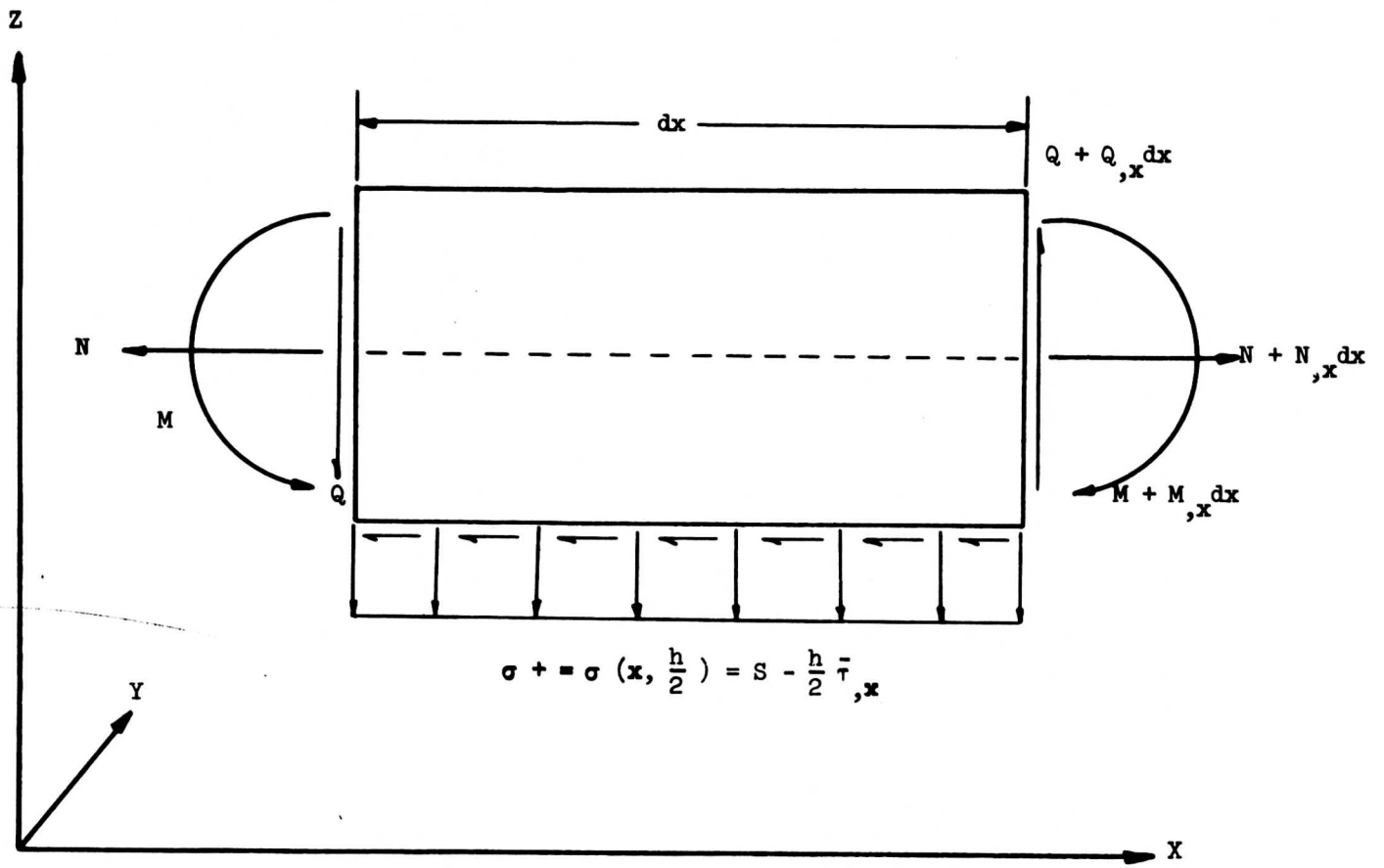

Figure 2. Adherend Element.

$$+ \left(\frac{6h}{t} + 1\right) \frac{M\bar{\tau}_{,x}}{10} \Bigg] + \Bigg[\frac{13}{35}\frac{t}{E} S^2 - \frac{t^2}{105E}\left(\frac{39h}{t} + 11\right) S\bar{\tau}_{,x}$$

$$+ \frac{t^3}{420E}\left(\frac{39h^2}{t^2} + \frac{22h}{t} + 4\right)\left(\bar{\tau}_{,x}\right)^2\Bigg] + \Bigg[\frac{6}{5}\frac{Q^2}{Gt} + \frac{2}{15}\frac{t}{G}(\bar{\tau})^2 - \frac{1}{5}\frac{Q\bar{\tau}}{G}\Bigg]\Bigg\} dx \qquad (15)$$

By adding (14) and (15) and the sum of the product of equations (11)-(13) and Lagrange multipliers, the desired expression is obtained.

$$U_c = \int_0^{\ell} \Bigg\{\frac{1}{2}\Bigg[\frac{N^2}{Et} + \frac{12M^2}{Et^3} - \frac{\nu}{E}\frac{NS}{2} + \frac{6}{5}\frac{\nu}{E}\frac{MS}{t} + \frac{\nu t}{12E}\left(\frac{3h}{t} + 1\right) N\bar{\tau}_{,x}$$

$$-\left(\frac{6h}{t} + 1\right)\frac{M\bar{\tau}_{,x}}{10} + \frac{13}{35}\frac{t}{E} S^2 - \frac{t}{105E}\left(\frac{39h}{t} + 11\right) S\bar{\tau}_{,x} + \frac{t^3}{420E}\left(\frac{39h^2}{t^2} + \frac{22h}{t} + 4\right)\left(\bar{\tau}_{,x}\right)^2$$

$$+ \frac{6Q^2}{5Gt} + \frac{2}{15}\frac{t}{G}(\bar{\tau})^2 - \frac{1}{5}\frac{Q\bar{\tau}}{G} + \frac{S^2 h}{E_a} + \frac{h}{G_a}(\bar{\tau})^2 + \frac{(\tau)^2 h^3}{12E_a}\Bigg]$$

$$+ \Bigg[L_1\left(N_{,x} - \bar{\tau}\right) + L_2\left(Q_{,x} - S + \frac{h}{2}\bar{\tau}_{,x}\right) + L_3\left(Q - \frac{t}{2}\bar{\tau} - M_{,x}\right)\Bigg]\Bigg\} dx \qquad (16)$$

L_1, L_2, and L_3 are Lagrange multipliers that physically correspond to the displacement parallel to the joint, the displacement normal to the joint, and the adherend bending rotation, respectively. The following dimensionless variables and parameters are now introduced:

$$m = \frac{12M}{Et^2}, \qquad n = \frac{N}{Et}, \qquad q = \frac{Q}{Et}, \qquad \tau = \frac{\bar{\tau}}{E}$$

$$s = \frac{S}{E}, \qquad x = \frac{X}{\mu t}, \qquad \lambda_1 = \frac{L_1}{t}, \qquad \lambda_2 = \frac{L_2}{t} \qquad (17)$$

$$\lambda_3 = L_3, \qquad K = \frac{Eh}{E_a t}$$

By rewriting (16) and neglecting terms of order $\frac{h}{t}$ compared to unity because they are small, the expression becomes

$$U_c = Et\mu \int_0^{\ell} \frac{1}{2} \Big[n^2 + \frac{m^2}{12} + \left(\frac{13}{35} + K\right)s^2 + \frac{6}{5}\frac{E}{G} q^2$$

$$+ \left(\frac{2}{15}\frac{E}{G} + K\frac{E_a}{G_a}\right)\tau^2 + \frac{(\tau_{,x})^2}{105\mu} - \left(\frac{11}{105} s - \frac{\nu}{12} n + \frac{\nu}{120} m\right)\frac{\tau_{,x}}{\mu}$$

$$- \frac{1}{5}\frac{E}{G} q\tau - \frac{\nu}{2} ns + \frac{\nu}{10} ms \Big] + \Big[\lambda_1 \left(\frac{n_{,x}}{\mu} - \tau\right)$$

$$+ \lambda_2 \left(\frac{q_{,x}}{\mu} - s + \frac{h}{2t}\tau_{,x}\right) + \lambda_3 \left(q - \frac{\tau}{2} - \frac{m_{,x}}{12\mu}\right)\Big] dx \qquad (18)$$

GOVERNING EQUATIONS

The principle of minimum complementary energy states that

$$\delta U_c = 0 \qquad (19)$$

δn, δm, δs, and $\delta\tau$ are independent variations; the corresponding Euler equations are

$$\delta n: \qquad n - \frac{\nu}{24}\frac{\tau_{,x}}{\mu} - \frac{\nu}{4} s - \frac{\lambda_{1,x}}{\mu} = 0 \qquad (20)$$

$$\delta m: \qquad \frac{m}{12} - \frac{\nu}{240}\frac{\tau_{,x}}{\mu} + \frac{\nu}{20} s + \frac{\lambda_{3,x}}{12\mu} = 0 \qquad (21)$$

$$\delta s: \qquad \left(\frac{13}{35} + K\right)s - \frac{11}{210}\frac{\tau_{,x}}{\mu} - \frac{\nu}{4} n + \frac{\nu}{20} m - \lambda_2 = 0 \qquad (22)$$

$$\delta q: \qquad \frac{6}{5}\frac{E}{G} q - \frac{1}{10}\frac{E}{G}\tau - \frac{\lambda_{2,x}}{\mu} + \lambda_3 = 0 \qquad (23)$$

$$\delta\tau: \quad \left(\frac{2}{15}\frac{E}{G} + K\frac{E_a}{G_a}\right)\tau - \frac{\tau_{,xx}}{\mu^2} + \frac{11}{210}\frac{s_{,x}}{\mu} - \frac{\nu}{24}\frac{n_{,x}}{\mu} + \frac{\nu}{240}\frac{m_{,x}}{\mu}$$

$$- \frac{1}{10}\frac{E}{G}q - \lambda_1 - \frac{h}{2t}\frac{\lambda_{2,x}}{\mu} - \frac{\lambda_3}{2} = 0 \qquad (24)$$

Equations (20) - (24) are shown in Appendix II to be equivalent to the following eighth-order governing differential equation:

$$\left(\frac{1}{12} + K\right)\frac{D^8\tau}{\mu^8} - \left[\frac{69}{20}\nu + \frac{53}{10}\frac{E}{G} + \left(14\frac{E}{G} + 39\frac{E_a}{G_a} - \frac{21\nu}{4} + 105\frac{E_a}{G_a}K\right)K\right]\frac{D^6\tau}{\mu^6}$$

$$+ \left[102 + \frac{63}{4}\left(\frac{E}{G}\right)^2 - \frac{63}{2}\nu^2 - \frac{21}{2}\frac{E}{G}\nu + \left(420 + 126\frac{E}{G}\frac{E_a}{G_a} - 126\frac{E_a}{G_a}\nu\right)K\right]\frac{D^4\tau}{\mu^4}$$

$$- \left(189\nu + 546\frac{E}{G} + 1260\frac{E_a}{G_a}K\right)\frac{D^2\tau}{\mu^2} + 1260\tau = 0 \qquad (25)$$

The differential equation has eight associated boundary conditions, four of which must be satisfied at each end of the adhesive joint. The usual boundary value problems for joints are those for which the horizontal force, vertical force, bending moment, and adhesive shear stress assume prescribed values at the joint edges.

DISCUSSION

The eighth-order differential equation (25) is the governing equation for an adhesive lap joint. It is valid only for lap joints in which one adherend is much stiffer than the other. Furthermore, the flexible adherend thickness must be much greater than the adhesive layer thickness. This equation is more general than the idealized problem that it represents would suggest. Adhesive layers must be thin. Many applications involve attachment of flexible materials to a relatively rigid structure, and lap joints are quite common.

A comparison of the governing equation with previous theories is possible. The energy expression for the adherend, equation (15), has four bracketed quantities. They are, respectively, axial and bending energy, coupling term between axial and bending energy and normal stress energy, energy of normal stresses, and shear stress contribution. If the adherend shear contribution is neglected, the resulting equation would lead to Goland's and Reissner's results.[13] If adherend shear and normal stresses are neglected, then the equations would reduce to Plantema's results.[14] Lunsford's theory is obtained if shear, normal, and bending stress contributions of the adherend are neglected along the normal stress terms of the adhesive layer energy expression, equation (14).[15]

The theory presented cannot be considered complete until experimental confirmation is obtained. Experimental research at the Georgia Institute of Technology Aerospace Structures Laboratory is in progress, and it is hoped that an assessment of the theory's usefulness will be forthcoming.

CONCLUSIONS

A unified engineering theory for adhesive lap joints has been developed using a modified version of the principle of minimum complementary energy. Attention is restricted to joints with one adherend assumed rigid and to joints whose adhesive material is idealized as linearly elastic. Simplified stress distributions are determined from elementary considerations and are used to construct the appropriate energy functional. Energy contributions included are shear and normal stresses in the adhesive layer and shear, axial, bending, and normal stresses in the adherend.

The governing equations are reduced to a single eighth-order equation. The theories of previous investigators are obtainable from the present theory when appropriate energy contributions are neglected. Currently, no experimental confirmation of the theory's validity is available. However, research on adhesive joints at the Georgia Institute of Technology Aerospace Structures Laboratory is being conducted, and an evaluation of the theory is planned.

LITERATURE CITED

1. Benson, N. K., THE MECHANICS OF ADHESIVE BONDING, Applied Mechanics Review, Volume 14, Number 2, February 1961, p. 83.

2. Perry, H. A., ADHESIVE BONDING OF REINFORCED PLASTICS, McGraw Hill, New York, 1959.

3. Grinius, V. G., EFFICIENT JOINT DESIGN FOR REINFORCED PLASTIC STRUCTURES, National Symposium on Joining of Materials for Aerospace Systems 1965.

4. Dastin, S. J., BONDED BERYLLIUM STRUCTURES, National Symposium on Joining of Materials for Aerospace Systems 1965.

5. Ripling, E. J., Mostovoy, S., and Patrick, R. L., APPLICATION OF FRACTURE MECHANICS TO ADHESIVE JOINTS, ASTM 1963

6. Kobatake, Y., and Inoue, Y., MECHANICS OF ADHESIVE JOINTS, Applied Scientific Research, Volume 7, 1957-58, pp. 53-64.

7. Mylonas, C., PROCEEDINGS OF THE SOCIETY OF EXPERIMENTAL STRESS ANALYSIS, Volume 12, 1955, p. 129.

8. Raphael, C., VARIABLE-ADHESIVE BONDED JOINTS, Symposium on Adhesive Bonding 1966, John Wiley and Sons, 1966, p. 99.

9. de Bruyne, N. A., and Houwink, R., ADHESION AND ADHESIVES, Amsterdam, Elsevier, 1951, p. 465.

10. Doyle, A. C., A SCANDAL IN BOHEMIA, (The Works of A. Conan Doyle), New York, P. F. Collier and Sons, pp. 3-18.

11. Volkersen, O., LUFTFAHRTFORSCHUNG, Volume 14, 1938, p. 41.

12. de Bruyne, N. A., THE STRENGTH OF GLUED JOINTS, Aircraft Engineering, Volume 16, 1944, p. 115.

13. Goland, M., and Reissner, E., THE STRESSES IN CEMENTED JOINTS, Journal of Applied Mechanics, Volume 7, 1944, p. A-17.

14. Plantema, F. J., NAT LUCHTVAARTABORATORIUM, Amsterdam, Report M 1181, 1949.

15. Lunsford, L. R., STRESS ANALYSIS OF BONDED JOINTS, Symposium on Structural Adhesives Bonding 1966, John Wiley and Sons, New York, 1966, p. 57.

16. Benson, A. S., and Mayers, J., GENERAL INSTABILITY AND FACE WRINKLING OF SANDWICH PLATES-UNIFIED THEORY AND APPLICATIONS, Presented at AIAA Third Aerospace Science Meeting, January 1965, Paper 66-138.

17. Reissner, E., SMALL BENDING AND STRETCHING OF SANDWICH SHELLS, NACA TN 1832, also NACA Report 975.

APPENDIX I

DERIVATION OF COMPLEMENTARY ENERGY EXPRESSION

The complementary energy of the adhesive layer is given by

$$U_c = \frac{1}{2}\int_0^{\ell}\int_{-\frac{h}{2}}^{\frac{h}{2}} \left[\frac{(\bar{\tau})^2}{G_a} + \frac{\sigma^2}{E_a} \right] dz\, dx \tag{26}$$

Equation (26) is integrated over the thickness of the layer after substitution from equation (9).

The following expression is obtained:

$$U_c = \frac{1}{2}\int_0^{\ell} \left[\frac{S^2 h}{E_a} + \frac{(\bar{\tau})^2 h}{G_a} + \frac{(\bar{\tau})^2 h^3}{12E_a} \right] dx \tag{27}$$

The adherend strip is considered to be in a state of plane strain ($\epsilon_{yy} = 0$). The energy expression including axial, bending, normal, and shear effects is

$$U_c = \int_0^{\ell}\int_{-\frac{t}{2}}^{\frac{t}{2}} \left(\frac{\sigma_{xx}^2}{E} - \frac{\nu}{E}\sigma_{xx}\sigma_{zz} + \frac{\sigma_{zz}^2}{E} + \frac{\sigma_{xz}^2}{G} \right) dz\, dx \tag{28}$$

where

$$E = \frac{E'}{1 - \nu'^2} \quad , \quad \nu = \frac{2\nu'}{1 - \nu'} \tag{29}$$

in which E' is Young's modulus and ν' is Poisson's ratio.

σ_{xx} is given by

$$\sigma_{xx} = \frac{N}{t} + \frac{12}{t} Mz \tag{30}$$

and the energy contribution by

$$\int_{-\frac{t}{2}}^{\frac{t}{2}} \frac{\sigma_{xx}^2}{E} dz = \frac{N^2}{Et} + \frac{12M^2}{Et^3} \tag{31}$$

By using

$$\sigma_{xx,x} + \sigma_{xz,z} = 0$$

and by substituting from equations (10) and (12), an expression can be obtained for σ_{xz} upon satisfaction of the boundary equations.

$$\sigma_{xz} = \frac{6Q}{t}\left(\frac{1}{4} - \frac{z^2}{t^2}\right) + \bar{\tau}\left(\frac{3z^2}{t^2} - \frac{z}{t} - \frac{1}{4}\right) \tag{32}$$

The energy contribution can now be obtained.

$$\int_{-\frac{t}{2}}^{\frac{t}{2}} \frac{\sigma_{xz}^2}{G}\, dz = \frac{6Q^2}{5Gt} + \frac{2}{15}\frac{(\bar{\tau})^2 t}{G} - \frac{1}{5}\frac{Q\bar{\tau}}{G} \tag{33}$$

An expression for σ_{zz} can be obtained from the following equation:

$$\sigma_{xz,x} + \sigma_{zz,z} = 0 \tag{34}$$

Equations (32) and (34) are used to evaluate σ_{zz}, which becomes, upon satisfaction of boundary conditions,

$$\sigma_{zz} = \left(\frac{1}{2} - \frac{3}{2t}z + \frac{2}{t^3}z^3\right) Q_{,x} + \left(-\frac{t}{8} + \frac{z^3}{t^2} + \frac{z^2}{2t} + \frac{z}{4}\right)\bar{\tau}_{,x} \tag{35}$$

The energy contributions can now be evaluated and are found to be

$$\int_{-\frac{t}{2}}^{\frac{t}{2}} \frac{\sigma_{zz}^2}{E}\, dz = \left[\frac{13}{35}\frac{t}{E}S^2 - \frac{S\bar{\tau}_{,x}}{105}\frac{t^2}{E}\left(39\frac{h}{t} + 11\right)\right.$$

$$\left. + \frac{(\bar{\tau}_{,x})^2}{420}\frac{t^3}{E}\left(\frac{39h^2}{t^2} + 22\frac{h}{t} + 4\right)\right] \tag{36}$$

and

$$\int_{-\frac{t}{2}}^{\frac{t}{2}} \frac{\nu}{E} \sigma_{xx} \sigma_{zz} \, dz = \frac{\nu}{E} \left[\frac{NS}{2} - \frac{6}{5} \frac{MS}{t} - \left(\frac{3h}{t} + 1 \right) \frac{t}{12} N\bar{\tau}_{,x} \right.$$

$$\left. + \left(\frac{6h}{t} + 1 \right) \frac{M\bar{\tau}_{,x}}{10} \right] \tag{37}$$

The adherend energy contributions are combined according to equation (28), and the result is as follows:

$$U_c = \frac{1}{2} \int_0^{\ell} \left\{ \left[\frac{N^2}{Et} + \frac{12M^2}{Et^3} \right] - \frac{\nu}{E} \left[\frac{NS}{2} - \frac{6}{5} \frac{MS}{t} - \left(\frac{3h}{t} + 1 \right) \frac{t}{12} N\bar{\tau}_{,x} \right.\right.$$

$$\left. + \left(\frac{6h}{t} + 1 \right) \frac{M\bar{\tau}_{,x}}{10} \right] + \left[\frac{13}{35} \frac{t}{E} S^2 - \frac{t^2}{105E} \left(\frac{39h}{t} + 11 \right) S\bar{\tau}_{,x} \right.$$

$$\left.\left. + \frac{t^3}{420E} \left(\frac{39h^2}{t^2} + \frac{22h}{t} + 4 \right) \left(\bar{\tau}_{,x} \right)^2 \right] + \left[\frac{6}{5} \frac{Q^2}{Gt} + \frac{2}{15} \frac{t}{G} (\bar{\tau})^2 - \frac{1}{5} \frac{Q\bar{\tau}}{G} \right] \right\} dx \tag{38}$$

Respectively, the square-bracketed quantities are axial and bending energy, coupling between axial and bending energy and normal energy, normal stress energy, and energy due to shear stresses.

APPENDIX II

REDUCTION OF INDEPENDENT GOVERNING EQUATIONS TO A SINGLE EIGHTH-ORDER GOVERNING EQUATION

In addition to the five independent variations mentioned previously in equations (20)-(24), there are three remaining: $\delta\lambda_1$, $\delta\lambda_2$, and $\delta\lambda_3$. The equilibrium equations in nondimensional form are obtained by setting these three independent variations equal to zero.

$$\frac{n_{,x}}{\mu} = \tau \tag{39}$$

$$s = \frac{q_{,x}}{\mu} + \frac{h}{2t}\frac{\tau_{,x}}{\mu} \tag{40}$$

$$q = \frac{\tau}{2} + \frac{m_{,x}}{12\mu} \tag{41}$$

Using equation (41), equation (40) becomes $\left(\frac{h}{t} \ll 1\right)$

$$s = \frac{1}{2}\frac{\tau_{,x}}{\mu} + \frac{m_{,xx}}{12\mu^2} \tag{42}$$

λ_2 can be solved for in equation (22), λ_3 can be solved for in equation (23), and then λ_1 can be obtained from (24). These values can be substituted into equations (20) and (21) to obtain

$$n - \frac{\nu}{24}\frac{\tau_{,x}}{\mu} - \frac{\nu s}{4} - \left(\frac{1}{12}\frac{E}{G} + \frac{E_a}{G_a}K\right) - \frac{\tau_{,xxx}}{60\mu^3}$$

$$+ \left(\frac{2}{15} + \frac{K}{2}\right)\frac{s_{,xx}}{\mu^2} - \frac{\nu}{12}\frac{n_{,xx}}{\mu^2} + \frac{\nu}{48}\frac{m_{,xx}}{\mu^2} - \frac{1}{2}\frac{E}{G}\frac{q_{,x}}{\mu} = 0 \tag{43}$$

$$\frac{m}{12} - \frac{\nu}{240}\frac{\tau_{,x}}{\mu} + \frac{\nu s}{20} + \frac{1}{12}\left(\frac{13}{35} + K\right)\frac{s_{,xx}}{\mu^2} - \frac{11}{2520}\frac{\tau_{,xxx}}{\mu^3}$$

$$- \frac{\nu}{48}\frac{n_{,xx}}{\mu^2} + \frac{\nu}{240}\frac{m_{,xx}}{\mu^2} + \frac{1}{120}\frac{E}{G}\frac{\tau_{,x}}{\mu} - \frac{1}{10}\frac{E}{G}q_{,x} = 0 \qquad (44)$$

Upon rearrangement and substitution of (39) and (42), equations (43) and (44) become

$$\frac{6}{5}\frac{E}{G}\frac{q_{,x}}{\mu} - \left[m + \frac{\nu}{10}\frac{m_{,xx}}{\mu^2} + \frac{1}{12}\left(\frac{13}{35} + K\right)\frac{m_{,xxxx}}{\mu^4}\right]$$

$$= \frac{1}{10}\frac{E}{G}\frac{\tau_{,x}}{\mu} + \left(\frac{2}{15} + \frac{K}{2}\right)\frac{\tau_{,xxx}}{\mu^3} \qquad (45)$$

$$6\frac{E}{G}\frac{q_{,xx}}{\mu^2} - \left(\frac{2}{15} + \frac{K}{2}\right)\frac{m_{,xxxxx}}{\mu^5}$$

$$= 12\tau - \left(3\nu + \frac{E}{G} + 12\frac{E_a}{G_a}K\right)\frac{\tau_{,xx}}{\mu^2} + \left(\frac{3}{5} + 3K\right)\frac{\tau_{,xxxx}}{\mu^4} \qquad (46)$$

Writing in operator notation, (45) and (46) become

$$\left[\frac{6}{5}\frac{E}{G}\frac{D}{\mu}\right]q - \left[1 + \frac{\nu}{10}\frac{D^2}{\mu^2} + \frac{1}{12}\left(\frac{13}{35} + K\right)\frac{D^4}{\mu^4}\right]m$$

$$= \left[\frac{1}{10}\frac{E}{G}\frac{D}{\mu} + \left(\frac{2}{15} + \frac{K}{2}\right)\frac{D^3}{\mu^3}\right]\tau \qquad (47)$$

$$\left[6\,\frac{E}{G}\,\frac{D^2}{\mu^2}\right] q - \left[\left(\frac{2}{15} + \frac{K}{2}\right)\frac{D^5}{\mu^5}\right] m$$

$$= \left[12 - \left(3\nu + \frac{E}{G} + 12\,\frac{E_a}{G_a}\,K\right)\frac{D^2}{\mu^2} + \left(\frac{3}{5} + 3K\right)\frac{D^4}{\mu^4}\right]\tau \qquad (48)$$

where D is the differential operator $\frac{d(\ )}{dx}$. Equations (47) and (48) may be solved for q and m in terms of τ.

$$q = \frac{P\tau}{L} \qquad (49)$$

$$m = \frac{R\tau}{L} \qquad (50)$$

where L, P, and R are differential operators defined below.

$$\left.\begin{aligned}
P &= \begin{vmatrix} P_{11} & P_{12} \\ P_{21} & P_{22} \end{vmatrix} \\
P_{11} &= 12 - \left(3\nu + \frac{E}{G} + 12\,\frac{E_a}{G_a}\,K\right)\frac{D^2}{\mu^2} + \left(\frac{3}{5} + 3K\right)\frac{D^4}{\mu^4} \\
P_{12} &= -\left(\frac{2}{15} + \frac{K}{2}\right)\frac{D^5}{\mu^5} \\
P_{21} &= \frac{1}{10}\,\frac{E}{G}\,\frac{D}{\mu} + \left(\frac{2}{15} + \frac{\nu}{2}\right)\frac{D^3}{\mu^3} \\
P_{22} &= -\left[1 + \frac{\nu}{10}\,\frac{D^2}{\mu^2} + \frac{1}{12}\left(\frac{13}{35} + K\right)\frac{D^4}{\mu^4}\right]
\end{aligned}\right\} \qquad (51)$$

$$
\left.
\begin{aligned}
R &= \begin{vmatrix} R_{11} & R_{12} \\ R_{21} & R_{22} \end{vmatrix} \\
R_{11} &= \frac{6E}{G}\frac{D^2}{\mu^2} \\
R_{12} &= 12 - \left(3\nu + \frac{E}{G} + 12\frac{E_a}{G_a}K\right)\frac{D^2}{\mu^2} + \left(\frac{3}{5} + 3K\right)\frac{D^4}{\mu^4} \\
R_{21} &= \frac{6}{5}\frac{E}{G}\frac{D}{\mu} \\
R_{22} &= \frac{1}{10}\frac{E}{G}\frac{D}{\mu} + \left(\frac{2}{15} + \frac{K}{2}\right)\frac{D^3}{\mu^3}
\end{aligned}
\right\} \quad (52)
$$

$$
\left.
\begin{aligned}
L &= \begin{vmatrix} L_{11} & L_{12} \\ L_{21} & L_{22} \end{vmatrix} \\
L_{11} &= R_{11},\ L_{12} = P_{12},\ L_{21} = R_{21},\ L_{22} = R_{22}
\end{aligned}
\right\} \quad (53)
$$

If the operator L is applied to equation (41), the following result is obtained:

$$
Lq - \frac{L}{2}\tau - \frac{D}{12\mu}\,Lm = 0 \qquad (54)
$$

The terms q and m can now be eliminated with the aid of (49) and (50); the result is

$$\left(P - \frac{L}{2} - \frac{D}{12\mu} R\right) \tau = 0 \tag{55}$$

If the differential operators are expanded, the above equation can be written in the form (25).

Unclassified

Security Classification

DOCUMENT CONTROL DATA - R & D

(Security classification of title, body of abstract and indexing annotation must be entered when the overall report is classified)

1. ORIGINATING ACTIVITY *(Corporate author)*

Georgia Institute of Technology
Atlanta, Georgia
(Under subcontract to Stanford University, ~~Stanford, California~~)

2a. REPORT SECURITY CLASSIFICATION

Unclassified

2b. GROUP

3. REPORT TITLE

TOWARD AN ENGINEERING THEORY FOR ADHESIVE JOINTS

4. DESCRIPTIVE NOTES *(Type of report and inclusive dates)*

5. AUTHOR(S) *(First name, middle initial, last name)*

James T. Vaughan, Jr. and Lawrence W. Rehfield

6. REPORT DATE

September 1970

7a. TOTAL NO. OF PAGES

31

7b. NO. OF REFS

17

8a. CONTRACT OR GRANT NO.

DAAJ02-68-C-0035

b. PROJECT NO.

Task 1F162204A17002

c.

d.

9a. ORIGINATOR'S REPORT NUMBER(S)

USAAVLABS Technical Report 70-29

9b. OTHER REPORT NO(S) *(Any other numbers that may be assigned this report)*

10. DISTRIBUTION STATEMENT

This document is subject to special export controls, and each transmittal to foreign governments or foreign nationals may be made only with prior approval of U. S. Army Aviation Materiel Laboratories, Fort Eustis, Virginia 23604.

11. SUPPLEMENTARY NOTES

12. SPONSORING MILITARY ACTIVITY

U. S. Army Aviation Materiel Laboratories
Fort Eustis, Virginia

13. ABSTRACT

The development of high-strength structural adhesives has created many new uses for adhesive joints and established a need for additional theoretical and experimental study. An adhesive lap joint is analyzed, taking advantage of its similarity to a sandwich structure for which an established theory exists. The principle of minimum complementary energy is used to develop the governing equations, which are equivalent to a single differential equation of eighth order. Included in the complementary energy expression are contributions due to shear and normal stresses in the adhesive layer and due to shear, axial, bending, and normal stresses in the adherend.

DD FORM 1 NOV 65 1473 REPLACES DD FORM 1473, 1 JAN 64, WHICH IS OBSOLETE FOR ARMY USE.

Unclassified

Security Classification

Unclassified

Security Classification

14. KEY WORDS	LINK A ROLE	LINK A WT	LINK B ROLE	LINK B WT	LINK C ROLE	LINK C WT
Adhesive Joints						
Joint analysis						
Lap joints						

Unclassified

Security Classification