UNCLASSIFIED

AD NUMBER
AD875682
LIMITATION CHANGES
TO: **Approved for public release; distribution is unlimited. Document partially illegible.**
FROM: **Distribution authorized to U.S. Gov't. agencies only; Test and Evaluation; JUN 1970. Other requests shall be referred to Naval Air Systems Command, AIR-539, Washington, DC 20360. Document partially illegible.**
AUTHORITY
usnasc ltr, 23 sep 1975

THIS PAGE IS UNCLASSIFIED

THIS REPORT HAS BEEN DELIMITED
AND CLEARED FOR PUBLIC RELEASE
UNDER DOD DIRECTIVE 5200.20 AND
NO RESTRICTIONS ARE IMPOSED UPON
ITS USE AND DISCLOSURE.

DISTRIBUTION STATEMENT A

APPROVED FOR PUBLIC RELEASE;
DISTRIBUTION UNLIMITED.

Technical Report

20

AD875682

NAVPHOTOCEN R&D 70/11

Theoretical and Practical Analysis of Underwater Optics

Limited number of copies containing color other than black and white are available until stock is exhausted. Reproductions will be made in black and white only.

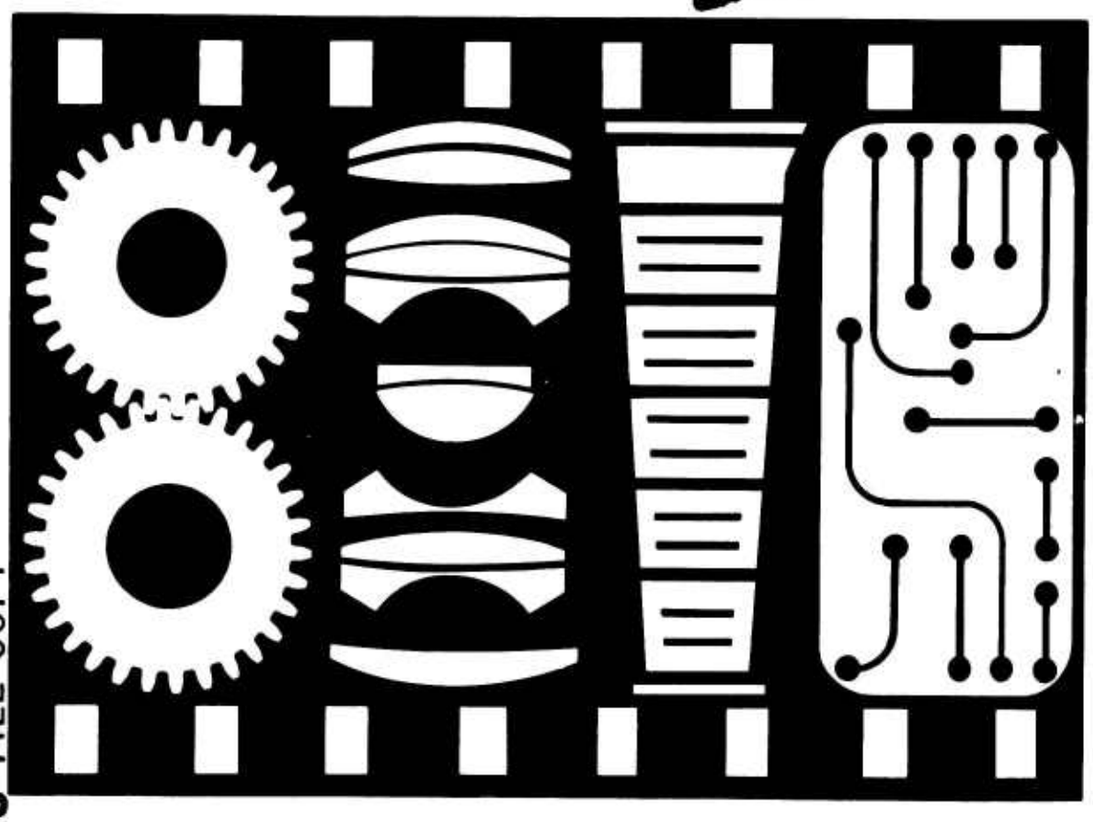

AD No. ____
DDC FILE COPY

Each transmittal of this document outside the agencies of the U.S. Government must have prior approval of NAVAIRSYSCOM (AIR-539)

DDC
RECEIVED
OCT 22 1970
C

Naval Photographic Center
Research and Development Department
Naval Station, Washington, D.C. 20390

29

Unclassified

Security Classification

DOCUMENT CONTROL DATA - R&D

(Security classification of title, body of abstract and indexing annotation must be entered when the overall report is classified)

1 ORIGINATING ACTIVITY *(Corporate author)* Research & Development Department Naval Photographic Center, Naval Station Washington, D. C. 20390	2a REPORT SECURITY CLASSIFICATION Unclassified 2b GROUP

3 REPORT TITLE

Theoretical and Practical Analysis of Underwater Optics

4 DESCRIPTIVE NOTES *(Type of report and inclusive dates)*

Final Technical Report

5 AUTHOR(S) *(Last name, first name, initial)*

SEIFERT, V. A.

6 REPORT DATE 25 June 1970	7a TOTAL NO. OF PAGES 23	7b NO OF REFS 10

8a CONTRACT OR GRANT NO. b. PROJECT NO. AIRTASK A3705391/232B 0F08123 01 c d	9a ORIGINATOR'S REPORT NUMBER(S) NAVPHOTOCEN R&D 70/11 9b. OTHER REPORT NO(S) *(Any other numbers that may be assigned this report)*

10 AVAILABILITY/LIMITATION NOTICES

U.S. Government Agencies may obtain copies of this report directly from DDC. Other qualified DDC users shall request through the Commander, Naval Air Systems Command, Washington, D. C. 20360

11. SUPPLEMENTARY NOTES	12. SPONSORING MILITARY ACTIVITY Naval Air Systems Command (AIR-539) (Department of the Navy)

13 ABSTRACT

The Naval Photographic Center has sponsored underwater optical studies and the development of a number of Concentric Dome lenses for 16mm motion picture, 35mm and 70mm format still picture cameras. This report describes validation tests of these theories. Tests were run on an Underwater Calibrator, at the Naval Photographic Center and compared with the plane parallel window with an air lens and the Corrector approach. Design criteria are discussed for lens selection depending on the particular application. Test results indicated that lenses designed specifically for underwater photography outperforms air lenses adapted for underwater imaging. Resolution and distortion for water lenses was superior for wide angle coverage. The Corrector and Concentric Dome approach resulted in similar results. The Concentric Dome has better structural strength than any plane parallel window or corrector.

Details of illustrations in this document may be better studied on microfiche

Limited number of copies containing color other than black and white are available until stock is exhausted. Reproductions will be made in black and white only.

DD FORM 1 JAN 64 1473

Unclassified

Security Classification

Unclassified

Security Classification

14 KEY WORDS	LINK A ROLE	LINK A WT	LINK B ROLE	LINK B WT	LINK C ROLE	LINK C WT
1. Underwater Optics						
2. Optical Design						
3. Aberration Measurements						

INSTRUCTIONS

1. ORIGINATING ACTIVITY: Enter the name and address of the contractor, subcontractor, grantee, Department of Defense activity or other organization *(corporate author)* issuing the report.

2a. REPORT SECURITY CLASSIFICATION: Enter the overall security classification of the report. Indicate whether "Restricted Data" is included. Marking is to be in accordance with appropriate security regulations.

2b. GROUP: Automatic downgrading is specified in DoD Directive 5200.10 and Armed Forces Industrial Manual. Enter the group number. Also, when applicable, show that optional markings have been used for Group 3 and Group 4 as authorized.

3. REPORT TITLE: Enter the complete report title in all capital letters. Titles in all cases should be unclassified. If a meaningful title cannot be selected without classification, show title classification in all capitals in parenthesis immediately following the title.

4. DESCRIPTIVE NOTES: If appropriate, enter the type of report, e.g., interim, progress, summary, annual, or final. Give the inclusive dates when a specific reporting period is covered.

5. AUTHOR(S): Enter the name(s) of author(s) as shown on or in the report. Enter last name, first name, middle initial. If military, show rank and branch of service. The name of the principal author is an absolute minimum requirement.

6. REPORT DATE: Enter the date of the report as day, month, year, or month, year. If more than one date appears on the report, use date of publication.

7a. TOTAL NUMBER OF PAGES: The total page count should follow normal pagination procedures, i.e., enter the number of pages containing information.

7b. NUMBER OF REFERENCES: Enter the total number of references cited in the report.

8a. CONTRACT OR GRANT NUMBER: If appropriate, enter the applicable number of the contract or grant under which the report was written.

8b, 8c, & 8d. PROJECT NUMBER: Enter the appropriate military department identification, such as project number, subproject number, system numbers, task number, etc.

9a. ORIGINATOR'S REPORT NUMBER(S): Enter the official report number by which the document will be identified and controlled by the originating activity. This number must be unique to this report.

9b. OTHER REPORT NUMBER(S): If the report has been assigned any other report numbers *(either by the originator or by the sponsor)*, also enter this number(s).

10. AVAILABILITY/LIMITATION NOTICES: Enter any limitations on further dissemination of the report, other than those imposed by security classification, using standard statements such as:

(1) "Qualified requesters may obtain copies of this report from DDC."

(2) "Foreign announcement and dissemination of this report by DDC is not authorized."

(3) "U. S. Government agencies may obtain copies of this report directly from DDC. Other qualified DDC users shall request through _____."

(4) "U. S. military agencies may obtain copies of this report directly from DDC. Other qualified users shall request through _____."

(5) "All distribution of this report is controlled. Qualified DDC users shall request through _____."

If the report has been furnished to the Office of Technical Services, Department of Commerce, for sale to the public, indicate this fact and enter the price, if known.

11. SUPPLEMENTARY NOTES: Use for additional explanatory notes.

12. SPONSORING MILITARY ACTIVITY: Enter the name of the departmental project office or laboratory sponsoring *(paying for)* the research and development. Include address.

13. ABSTRACT: Enter an abstract giving a brief and factual summary of the document indicative of the report, even though it may also appear elsewhere in the body of the technical report. If additional space is required, a continuation sheet shall be attached.

It is highly desirable that the abstract of classified reports be unclassified. Each paragraph of the abstract shall end with an indication of the military security classification of the information in the paragraph, represented as *(TS)*, *(S)*, *(C)*, or *(U)*.

There is no limitation on the length of the abstract. However, the suggested length is from 150 to 225 words.

14. KEY WORDS: Key words are technically meaningful terms or short phrases that characterize a report and may be used as index entries for cataloging the report. Key words must be selected so that no security classification is required. Identifiers, such as equipment model designation, trade name, military project code name, geographic location, may be used as key words but will be followed by an indication of technical context. The assignment of links, roles, and weights is optional.

DD FORM 1 JAN 64 1473 (BACK)

Unclassified

Security Classification

NAVAL PHOTOGRAPHIC CENTER
RESEARCH AND DEVELOPMENT DEPARTMENT
NAVAL STATION
WASHINGTON, D. C. 20390

25 June 1970 No. of pages 23

NAVPHOTOCEN R&D 70/11

Theoretical and Practical Analysis of Underwater Optics

Prepared By: V. A. Seifert
V. A. SEIFERT
Methods and Processes Division

Reviewed By: J. A. Schantz
J. A. SCHANTZ
Asst. Head, Research & Development Dept.

Approved By: R. A. White
R. A. WHITE, LCDR, USN
Head, Research & Development Dept.

Released By: R. F. Roemer
R. F. ROEMER, Captain, USN
Commanding Officer

TABLE OF CONTENTS

	Page No.
OBJECTIVE	1
ABSTRACT	1 - 2
INTRODUCTION	2
INTRODUCTION TO THEORY	2 - 3
THEORY	4 - 8
TESTS AND RESULTS	8 - 17
DISCUSSION OF RESULTS	17
DESIGN CONSIDERATION FOR LENS SELECTION	18 - 23
CONCLUSION	23

FIGURES 1 & 2	OPTICAL THEORY
FIGURES 3, 4 & 5	DISTORTION
FIGURES 6, 7 & 8	OPTICAL DESIGN CONSIDERATION
PICTURES 1 - 4	CHROMATIC DISTORTION
PICTURES 5 - 12	DISTORTION

FINAL REPORT

SUBJECT: Theoretical and Practical Analysis of Underwater Optics

REFERENCE:
(a) MIL-STD 150, Photographic Lenses, 1961
(b) NBS Circular 533, "Method for Determining the Resolving Power of Photographic Lenses", 20 May 1953
(c) McNeil, G.T. "Underwater Camera Calibrator", SPIE Journal, v.4, n.3, 1966
(d) W. Mandler, "Design Consideration for Underwater Lenses with Water Contact Elements Concentric with the Entrance Pupil"
(e) Wakimoto, Z. "On Designing Underwater Camera Lenses, "Paper given at the Convention of the American Society for Photogrammetry, March 8, 1967
(f) McNeil, G.T. "Optical Fundamentals of Underwater Photography" 1968
(g) Born and Wolf, "Principles of Optics", The MacMillan Company, New York 1964
(h) Robertson, J.K., "Introduction to Optics", D. van Nostrand Company, Inc., 1959
(i) NAVPHOTOCEN R&D 68/17 4 Sept 1968
(j) NAVPHOTOCEN R&D 69/36 28 Jan 1970

I OBJECTIVE

The purpose of this project was to correlate and verify current theory on underwater optics by means of practical laboratory tests.

II ABSTRACT

The Naval Photographic Center has sponsored underwater optical studies and the development of a number of Concentric Dome lenses for 16mm motion picture, 35mm and 70mm format still picture cameras. This report describes validation tests of these theories. Tests were run on an Underwater Calibrator, at the Naval Photographic Center and compared with the plane parallel window with an air lens and the Corrector approach. Design criteria are discussed for lens selection depending on the particular application. Test results indicated that lenses designed specifically for underwater photography outperforms air lenses adapted for underwater imaging. Resolution and distortion for water lenses was superior for wide angle coverage. The Corrector and Concentric Dome approach resulted in similar results. The Concentric Dome has better structural strength than any plane parallel window or corrector.

The first section of this report restates the optical considerations given to the various designs according to reference (e). The second section describes test and evaluation procedures and results; the third section emphasizes optical design criteria for selection of optics according to reference (f).

INTRODUCTION

Recent advances in the development of underwater photo-optical instrumentation required a closer investigation into the design concept, testing and criteria for application. Theory has long preceeded the actual design and construction of underwater optics and their component parts. This development has resulted into three basic approaches for underwater imaging: the plane parallel window with an air lens, the Ivanoff Corrector with an air lens and the Concentric Dome Window with a lens designed for underwater photography. Along with this development, several questions have arisen; how could theory be verified in the laboratory prior to actual use and how did the results determine the selection of the system? This presentation reviewed some of the theory of primary concern to the optical designer and consequently verified these theories under actual laboratory tests with consideration given to the method of testing and final performance and design consideration for the selection of a particular optical system.

INTRODUCTION TO THEORY

Oblique rays of light refract at the interface of two media with different indices of refraction. The refraction angle varies with the wavelength of light causing color dispersion or color distortion

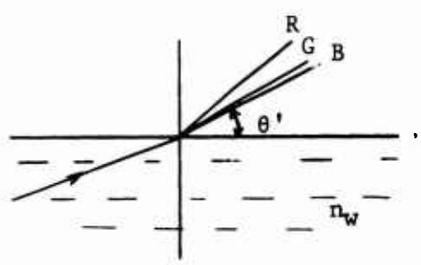

Figure I

Where θ' is a function of λ (wavelength). Now let us consider an object y and image y' as in Figure 2

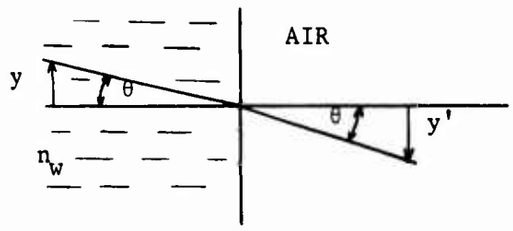

Figure 2

In order that the object y and the image y' are in an analogous relation to each other, the ratio between y and y' is to be constant, therefore:

$$\frac{y'}{y} = c \cdot \frac{\tan \theta'}{\tan \theta'} = \text{Constant}$$

but since $\frac{\sin \theta'}{\sin \theta} = n_w =$ constant, according to the law of refraction, $\frac{\tan \theta'}{\tan \theta}$ cannot be constant but will vary with the angle θ. This means that the larger the incident angle, the more distorted will be the image. This linear distortion, increasing with larger angles of θ, results in color fringes due to the varying index of refraction of white light as a function of λ (wavelength). By observing objects towards the edge of a color transparency, there is a red fringe on the inside, and a blue fringe on the outside of the picture with the rest of the spectrum in between, see Picture 3. On black and white film, this will appear as a blurred image and loss of detail or resolution, consequently, the higher the chromatic aberration of a photo-optical underwater system, the lower the overall resolution. This is analogous to air systems.

Angular coverage of an air lens is reduced due to the index of refraction of water. Water attenuation and particle scattering limits underwater photography to close-up work. Most underwater photography is done at distances not exceeding 30 feet (10 meters) with a few exceptions where water is quite clear. In order to get any amount of coverage, wide-angle underwater optics are preferred. On the other hand, the wider the angular coverage, the more chromatic aberration, distortion and image plane curvature resulting in loss of information. In general, it can be stated that it is unavoidable to encounter some distortion of the image with any air lens.

THEORY

A. CHROMATIC DISTORTION

From the law of refraction:

$$n_w \sin \theta_w = n_g \sin \theta_g = n_a \sin \theta_a$$

$$\text{OR} \quad n_w \sin \theta_w = n_a \sin \theta_a$$

The subscripts w,g, and a stand for water, glass, and air respectively. A glass interface,separating water from the air lens does not cause any problems as long as the object is at infinity or the object is far and the thickness of the glass is thin.

However, at finite conjugate distances, we have to consider the following relationships:

$$n_{wr} \sin \theta_w = \sin \theta_{ar}$$

$$\text{OR} \quad n_{wb} \sin \theta_w = \sin \theta_{ab}$$

where subscripts b and r refer to red and blue light. This differentation between colors is necessary because $n_w = f(\lambda)$

therefore $\sin \theta_{ab} - \sin \theta_{ar} = (n_{wb} - n_{wr}) \sin \theta_w$

which indicates that this relationships depends on θ in water; thusly, the larger the angle θ the larger the chromatic aberration.

B. DISTORTION

Looking at a subject y, Fig. 2 at an angle θ , it will refract in a direction θ' forming an image y'. If tan θ is proportional to tan θ' as in Fig. 2, the apparent size will be analagous to actual size.

$$\frac{\tan \theta'}{\tan \theta} = \frac{\dfrac{\sin \theta'}{\cos \theta'}}{\dfrac{\sin \theta}{\cos \theta}} = \frac{\sin \theta'}{\sin \theta} \cdot \frac{\cos \theta}{\cos \theta'}$$

however, previously we said that: $n_w \sin\theta = \sin\theta'$

therefore: $\frac{\tan\theta'}{\tan\theta} = n_w \frac{\cos\theta}{\cos\theta'}$; $\theta w < \theta a$

n_w = constant for given water temperature, pressure and salinity, but θ and θ' change due to the equation $n_w \sin\theta = \sin\theta'$

therefore $\frac{\cos\theta}{\cos\theta'} \neq$ Constant

therefore $\tan\theta'$ is not proportional to $\tan\theta$. The distortion of the subject is proportional to $\frac{\cos\theta}{\cos\theta'}$, which changes with θ.

Distortion can then be expressed:

$$\frac{y - y^o}{y^o} \cdot 100 = \left\{ \frac{\cos\theta}{\cos\theta'} - 1 \right\} \cdot 100\ \%$$

IF: $\frac{\cos\theta}{\cos\theta'} > 1$ THEN: $\frac{\cos\theta}{\cos\theta'} - 1 > 0$

which means that distortion is always positive.

C. PICTURE ANGLE

The angle of incidence is reduced by the index of refraction of the media. Some immediate solutions to the above mentioned problems would be to replace the glass window by either a concave lens to keep $\theta = \theta'$ which would keep the angle the same but would have structural deficiencies, or use a spherical boundary surface with its center coincident with the principal point

or the entrance pupil of the lens. Then there would be:

No refraction
Same Angle
No distortion
No chromatic aberration

Since a curved surface gives a curved picture and the entrance pupil is not a point but of finite physical size, the lens will still have to correct for those problems.

Let us consider the individual optical designs presently used for underwater imaging.

1. Plane Parallel Port

The advantage of such a system is that conventional photographic equipment can be used with some sort of housing to separate camera from water. The angular coverage is reduced to approximately 3/4 of the original lens angle. This system has little or no distortion as long as $\frac{\cos\theta}{\cos\theta'} \approx 1$; chromatic aberration will also be low.

However the useful picture angle would be limited to less than 20°. Larger angular coverage would result in chromatic aberration, distortion and loss of resolution.

2. Plane Parallel Port, using an achromatic window of two types of glass with the same index of refraction but different color dispersion. The cemented surface has to be properly curved such that $\theta'_{red} = \theta'_{blue}$

If some distortion is permissable, a sharp image can be obtained since there is no chromatic aberration. This system, however, cannot correct for distortion. Angular coverage is still reduced as above.

3. Concave Lens

This approach with proper glass selection can correct for distortion and chromatic aberration if the taking lens is redesigned. The physical construction of such a system is however very impractical due to high underwater pressures.

4. Lens system in combination with a Telescope System.

The picture angle θ' is reduced by n_w getting θ in water. Mathematically the angle reduction is:

$$\tan\theta = \frac{1}{n_w}\frac{\cos\theta'}{\cos\theta}\tan\theta'$$

Therefore if we use a telescope with a magnification of $\frac{1}{n_w}\frac{\cos\theta}{\cos\theta'}$, the picture should be the same as in air

The telescope itself needs a magnification of $\frac{1}{n_w}$ and a distortion of $\frac{\cos\theta}{\cos\theta'}$

A Galileo type telescope is suggested because of simple construction and easier correction for aberrations. Even though the magnification will be slightly different for $\frac{1}{n_w}$, the distortion can probably be eliminated.

This system led to the Ivanoff Corrector which at present time is the most widely used corrected system.

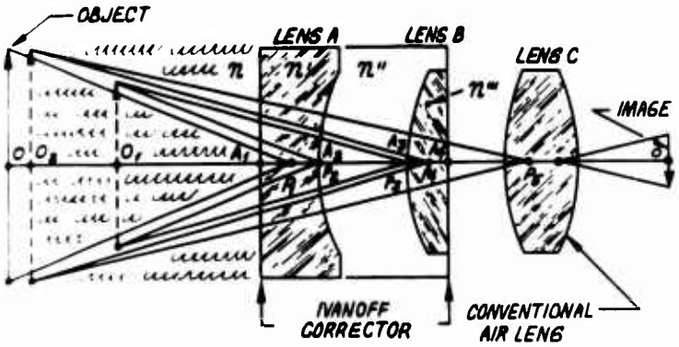

Ivanoff Corrector Window in Combination with Air Lens

5. Concentric Lens

When the front nodal point of the taking lens is brought to the center of the concentric lens, rays directed toward the center of the dome are normal to the concentric surfaces and therefore are not refracted, dispersed or distorted, also the angular coverage of the taking lens does not change. This permits extreme wide angle photography. The concentric lens produces a virtual and spherical image which is recorded by the taking lens on film.

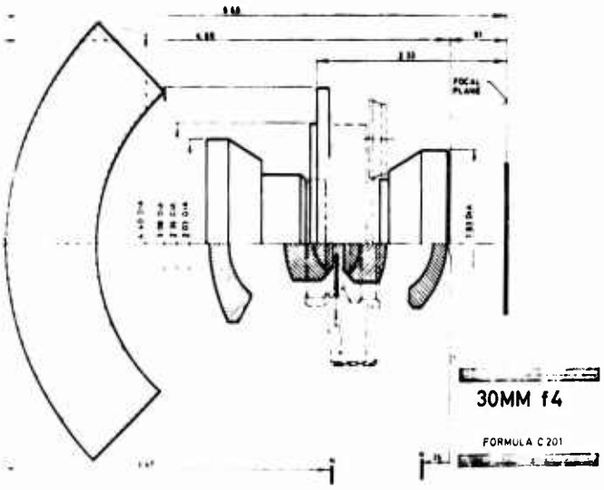

In practice, the entrance pupil which is of some physical dimension, must be at the Center of the dome radius. The taking lens must be able to compensate for the spherical image before recording on film. The degree of curvature of the image is proportional to the radius of the concentric dome.

Preliminary Conclusions

For underwater photography covering more than 20 degrees, some changes have to be made for optical correction, it actually is preferred to have the optical system designed only for underwater photography, not air photograph included.

TESTS AND RESULTS

Three basic types of underwater lens systems were tested for comperative analysis along with lenses used in air. The three approaches were the plane parallel port, the Ivanoff Corrector and the Concentric Dome. In addition, the Hopkins 45mm f/4.5 underwater lens was evaluated since it was specifically designed for underwater photography using the plane parallel port approach with

the taking lens designed to compensate for this problem. All tests were performed under controlled laboratory conditions.

The instrument used to test underwater cameras was an underwater camera calibrator. The Calibrator is a precision instrument that provided a known angular array of targets to be photographed by a camera under test. The images of the targets were then read and measured to yield the necessary data for the determination of focal length, distortion, and resolution. Generally, the targets of a camera calibration instrument are located at optical infinity; however, the images presented to the camera by the Underwater Camera Calibrator may be set for any distances from 6 feet to infinity. Thus, a camera focused at 10 feet can be tested with a ten foot object distance. The angles between the targets were 7 1/2 degrees at all object distances.

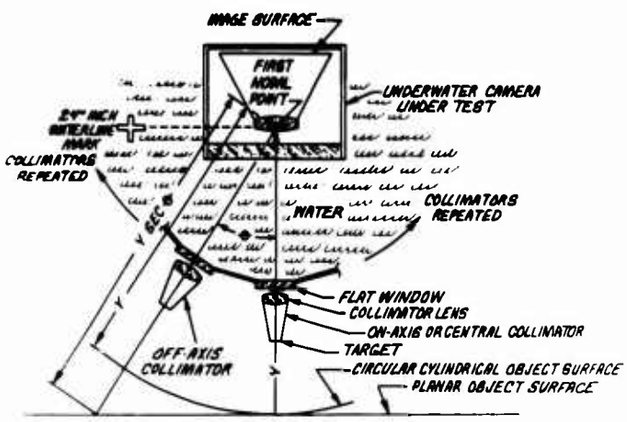

On-Axis and Off-Axis Collimators

The purpose of the Camera Calibrator was to provide precise reference direction angles of its targets whereby the interior orientation of a camera may be determined from the measurements made between the recorded images of the targets. Resolution was determined from resolution targets in each collimator. The film distance between the image of the central reference point and the image of any other reference point divided by the tangent of the corresponding angle was equal to the image distance. When the collimators were set for infinity the focal length was determined.

DISTORTION

GIVEN: EFL
ANGULAR INTERVALS OF TARGETS

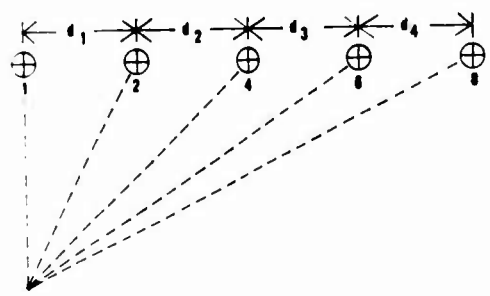

DISTORTION: $dn = EFL \times \tan L_n - d_{MEASURED}$

In the first series of tests, resolution and distortion was measured for air lenses which subsequently were used in the Underwater Camera Calibrator with an optical flat simulating a plain parallel port. The air lenses were tested in an Air Camera Calibrator based on the same principle as the Underwater Camera.

TABLE I
(1)
Resolution (L/mm)

	Summicron 35mm f/2				Super-Angulon 21mm f/3.4			
	AIR		H2 0		AIR		H2 0	
Angle Off-Axis	R*	T*	R	T	R	T	R	T
0°	56	56	56	51	68	68	53	53
7.5°	56	56	51	33	68	68	43	60
15°	39	39	33	21	66	66	33	43
22.5°					56	56	35	33

(1) For 35mm Format
(*) Radia and Tangential

TABLE II
(1)

	Hopkins 45mm f/4.5	
	H2 0	
Angle Off-Axis	R	T
0°	65	65
7.5°	65	65
15°	57	46
22.5°	61	38

(1) 35mm Format

Table I gave radial and tangential resolution of two common lenses in air as well as water. Exposures were made with a Leica M-2 camera, using Kodak Panatomic X panchromatic film at ASA 32, and developed according to manufacturers specifications. The angles were measured from the optical axis out towards the edge of the picture format. Table I shows readily that the air lens did not perform as well in water. It was also noticible that when these air lenses were used in water, the system developed strong astigmatism. On axis the difference in resolution should have been the same but due to dispersion of the interface between water, glass, and air there was a slight loss. In addition, the following micro photographs showed the effect of chromatic aberration.

Picture No. 1

Picture No. 2

The first picture was a picture of the target on axis, whereas picture number two was the target 30 degrees off axis. The color fringes were quite apparent and according to theory. Additionally, the image was distorted to form an approximate ellipse and theoretically should have been circular as the target on axis. Picture No. 3 was a blow up micro-photograph of the cross section of the outer ring of picture No. 2, and presented to the viewer the complete visible spectrum because of changing refractive index as a function of wavelength. Picture No. 4 was a further demonstration, that even the most highly corrected air lenses did not perform satisfactorily in water. This picture was taken with a 66mm f/2 apochromat and this target is only 7 1/2 degrees off-axis. No matter how well an air lens was corrected, in combination with a parallel port there will always be chromatic distortion.

Picture No. 3

Picture No. 4

Table II listed the resolution of the Hopkins 45mm f/4.5 underwater lens. Resolution was good for all practical purposes but this lens developed some astigmatism towards the edge of the picture format. If, however, this focal length and aperture is satisfactory, this lens would have been preferred over the air counterparts.

Fig. 3 was the distortion characteristic of the Super-Angulon in air and in water with the distortion curve of the Hopkins lens. The Hopkins lens was excellent out to about 15 degrees followed by a sudden negative distortion but still reasonably when compared to air lenses.

The next series of tests were to compare the plane parallel port to the contric dome window. The two lenses selected were 90 degrees lenses, one designed for air and the other for underwater photography. Table III gave the resolution data. The C 88 air lens was used with a KE 28B camera and a plane parallel port; the C 201 was used with an underwater Hasselblad. Exposures were made on Kodak Panatomic-X film and developed according to manufacturers specifications. Again the difference was quite apparent. Astigmatism towards the edge of the format caused complete loss of resolution in the tangential direction.

TABLE III
(1)

Resolution					(L/mm)					
Angle Off-Axis	0°		7.5°		15°		22.5°		30°	
Position	R	T	R	T	R	T	R	T	R	T
Elcan C88	29	29	40	33	55	24	29	20	33	0
Elcan C201	77	77	73	66	43	35	49	31	61	43

(1) 70mm Film Format

Fig. 4 gave the distortion characteristics and pictures 5 through 10 showed the difference in image recording of the two systems out to 30 degrees off-axis.

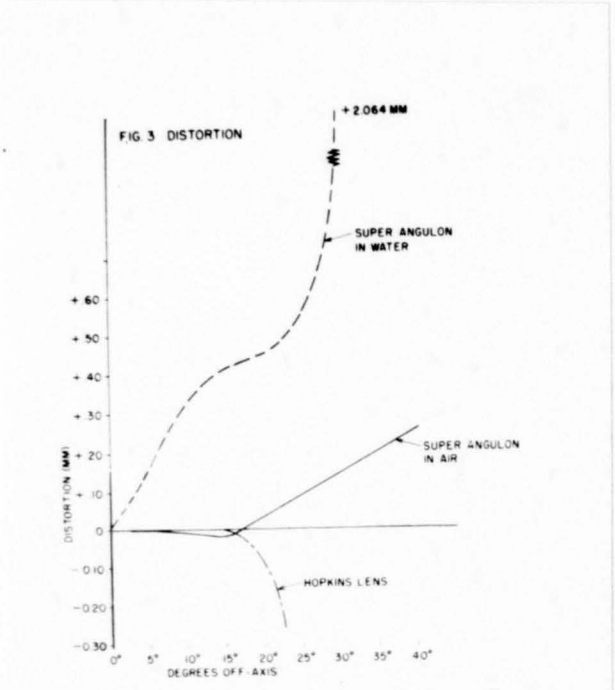

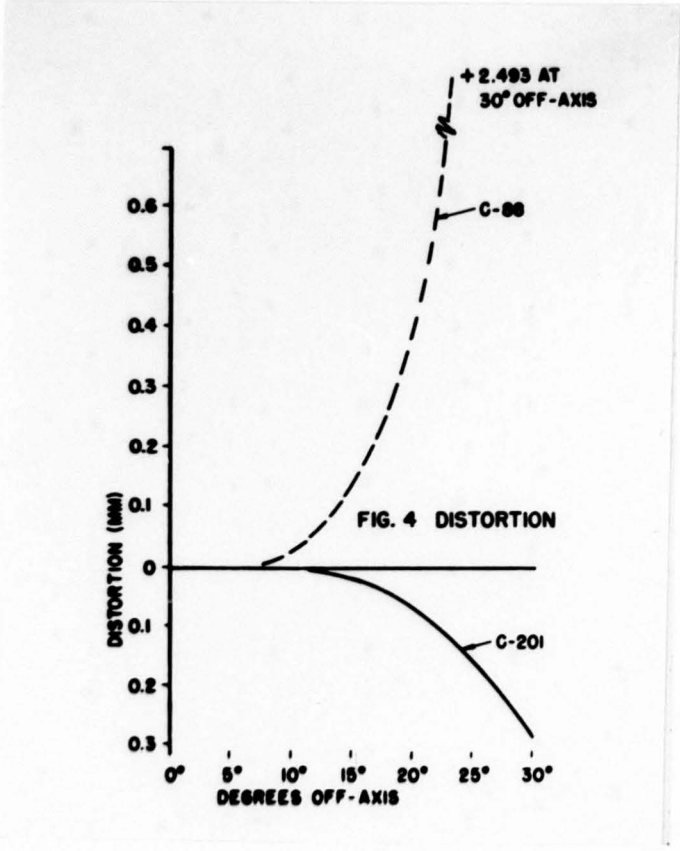

Picture 5. C201 On Axis

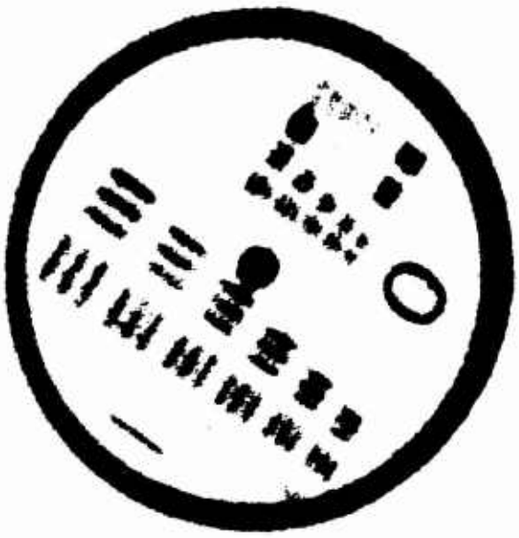

Picture 6. C88 On Axis

Picture 7. C201, 22.5° Off-Axis

Picture 8. C88, 22.5° Off-Axis

Picture 9 C201-30° Off-Axis

Picture 10. C88-30° Off-Axis

The last series of tests was to compare the Ivanoff Corrector with a Concentric Dome systems approach. In this case the optics of the underwater camera was specifically designed for underwater photography taking into consideration some of the adverse optical effects in water. In order to avoid any limitation of performance put on the lens by either the choice of film or camera, it was decided to test the lenses independently using Kodak High resolution Plates. The focal lengths of the lenses were calibrated prior to resolution and distortion measurements. The Ivanoff Corrector was used with a 10.2mm f/1.6 Switar and the Concentric Dome Window lens was the 8.9mm f/2.4 Elcan manufactured by E. Leitz, Canada Ltd

TABLE IV

(1)

RESOLUTION (1/mm)

Angle Off-Axis	0°	75°	15°	22.5°	30°
Elcan 8.9mm f/2.4	206	238	386	434	405
Switar 10.2mm f/1.6	210	232	405	N.A.	N.A.

(1)
16mm Motion Picture Format

TABLE V

RESOLUTION (L/mm)

Angle Off-Axis	0°	7.5°	15°
Elcan 18mm f/2.4	96	129	176

(1)
16mm Motion Picture Format

Table V gave the resolution. At this time figures of resolution beyond 15 degrees off-axis were not available because the mechanical configuration prevented measurements further out. However, in general both systems were very much alike in performance which also was the case for distortion Fig. 5.

FIG. 5 DISTORTION

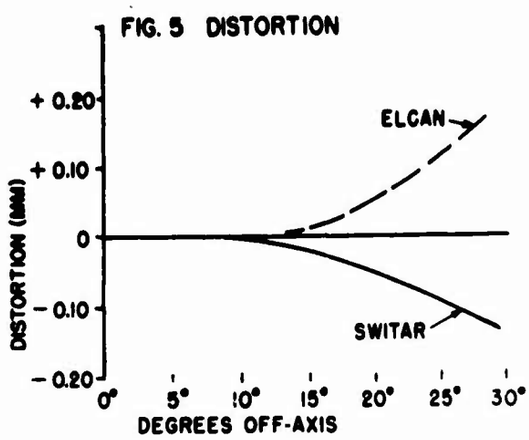

Table VI gave resolution of another concentric dome system using Kodak microfile film with an N-9 camera in a system. Resolution was excellent and pictures II and 12 show the difference in recording of the concentric dome versus a standard air lens with a plane parallel port.

Picture 11 - Concentric Dome
15° Off-Axis

Picture 12 - Plane Parallel Port
15° Off-Axis

DISCUSSION OF RESULTS

In general it can be said that the practical tests followed the theory. The difference of air systems adopted for underwater photography as compared to designed underwater optics is obvious. Distortion and loss of resolution for air systems covering more than 20 degrees limits the application of those systems As a matter of fact a total angular coverage of 10 degrees is more realistic On the other hand, optics developed specifically for underwater imaging showed results corresponding to air lens performance. The Ivanoff Corrector and the Concentric Dome approach are sound as far as optical performance is concerned However, before coming to a rash decision it is necessary to look further into the design of the three basic approaches before deciding on a final choice of optics.

DESIGN CONSIDERATION FOR LENS SELECTION

For general underwater amateur photography with limited picture angle, an air lens combination would be suitable in most cases. However, as soon as the underwater photo system was used for photogrammetric purposes or where image size must be correlated to object size, a standard air lens would be insufficient. We know that the index of refraction of water varies with wavelength, temperature, pressure and salinity, for example, see Fig. 6.

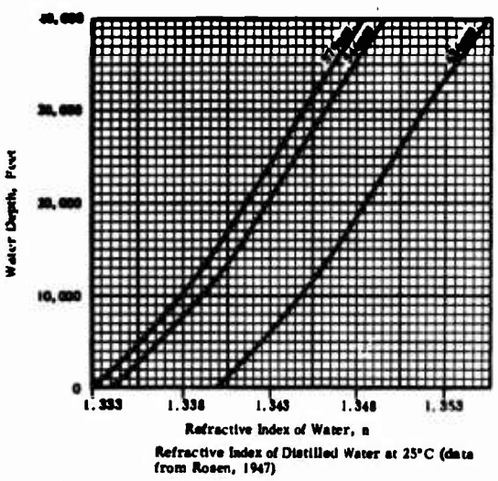

Fig. 6

How does the variability of the water refractive index effect object to image size correlation? We know that under certain circumstances the refractive index of water can change up to 2%. It also can be seen from the general equation for a thick lens composed of two surfaces.

$$\frac{n}{f} = \frac{n''}{f'} = \frac{n'-n}{r_1} + \frac{n''-n'}{r_2} - \frac{n'-n}{r_2} \cdot \frac{n''-n'}{r_2} \cdot \frac{t}{n'}$$

Where f = first focal length
f' = second focal length
n = refractive index of object space
n' = refractive index of lens
n'' = refractive index of image space
r_1 = radius of first surface of lens
r_2 = radius of second surface of lens
t = axial thickness of lens

that the second focal length varies with a change in the refractive index of water except where the first surface of the lens is planar or infinity. However, if a water lens is focused at a finite object distance, a variation in the refractive index of water will cause a change in the object distance focused upon even though the first surface of the water lens is planar.

The following equation determining the revised vertex object distance for a variation in the refractive index of water

$$S_o = \frac{n^o}{\frac{n}{S_n} + \frac{n-n^o}{r_1}}$$

where S_o = vertex object distance for a water refractive index of
S_n = vertex object distance for a water refractive index of
r_1 = radius of first surface of water lens

The vertex object distance is defined as the distance from the first vertex of the water lens to the object.

With a planar surface r_1 becomes infinity and

$$S_o = \frac{n_o S_n}{n}$$

S_o and S_n have the ratio of their respective water refractive indeces when the first surface of the water lens is planar. Furthermore it can be seen that if r_1 and S_n are equal to infinity, S_o is also equal to infinity, thereby indicating no change of focus.

The point of this discussion is to show the drastic change of the vertex object and nodal object distance of a dome lens system with changing index of refraction. For a planar first surface under the worst change of the refractive index, the vertex object and nodal object distance change two percent which means about 20mm for an object distance of 5 meters. On the other hand let us assume an object nodal distance of 5 meters or 500cm with dome radius of 50mm.

$$S_n = D - r_1$$

Substituting $S_n = 5000 - 50$

$$= 4950\text{mm}$$

Now compare the difference of object vertex distance for sea water with an index of 1.343 and distilled water with an index of 1.333 by substituting the numbers into the formula for vertex object distance $S_o = \dfrac{1.333}{\dfrac{1.343}{4950} + \dfrac{1.343-1.333}{50}}$

$$S_o = 2828\text{mm}$$

The revised nodal object distance is $D_o = S_o + r_1$

Substituting, $D_o = 2878\text{mm}$

This example shows that when an underwater camera with a dome window as part of the lens system is focused for a nodal object distance of 5 meters in sea-water, the object focus will shift to almost half when operated in distilled water or water of similar refractive index. The following graph gives the relationship between vertex object distance and refractive index for various radii of the dome window.

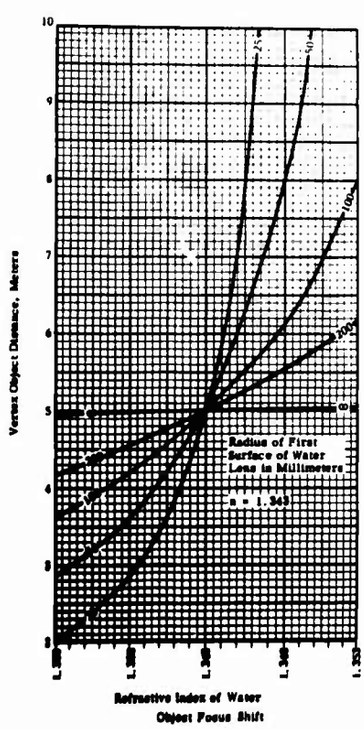

Fig. 7

If it is important to minimize the object focus shift, the radius of the first surface should be increased; the least amount of shift occurs when the radius of the first surface is infinity or close to it. Examples of a system using a first surface radius of infinity is the Ivanoff Corrector, the Hopkins f/4.5 underwater lens and any plane parallel port in conjunction with an air lens.

This shift of object nodal distance can become a serious problem for photogrammetric purposes using fixed focus underwater cameras. It will be necessary to know the environmental conditions and the amount of magnitude of the refractive index to arrive at proper data reduction. One simple way to solve this problem is to use short focal length lenses which tend to have a great depth of field or have variable focusing on the camera.

Now let us consider the nodal image distance. The first and second focal lengths vary with change in the refractive index. However, for a dome window lens system the image nodal distance does not change with varying refractive index as long and the first and second nodal points are located at the curvature of the first surface of the lens. This is referred to as the concentric condition. This is of particular significance because as long as the image nodal distance remains constant, no mathematical corrections have to be made for analytical calculations.

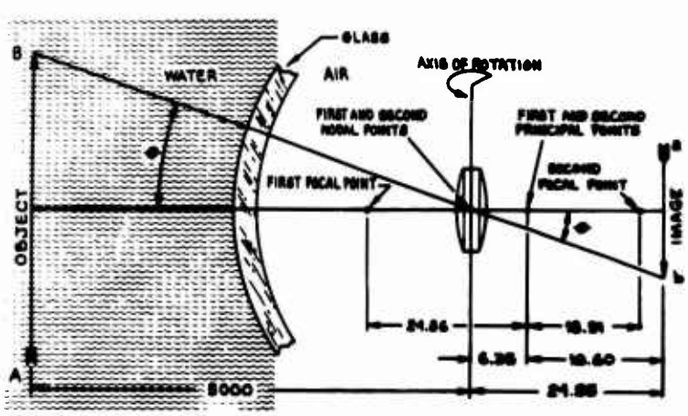

Cardinal Points of Underwater Lens System

Fig. 8

The camera can be calibrated in any type of water. For an analysis let's investigate the planar condition. The second focal length f' of an underwater lens with a planar first surface remains constant even though the refractive index changes. The first focal length f for index n is

$$f = nf'$$

Then for n_o

$$f_o = n_o f'$$

The difference in first focal length is

$$f - f_o = f' \ (n - n_o)$$

Since f' is constant for the planar condition, the difference in the first focal lengths is directly proportional to the difference in the water refractive index. The difference in nodal image distances of d and d_o is approximately equal to the difference in their respective first focal lengths. Therefore, if the refractive index changes by 2% then the image nodal distance and therefore lateral magnification changes by two percent.

Therefore, for a planar condition the object nodal distance does not change but the image nodal distance and lateral magnification changes, for a concentric lens system, the nodal object distance changes but the nodal image distance does not. This alone could establish a criteria of selection of either type of lens system. Another important criteria is the versatility of the optical system. Plane parallel port systems can be used with any type of lens as long as the picture angle is small. With an Ivanoff Corrector, the versatility is somewhat reduced in that the Corrector has to be made large enough to cover numerous focal length lenses and numerous apertures. This becomes difficult for long focal length lenses with large apertures because of the physical size of the corrector. Also it is desirable to use the Corrector with highly corrected air lenses. Concentric dome windows if properly built can be used with alarge variety of lenses, either specifically designed for the camera or standard of-the-shelf systems. In one system presently on the market, the dome window handles any kind of lens from 7.5mm to 135mm focal length lenses for a 35mm format. Additionally, there is the versatility of having a turret behind the dome window for different angular coverage. Since the virtual image is located at a certain vertex object distance for a given situation, all that is necessary is to make sure that when the lenses are mounted on a turret is the their respective entrance pupils fall at the center of curvature of the first surface.

The Concentric Dome has the best physical characteristics especially for deep ocean photography. The arch cross section is an ideal structural shape to withstand the pressure of external fluids. Glass excels in compression and is inferior in tension. Since the stress involved for this shape is compression, glass performs an outstanding task in this regard. In contrast to this, the plane parallel port and Ivanoff Corrector is under tension because the front element is flat.

CONCLUSION

Laboratory tests confirmed the theory that lenses which are designed for underwater photography will out perform lenses designed for air photography and later adapted for underwater imaging. The choice between an Ivanoff Corrector and a Concentric Dome is left up to the individual and their application. Ocean bottom photography would prefer a concentric dome window because of its structural shape. Also the concentric dome offers versatility as far as angular coverage is concerned. For hand-held operations, the Ivanoff Corrector and the Concentric Dome offer equal photographic advantages. For photogrammetric work, the concentric approach is recommended. Underwater photoimaging systems should be tested prior to actual use.