UNCLASSIFIED

AD NUMBER

AD875525

NEW LIMITATION CHANGE

TO

Approved for public release, distribution unlimited

FROM

Distribution authorized to U.S. Gov't. agencies and their contractors; Critical Technology; AUG 1970. Other requests shall be referred to Air Force Flight Dynamics Laboratory, Attn: FDTT, Wright-Patterson AFB, OH 45433.

AUTHORITY

AFFDL ltr dtd 25 Oct 1972

THIS PAGE IS UNCLASSIFIED

AFFDL-TR-70-18

AD-875 525

A TRANSDUCER FOR CONTROLLING SIMULATED AERODYNAMIC HEATING

WILLIAM E. ALEXANDER

TECHNICAL REPORT AFFDL-TR-70-18

WRIGHT-PATTERSON
TECHNICAL LIBRARY
WPAFB, O.

AUGUST 1970

20070921527

This document is subject to special export controls and each transmittal to foreign governments or foreign nationals may be made only with prior approval of Air Force Flight Dynamics Laboratory (FDTT), Wright-Patterson Air Force Base, Ohio 45433.

AIR FORCE FLIGHT DYNAMICS LABORATORY
AIR FORCE SYSTEMS COMMAND
WRIGHT-PATTERSON AIR FORCE BASE, OHIO

PROPERTY OF USAF

NOTICE

When Government drawings, specifications, or other data are used for any purpose other than in connection with a definitely related Government procurement operation, the United States Government thereby incurs no responsibility nor any obligation whatsoever; and the fact that the government may have formulated, furnished, or in any way supplied the said drawings, specifications, or other data, is not to be regarded by implication or otherwise as in any manner licensing the holder or any other person or corporation, or conveying any rights or permission to manufacture, use, or sell any patented invention that may in any way be related thereto.

Copies of this report should not be returned unless return is required by security considerations, contractual obligations, or notice on a specific document.

200-October 1970-CO305-6-71-94

AFFDL-TR-70-18

A TRANSDUCER FOR CONTROLLING SIMULATED AERODYNAMIC HEATING

WILLIAM E. ALEXANDER

WRIGHT-PATTERSON
TECHNICAL LIBRARY
WPAFB, O.

This document is subject to special export controls and each transmittal to foreign governments or foreign nationals may be made only with prior approval of Air Force Flight Dynamics Laboratory (FDTT), Wright-Patterson Air Force Base, Ohio 45433.

Distribution of this document is limited because it contains performance information on an advanced USAF test facility.

FOREWORD

This report was prepared by personnel of the Experimental Branch, Structures Division, Air Force Flight Dynamics Laboratory (FDTT), Wright-Patterson Air Force Base, Ohio. The reported development was accomplished under Project No. 1347, "Structural Testing of Flight Vehicles," Task No. 134702, "Measurement of Structural Response," managed by Mr. Vincent Kearney (FDTT). The principal investigator was Mr. William E. Alexander, formerly of FDTT but now a member of the Experimental Engineering Branch, Flight Mechanics Division (FDMN). Preliminary reports are filed as progress reports under Work Unit No. 134702 002, "Infrared Sensitive Transducers." All efforts were carried out in the fabrication and testing facilities of FDTT.

This report covers work conducted during the period November 1966 to August 1967. It was submitted by the author in March 1969.

The transducer was conceived and designed by the principal investigator. Mr. Robert Schneider (FDTT) was the Project Test Engineer, and Mr. Bernard Davis (FDTT) was the Instrumentation Test Engineer. The prototype models were constructed with the assistance of Mr. Willie Woods, Instrumentation Technician (FDTT).

This technical report has been reviewed and is approved.

ROBERT L. CAVANAGH
Chief, Experimental Branch
Structures Division
Air Force Flight Dynamics Laboratory

ABSTRACT

Each phase of the development of a net thermal radiation transducer, and a technical summary of the net radiation concept and its usefulness to structural testing technology are covered in this report.

The transducer has two thin metal disks which receive radiant thermal energy from two opposing sources. Each disk is thermally isolated from the other and welded at its periphery to a water cooled heat sink. When radiant flux impinges on the surface of each disk, heat is conducted radially toward the heat sink. The resulting difference of temperature between each disk center and periphery is proportional to the absorbed radiant thermal flux. Two thermocouples monitor the temperatures at the center of each disk so that the difference in their signals is proportional to the net thermal flux impinging on the disks. It was demonstrated by evaluation tests that the net value of the thermal flux impinging on the disks is proportional to the simulated aerodynamic heating of a test structure when the transducer is positioned between a radiating structure and a radiating heat source.

TABLE OF CONTENTS

SECTION		PAGE
I	INTRODUCTION	1
II	NET RADIATION CONCEPT	4
III	DESIGN OF THE NET RADIATION INSTRUMENT	8
IV	CALIBRATION	13
V	EVALUATION TESTS	17
VI	SUMMARY AND CONCLUSIONS	22
	APPENDIX STRUCTURAL TESTING APPLICATION CONCEPTS OF NET RADIATION INSTRUMENTS	23
	REFERENCES	24

ILLUSTRATIONS

FIGURE		PAGE
1.	Computer Controlled Heating	2
2.	Thermal Radiation with Nonabsorbing Media Between Surfaces	5
3.	Net Thermal Flux Measurement Concept	7
4.	Prototype Net Radiation Thermal Fluxmeter	9
5.	Exploded View of the Net Radiation Thermal Fluxmeter	10
6.	Cooling Water Channel of the Fluxmeter	11
7.	Comparative Calibration Setup	14
8.	Calibration Curves	16
9.	Simulated Structure	18
10.	Test Setup	19
11.	Evaluation Results	21

TABLES

TABLE		PAGE
I	Upper Fluxmeter Disk Calibration Data	15
II	Lower Fluxmeter Disk Calibration Data	15
III	Test Measurements	19
IV	Test Data	20

SYMBOLS

C	product of x, ρ, C_p, cal/cm^2 °C
C_p	specific heat, cal/gm °C
F_A	effective view factor
F_ϵ	effective emittance factor
R	disk radius
T_{av}	average temperature, °C
T_{aw}	adiabatic wall temperature, °C
T_C	disk center temperature, °C
T_E	disk edge temperature, °C
T_H	heater temperature, °C
T_o	initial temperature, °C
T_{RS}	structural rear surface temperature, °C
T_S	structural front surface temperature, °C
$\frac{dmv}{dT}$	thermoelectric power of the disk temperature sensors, mv/°C
h	convective heating coefficient, cal/cm^2 °C
h_L	heat loss coefficient, cal/cm^2 °C
k	thermal conductivity, cal-cm/cm^2-sec-°C
mv	millivolts
$\dot{q}_1$	preprogrammed aerodynamic heat flux, cal/cm^2-sec
$\dot{q}_2$	actual heat transfer rate through the surface of a structure, cal/cm^2-sec
$\dot{q}_H$	heater radiosity, cal/cm^2-sec
$\dot{q}_s$	structural radiosity, cal/cm^2-sec
$\Delta \dot{q}$	net thermal radiation between heater and structure, cal/cm^2-sec
t	time, sec
x	thickness, cm

SYMBOLS (CONTD)

ϵ_D	disk emissivity
ϵ_S	structural emissivity
σ	Stephan-Boltzmann constant, cal/cm^2-sec °C^4
ρ	density, gm/cm^3

SECTION I

INTRODUCTION

In 1953 research and development efforts were initiated within the Air Force which led to the development of computational equipment for controlling the thermal inputs to aircraft structures during testing. Although this computing system provided the needed method of synchronizing heating cycles and mechanical load cycles throughout a simulated flight mission profile, certain parameters were neglected in deriving the heat equation which cannot be totally ignored in today's more advanced test programs. For example, the effects of internal radiations, conduction, and convection were considered nil in defining the heat balance for a point on the outer surface of a flight vehicle.

The equations derived as reported in Reference 1 are

$$\dot{q}_1 = h(T_{aw} - T_S) - \sigma \epsilon_S T_S^4 \tag{1}$$

which is the fundamental equation adapted to computer solution and thermal test control; and

$$\dot{q}_2 = C \frac{dT_S}{dt} \tag{2}$$

where $\dot{q}_1$ is the required instantaneous heat input to the structure and $\dot{q}_2$ is the actual heat input. Precalculated values of T_{aw}, h, and C, provide open loop computer input data. T_S is a closed loop computer input (see Figure 1).

The accurate determination and measurement of these input data are difficult to ensure and, therefore, comprise an applications problem area with this method.

A second application problem is encountered in testing thick structures at very high temperatures. The solution of Equation 2 using surface temperature rise rate data as an approximation of the average temperature rise rate of a thin aircraft skin was acceptable within a few seconds after the start of a test. On thick structures, however, a good approximation may not be achieved at any time during the test. To account for the actual heating of these structures a measurement of internal radiant heat losses, thermal conduction, and convection, is important.

(RC) REFERENCE CALCULATION:

$$h(T_{aw} - T_S) - \sigma \epsilon T_S^4$$

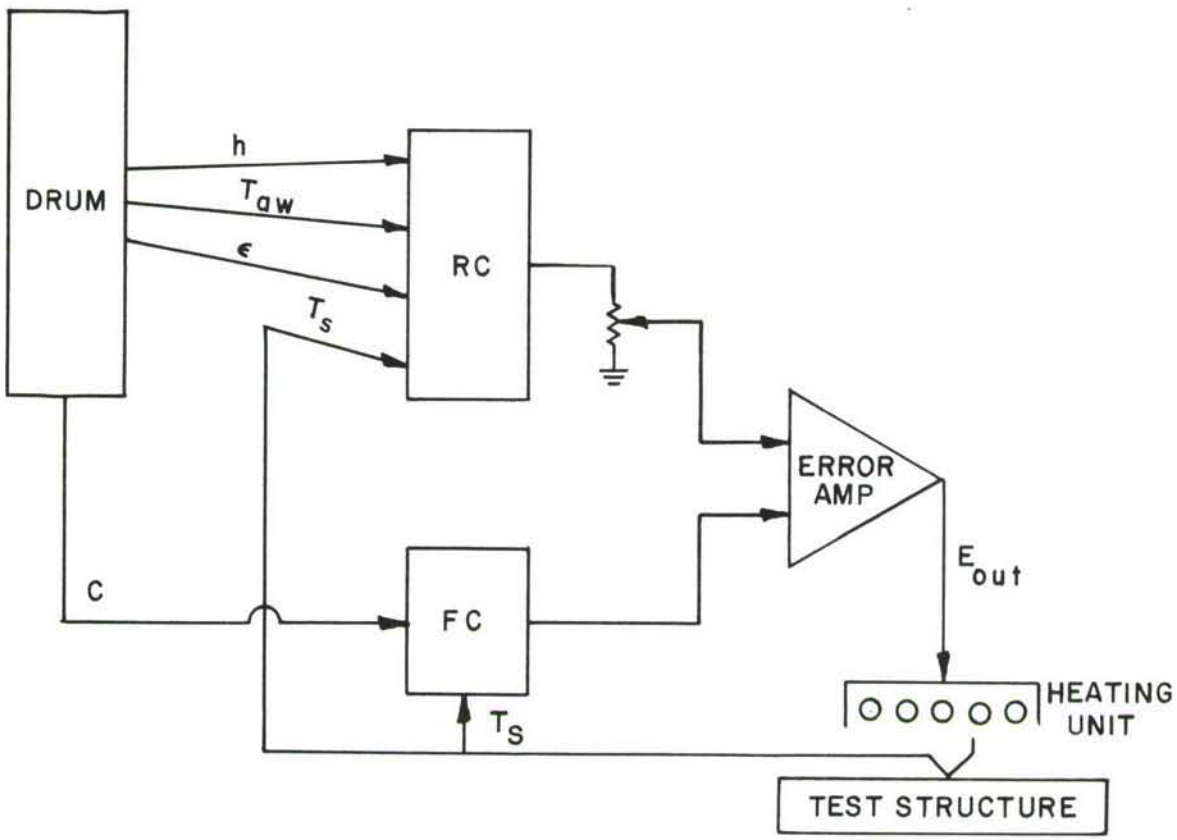

(FC) FEEDBACK CALCULATION:

$$C \frac{dT_S}{dt}$$

Figure 1. Computer Controlled Heating

Studies of these thermal control problem areas lead to considerations of other means to control simulated aerodynamic heating. The most appropriate means considered is a Gardon type device described by Plenier (Reference 2). This device gives a very accurate measurement of the radiant heat output of a heat source. Plenier showed that the device would give a measurement of aerodynamic heating if the structural surface was treated with a coating identical to that of the sensitive area of the device.

The subject device is also a Gardon type, but is constructed to measure the radiant outputs of the heat source and the structure as two opposing heat

sources. Thus a measurement of the net heat transfer rate between these two sources is obtained and provides a measurement of the rate at which heat is transferred into the structure.

SECTION II

NET RADIATION CONCEPT

The rate of heat absorption of a test structure results from a radiant thermal power interchange between the heater and the structure. This interchange involves the heater output, its reflective characteristics, and the structure's emitting and reflective characteristics, surface temperature, and the view the two surfaces have of each other.

Considering the two surfaces in Figure 2a to be black, opaque infinite surfaces, then the net radiation absorbed by either surface is the difference in the radiation between them. This is expressed by

$$\Delta \dot{q} = \sigma (T_H^4 - T_S^4) \tag{3}$$

In the case where these surfaces are not black, but gray bodies and opaque, as shown in Figure 2b, then the gray surface A_H of emissivity and absorptivity ϵ_H, opposite the gray surface A_S of emissivity and absorptivity ϵ_S, exchange radiation in the following manner. Surface A_H emits $\epsilon_H \sigma T_H^4$ cal/cm^2-sec, of which the fraction ϵ_S is absorbed and $(1 - \epsilon_S)$ is reflected back toward A_H, $(1 - \epsilon_S)\epsilon_H$ is absorbed at A_H and $(1 - \epsilon_H)(1 - \epsilon_S)$ is reflected toward A_S. The multireflection and absorption process is recurrent so that the total absorption at A_S is expressed by an infinite geometrical series. This series,

$$\dot{q}_{H-S} = A_H \sigma T_H^4 \epsilon_H \epsilon_S \left[1 + (1 - \epsilon_S)(1 - \epsilon_H) + (1 - \epsilon_S)^2 (1 - \epsilon_H)^2 + (1 - \epsilon_S)^3 (1 - \epsilon_H)^3 + \cdots \right], \tag{4}$$

$$= A_H \sigma T_H^4 \left(\frac{1}{\frac{1}{\epsilon_H} + \frac{1}{\epsilon_S} - 1} \right) \tag{5}$$

The term

$$\frac{1}{\frac{1}{\epsilon_H} + \frac{1}{\epsilon_S} - 1}$$

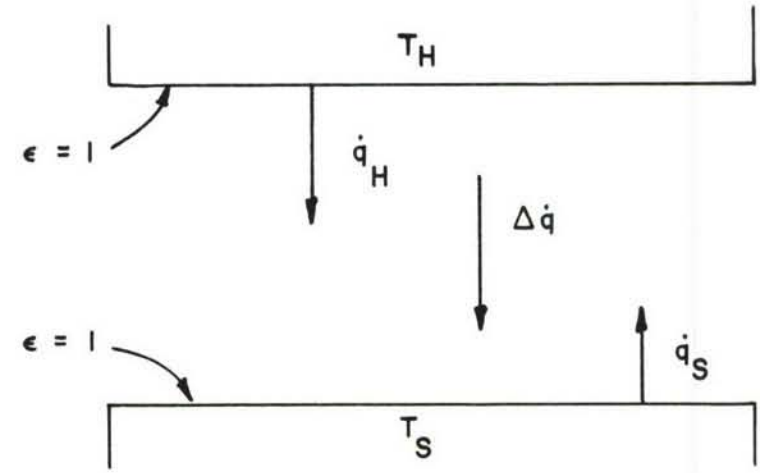

$T_H > T_S$

(2a)

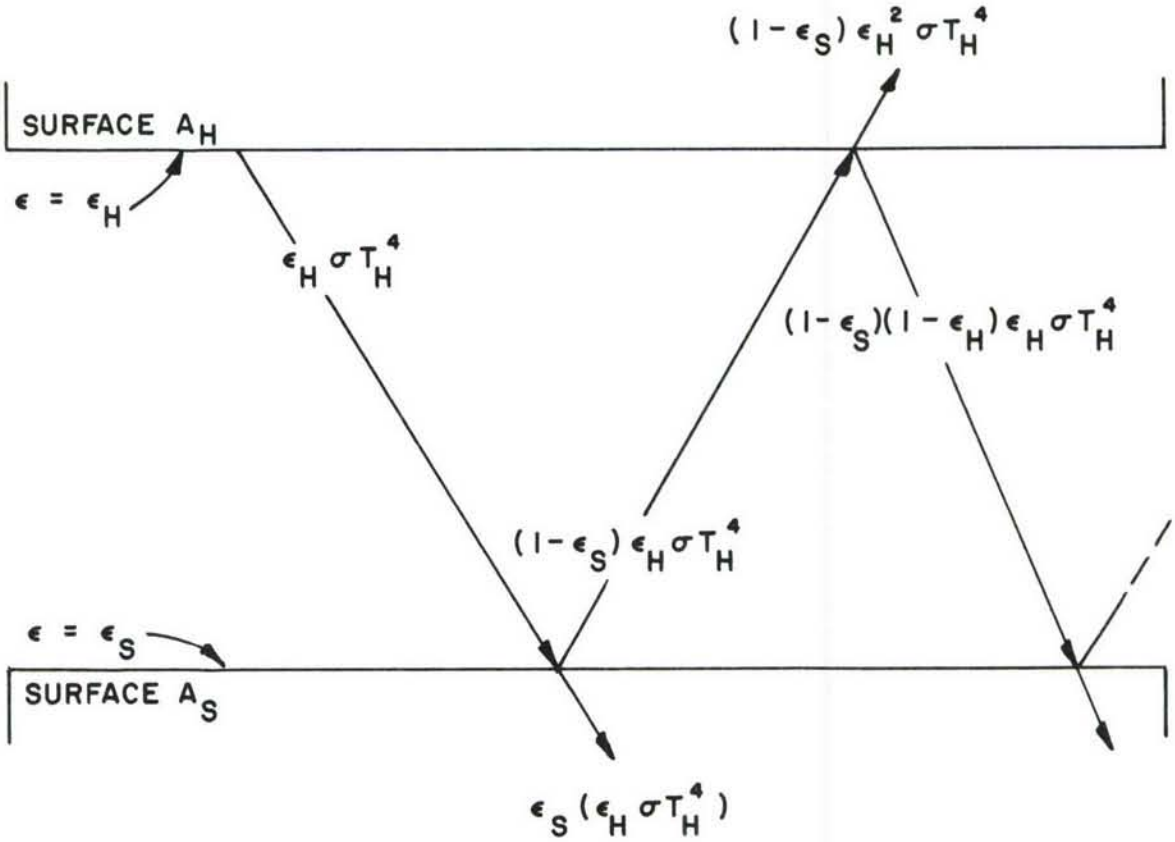

(2b)

Figure 2. Thermal Radiation with Nonabsorbing Media Between Surfaces

is symmetrical with respect to both surfaces so the net exchange is

$$\Delta \dot{q} = \sigma A \left(\frac{1}{\frac{1}{\epsilon_H} + \frac{1}{\epsilon_S} - 1} \right) (T_H^4 - T_S^4) \tag{6}$$

If the two surfaces are not infinite, the exposure that each has to the thermal power emanating from the direction of the other must be considered and the symmetrical factor differs from that in Equation 5. In general for noninfinite parallel planes,

$$\Delta \dot{q} = F_\epsilon F_A \sigma (T_H^4 - T_S^4) \tag{7}$$

The values of F_ϵ and F_A can be found for special cases in most basic radiation heat transfer textbooks. During structural testing the special cases are usually two squares or rectangles in parallel planes directly opposite one another, or two concentric cylinders. These are descriptive of a flat water cooled reflector heater assembly positioned to heat a surface of a box beam, or a curved heater positioned to heat a curved structural section. More complicated cases are also covered in tables of efficiency factors (effective emissivity). All the factors are symmetrical so that the resulting equations have the general form expressed above. This form shows that the radiant environment can be considered to have two components which are the radiosity of the heater,

$$\dot{q}_H = F_\epsilon F_A (T_H^4 - T_o^4) \tag{8}$$

and the radiosity of the structural surface,

$$\dot{q}_S = F_\epsilon F_A (T_S^4 - T_o^4) \tag{9}$$

A difference measurement of $\dot{q}_H$ and $\dot{q}_S$ will yield a measurement of the rate at which heat is transferred through the structural surface. This transfer rate includes the rate of heat conducted, the rate transmitted without absorption, and the loss from the rear surface of the structure. Therefore the measurement of the net thermal radiation between the laboratory heaters and the structure yields an operational definition of simulated aerodynamic heating. The concept of measuring the net radiation is illustrated in Figure 3.

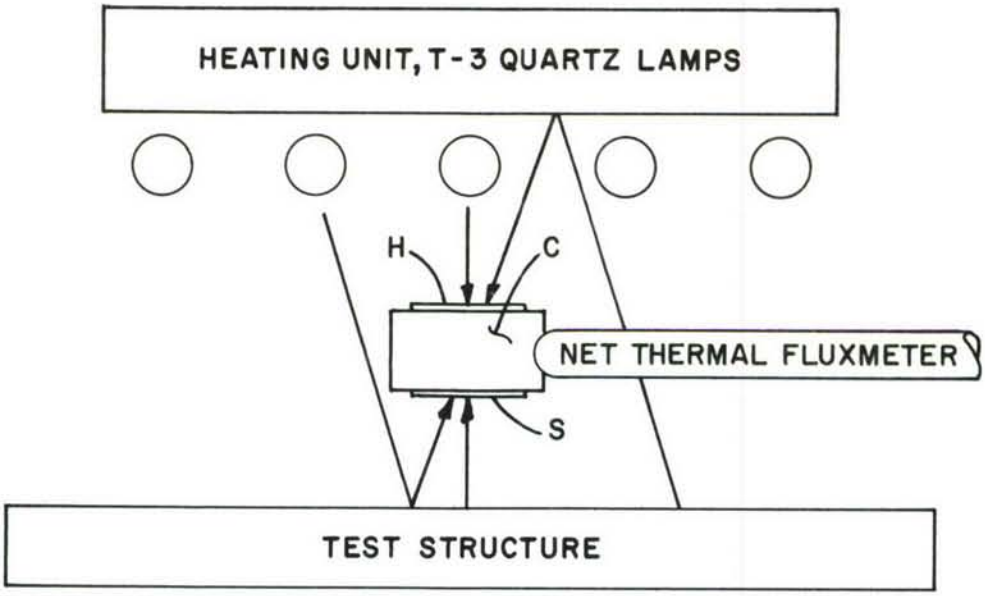

SYMBOL FOR RADIANT THERMAL FLUX

H DENOTES SENSOR WHICH MEASURES THE RADIOSITY OF THE HEATING UNIT

S DENOTES SENSOR WHICH MEASURES THE RADIOSITY OF THE STRUCTURE

C DENOTES A WATER COOLED HEAT SINK

THE MEASURENT DIFFERENCE TAKEN BY (H – S) IS PROPORTIONAL TO THE STRUCTURAL HEATING

Figure 3. Net Thermal Flux Measurement Concept

SECTION III

DESIGN OF THE NET RADIATION INSTRUMENT

The net thermal fluxmeter has two thin metal disks which receive radiant energy from two opposing sources. Each disk is thermally isolated from the other and welded at its periphery to a water cooled heat sink. When radiant thermal flux impinges on the surface of each disk, heat is absorbed and conducted radially outward toward the heat sink. As a result, a difference in temperature between each disk center and periphery is created in proportion to the radiant thermal flux absorbed by the disks. The relationship of this temperature difference and absorbed thermal flux in terms of this study is expressed by

$$(T_C - T_E)_H = \frac{\dot{q}_H \epsilon_D R^2}{4\,kx} \tag{10}$$

for the disk positioned to intercept the heater thermal flux, and

$$(T_C - T_E)_S = \frac{\dot{q}_S \epsilon_D R^2}{4\,kx} \tag{11}$$

for the opposing disk which faces the structure (Reference 2). These temperatures are measured thermoelectrically, so that the voltage measurement of their difference,

$$(T_C - T_E)_H \frac{dmv}{dT} = mv_H \tag{12}$$

is a proportional measurement of $\dot{q}_H$. Therefore, the net thermal flux interchange between the heater and the structure is measurable electrically in accordance with

$$mv_H - mv_S = f\left[\left(\frac{\epsilon_D R^2}{4\,kx}\right)(\dot{q}_H - \dot{q}_S)\right] \tag{13}$$

Figure 4 is a picture of a prototype fluxmeter designed by the author to give net radiation measurement. Figure 5 shows a breakdown of its various components.

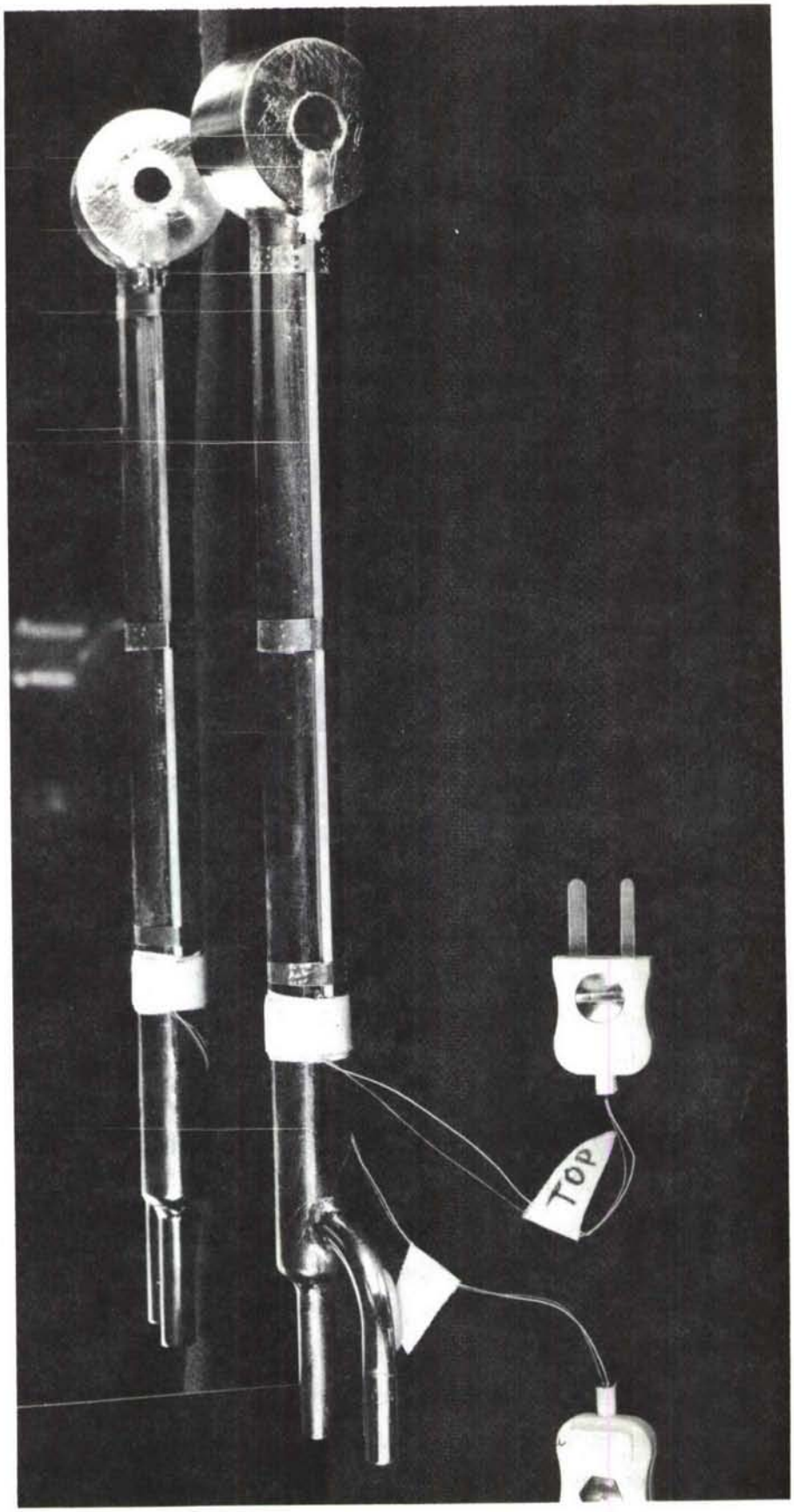

Figure 4. Prototype Net Radiation Thermal Fluxmeter

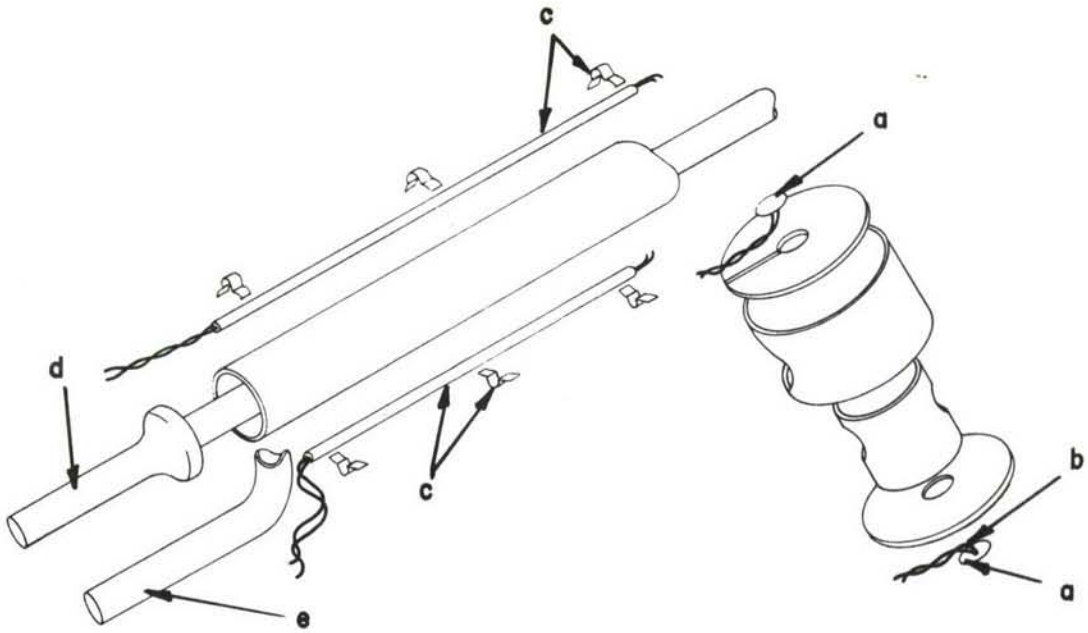

Figure 5. Exploded View of the Net Radiation Thermal Fluxmeter. Components shown are (a) thermally sensitive disks, (b) center thermocouple, (c) thermocouple insulation tubes and tie downs, (d) water inlet tube, (e) water outlet tube. The thermocouples attached to the disk edge are not shown. The unlabeled parts make up the water flow channel and circular heat sink.

The fluxmeter was formed with three basic components: (1) a copper water-cooled heat sink and flow tubes which form the main body assembly; (2) two 0.002 in. thick low-conductivity metal disks which form the thermally sensitive elements; and (3) two fine wire thermocouples. Referring to Figure 5, the main body assembly consists of a 1/4 in. OD x 8 3/4 in. copper tube which extends concentrically through a 1/2 in. OD x 7 in. copper tube. These tubes are mated to a double walled, hollow, right circular, copper cylinder. The cylindrical walls are 3/16 in. thick. These copper parts were brazed together to form a water channel so the water passes into the smaller tube, flows through the circular heat sink and out the larger tube. (See Figure 6.) The central hole in the circular heat sink is 1/4 in. in diameter and is bisected by the inlet water tube forming two cavities. The sensitive disks were welded into positions which sealed these cavities thereby allowing the inlet water tube to also isolate the disks from one another thermally. Prior to welding the disks in

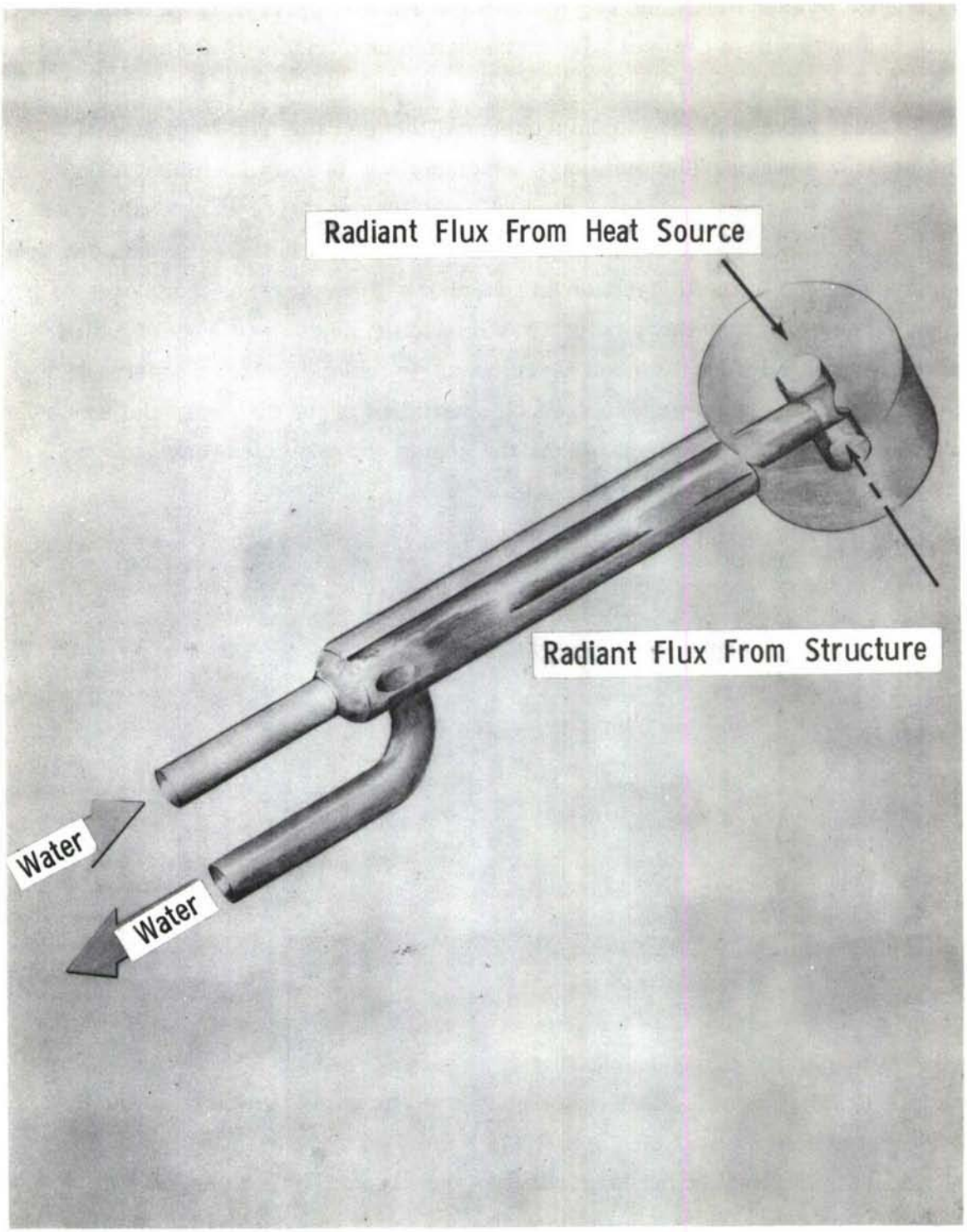

Figure 6. Cooling Water Channel of the Fluxmeter

place, a fine wire Chromel/Alumel thermocouple was welded to the center and to the edge of each disk. The thermocouple leads extend from underneath the disks and pass within grooves filed in the heat sink surface. In Figure 4 these grooves are covered with nichrome strips. Alumina insulators protect the extended leads from exposure to environmental thermal flux and were attached with nichrome strips. The main body assembly was plated with nickel to increase its reflectivity and the cavity walls and disk surfaces were coated with lamp black to increase absorptivity. In a simpler construction, the disk can be employed as one of the thermoelectric elements of a difference thermocouple by attaching common type thermoelectric wires to the center and edge of a disk constructed of a different type of thermoelectric material. In the construction of this prototype, however, the Seebeck coefficient of the disk material was unknown. Thus, measurement of both the center and edge disk temperatures with individual thermocouples was required.

SECTION IV

CALIBRATION

The prototype net fluxmeter was calibrated in terms of voltage output versus radiant thermal flux input. A comparative calibration was performed (Reference 3) with a calibrated commercial Gardon type fluxmeter.

The net fluxmeter was positioned beside a calibrated commercial fluxmeter and both exposed to a uniformly radiating source. Figure 7 shows the two fluxmeters; the larger is the prototype. The cube shaped water cooled aluminum reflector with the tubular radiant heat lamps in the calibration heat source. During the calibration tests the fluxmeters were positioned centrally under this heat source rather than as shown in the figure. The certainty that each would intercept the same value of radiant thermal flux was ensured by a preliminary survey of the heater output. The maximum deviation measured over the 8 in. x 8 in. projected area in which the calibrations were to be performed was only 0.0705 cal/cm^2-sec at 6.1 cal/cm^2-sec in the 1/2 in. peripheral area. No deviation of thermal flux was detected within the area central of the plate.

Tables I and II show the data which were averaged to produce calibration points for the two fluxmeter disks. The upper disk intercepted radiation from the heater and the lower disk intercepted radiation from the structure. Figure 8 shows the resultant calibration curves.

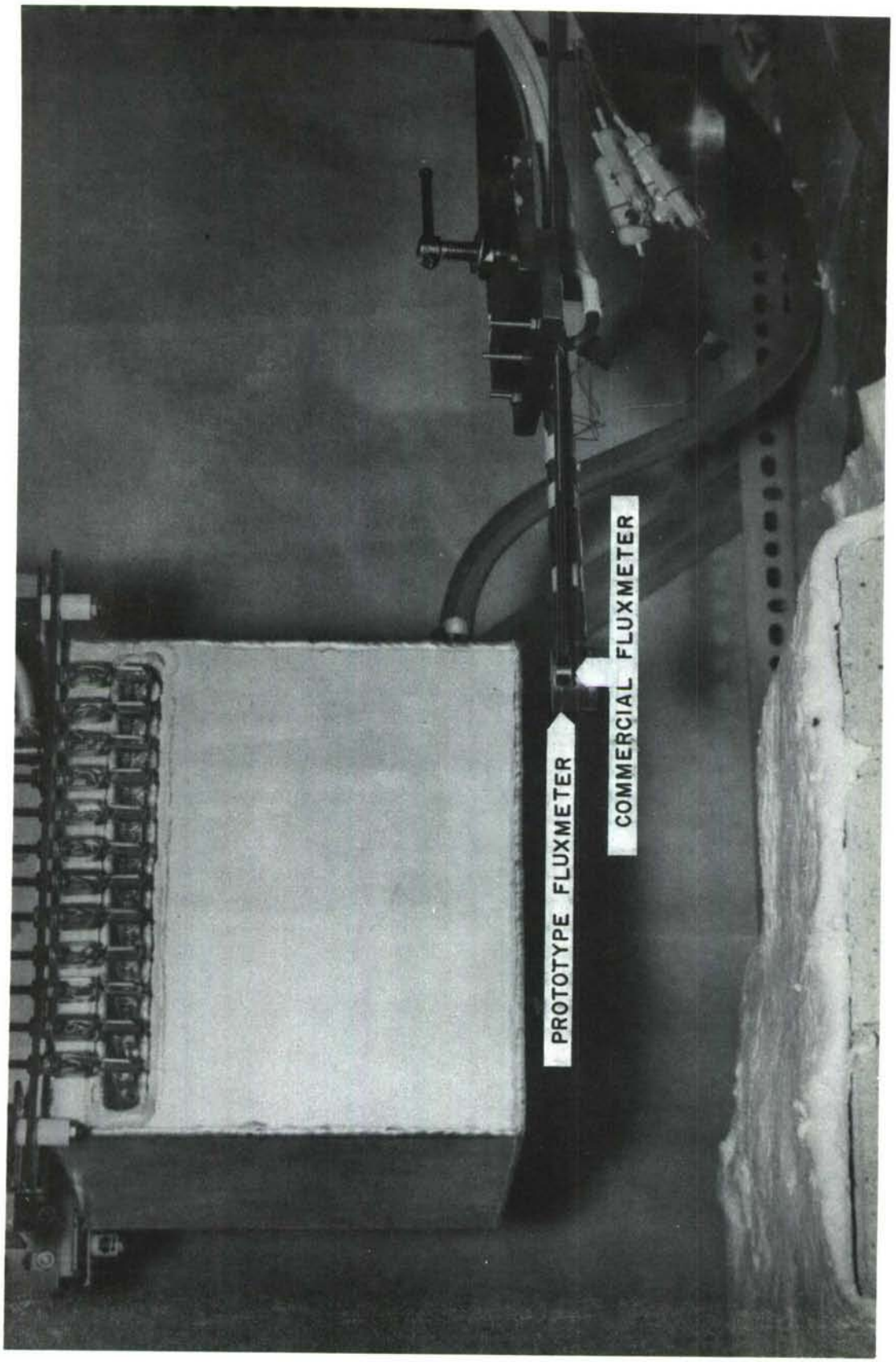

Figure 7. Comparative Calibration Setup

TABLE I

UPPER FLUXMETER DISK CALIBRATION DATA

PROTOTYPE FLUXMETER		COMMERCIAL FLUXMETER					
TEMPERATURE (°C)	OUTPUT (mv)	OUTPUT (cal/cm^2-sec)					AVERAGE OUTPUT (cal/cm^2-sec)
37.8	0.57	0.397	0.397	0.411	0.425	0.368	0.399
65.5	1.7	1.25	1.17	1.25	1.27	1.17	1.222
71.1	1.94	1.32	1.39	1.47	1.32	1.41	1.382
198.9	7.14	5.44	5.5	5.53	5.44	5.6	5.502
240.5	8.82	6.9	7.05	7.05	7.05	7.05	7.02

TABLE II

LOWER FLUXMETER DISK CALIBRATION DATA

PROTOTYPE FLUXMETER		COMMERCIAL FLUXMETER					
TEMPERATURE (°C)	OUTPUT (mv)	OUTPUT (cal/cm^2-sec)					AVERAGE OUTPUT (cal/cm^2-sec)
37.8	0.57	0.25	0.22				0.235
43.3	0.79	0.4	0.28*	0.411	0.425	0.386	0.401
87.8	2.64	1.53	1.44	1.61	1.47	1.5	1.51
104.4	3.33	2.06	1.76	1.93	2.06	2.03	1.968

* Value not used in determining the average value

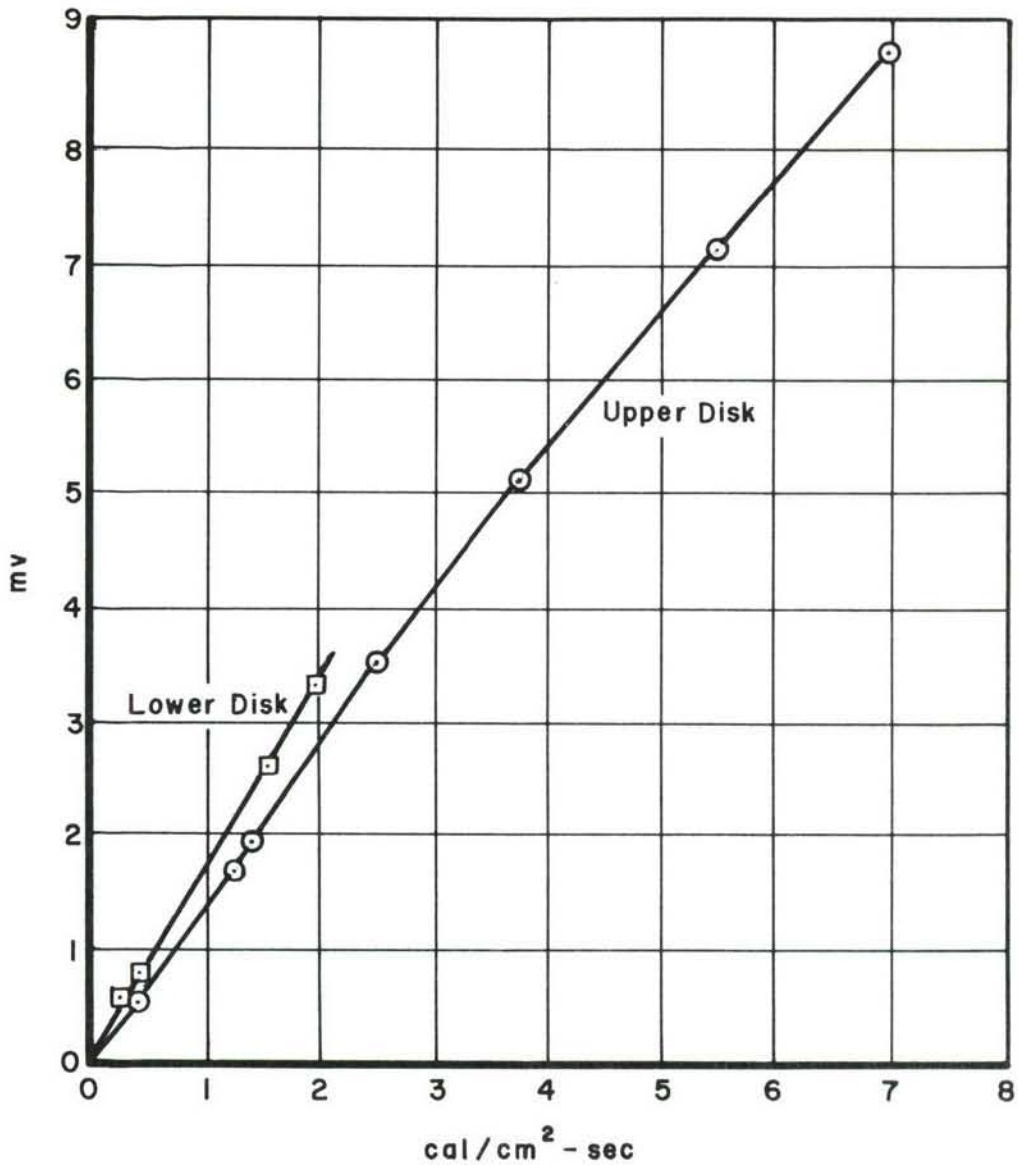

Figure 8. Calibration Curves

SECTION V

EVALUATION TESTS

The evaluation of the net fluxmeter required that some means of independent measurement be made as a standard of comparison. To provide this means a simulated structure of known thermophysical properties was instrumented with temperature sensors so that the rate of heat transfer through its surface could be calculated. The simulated structure (Figure 9) is an iron plate insulated on the rear surface. Thermocouples are welded on two surfaces to provide temperature measurements. The heat transfer rate through the surface of the iron plate can be calculated with the following equation

$$\Delta \dot{q} = C \frac{dT_{av}}{dt} + h_L (T_S - T_o) \tag{14}$$

where h_L is negligible due to the insulation layer at the sides and rear of the plate. This equation is solved with data taken during the heating periods when the temperature sensors indicate that $dT_S/dt = dT_{RS}/dt$.

Thereby dT_{av}/dt is identical to dT_S/dt or dT_{RS}/dt since all points within the solid are increasing at the same rate.

Five changes of heating conditions were imposed on the plate during a period of 20 minutes and 30 seconds, using a setup as shown in Figure 10. Only four periods of heating, however, were achieved wherein dT_S/dt was equal to dT_{RS}/dt. The data taken during these periods are presented in Table III and the interpretation of these data is presented below and in Table IV.

1. FLUXMETER NET THERMAL RADIATION MEASUREMENTS

The millivolt signals from the disk center thermocouples were converted to cal/cm^2-sec heating units by reference to the calibration curves. The difference of the measurements taken of the upper and lower disks was divided by 0.92, the absorptivity of the transfer standard fluxmeter sensitive disk, to yield the value of the net radiation between the heater and the structural surface. For example, at the test time of 399 seconds, the disk outputs of 2.08 and 0.7 mv are equivalent to 1.5 and 0.46 cal/cm^2-sec for the upper and lower disks,

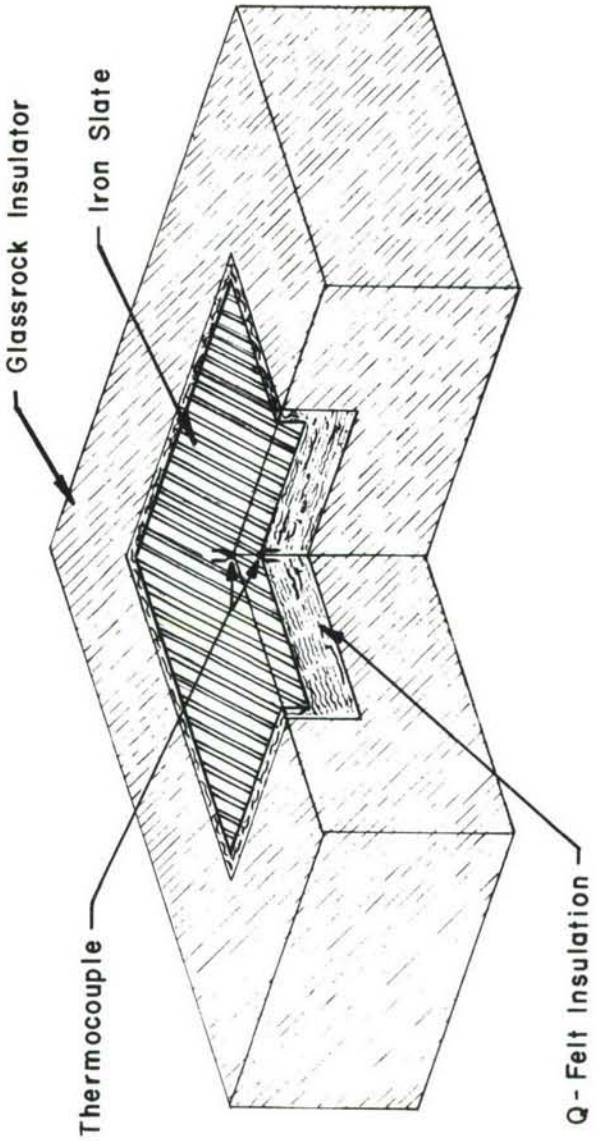

Figure 9. Simulated Structure

respectively. The difference of these values, 1.04 cal/cm^2-sec, divided by 0.92, gives 1.13 cal/cm^2-sec as the net thermal radiation.

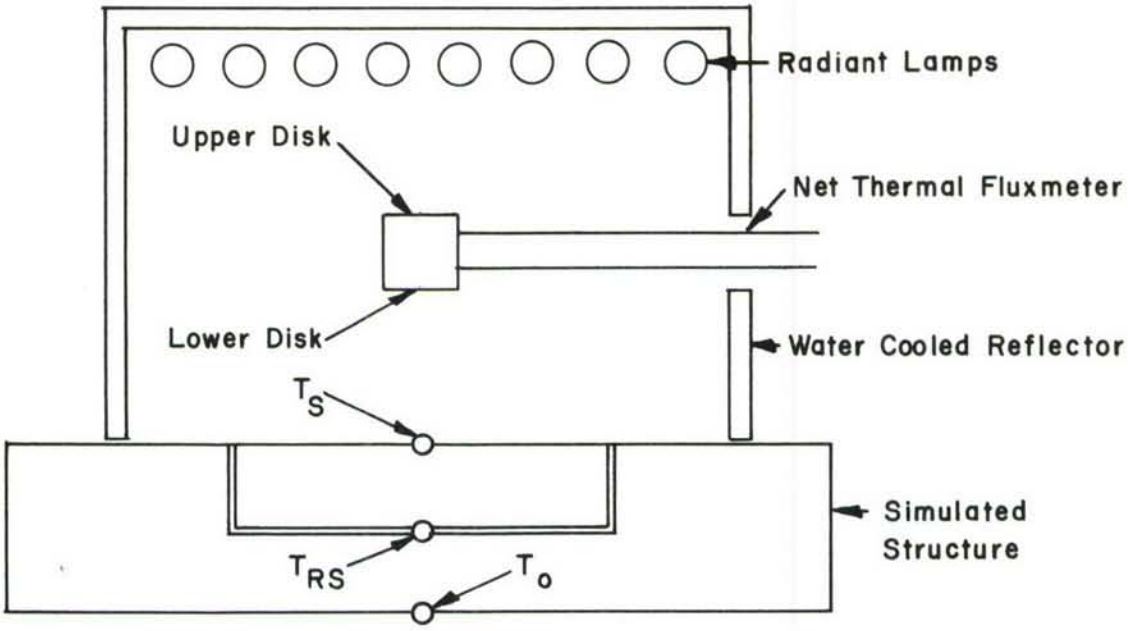

Figure 10. Test Setup

TABLE III
TEST MEASUREMENTS

TEST TIME (sec)	UPPER DISK OUTPUT (mv)	LOWER DISK OUTPUT (mv)	SPECIFIC* HEAT OF IRON (cal/gm)	T_{av} / dt (°C/sec)
180	1.94	0.61	0.105	0.76
270	1.99	0.68	0.12	0.76
360	2.08	0.7	0.13	0.76
399	2.08	0.7	0.13	0.76
500	4.18	1.53	0.14	1.35
548	4.25	1.61	0.145	1.35
600	6.74	2.8	0.175	2.0
1050	8.82	3.33	0.12	3.52

x = 1.27 cm
ρ = 7.9 gm
* Reference 4

TABLE IV
TEST DATA

TEST TIME (sec)	FLUXMETER NET MEASUREMENT (cal/cm^2-sec)	CALCULATED HEATING OF THE IRON PLATE (cal/cm^2-sec)
180	1.18	0.8
270	1.19	0.9
360	1.13	0.99
399	1.13	0.99
500	2.34	1.89
548	2.34	1.96
600	3.86	3.18
1050	5.52	4.24

2. CALCULATED HEATING OF THE IRON PLATE

Equation 14 was solved using thermophysical property data from Reference 4, and T_{RS} measurements. The evaluation result is presented as a plot of the calculated versus measured thermal flux in Figure 11.

This plotted test data shows that the net radiation thermal fluxmeter provides a proportional measurement of the rate at which thermal flux is transferred through the surface of the iron plate. Structural thermophysical property independence is evidenced by the observation that a change in the calculated flux occurs as a result of changes in specific heat with temperature, but the ratio of the measured and calculated flux values remains constant.

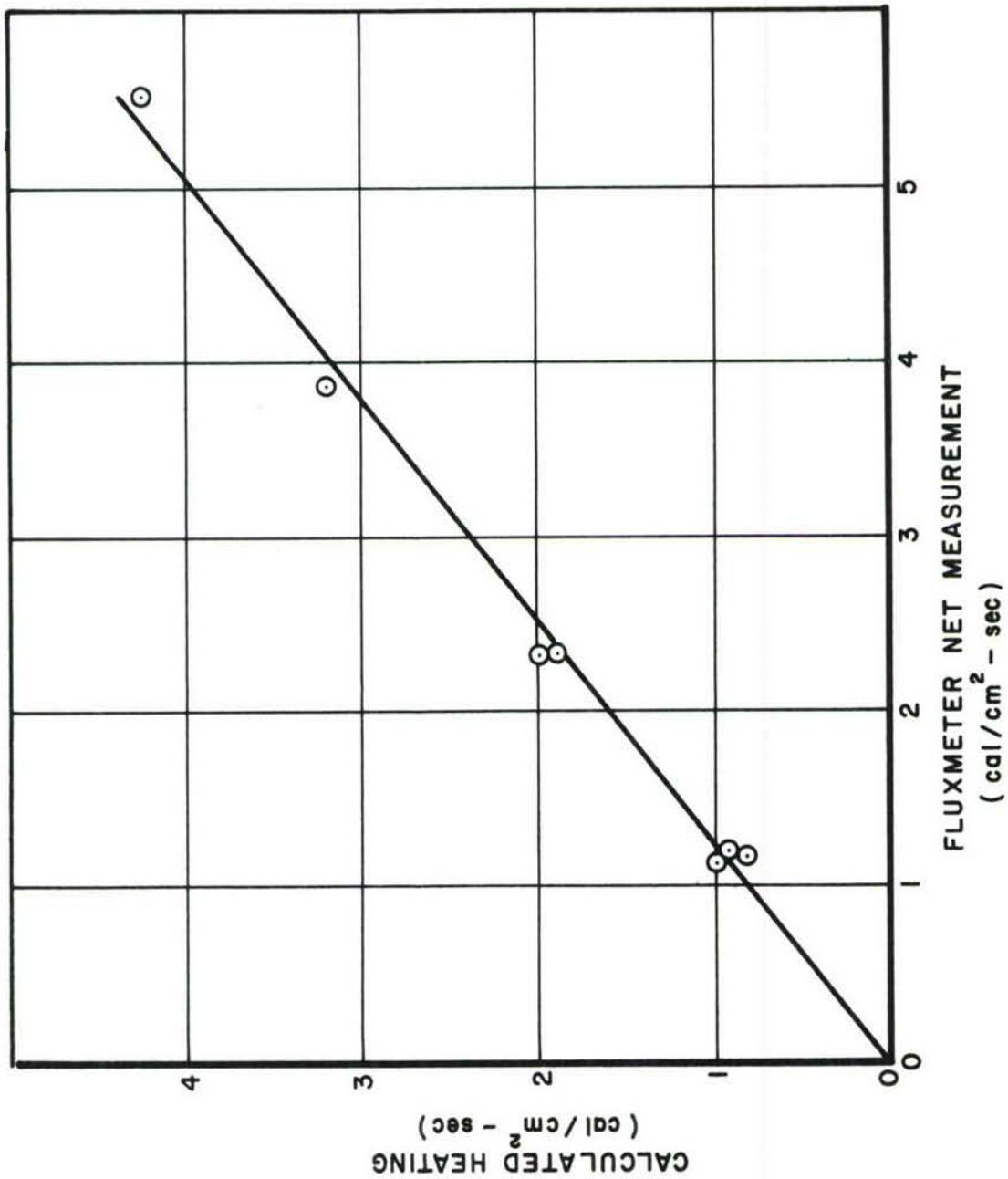

Figure 11. Evaluation Results

SECTION VI

SUMMARY AND CONCLUSIONS

A simple thermal flux control transducer has been proved feasible for use in an aerospace structural testing laboratory. This transducer overcomes the limitations of the more complex computer control technique and the thermal environmental control techniques which use conventional calorimeters and radiometer. These limitations consist of the necessity for (1) measuring structural surface temperature, (2) having a knowledge of structural thermophysical properties, and (3) having a knowledge of the structural thermal absorption character with the conventional techniques.

The new transducer measures the net thermal exchange occurring between a laboratory heater and the structure. Design of the transducer for high sensitivity and a particular time constant is a definite function of the properties of the materials of its construction, but the net thermal exchange measurement is achieved without a similar knowledge of the heat source or structure.

The evaluation of this new transducer included analytical, design, construction, and test phases of a prototype instrument. The usefulness of the net radiation measurement concept was demonstrated. Thermal convection sensitivity, an important limitation which compromises the validity of measurement made with the new transducer, was not demonstrated but can be encountered in practice if forced convection heating is prevalent in the vicinity of the net radiation transducer.

This new development, therefore, overcomes the major limitations of present thermal flux control techniques used in a structural laboratory and points out the single limitation--convection sensitivity of radiation measurement transducers--as the problem area to be resolved by future developments.

Several other applications of the concept to structural testing technology are inferred from this effort and are listed in the Appendix.

APPENDIX

STRUCTURAL TESTING APPLICATION CONCEPTS OF NET RADIATION INSTRUMENTS

1. MEASUREMENT AND CONTROL OF SIMULATED AERODYNAMIC HEATING

Achieved as outlined in the body of this report.

2. MEASUREMENT OF HEATER EFFICIENCY

Heater efficiency is the ratio of the rate at which power is transferred through the structural surface to the heater electrical power input per heater area. Therefore the difference output of the net radiation thermal fluxmeter divided by the electrical power (EI) is equal to the heater efficiency. This value is a function of the structural thermophysical properties and therefore is a more valid heater design parameter than a simple determination of the thermal power output capability of a given heater.

3. DETERMINATION OF HEATER FAILURE DUE TO TEMPERATURE

It is known that a heater operated in the open air will sustain a higher power input without thermal destruction than it will when situated opposite a test structure. If the power required to destroy the heater operated in open air is EI_A, then the heater will also fail during heating of a structure when the sum, rather than the difference, of the net thermal fluxmeter outputs approach EI_A.

4. MEASUREMENT OF ABSORPTIVITY

Absorptivity is the ratio of the thermal flux absorbed by the surface to that incident on the surface.

Therefore the ratio of the net fluxmeter output to the output of the net fluxmeter sensitive disk exposed to the heat source yields the absorptivity factor.

REFERENCES

1. Bondurant, R. L., et al., "Airframe Structural Integrity Testing, A Challenge in Automation," Unpublished Paper, Air Force Flight Dynamics Laboratory, Wright-Patterson Air Force Base, Ohio, April 1960.

2. Plenier, J., "Notes on Thermal Fluxmeter," Royal Aircraft Establishment, Farnborough, England, Library Translation No. 843, October 1959.

3. Pfeifer, G. D., "A Comparison and Evaluation of Several Radiant Energy Methods for Calibrating Heat Flux Sensors," Preprint No. 16.15-2-66, 21st Annual ISA Conference Proceedings, Vol 21, 1966.

4. Goldsmith, et al., Handbook of Thermophysical Properties of Solid Materials, Vol 1, The MacMillan Company, New York, 1961.

UNCLASSIFIED
Security Classification

DOCUMENT CONTROL DATA - R & D

(Security classification of title, body of abstract and indexing annotation must be entered when the overall report is classified)

1. ORIGINATING ACTIVITY *(Corporate author)* Air Force Flight Dynamics Laboratory Wright-Patterson Air Force Base, Ohio 45433	2a. REPORT SECURITY CLASSIFICATION UNCLASSIFIED 2b. GROUP

3. REPORT TITLE

A TRANSDUCER FOR CONTROLLING SIMULATED AERODYNAMIC HEATING

4. DESCRIPTIVE NOTES *(Type of report and inclusive dates)*
November 1966 - August 1967

5. AUTHOR(S) *(First name, middle initial, last name)*
William E. Alexander

6. REPORT DATE August 1970	7a. TOTAL NO. OF PAGES 35	7b. NO. OF REFS 4
8a. CONTRACT OR GRANT NO. b. PROJECT NO. 1347 c. Task No. 134702 d.	9a. ORIGINATOR'S REPORT NUMBER(S) AFFDL-TR-70-18 9b. OTHER REPORT NO(S) *(Any other numbers that may be assigned this report)* Work Unit 134702 002	

10. DISTRIBUTION STATEMENT This document is subject to special export controls and each transmittal to foreign governments or foreign nationals may be made only with prior approval of the Air Force Flight Dynamics Laboratory (FDTT), Wright-Patterson Air Force Base, Ohio 45433.

11. SUPPLEMENTARY NOTES	12. SPONSORING MILITARY ACTIVITY Air Force Flight Dynamics Laboratory Wright-Patterson AFB, Ohio 45433

13. ABSTRACT

Each phase of the development of a net thermal radiation transducer, and a technical summary of the net radiation concept and its usefulness to structural testing technology are covered in this report.

The transducer has two thin metal disks which receive radiant thermal energy from two opposing sources. Each disk is thermally isolated from the other and welded at its periphery to a water cooled heat sink. When radiant flux impinges on the surface of each disk, heat is conducted radially toward the heat sink. The resulting difference of temperature between each disk center and periphery is proportional to the absorbed radiant thermal flux. Two thermocouples monitor the temperatures at the center of each disk so that the difference in their signals is proportional to the net thermal flux impinging on the disks. It was demonstrated by evaluation tests that the net value of the thermal flux impinging on the disk is proportional to the simulated aerodynamic heating of a test structure when the transducer is positioned between a radiating structure and a radiating heat source.

DD FORM 1 NOV 65 1473

UNCLASSIFIED
Security Classification

14. KEY WORDS	LINK A ROLE	LINK A WT	LINK B ROLE	LINK B WT	LINK C ROLE	LINK C WT
Thermal Radiation Transducer						
Heat Flux Measurement						
Thermocouples						
Temperature Measurement						
Structural Testing						
Aerodynamic Heating Simulation						
Laboratory Test Equipment						