UNCLASSIFIED

AD NUMBER

AD874886

NEW LIMITATION CHANGE

TO

Approved for public release, distribution unlimited

FROM

Distribution authorized to U.S. Gov't. agencies and their contractors; Administrative/Operational Use; AUG 1970. Other requests shall be referred to Army Mobility Equipment Research and Development Center, Fort Belvoir, VA 22060.

AUTHORITY

USAMERDC ltr, 16 Jul 1971

THIS PAGE IS UNCLASSIFIED

AD

AD874886

AD No. ____
DDC FILE COPY

REPORT NUMBER 5293

FLUIDICS FOR CONTROL OF MILITARY FUEL HANDLING OPERATIONS

Final Report

D. D. Barnard
August 1970

U. S. Army Mobility Equipment
Research and Development Center
Fuels Handling Equipment Division
Fort Belvoir, Virginia 22060

Contract No. DAAK02-69-C-0123

The Bendix Corporation
Bendix Research Laboratories
Southfield, Michigan 48075

DDC
RECEIVED
OCT 1 1970
B

This document is subject to special export controls and each transmittal to foreign governments or foreign nationals may be made only with prior approval of the U. S. Army Mobility Equipment Research and Development Center, Fort Belvoir, Virginia 22060

10

REPORT NUMBER 5293

FLUIDICS FOR CONTROL OF MILITARY FUEL HANDLING OPERATIONS

Final Report

D. D. Barnard
August 1970

U. S. Army Mobility Equipment
Research and Development Center
Fuels Handling Equipment Division
Fort Belvoir, Virginia 22060

Contract No. DAAK02-69-C-0123

D/A Project No. 1J664717D58410

The Bendix Corporation
Bendix Research Laboratories
Southfield, Michigan 48075

This document is subject to special export controls and each transmittal to foreign governments or foreign nationals may be made only with prior approval of the U. S. Army Mobility Equipment Research and Development Center, Fort Belvoir, Virginia 22060

TABLE OF CONTENTS

	Page
SECTION 1 - INTRODUCTION	1-1
SECTION 2 - SUMMARY	2-1
SECTION 3 - CONCLUSIONS AND RECOMMENDATIONS	3-1
SECTION 4 - CLOSED-CONNECT FUELING DEVICE	4-1
4.1 Introduction and Design Requirements	4-1
4.2 Summary of Results	4-2
4.3 Technical Discussion	4-3
4.3.1 Original (Proposed) Design	4-3
4.3.1.1 Fluidic Sensing Technique	4-3
4.3.1.2 Amplifier Venting	4-7
4.3.1.3 Tank Pressure Sensing	4-8
4.3.1.4 Supply Pressure Regulation	4-8
4.3.1.5 Operating Switch	4-9
4.3.2 Fluidic Sensing Circuit Evaluation	4-10
4.3.2.1 Design Considerations	4-10
4.3.2.2 Selection of Alternate Concept	4-11
4.3.2.3 Final Circuit Evaluation	4-13
4.3.3 Operating Switch and Manual Valve	4-19
4.3.3.1 Operating Switch	4-19
4.3.3.2 Manual Valve	4-20
4.3.4 Sizing Analysis	4-21
4.3.4.1 Design Criteria	4-21
4.3.4.2 Main Valve Flow Area	4-21
4.3.4.3 Actuation System Design	4-23
4.3.5 Main Valve Testing	4-25
4.3.5.1 Drag and Hysteresis	4-25
4.3.5.2 Stability and Closed-Valve Leakage	4-27
4.3.6 Breadboard Evaluation	4-30
4.3.7 Prototype Evaluation and Demonstration	4-32
4.3.7.1 Preliminary Tests	4-38
4.3.7.2 Damping Orifice Tests	4-38
4.3.7.3 Close-Clearance Guide Evaluation and Response Tests	4-44
4.3.7.4 Tank Level Variation for Automatic Shutoff	4-47
4.3.7.5 Surge Sensitivity Tests	4-47

		Page
4.3.7.6	Residual Flow After Disconnecting Nozzle During Fueling	4-47
4.3.7.7	Hydrostatic Tests	4-51
4.3.7.8	Nozzle Flow Tests	4-51
4.3.8	Recommended Design Changes	4-53
4.3.8.1	Elimination of "Hydraulic Lock"	4-53
4.3.8.2	Rolling Diaphragm Seal Revision	4-57
4.3.8.3	Increased Piston Force	4-58
SECTION 5 - APPLICABILITY OF FLUIDICS TO CONTROL OF MILITARY FUEL HANDLING OPERATIONS		5-1
5.1	Pipeline Operation Including Pump Station Control and Pressure Regulation	5-1
5.1.1	Introduction and Requirements	5-1
5.1.2	Operational Considerations	5-4
5.1.2.1	Fluidic Control Power Supply	5-4
5.1.2.2	Pipeline Control Mode	5-10
5.1.2.3	Station Fuel Supply Control	5-10
5.1.2.4	Startup and Shutdown Procedures	5-15
5.1.3	Pump Station Startup Sequence Control	5-18
5.1.3.1	Logic Statements	5-18
5.1.3.2	APU Start - Sequence 1	5-19
5.1.3.3	Preparation - Sequence 2	5-22
5.1.3.4	Pre-Start - Sequence 3a	5-24
5.1.3.5	Start - Sequence 3b	5-26
5.1.4	Fluidic On-Line Control	5-29
5.1.4.1	Control Considerations	5-29
5.1.4.2	Suction Pressure Sensor and Speed Reference Generator	5-31
5.1.4.3	Discharge Pressure Sensor and Speed Reference Generator	5-34
5.1.4.4	Select-Lo Circuit	5-35
5.1.4.5	Throttle Control Loop	5-35
5.1.5	Fluidic Amplifiers, Devices, and Sensors	5-36
5.1.5.1	Dispatcher/Pump Station Transceiver	5-36
5.1.5.2	Electrical/Fluidic Interfaces	5-36
5.1.5.3	Pressure Regulation	5-38
5.1.5.4	Pressure Level Detectors	5-39
5.1.5.5	Oil Level Sensor	5-41
5.1.5.6	Engine Start Detection and Speed Sensor	5-42
5.1.5.7	Engine Throttle Actuator	5-43

		Page
5.1.6	Operation of Automatic Line Valves	5-51
5.1.6.1	Hydraulic Actuators	5-51
5.1.6.2	Pilot Stage	5-52
5.1.7	Practicability of Fluidic Control for Pipeline Pump Stations	5-52
5.2	Fuel Storage Facilities	5-54
5.2.1	Introduction and Requirements	5-54
5.2.2	Tank Quantity Gaging	5-56
5.2.3	Automatic Control Switching Manifold	5-56
5.2.4	Conclusions	5-61
5.3	Fuel Dispensing and Decontamination	5-61
5.3.1	Introduction and Requirements	5-61
5.3.2	Portable Dispensing Pump Flow/Speed Controller	5-63
5.3.2.1	Flow Demand Speed Controller	5-63
5.3.2.2	Constant Pressure Speed Controller	5-65
5.3.2.3	Conclusions	5-67
5.3.3	Filter/Separators	5-68
5.3.3.1	Water Dump Control	5-68
5.3.3.2	Degree of Clogging Monitor and Control	5-69
5.3.3.3	Conclusions	5-74
5.4	Interface Detection	5-74
5.4.1	Introduction and Requirements	5-74
5.4.2	Useful Phenomenon for Interface Detection	5-75
5.4.3	Passive Bridge Interface Detector	5-79
5.4.4	Fluidic Jet-On-Jet Interface Detector	5-81
5.4.5	Conclusions	5-83
APPENDIX A -	PRESSURE REGULATORS USING LAMINAR FLOW CONTROL	A-1
APPENDIX B -	FLUIDIC DEVICE FUNDAMENTALS AND GRAPHICAL SYMBOLOGY	B-1
APPENDIX C -	OPERATING PRINCIPLES OF THE BENDIX CLOSED-CONNECT FLUIDICALLY CONTROLLED FUELING DEVICE	C-1

LIST OF ILLUSTRATIONS

Figure No.	Title	Page
4-1	Fluidic Automatic Shutoff Control Schematic	4-4
4-2	Bistable Fluid Amplifier	4-5
4-3	Fluidic Level Sensor	4-7
4-4	Main Fuel Valve With Rolling-Diaphragm Seals	4-9
4-5	Operating Switch	4-10
4-6	Fluidic Shutoff Circuit	4-11
4-7	Alternate Fluidic Circuit	4-12
4-8	Fluidic Level Sensor Flow Consumption	4-14
4-9	Fluidic Level Sensor Characteristics	4-15
4-10	Effect of Fuel Level on Sensor Characteristics	4-16
4-11	Closed-Connect Fluidic Amplifier Test	4-18
4-12	Operating Switch	4-19
4-13	Manual Valve	4-20
4-14	Main Fuel Valve Dimensional Designations	4-22
4-15	Main Valve Design Parametric Tradeoff	4-26
4-16	Hysteresis With Three Rolling Diaphragms	4-28
4-17	Original Valve/Seat Design	4-28
4-18	Revised Valve and Seat	4-29
4-19	Valve Modification	4-29
4-20	Breadboard Control Circuit Test Setup	4-30
4-21	Control Circuit No. 1	4-33
4-22	Control Circuit No. 2	4-34
4-23	Final Control Circuit No. 3	4-35
4-24	Breadboard Control Circuit Performance (Chart Speed = 100 mm/sec)	4-36
4-25	Effect of Surge on Breadboard Control Circuit (Chart Speed = 10 mm/sec)	4-37
4-26	Fluidic Closed-Connect Fueling Nozzle - Rear View	4-39
4-27	Fluidic Closed-Connect Fueling Nozzle - Front View	4-40
4-28	Closed-Connect Fueling Nozzle Receptacle - Front View	4-41
4-29	Closed-Connect Fueling Nozzle Receptacle - Rear View	4-42
4-30	Test Installation of Nozzle and Receptacle	4-43
4-31	Close-Clearance Guide Installation	4-45
4-32	100 gpm Response Data for Automatic Operation of Fluidic Closed-Connect Fueling Nozzle (Chart Speed = 100 mm/sec)	4-46
4-33	25 gpm Response Data for Automatic Operation of Fluidic Closed-Connect Fueling Nozzle (Chart Speed = 100 mm/sec)	4-48
4-34	Response Data for Manual Operation of Closed-Connect Fueling Nozzle (Chart Speed = 100 mm/sec)	4-49
4-35	Surge Data for Closed-Connect Fueling Nozzle (Chart Speed = 10 mm/sec)	4-50

Figure No.	Title	Page
4-36	Flow-Pressure Characteristics for Closed-Connect Refueling Nozzle	4-52
4-37	Calculated Flow Force for Main Valve of Closed-Connect Fueling Nozzle	4-54
4-38	Nozzle Parts	4-55
4-39	Receiver Parts	4-56
4-40	Methods to Relieve Hydraulic Lock	4-57
5-1	Pump Station Control Block Diagram	5-8
5-2	Pump Station Fuel Supply Control	5-9
5-3	Bistable Fluid Amplifier	5-11
5-4	Fluidic Level Sensor	5-12
5-5	Station Fuel Tank Level Control Sensor	5-14
5-6	Military Pumping Station	5-16
5-7	Sequence No. 1 - APU Start	5-20
5-8	Sequence No. 2 - Preparation	5-23
5-9	Sequence No. 3(a) - Pre-Start	5-25
5-10	Sequence No. 3(b) - Start	5-27
5-11	Pump Station Control/Engine Control Interface	5-30
5-12	Throttle Control Schematic	5-32
5-13	On-Line Pressure Control	5-33
5-14	Solenoid Valve E-F Transducer	5-37
5-15	Bendix Miniature Pneumatic to Electrical Transducer	5-38
5-16	Pressure Level Detector Schematic	5-40
5-17	Pressure Level Sensor Logic Circuit	5-40
5-18	"Bubbler Tube" Oil Level Sensing Technique	5-41
5-19	Speed Sensor Schematic	5-43
5-20	Basic Operation and Design of Dynavector Drive	5-44
5-21	Frequency Response - Servovalve Driven Rotary Motors	5-48
5-22	Epicyclic Transmission Arrangement	5-49
5-23	Dynavector Actuator Epicyclic Transmission Arrangement	5-49
5-24	Pipeline Valve Operator Pilot Stage	5-53
5-25	Army Fuel Distribution System	5-55
5-26	Control Switching Manifold	5-58
5-27	Fluidic Diverter Valve Circuit	5-59
5-28	Valve Truth Chart for Manifold	5-60
5-29	Dispensing Pump Flow Demand Speed Controller	5-64
5-30	Constant Pressure Dispensing Pump Speed Control	5-64
5-31	Fluidic Logic for Constant Pressure Dispensing Pump Speed Control	5-66
5-32	Fluidic Water Dump Valve Control	5-70
5-33	Transfer Manifold for Continuous Filter/Separation	5-71
5-34	Filter/Separator Transfer Control	5-73
5-35	Specific Gravity of Typical Hydrocarbon Fuels	5-76
5-36	Viscosities of Typical Hydrocarbon Fuels	5-78
5-37	Fuel Interface Detector Using Bridge Circuit	5-80

Figure No.	Title	Page
5-38	Interface Detector With Zero Flow to Ambient	5-82
5-39	Fluidic Jet-on-Jet Interface Detector	5-82
5-40	Breadboard Fluidic Viscometer Performance	5-84
A-1	Differential Thermal Expansion Compensating Orifice	A-1
A-2	Uncompensated Sensing Circuit Temperature Characteristics	A-2
A-3	Compensated Sensing Circuit Temperature Characteristics	A-2
A-4	Breadboard Sensing Bridge	A-3
A-5	Variation of Regulated Pressure with Sensing Circuit Input Variation	A-5
A-6	Regulation of Regulated Pressure With Load Flow	A-5
A-7	Variation of Regulated Pressure With Reduction in Ambient Pressure	A-5
A-8	Variation of Regulated Pressure With Increase of Ambient Pressure	A-6
B-1	Beam Deflection Effect	B-3
B-2	Impact Modulation Effect	B-3
B-3	Field-Modulated Jet Pattern Effect	B-4
B-4	Controlled Turbulence Effect	B-4
B-5	Jet-to-Surface Interaction Effects	B-6
B-6	Vortex Flow Effects	B-7
B-7	Jet Proportional Amplifier Operation	B-9
B-8	Jet Proportional Amplifiers - Form and Characteristics	B-9
B-9	Staged Jet Proportional Amplifier	B-10
B-10	Jet Bistable Amplifier Operation	B-10
B-11	Jet Bistable Amplifier - Form and Characteristics	B-12
B-12	Staged Jet Bistable Amplifier	B-12
B-13	Vortex Amplifier - Form and Characteristics	B-14
B-14	Staged Vortex Amplifier	B-14
B-15	Vortex Valve Schematic	B-15
B-16	Vortex Valve Characteristic Curves With Regulated Supply	B-16
B-17	Vortex Valve Characteristics With Supply Load	B-16
B-18	Basic Symbols	B-18
B-19	Port Locations	B-18
B-20	Proportional Jet Interaction Amplifier	B-18
B-21	Bistable Digital Devices	B-18
B-22	Monostable Digital Device	B-20
B-23	Alternate Designations	B-20
C-1	Closed-Connect Fueling Nozzle Receptacle	C-2
C-2	Fluidic Closed-Connect Fueling Nozzle	C-5
C-3	Control Circuit Schematic	C-6

LIST OF TABLES

Table No.	Title	Page
5-1	Extreme Temperature Properties of Military Fuels	5-6
5-2	Temperature Approach at Constant Viscosity	5-80

FOREWORD

This report was prepared by the Bendix Research Laboratories, The Bendix Corporation, Southfield, Michigan, and is the final report for Fluidics for Control of Military Fuel Handling Operations. The work was initiated under U.S. Army Contract Number DAAK02-69-C-0123, Project Number 5548584241030, sponsored by the U.S. Army Mobility Equipment Research and Development Center, Fort Belvoir, Virginia. The work was performed under the direction of Mr. N. A. Caspero, Chief, Onshore Fuel Systems Branch, Fuels Handling Equipment Division. Work at Bendix Research Laboratories was under the direction of D. D. Barnard.

The inclusive dates of research were 31 October 1968 through 31 August 1970.

Major contributions were made by Mr. T. A. Phillips of Bendix Research Laboratories and Mr. W. E. Studebaker of the U.S. Army Mobility Equipment Research and Development Center.

SECTION 1

INTRODUCTION

The purpose of this analytical and experimental effort was to evaluate the practicability of fluidics for control of military fuel handling operations. There were two basic objectives. The first was to demonstrate the feasibility of a fluidically controlled, automatic shutoff closed-connect fueling device. The second was to analytically implement fluidic solutions to various military fuel handling operations to allow an appraisal of the practicability of fluidics for control.

The demonstration of the fueling device was achieved by combining a unique method of fluidic sensing and control with a commercially available closed-connect coupling. The effort consisted of the design and fabrication of the component parts, a breadboard evaluation of the critical components and subsystems and, finally, a prototype fabrication, evaluation and demonstration.

The evaluation of fluidics for control of fuel handling operations consisted of: specifying the various operations; defining the control requirements; implementing fluidic solutions and evaluating the practicability of the application.

The operations for which fluidic control were considered included pipeline pump station control, storage tank quantity gaging, tank farm manifold control, fuel interface detection in pipeline flow, fuel dispensing pump flow and speed-control, filter/separator water dump valve control and automatic switching between filter/separator units.

SECTION 2

SUMMARY

This is a report of an investigation into the practicability of using fluidic technology for control in military fuel handling operations.

The purpose of this investigation was to determine if fluidics offered unique solutions to the many potential areas for automatic control in field operations including automatic pipeline control, tank farm manifold control, tank quantity gaging, interface detection in pipelines, fuel dispensing pump flow and speed control, detection of clogging in filter/separators, automatic switching between filter/separator units and automatic shutoff closed-connect fueling devices.

The purpose was achieved by conducting concurrent experimental and analytical programs. First, to demonstrate the potential for fluidic control, a prototype of a fluidically controlled, closed-connect fueling device was designed, tested, demonstrated and delivered to the Army. Second, a comprehensive study was performed that included equipment and system definition, determination of control requirements, conception of fluidic solutions and component and system performance appraisals for each of the fuel handling operations mentioned.

The prototype fueling device consists of a nozzle and a tank receptacle. When mated, fuel is delivered to the tank without exposing the fuel or tank to airborne contaminants. When separated, both fuel flow paths are sealed from the ambient. The nozzle was designed with a fluidically controlled main fuel valve. It is positioned as a function of fuel delivery pressure to assure reliable fluidic amplifier operation, and it is automatically shut by the amplifier sensing circuit. This circuit uses a float-actuated valve located in the fuel tank and affixed to the receptacle to signal the amplifier when the tank fills. The amplifier uses this information to stop fuel flow by closing the main valve and by shutting off its own power supply which is derived from the fuel delivered to the fueling nozzle. It also is provided with a manual control valve that bypasses the fluidic control.

The fueling device successfully met the requirements of delivering fuel of specified specific gravity at a flow rate of 100 gpm with no more than a total pressure drop of 15 psi. The receptacle also met the requirement of being simply field - altered for normal open-port fueling. Other requirements were also met. An exception was the nozzle weight which was about two pounds heavier than specified. However, the receptacle was under the specified weight by essentially the same amount.

To implement the study portion of the work, operational requirements for each of the various control applications were reviewed to determine the control requirements. Automatic pipeline operation was

of special interest and it was decided to study the control of a remotely located pipeline pumping station. This operation was selected because many types of control functions are performed during the automatic start-up, on-line operation and shutdown. The startup and on-line operation were studied in detail and fluidic sequencing and steady-state circuits were devised to meet the requirements for unattended control. The resultant startup and on-line controls included many logic functions and several interface devices such as sensors, pilot stages, transducers, and actuators. A brief tradeoff study of fluidic power supplies for the pump station control included: use of the fluid in the pipeline; pump prime mover driven auxiliary power units (APU); and separate APUs. Pneumatic and hydraulic fluids were considered and the final selection was a separate low pressure pneumatic source for the fluidic logic circuits and another separate high pressure hydraulic source for powering the operators that open and close the various valves in the station fuel manifold.

For the other fuel handling operations, detailed requirements were obtained through discussions with cognizant Army personnel. Following this, effort was devoted to a review of available fluidic control technology to obtain a control solution. In some cases, no solution was apparent. For the operations where fluidics appeared to offer control solutions, a technique was implemented and the feasibility and practicability were evaluated.

In general, it was concluded that fluidics offers practical and feasible control technology for many military fuel handling operations. In several instances, the liquid fuel itself must be used as the amplifier power supply. In others, this approach is desirable but not essential. However, it was concluded that present amplifiers are limited in operational range if the liquid fuel is used. This is because low temperatures (-40°F) can result in Reynolds Numbers within the amplifier that are below the minimum generally considered safe for reliable operation. Pneumatic power can be substituted in many of these controls as an interim approach until amplifier designs are available for operation at lower Reynolds Numbers. Bendix Research Laboratories has been doing corporate funded development of amplifier profiles that are optimized for liquid operation. This effort is expected to result in fluidic control capabilities for liquid operation similar to those already available for pneumatics.

For the specific applications investigated, it was concluded that fluidics are practical and feasible for: pipeline pump station control, storage tank farm manifold control, fuel dispensing pump speed and flow control, automatic switching between filter/separator units, detection of fuel interfaces in pipelines and control of automatic shutoff closed-connect fueling devices. Fluidics did not appear to offer solutions to storage tank fuel quantity gaging or to control of the water dump valve in filter/separator units.

SECTION 3

CONCLUSIONS AND RECOMMENDATIONS

Based upon the demonstration of a fluidically controlled automatic shutoff closed-connect fueling device and the general results of the study portions of this contract, it is concluded that fluidic technology is practical for use in several control applications for military fuel handling operations. Further development work is required before fluidics can be effectively used for all military fuel handling control applications. This will be necessary primarily because wide variations in viscosity take place for typical military fuels as temperatures range between -40°F and +120°F. Many control applications preferably would use the fuel for the fluidic amplifier power supply. However, low fuel temperatures and the resultant high viscosity can cause the Reynolds number to decrease below the minimum required for reliable operation. Therefore, it is a conclusion of this work that, where fuel must be used as the power source, specially designed fluidic amplifiers will be required. Bendix Research Laboratories has been performing a Corporate funded investigation of liquid powered fluidic amplifiers. The principal purpose of the investigation is to determine the optimum amplifier configurations for liquid operation. As a result, it can be expected that the present minimum Reynolds number will be reduced and provide for more widespread application of fluidics in liquid powered applications. In the interim, many of the Army fuel handling applications would still be feasible to implement as long as operation was limited to a practical minimum low temperature that would be specifically defined for each type of fuel.

For the control of a pipeline pump station and other similar controls, comprised mostly of logical functions, pneumatically powered fluidic circuits are concluded to be entirely feasible and practical.

For the other specific control applications investigated during this study, the following conclusions were reached: Fluidic technology does not appear to be applicable to the determination of fuel quantity in storage tanks. Fluidics can be practically applied to the logical control of an automated storage tank farm switching manifold provided that pneumatic power is used for the logic circuits. Control of fuel dispensing pumps to provide automatic speed or pressure control is feasible within the previously mentioned Reynolds number limitations. Fluidic control of the water dump valve in a filter/separator is not practical because of power supply limitations related to contamination control and Reynolds Number. Fluidic control to provide automatic switching of the main flow stream from a clogged filter/separator to a standby unit is practical if a separate (preferably pneumatic) power supply is used. Also, because of the proximity of the water dump control, it would become feasible to use fluidic control of this function if pneumatic power were available for the above

switching function. Fluidic phenomena and fluidic control capability are concluded to offer practical and proven solutions to detection of the fuel interfaces in pipelines and can provide the necessary control functions for effecting flying switches in downstream manifolds.

Based upon the results of the fueling device development and the conclusions drawn from the study of the applicability of fluidics for control of military fuel handling operations, several recommendations can be made.

It is recommended that at least a portion of the control requirements of an automated pipeline pump station be implemented with fluidics to allow a realistic evaluation of the potential of this relatively new technology for performing this function. For example, the start-up sequencer discussed in this study could be reviewed to optimize the design and then be implemented. This would provide a broad evaluation of the logic capabilities of fluidic technology using pneumatic power.

It is also recommended that fluidics be further investigated for its practicability as a controller for fuel dispensing pumps. Two techniques were presented and briefly evaluated in this study. A more comprehensive program is recommended to experimentally evaluate the critical components of each, make a tradeoff comparison and, finally, fabricate, evaluate and demonstrate the selected control.

A similar program is recommended to evaluate the two concepts for pipeline fuel interface detection that were presented in this study. Both of these concepts, the passive bridge interface detector and the fluidic jet-on-jet interface detector have already received some experimental evaluation at the Bendix Research Laboratories for other applications. Therefore, an experimental program for evaluation of these devices as interface detectors would lead to selection of one as the most promising. Following a selection, further analytical and experimental work is recommended to refine the design and to demonstrate the detector in actual service.

Finally, a continuation of the development of a fluidically controlled closed-connect automatic shutoff fueling device is recommended. Although the prototype demonstrated satisfactory operability, there is a need to improve several aspects of the design: namely, the main fuel valve should be redesigned to reduce its size, improve the stability and decrease the closing response time. Other aspects of the design should be further studied to determine ways to reduce the probable manufacturing costs. Improved piston seals and a simplified amplifier manifolding arrangement are examples of this.

SECTION 4

CLOSED-CONNECT FUELING DEVICE

4.1 INTRODUCTION AND DESIGN REQUIREMENTS

The primary program objective was the design, fabrication, test and delivery of a prototype model of a closed-connect fueling device equipped with and operated by a fluidic automatic shutoff control system.

The term, closed circuit, defines a technique for fueling a vehicle without exposing the interior of the fuel tank or the fueling nozzle to contamination from the environment either before, during or after a fueling operation. The fueling device consists of the nozzle and a permanently mounted receiver in the fuel tank.

This method of fueling is not unique. It has been used for fixed wing aircraft underwing refueling for years. However, it is unique to fueling operations related to ground vehicles and to helicopters. The Army has been investigating this type of fueling technique for about three years because of the special refueling requirements of gas turbine powered helicopters under combat conditions.

Closed-connect fueling reduces the vulnerability of military vehicles and operators to enemy action during fueling operations; the maximum advantage of this fueling technique occurs for high flow rates by virtue of simple valving, rapid connect/disconnect, and reliable automatic flow shutoff control.

In many cases, when using this fueling technique, the operator is not in a position to observe the fuel level as it rises in the tank. Therefore, it is necessary to provide a sensing technique that automatically shuts off fuel flow when the tank becomes full. An advantage realized from automatic shutoff is that one operator can simultaneously fuel several vehicles because, once connected and actuated, the device can be left unattended. The methods by which the fuel tank fullness is sensed and the fuel flow controlled can have many variations. Because of the advantages offered by fluidics technology, the Army initiated this program to demonstrate the feasibility of a closed-connect fueling device equipped with and operated by a fluidic automatic shut-off control system.

As mentioned above, the device was to consist of two directly connectable components, a nozzle and a receiving valve. When the two components are disconnected, the fluid flow from both must shut off automatically and the connection design has to restrict fuel contamination to a minimum.

Additional requirements also had to be met. These were:

- The design of the receiver had to be capable of being used in a retrofit of large capacity fuel tanks.

- The receiver had to be capable of being quickly and simply field-altered to permit use of a standard gravity refueling nozzle.
- The pressure drop across the connected nozzle and receiver was not to exceed 15 psi when flowing liquid hydrocarbon fuel of 0.725 specific gravity at a flow rate of 100 gpm.
- The fluidic control system was required to sense the level of fuel in the fuel tank and/or the internal pressure in the tank and provide automatic shut-off of flow on that basis.
- The control design had to draw its power from the hydraulic power in the fuel and it could not be sensitive to pressure surges in the fueling line.
- The nozzle design had to include a provision for manual control of the flow.
- It was desired that the nozzle not weigh more than 6 pounds and the receiver not more than 5-1/4 pounds.
- The design was to reflect ease of maintenance in the field.

4.2 SUMMARY OF RESULTS

A prototype closed-connect fueling device was designed, fabricated, tested, and delivered. The device consisted of a Fluidic Closed-Connect Fueling Nozzle (Bendix P/N D2172405) and a Closed-Connect Fueling Receptacle (Bendix P/N D2173968). The valving and the fluidic control design and circuitry were established by Bendix Research Laboratories during the program. The connection used a modified Wiggins Company model which provides for rapid connections and disconnections. The connection was modified to allow for simultaneous passage of three separate flows; the main fuel flow, the fluidic amplifier sensing circuit flow, and the amplifier vent flow. Concentric flow paths were used to allow connection of the nozzle to the receptacle without any need for indexing.

The receiver is capable of retrofit to large capacity fuel tanks and is designed for top-filled tanks. It uses the Wiggins concept for easy conversion of the closed-connect configuration to a gravity fueling mode.

All of the design goals were achieved with the exception of the nozzle weight which was 2 pounds and 4 ounces higher than the 6 pound desired weight. The receptacle weight, however, was only 3 pounds and 1 ounce which is 2 pounds and 3 ounces less than the desired weight.

The fueling device is capable of flowing 100 gpm of fuel with a specific gravity of 0.725, with a total pressure drop of 15 psi through the connected assemblies. Complete automatic shutoff of the 100 gpm nozzle flow occurs in 3.5 seconds. The nozzle is insensitive to the increasing or decreasing supply pressure surges which might occur in a

multi-nozzle fueling system. Manual operation of the nozzle is accomplished with a separate spool-type valve which bypasses the fluidic circuit and allows direct control of the nozzle with supply pressure. The nozzle may be disconnected from the receptacle during fueling with a spillage of only 25 cc. This residual flow comes from the fluidic amplifier vent circuit which is not deactivated until shortly after the nozzle is separated from the receptacle. The results of the design and testing program are detailed in the following subsections.

4.3 TECHNICAL DISCUSSION

4.3.1 Original (Proposed) Design

The objective was to demonstrate the practicability of a fluidic automatic control system. Therefore, it was decided to purchase a commercially available fueling device and modify the dry break connection rather than expend engineering effort to conceive of and design a connector. The fueling device selected for modification was a Wiggins Company Model ZZ1 nozzle and a modified Model ZNC1 receiver. This fueling device was selected because it has a hydromechanical automatic shutoff capability, the receiver can be simply altered for gravity type fueling, the connection provides minimum potential for fuel contamination and the pressure drop through the connector at 100 gpm was low enough to allow for additional drop through the main valve and still meet the 15 psi limit established in the design requirements.

A further requirement was defined to protect the vehicle fuel tank. The control design had to prevent fueling in the automatic mode if the fluidic amplifier supply pressure dropped below the level at which reliable automatic shutoff operation could be assured. The amplifier supply is obtained from the fuel delivered to the nozzle by the dispensing pump. Since several nozzles are supplied from a single pump, it is conceivable under some conditions that the pressure delivered to a nozzle could fall to values on the order of 2 to 3 psig. This was considered to be a marginal supply pressure for reliable automatic shutoff operation. Therefore, the fluidic control was required to provide a form of regulation of its own supply pressure to inhibit fueling in the automatic mode at or below marginal pressures.

To allow for fueling under these conditions, or in the event of a malfunction of the automatic control, provision for manual operation was also required.

4.3.1.1 Fluidic Sensing Technique

The fluidic automatic control proposed is shown schematically in Figure 4-1. The technique used to sense tank fullness is based upon a unique operating phenomena peculiar to fluidic amplifiers that operate on liquids. The operation of this sensing circuit is explained below. Before describing the fluidic liquid level circuit, a brief discussion of fluidic amplifiers is desirable to aid in understanding.

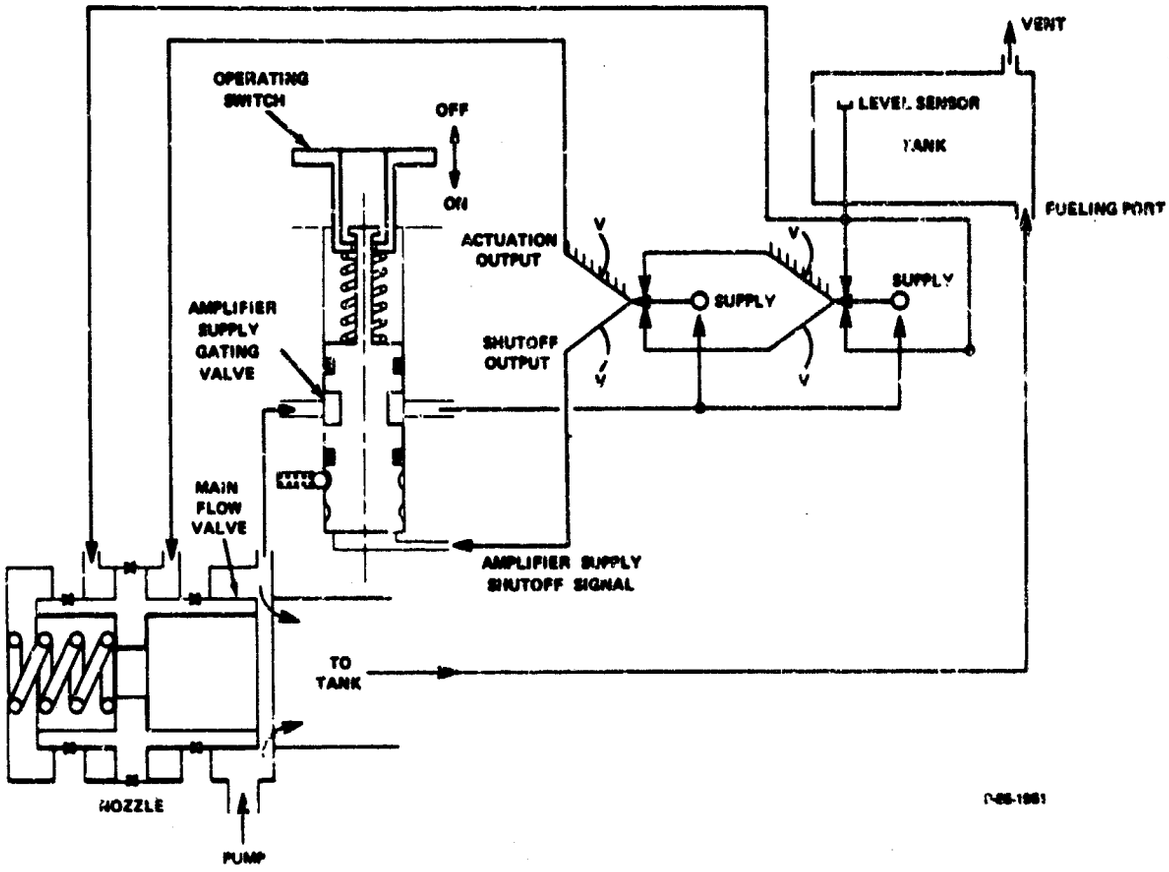

Figure 4-1 - Fluidic Automatic Shutoff Control Schematic

Fluidic amplifiers can be broadly divided into two groups. The first group operates on the vortex phenomenon and the second group depends upon deflection of a power supply jet into one or more output ports. The amplifiers of interest for this application are in the second category and, in addition, belong to that class of jet deflection amplifiers which utilize the Coanda or wall-attachment phenomenon. This is the type of fluidic device usually implied when referred to as a bistable or monostable amplifier, or flip-flop.

Bistable Amplifiers

The bistable amplifier is a fluidic relay which can be operated in either of two stable states or output conditions. A control signal switches the device from one stable state to the other (i.e., from one output port to the other). Because the output signal is greater than the control signal, the device is an amplifier. The operation depends upon the interactions of a fluid jet and a solid stationary

wall. During the first instant of operation, the supply jet is centered between the right and left boundary walls. Fluid at rest near the walls is entrained by the jet and carried downstream. This induces a secondary flow along both sides of the boundary walls.

A random flow disturbance or geometric asymmetry causes the flow to favor one side over the other. The volume between the jet and the wall of the favored side decreases. This movement of the jet closer to the wall increases the amount of flow entrainment. The resultant pressure reduction in the area adjacent to the favored wall forces the jet to the wall where it then becomes attached. Figure 4-2 shows the jet attached to the right boundary wall. Also shown are the vents which are used to isolate the amplifier from the effects of load impedances into which the outputs may be directed.

The bistable amplifier output signal can be switched from one side to the opposite by introducing a control flow into the port on the same side of the amplifier from which the output flow is then issuing. The control flow acts to first reduce and then reverse the sense of the pressure differential which has caused the power jet to be attached to the boundary wall. The pressure differential reversal is sufficient to start the power jet to switch toward the opposite side. As the jet moves toward the opposite wall, it bootstraps the action by entraining fluid near that wall. Thus the action described earlier is repeated for the opposite wall, it bootstraps the action by entraining fluid near that wall. Thus the action described earlier is repeated for the opposite wall. Once the jet becomes attached, no further control is required. It is for this reason that the amplifier is termed bistable, since the jet, once it has been switched into an output leg, remains there without the need for a control force and will not switch to the other leg until a control flow is applied in the opposite direction.

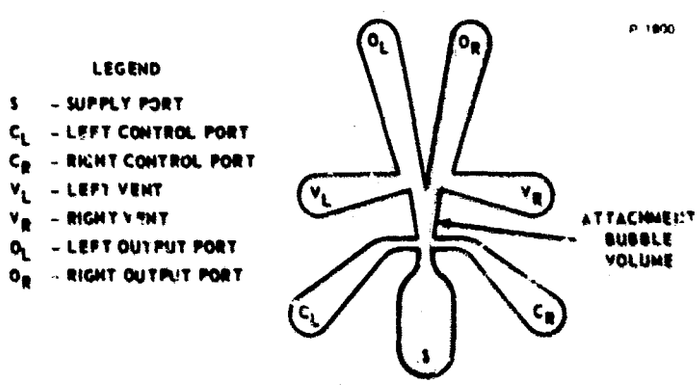

Figure 4-2 - Bistable Fluid Amplifier

Monostable Amplifiers

The wall attachment characteristic can be altered to the point where the power jet will no longer remain attached to the wall when the control signal which switched it there is removed. This is usually done by building in some geometric asymmetry, and the result is an amplifier which has only one "memory" or stable side - hence the name, monostable. The jet always remains on the stable side until a control signal is applied to force or attract it to the other side. As soon as the control signal is removed, the jet snaps back to the stable side.

The monostable amplifier is basically a bistable amplifier that has been converted by reducing the length of the attachment wall on the side opposite the memory side. This is done by increasing the width of the former control port and that port is now referred to as a bias port.

During operation, whether or not the amplifier has been switched, a certain amount of fluid is entrained through the control or bias port on the side opposite the wall to which the jet is then attached. As long as the entrained fluid is replaced, by allowing fluid to enter through the port, operation is normal and unaffected. However, as soon as flow into that port is restricted, the pressure differential across the attached jet is reduced. If the restriction is high enough, the amplifier will switch back to that side.

Thus, it is important to remember that a wall-attachment amplifier can be switched either by introducing a control flow on the "attached" side or by restricting control or bias flow on the "unattached" side.

Figure 4-3 shows a fluidic circuit for sensing fuel level in a tank. The hash marks along one of the output legs of each amplifier indicate that the amplifier has "memory" in that output. That is, it is monostable and will always produce an output from the memory leg in the absence of any control signal.

The first amplifier of the sensor can be physically located in the fuel tank so that the control port is positioned at the desired fuel level. Alternately, the amplifier can be remotely located and a line can be connected to the control port with the other end positioned at the desired fuel level.

If the two amplifiers are supplied with fuel and the control port of the first amplifier is allowed to aspirate air, the memory phenomenon of the first amplifier is destroyed and its supply flow will split approximately between the two output legs rather than flowing only from the memory leg. By connecting both outputs of the first amplifier to the control and bias ports of the second amplifier, this amplifier behaves as though it were immersed in fuel; that is, it operates normally and all of its output is from its memory leg.

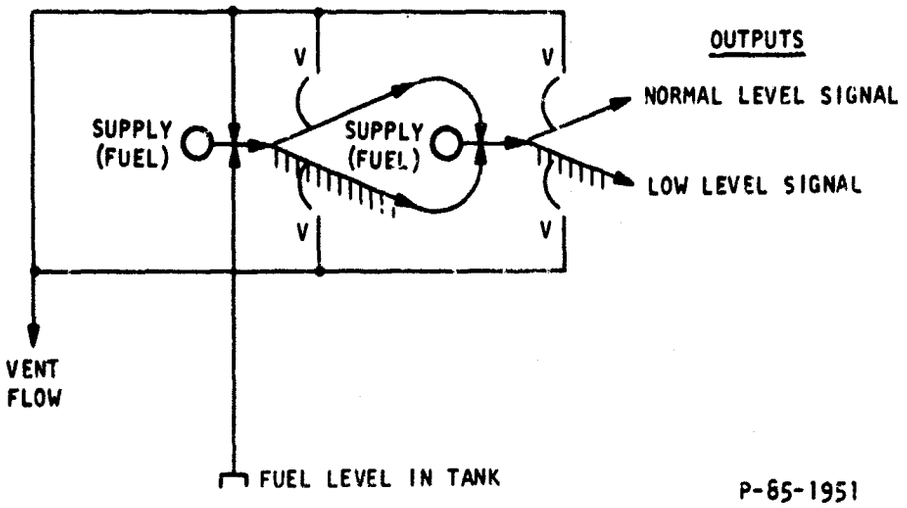

Figure 4-3 - Fluidic Level Sensor

When the control port of the first amplifier is immersed in fuel, this amplifier behaves normally with its entire output from its memory leg. This produces a strong control signal on the second amplifier with a simultaneous loss of the partial bias signal. The result is that the second amplifier switches.

Thus, a digital signal is provided which indicates that the fuel level is either above the desired level or below it.

Referring again to Figure 4-1, it will be noted that the control and bias ports of the sensing amplifier are manifolded together and then referenced to the desired fuel level in the tank. When the level is low, air is aspirated into this line and the actuation output is active. The main flow valve opens and fueling is initiated. When the desired level is reached, fuel is aspirated into the sensing line and the shutoff output becomes active. This results in two actions. First, the main flow valve is driven closed by the spring when the actuation output reduces. Second, the amplifier supply gating valve is driven closed by the action of the shutoff output pressure acting on the lower piston of the valve. This deactivates the fluidic circuit, stopping all flow.

4.3.1.2 Amplifier Venting

The fluidic amplifiers operate by diverting the flow issuing from the power jet. The power jet flow is continuous as long as the amplifiers are supplied, and as a result, any unused output flow must be vented to a local reference sump. In Figure 4-1, the outputs

from the actuation amplifier are directed into essentially infinite impedance loads, i.e., the power piston cavity and the shutoff piston cavity at the bottom of the amplifier supply gating valve. Thus, once the transient phase is completed, all of the power jet flow from this amplifier must pass through the vents to a lower reference pressure. Similarly, the outputs from the sensing amplifier are directed into relatively high impedance loads (the bias and control ports of the actuation amplifier), and a portion of the power jet flow from this amplifier must also pass through its vents to a lower reference pressure. The vent connections are not shown explicitly in Figure 4-1 because, at the time the design was conceived, it was not known if the vent flow could be referenced to the nozzle main flow channel or if it had to be directed into the fuel tank.

4.3.1.3 Tank Pressure Sensing

In many vehicles, tank vents are large enough to handle the highest fueling rates without exceeding safe internal pressures. However, it is conceivable that the tank pressure on some vehicles could rise to dangerous levels during the fueling operation before the tank fills if high flow rates were used and/or the tank vent was restricted or too small. With the fluidic control concept shown in Figure 4-1, if the tank pressure should rise to a value which threatens to burst the tank, the pressure will be transmitted via the amplifier shutoff output to the piston on the bottom of the amplifier supply gating valve. This will shut off the amplifier supply flow, and the main fuel valve will close.

4.3.1.4 Supply Pressure Regulation

As was mentioned earlier, from the consideration of system operational characteristics, it is conceivable that the pressure available at the nozzle/hose interface may vary outside of the normal operating pressure range of the amplifiers. This would result in an inoperative shutoff control during some portions of the fueling operation. To maintain the shutoff capability, control of the pressure at the nozzle inlet is required because it is this pressure which supplies the amplifiers. The control must regulate the main valve metering area to maintain this pressure within the operating limits of the amplifiers and stop the fueling operation completely if the pressure goes outside of these operating limits. This is accomplished with this design approach as follows.

The actuation amplifier output pressure, applied to the power piston on the main fuel valve, generates a force to open the valve against the spring load. The output pressure of the amplifier is directly proportional to the amplifier supply pressure and is theoretically identical to the nozzle supply pressure. Thus, the opening force is proportional to the nozzle supply pressure. Motion of the valve results in a change in the spring loading. Motion in the open direction increases spring load. Therefore, as the nozzle supply pressure rises, the valve

will move further open until the increased spring load balances the increased pressure force from the actuation amplifier. Similarly, if the nozzle supply pressure decreases, the valve will move in the closed direction until the lower spring force balances the lower amplifier output pressure.

When a valve is required to operate at positions proportional to the positioning forces, any friction causes inaccuracies in the desired position. In this case, this would result in operating pressures outside of desired limits. Thus, the seals selected for the main valve were a type of rolling diaphragm. They were selected to minimize friction and dirt sensitivity and because of their demonstrated long life. The basic configuration of the design using rolling diaphragm seals is shown in Figure 4-4.

4.3.1.5 Operating Switch

In the original design shown in Figure 4-1, the operator starts fueling by depressing the operating switch. Note that this switch depresses the amplifier supply gating valve indirectly by compressing a spring. If the fuel level is already at the desired maximum value, the actuation amplifier shutoff output will become active and will prevent the gating valve downward motion, even though the operator holds the switch down. Conversely, the operator may manually shut off fuel flow at any time by pulling upward on the switch. This motion engages the mechanical latch and moves the gating valve upward.

This switch concept was discarded during the design phase of the program and replaced with a more reliable and simple design. The basic operation remained about the same.

The revised switch design is shown in Figure 4-5. It uses a "snap through" Belleville spring as a pressure sensitive diaphragm and to positively position the valve in either the open or closed

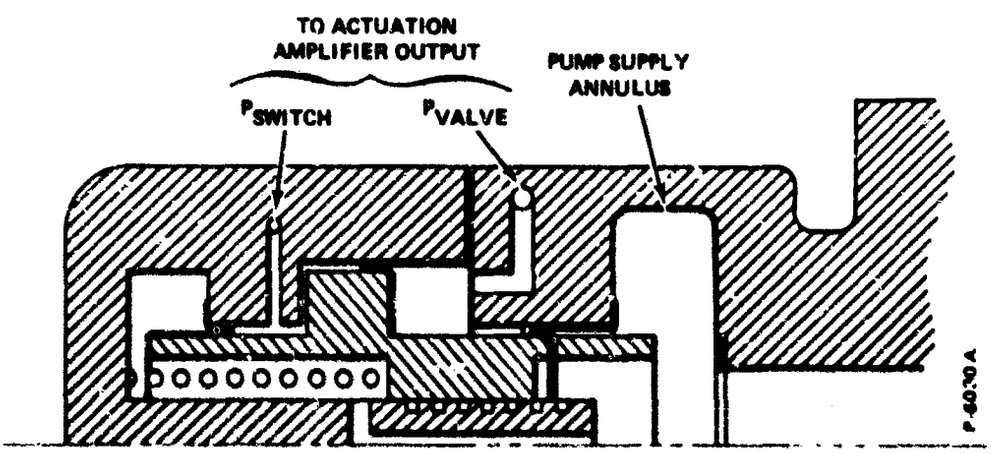

Figure 4-4 - Main Fuel Valve With Rolling-Diaphragm Seals

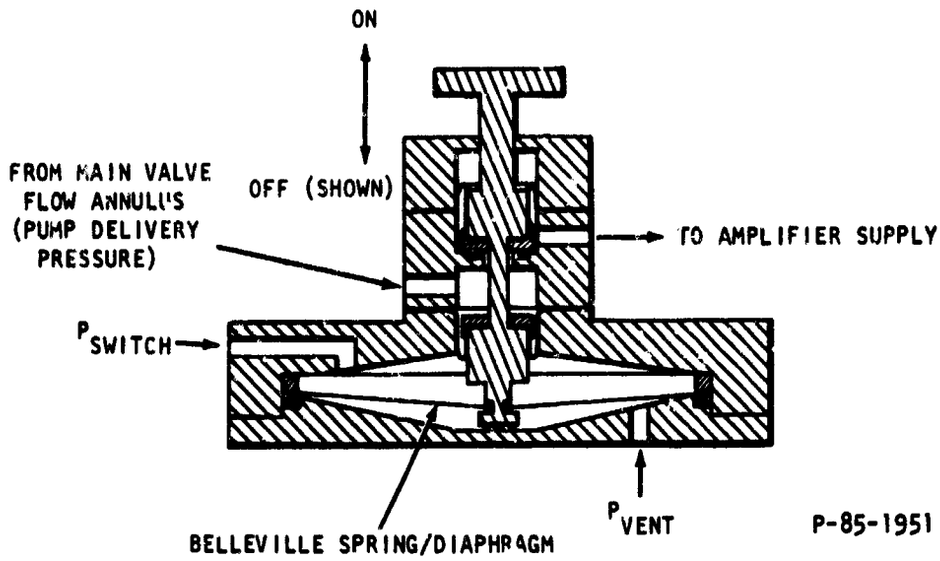

Figure 4-5 - Operating Switch

position. To be more compatible with usual switching techniques, the revised switch opens by pulling upward on the button and closes by pressing downward. The operating switch is explained in more detail in Paragraph 4.3.3.1.

4.3.2 Fluidic Sensing Circuit Evaluation

4.3.2.1 Design Considerations

In order to experimentally evaluate the fluidic sensing circuit, it was necessary to consider what effects would be exerted by the various fuel tank configurations and by the back pressure developed in the closed-connect coupling.

First it was assumed that the length of the sensing line might be as much as six feet. This could occur for a bottom-filled tank of large capacity. Second, it was assumed that the pressure drop caused by the main flow through the closed-connect coupling would be too great to allow venting the amplifiers to the nozzle flow cavity. This meant that the vent flow would have to be collected and carried into the tank through a separate line.

Another effect of fueling a tank through a bottom-located port is that the amplifier vent pressure rises according to the height of fuel in the tank. Therefore, the fluidic sensing circuit was tested to evaluate its response to the fuel level and its compatibility with the various back pressure effects.

4.3.2.2 Selection of Alternate Concept

Referring to the schematic in Figure 4-6(a), which is the original circuit, the bias port of the sensing amplifier is shown connected to the sensing line which, in turn, is connected to the control port of the sensing amplifier. In the preliminary tests of this circuit, it became apparent that the response of the circuit was much too slow if switching was achieved by aspiration of fuel through the sensing line when the level in the tank reached the open end of the sensing line. After further testing, it was determined that good response could be achieved if the rising fuel was allowed to cause a float to shut off the open end of the sensing line. In order for this to work,

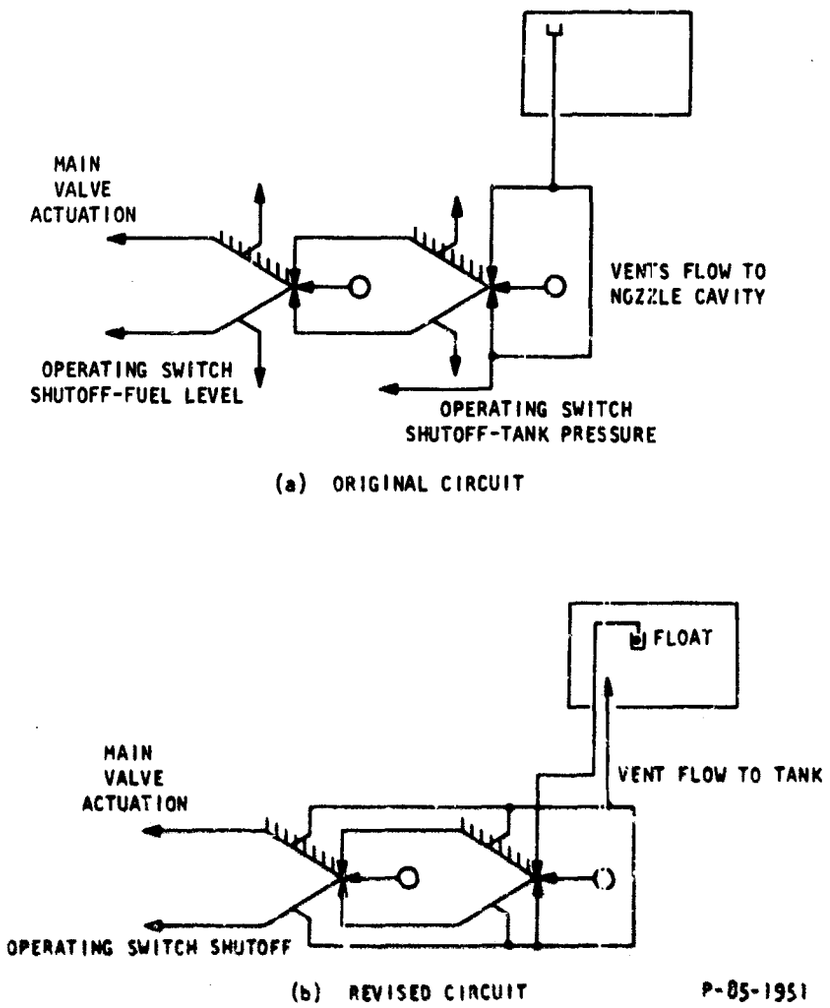

Figure 4-6 - Fluidic Shutoff Circuit

however, the bias port could not be referenced to the sensing line because the effect of closing the end of the line would be felt by both the control and bias ports and the amplifier would go unstable.

Tests of the circuit were then run with the bias port connected [as shown in Figure 4-6(b)] to the same manifold to which both amplifier vents were connected. These tests indicated that the circuit did not function if the slightest back pressure existed on the vent/bias manifold. In the fueling device, since it is necessary to route the vent flow through the closed-connect coupling and into the fuel tank, the amplifier circuit must be capable of operating into some back pressure. As an example of the sensitivity of the bias port to back pressure, a test was run with the bias port referenced to local ambient pressure and submerged in fuel, while the vent flow was back-pressured to 1 psig at an amplifier supply pressure of 35 psig. Operation was satisfactory down to a supply pressure of 8 psig. However, when the bias port was connected to the vent manifold with the same back pressure conditions, the circuit was unstable at all supply pressures.

The original circuit was then replaced with an alternate concept which is shown in Figure 4-7. In this concept, the amplifier is operated as though it were always submerged in fuel and it, therefore, operates normally as a monostable amplifier. This is accomplished by connecting the bias port to the amplifier vent manifold and bleeding fuel into the sensing line from the amplifier supply. By proper selection of orifices A_1 and A_2, the output will always be from the attached leg if orifice A_2 is unrestricted. Placing orifice A_2 in the fuel tank at the desired fuel level, and allowing the fuel to cause a float to close the orifice, increases the sensing line pressure and switches the amplifier.

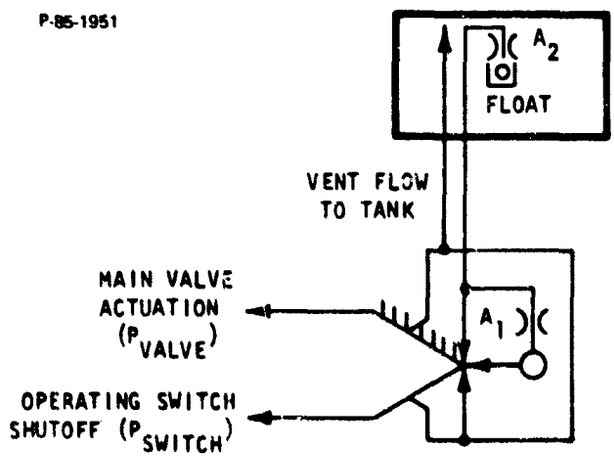

Figure 4-7 - Alternate Fluidic Circuit

One basic difference is that the float must develop enough force to close the orifice sufficiently to raise the sensing line pressure to that required to switch the amplifier. In the original concept, closing the end of the sensing line actually developed a partial vacuum in the sensing line. Therefore, orifice A_2 size was optimized for use with a 0.020-inch by 0.040-inch amplifier (supply nozzle) to minimize the closing force, while allowing orifice A_1 to remain large enough to minimize dirt sensitivity. Tests demonstrated excellent operation of this concept with the following orifice diameters.

A_1 orifice diameter = 0.026 inch

A_2 orifice diameter = 0.050 inch

The selection of a 0.020-inch by 0.040-inch power nozzle for the fluidic amplifier was based on achieving minimal sensitivity to fuel contamination, while keeping vent flow rates low.

4.3.2.3 Final Circuit Evaluation

A series of tests was performed to determine the operating characteristics and flow requirements of the alternate sensing circuit. Figure 4-8 shows the fluidic circuit flow characteristics. These data were obtained by using Bourdon tube pressure gages and timing the flow into a graduate. As indicated on the figure, the amplifier is a 20 MF-1D (Bendix Research Laboratories designation) with an aspect ratio of 2 (power nozzle: 0.020 inch x 0.040 inch.) The test fluid temperature was 75°F.

The general performance characteristics of the circuit are shown in Figures 4-9 and 4-10. The purpose for recording the various pressure differentials is that these are the motive forces used to position the main valve and the operating switch. These pressures were evaluated to aid in sizing the various nozzle components.

P_{valve} designates the amplifier output pressure used to open the main flow valve. P_{switch} designates the amplifier output pressure used to close the operating switch. During portions of the program, P_{switch} and P_{vent} were used alternately on the back side of the main valve piston.

As implied by the data of Figures 4-9 and 4-10, the circuit functions reliably at supply pressures as low as 1 psig when no back pressure exists. Again, the minimum operating pressure increases essentially on a one-to-one basis in the presence of back pressure on the amplifier. The maximum amplifier supply pressure available on the flow bench was 35 psig. Satisfactory operation occurred up to this pressure and system tests later indicated that the operating range extended

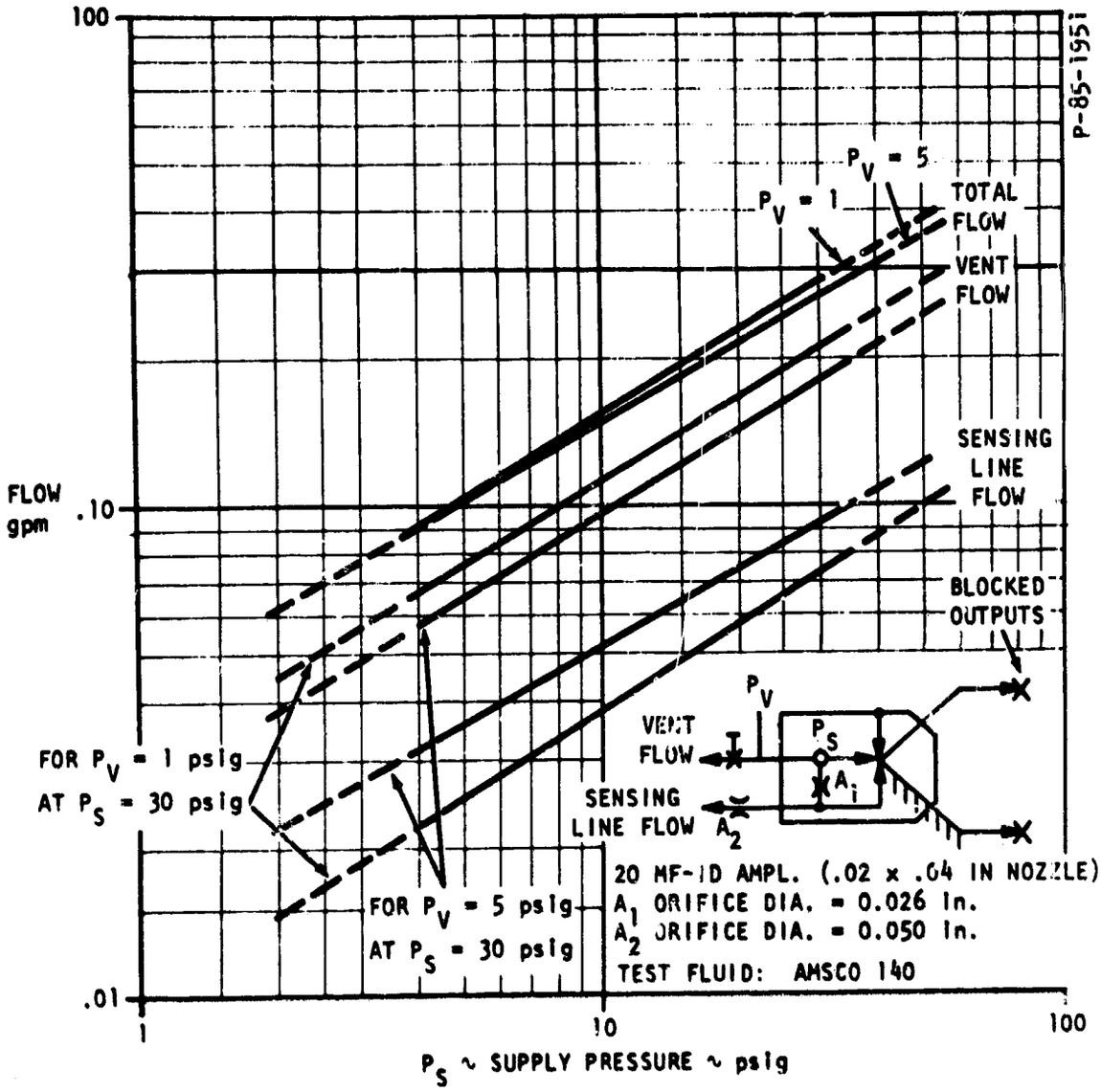

Figure 4-8 - Fluidic Level Sensor Flow Consumption

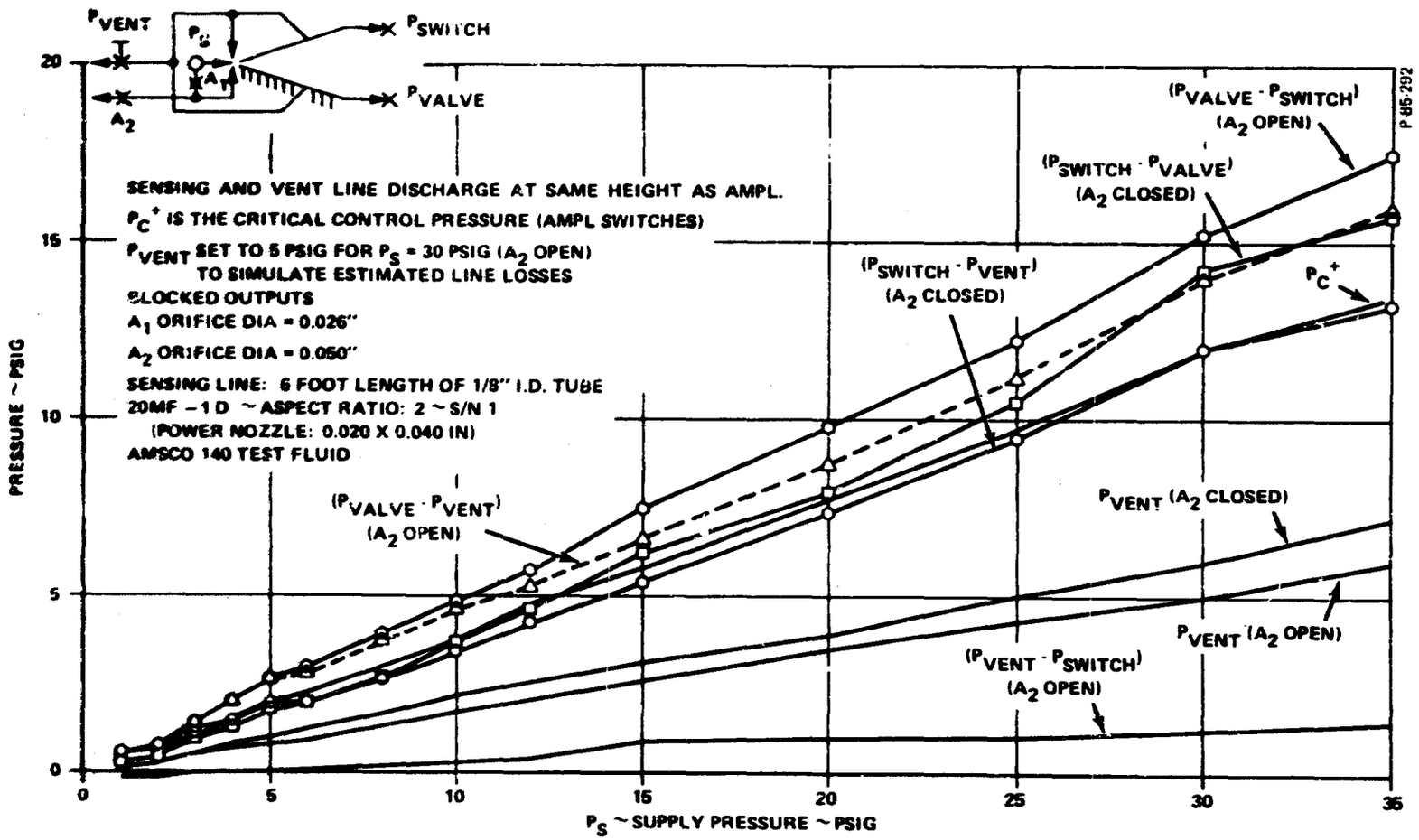

Figure 4-9 - Fluidic Level Sensor Characteristics

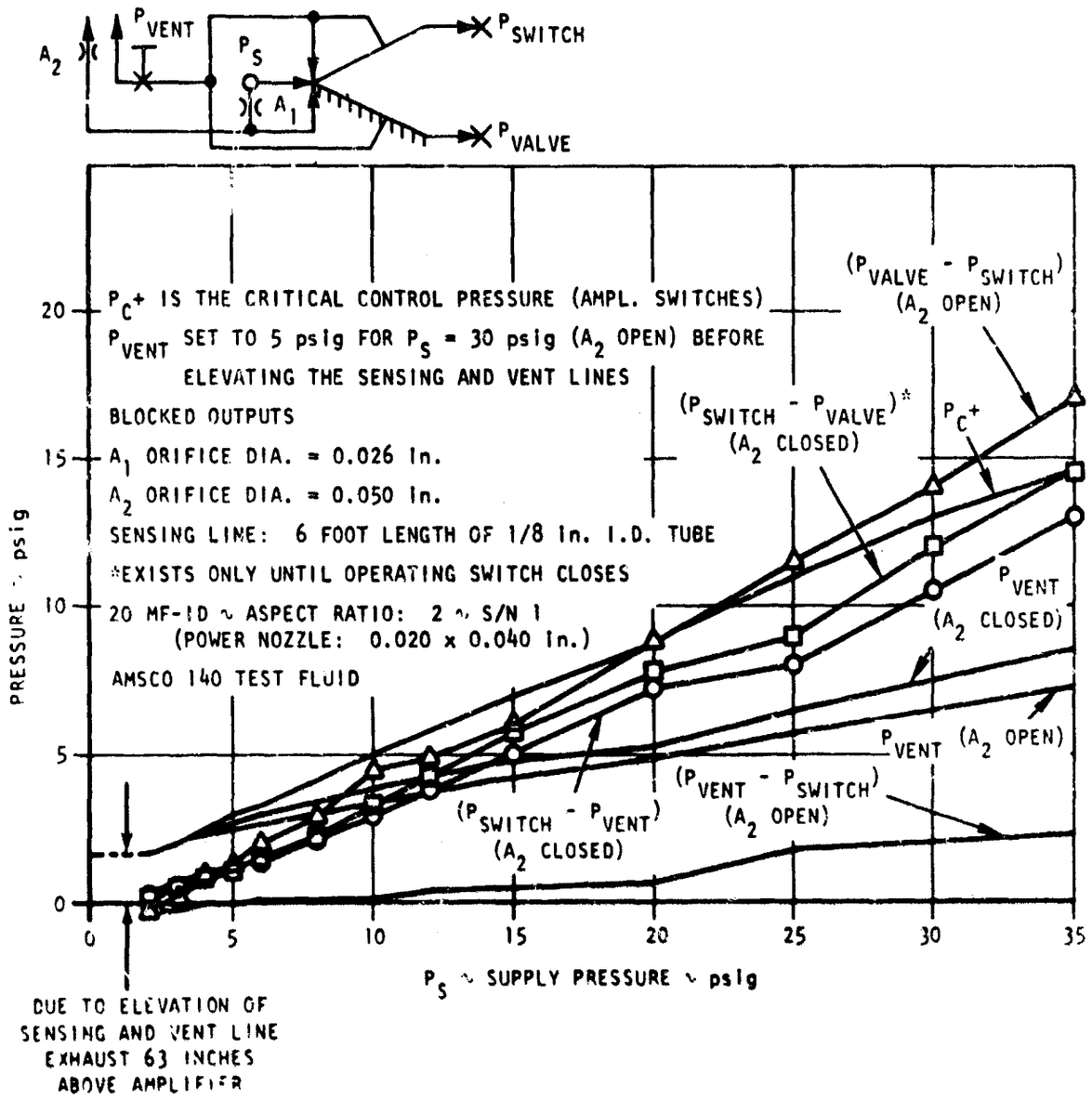

Figure 4-10 - Effect of Fuel Level on Sensor Characteristics

to at least 50 psig. All data were obtained with minimal line volumes on the amplifier outputs and with blocked loads. Figure 4-11 is a photo of the amplifier test.

Because of the small size of the fuel sump on the test stand, the pumped test fluid often contained air bubbles caused by the impingement of the return flow on the residual fluid in the sump. This had no noticeable effect on operation of the circuit, and indicated a good degree of insensitivity to frothing which could occur in a high flow rate device. It should be noted that air entrainment was not present during the flow measurement test.

The data presented in Figures 4-8, 4-9, and 4-10, are explained in the legends of the figures. Some explanation is felt to be needed regarding the length and size of the sensing line and the orifices A_1 and A_2. The use of a six foot long 1/8 inch I.D. sensing line was based upon the probability that the fuel tanks for which the fueling device is intended will be large, and that in many cases the filling port will be at the tank bottom.

The sensing circuit has three fixed resistors, A_1, A_2, and the control port area, A_c. In addition, there is a distributed resistance, A_ℓ, which is due to the line losses. A change in any of these resistances can affect the condition of the amplifier. Also, a change in the back pressure downstream of orifice A_2 can affect the condition of the amplifier. In fact, restricting the outlet of orifice A_2 is the means by which the amplifier detects the rising fuel level and is switched to stop the fueling operation.

Because of the sensitivity to back pressure on orifice A_2, the amplifier vent pressure must be referenced to the same pressure which exists at the exit of orifice A_2. For a top filled tank, all that is necessary is to route the amplifier vent flow into the tank. The end of the sensing line would be located near the tank top so that both lines would be at the same elevation and exposed to the same pressure, if any existed.

For bottom filled tanks, the vent discharge must be located at the same elevation as the end of the sensing line. This is necessary because the sensing line is always filled with fuel and the head developed by raising the end of the line above the amplifier acts like a control pressure on the amplifier. This would cause switching at the lower supply pressures unless the amplifier vents (and the bias port) were also subjected to a similar pressure. This can be done simply by locating the end of the vent line, which is also always filled with fuel, at the same height as the end of the sensing line.

In order that one fueling nozzle (and amplifier) work equally well for top and bottom filled tanks of varying sizes, the combined effective resistance of the sensing line should remain the same for all installations. Orifices A_c and A_1 are, of necessity, in the nozzle and remain fixed for a given design. The resistances, A_ℓ and A_2

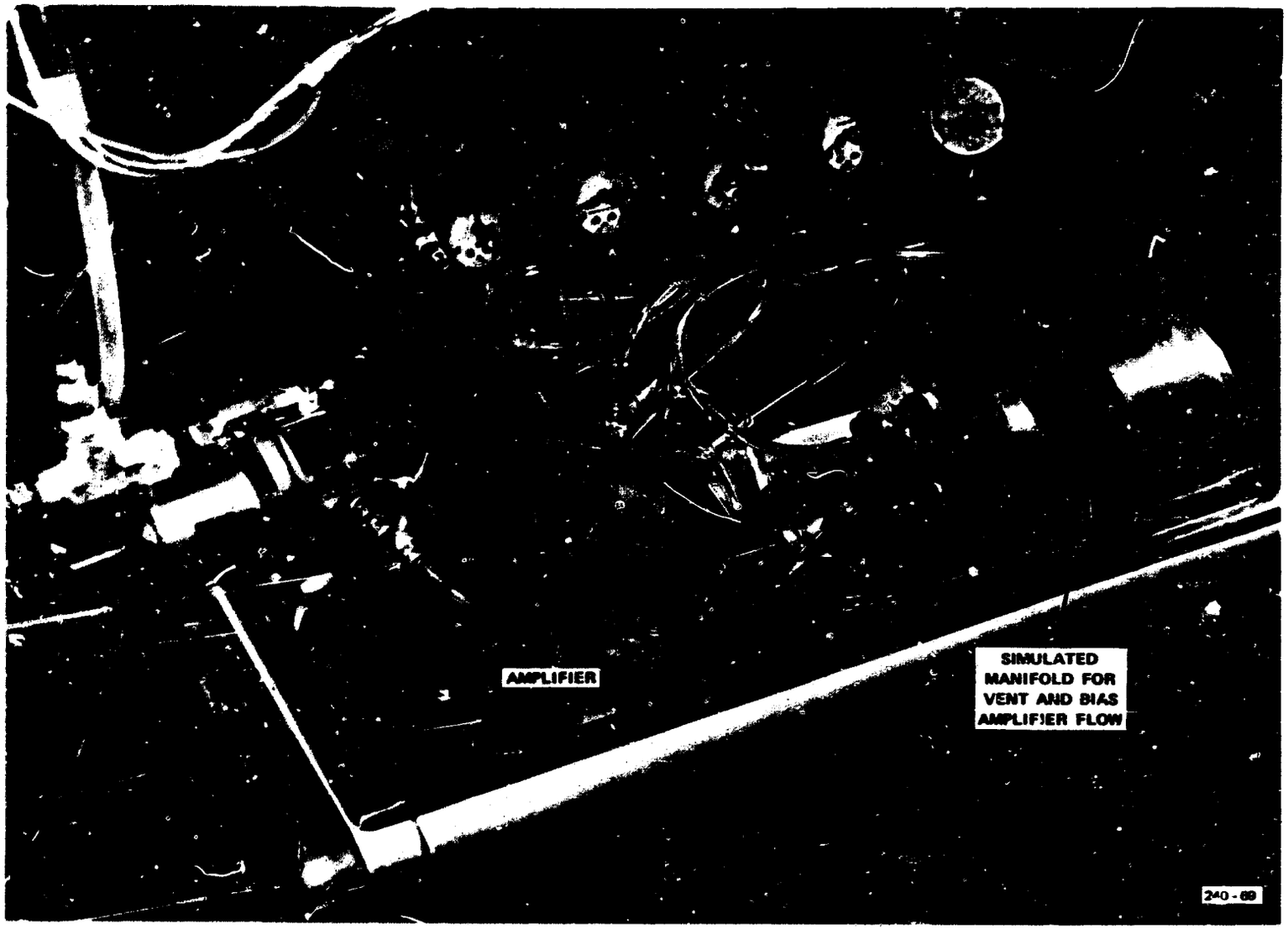

Figure 4-11 - Closed-Connect Fluidic Amplifier Test

can be altered for each installation as long as their effective combined resistance remains the same. Also, consideration would have to be given to the diameter of orifice A_2 because this directly affects the float force required to close it. One approach to maintaining a fixed combined resistance is to always install the same length line. The slack portion of the line would be coiled and stored within the tank.

4.3.3 Operating Switch and Manual Valve

4.3.3.1 Operating Switch

Because of the obvious complexity of the original operating switch design, a totally different and unique design was conceived during the early portion of the program.

The design is shown in Figure 4-12. It uses a specially designed Belleville spring which has two stable positions. That is, it is designed to invert (turn "inside-out") above a predetermined load. By attaching it to the operating switch such that the switch axis passes through the center of the Belleville spring, the switch will be positively positioned in either the closed or open position. The Belleville spring is designed to act as a diaphragm, across which a pressure drop can be established. By applying the pressure differential, $P_{switch} - P_{vent}$, the spring will drive the operating switch to the closed position when the fluidic amplifier switches from a high output at P_{valve} to a high output at P_{switch}. It was necessary to design the spring to respond to the minimum differential pressure which could be expected during automatic fueling. In addition, the total travel from

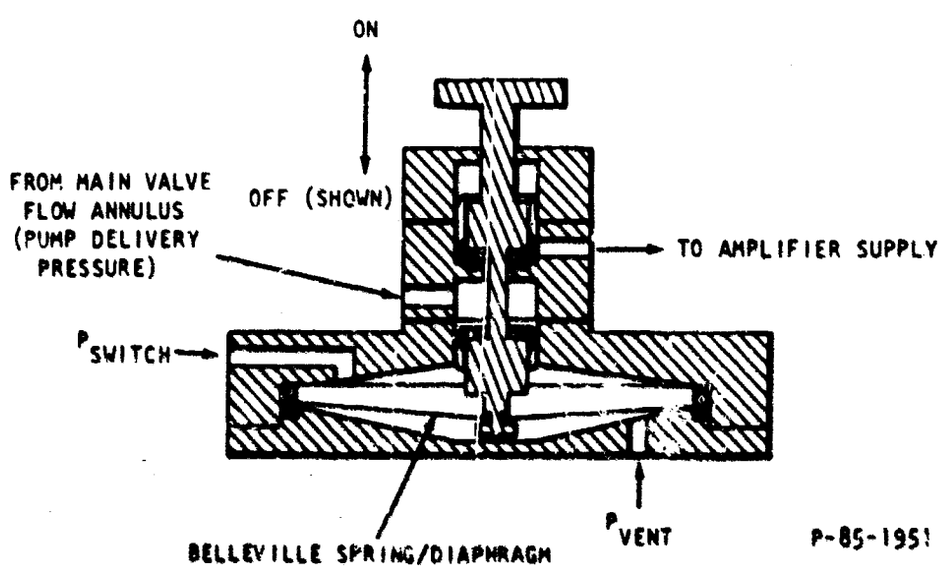

Figure 4-12 - Operating Switch

the normal free height of the cone-shaped spring to the inverted free height had to be sufficient to open the valve and also provide an operator with the feeling that he had done something. Since the design procedure for these springs in the "snap through" range is not well defined, a sample design was fabricated and tested. The material used was a beryllium copper alloy ASTM B194-55 (Berylco 25). The free height was 0.100 inch, which provides about 0.200-inch total travel to open the valve. Three thicknesses of 0.005, 0.0065, and 0.010 inch with outside diameters of 2.5 inches were fabricated. The 0.0065-inch spring was found to have a snap-through differential pressure level of 1.1 to 1.6 psi (depending on which way the pressure is applied). Since this was exactly within the range required, no redesigns were necessary. The valve sealing force available from this design is about 4 pounds, at a deflection of 0.010 inch.

4.3.3.2 Manual Valve

To allow an operator to fuel a vehicle with the fluidic automatic control inoperative, the nozzle control design includes a manual operating valve.

The design selected is a three-way, push-button operated valve which shunts pressure directly from the supply annulus around the main valve to the piston on the main valve. In the normally off position, the P_{valve} output of the fluidic amplifier passes unrestricted through the manual valve. The valve design is shown in Figure 4-13.

During fueling with the manual valve, the operator must hold the button in the depressed position. This helps to reduce the possibility of overflowing or bursting the tank.

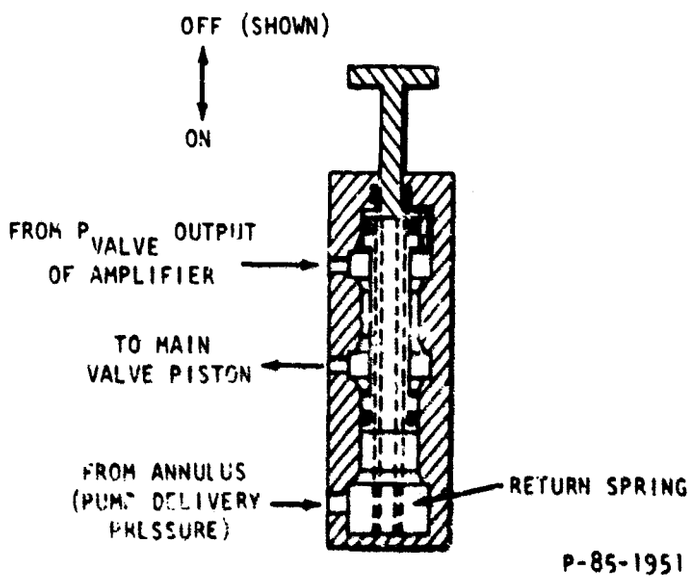

Figure 4-13 - Manual Valve

4.3.4 Sizing Analysis

4.3.4.1 Design Criteria

The main valve was designed to be statically balanced in either the open or closed position. The balancing was based upon the assumption that no flow forces would exist. Actually, flow forces were expected, but it was not believed practical to predict the magnitude or direction. Therefore, it was decided to await results of flow tests and make alterations to the valve to compensate these forces. Four criteria predominated the initial valve sizing. These were: sufficient flow area to meet the pressure drop requirements; sufficient piston area to allow operation down to the lowest possible annulus (pump delivery) pressure; adequate seating force to effect a leak tight shutoff; and minimum practical overall size.

4.3.4.2 Main Valve Flow Area

The flow area was sized prior to receipt of the commercial coupling. However, flow tests of the coupling later verified the assumption of a 10 psi pressure drop across the connector at a flow rate of 100 gpm. Thus, to stay within the 15 psi total pressure drop, the main valve was sized to provide no more than 5 psi of pressure drop at 100 gpm. The area was determined from

$$A_v = \frac{Q}{KC_d} \left(\frac{\gamma}{\Delta P}\right)^{1/2}$$

$$A_v = 1.26 \text{ inches}^2$$

where

Q = flow rate - 100 gpm

C_d = orifice coefficient - 0.8

γ = fuel specific gravity - 0.725

P = pressure drop - 5 psi

K = dimensional constant = $38 \frac{\text{min-in-lb}^{1/2}}{\text{gal}}$

Figure 4-14 shows the basic nozzle configuration with various dimensions designated. The main flow actually passes through two restrictions in series. The first, A_1, can be approximately defined as

$$A_1 = \pi\, dt$$

The second area is A_2 and can be defined by

$$A_2 = \frac{\pi d^2}{4}$$

In the figure, the diameter used to define A_1 appears larger than d, but in the initial design, the two were almost identical. Therefore, for this calculation, the assumption that both areas are functions of d was valid.

To keep the overall nozzle size reasonable, it was decided to limit the valve travel such that the pressure drop through area A_1 at maximum travel would be equivalent to that for area A_2. Therefore, the two areas were designed to be equal. The diameter and travel were then determined for an overall effective area of A_v.

$$A_v = \frac{A_1}{\sqrt{2}} = \frac{A_2}{\sqrt{2}}$$

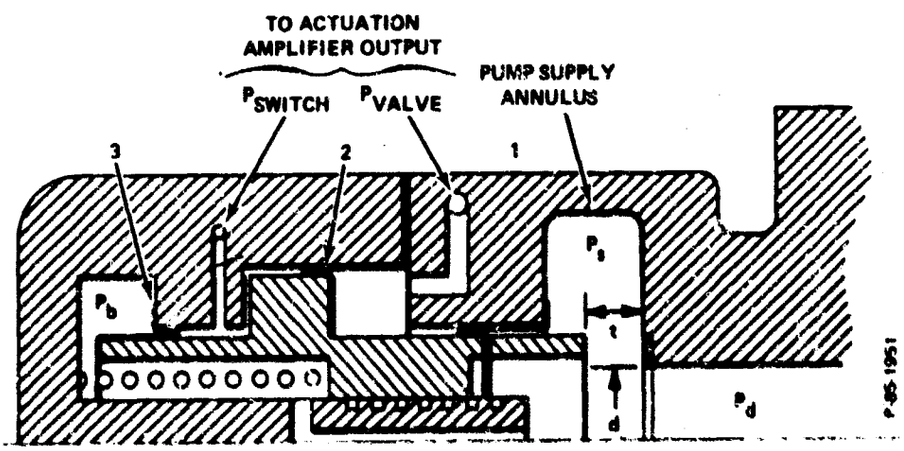

Figure 4-14 - Main Fuel Valve Dimensional Designations

which can be shown to be true for two equal orifices in series.

$$A_1 = (1.414)\ (1.26)\ \text{inches}^2$$

$$A_1 = 1.78\ \text{inches}^2 = A_2$$

The travel, t, was then determined by setting A_1 equal to A_2

$$\pi dt = \frac{\pi d^2}{4}$$

$$t = \frac{d}{4}$$

Substituting the expression for t into the equation for A_1,

$$A_1 = \pi d \left(\frac{d}{4}\right) = 1.78$$

$$d = 1.5\ \text{inches}$$

From this, the value for the maximum valve travel was determined to be

$$t = \frac{1.5}{4} = 0.375\ \text{inch}$$

4.3.4.3 Actuation System Design

The following criteria and considerations dictated the sizing of the valve return spring and the piston:

- The valve must be at maximum travel (0.375 in.) when the overall ΔP is 15 psi.
- The spring preload, F_s, was the only force available for sealing the closed valve.

- The available piston pressure differential ($P_{valve} - P_{switch}$) at an annulus pressure (P_s) of 15 psig was 7 psi as determined by amplifier tests.
- An overall nozzle diameter of 3.5 inches was considered to be the maximum desirable.

The principal concern and limiting design factor was the relatively low pressure available from the amplifier for positioning the valve. Since the valve regulates at positions less than the maximum travel position (P_s = 15 psig), the positioning accuracy will be dependent upon the friction encountered. Furthermore, it was desirable to maintain automatically controlled flow down to the lowest practical annulus pressure, P_s. This meant that the piston would have to be sized for a pressure differential as low as 1 or 2 psi if possible.

The rolling diaphragm seals were selected because of their advertized negligible friction characteristics, but their use results in larger overall package size. Therefore, before committing the design, a brief testing program was conducted to evaluate two types of sliding seals. The seals tested were a Teflon capped O-ring (Gld-Ring) and a U-cup seal. Tests were performed at reduced seal compression. Satisfactory breakout friction was achieved but soaking for a period of time in the test fluid caused the friction to increase to unacceptable levels.

The sliding seals were abandoned and the remainder of the design effort was concentrated on using rolling diaphragm seals.

These seals cannot be exposed to pressure reversals of more than a few psi because they will invert and jam in the convolution space. In the control design, when the fuel rises in the tank and the amplifier switches, the pressure differential polarity reverses. The reversal exists until the operating switch shuts off the amplifier supply.

In Figure 4-14, the three locations for the diaphragm seals are numbered. Referring to the figure, there are three possible pressures to which the back side of the valve piston could be referenced. They are: local atmospheric, amplifier vent pressure, or the amplifier output pressure, P_{switch}. If the back side of the piston is referenced to the amplifier vent pressure, diaphragm number 3 will experience a pressure reversal whenever the amplifier is active and the main valve is closed. If P_{switch} is used, diaphragm number 3 will still experience pressure reversals under the same conditions and diaphragm number 2 will see a pressure reversal whenever the amplifier switches to request the valve to close. This was the preferred arrangement from the standpoint of valve response because it was expected that the pressure reversal would add a closing force for a brief period before the operating switch shut off the amplifier supply pressure.

If local atmospheric pressure were used, no pressure reversals would occur at all. However, this approach was not pursued because of the potential for dirt entry and blockage of the vent opening due to dirt and/or ice

Based upon all the above considerations, it was decided to use back-to-back rolling diaphragm seals at locations 3 and 2.

The tradeoff available between piston effective area, A_p, spring preload, F_s, and minimum piston pressure differential at the closed position is shown in Figure 4-15.

Based upon a preliminary layout and the tradeoffs available, the selected design point was as follows:

$$A_p = 1.5 \text{ inches}^2$$

$$F_s = 3 \text{ pounds}$$

$$\Delta P_{min} = 2 \text{ psi}$$

From the amplifier data for an annulus pressure of 15 psig, the output pressure differential would be 7 psi.

Using these values, the spring rate, R_s, was calculated from

$$k_s = \frac{A_p(\Delta P_{max} - \Delta P_{min})}{t}$$

$$R_s = 20 \text{ lb/in}$$

4.3.5 Main Valve Testing

A separate series of tests was performed to evaluate the design of the integrated main valve and piston assembly. The operational characteristics evaluated were: dynamic stability of the valve and static balance, leakage when closed, and regulating characteristics including hysteresis.

4.3.5.1 Drag and Hysteresis

During the initial valve tests, severe drag and hysteresis were encountered. The design was reviewed with the diaphragm manufacturer and no discrepancies were found. The convolution spaces were increased slightly to no avail. Finally, the valve was tested with

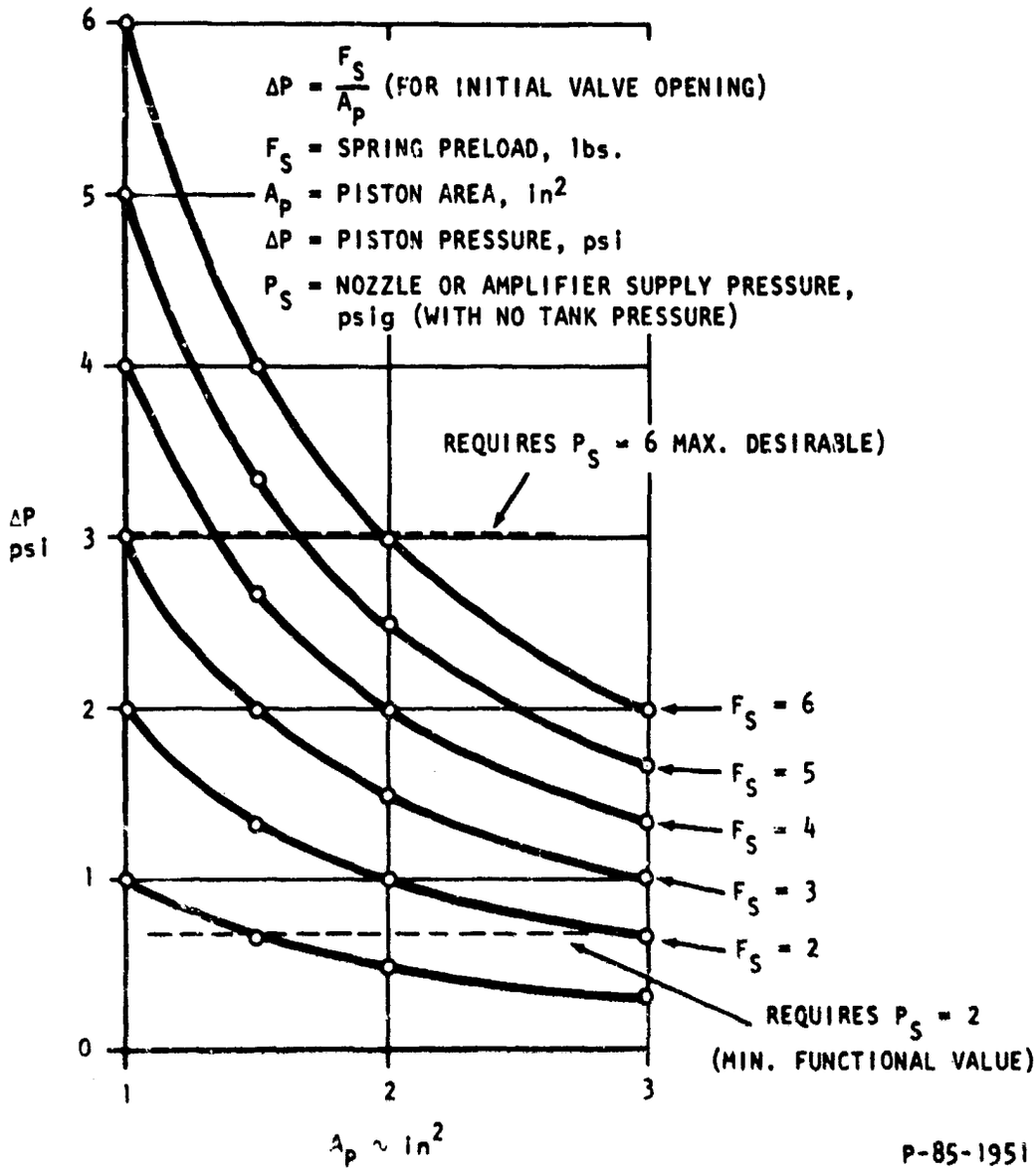

Figure 4-15 - Main Valve Design Parametric Tradeoff

only three diaphragms installed; i.e., the back-to-back configurations were removed. This resulted in satisfactory performance although a relatively wide hysteresis band was still exhibited over the entire mid-range of travel. This is shown in Figure 4-16.

The hysteresis for the three-diaphragm installation was on the order of 1 to 1.25 psi throughout the mid-range of travel. The hysteresis reduced to zero at both extremes of travel. Thus, at the closed position there was very little residual drag force.

It was thought that the extremely poor performance of the five diaphragm installation may have been due to rubbing between the back-to-back diaphragms. Concurrently, after further system analysis, it was concluded that three diaphragms would operate satisfactorily and not experience detrimental pressure reversals. When the amplifier switches and the pressure reversal begins, the valve moves toward the closed position. This tends to keep the piston pressure differential low because the cylinder volumes are changing. Also, when the valve motion reduces as it reaches the seat, or as soon as it slows down, P_{switch} will start to rise. However, as soon as the value of $P_{switch} - P_{valve}$ exceeds about 1.6 psi, the operating switch closes and all pressures decay.

It should be noted that during the entire test program, no diaphragm inversions occurred. This can be stated with assurance because inverted diaphragms can only be corrected by disassembly of the unit - they do not return to the correct position by applying the proper polarity pressure differential.

4.3.5.2 Stability and Closed-Valve Leakage

Figure 4-17 shows the original valve and seat design. The edge of the valve was made narrow to reduce Bernoulli forces on the valve and to increase the sealing pressure resulting from the spring preload.

This seat design was found to be inadequate for two reasons. First, the valve flow gain near the seat was so high that the valve chattered. Second, an effective seal could not be obtained. This was thought to be partly due to the hard rubber of the O-ring and partly the result of slight axial misalignment.

A new valve and seat concept was designed to alleviate both problems. This is shown in Figure 4-18. The elastomer is a 60 durometer Buna-N compound. The 45 degree contour was provided to reduce the flow gain near the seat.

This design solved the leakage problem and considerably reduced the tendency of the valve to chatter near the seat. Chatter was found to be a function of the annulus pressure, P_s, and the rate of travel of the valve in the vicinity of the seat.

With the original seat design, the valve was experiencing dynamic unbalance forces tending to close the valve. This

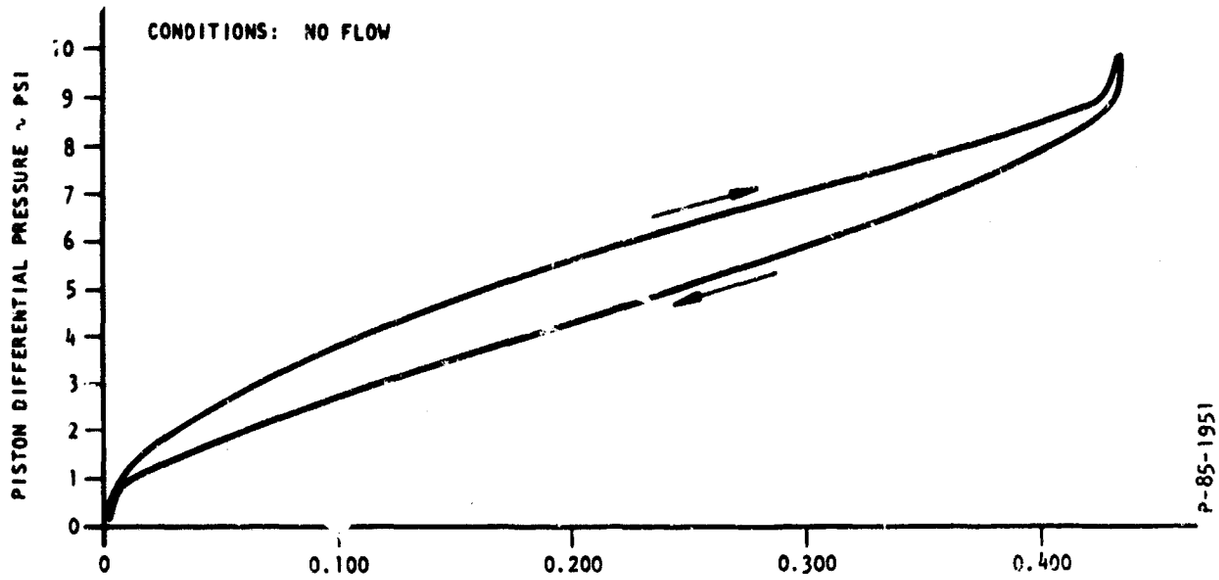

Figure 4-16 - Hysteresis With Three Rolling Diaphragms

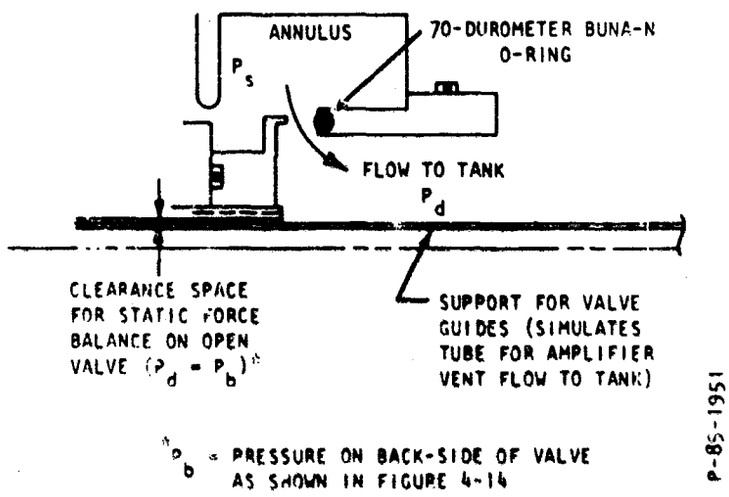

Figure 4-17 - Oringinal Valve/Seat Design

was theorized to be primarily the result of the Bernoulli forces acting on the metering edge of the valve. When the new seat design was tested, it was noted that the valve was unbalanced to open.

Inspection of the design led to a conclusion that the unbalance force was the result of an aspiration phenomenon occurring as the flow swept past the open end of the keeper (Figure 4-18). This lowered the pressure, P_b, on the back side of the valve, resulting in the opening force. Instrumented tests proved this theory to be correct. A disc was then added to eliminate the aspiration. This is shown in Figure 4-19.

The disc was also found to be an effective means for altering the valve dynamic characteristics. By adjusting the axial position of the disc, it was possible to eliminate the valve chatter. However, the valve still exhibited some dynamic unbalance. This was evidenced by non-linear travel versus piston pressure differential in the mid-range of its travel. However, at this point it was decided to assemble the breadboard version of the system for evaluation of overall performance.

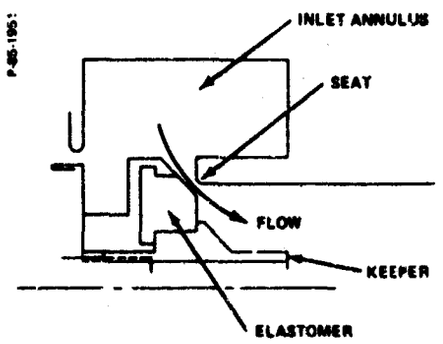

Figure 4-18 - Revised Valve and Seat

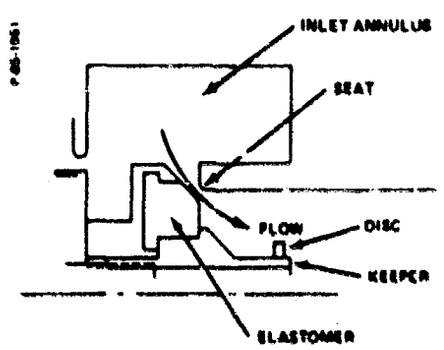

Figure 4-19 - Valve Modification

4.3.6 Breadboard Evaluation

Having achieved satisfactory main valve performance, the control circuit was assembled into a breadboard and evaluated. A photo of the test setup is shown in Figure 4-20. The only component not included in these tests was the manual control valve which is used to bypass the fluidic level sensing circuit. Since this valve is not complex and has no effect on the basic performance of the remainder of the system, it was decided to perform functional tests of this component during the prototype evaluation. This also saved fabrication of a separate test manifold.

For these tests, the Wiggins coupling (nozzle and receptacle) was attached to the main flow valve housing to simulate the back pressure which the valve would experience in actual fueling service. As can be seen from Figure 4-20, the operating switch was supplied directly from the main flow annulus. Flexible tubing was utilized to complete the remainder of the circuit. A monostable amplifier (20 MFID) with a 0.020-inch wide power nozzle and an aspect ratio of two (2) was used in the level sensing circuit. For initial tests, the bias orifice (A_1) had a 0.026-inch diameter and the sensing line orifice (A_2) had a 0.050-inch diameter. The operating switch was initially assembled with a 0.0065-inch thick Belleville spring which switched "over-center" at 1.5 psi differential pressure. A standard Clippard flow switch (No. MTV-3) was used to block the sensing line, simulating float shutoff when fueling is complete.

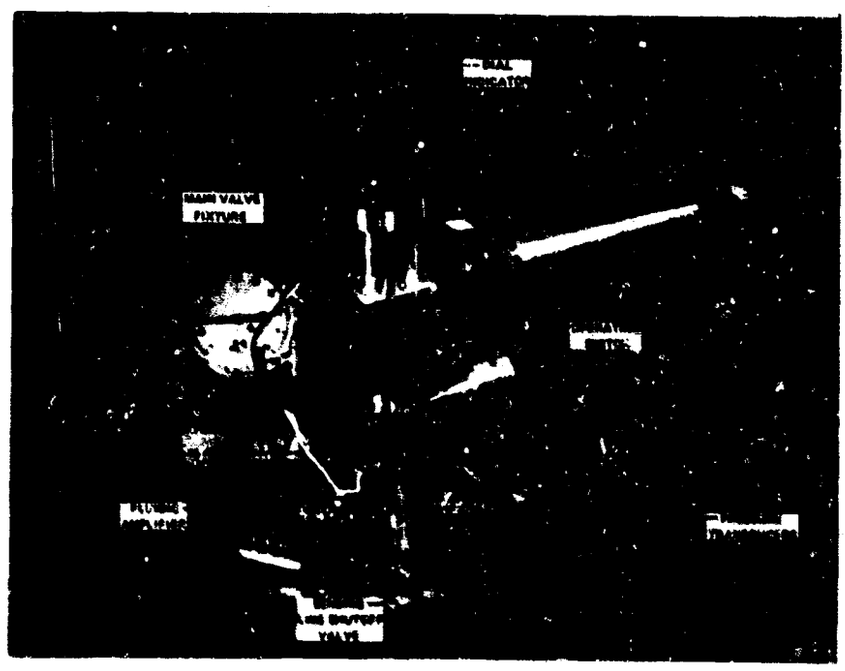

Figure 4-20 - Breadboard Control Circuit Test Setup

Initial operation of the circuit indicated that the operating switch button had to be held out firmly while the main valve opened. Valve opening was slow and inconsistent. Closing time after a "full tank" signal was initiated was approximately three seconds. Evidently, as valve motion began, P_{switch} increased as the fluid in the P_{switch} cavity was forced out by the valve motion. At the same time, by pulling on the operating switch button, fluid in the Belleville cavity was being forced out of the operating switch housing. All of this fluid cannot be vented through the amplifier at a rate which will prevent P_{switch} from building up to the Belleville switching pressure. First attempts to improve the operating switch as the main valve opened included substitution of an amplifier with an aspect ratio of three (3). The larger vent area of this amplifier was not able to prevent the buildup of P_{switch}. The smaller amplifier was reinstalled and a 0.010-inch thick Belleville was installed in the operating switch. This increased the Belleville switching pressure to 3.5 psi. This modification did not improve the opening operation of the system since P_{switch} reached approximately 4 psig for a sufficiently long time interval to close the operating switch when the button was released. Closing time of the main valve with this setup was somewhat less than three seconds, apparently due to the fact that the operating switch remained open longer, thereby keeping P_{switch} on the main valve piston during the complete closure cycle.

During the above tests of the operating switch, the main valve was found to be sensitive to a decreasing supply pressure surge. A rapid decrease in supply pressure disrupts the fueling operation by causing the main valve to close. Since valve closure is a function of an increase in the piston differential pressure, $P_{switch} - P_{valve}$, it followed that the fluidic amplifier must switch during the surge. The sensitivity was believed to be due to a momentary flooding of the amplifier interaction region by fluid pumped from the piston chamber. (The amplifier interaction region is that region where the control flow impacts upon the power jet.) A downward surging supply pressure causes an abnormal decrease of the piston pressure differential. The valve moves toward the closed position and pumps fuel from the P_{valve} cavity. This fuel must flow back into the amplifier output, out of the leg vent and into the vent manifold. However, the vent manifold is already packed and because of volume restrictions, the flow path is restricted. Therefore, it was theorized that the back pressure in the vent manifold forced some of the fuel into the interaction region, causing the amplifier to switch momentarily.

It should be noted that the amplifier was not sensitive to increasing supply pressure surges.

At this point, then, three major problem areas were defined for the control circuit:

(1) Poor operating switch performance

(2) Slow closing response

(3) Surge sensitivity

It was decided to attack all of these problems simultaneously by instrumenting key points in the circuit and noting the effect of circuit modifications in all three areas. Pressure transducers were used for Sanborn recording of P_{valve}, P_{switch}, P_s (annulus supply pressure), and P_{amp} (amplifier supply pressure). Main valve fuel flow was measured in addition to the above parameters

The various circuit arrangements used for these tests are shown in Figures 4-21 through 4-23 Typical Sanborn recordings are shown in Figures 4-24 and 4-25

In the circuit of Figure 4-21, P_{valve} was applied to the back side of the operating switch Belleville. By pressurizing the Bellevilla in this manner, the increase in P_{switch} was counteracted by P_{valve} and the operating switch did not close during the startup sequence. Initial tests of the circuit indicated a closing time of 1.50 seconds. During later tests, however, valve hunting and instability were apparent. In addition, manual shutoff was not practical because the operator had to overcome a pressure differential acting against the operating switch piston travel.

For the circuit arrangement shown in Figure 4-22, the back side of the Belleville was vented to atmosphere. This did not improve the opening operation of the switch and increased the surge sensitivity of the main valve By also venting the top of the main valve piston to atmosphere, the opening operation of the switch was improved since one of the sources of an increase of P_{switch} was eliminated. However, if the operating switch was opened rapidly, P_{switch} would still increase enough to close the switch. Valve closing time was 2.33 seconds for this mode. The surge sensitivity problem was not eliminated.

The circuit arrangement shown in Figure 4-23 utilized an orifice between the P_{switch} and P_{vent} cavities of the operating switch. Several orifice diameters were tried but the 0.038-inch diameter size proved to be optimum The orifice limits the increase of P_{switch} during startup and surges. applying P_{switch} to the top of the main valve piston, the valve closing time was approximately 1.60 seconds as shown in Figure 4-24. During this time interval, 2.17 gallons of fuel flowed into the tank after a simulated full tank signal was given at a 100 gpm flow rate. The operating switch functioned with little holding effort during startup and there was no surge sensitivity, although the main valve closed momentarily (Figure 4-25) during a surge and then reopened to a new position governed by the new supply pressure.

This completed the breadboard test evaluation.

4.3. Prototype Evaluation and Demonstration

The prototype evaluation included a functional checkout of the assembly, necessary hardware modifications, and demonstration testing prior to shipment to the United States Army Mobility Equipment Research and Development Center (USA MERDC), Fort Belvoir, Virginia.

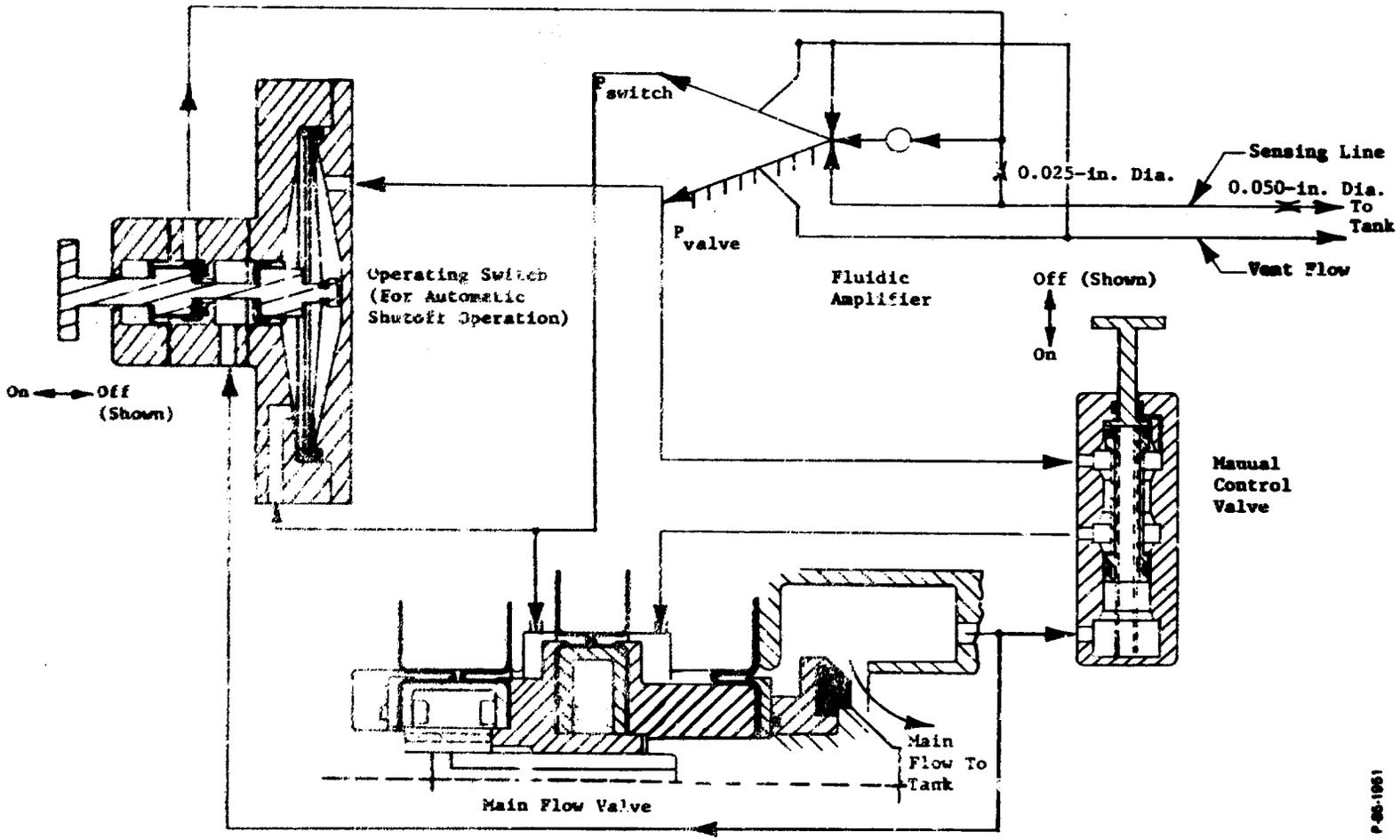

Figure 4-21 - Control Circuit No. 1

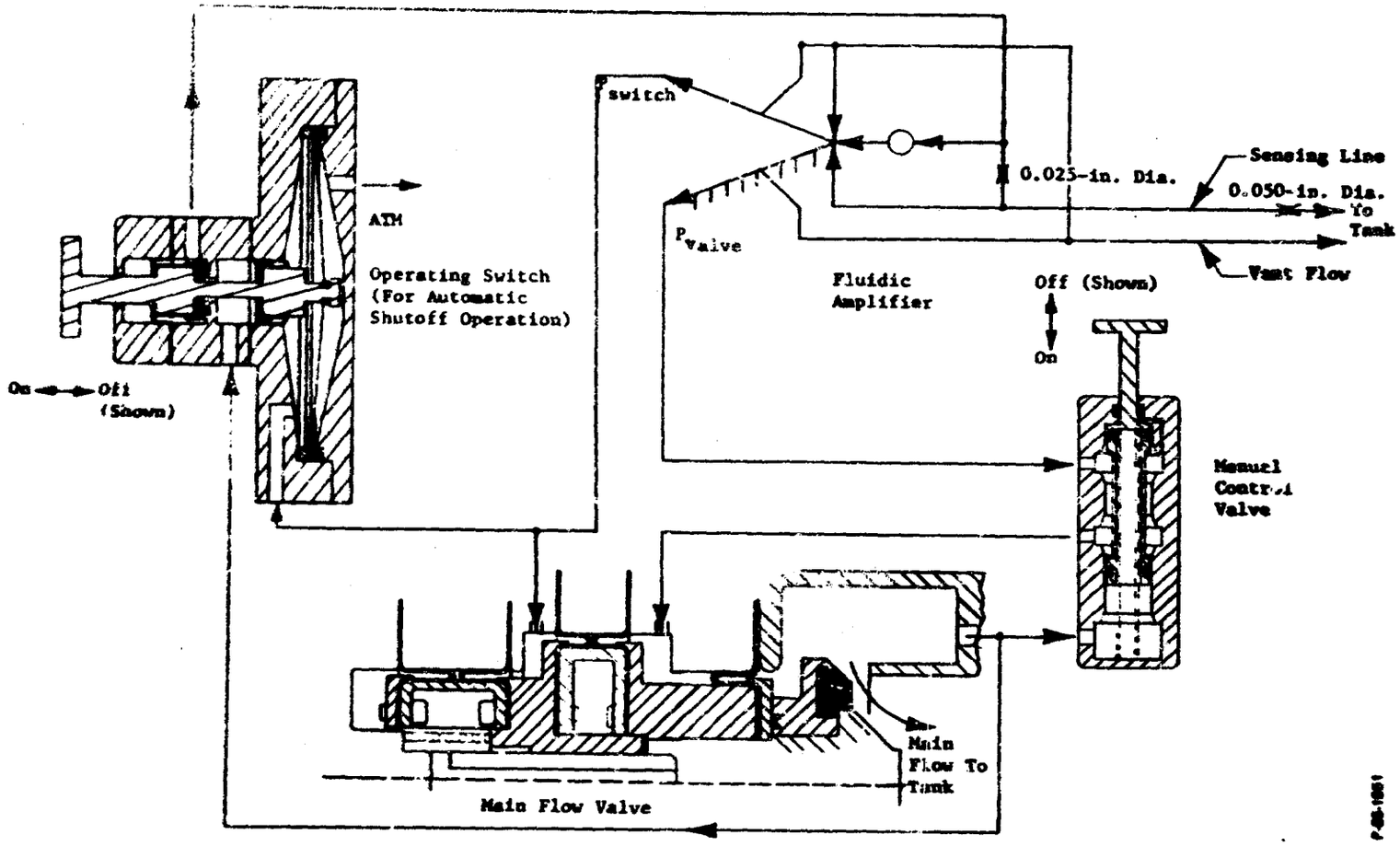

Figure 22 - Control Circuit No. 2

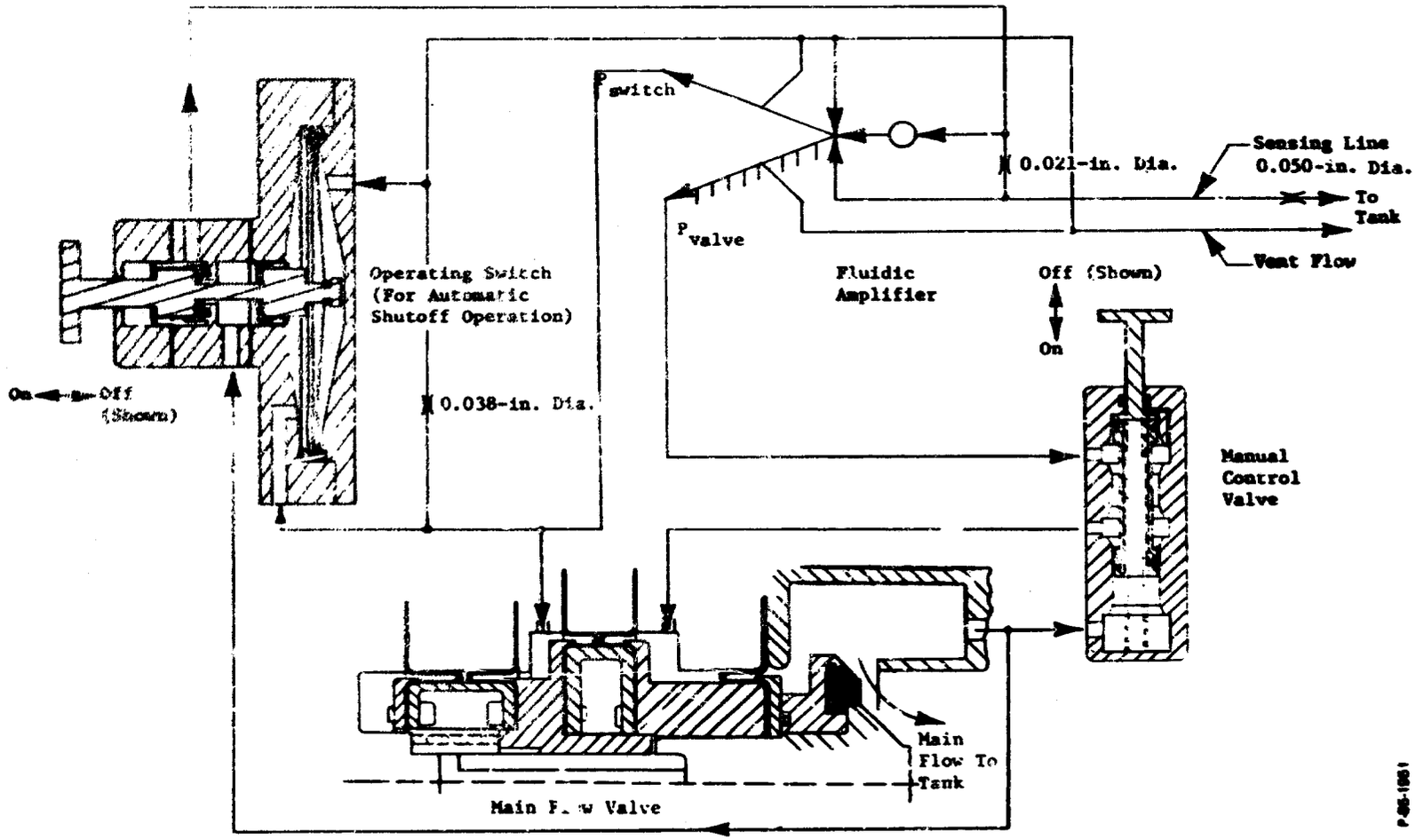

Figure 4-23 - Final Control Circuit No. 3

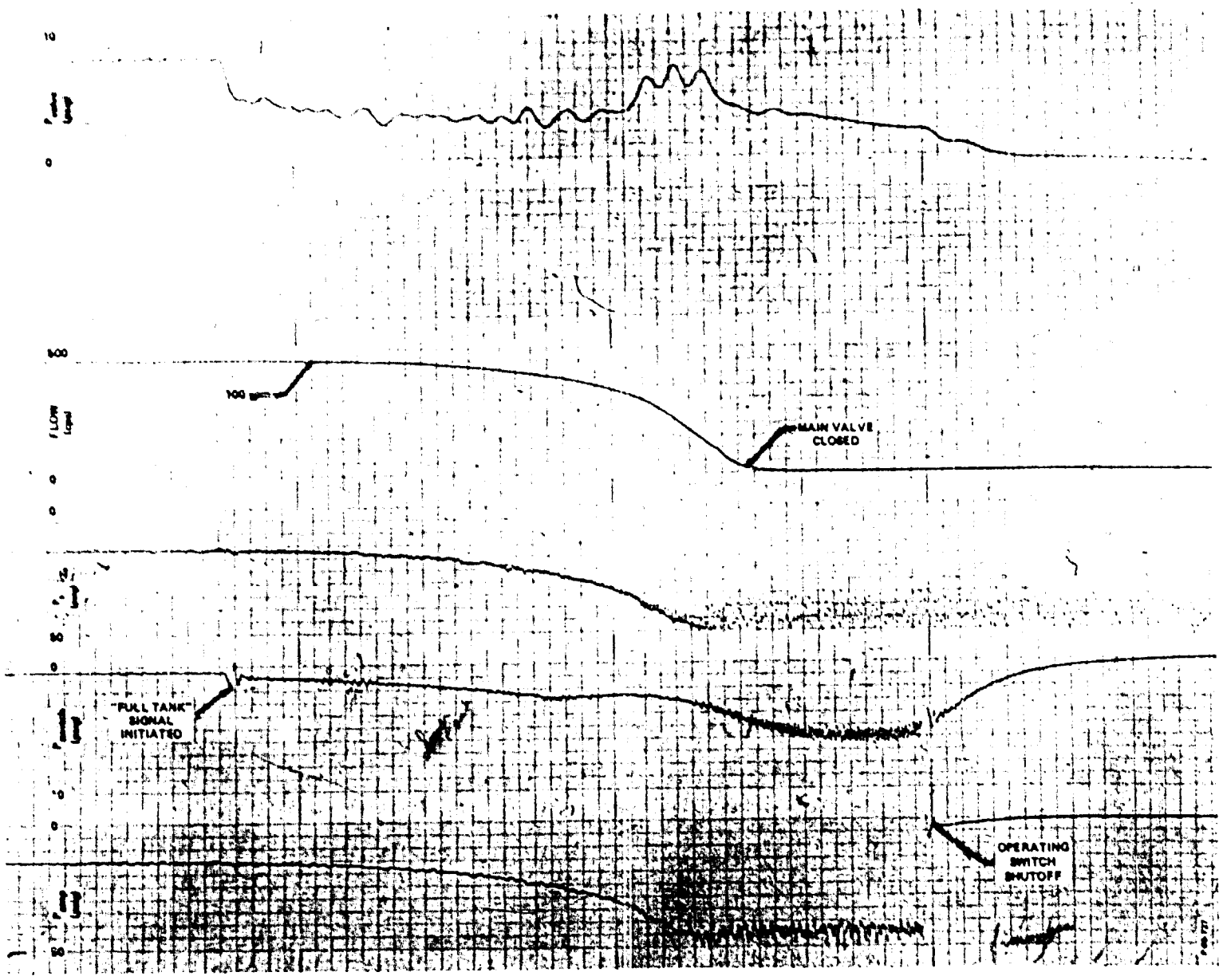

Figure 4-24 - Breadboard Control Circuit Performance (Chart Speed = 100 mm/sec)

Best Available Copy

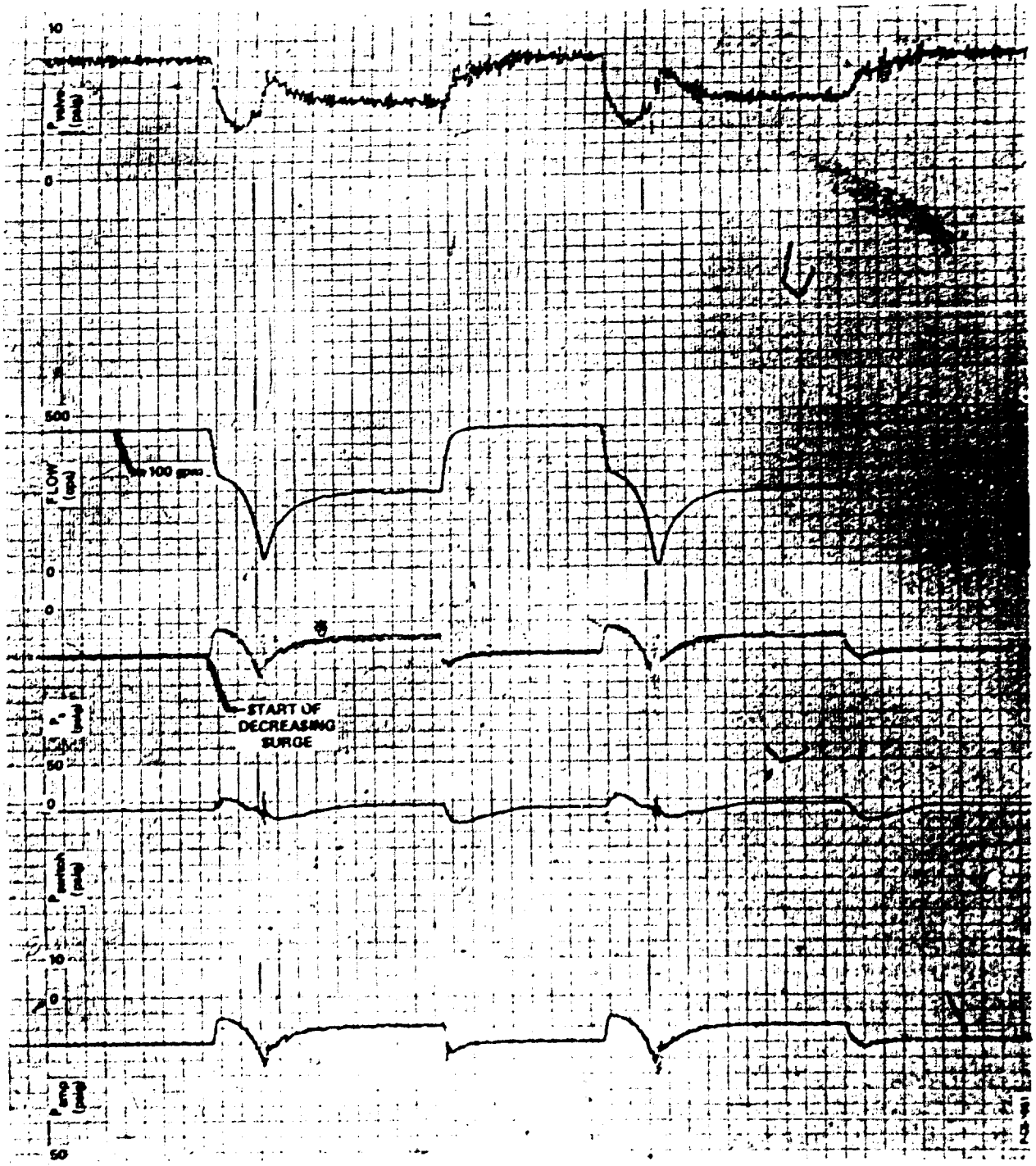

Figure 4-25 - Effect of Surge on Breadboard Control Circuit
(Chart Speed = 10 mm/sec)

Best Available Copy

Two views of the prototype closed-connect nozzle are shown in Figures 4-26 and 4-27. Figures 4-28 and 4-29 are photographs of the tank-mounted receptacle to which the nozzle mates during fueling. Test installation of the assemblies is shown in Figure 4-30.

4.3.7.1 Preliminary Tests

The fluidic closed-connect fueling nozzle was assembled and installed for testing in a 55-gallon fuel drum as shown in Figure 4-30. The test fluid was AMSCO Odorless Mineral Spirits, with a specific garvity of 0.760 at 60°F. First tests of the assembly at low flow rates indicated that all of the components functioned as anticipated except that premature shutoffs occurred.

This was determined to be caused by impingement of the main flow on the signal flapper valve located in the receptacle. This problem was solved by installing a shield in front of the flapper valve to direct flow away from the valve and float assembly.

At flow rates higher than 92 gpm, the main valve was unstable as the poppet approached the seat during the closing sequence. Dimensional checks of the assembly were made to verify the main valve spring preload. Amplifier function was also checked by measuring critical pressures in the fluidic circuit. These items were within specification.

The prototype uses most of the valve parts from the breadboard assembly and the breadboard had been stabilized by revising the seat design and including the impingement disc on the valve keeper. Therefore, the reoccurrence of instability was not anticipated.

The prototype main flow body had been redesigned externally to accept the closed-connect coupling, but was unchanged internally from the breadboard configuration. The most obvious difference between the prototype and breadboard assemblies was the integrated assembly of the fluidic circuit into the prototype whereas plastic tubing was utilized in the breadboard setup. The compliance of the plastic lines could have helped reduce the valve excitation.

The instability problem is basically caused by flow forces on the valve surfaces. Stabilization of the valve could possibly be accomplished by recontouring the valve poppet and/or seat. However, an extensive analytical and experimental program would be required to arrive at the proper combination. In order to avoid this expense, it was decided to try damping the valve either with orifices in the amplifier outputs (P_{valve} and P_{switch}) or by restricting the flow passage between the front and back sides of the main valve piston for valve positions of 0.10 inch or less.

4.3.7.2 Damping Orifice Tests

The first tests performed to damp the main valve utilized orifices in the P_{valve} and P_{switch} amplifier output ports. Installation of an orifice in either of these ports has the effect of

Best Available Co

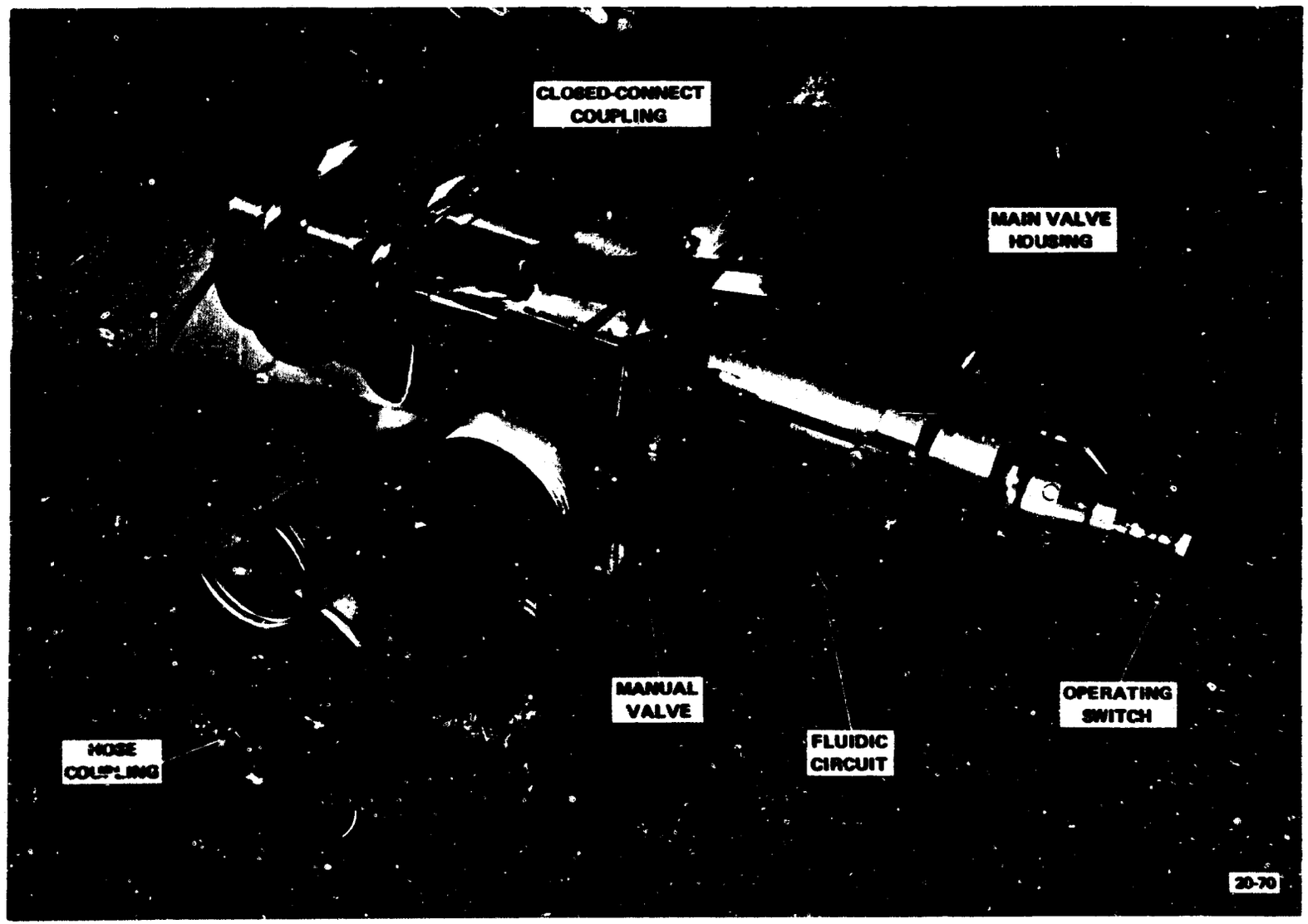

Figure 4-26 - Fluidic Closed-Connect Fueling Nozzle - Rear View

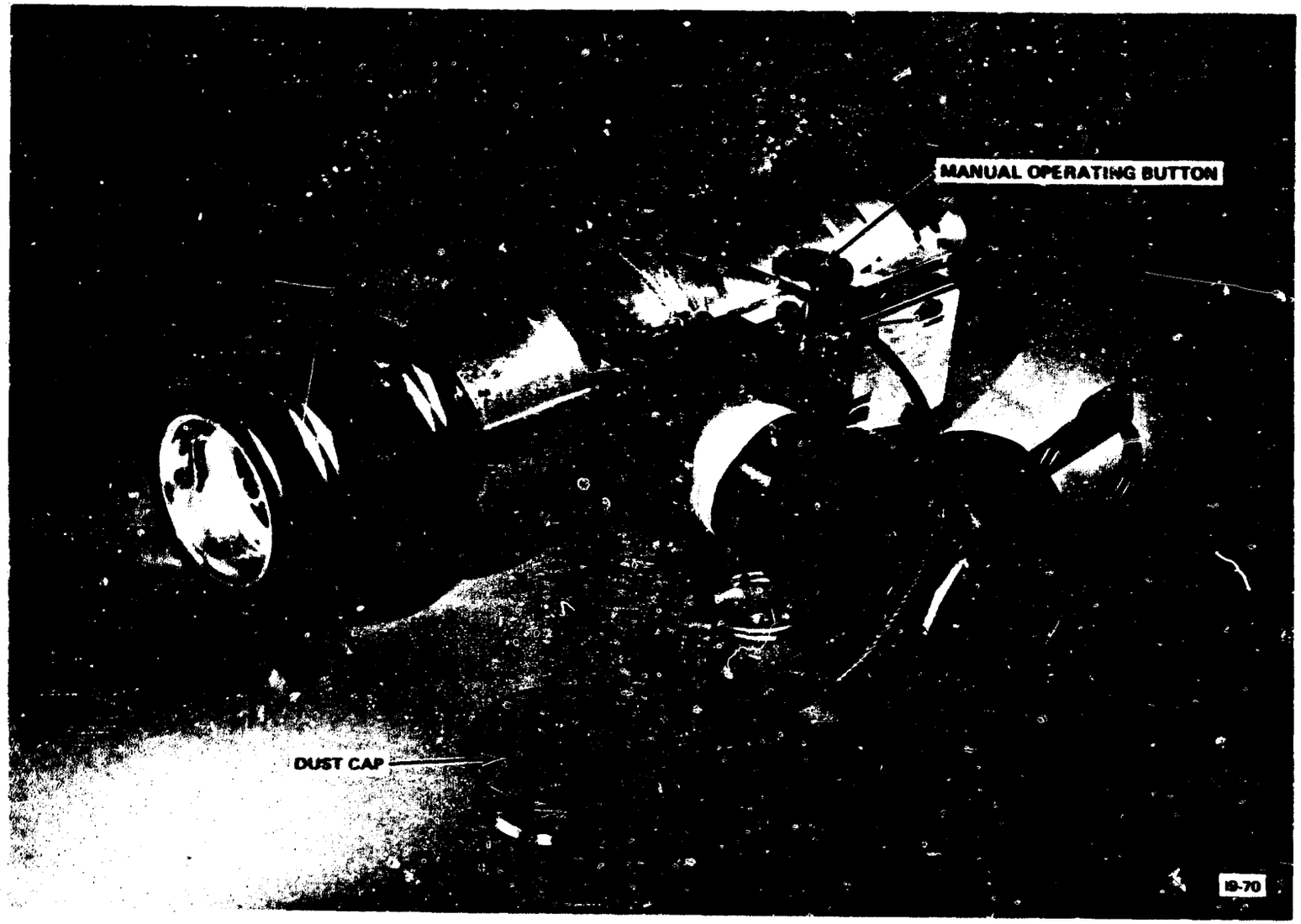

Figure 4-27 - Fluidic Closed-Connect Fueling Nozzle - Front View

Figure 4-28 - Closed-Connect Fueling Nozzle Receptacle, Front View

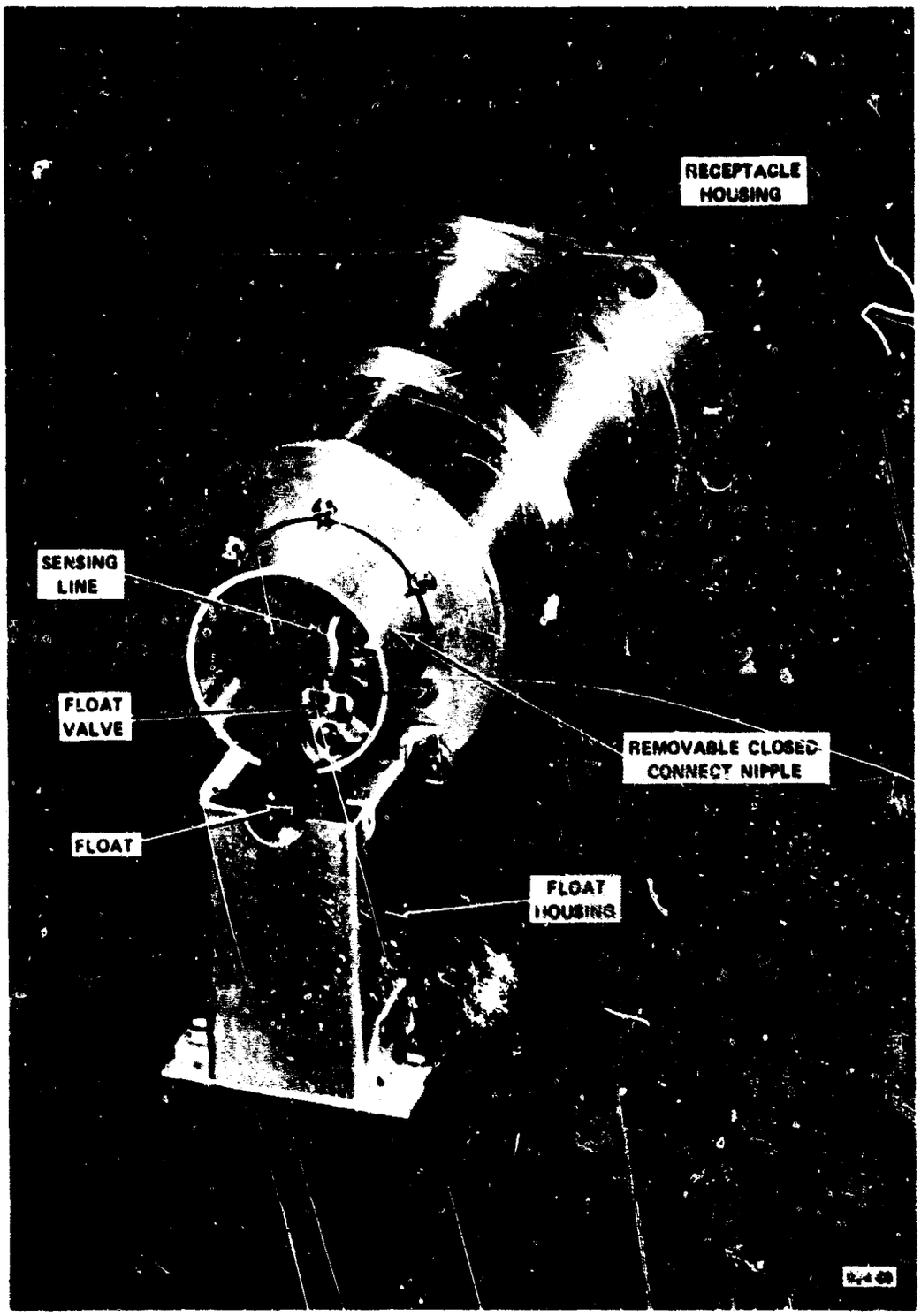

Figure 4-29 - Closed-Connect Fueling Nozzle Receptacle, Rear View

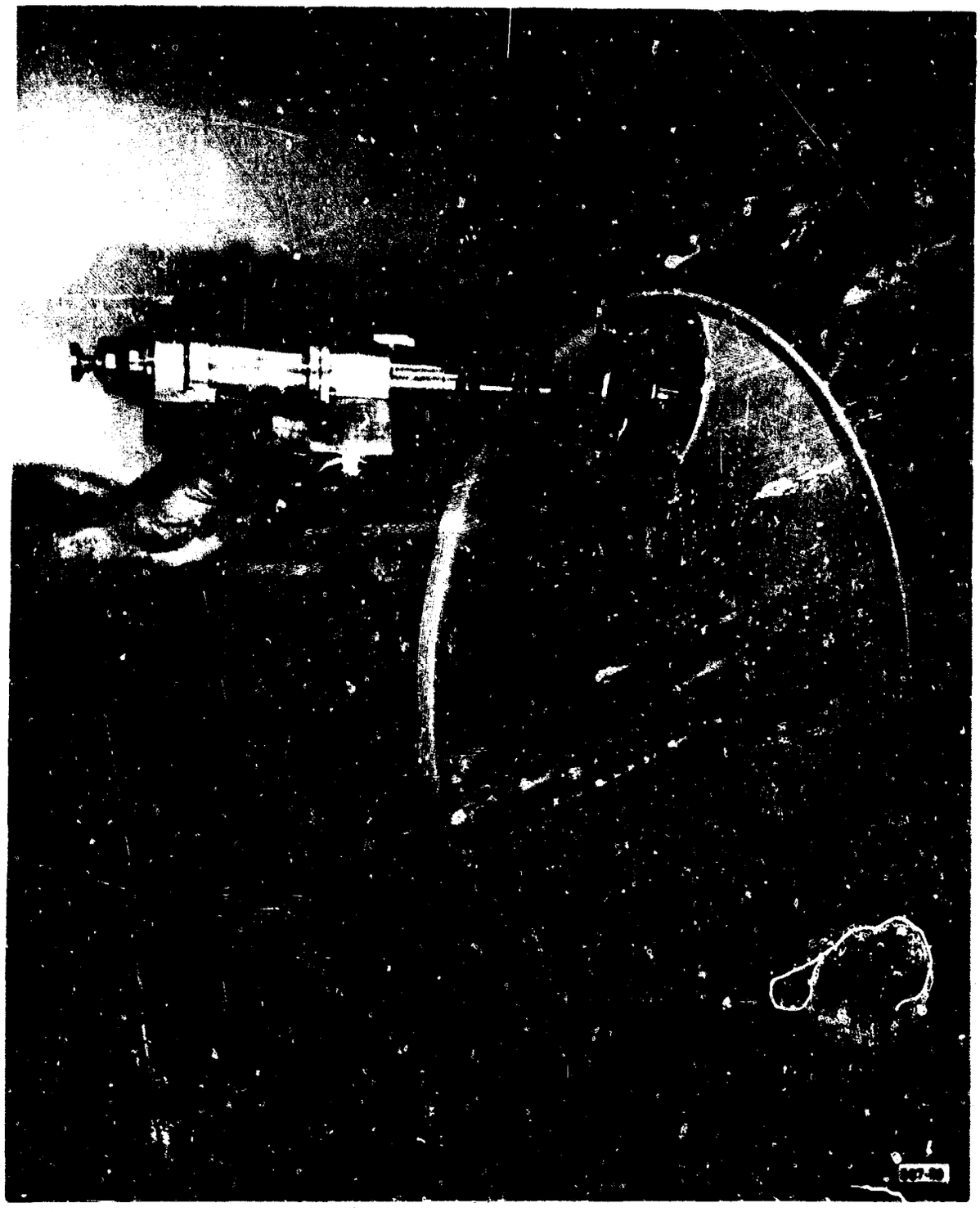

Figure 4-30 - Test Installation of Nozzle and Receptacle

attenuating the valve velocity in either direction because the flow from the amplifier to the piston cavities and the flow from the cavities to the amplifier must pass through the orifice. Various orifice combinations were used for these tests and the best stable performance was obtained with an 0.025-inch diameter orifice in the P_{valve} port and a 0.099-inch diameter orifice in the P_{switch} port. Although stable operation was achieved with these orifices, the closing response time was as long as 9 seconds (when shutting off a 100 gpm flow). A larger orifice in the P_{valve} line improved response but the valve chattered. A smaller orifice in the P_{valve} line significantly increased the closing response time. The response time was not increased with a larger orifice in the P_{switch} line, and with orifices larger than 0.100-inch diameter, the valve chatter re-occurred. Smaller orifices in the P_{switch} line resulted in a slower valve opening time and a point was reached where the valve moved so slowly near the seat that it became unstable. The best tradeoff then was an 0.025-inch diameter orifice in the P_{valve} line and a 0.099-inch diameter orifice in the P_{switch} line.

4.3.7.3 Close-Clearance Guide Evaluation and Response Tests

In order to improve the closing response of the valve, another damping technique was experimentally evaluated. This technique utilized an orifice in the flow passage which communicates the pressure downstream from the main valve to the back side of the main valve. This passage was originally designed to be wide open so that the pressure force acting on the face of the main valve could be balanced by a force of equal magnitude on the back side of the valve.

The orifice was implemented with a close-clearance valve guide installed as shown in Figure 4-31. The guide was designed to produce the orifice effect for valve positions up to 0.150 inch from the seat. For the remainder of valve travel (up to 0.400 inch), the passage was essentially wide open. In this manner, the valve would move at its maximum rate for the greater portion of travel and would be slowed down in the region near the seat where the unstable condition was encountered. The orifices used in the amplifier outputs, as explained above, were effective for the entire valve travel and provided damping even when it was not required. Thus, a faster response could be expected with the close-clearance guide technique.

The full 0.150 inch of close-clearance length was utilized to obtain the best stable performance for both automatic and manual operation. Less close-clearance guide length resulted in intermittent unstable operation. With the close clearance guide installed, the closing response of the nozzle for automatic shutoff of a 100 gpm fueling rate is shown in Figure 4-32. The initiation of the nozzle shutoff sequence is the point at which P_{switch} begins to increase. An instant ($\sim$0.01 sec) before this point, the tank float has blocked the signal line, increasing the amplifier control pressure and switching the

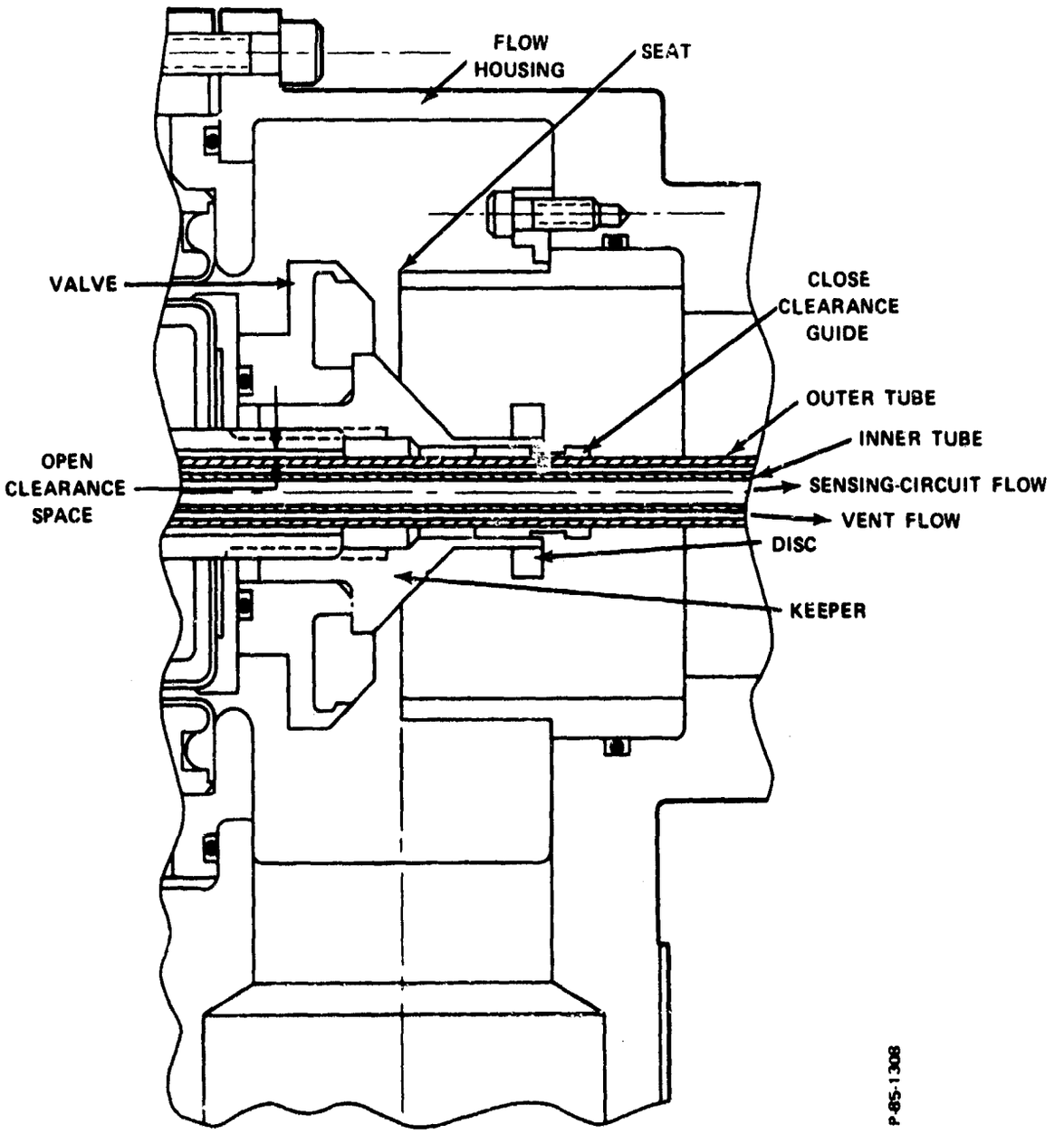

Figure 4-31 - Close-Clearance Guide Installation

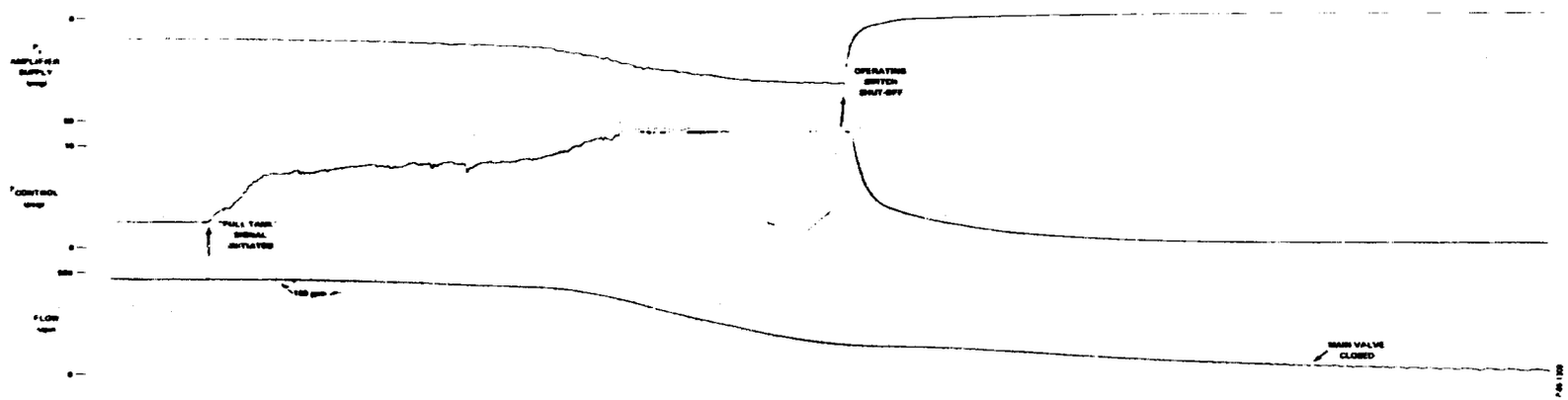

Figure 4-32 - 100 gpm Response Data for Automatic Operation of Fluidic Closed-Connect Fueling Nozzle (Chart Speed = 100 mm/sec)

amplifier from the P_{valve} to the P_{switch} output port. From the data, the closing response is approximately 3.5 seconds. Operating switch shutoff occurs before complete valve closure as indicated by the shutoff of amplifier supply pressure. For lower flow rates, the response of the valve is much better because the flow forces are lower and the total valve travel is less. Figure 4-33 presents response data for a 25 gpm fueling rate. As indicated, the main valve closes in approximately one (1) second. Operating switch shutoff occurs 0.5 seconds later. (During this latter interval, only amplifier vent flow is entering the fuel tank.)

When the nozzle is shut off manually, the nozzle closing time increases slightly since a P_{switch} pressure is not available to aid valve closure. Figure 4-34 indicates that approximately 3.9 seconds are required for manual shutoff at a 100 gpm fueling rate. As a result of these tests, the close-clearance guide was retained in the final prototype design.

4.3.7.4 Tank Level Variation for Automatic Shutoff

Since there is a change in nozzle shutoff time with flow rate, there will be a difference in the "full" tank level with flow rate. For the 55 gallon drum used in these tests, the level variation from a 25 to a 100 gpm flow rate was 2.0 inches. For a common fuel tank with a cross section of two (2) feet by two (2) feet, this level variation amounts to 1.94 gallons.

4.3.7.5 Surge Sensitivity Tests

Typical surge sensitivity data are shown in Figure 4-35. The surge, as indicated by a drop in supply pressure, P_s, results in a nozzle flow surge from about 100 gpm to nearly zero. During this interval, the valve is almost closed. It then reopens to permit fueling at the lower supply pressure and flow (in this instance approximately 25 gpm).

4.3.7.6 Residual Flow After Disconnecting Nozzle During Fueling

A test was run to measure the amount of spillage from the nozzle when the nozzle is disconnected from the tank receptacle during the fueling operation. While fueling at a rate of 100 gpm, the nozzle was separated from the tank and the residual flow was caught in a shallow pan and measured in a graduate. The measured residual flow under these conditions was 25 cc (6.6×10^{-3} gal). This flow comes entirely from the amplifier vent circuit which is not deactivated until the operating switch is automatically shut off — after separation of the nozzle and receptacle.

When the nozzle and receptacle are separated (while fueling is taking place), supply pressure is trapped between the seated main valve poppet and the closed-connect coupling. The closed-connect coupling is, therefore, "hydraulically locked," preventing the

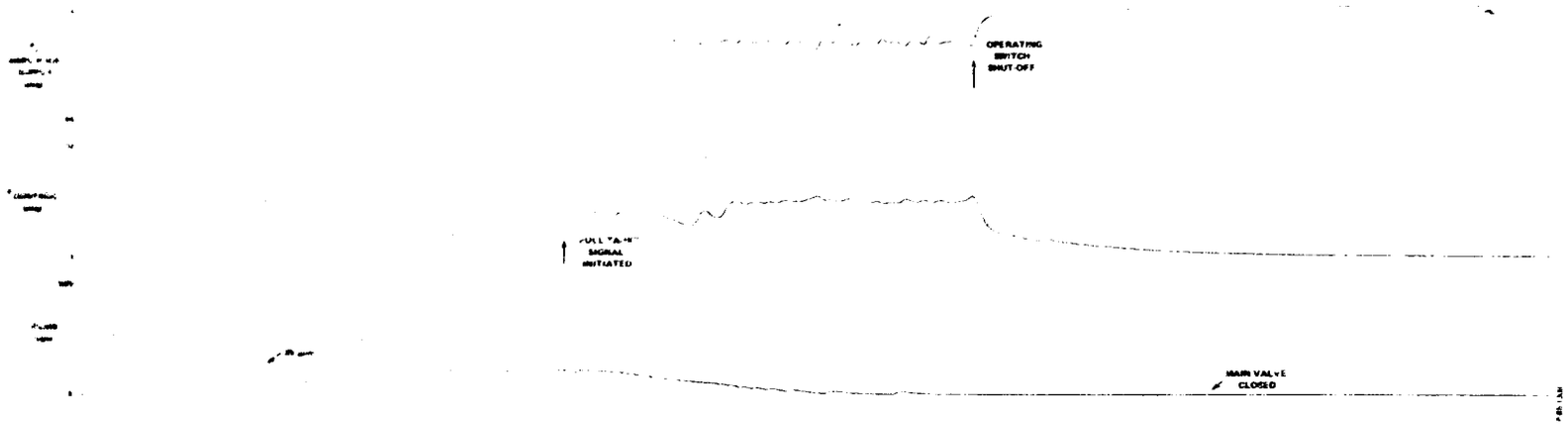

Figure 4-33 - 25 gpm Response Data for Automatic Operation of Fluidic Closed-Connect Fueling Nozzle (Chart Speed = 100 mm/sec)

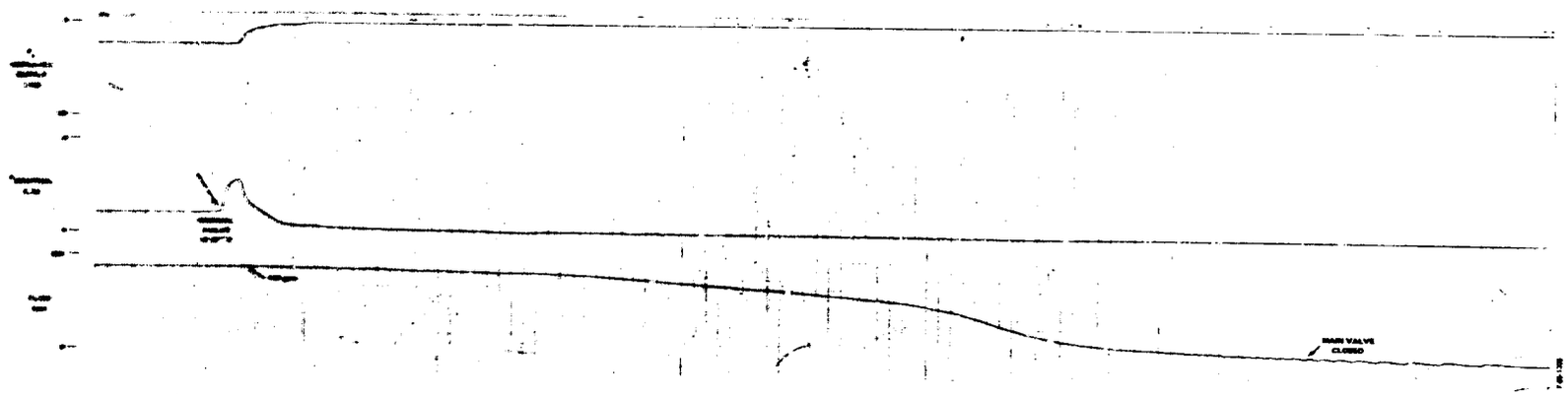

Figure 4-34 - Response Data for Manual Operation of Closed-Connect Fueling Nozzle (Chart Speed = 100 mm/sec)

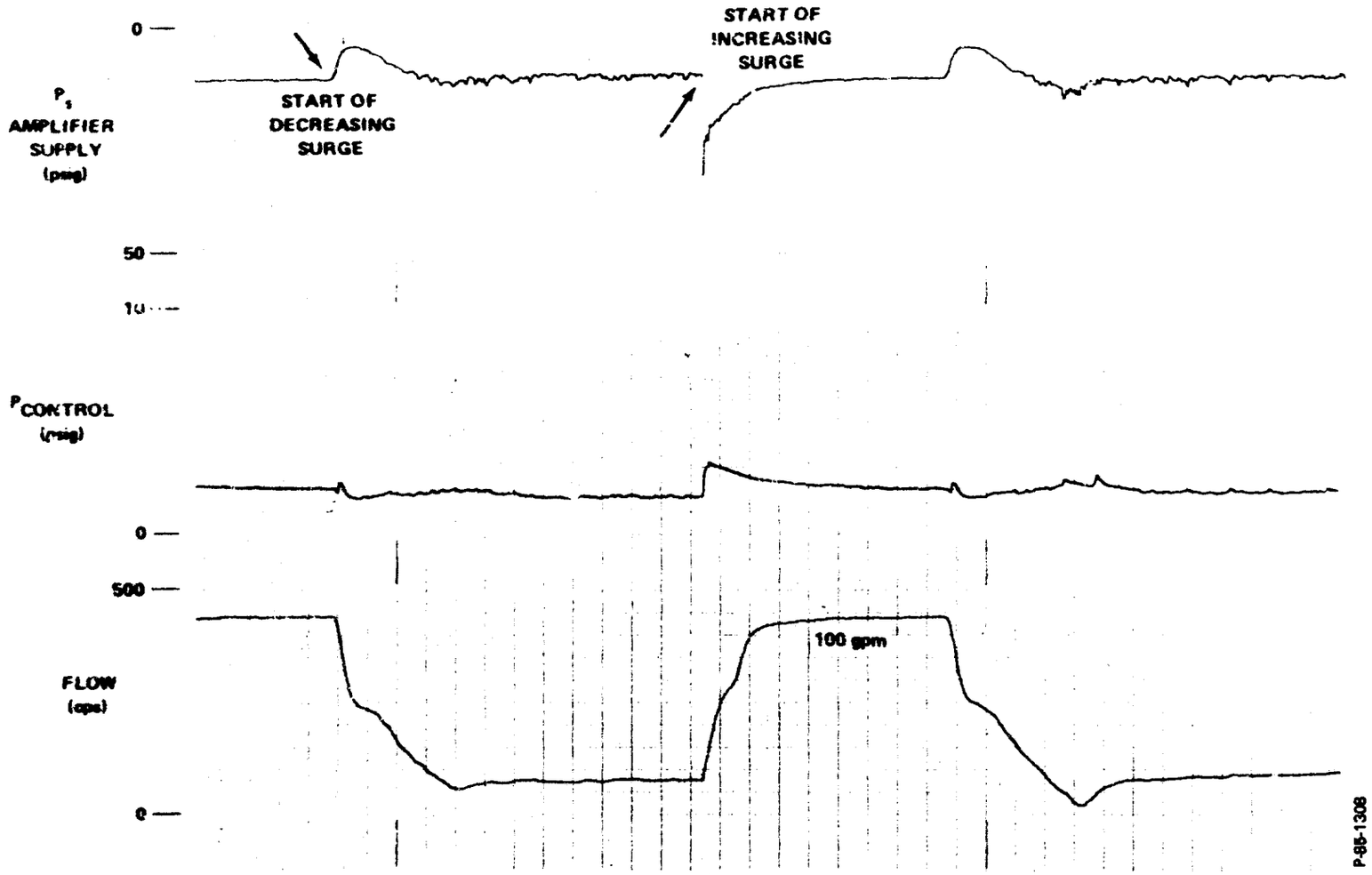

Figure 4-35 - Surge Data for Closed-Connect Fueling Nozzle (Chart Speed = 10 mm/sec)

reconnection of the nozzle to the tank. No special provision has been made in the prototype nozzle to automatically relieve the trapped pressure. At the present time, this pressure may be bled by disconnecting the inlet hose, reaching into the main valve annulus with a soft rod, and moving the main valve poppet off the seat. The pressure may also be relieved by unscrewing the closed-connect coupling from the nozzle body. Corrective techniques are discussed later.

4.3.7.7 Hydrostatic Tests

The nozzle was hydrostatically pressure-checked utilizing a hand pump. There was no evidence of leakage when the nozzle was pressurized to 100 psig for one (1) minute.

4.3.7.8 Nozzle Flow Tests

Figure 4-36 presents flow data for the closed-connect nozzle. Since the main valve can be actuated either manually or by means of the fluidic circuit, it was necessary to obtain flow characteristics for both situations.

For manual operation, annulus pressure is applied directly to the main valve piston. Above annulus pressures of about 7 psig, the flow data for manual operation closely follow a theoretical flow curve for an orifice whose area is equivalent to the wide-open main valve area (assuming a discharge coefficient of 0.610). The main valve (for manual operation) is wide open above 7 psig and flow varies with the square root of annulus pressure. As the annulus pressure drops below 7 psig, the main valve moves toward the seat, and the nozzle flow becomes a function of valve stroke as well as annulus pressure. For annulus pressures less than about 4 psig, there is not enough piston force to move the main valve. Manual fueling, therefore, is limited to annulus pressures greater than 4 psig.

For automatic fueling utilizing the fluidic circuit, the flow characteristics are also shown on the curve of Figure 4-36. In this case, nozzle flow is a function of annulus pressure, as before, but the valve stroke is determined by the differential output of the fluidic amplifier. This differential output is applied across the main valve piston as discussed earlier. The maximum value of this output is 50 percent of amplifier supply pressure. Due to losses in the manifolds and operating switch, the amplifier supply pressure can be as much as 2 psi below the annulus pressure. In the case of automatic fueling, therefore, the main valve piston pressure is not readily apparent from Figure 4-36.

Although there are two values of flow shown for some annulus pressures, this does not represent an unstable condition since the lower flows result from a smaller main valve area. However, since the annulus pressure can be related to valve stroke, it might be asked how two different valve strokes (areas) can be obtained for the

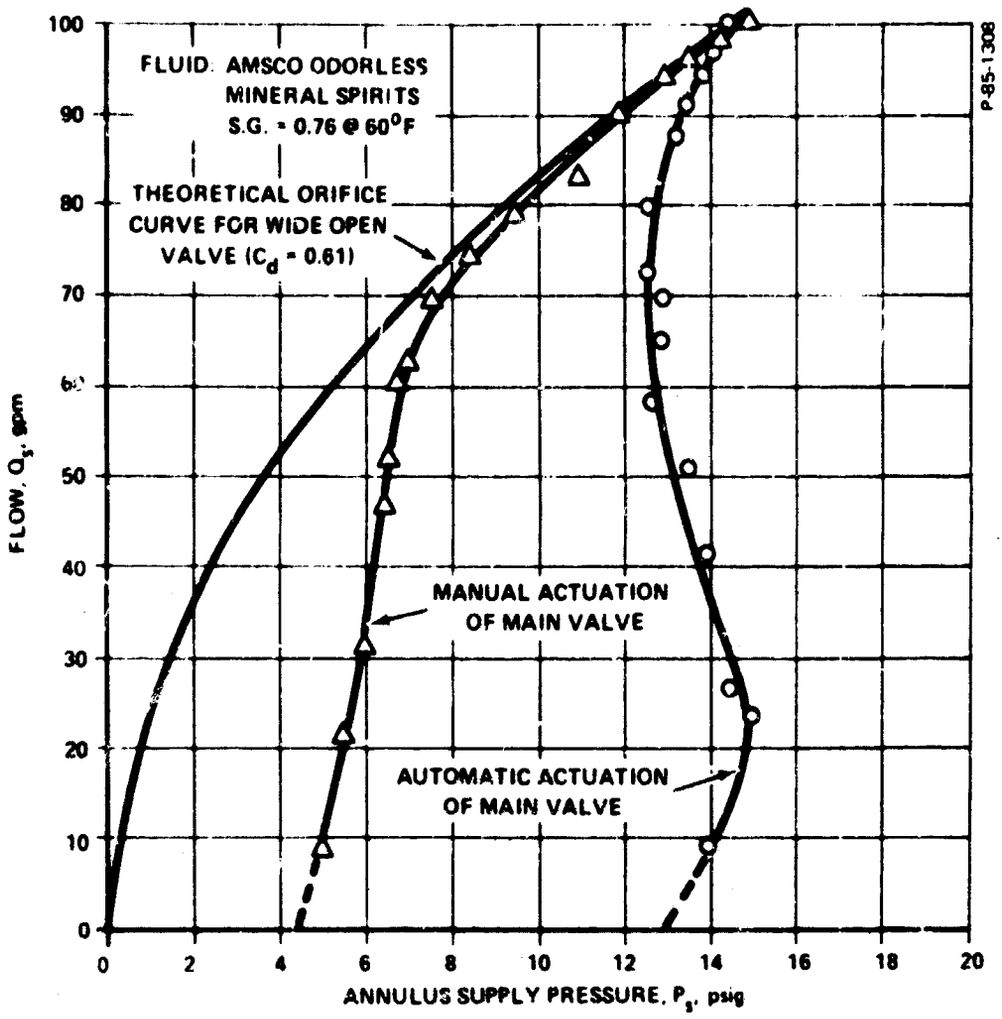

Figure 4-36 - Flow-Pressure Characteristics for Closed-Connect Refueling Nozzle

same value of annulus pressure. Two valve strokes result from identical annulus pressures because of the varying nature of the flow forces on the main valve. Apparently, at high flow rates (large valve strokes), the flow forces act to open the valve, while at low flow rates the flow forces tend to close the valve. Therefore, to maintain equilibrium at any valve position, the required piston pressure differential must vary accordingly.

In order to verify the above conclusion, the valve unbalance force was calculated. This unbalance force was assumed to be due entirely to flow phenomena and was determined by equating the opening and closing forces acting on the main valve piston. The following equation can be written for the summation of forces on the main valve:

$$A_p(\Delta P) - F_a = F_s + k_s X_p$$

where

ΔP = $(P_{valve} - P_{switch})$ or fluidic circuit output, psi

A_p = piston area, in^2

F_a = flow force, lb.

F_s = spring preload, lb.

k_s = spring rate, lb/in

X_p = piston stroke, in.

In the above equation, the unbalance force is assumed to be positive when acting to open the main valve. The spring preload was set at 5.1 pounds and the spring rate was 15.4 lb/in. The values of ΔP and X_p were determined from test data. The results of the calculations are shown in Figure 4-37, which indicates that the flow force does change direction as stroke is increased.

Evidently, at small strokes, Bernoulli forces predominate. These forces always tend to close the main valve poppet. At larger strokes, there apparently is a reaction force tending to open the main valve. This force results from a change in flow direction at the disc attached to the valve seat keeper. The calculation then verifies the flow data of Figure 4-36.

This completed the evaluation of the prototype closed-connect fueling device. The nozzle and the receptacle were then disassembled to photograph the major piece parts. These photos are shown in Figure 4-38 and 4-39 for the nozzle and the receptacle, respectively.

After reassembly, the device was retested to assure satisfactory operation. The total weight of the nozzle equipped with a 2-inch quick disconnect hose coupling is 9 pounds, 6 ounces. The nozzle weighs 8 pounds, 4 ounces without the coupling, and the receptacle weighs 3 pounds, 1 ounce.

4.3.8 Recommended Design Changes

4.3.8.1 Elimination of "Hydraulic Lock"

As discussed in subsection 4.3.7.6, when the nozzle is disconnected from the receptacle during fueling, fluid is trapped in the nozzle housing, preventing reconnection. To alleviate this, two possible solutions have been formulated, as indicated schematically in Figure 4-40.

Option "A" is simply a bleed orifice drilled through the sliding sleeve of the coupling. More than one orifice may be used and its size should be determined by the bleed time required. Fuel trapped

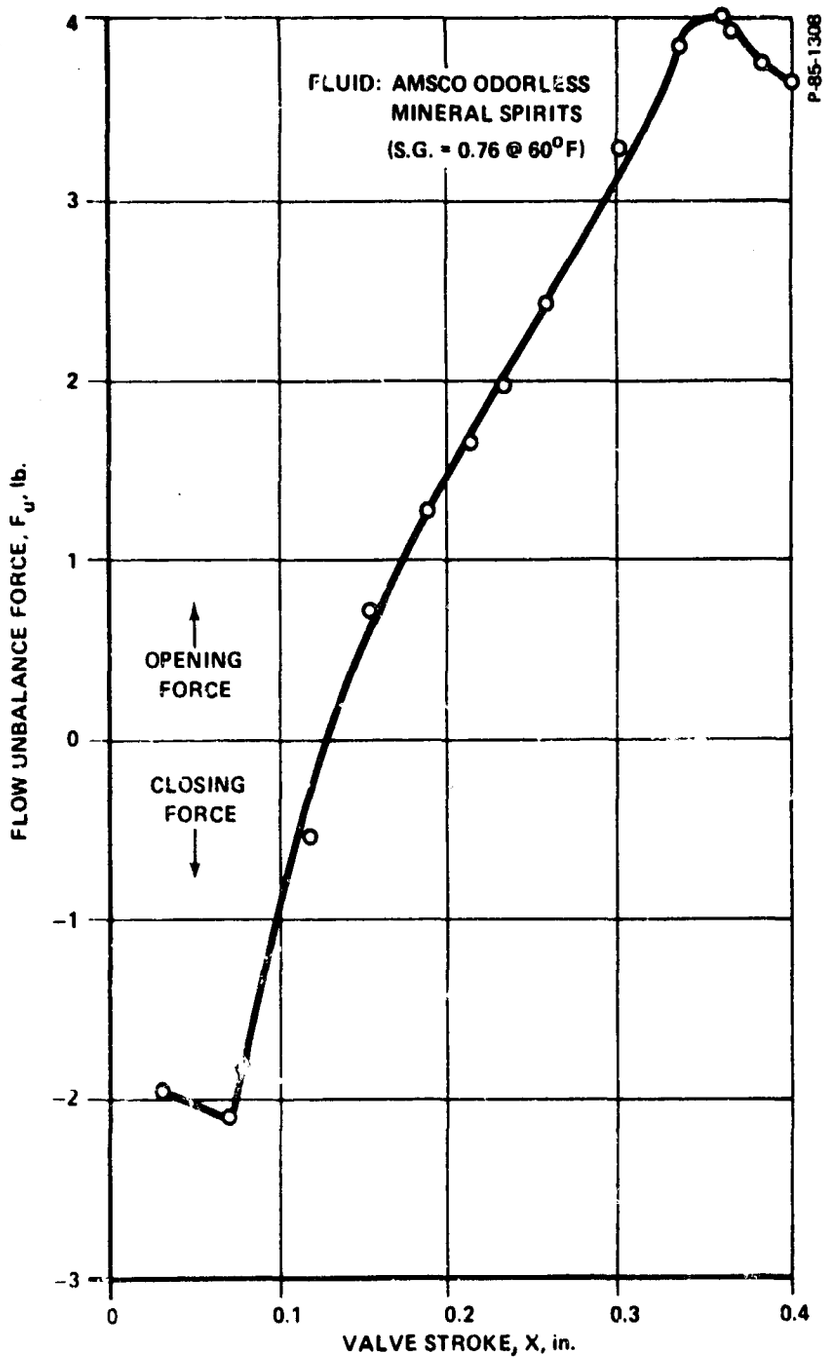

Figure 4-37 - Calculated Flow Force for Main Valve of Closed-Connect Fueling Nozzle

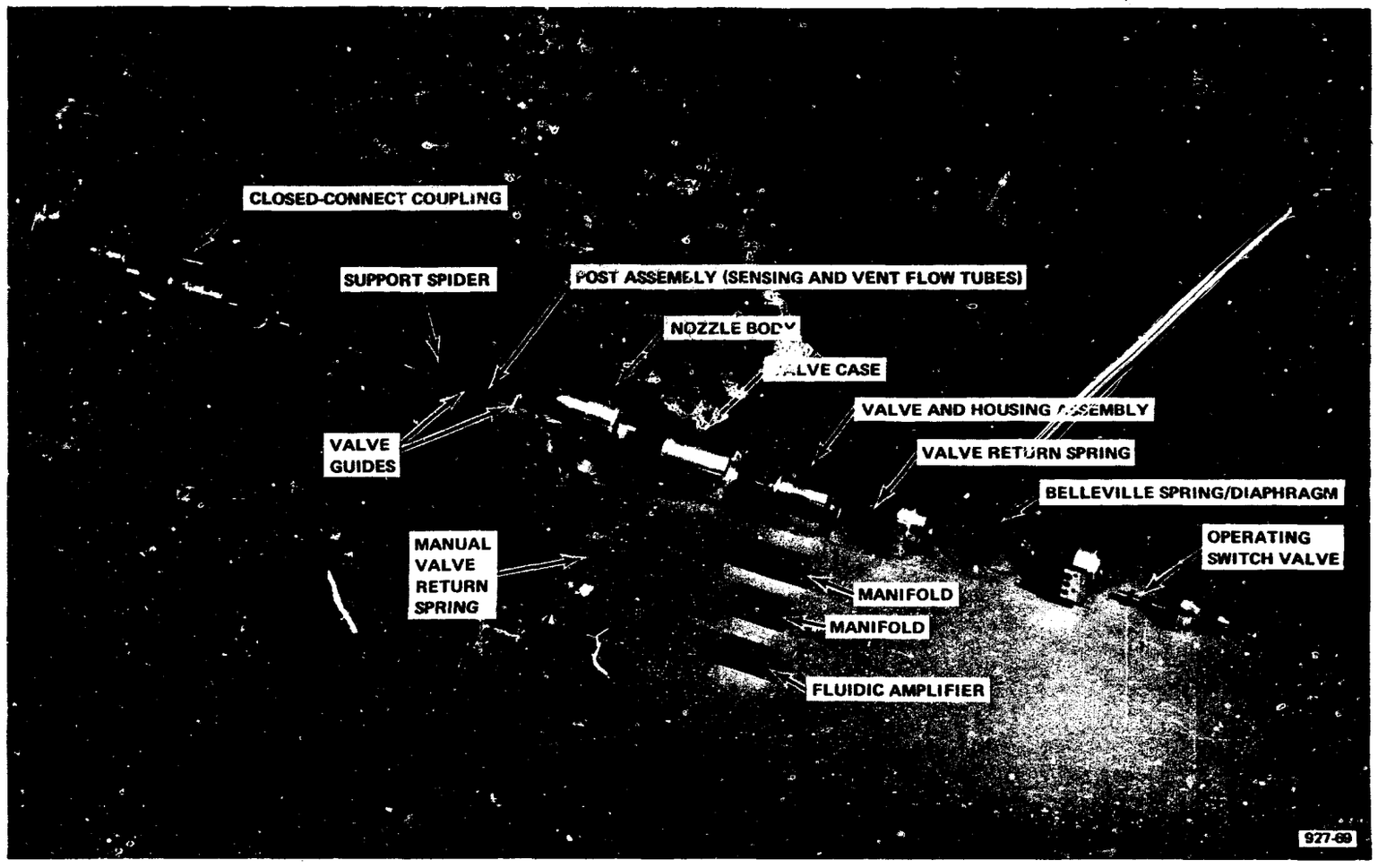

Figure 4-38 - Nozzle Parts

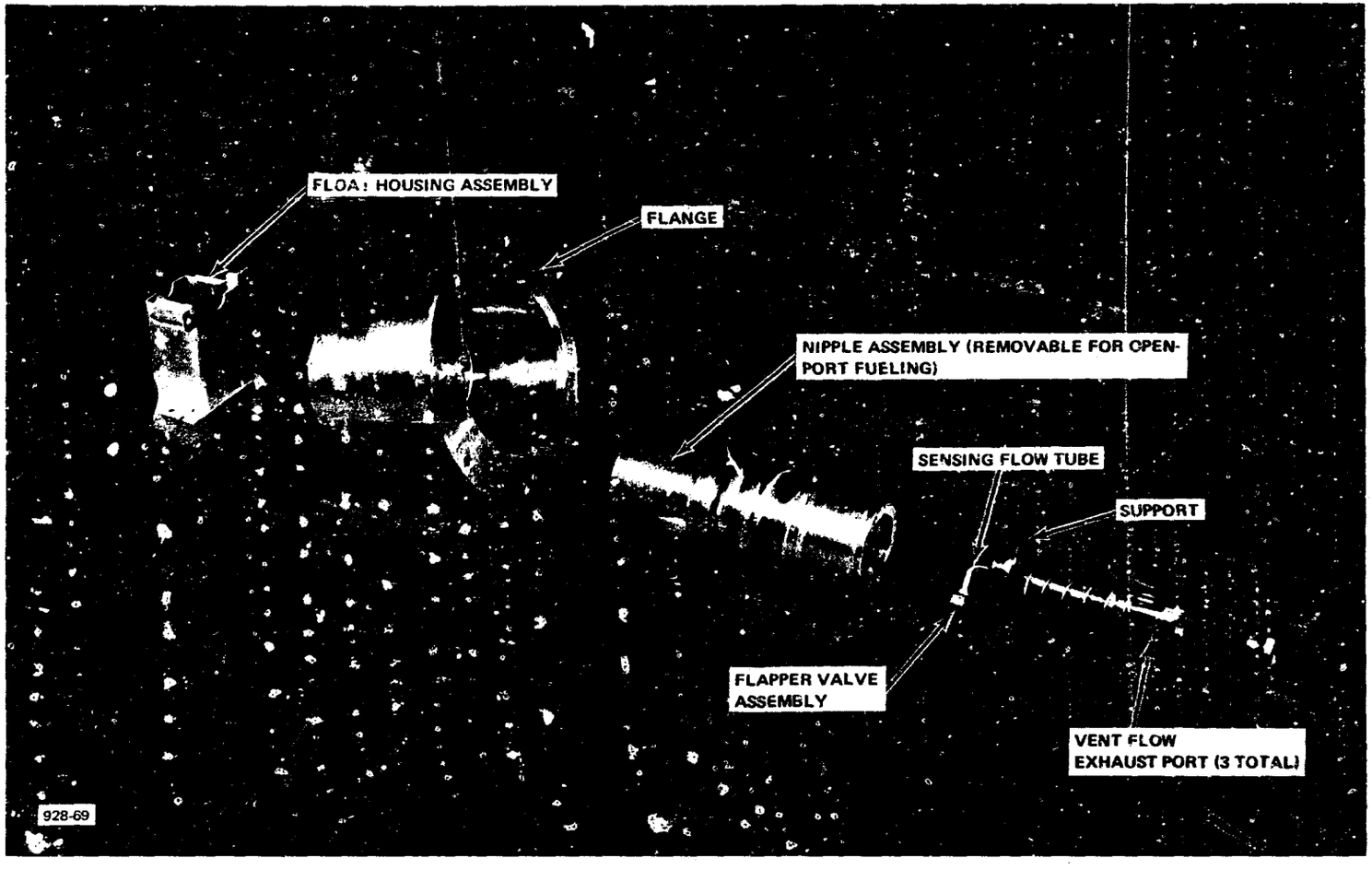

Figure 4-39 - Receiver Parts

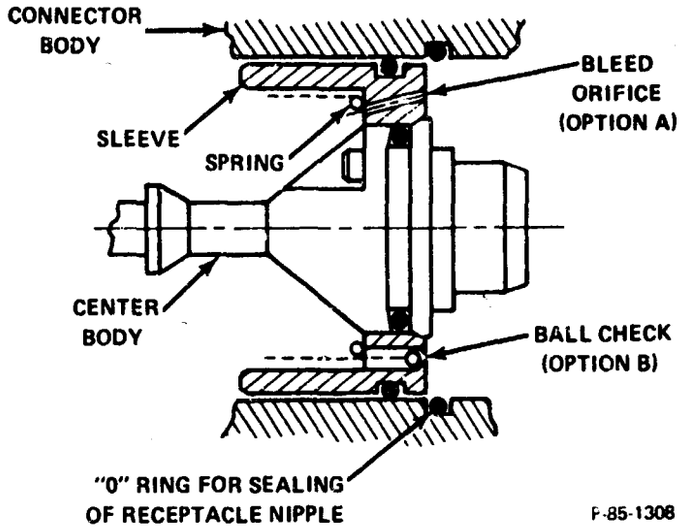

Figure 4-40 - Methods to Relieve Hydraulic Lock

behind the sleeve is, therefore, bled to atmosphere after removal of the nozzle from the receptacle. (All other flow paths have been blocked.) When the nozzle and receptacle are connected, the bleed orifice is sealed from atmosphere by the existing "O" rings in the sleeve and in the connector body. The latter "O" ring engages the receptacle nipple when connection is made.

The obvious disadvantage to the bleed orifice approach is the additional spillage, which is wasted fuel and could be a fire hazard.

Option B incorporates a small ball check valve in the sleeve. The ball protrudes from the front face of the sleeve and is held in place by the fuel pressure. When there is no fuel pressure behind the sleeve, the ball is retained in the hole by the sleeve return spring. When the nozzle and receptacle are mated, the ball is pushed back allowing the fuel to bleed into the main flow passage. Since the trapped fuel is compressed by the sleeve motion, connection time is determined by how fast the increased pressure can be bled. To minimize this time, more than one check valve may be required.

4.3.8.2 Rolling Diaphragm Seal Revision

During breadboard testing of the main valve, piston drag and hysteresis were reduced by elimination of two rolling diaphragm seals. Pressure reversals experienced during system operation were not large enough to cause reversals (and ultimate failure) of the diaphragms. The back-to-back arrangement shown on the assembly drawing (D 2172405), therefore, was not required. Although not incorporated in the delivered

prototype, it is possible to reduce the complexity and the number of piston housing parts. This should somewhat reduce the cost of the hardware. No decrease in overall length is achieved with this change since the required convolution space remains the same.

4.3.8.3 Increased Piston Force

The prototype nozzle required approximately two (2) pounds more seating force to effect leak tight valve closure than anticipated during the original design. The increase was primarily due to the seat redesign which was required to stabilize the valve. In order to open the valve, then, a higher piston differential pressure (amplifier output) was required. This, in turn, limited valve operation to higher annulus pressures than originally anticipated. In order to lower the minimum operating pressure in future designs, it might be well to consider ways of increasing the applied piston force. Additionally, the increased piston force may have a stabilizing effect during main valve closure.

With the available fluidic circuit output, the obvious way to increase piston force is to increase the piston area. Since it would be desirable to accomplish the area change without an increase in overall package size, the rolling diaphragm seal on the piston could not be used. Therefore, other dynamic sealing methods should be investigated. By properly applying an "O" ring piston seal to the dry-break main valve, for instance, quite a large piston could be utilized in the same package. Such a seal was investigated early in the present program, but when zero leakage was accomplished, breakout friction was intolerable. Some tests were run with Teflon-coated seals and with various "O" ring squeezes, but time limitations prevented a comprehensive survey of all the aspects of the problem. The fixture used for these tests provided order of magnitude data for the seals, but did not completely simulate the final application. It is, therefore, recommended that before future closed-connect design activity is initiated, a development program be formulated to determine the optimum sealing method, seal type, and materials. When the sealing method has been finalized, the main valve piston can be redesigned.

SECTION 5

APPLICABILITY OF FLUIDICS TO CONTROL OF MILITARY FUEL HANDLING OPERATIONS

5.1 PIPELINE OPERATION INCLUDING PUMP STATION CONTROL AND PRESSURE REGULATION

5.1.1 Introduction and Requirements

Military operations today require enormous quantities of liquid hydrocarbon fuels to meet the demands of increased mobility. Vehicles are more sophisticated and use a variety of power plant types and fuels. The gas turbine is in extensive use and its relatively higher fuel consumption has added to the overall increase in military fuel requirements.

The present military fuel distribution system is hard-pressed to meet the demands of today's mobile Army and ways are sought to increase the effectiveness of the system.

The lifeline of tactical fuel distribution is the overland pipeline system stretching from the shoreline where POL is off-loaded from tankers to the furthermost reaches of the combat area.

The military fuel pipeline system is outwardly similar to commercial pipelines in this country in the sense that it perhaps is the only solution to large quantity transportation of POL over long distances. However, the similarity almost ends at that point. Commercial pipelines, of course, operate solely on the basis of long range lowest cost techniques and, as a result can afford to invest heavily in permanent capital equipment. Their pipelines are normally quite large, being up to 42 inches in diameter and are without known exception, buried for purposes of safety and asthetics. The military pipelines are seldom buried for obvious reasons and the pipe is much smaller. The standard sizes are 4, 6, 8 and 12 inches in diameter with the six-inch being the most commonly used.

The products transported are injected into the pipeline at the marine terminal and moved through the pipeline by pressure. As the fuel moves across country within the pipeline, the original pressure decays due to viscous losses and varies due to changes in terrain. Therefore, it is necessary to install pipeline pressure boosting and reducing stations at intervals determined by the terrain, the pump capacities and characteristics and the flow rate. There are two basic pressure considerations which help to determine where to place a booster pumping station. The pumps at the station must not be allowed to operate under suction conditions that induce cavitation. Therefore, the station must be located on the basis that the station inlet pressure will not normally drop below the

minimum allowable pump suction pressure. The other consideration is that the station discharge pressure must not be allowed to exceed a safe maximum in order to prevent any possibility of bursting the line. These considerations are essentially identical for commerical and military pipelines.

Commercial pipelines sometimes are only a few miles long but normally stretch over hundreds of miles. The Colonial pipeline is 1056 miles long and uses 27 pumping stations. This is an average spacing between stations of about 40 miles and is a typical distance. Military pipelines can also stretch over hundreds of miles and require similar numbers of pumping stations. The operation of a pipeline requires precise control and continuous monitoring of conditions within the line, the pump stations and the intermediate and pipehead storage facilities. Over the years it has proved economically feasible for commercial pipelines to introduce more and more automated facilities and continuously upgrade the sophistication of their operation. Today every commercial pipeline is automated more or less and many have reached a degree of sophistication in which, basically, one dispatcher can operate an extensive complex pipeline. This ultimate degree of automation has been made possible by the use of computers which can perform almost every monitoring and dispatching function. It should be noted, however, that there is not a universal agreement among these companies that computer controlled automated pipelines are proving to be economically sound. There is no disagreement as to the need for automation — it is only the inclusion of computerized operation that has not yet been accepted across the board.

Another very important difference between a commercial and a military pipeline operation is in the motive power used for pumping the petroleum products. The vast majority of commercial pump stations use electrical motor driven pumps which mostly operate the pump at constant speed. The reason for this is the easy accessibility to line electrical power and the simplified operational procedures associated with starts, stops and maintenance. On an automated pipeline, electrical pumping stations are seldom attended.

The military pipeline operation faces an entirely different situation. Line electrical power is seldom available, and even if it were, on a power/weight basis, electric motor drives are heavier than combustion engine drives for the power levels required in a pumping station. Today, air mobility is a key factor in the tactical posture of a field army and equipment weight has assumed considerable significance.

The military are also faced with the economical and practical aspects of dependence upon trained personnel for performance of critical and relatively complex functions. Operation of the pipeline pumping stations is one of the more demanding functions which now require trained personnel. If these stations could be automated to the degree that personnel requirements were reduced to one man per station or even to the point where only periodic maintenance visits were required, it is believed that the overall reliability and effectiveness of the pipeline could be substantially increased.

Automation would also reduce the level of training required of operating personnel. Partially offsetting this would be the need for specialists capable of maintaining the control systems. However, a properly designed control system will minimize the need for maintenance. Overall it can be expected that pipeline automation will result in reduced manpower requirements.

Today, the military does not operate any automated pipelines. However, in the next five to ten years it is probable that some of the pipeline functions will be automated to take advantage of the available technology and to meet the increasing demands upon POL distribution systems.

The degree to which the military pipeline operation eventually is automated will depend upon the results of studies to determine the overall advantages and probable costs. It is one objective of this study to determine the practicability of applying fluidic technology to control of pipeline operation.

Exclusive of the storage function which is discussed in a following section of this report, pipeline operation consists of three basic functions. These are: dispatching, pressure regulation and pump station control. The pressure regulation function includes techniques for maintaining safe pressure levels in the pipeline to prevent any possibility of operating the pumps under conditions that cause cavitation or of bursting the line due to excessive pressure. To this end it is sometimes necessary to include pressure reducing stations where the line proceeds on steep downhill grades.

In order to remain within the scope of the overall study, it was necessary to select one of the three basic pipeline functions to determine the practicability of applying fluidic control.

The dispatching function consists mostly of scheduling and monitoring. These can best be done using special or general purpose computers, and fluidic technology is normally not considered for computers unless environmental conditions rule out electronics. Since the dispatcher can be located in relatively secure areas and does not need to be in intimate contact with the POL products, electronic computers are the most logical selection. However, at this time the Army is not prepared to consider computerization of any type for the fuel handling operation. Thus, the dispatching function was not selected for study.

Pump station control includes some consideration of pressure regulation in the pipeline and necessarily includes many types of control, sensing and logic functions. For these reasons, automatic control of pumping stations was selected as representative of the requirements of automated pipeline operation.

The requirements for pump station control include the control of the station inlet and outlet pressures, provision for automatic startup and shutdown, overload protection and readout of critical parameters. It was also desired that the fluid being pumped within the pipeline be

considered for the power supply to the control system and as a means for starting the pump prime movers.

Because of the remoteness of the dispatcher to the pumping stations, his initiating signals and the station parameter intelligence must be transmitted via radio, telegraph or microwave. This is even true today where manual pump station control is used. As regards an automatic station control system, the actual transmission technique is unimportant. The fact that it is necessary simply indicates that an interfacing requirement exists between the station and the dispatcher.

5.1.2 Operational Considerations

5.1.2.1 Fluidic Control Power Supply

Any control system, whether electrical, electronic, hydromechanical, or fluidic requires an Auxiliary Power Supply (APU). The power supply can consist of an energy storage unit, a generator, a regulator, conditioning equipment and, in some instances, a sink or reservoir.

Power is required at two basic levels: low level for the logic functions and sensing, and a higher level for actuation of valves, etc.

It does not seem practical to assume that the power supply would be continuously in a state to deliver the higher power levels necessary to begin putting a station on line. Therefore, some form of standby power is required which can furnish a low power signal to the APU control in order to start it so that the total power requirements can then be supplied.

Since an initiating signal from a remote dispatching point will have the form of a teletype, or radio signal, the standby power must be electrical or electronic in form. Similarly, data from the pump station must be converted into electrical form for transmission to the dispatcher.

A requirement for electrical power for standby purposes may raise the question — why use other than electrical power for the remainder of the control? There are at least two good reasons why other technologies should be considered. First, electrical power poses a fire hazard at the voltage levels required to operate valves, and the valve operator size and weight can be a disadvantage. Second, minimizing the amount of electronics reduces the vulnerability of the control to electromagnetic radiation damage and to extreme environmental conditions.

Where fluidic control is being considered, there are three potential sources for the power supply: (1) the hydraulic power in the pipeline itself, (2) a separate hydraulic power supply, or (3) a separate pneumatic power supply. Three considerations must be made regarding using the hydraulic power in the line.

First, there may not be any power available when it is needed. The reciprocating engines presently used require a fifteen minute warmup period, and the station control system cannot begin to function until the line pressure begins to rise; thus, there would be an intolerable delay before the station could go on line.

It should be mentioned here that eventually gas turbines will probably replace the reciprocating engine as pump prime movers. One helpful characteristic of the gas turbine is its ability to operate at full power without warm-up. Thus, this objection to use of the hydraulic power in the pipeline would no longer apply.

The second consideration is the need for an elaborate control to provide a sink or reference pressure for the vent flow from the fluidic control amplifiers. Prior to the time when the station begins to add head to the line flow, there would be a pressure drop across the station with the high pressure on the inlet side. Once on the line, the ΔP would reverse. Therefore, the polarity for the inlet and outlet pressures for the control would have to reverse.

The third consideration is related to operation of fluidic amplifiers at low Reynolds Numbers. There are no firm data available at this time which can be used to state with assurance what is the lower limit of Reynolds Number. A control system such as will be discussed here uses wall-attachment amplifiers almost exclusively. This type of amplifier depends upon turbulent flow conditions for the Coanda effect which causes the power jet attachment to the channel wall. (proportional amplifiers appear to become gain sensitive at the lower Reynolds Number).

The fuels usually transported in military pipelines include avaition gasoline (av gas), motor gasoline (mo gas), jet fuel (JP-4), kerosene, and diesel fuel. Temperature can get as low as -40°F where the kinematic viscosity of diesel fuel reaches 50 centistrokes and the specific gravity is about 0.93. Table 5-1 lists the extreme temperature characteristics of these fuels.

The Reynolds Number is expressed as:

$$N_R = \frac{\rho V D_e}{\mu}$$

where

ρ = fluid density

V = characteristic velocity

D_e = equivalent diameter

Table 5-1 - Extreme Temperature Properties* of Military Fuels

TEMPERATURE	-40°F		+120°F	
FUEL	SP. GR.	ABS. VIS.	SP. GR.	ABS. VIS.
AVIATION GASOLINE	0.75	1.4 cs	0.67	≈0.5 cs
MOTOR GASOLINE	0.77	7	0.70	1.05
JP-4	0.82	3.8	0.76	0.8
KEROSENE	0.86	15	0.81	1.3
JP-5	0.87	20	0.82	1.5
DIESEL FUEL	0.93	50	0.88	2

*THE LEE COMPANY

μ = dynamic viscosity

ν = kinematic viscosity

Examination of this expression reveals that the Reynolds Number varies inversely with kinematic viscosity. Also, N_R can be increased by raising the supply pressure to increase the characteristic velocity and by increasing the equivalent diameter. Normally, fluidic amplifiers are constructed in two dimensional form. The equivalent diameter refers to the power supply nozzle which means that N_R can be maintained high by using larger amplifiers.

If a fluidic amplifier with a 0.02 inch x 0.04 inch power nozzle were operated at a ΔP of 10 psi on 50 cs diesel fuel, the Reynolds Number would be 165. This is below the usual definition of the laminar/turbulent transition Reynolds Number of 1000 and could be expected to result in erratic amplifier operation. In order to raise N_R for this amplifier to 100, the ΔP would have to be about 375 psi.

Bendix Research Laboratories has been performing a corporate funded investigation of hydraulically powered fluidic amplifier configurations. This program is expected to yield optimum amplifier designs for hydraulic operation, and one of the objectives is to lower the minimum operating Reynolds Number. Nevertheless, until such time as reliable operation of wall attachment amplifiers at low N_R can be shown, the conclusion is that the fluid in the pipeline could not be used to power the fluidic pump station control.

Elimination of the choice of using the fluid in the pipeline as the power source for fluidic control leaves us with the choice of either an auxiliary pneumatic or hydraulic power supply. By this, it is meant that the power, either hydraulic or pneumatic, would be developed by some form of APU which would probably be a gasoline engine powered compressor or pump. An accurate selection of which of these two approaches is the best would have to be determined through a comprehensive tradeoff study which would consider all of the ramifications of both approaches. For the purposes of this study, which is limited in scope, we will show in the following paragraphs some considerations which lead us to a selection of a pneumatic supply for the logic circuit and a hydraulic supply for the high powered or valve operated circuits. As regards the prime mover for the compressor and pump, it was considered possible that the station prime movers, the ones that drive the main pumps, could be utilized to furnish this auxiliary power. However, there are normally four pumps available at each station, but only three are operated at any time. Therefore, it would be necessary to have a power supply drive on each pump prime mover because the pumps are alternated to equalize their usage. This means that some form of load sharing network would be required to select one of the three available power supply sources and this would probably be selected on the basis of equal usage also. The obvious problem with this approach is that a certain amount of sequencing and preparation has to be accomplished before the pump prime movers can be started which leaves no means by which power for the fluidic logic circuit could be generated until that time.

In consideration of the above items and the probable complexity of a circuit that would be able to select one of the three available power supply drives, it is concluded that a separate auxiliary engine for the fluidic control power supply probably offers the simplest approach. This would also eliminate any need for storage of pressurized working fluid because the dispatcher initiating signal which comes into the pump station as an indication of the desire to put the station on the line could energize a relay which would start the APU. The relay, being electrical, could easily draw its power from any one or all of the batteries which are available to start the main pump prime movers.

Pneumatic power is selected for the logic circuit for several reasons. The first reason is basically because the majority of experience with fluidic circuits to date has been with pneumatic power. The second reason is that there are certain logic functions which are more easily performed using pneumatic power than hydraulic power. In fact, some logic functions cannot be performed using hydraulic fluid as the power source. Low pressure air can be supplied for a logic circuit using a relatively simple vane type air compressor or even a centrifugal compressor. In either case, the problems associated with higher pressure compressors, such as after-coolers and lubrication of the compressor are eliminated. With the vane compressor there may be some concern with the carbon particle wear of the vanes contaminating the amplifiers. With the centrifugal compressor there should be no problem at all with any contaminants from

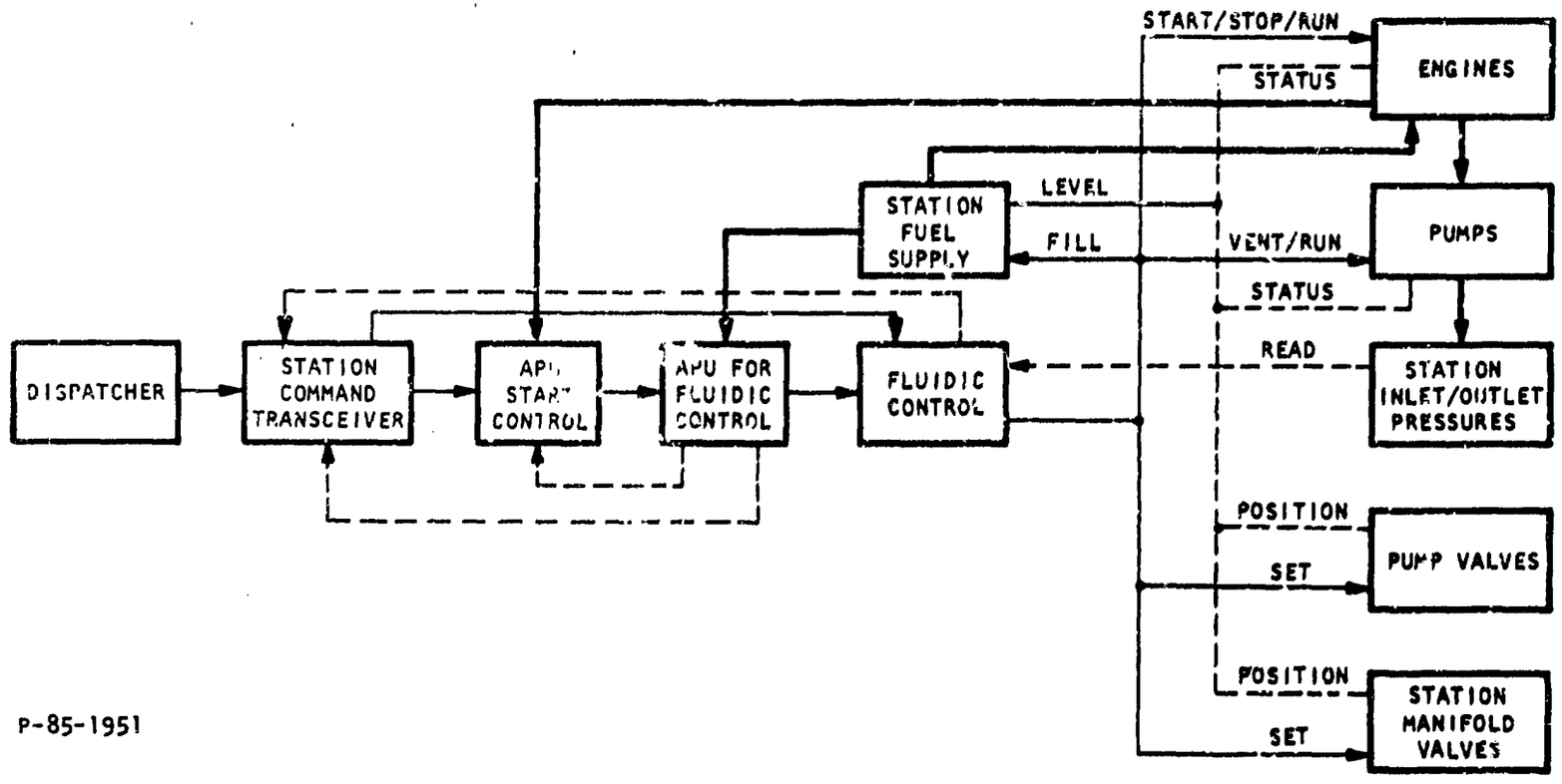

Figure 5-1 - Pump Station Control Block Diagram

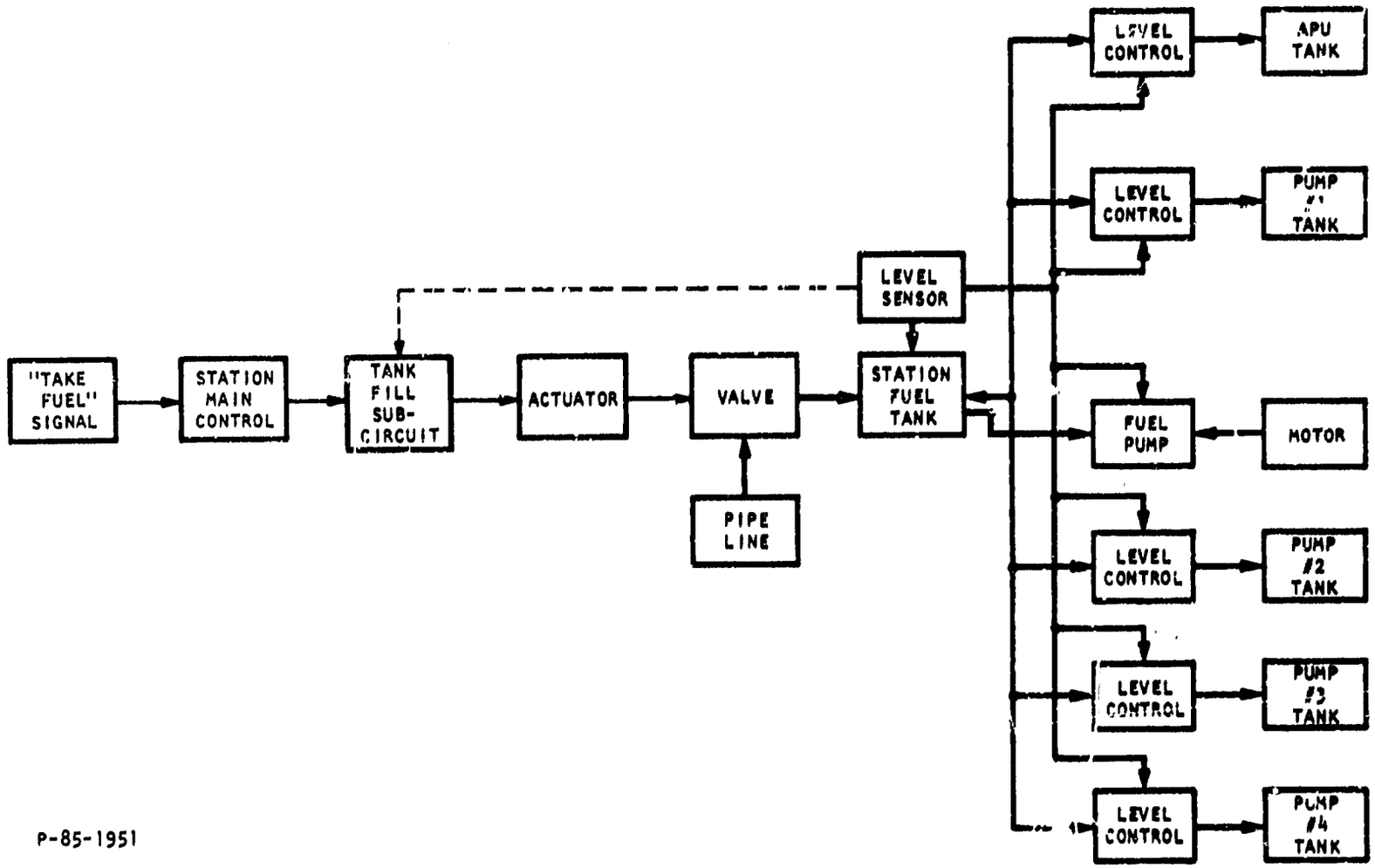

Figure 5-2 - Pump Station Fuel Supply Control

the compressor. In either case, there certainly would be a need to filter the inlet air to the compressor.

Hydraulic power was selected for the high power portion of the pump station control; that is, for powering the valve operators that control the valves in the main line. The obvious reason for selection of hydraulic power is the fact that the operator size can be greatly reduced by using high pressure fluid. Even though the valve sizes and line sizes used by the army are normally only six or eight inches in diameter, it may still require as much as 4,000 pounds of seating thrust to seal an eight inch valve against a 1,000 psi pressure. This is based upon information obtained from the Crane Company in Chicago, Illinois. A piston/cylinder actuator for an eight-inch valve would require a nine inch stroke and if it were powered using a 100 psi pressure source, it would have an eight inch bore, a 3 inch diameter piston, displace 338 in^3 and weigh about 125 pounds. By going to a hydraulic pressure of 1,000 psi, the total displacement volume can be reduced to 37 cubic inches, the bore diameter can be reduced to 2.5 inches and the weight can be reduced to 15 pounds.

5.1.2.2 Pipeline Control Mode

Several methods are available for control of the pipeline flow including: throttling of the flow by regulating valves in the main line, fluid drives between the prime mover and the pump where the prime mover speed is constant (such as an electric motor), or variable prime mover speed. The latter two methods are more economical in that little or no power dissipation takes place. Even so, throttling is used extensively in commercial pipelines, primarily because constant speed electric motors are used almost exclusively.

Since Army pump stations use internal combustion engine prime movers, it is logical to consider varying their speed to control pipeline pressure or flow rate. This probably results in more complex control circuitry, but should also result in more efficient pipeline operation. After considering the above modes of operation, it was concluded that the most practical approach was to control the pipeline flow rate by varying the pump speeds since it is necessary anyway to do a certain amount of pump speed control in order to provide protection against engine overspeed and allow for engine warm-up at idle.

The technique by which control of the pump prime movers is accomplished is explained in more detail in paragraph 5.1.4.

5.1.2.3 Station Fuel Supply Control

At this point, it may be well to present an overall block diagram of the pump station control. This is shown in Figure 5-1. It should be noted that one of the blocks refers to the station fuel supply. This is the source of fuel for the engines that drive the pumps. If the pipeline pump station is to be unattended, then it is

necessary that an automatic technique be provided for keeping an adequate supply of fuel in the reservoir for each pump prime mover and the station fuel reservoir. This, then, itself requires some form of control. The fuel for the pipeline pump station prime movers is normally drawn from the pipeline when the required type of fuel is passing through the station. It is a fairly simple matter to include provision for taking fuel from the pipeline upon the command of the dispatcher or possibly by manual actuation. The fuel taken from the pipeline is directed to a station fuel tank from which the individual tanks for each pump prime mover are replenished. In the simplest form of control, the station fuel tank could be located so that the pump prime mover tanks are kept at equal level with the station fuel tank simply by gravity. It only remains then to control the level of the fuel in the station fuel tank.

If the station fuel tank cannot be so located that the prime mover tanks are replenished by gravity flow from the station fuel tank, then it is possible to use a fluidic level control which would maintain each prime mover tank in a full condition. An alternate fluidic approach could be used to hold the level in the prime mover tanks between predetermined limits. The overall schematic arrangement for a complete control of the fuel tanks is shown in Figure 5-2.

A fluidic level sensor and control has been devised which can be used to either maintain the fuel in a tank at essentially a constant level or, by combining two sensors in a circuit can be used to maintain the tank level between limits.

The circuit uses a monostable version of the basic bistable jet-on-jet amplifier shown in Figure 5-3. Operation of these fluidic devices was discussed earlier in Section 4.3.1.1.

Figure 5-4 shows the fluidic circuit for sensing fuel level in a tank. The hash marks along one of the output legs of each amplifier indicate that the amplifier has "memory" in that output.

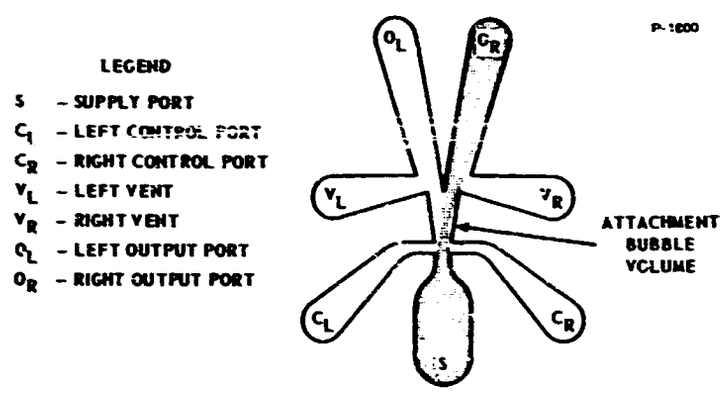

Figure 5-3 - Bistable Fluid Amplifier

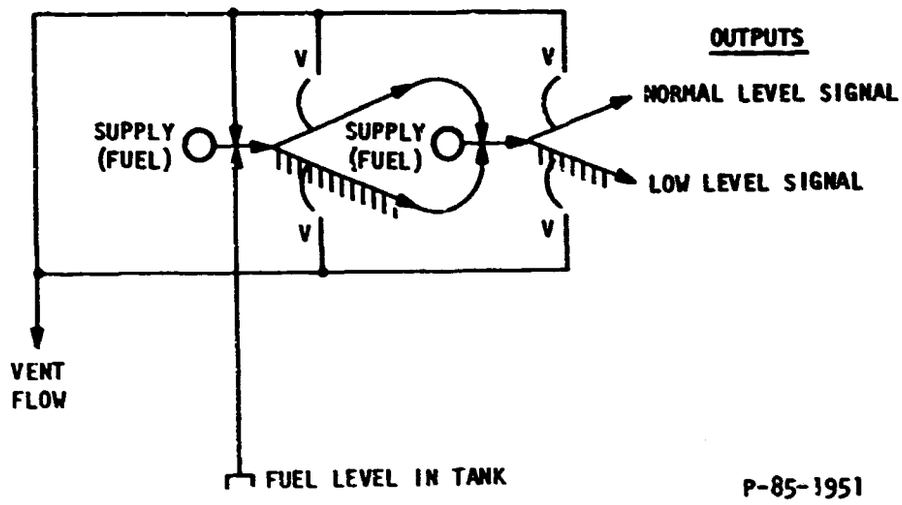

Figure 5-4 - Fluidic Level Sensor

That is, it is monostable and will always produce an output from the memory leg in the absence of any control signal.

The first amplifier of the sensor can be physically located in the fuel tank so that the control port is positioned at the desired fuel level. Alternately, the amplifier can be remotely located and a line can be connected to the control port with the other end positioned at the desired fuel level.

If the two amplifiers are supplied with fuel and the control port of the first amplifier is allowed to aspirate air, the memory phenomenon of the first amplifier is destroyed and its supply flow will split approximately between the two output legs rather than flowing only from the memory leg. By connecting both outputs of the first amplifier to the control and bias ports of the second amplifier, this amplifier behaves as though it were immersed in fuel; that is, it operates normally and all of its output is from its memory leg.

When the control port of the first amplifier is immersed in fuel, this amplifier behaves normally with its entire output from its memory leg. This produces a strong control signal on the second amplifier with a simultaneous loss of the partial bias signal. The result is that the second amplifier switches.

Thus, a digital signal is provided which indicates that the fuel level is either above the desired level or below it. All of the vent flows and the bias port of the first amplifier can be connected together and referenced according to how the sensor is to be used. This will be explained below for the two variations of how this level sensor circuit can be applied.

For the situation where the prime mover fuel tanks can be replenished with gravity flow from the station fuel tank, two of the fluidic level sensors described above can be combined into a control circuit that will provide a logic signal to the pump station control and/or to the dispatcher indicating that the station tank needs to be filled and also indicating when the tank is full. This circuit is shown schematically in Figure 5-5.

The amplifiers are supplied by a small motor-driven or prime mover driven pump, drawing the supply fluid directly from the station fuel tank. The vent flow and any unused output flows are allowed to return directly to the tank. This circuit only provides intelligence to the station control about the level of fuel in the tank. Referring back to the schematic of the pump station fuel supply control (Figure 5-2), it will be noted that the action to take fuel from the pipeline is predicated upon information from the station tank level control that the fuel level is low plus information that the proper type of fuel is passing through the pipeline.

The two fluidic level sensor circuits that combine to form the station fuel tank level control are labeled A and B in Figure 5-5.

It will be noted by the connections of the two individual level sensor circuits that when circuit A and circuit B are both aspirating air, that is, when the tank level is below even the lowest of the two control ports, the output of the bistable amplifier is from the Fill leg. This signal can be used both to inform the dispatcher of the need to fill the station fuel tank and as the first of a series of signals to begin to automatically fill the tank. The other signal or signals required would be those indicating that the proper fuel is passing through the pipeline at that time. When filling action is initiated and the tank begins to be filled, the control port on level sensor A will shortly be immersed in fuel. However, even though this circuit switches, there is no net effect on the bistable. The tank continues to fill until the level of fuel reaches the control port of the sensing amplifier of sensor B. When this occurs, that circuit switches and switches the bistable to provide a full signal, which then stops the filling action. The size of the amplifiers and the supply pressure for this sensor circuit only has to be based on considerations of contamination and fuel pumping power.

The basic fluidic level sensor shown previously in Figure 5-4 can also be used to maintain a nearly constant level in each prime mover fuel tank.

In this case, each liquid level sensor circuit would not only sense the level of the fuel in the prime mover tank, but the switching action would also be arranged so that the low-level output would be used to keep the tank full. The amplifier vent flows and the unused output flow would be collected and returned to the station fuel

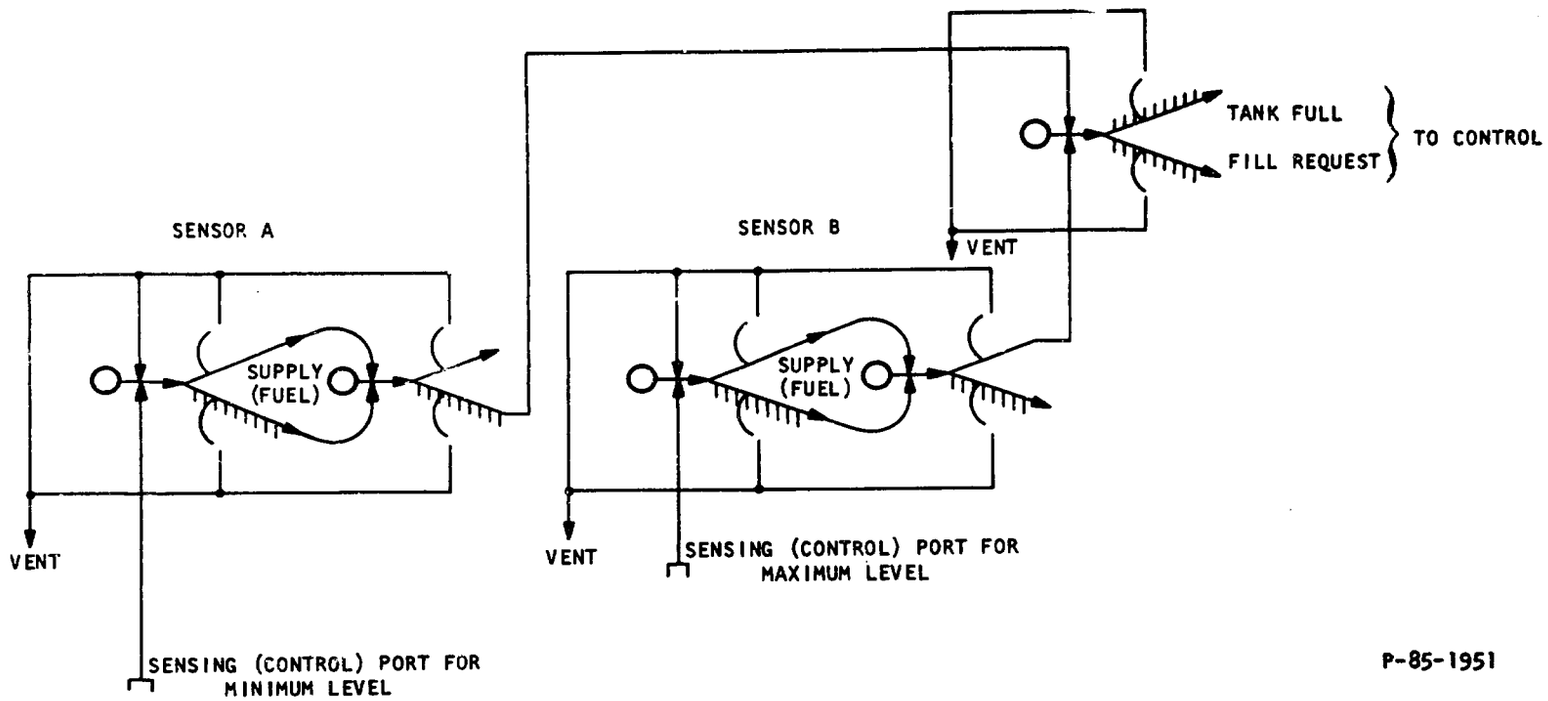

Figure 5-5 - Station Fuel Tank Level Control Sensor

tank. The power supply for each prime mover level control would be furnished from the fuel pump described earlier. The fluidic level control circuits would be in operation continuously. They would perform in a manner such that the prime mover tanks would always remain at the same level. This would result from the fact that the amplifiers would be continuously switching back and forth as they go from aspiration of liquid to aspiration of air. In any technology except fluidics, this would not be a desirable situation because of the obvious eventual wear of any part that would be required to operate in such an oscillatory manner. However, with fluidics there is absolutely no reason why such a circuit cannot be used. If, for some reason this type of operation is not felt to be desirable, then each prime mover fuel tank could be equipped with a tank level sensor circuit similar to that used in the station fuel supply tank.

5.1.2.4 Start-up and Shut-down Procedures

In the present military pipeline system, operation of the pump stations is entirely manual. Before a pump station can be put on line or taken off the line, there are certain procedures necessary to be followed. In order to stay within the scope of the present study, the automatic sequencing system was modeled primarily after the procedures used in the present manual system. Part of the manual procedure for preparing the station to go on line includes performing maintenance on the engines and pumps. It is recognized that maintenance can be performed automatically as well as manually; however, no attempt was made in this study to include automatic procedures for performing these maintenance operations. In the event that further consideration is given to automation of military pump stations, a much more comprehensive implementation of automatic control would be performed and this would include those necessary maintenance items which are now performed manually. It is the purpose of this study to show how fluidics can be used in automatic control of military fuel handling operations. It is not the purpose to fully develop an automatic pump station control system at this time. Therefore, the following discussions of the automatic control system include only those more obvious requirements for automatic control of the station and in several cases have ommitted peripheral or secondary functions. In most cases these functions probably can be implemented using fluidics.

In any pipeline system, it is desirable to keep the line packed when the system is shut down for any reason. In combat zones, such as Viet Nam, the line is frequently shut down at night because security cannot be maintained. When the line is shut down, each station discharge and suction valve is closed. Figure 5-6 shows a typical military pipeline pumping station schematically. The station discharge and suction valves referred to are those at the station inlet on the upstream side and the discharge on the downstream side. In addition, each pump has its own suction and discharge valve which are normally kept closed when the pump itself is shut down or when the entire station is shut down. It will be noted from the schematic of the pump station, that there are other

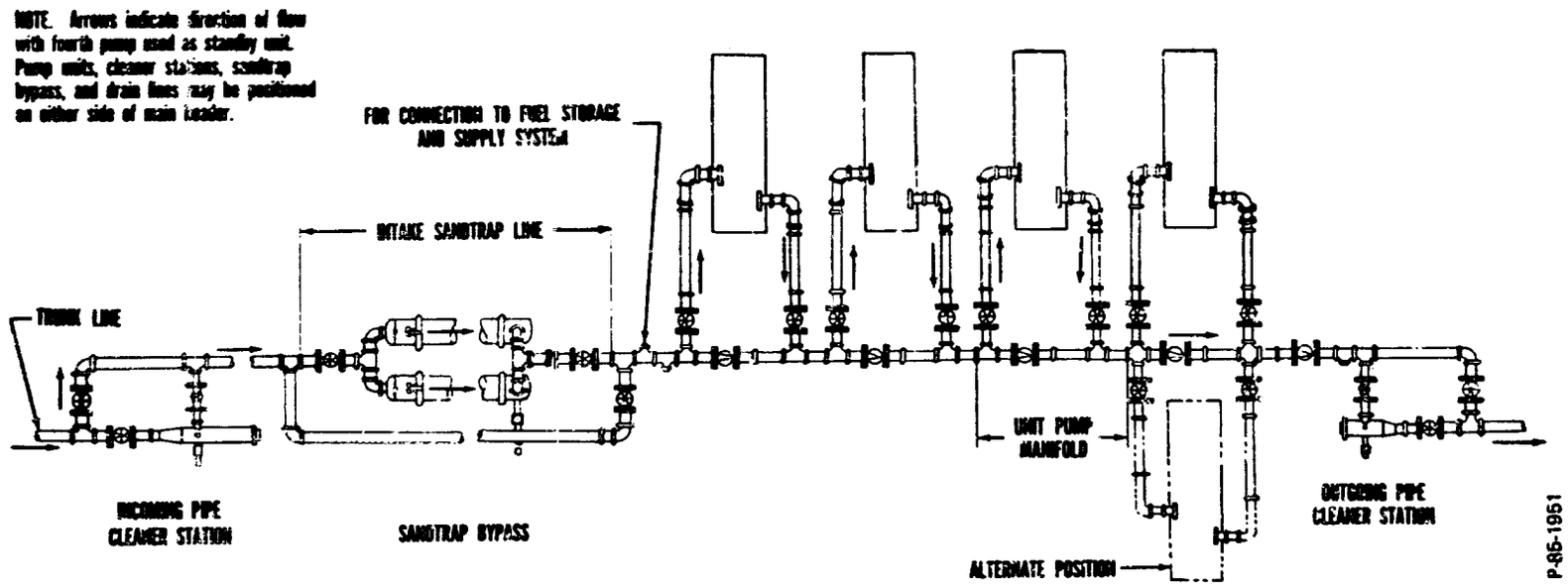

Figure 5-6 - Military Pumping Station

manifolding arrangements. One example is a manifold provided to recieve and launch pipeline scrubbers or "pigs" as they are called. No attempt has been made in this study to automate the operation of receiving and launching the pipeline pigs. Therefore, the only valves which will be considered in the sequencing control are the various suction and discharge valves mentioned previously. The pumps are all centrifugal types and each pump case is equipped with what is called a vent on the top side of the pump case. The purpose of the vent valve is to allow flooding of the pump case before the pump prime movers are started.

Referring again to Figure 5-6, it is noted that there are four pumps available and it will be recalled that normally only three pumps are used at any time. Therefore, when a pump station is about to be put on the line it is necessary to determine which three pumps will be used. This selection is normally made on the basis of providing equal usage of all the pump/engine combinations. For the purposes of this study, it is assumed that the pipeline dispatcher will keep track of the operating time accumulation on the engine pump combinations. Again, it is recognized that an automatic control system could perform this function.

The procedure for start-up of an automated pump station is assumed, for purposes of this study, to begin with the reception of an initiating signal from the dispatcher. This signal would be used to start the control system APU. Once the APU is started, the start-up automatically proceeds sequentially through logical steps. These steps include monitoring of certain engine functions, positioning of valves and finally, starting of the prime movers. Once they are started, the steady state pump control is in command and the pump speeds will be increased from idle as soon as the control senses a rise in station suction pressure. Normally the engines will be allowed to idle for about fifteen minutes before being required to increase speed.

Steady state operation simply consists of controlled variations in the pump speeds to maintain the station suction and discharge pressures within predetermined limits. The pump speed control is discussed in more detail in following paragraphs.

Normally, the pump station will be shut down by dispatcher request. If possible, the prime movers would be idled for about five minutes to avoid "dieseling" after ignition cutoff.

The pumps may also be brought to idle speed by the pipeline conditions. For example, if the discharge pressure continued to rise while the control reduced the pump speed, eventually the pumps would reach idle speed. The same action would occur for an abnormal decrease in suction pressure.

A comprehensive control system would include safety devices which would bring the engines to idle and perhaps even shut the engines down if damage were imminent. Low oil pressure or high oil temperature would be examples of this type of monitoring.

Thus, there are several ways in which a station may be taken off the line. Regardless of the reasons for idling the engines or shutting down the station, a logical procedure must be followed. For an automated pump station, a programmed shutdown sequencer is required similar to the start-up control. Because of this similarity, a shut-down sequencer control was not developed nor studied during this effort.

5.1.3 Pump Station Startup Sequence Control

In the following paragraphs, the pump station control will be described. It should be noted that at the time of this study no design existed for a military automatic pumping station startup control. Thus, in order to determine the applicability of fluidics to this type of control, it was first necessary to design the control to a degree amenable to the objectives of the study. The first step in the design procedure was to write a series of logic statements that adequately described the functions to be performed, these are presented in the next paragraph.

The logic statements and the resultant design are based upon the Pump Station Control Block Diagram shown previously in Figure 5-1.

Although the resultant control design could be implemented with either electronic or fluidic technology, it was developed with fluidic implementation in mind.

5.1.3.1 Logic Statements

The following statements describe the functions to be performed in starting the pump station, and indicate the sequence in which they are performed and the conditions that must be met.

Go "On-Line"

(a) APU Start - Sequence 1

- Start APU - initiated by dispatcher signal
- Detect required pneumatic regulated pressure
- Detect required hydraulic regulated pressure
- Uninhibit valve operator servo flow when regulated pressures are correct
- Furnish a signal to the next sequence indicating that the APU Start Sequence is complete

(b) Preparation - Sequence 2

- Start the sequence when the logic section is supplied with pressure and Sequence 1 is ready.
- Open the station suction valve when three of the four pumps have been selected and their respective oil levels are within limits.

- Close the station discharge valve
- Furnish a signal to Sequence 3(a) indicating that the Preparation Sequence is complete.

(c) Pre-Start - Sequence 3(a)

- Start the sequence when the logic section is supplied and Sequence 2 is ready.
- Open the suction valves for the selected pumps.
- Open the vent valves on the selected pumps when the suction valves have reached full open.
- Close the vent valves when a flooded pump case is detected.
- Open the discharge valves for the selected pumps when the pump vent valves are closed.
- Furnish signals to the individual start sub-circuits of Sequence 3(b) when and only when all three selected pump discharge valves are open.

(d) Start - Sequence 3(b)

- Energize the ignitions and starters for the three selected pumps to attempt a start.
- Time the start attempts and de-energize the starters and ignitions if a start is not detected within a pre-determined time.
- Provide a pre-determined timed delay period followed by a second attempt to start any engines that failed to start the first time.
- Allow for only three consecutive start attempts with delays between each attempt.
- Signal the dispatcher when any engine fails to start on the third attempt.
- Open the station discharge valve when and only when three engines are running.
- Provide an uninhibit signal to the On-Line control to allow engine/pump speed increase from idle to maintain line pressures as required.

5.1.3.2 Sequence 1 - APU Start

Figure 5-7 shows the block diagram for the APU and the logic used to bring it on line. The dispatcher initiating signal is converted to an electrical current and applied to electromagnetic relays used to energize the APU ignition and starter circuits. Power

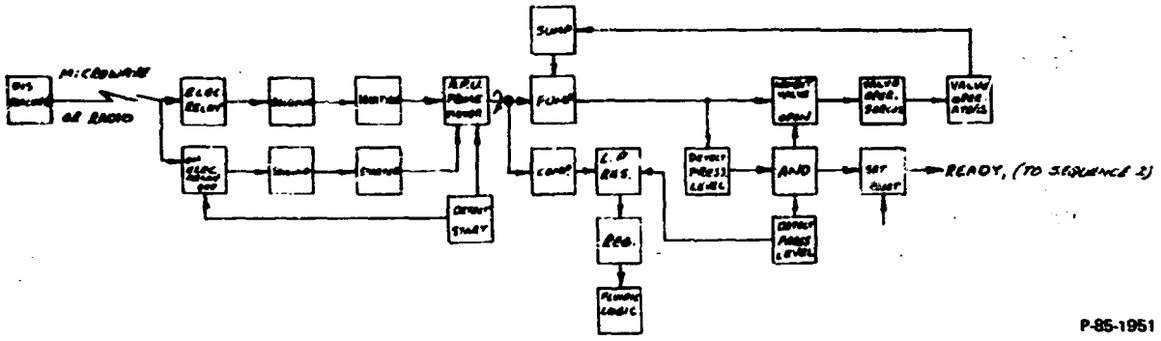

Figure 5-7 - Sequence No. 1 - APU Start

for the required transceiver, the relays and starter is assumed to originate from the batteries used to start the pump primer movers.

The APU design arrived at for this study consists primarily of a 12 horsepower (at rated speed) gasoline engine driving a 1.5 horsepower vane type oilless compressor which can continuously deliver 25 scfm of air at a pressure of 10 psig, and a 2 horsepower gear type hydraulic pump with a delivery capacity of 1.5 gpm at 1000 psig. These capacities have been calculated to be more than adequate to furnish the requirements of the overall control.

There are approximately 175 fluidic amplifiers used throughout the sequencers and the On-Line control. The flow requirements can be calculated for air from

$$Q = 1.23\ C_d\ A_o \frac{P_u}{\sqrt{T_u}}\ R\ C_2\ f_1 \left(\frac{P_d}{P_u}\right)$$

where

A_o = physical area of supply nozzle, in^2

C_2 = constant depending on the thermodynamic properties of gas, $(degree)^{1/2}/sec$ = 0.532 for air

C_d = orifice discharge coefficient, dimensionless, depends on orifice geometry = 0.9

P_d = downstream stagnation pressure, psia. This pressure measured where the gas velocity is very slow.

P_u = upstream stagnation pressure, psia. The pressure measured where the gas velocity is very slow.

T_u = upstream stagnation absolute temperature, degrees Rankine. The temperature where the gas velocity is very slow. Degrees Rankine = degrees Fahrenheit + 460.

R_o = universal gas constant = 640 lb_m-in/lb_f °R air air

Q = volume flow rate = scfm = standard volume flow, ft^3/min

f_1 = a tabulated value which is a function of the specific heat ratio of the gas, P_u and P_d.

Using a power nozzle with dimensions of 0.010 inch by 0.030 inch and an upstream pressure of 10 psig (about 25 psia), the flow requirement was calculated to be about 20 scfm. For purposes of comparison, an upstream pressure of 25 psig for power nozzles with dimensions of 0.020 inch by 0.020 inch would require about the same flow rate. The larger power nozzle dimensions would provide less dirt sensitivity and 5 psig supply pressure is a satisfactory supply pressure for logic operations. Actually, much lower pressures may also be considered when using air. However, where several interfaces are required, the higher pressure allows for smaller transducers, etc.

Based upon calculations of the cylinder sizes required for operating the pipeline valves, it was decided to base the design on the use of a hydraulic pressure of 1000 psig. The opening and closing times for the various station and pump valves are not required to be fast for a control mode where pipeline pressure is adjusted with pump speed rather than discharge valve position. Discussions with commercial pipeline operators disclosed that 30 to 60 seconds is an acceptable time for a valve to travel from one position to another.

Therefore, using piston/cylinder valve operators sized as described earlier in Section 5.1.2.1, and a travel time of 30 seconds, the total flow requirement for any given logic function would be a maximum of 1.0 gpm. This is based on having to open or close three eight-inch valves simultaneously.

The other APU principal components include a reservoir for the pressurized air, a sump for the hydraulic oil and pressure regulators for each fluid. In both cases, the pressure regulation requirements are not believed to be critical. For example, in the logic circuit, minor pressure variations are of no consequence because all of the operation is digital in nature. Even where an interface exists between the pneumatic logic and the valve operator servos (pilot stages), the action is simply a request for one or the other of two valve positions and variations in the signal pressure (above some minimum) will have no net effect. The hydraulic valve operator circuit probably requires

only a pressure relief valve to maintain a maximum safe pressure. In the steady-state on-line control, which will be explained later in detail, there are some proportional operations. However, push-pull circuitry is used throughout that portion of the control and the only probable effect of pressure level variations would be slight system gain changes. The entire fluidic portion of the control system uses jet-on-jet fluidic amplifiers which exhibit constant flow characteristics. This also greatly reduces the need for pressure regulation. The principal perturbation to system pressure will be ambient temperature variations if it is assumed that the APU engine is maintained at a constant governed speed.

The inhibit function in the APU Start sequencer serves the purpose of preventing transmission of uncontrolled valve operator signals from the servos while the control system pressure is below the minimum normal values.

Operation of the functional blocks will be explained in Section 5.1.5.

5.1.3.3 Preparation - Sequence 2

Four principal operations are performed during this sequence as can be noted from Figure 5-8 which shows the sequencer design in block diagram form. The operations include: reception of the dispatcher's signals selecting the three pumps to be used; performance of critical engine pre-start conditional checks; opening of the station suction valve and closing of the station discharge valve.

This sequence begins when the amplifiers are supplied and the Ready 1 signal is received from Sequence 1 indicating that sequence to be complete. A logical AND element is used to perform this first function. It is shown under the column labeled 1 which is provided in the figure to aid the discussion. Operation of this element and others is described in Appendix B. Basically, an output will come from an AND element when and only when all inputs are present. Similarly, the AND elements under column 2 will continue the sequence by providing outputs when the three inputs shown are present. In this case, as in most other operations throughout the sequence, one of the inputs is the output from the previous logic element.

One of the inputs to the column 2 AND's is an indication of engine oil level. A sensor for developing this signal will be described later. It should be mentioned that there may be several other important checks which should be performed. For this study, only one was shown for illustrative purposes.

The next operation performed by the sequencer is to open the station suction valve. This is to be done only when the three selected engines have been found to be in condition to run. Because there are four engine/pump units and only three are used, a logic circuit was inserted to provide a signal to open the station suction valve when any combination of three pumps have been selected and found to be in

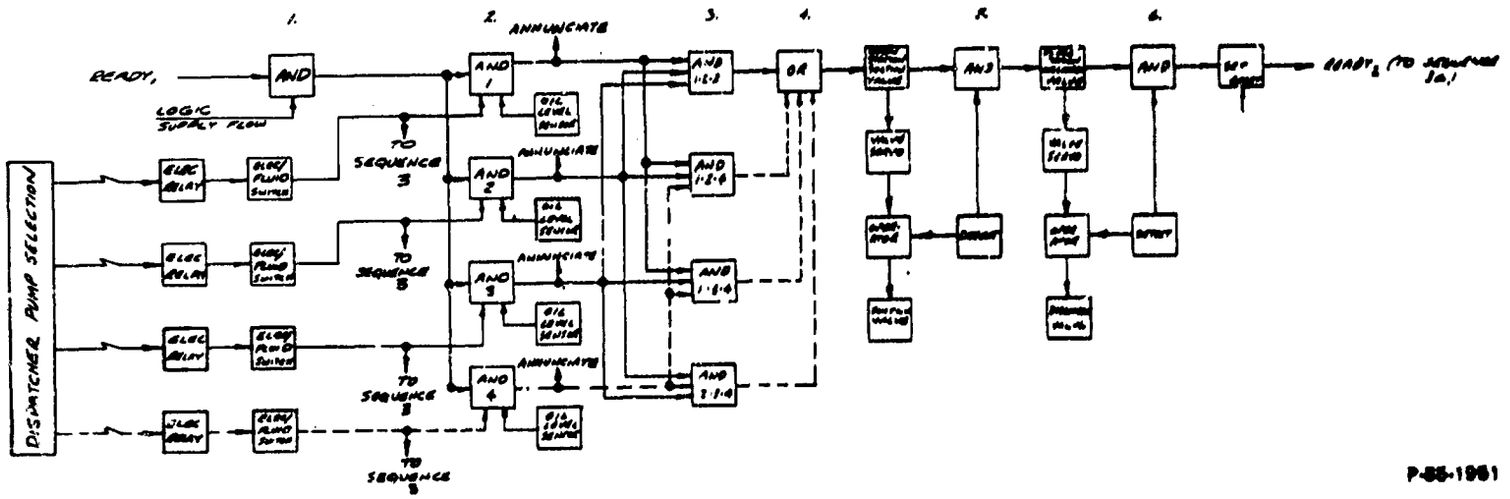

Figure 5-8 - Sequence No. 2 - Preparation

condition to run. This logic function is performed with the AND elements under column 3 and the OR element of column 4. Each AND will have an output when and only when all three of the pump numbers shown in its respective block are ready to run.

In the figure and for this discussion, pumps 1, 2, and 3 were selected as indicated by the solid lines connecting the sequence blocks. Thus, after being found in condition to operate, an output occurs from the uppermost AND element in column 3, indicating that pumps number 1 AND 2 AND 3 are ready to operate. The OR element has inputs from each of the four AND's and will provide an output if any of the four AND's are satisfied. Its output is a signal to open the station suction valve. This signal is furnished to that valve hydraulic servo, using a suitable pneumatic/hydraulic interfacing device. The servo is thus directed to provide high pressure oil to the valve operator and position the valve in the open position.

When the valve travels to the desired position, a signal is provided by a position detector. This signal is used to continue the sequence by combining it with the valve position request signal in an AND element.

The sequence is completed after performing a similar operation to close the station discharge valve. Upon completion, a signal is provided to Sequence 3(a). It should be mentioned that in many instances, the station discharge valve will already be closed when the request to close it is received. This is of no matter to the logic which proceeds only on the basis of ascertaining that the required conditions are met.

As mentioned earlier, the operation of the various elements shown in the block diagram will be explained in later sections.

5.1.3.4 Pre-Start - Sequence 3(a)

This sequence is similar to Sequence 2 in operations performed and function. Its operations include opening of each selected pump suction and discharge valves and venting of the pump cases to flood them prior to running. Sequence 3(a) is shown in Figure 5-9.

The dispatcher pump selection signals are provided to this sequence from the outputs of the electrical/pneumatic switches shown in Sequence 2. The valves used to vent the pump cases can be simple diaphragm positioned valves operated directly from the output of the fluidic amplifiers. This is practical because the valve sizes do not have to be large due to the low flow rates during venting. Thus, in the block diagram design, these valves are labeled as fluidic valves. This is not intended to imply that fluidic elements are used as the valves since this is not possible.

A fluidic level sensor, in combination with a small sump can be used to detect when each case is flooded. This will be explained in more detail later.

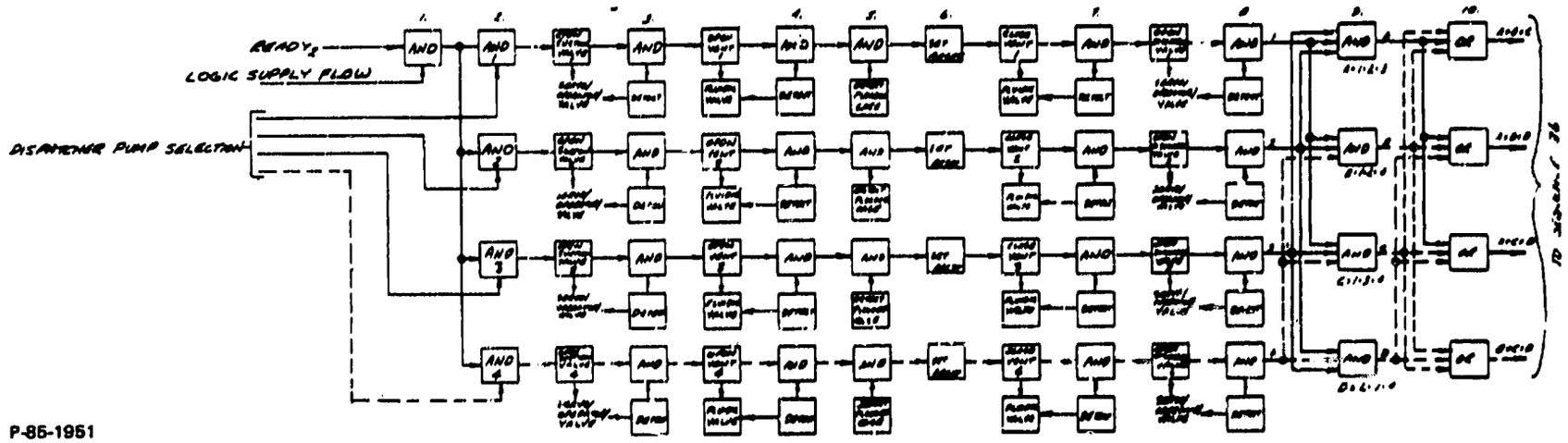

Figure 5-9 - Sequence No. 3(a) - Pre-Start

The flooded case signal is AND'ed with the signal which initially requested the vent valve to open and this AND output is stored using the bistable amplifiers shown in column 6. The bistable output requests the vent valve to close. If the previous signal were not stored or "remembered", closure of the vent valve would result in a loss of continuity in the sequencer because one input to the AND elements of column 4 would disappear. The Reset input shown in the bistable blocks probably would be applied during the station shutdown sequence. Another approach would be to use preferential bistable amplifiers which always revert to a given output when pressurized. Thus, after the system is shut down, the next start would place these amplifiers in the reset position.

In column 9 of the Sequence 3(a), a logic circuit is provided to assure that the startup sequence does not proceed until any combination of three pump discharge valves are open. Furthermore, because of the input requirements of the Start Sequence, 3(b), once this condition is satisfied, the information has to be furnished to each selected engine/pump subcircuit. This is accomplished using the OR elements of column 10. Note that only one of the column 9 AND elements has an output as indicated by the solid line. This output states that pumps 1, 2, and 3 discharge valves are open. Had another combination of pumps been selected, one of the other AND's would have provided the output. Note also that three of the four OR's in column 10 have outputs and that these OR's represent the selected pumps. Had another combination of pumps been selected, then another combination of three OR's would have had outputs.

5.1.3.5 Start - Sequence 3(b)

This is the most complex portion of the overall sequence control. The reason for the complexity is because of the need to: limit the time during which an engine start is attempted; provide a period of time between start attempts to allow the starter motor to cool and the batteries to recover; and provide for a limited number of start attempts. Sequence 3(b) design is shown in block diagram form in Figure 5-10. To aid in understanding a discussion of this circuit, each element is numbered. Fluidic amplifiers and devices are available for fulfilling the operational requirements of each of the elements types shown and will be described in later sections.

The primary initiating signals to this sequence are the three OR outputs of Sequence 3(a). These enter as inputs to the respective ONE-SHOT elements labeled numbers 1, 3, and 5. These elements provide a pulse signal whenever they receive an input and are used to avoid redundancy later in the event that a start attempt fails.

To aid the discussion of this circuit operation, the sequence will be followed through for just one of the engines. It will be assumed that the other two engines start normally on the first attempt.

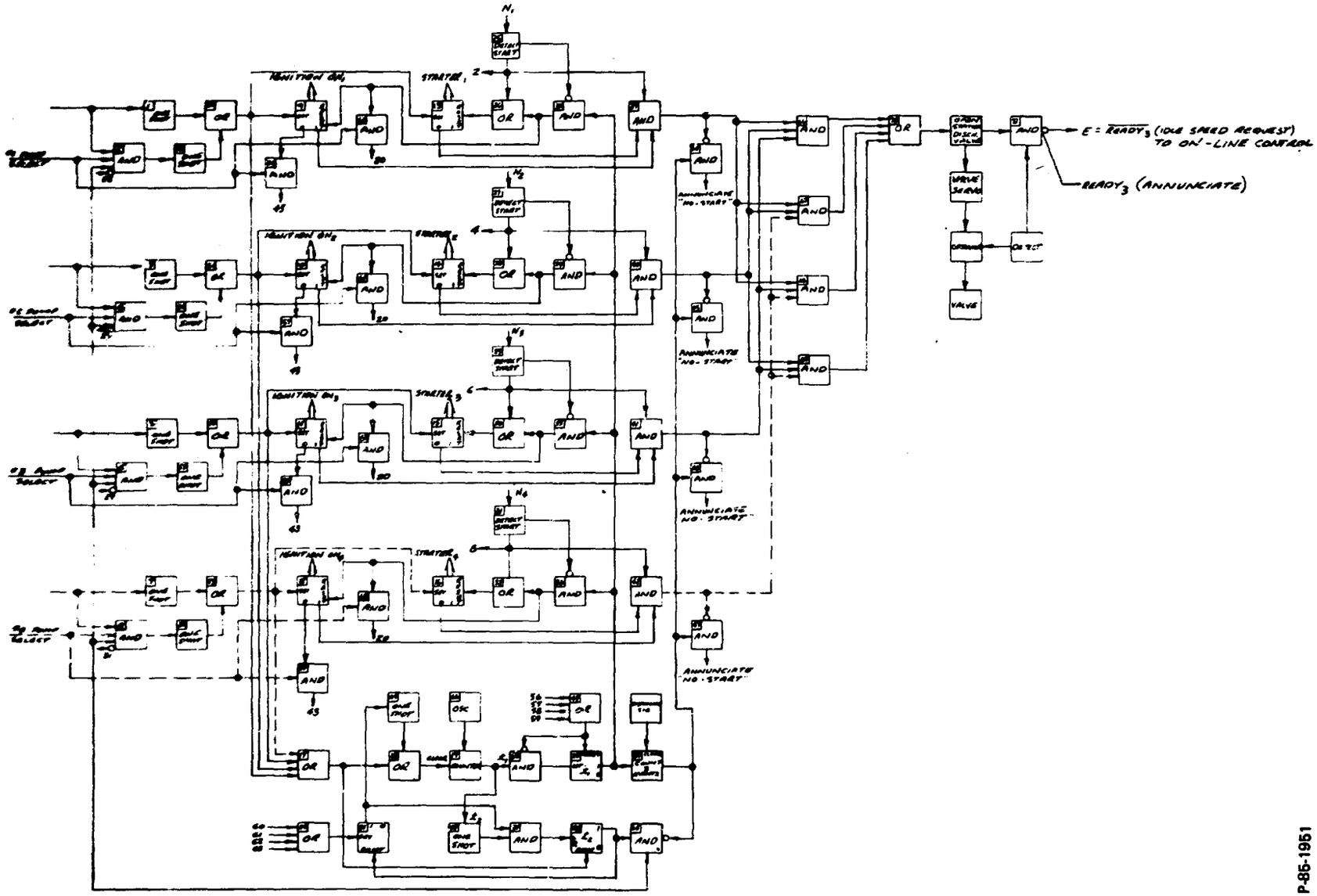

Figure 5-10 - Sequence No. 3(b) - Start

P-85-1951

The output of the ONE-SHOT number (1), thru OR(49), sets the ignition and starter to their energized conditions by setting the bistables number (9) and (13) respectively. It also, through the OR elements (17) and (18) clears the continuosuly operating counter (19). This initiates a predetermined timed interval during which a start can be attempted. This time interval is termed t_1. When time t_1 is reached, the counter has an appropriate output to AND (22). The other required input to AND (22) is from OR (43) and indicates that the ignitions for the three selected engine/pump units are on. AND's (56), (57), and (58) outputs are "0" because ignition bistables (9), (10), and (11) are on and therefore these bistable "0" outputs are off; that is, they are inactive. AND (59) is also "0" because pump No. 4 was not selected. Thus, neither input to OR (43) is active or in a "1" condition so its "0" output is on. This results in an input to AND(22)which, combined with the t_1 input from the counter, satisfies that element and it provides an output.

The output from AND (22) sets bistable (23) to hold this information. Setting bistable (23) provides a "1" or ON signal which is furnished to counter (24) as indicative of one start attempt. The Set output from (23) also is combined with the absence of a start detection signal from element (25) in AND (33) to stop the start attempt by passing through OR (26) to reset the starter bistable (13). The output from AND (33) also turns off the ignition by resetting bistable (9). In addition, AND (33) output is combined with the dispatcher pump selection signal in AND (60) to furnish a signal to OR (20). This sets bistable (21) and provides a pulse through ONE-SHOT (64) to OR (18) which clears the counter (19). Counter (19) begins counting up to interval t_2 for "resetting" the starter. As the count reaches t_1, (which is shorter than t_2) an input is provided to AND (22). However, when the ignition bistable (9) was reset, an output was provided from OR (43) because AND (56) was on. Thus, AND (22) will not be satisfied at this time and the t_1 signal has no consequence. The output from OR (43) is directed to bistable (23) as a Reset input which places (23) in a "0" condition prepared for the next start attempt.

When the counter (19) reaches t_2, the ONE-SHOT (67) output combined at AND (37) with the "1" output from bistable (21) sets bistable (38) to its "1" output. Bistable (21) has a "1" output because OR (20) has an output due to an input from AND (60).

The output from bistable (38) is directed to AND (2) which is then satisfied and it provides a pulse through OR (49) via the ONE-SHOT (48) to set the ignition and starter bistables (9) and (13) respectively. Thus, another start attempt is initiated. This sequence repeats three times (an arbitrary number). After the third attempt the event counter (24) has an output by virtue of its design. This output is combined with the absence of an output from AND (39) to annunciate to the dispatcher that this engine would not start. AND (39) has no output because there was no start detection from element (25) and there is no ignition (9).

A fourth start attempt is blocked because AND (65) can only have an output when event counter (24) has no output. Thus, AND (2) is not satisfied and cannot actuate the ONE-SHOT (48).

If a successful start is achieved, it is detected by detector element (25). This provides an output to OR (26) which resets starter bistable (13), de-energizing the starter. The start detector element (25) output also is directed to AND (39). This element will not have an output because the starter bistable (13) is reset (it has a "0" output) and the ignition bistable is set (it has a "1" output).

The outputs from AND (39), (40), and (41) or any other combination of three engine/pump units are combined in the logic circuit formed by AND's (66)-(69) and OR (70) to request the station discharge valve to open.

When the valve is detected to be in the open position, a ready signal is provided to the ON-Line Control which essentially allows the engines to accelerate from idle speed whenever the pressure sensors for that portion of the control detect a rise in the station suction pressure.

The On-Line Control is described in the next paragraph.

5.1.4 Fluidic On-Line Control

5.1.4.1 Control Considerations

The On-Line Control refers to the steady state operation of the pipeline pumping station. To accomplish this it was determined that the most logical control mode was speed variation of the pumps to maintain station suction and discharge pressures within predescribed limits. This was discussed earlier in Section 5.1.2.2

The control design approach was based upon two primary considerations. The first is the desireability, in a multiple-pump situation, to operate the engines and pumps in a load-sharing mode to equalize wear and to operate as close as possible to the optimum efficiency point. The other consideration is related to the interface between the fluidic station control and the controls furnished with the pump prime movers.

This interface is especially critical because engine manufacturers normally do not want the controls for their engines disturbed. The approach selected is for the fluidic control output to the engines to be a throttle angle setting based upon a required pump speed. Thus, it is only necessary to provide an actuator which accepts an error signal from the control and converts it into throttle position. The engine/control dynamics are not disturbed by the pump station control. Figure 5-11 shows in block diagram form how the fluidic control can interface with either a reciprocating engine or a gas turbine by using this approach.

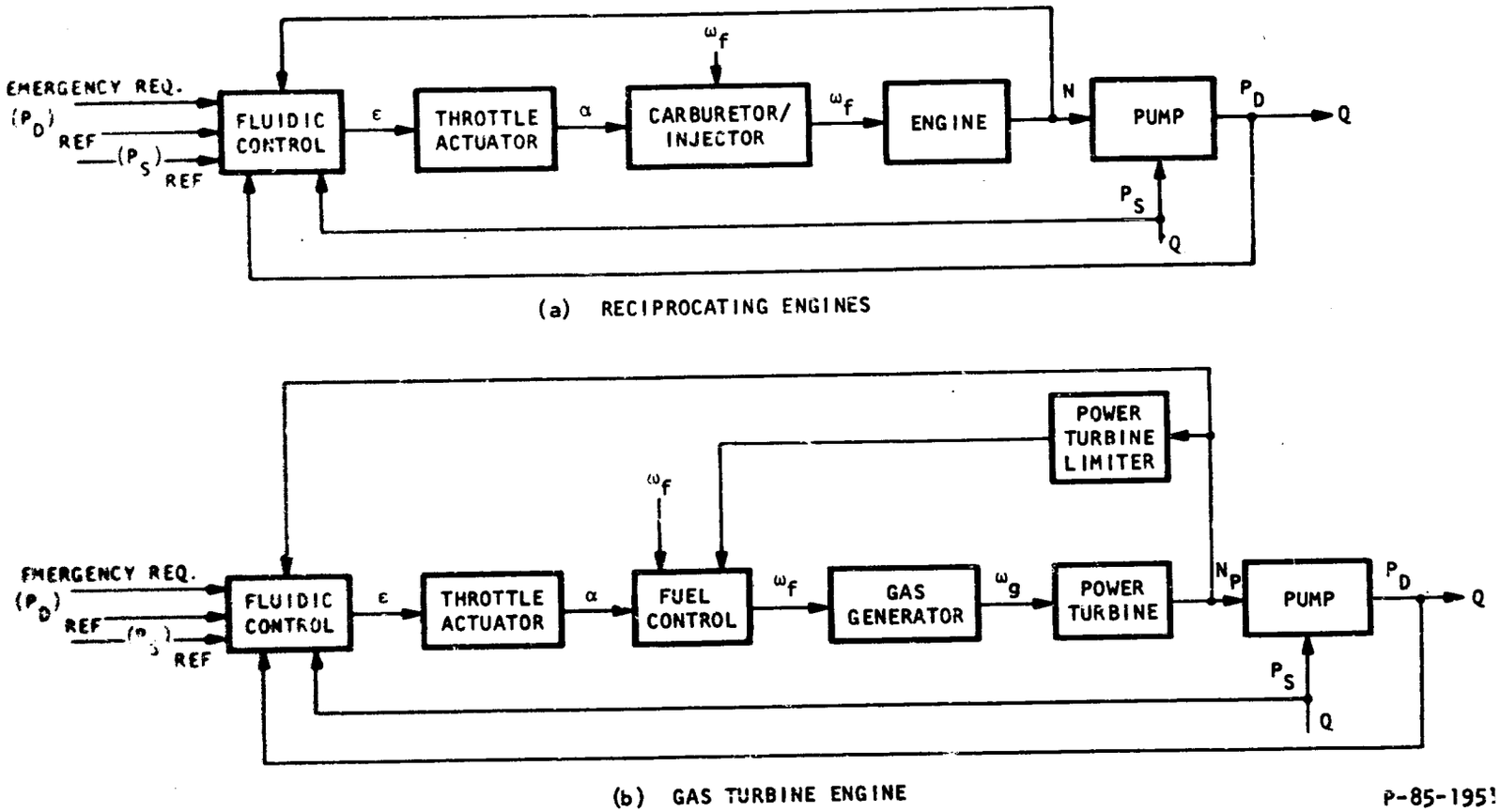

Figure 5-11 - Pump Station Control/Engine Control Interface

Figure 5-12 is a block diagram of the control mode devised to achieve load sharing while maintaining desired pipeline flow conditions. Three parameters are sensed — station discharge pressure, P_D; station suction pressure, P_S; and individual pump speeds, N. The station discharge pressure control loop is used only as an override to protect the pipeline. Both pressure control loops are used to develop a reference speed signal, N_R. A selection circuit selects the lowest of the two generated speed reference signals and furnishes this to summers for each engine/pump throttle control. Measured speed is compared to the reference speed and any error signals, N_ε, drive the engine throttle actuators until the speed error reduces to zero.

Note that this control mode does not require the dispatcher to preselect a given pump speed, flow rate, or station suction or discharge pressure to establish a pipeline flow rate. The amplifier which generates N_R as a function of measured suction pressure will always tend to drive the pumps to their maximum normal operating speed. If suction pressure tends toward the minimum allowable, the reference speed will be reduced proportionally. If station suction pressure continues to rise when all operating pumps are at their maximum normal speed, dispatcher action will be necessary because the next upstream pump station discharge pressure will approach or tend to exceed the normal maximum limit. The first action would probably be to put the fourth pump on line. Otherwise, or in addition, a dispatcher request for higher (emergency) allowable maximum reference speed would be required.

If the station discharge pressure should exceed the normal allowable safe limit, a reduced speed request will be generated by the discharge pressure speed reference circuit, the select-lo circuit will pass the lower speed reference signal and the pump speeds will be reduced until the discharge pressure comes into limits.

Since the minimum allowable station suction pressure can vary with the product being pumped and with temperature and altitude variations, it may be necessary to include additional inputs to the suction pressure control loop. Altitude variations probably would be handled by changing the preset values of minimum allowable suction pressure for the control according to the location of the pump station. Assuming that the typical 20 psig limit at normal temperature is for the fuel with the highest vapor pressure, a temperature bias which raised the minimum suction pressure with increased temperature would be sufficient.

The overall control design is shown in schematic form in Figure 5-13. The various subcircuits which comprise the control are discussed below.

5.1.4.2 Suction Pressure Sensor and Speed Reference Generator

Referring again to Figure 5-13, the suction pressure speed reference generator is noted to be basically a hydromechanical

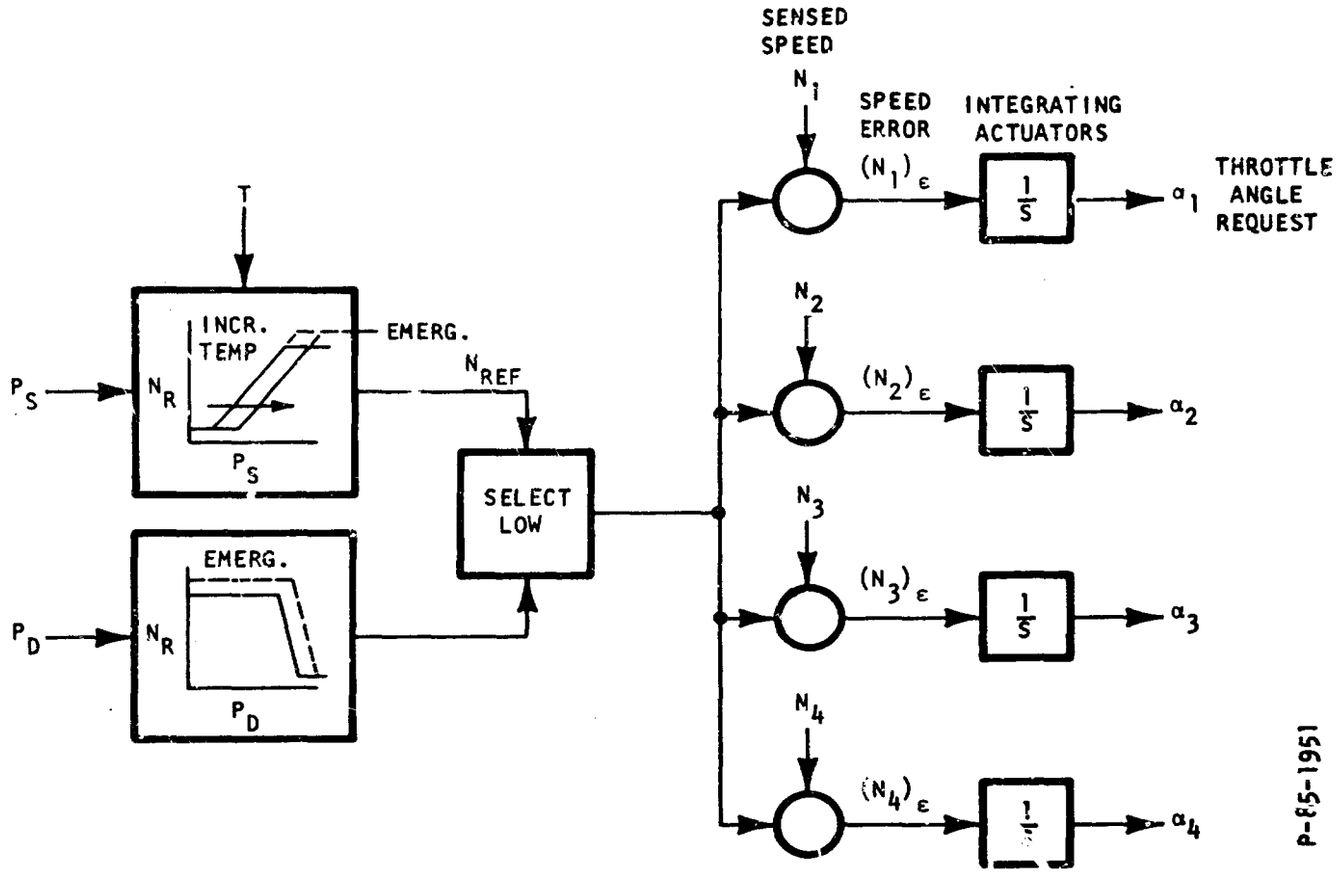

Figure 5-12 - Throttle Control Schematic

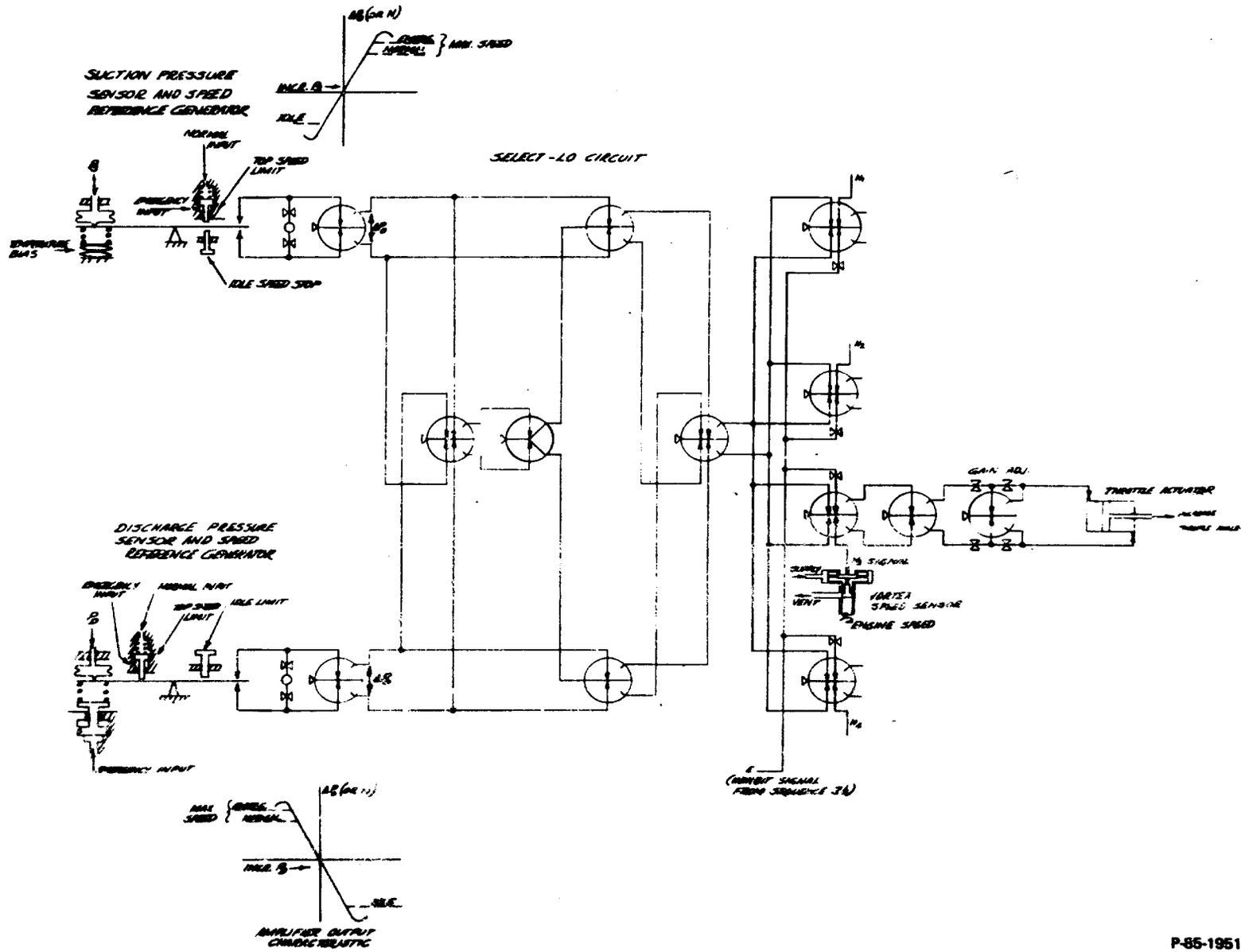

Figure 5-13 - On-Line Pressure Control

control element. This was necessary primarily because of the interface required between the pipeline fluid and the pneumatic fluidic control.

The purpose of this circuit is simply to provide a linear pneumatic output pressure differential as a function of the station suction pressure. This is accomplished by allowing variations in suction pressure, applied through a bellows, to deflect the lever through a small arc which varies the pressure in the two control lines to the adjacent proportional fluidic amplifier. Limits are provided on lever travel to prevent operation of the amplifier into saturation. The upper travel limit has two positions to allow the circuit to generate a higher than normal reference speed for emergency operation. This allows the discharge pressure speed reference generator to request higher speeds without being overridden by the top speed limit of the suction pressure circuit.

The characteristic curve shown for the suction pressure circuit represents the output of the adjacent proportional amplfiier which is a differential pressure analogous to desired pump speed that varies as a function of station suction pressure.

This control element can achieve reliable long-life operation through the use of design techniques which minimize friction and relative motion between parts. An example of this would be the use of a Bendix Flex-Pivot* for the lever support. This device has demonstrated long life and provides a pivot with negligible friction and acceptable spring rates.

The temperature bias shown would be provided by temperature responsive bi-metallic disc springs located to change the pre-set spring load with changes in ambient temperature. The spring itself is provided to balance the lever at a desired null condition.

5.1.4.3 Discharge Pressure Sensor and Speed Reference

Operation of this circuit is very similar to that of the suction pressure sensor. One difference is that no ambient temperature bias is required. Another difference is the means by which the allowable maximum pump speed can be increased for emergency operation. Two inputs are required. One emergency input adds to the reference spring load to allow top speed operation out to higher discharge pressures before the pressurized bellows begins to reduce the speed reference signal. The other input simply changes the lever travel limit to allow a higher than normal reference speed during the emergency operation. Both inputs occur simultaneously.

The output differential from the adjacent fluidic amplifier is designed to have a polarity which is reversed from that for the suction pressure sensor. This accomplishes the desired trend in the generated speed reference signal as shown in the block diagrams of Figure 5-12.

*Trademark of The Bendix Corporation

It would be important to match the outputs of the two amplifiers and adjust the relative gains of each sensor to provide the proper sensitivity and the desired variation of engine speed with pressure in the respective regulation regimes. This is done through proper system considerations during the design.

5.1.4.4 Select-Lo Circuit

The differential pressure outputs of the two pressure sensor fluidic amplifiers, each representing a reference pump speed based upon sensed pressures within the pipeline, are directed into a circuit which reflects the lowest of the two reference speeds. This is termed the Select-Lo circuit.

This circuit was designed by General Electric for experimental control of their J-79 engine.

The circuit accepts both sensing amplifier outputs, selects the one representing the lowest reference speed and passes this through to the throttle control loop. The throttle control loop is explained in the next paragraph.

5.1.4.5 Throttle Control Loop

The speed reference signal, represented as a differential pressure, is furnished to a throttle control loop for each engine. These controls each compare the reference speed differential pressure to the output pressure from their respective engine speed sensors. The comparison occurs in the first stage of a three stage amplifier design developed by the Bendix Energy Controls Division. Any difference between the reference and the sensed speeds is an error signal which is amplified and used to power an actuator. The sense of the error will determine whether the correction will be a throttle angle increase or decrease. The corrective action continues until the detected speed error is reduced to zero.

This amplifier circuit has provision for gain adjustment. Feedback around either of the last two stages can also be included and insertion of suitable volumes in the feedback lines can provide desired lead or lag dynamic characteristics.

During the pre-start and start sequences, a signal is supplied from the output of the Sequence 3(b) circuit which holds the engine throttles at idle until Sequence 3(b) is complete and the engines are running at idle. It will be recalled that the final output of Sequence 3(b) is to remove this signal and allow the engines to respond to pipeline pressure. The inhibiting signal is labeled E in the schematic of Figure 5-10.

The speed sensor shown in the schematic uses a vortex principle developed by the Bendix Energy Controls Division for control of small gas turbine engines. Operation of the sensor will be described in the following section.

5.1.5 Fluidic Amplifiers, Devices and Sensors

In the previous discussions of the pump station start sequence and on-line control, the various control elements were only functionally identified in order to keep the descriptions in general terms and to emphasize that the controls could be implemented with any applicable technology.

In this section, each specific type of element will be discussed in terms of its fluidic counterpart, if any exists. In some cases, the most practical approach is to use hybrid techniques as will be seen.

5.1.5.1 Dispatcher/Pump Station Transceivers

As discussed earlier, this is a requirement which cannot be avoided practically. It is beyond the scope of this study to present details of transceivers or similar equipment, especially since they would be required regardless of the use of fluidic or other control technologies. The transceiver output is assumed to be a low power electrical signal which can be utilized, through electronic amplification, to energize electromagnetic or other relays or switches. These elements can then be combined with suitable pneumatic elements to form transducers. The station input and output intelligence which has been discussed is all digital in nature and therefore relatively easy to transmit and convert at the interfaces.

If analog intelligence is to be transmitted to the dispatcher such as pipeline pressures, a more elaborate transmission process would be required.

5.1.5.2 Electrical/Fluidic Interfaces

In the Sequence 2 control (paragraph 5.1.3.3) there is a requirement to convert the dispatcher signals into their pneumatic counterpart. Since these are simply on-off types of signals, the transduction process is basically a switch and can be achieved with the use of proven standard electrical and fluidic elements.

Figure 5-14 shows what is probably the most straightforward technique. After the dispatcher signal is received and amplified, it is applied as a current to a solenoid valve. When the valve is energized, it opens and applies a control signal to a fluidic monostable amplifier.

In Figure 5-8, the block diagram for Sequence 2, the fluidic switch output is directed to one of the inputs of the AND elements in column 2. The signal has the properties of flow at a pressure dependent upon the impedance into which it is directed. Using similar sized fluidic amplifiers, the input impedances are normally high enough to allow a given amplifier output to be fanned out to three and sometimes four downstream amplifiers.

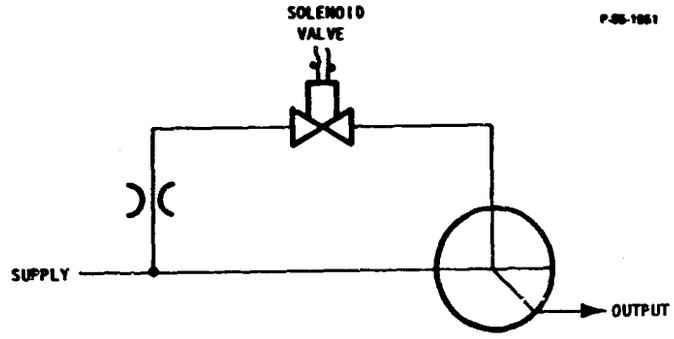

Figure 5-14 - Solenoid Valve E-F Transducer

If a bistable amplifier is used in place of the monostable, the solenoid would only have to open momentarily to switch the bistable. This may be more attractive than requiring the solenoid to remain energized while the station is operating. Actually, further overall refinement to the control design could easily result in a need for only a pulse input. The design of the station shutdown control would enter into the technique for resetting (switching the bistable back to its off position). The bistable amplifiers can be designed to have preferential output positions to insure that they always go to the desired output leg when initially supplied with air.

In Sequence 3(b) (paragraph 5.1.3.5) there is a requirement for an element to furnish intelligence back to the dispatcher regarding the failure of an engine to start. Assuming that this can be coded to identify the problem engine by electronic techniques in the transceiver circuits, a pneumatic to electrical or perhaps electronic transducer is required to furnish the input to the transceiver circuits.

Bendix has developed the miniature diaphragm switch shown pictorially in Figure 5-15. This switch is particularly adaptable for inputs to computers or radio transceivers.

These miniature switches are of interest for several reasons. One is that the diaphragm usually brings two leaf contacts together to complete a circuit. Because of the small mass involved, and the fact that the pair of contacts can move as a pair, a relatively high tolerance to shock and vibration can be achieved. These switches can be made very sensitive to fluidic signals; response is good, and the relatively low cost makes them acceptable for general purpose instrumentation transducers. No attempt is made to obtain mechanical snap-action since the digital fluidic element is expected to produce a definite "on" or "off" signal.

Other manufacturers also market suitable fluidic pressure switches with electrical outputs. Wabco markets a switch with electrical capacities of 150 volts AC and 50 volts DC and which carry

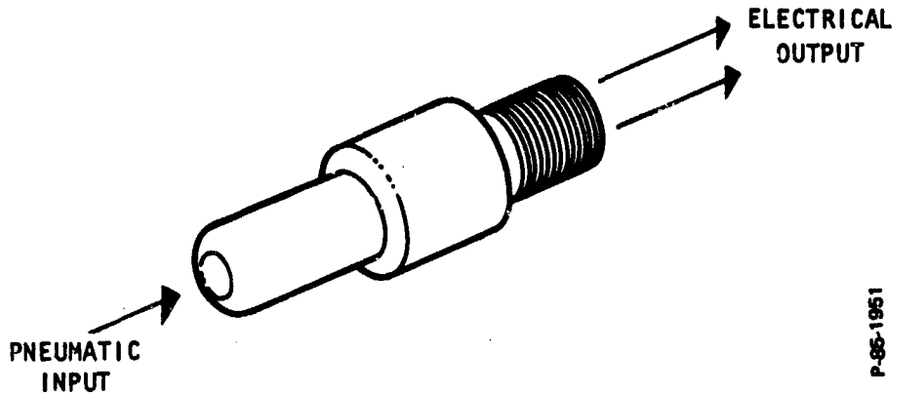

Figure 5-15 - Bendix Miniature Pneumatic to Electrical Transducer

currents of 2.5 amps. This is much more than would be necessary for purposes of this control. Another manufacturer is Gagne Associates, Inc., who market a switch with the trade name of "Sensiflex." These switches operate on only inches of water pneumatic pressure and have more than adequate electrical capacity.

Further refinement of the station control will surely result in a larger amount of intelligence transmitted to the dispatcher. This should be relatively easy to accomplish in view of the straightforward techniques available.

Typical costs of these elements are in the range of $12 each list price with standard discounts up to nominal quantities. Large quantity procurement, of course, can be expected to substantially reduce the cost.

5.1.5.3 Pressure Regulation

As discussed earlier, the pressure regulation requirements are not precise. The pneumatic fluidic control is almost at constant flow because of the use of jet-on-jet amplifiers. Circuit flow variations only occur when electrical to fluidic interface devices are actuated and these could be minimized by using 3-way solenoid valves or torque-motor actuated push-pull flapper valves.

As long as the APU prime mover governor holds a reasonably constant speed, no pressure regulator would seem to be necessary for the pneumatic circuit.

The hydraulic pump would be a constant displacement design and, running at a constant speed, would require a pressure control valve to limit the pressure when no cylinder flow was required.

Other pressure control techniques are possible. For example, to conserve pump life and to reduce power requirements, the pump could be declutched when no hydraulic power was required. Also, a variable stroke pump could be used and a control provided to vary stroke when cylinder flow was required.

The accurate determination of the best approach would require a more comprehensive tradeoff than the scope of this study can provide.

Since the approach taken for this study was to select a simple gear type pump, a relief valve seems to be the logical method for pressure control.

There is no adequate fluidic technique for pressure regulation at this time; therefore, the approach would be to select a standard hydromechanical valve for this function.

5.1.5.4 Pressure Level Detectors

Fluidic pressure level detectors are available but their operation is based upon the amplifier supply being independent of the sensed pressure; that is, the sensing amplifier is assumed to be at a reliable pressure level for proper operation.

In Sequence 1 (paragraph 5.1.3.2) the requirement is for a detector to sense when the hydraulic and pneumatic pressures are at their respective desired levels. Use of a pneumatically powered fluidic amplifier would not work for either case. In sensing the pneumatic pressure level, the amplifier supply comes from the same source as that being sensed.

Therefore, some simple form of pressure sensitive device using a diaphragm and spring would be a practical way to implement pressure-level detection for the hydraulic and pneumatic power supplies.

Figure 5-16 shows schematically how a reliable and simple pressure level detector could be implemented for the pump station control. The reference spring force is taken up by the fixed stop until the sensed pressure acting on the diaphragm develops a force equivalent to the preset reference spring force. At that time, the flapper valve moves downward. If a monostable fluidic amplifier is positioned such that the flapper valve restricts the normally open bias port (see description in Appendix B) when it moves downward, the amplifier output will switch.

This action alone indicates that a given pressure level has been reached. However, if the pressure level were to hover around the set point, the sequence logic could cycle on and off in response to minor fluctuations in the pressure level. To avoid this condition, some hysteresis is desirable. Hysteresis can provide a non-cyclic band of safe operating pressure and there are several ways to achieve this. Rather than show mechanical approaches, a fluidic logic

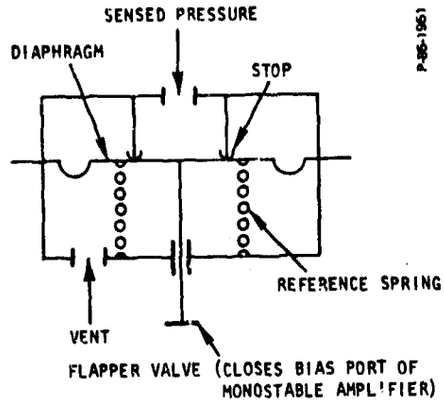

Figure 5-16 - Pressure Level Detector Schematic

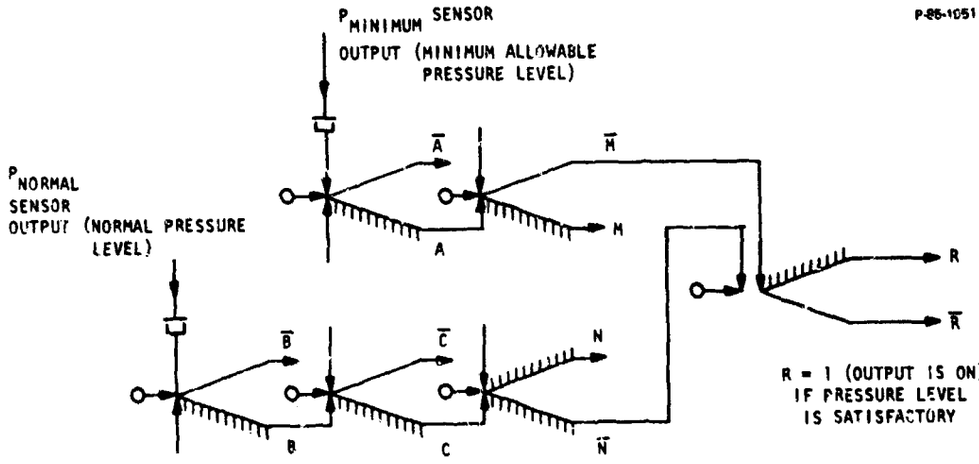

PRESSURE LEVEL AND SEQUENCE		LOGIC CONDITION						DECISION
		A	B	C	M	N	R	
1. START-UP:	PRESSURE LEVEL BELOW MINIMUM ALLOWABLE	1	1	0	0	0	0	INHIBIT
2. RUN-UP:	PRESSURE LEVEL REACHES MINIMUM ALLOWABLE BUT BELOW NORMAL	0	1	0	1	0	0	INHIBIT
3. OPERATING:	PRESSURE LEVEL AT OR ABOVE NORMAL LEVEL	0	0	1	1	1	1	PROCEED
4. OPERATING:	PRESSURE LEVEL FALLS BELOW NORMAL BUT STILL ABOVE MINIMUM ALLOWABLE	0	1	0	1	1	1	CONTINUE
5. OPERATING OR SHUT-DOWN:	PRESSURE FALLS BELOW MINIMUM	1	1	0	0	0	0	INHIBIT

Figure 5-17 - Pressure Level Sensor Logic Circuit

network is shown in Figure 5-17 that will provide hysteresis using two pressure level detectors. One detector is set to respond to the absolute safe minimum operating pressure level. The other is set to respond to a higher pressure, but one that is still below the normal expected pressure level variation. The table included in the figure explains how the circuit operates. This, of course, is just one way to achieve the requirements for pressure level detection in the APU start-up sequence but it serves to illustrate that fluidics can be interfaced with this requirement.

5.1.5.5. Oil Level Sensor

In paragraph 5.1.3.3, detection of proper engine oil level was indicated as a potentially important check to be made prior to starting a pump prime mover.

With air as the power supply for the sequencer logic, one practical method for detection of safe engine oil level is to use the bubbler tube technique. This has found wide application in other technologies as well as fluidics and is shown schematically in Figure 5-18.

The monostable amplifier shown will have a "1" output as long as the oil head above the discharge end of the bubbler tube restricts air flow to a predetermined amount. The restriction at the bubbler tube discharge causes a high control pressure to act on the amplifier, maintaining it at the "1" output.

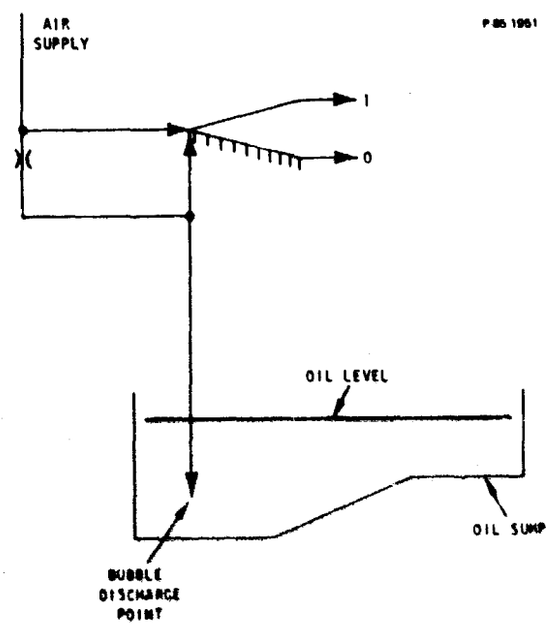

Figure 5-18 - "Bubbler Tube" Oil Level Sensing Technique

A disadvantage of this sensor is the relatively low head available from the oil in a typical engine sump. Therefore, it may be necessary to add two or three fluidic stages of pressure amplification to this sensor in order to make its output pressure level compatible with the rest of the logic circuit.

The output from this sensor can be stored for purposes of continuing the sequencer operation or it can be considered to remain active during operation to provide shutdown intelligence if the operating level of the oil dropped below safe minimums.

The bubbler-tube level detector is also applicable to sensing when the pump casing becomes flooded. The basic variation from the oil level detection function would be the method of "resetting" the sump.

A method of implementation would be to route a small diameter line from the bleed valve, located at the top of the pump casing, to a small auxiliary sump at some level below the bleed valve. The flooded case would push fuel into the sump. The bubbler sensor would detect a rise in fuel level in the sump and initiate action to close the pump case bleed valve.

After the valve is closed, a small drain port in the auxiliary sump would empty the sump into a central pump station sump. This would prepare the sensor for the next start-up.

5.1.5.6 Engine Start Detection and Speed Sensor

There are several parameters available for engine start detection. Some depend upon the engine type. For example, spark ignition engines undergo a noticeable change in manifold vacuum upon starting. This information can be obtained by simply referencing the bias port of a pneumatically powered monostable amplifier to the manifold. The increased vacuum at idle over that for cranking or shutdown would switch the amplifier and provide the necessary signal to the sequencer. In the start sequencer circuit shown in Figure 5-10, it is only necessary to have this signal available momentarily because the information is stored in a bistable amplifier. Thus, the eventual loss of the manifold vacuum at high engine load would not provide erronious information.

Engine speed is a logical indicator of a successful start. Since a speed sensor is required by the steady-state controller shown in Figure 5-13, it is practical to use the same signal as a start detector. Therefore, a speed sensor concept will be described next that satisfies the requirements for start detection during the start sequence and for steady state operation of the pump station. Figure 5-19 shows the speed sensor schematically. It consists of a hollow rotating button with fluid flow radially inward through holes in the button. Rotation of this button generates a vortex swirl which is amplified as the flow proceeds toward the outlet in the center. Most fluidics engineers will recognize the device as a miniature rate sensor. The advantages

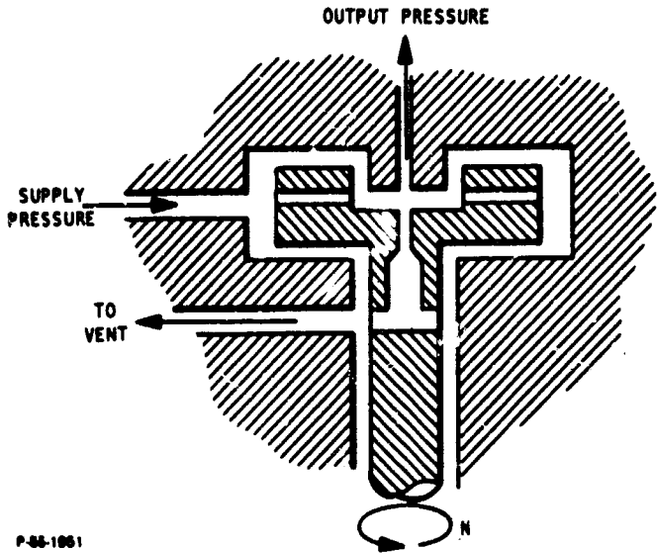

Figure 5-19 - Speed Sensor Schematic

of the sensor include a linear speed-pressure drop relationship, no unbalanced forces, and simplicity of construction. A one inch diameter unit with a 10 psig air supply will provide an output which varies over a range of 10 psi with an input speed between 0 and 3,000 rpm. The operating speed range is controlled by the diameter of the button.

This sensor, with a two stage throttle controlled biased vortex push pull amplifier, has been run on a Boeing 502 free turbine engine. Two systems were used — one on the compressor turbine spool, and one on the power or free turbine shaft. Stable governing and load sharing between the two governors was demonstrated over the full range of engine operation.

5.1.5.7 Engine Throttle Actuator

As explained previously in paragraph 5.1.4, the pump prime mover speed is adjusted by setting the necessary throttle angle to reduce any speed error signal to zero. Thus, this circuit can be considered for either gas turbine or reciprocating engine prime movers and the basic engine control characteristics are unaffected.

The throttle actuator is the interface device between the On-Line Control and the prime movers. The schematic of Figure 5-13 depicts a piston-cylinder actuator. However, a rotary actuator could also be considered. It may be necessary to insert a pilot stage between the amplifier output and the actuator to increase the system stiffness if a simple piston-cylinder actuator is selected.

Bendix Research Laboratories has developed a unique rotary actuator that has inherent high servo stiffness and yet has low reflected inertia. This device is the Dynavector®, and it has been successfully applied in a wide variety of environments and operating conditions. Figure 5-20 shows a schematic of the Dynavector®. Application of the Dynavector® as a throttle actuator is relatively straightforward and would not require sophisticated materials, large gear ratios or large overall size. The size would be determined by the required throttle torque, the desired response and the available pneumatic or hydraulic power supply. If pneumatic power were selected, it might be desirable to add a pilot stage for increased flow capacity to the actuator for response considerations. If hydraulic power were selected (using the same power supply that is used to operate the station pipeline valves), a pneumatic/hydraulic transducer would be needed between the amplifier circuit and the throttle actuator.

Operation of the Dynavector is described below.

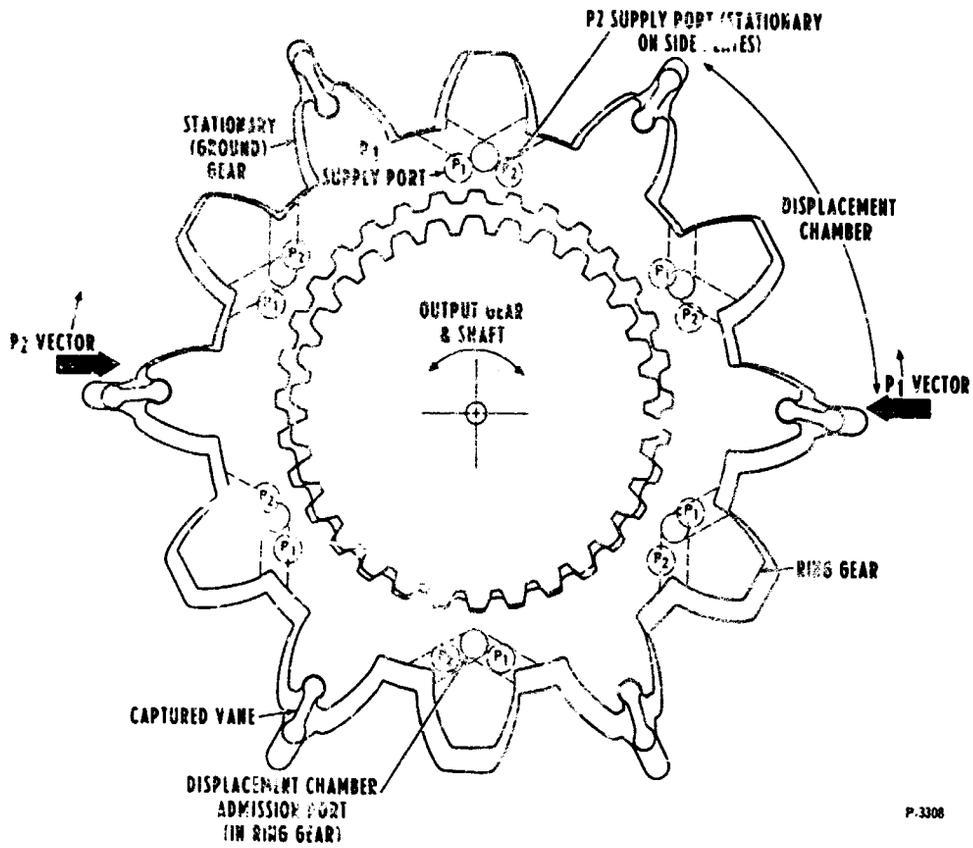

Figure 5-20 - Basic Operation and Design of Dynavector Drive

The Dynavector® actuator combines a unique high-speed rotary motor with a simple, reliable transmission to provide high-torque, low-speed rotary power. It can be a hydraulic, pneumatic or electric device.

The fluid power Dynavector® motor is an integral high-speed motor and high-ratio transmission without high-velocity mechanical elements. The major components of the Dynavector® motor assembly consist of a series of displacement chambers, a unique integral epicyclic transmission, and commutation porting. The transmission and motor use elements common to both, resulting in a much simpler and more reliable design.

Two features make this actuator small and light: (1) its transmission reduces the high-speed input to a low-speed output in one step, using only two moving gears; and (2) it has no physical motor - only a rotating force vector; hence, the name "DYNAVECTOR®." As the force vector rotates at high speed, it causes the input member of the transmission to orbit. This orbiting member is geared directly to the rotating output shaft. Because it orbits instead of rotates, gear-tooth contact velocities are small and a large speed reduction is accomplished without complex gearing.

The power element is a positive displacement, very low inertia, non-rotating vane motor. Its output is a radial force vector which rotates at high speed and in either direction of rotation. The displacement chambers formed by the vanes and the housing expand and collapse at the same speed as the force vector, but do not rotate. The motor is self-commutating but does not contain a rotating portion plate or spindle. The absence of high-velocity members in the motor significantly reduces the inertia, resulting in high acceleration capability.

The integration of the power element and epicyclic transmission into an integral actuator design results in an ideal servo-actuator with a high torque-to-inertia ratio and high efficiencies at rated loads.

Specific advantages of this new actuator concept include:

Improved Performance

The motor's new operating principle reduces the actuator inertia (as seen at the output shaft) more than 100 times. As a result, dynamic frequency response improvements of more than one decade can be obtained.

Decreased Weight and Size

The complete actuator, including transmission and motor, weighs only as much as the assembly of a conventional transmission that is equally rated. Design flexibility allows almost any envelope requirement to be met.

Lower Cost

Basic simplicity results in significant manufacturing cost reductions, compared with conventional units. The operating principle demands less critical tolerances, resulting in further cost reduction.

Higher Reliability

Extremely low relative velocities between all moving members reduces wear to a minimum. Reduction in number of parts enhances reliability over more complex conventional systems. All members are rigid, to eliminate fatigue limitations.

A force vector is generated by pressurizing three adjacent displacement chambers while venting the remaining three. The vector is made to rotate by pressurizing a vented chamber adjacent to the original three pressurized chambers while simultaneously venting the diametrically opposite pressurized chamber. At that instant, the force vector advances through an angle equal to the arc width of one displacement chamber. If the force vector on the ring gear is located at approximately 90 degrees to the ring and output gear contact point, the ring gear will move, causing the output gear to turn and the contact point to move. Movement of the ring gear switches the porting, causing the force vector to rotate so that it remains 90 degrees to the contact point; thus, the motion will be continuous and the output shaft will turn continuously but at a much lower speed than the force vector. The ratio will be determined by the difference in number of teeth between the ring gear and the output gear. The gears in Figure 5-20 have 30 and 32 teeth; thus, the reduction ratio is 15:1.

The available differential pressure in the form of two motor port pressures, P_1 and P_2, must be commutated to the proper displacement chambers to produce a rotating force vector in phase with the ring gear motion. To insure that this phase relationship always holds true, the motion or position of the ring gear is used to provide this commutation through a series of ports. Each displacement chamber has a pair or supply ports designated P_1 and P_2. The P_1 ports are all interconnected in the housing and brought out to a single inlet port, as are all the P_2 ports. These ports are in the housing and, therefore, are stationary with respect to the displacement chambers. They are also located under the ring gear face, as shown in Figure 5-20, and a port connecting the displacement chamber to the ring gear face is located opposite them.

By locating these P_1 and P_2 ports as shown in Figure 5-20, the ring gear ports will open P_1 ports to half the displacement chambers, and P_2 ports to the remaining half. The resulting pressure force on the ring gear from the displacement chambers connected to P_1 is 180 degrees opposite P_2 and 90 degrees from the output gear contact point. Therefore, pressurizing P_1 and venting P_2 produces rotation in one direction, while interchanging pressure and return reverses the motor. This also

satisifes the desired relationship between force vector and ring gear position. Because this commutation is created by the displacement member or ring gear itself, it will always rotate in phase with the motor, producing maximum efficiency.

There is a very low-speed torque ripple, which depends only on the number of vanes or displacement chambers. The number of chambers need not be odd or even, since the starting torque is only a function of the force vector angle, which varies through an angle equal to the angle included by one displacement chamber.

The basic components of the Dynavector drive are the ring gear, the ground gear and housing, the center output gear, and the unique vanes. The displacement chambers are formed between the ground gear and the ring gear mesh by the vanes. This gear mesh provides displacement motion without rotation because both gears have exactly the same number of teeth. It may be considered as a loose spline but it is a true involute gear mesh. The internal portion of the ring gear forms the transmission between the motor and the output shaft and represents the epicyclic transmission. The ring gear does not rotate but orbits about a small radius and drives the output gear.

Several limiting factors present in conventional rotary motors plus transmission systems are significantly improved by the Dynavector actuator design and operation. The relative velocities between dynamic and static members are very small because of the small amplitude orbital motion. In a Dynavector actuator, the relative velocity between the gears and housing is only a function of the eccentricity, which is less than one-tenth of an inch, times the angular velocity, whereas in a conventional motor there are usually components with a radius of more than an inch rotating at the same angular velocity. Thus, for a force vector speed of 3,000 rpm, rubbing velocity would not exceed 30 in/sec, whereas in a conventional motor rotating at 3,000 rpm, rubbing velocities would be greater than 300 in/sec. The relative tooth velocities correspond to those found only in the last stage of a conventional transmission. The absence of high relative velocities produces high mechanical efficiency by reducing friction losses at high motor speed.

Another factor that is significantly reduced is actuator inertia. In conventional high-speed motors, the motor inertia resulting from a rotor mass rotating at high angular velocities has always limited the motor response capabilities. The small volumes under compression have helped to compensate for the poor response due to inertia and have placed rotary servos in contention, provided high pneumatic pressures are used.

The Dynavector actuator, having no mass rotating at input speed and only a small reflected inertia due to the small eccentric rotation of the ring gear and the low speed output shaft, is equivalent to the reflected inertia of a similar capacity piston cylinder actuator. On the other hand, the volume under compression is equivalent to a rotary

servo and is much less than that of a piston-cylinder actuator. This smaller volume allows the use of a lower pressure or bulk modulus than used in state-of-the-art pneumatic systems, and hydraulic Dynavector systems will have correspondingly higher natural frequencies.

Again, comparison of a conventional rotary motor's response characteristic to an identically-sized Dynavector motor operating with the same servovalve and supply pressure is shown in Figure 5-21. The extremely high pneumatic response characteristic of the Dynavector motor, especially at only 90 psig, verifies a substantial reduction of both motor inertia and volume under compression.

The integral epicyclic transmission consists of the ring gear, the ground gear, and the output gear and shaft. The only input to the transmission is the rotating force vector of the Dynavector motor, which can be considered as a virtual planet member producing the required epicyclic motion of the ring gear.

In high-ratio versions of the Dynavector actuator, the ring gear rotates as it orbits. The ring gear has two different pitch diameters, with N_2 and N_3 teeth as shown in Figure 5-22. The first pitch diameter engages with the ground or fixed gear and the second, with the output gear on the output shaft. If the two meshes had equal pitch diameters, there would be no rotation of the output shaft with respect to ground; yet the ring gear could rotate freely. The ratio would then be infinite. By making the pitch diameters nearly equal instead of equal,

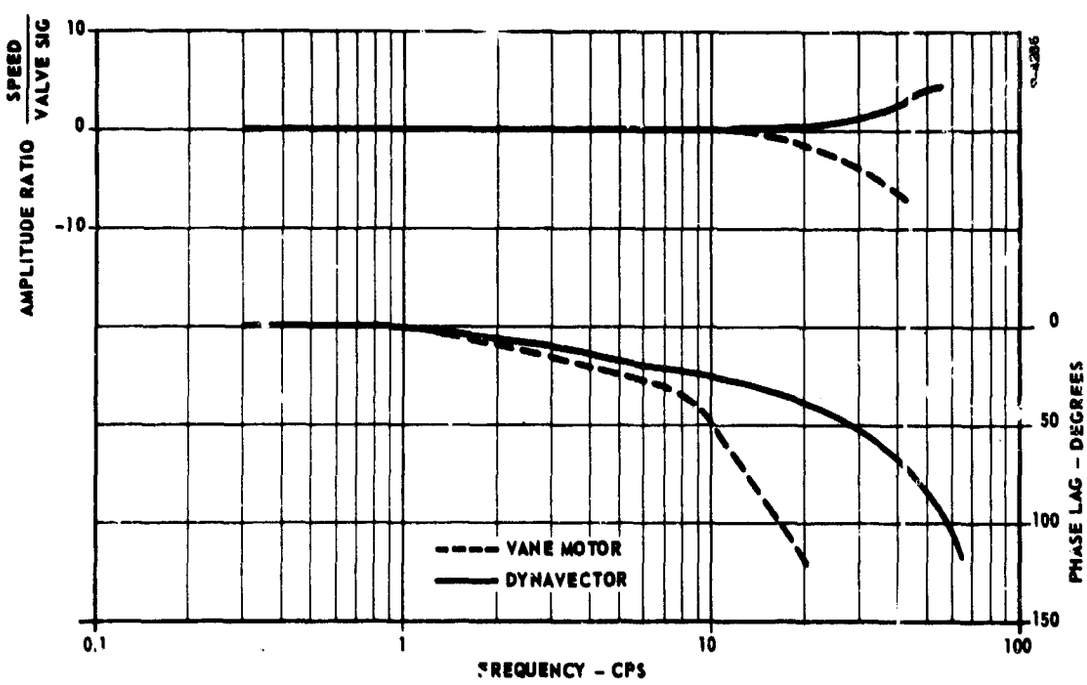

Figure 5-21 - Frequency Response - Servovalve Driven Rotary Motors

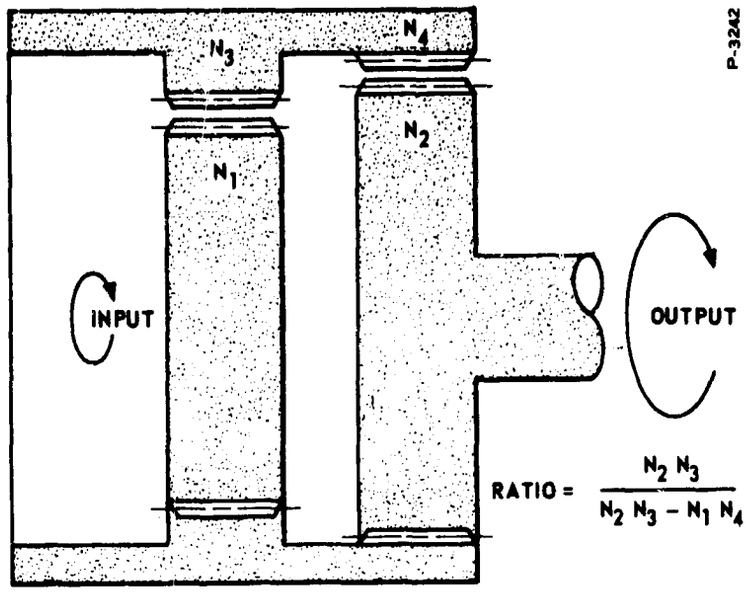

Figure 5-22 - Epicyclic Transmission Arrangement

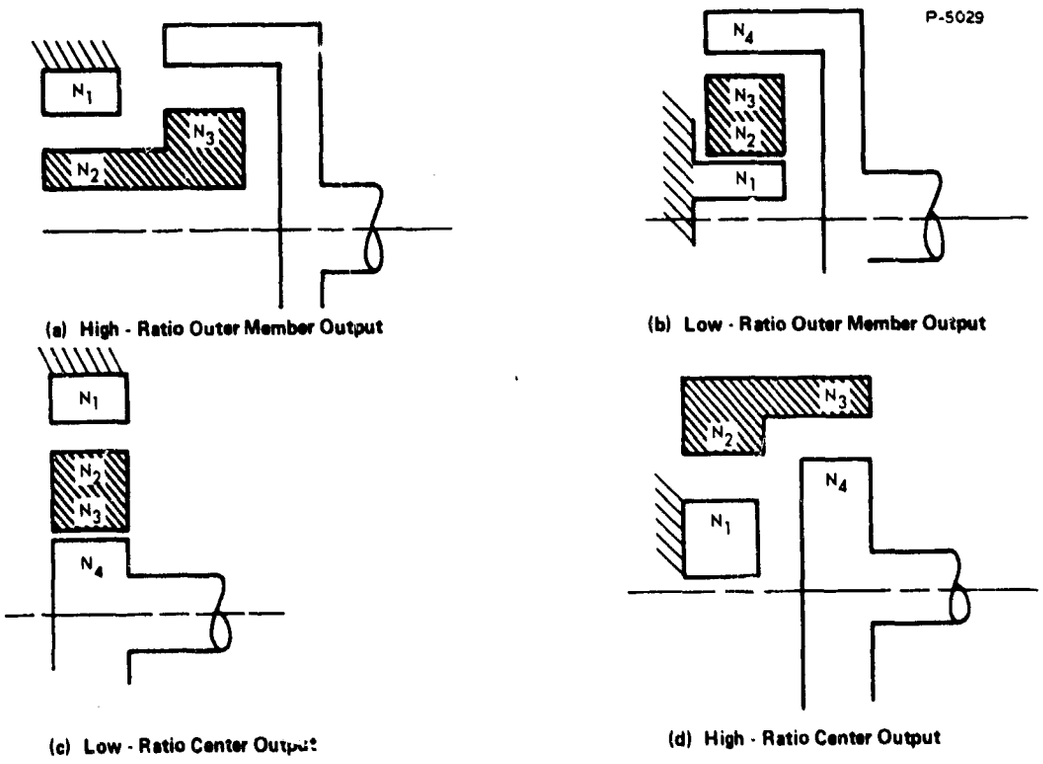

Figure 5-23 - Dynavector Actuator Epicyclic Transmission Arrangement

a very high ratio can be obtained with ease. The overall ratio is given by the formula

$$R = \frac{N_2 N_4}{N_2 N_4 - N_1 N_3}$$

where

N_2 and N_3 = number of teeth in the two diameters of the ring gear

N_1 = number of teeth in the ground gear

N_4 = number of teeth in the output gear

N_1 meshes with N_2 and N_4 meshes with N_3. The ratio between ground and the ring gear (between the ring gear's orbiting the rotating speeds) is given by

$$R_R = \frac{N_2}{N_1 - N_2}$$

Note that the ratio between the ring gear and ground may easily be varied through a wide range, with little change in the basic ratio. Therefore, in designing the transmission, the eccentricity may be chosen first, setting R_R and N_1 and N_2. Then N_3 and N_4 may be chosen to provide the desired ratio. The procedure permits the use of a standard motor, having a given eccentricity, with any ratio transmission.

The transmission arrangement shown in Figure 5-22 is only one of four arrangements possible. The gears may be inverted from external meshes to internal, and vice versa, such that the output may be either a center output shaft or an outer housing hinge design, and either low-ratio or high-ratio configuration. The four transmission arrangements are shown in Figure 5-23.

These are differential transmissions, which have formerly been considered inefficient devices. However, the inefficiencies in conventional differential gearing result from the high pitch-line velocities of the input member and planet gears, which also are heavily loaded. These factors are not present in the Dynavector actuator. A rotating force vector is used in place of an input gear, and the pitch diameters of the ring gear are nearly equal to the pitch diameters of the reaction gears; therefore, no high velocities exist in the transmission.

An advantage of having the ring gear pitch diameter nearly equal to the mating gear pitch diameter is the high load capacity. Under load, many teeth come into contact as separation distances are very small and normal deflections quickly allow many teeth to share the load. This same feature provides high resistance to shock overloads and minimizes dynamic loading forces. The transmission has excellent torque transmitting capability because the dynamic loads are negligible and the static strength equals the dynamic strength.

This load-sharing capability of the ring gear teeth has been demonstrated by tests conducted under an Air Force contract with Wright-Patterson Air Force Base. A pneumatic Dynavector actuator, Model PL-015-U1, was instrumented and run under varying torque loads. The number of teeth in contact varied from 10 percent at zero load to 25 percent at full torque load.

The tooth shape used is a standard 20-degree involute tooth. Use of standard involute gearing simplifies the calculations and analysis of the design. The gear design does not rely on empirical data; therefore, it can easily be verified.

5.1.6 Operation of Automatic Line Valves

The automated pipeline pump station has various suction and discharge valves that must be remotely operated. Consideration of power supply requirements in paragraph 5.1.2.1 led to selection of hydraulic power for this function. Therefore, two basic components are required to complete the automatic sequencer system. These are the hydraulic actuator or operator for powering the valves open or closed and a pilot stage for transducing the pneumatic signal from the sequencer into a high pressure hydraulic flow signal to the actuator.

5.1.6.1 Hydraulic Actuators

Two basic types of hydraulic operators can be considered. They are the piston/cylinder for simple linear actuation or one of several types of rotary actuators.

Some basic information was already presented for the piston/cylinder actuator. A typical 8-inch gate valve requires about 4000 lb. to properly seat against a line pressure of 1000 psig. Using a hydraulic pressure of 1000 psig, this force can be obtained with a 2.5 inch bore cylinder and the actuator weight will only be about 15 pounds.

Normally, no more than three of these actuators would be required to operate simultaneously and most pipelines allow about 60 seconds for opening or closing. Thus, a 1 gpm hydraulic power supply provides adequate flow rate.

Several rotary actuators can be considered as there are a number of rotary hydraulic motors available. Application to typical gate valves would be straightforward as these valves are manually operated in a rotary mode.

Bendix Research Laboratories has developed the Dynavector® actuator for a variety of applications. The Dynavector® was described in paragraph 5.1.5.7 for use as an engine throttle actuator. Throttle actuation requires a very low output torque but the Dynavector® has been designed for output torques from less than 0.2 to more than 8000 lb-ft.

A preliminary design study indicated that a hydraulic Dynavector® with the necessary output torque of 300 lb-ft at a pressure drop of 1000 psi would weigh 10 pounds and have an outside diameter of about 5 inches and a length of about 3.5 inches. The output shaft speed at full load would be 60 rpm.

A typical 8-inch valve stem has a diameter of 1.375 inches, a lead of 0.25 inches and a stroke of about 9 inches. The required torque to seat the valve at 1000 psig line pressure is 220 lb-ft if ball bearings are used to absorb the seating thrust.

Therefore, this Dynavector® design would have more than enough output torque and, at 60 rpm could close or open the valve in about 36 seconds. This is more than adequate for control purposes.

The valve specifications quoted are for a Crane Company, Slow-Operating, Model Number 33 valve. It is a type of valve that is positioned by operating the stem nut.

5.1.6.2 Pilot Stage

The pilot stage performs two functions. It transduces the signal from the pneumatically powered sequence circuit into a suitable input form and it gates hydraulic flow to the proper port on the actuator.

The station suction and discharge valves are usually fully opened or closed. Therefore, the pilot stage only need be a four-way hydraulic spool valve positioned by a pneumatic signal. Valve stroke rate between the open and closed positions can be limited simply by restricting the hydraulic fluid flow rate.

The pneumatic input signal from the sequencer can be isolated from the hydraulic circuit with diaphragms or bellows. A schematic of this type of pilot stage is shown in Figure 5-24.

5.1.7 Practicability of Fluidic Control for Pipeline Pump Stations

Fluidic technology appears to offer a feasible solution to the particular requirements of Army pipeline pump station control. Logic circuitry applications have been among the most successful applications of fluidics to date. Basically, the startup sequencer is a logic circuit. The exceptions are the required interface devices. Also, the On-Line control is a proportional controller. However, in both instances, the examples presented and discussed are felt to be practical also.

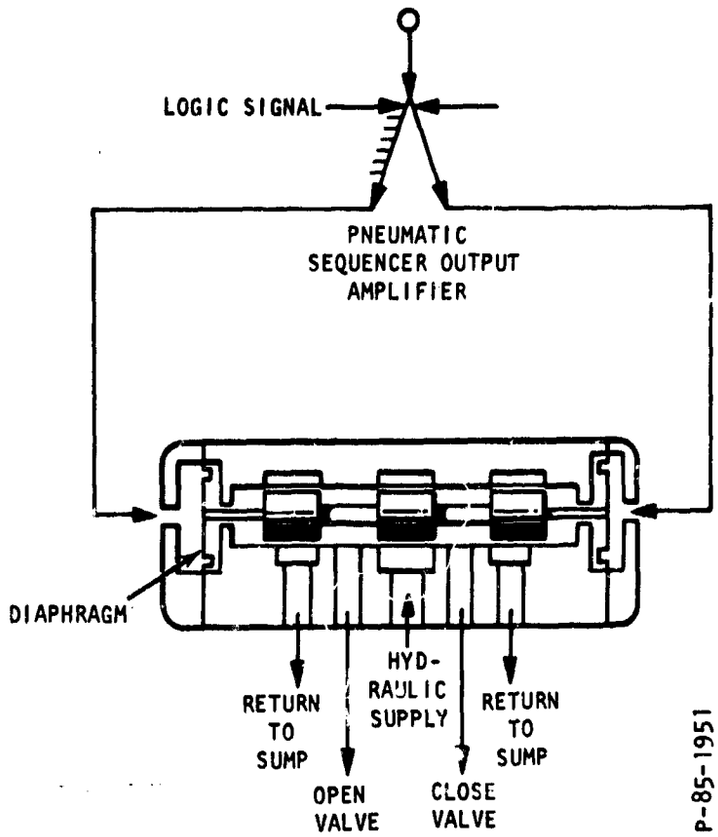

Figure 5-24 - Pipeline Valve Operator Pilot Stage

Electronics certainly can also be used to implement the logic requirements of the pump station control. At this stage in the state of the art of both technologies, electronics probably offers more compact and even lower cost controls.

However, fluidic technology has potential for much higher reliability as long as adequate precautions are observed regarding cleanliness of the power supply and the circuit interconnections. It is also important to properly size the many signal passages, supply lines and vent lines just as it is important in electronics to properly size conductors and insure adequate grounding and cooling.

Electronics are susceptible to electromagnetic interference, ionizing radiation, moisture, acceleration and shock, temperature extremes and chemical reactions. Fluidic devices and circuits are essentially only susceptible to power supply contaminants. Where severe mechanical or thermal shock can be expected, fluidic circuits can be fabricated from stainless steel or other suitable metals. In many cases, the injection molded plastic units can provide sufficient thermal

and mechanical shock resistance at a lower cost than the metallic constructed units.

A final selection of fluidic or electronic control would require more detailed analysis than was possible in this study. Before a realistic comparison could be made, it would be essential to implement at least a portion of the startup sequencer using fluidics. This is suggested because fluidics have seen only very limited use in pipeline control to date. The particular requirements of the Army pump station seem to justify the implementation of such a fluidic control prior to or in connection with a detailed tradeoff study.

Based upon the results of this preliminary design study, it is concluded that fluidic control of Army pipeline pump stations is feasible, and it is recommended that a fluidic pipeline pump station control be implemented to allow a more accurate estimate of its practicability.

5.2 FUEL STORAGE FACILITIES

5.2.1 Introduction and Requirements

Army fuel storage facilities can be separated into four categories. These are: base terminals, district terminals, pipehead terminals, and intermediate terminals. Each category may provide fuel storage for the four primary fuels. The most obvious difference between them is the storage capacity. The base terminal serves the function of receiving fuels from tankers and delivering these fuels into the trunk pipelines for distribution throughout the theatre of operation. The pipehead terminal is the final delivery point for the distribution system and usually is close to the tactical operations. The storage facilities can be either rigid tanks or portable collapsible tanks depending upon the activity of the situation. In between the base and pipehead terminals are located the district and intermediate terminals. District terminals serve large operational areas and, therefore, usually have large capacity. Intermediate terminals store fuels for isolated tactical groups including airfields. An important secondary function performed by the district and intermediate terminals is to provide regulating tankage. This means that the stored fuel can be pumped into the trunk line to maintain delivery schedules in the event that the trunk line upstream from the terminal is shut down for any reason. Regulating tankage also can maintain pipeline capacity by injecting fuel into the line to make up for that which is being drawn off into storage at that terminal or others. In some cases, regulating tankage is provided along the pipeline route to increase the pipeline operational reliability and efficiency. Figure 5-25 shows an overall schematic of a typical Army fuel distribution system.

Typical requirements for a storage terminal include a capability to provide storage for four types of fuel, transfer fuel between tanks within the terminal, and simultaneously receive fuel from and deliver fuel to the pipeline and to the distribution system.

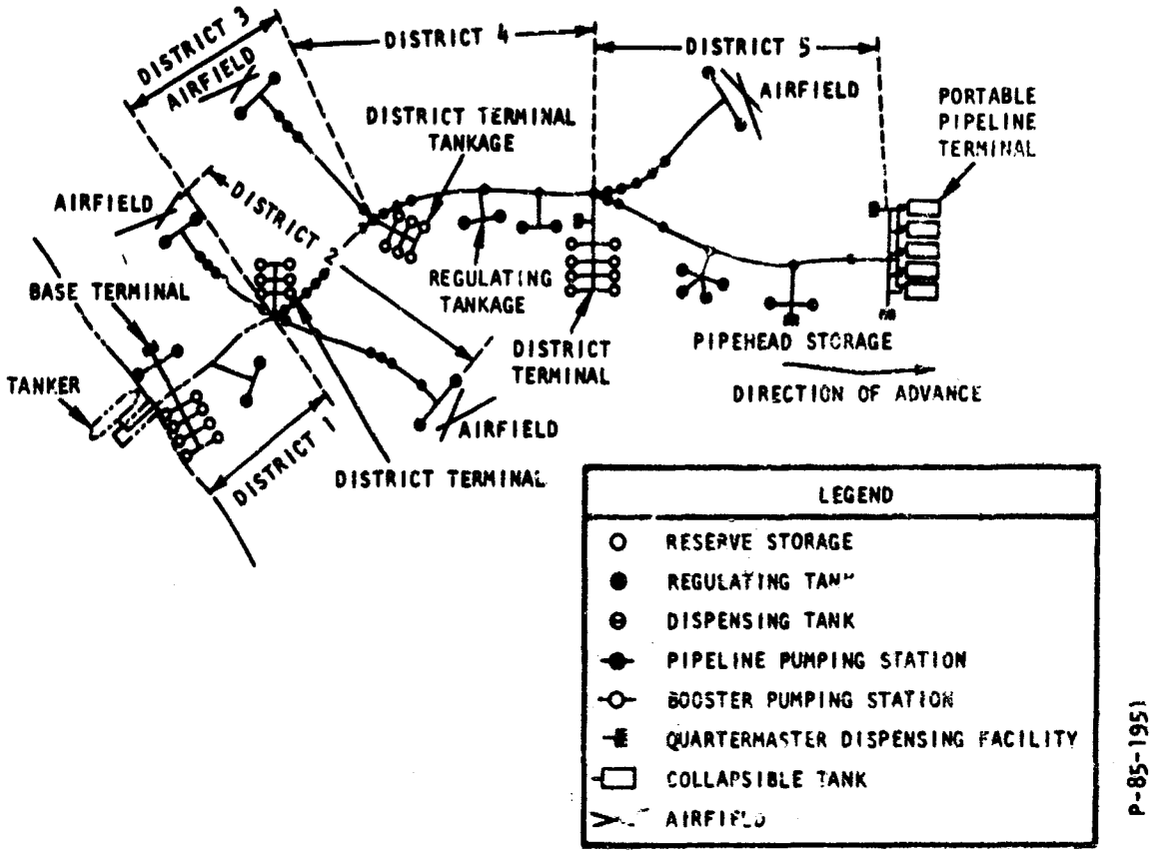

Figure 5-25 - Army Fuel Distribution System

To accomplish the above, it is necessary to use a manually operated complex system of valves and piping referred to as the control switching manifold. For more flexibility, two tanks are sometimes provided for each type of fuel to allow one to receive fuel while the other is delivering fuel.

Another requirement for smooth operation of a storage terminal is to monitor the quantity of fuel in the various tanks. Presently, this is done by a combination of stick gaging and flow metering. The actual quantity in the tank is affected by evaporation losses, temperature, accumulation of sediment and water and inaccuracies in flow measurement (if used) into and out of the tank.

The purpose of this portion of the study was to determine if the fuel storage facility operation could be improved by applying fluidic technology to the control switching manifold and to the gaging of product quantity within the tank.

5.2.2 Tank Quantity Gaging

Army accountability and inventory for fuels is based upon the volume quantities (corrected to 60°F) received and delivered throughout the distribution systems. Therefore, a storage tank gaging system must be sensitive to the corrected volume of product stored.

There are several factors which must be considered in any storage tank gaging approach. They include, temperature stratification within the product, sediment located non-uniformly on the tank bottom, a variable depth of water between the sediment and the product and variation in product specific gravity. Another serious obstacle is the uncertainty in the tank shape and size. This, of course, is especially true for the collapsible storage tanks. The present method is to use a stick-gage, manually inserted into the tank. It is necessary to take several readings of the sediment depth, a measurement of the water depth, at least three temperature readings of the product and ascertain the actual depth/volume relationship for the particular tank being gaged in order to arrive at a corrected volumetric measure of the stored product. There can be a certain amount of fire hazard associated with this procedure if the stored product is measured when it still carries a static charge as a result of being pumped into the tank. Unfortunately, no solution to this requirement was apparent, using fluidic technology.

5.2.3 Automatic Control Switching Manifold

The general requirements for a control switching manifold were mentioned earlier. For purposes of discussion a schematic of a control switching manifold was generated to meet the following specifications:

(a) Transfer fuel between any two tanks within the facility

(b) Receive fuel from the pipeline into any tank

(c) Transfer fuel from any tank to the pipeline

(d) Transfer fuel from any tank to the dispensing station

(e) Simultaneously perform (a), (b), and (d)

(f) Simultaneously perform (b), (c), and (d)

Note that these specifications, while comprehensive, do not provide total flexibility. However, the resultant manifold schematic serves the purpose of illustrating the complexity and provides an insight into the need for automatic operation.

There are two desirable goals for fluidic technology applications to the control switching manifold. One is to use fluidic devices as diverter valves in the flow streams. The other is to use fluidic logic circuits to provide automatic valve selection for performance of the various fuel transfer operations. These circuits can be programmed and combined with suitable flow meters to automatically sequence at preselected values of totalized flow to meet a given delivery schedule.

There are thirty-four valves shown in the schematic of Figure 5-26. Presently, these are manually operated gate or plug valves which normally are either fully open or completely closed. An exception to this is valves 1 and 2 which may be regulating types to adjust the line pressures to meet the system requirements. Operating a manifold automatically at optimum efficiency in some cases requires that valves simultaneously open while others are closing. This is sometimes termed a "flying switch" and is done to reduce the possibility of fuel cross-contamination as well as to increase the system efficiency.

In commercial pipeline systems the valves are operated with electrical or hydraulic drives and the programmers are, almost without exception, electronic or electrical. It is one purpose of this study to examine the possibility of using fluidic jet-on-jet type amplifiers as valves within the manifold. These devices are flow diverters and, as such, they offer very fast switching, no inducement of water hammer and require low power to operate. Unfortunately, they also possess some limitations. An irrecoverable pressure drop occurs through each device which poses a practical limit to the number that can be used in series. Their use would require them to be located so that they discharge above the highest downstream elevation to prevent back flow through the inactive leg. However, it is conceivable that check valves could also be used to prevent backflow. Either approach limits the devices to one-way flow requiring that separate lines and valves be used for opposite flow.

Referring again to the manifold schematic of Figure 5-26, it is not obvious how fluidic diverter valves could be used to replace the entire valve system. There are portions of the manifold which might be converted to fluidic diverter valves. An example of this is the circuit for transfer pump discharge flow to any tank or to the pipeline. Figure 5-27 shows schematically how this might be accomplished. Such a circuit design would require careful impedance matching so that each successive diverter could accept the full flow with no back flooding of the interaction regions of the devices. The pressure recovery/flow characteristics of the diverter are such that each successive diverter would require a larger power nozzle. Designing for a 25 percent pressure recovery for each amplifier would require that the discharge pressure at the transfer pump be higher than the final circuit pressure by a factor of $(4)^4$ or 256. The maximum height of fuel in a 10,000 barrel tank is about 24 feet. This can represent up to 10 psi of back pressure on the final diverter valve. Allowing for an excess of 5 psi for pumping into a nearly full tank, the transfer pump discharge pressure would have to be 15 x 256 or more than 3800 psig. This is obviously much too high a pressure to be practical, and further consideration of fluidic diverter valves does not seem warranted at this time.

The other potential application for fluidics for control of fuel storage facilities is in the logic package for an automated control switching manifold. To use the words of the Army, "from an operating standpoint, the control switching manifold for a tank farm complex is

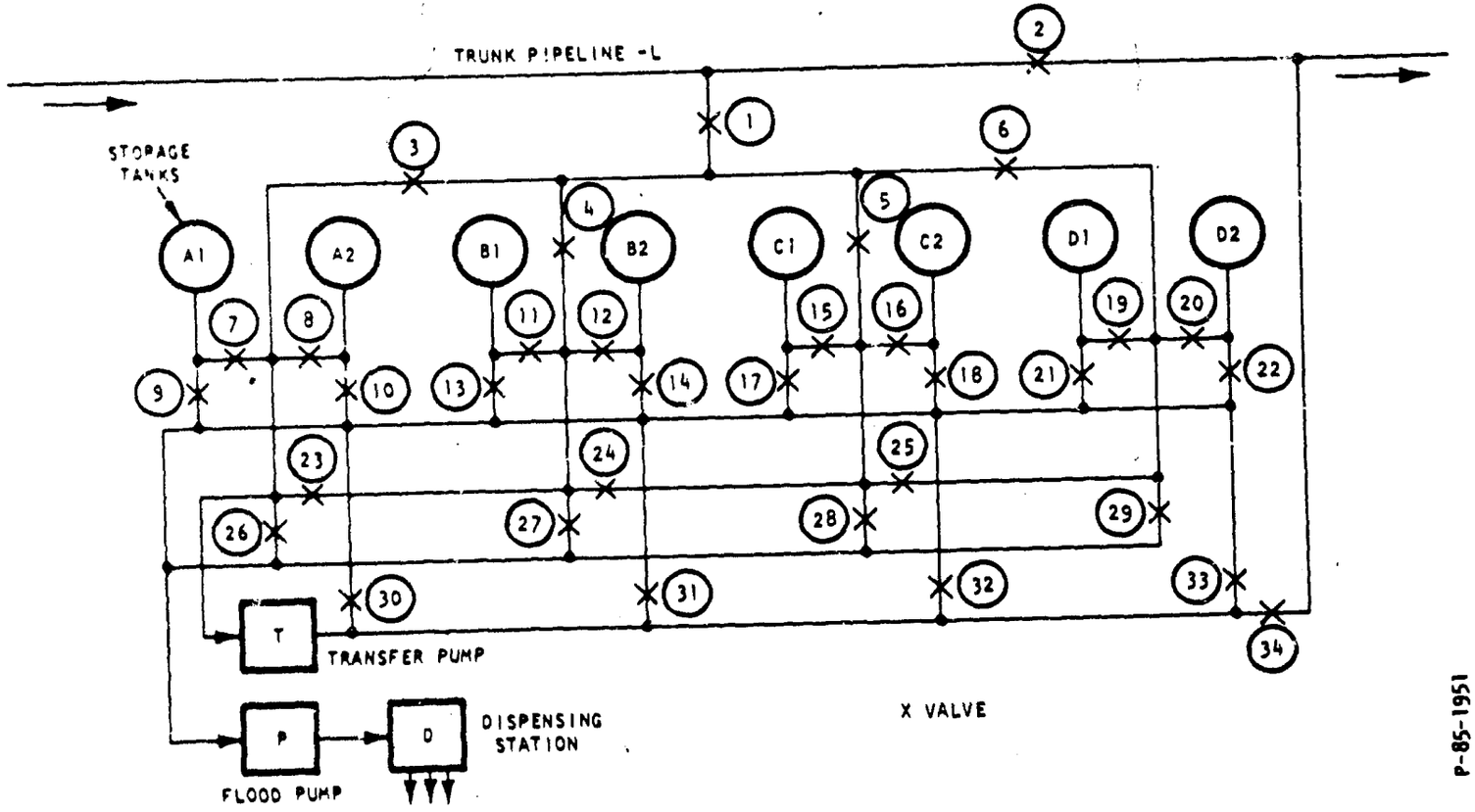

Figure 5-26 - Control Switching Manifold

P-85-1951

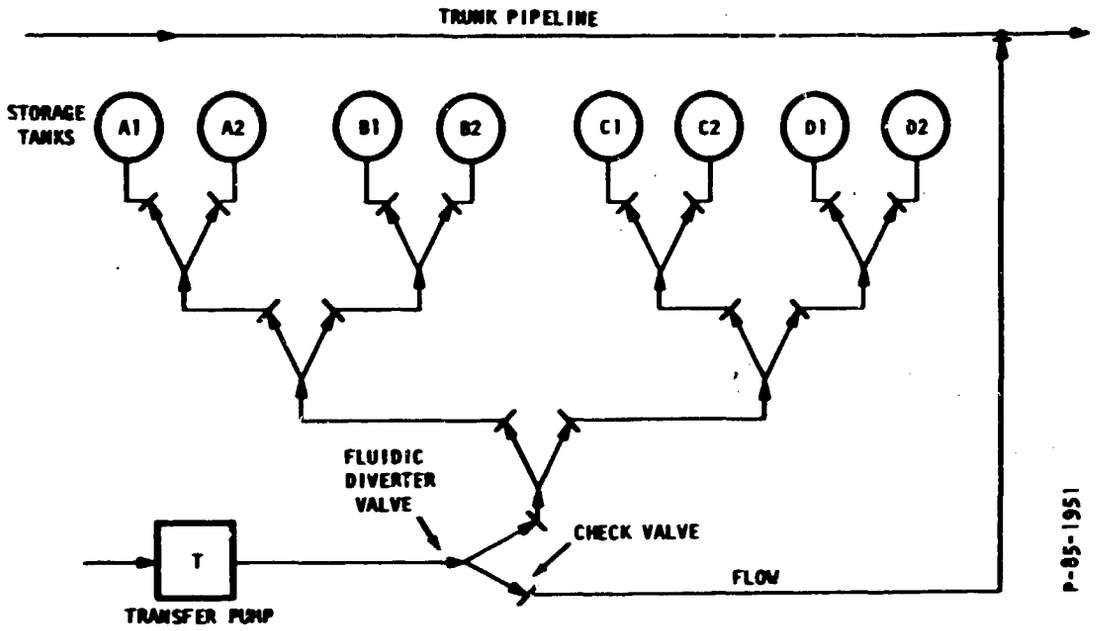

Figure 5-27 - Fluidic Diverter Valve Circuit

one of the most critical installations in the entire bulk supply and distribution system."

The techniques for automating the manifold are not difficult. Almost all commercial installations are automated. The need for automation can perhaps be illustrated by referring to Figure 5-28 which shows just a portion of a "truth chart" for the manifold valving of Figure 5-26. Operations such as shown on line k require adjustment of eight valves — most of which have to be positioned from fully closed to fully open.

To change to a similar but different fuel transfer schedule would require manipulating almost twice as many valves. In addition, there can be critical timing relationships which must be adhered to if contamination and/or system equipment damage is to be avoided.

In designing automated manifolds, various degrees of control can be achieved ranging from simple, convenient pre-programming by hand to automatic real-time computation of requirements and subsequent manipulation of the manifold to meet the requirements.

Three types of components are required for an automated manifold. They are, remotely operated valves, a suitable logic package and a power supply. The typical commercial facility almost exclusively uses readily available line electrical power and, therefore, the valve operators are mostly electrical. Even where electrohydraulic valve operators are used, the hydraulic power is pumped up electrically. Typical electrical valve operators use about two horsepower each and weigh about 150 pounds. Most are designed to fit on existing manually operated vavles.

REQUIRED VALVE POSITIONS

↗	↗	3	4	5	6	7	8	9	10	11	12	13	14	15	16	17	18	19	20	21	22	23	24	25	26	27	28	29	30	31	32	33	34	35	36	37	38	39	40	VALVE NO.

OPERATION

(a) TA1 → A2
(b) TA2 → A1
(c) TB1 → B2
(d) TB2 → B1
(e) TC1 → C2
(f) TC2 → C1
(g) TD1 → D2
(h) TD2 → D1
(i) (TA2 → A1) · PC1
(j) (TA2 → A1) · PA2
(k) (L → D2) · (TB1 → L) · PB2

LOGIC STATEMENT

2 · 7 · 10 · 30
2 · 8 · 9 · 30
2 · 11 · 14 · 23 · 31
2 · 12 · 13 · 23 · 31
2 · 15 · 18 · 23 · 24 · 32
2 · 16 · 17 · 23 · 24 · 32
2 · 19 · 22 · 23 · 24 · 25 · 33
2 · 20 · 21 · 23 · 24 · 25 · 33
2 · 8 · 9 · 30 · 15 · 28
2 · 8 · 9 · 30 · 26
↗ · ↗ · 6 · 11 · 14 · 20 · 23 · 34

T = TRANSFER
P = PUMP TO DISPENSING STATION
L = PIPELINE
↗ = INDICATES A PROPORTIONING VALVE
0 = CLOSED VALVE (IMPLIED WHEN NO LISTING IS SHOWN)
| = OPEN VALVE
PIPELINE IS ASSUMED TO BE ALWAYS FLOWING
· = LOGICAL AND

P-85-1951

Figure 5-28 - Valve Truth Chart for Manifold

Army field installations cannot rely upon having line electrical power available. Power must be generated at or near the point of use. When on-site power generation is required, fluidic technology becomes a candidate for control consideration because, in most cases, valve operators can be made lighter and faster using fluid power rather than electrical power and the power supply itself can be smaller and lighter in weight. Using fluid power for the valve operators makes fluidics a practical choice for the sequencing and logic circuitry.

The type of application here is very similar to that for the sequencing and remote control of an automated pipeline pumping station. The reader is referred to Section 5.1 of this report for a more detailed discussion of fluidic and fluid power control in automated operations.

5.2.4 Conclusions

The scope of this study provides for accurate conclusions regarding the applicability of fluidics to control of fuel storage facilities. However, a detailed analysis and tradeoff study would be required to accurately select fluidic control over other technologies in those areas where it has been concluded that fluidics can be applied.

As a result of this study of two potential control areas in fuel storage; namely, tank quantity sensing and control switching manifolds, it is concluded that fluidics can be applied to the logical control of an automated control switching manifold. It was also concluded that fluidics does not appear to offer any new approaches to fuel storage tank quantity sensing.

There were two potential application areas related to the control switching manifold. These were the use of fluidic devices as diverter valves and as the logic elements in a control package. It was concluded that, in a complex manifold where a flow stream must pass through more than two fluidic diverters in series, the resultant pressure losses would not normally be tolerable.

A pneumatic fluidic logic circuit combined with hydraulically powered valves is concluded to be a strong candidate for consideration in an automated control switching manifold. The reasons for this are drawn mostly from more detailed analyses of this type of package for the automated pipeline pumping station. This is discussed in paragraph 5.1.

5.3 FUEL DISPENSING AND DECONTAMINATION

5.3.1 Introduction and Requirements

The end point of the formal military fuel distribution system in the field is the dispensing of fuel into packaged containers or vehicle tanks.

The dispensing operation includes fuel decontamination which is accomplished by passing the dispensed fuel through a filter/separator which removes particulate and water contaminants.

There are basically three standard dispensing pumps. Their capacities are 50, 100 and 300 gpm. Each may be fitted with a number of fueling nozzles up to a maximum of twelve normally. The pumps are all driven by gasoline engines of suitable horsepower and they are equipped with governors to hold various speeds.

It is fairly typical in military fueling operations to prepare a dispensing station for rapid delivery of fuel by setting the engine to its maximum power point prior to any requirement for discharge flow from the pump. Frequently, because of unforeseen circumstances, the engine pump units run at maximum speed, no-flow conditions for long periods of time prior to and between the fueling operations.

Since this imposes undue strains on the pump and unnecessary wear on the unit as a whole, it would be desirable to control the output of the engine/pump unit in a manner that would provide the desired output when needed and idle the unit when no fueling demand existed. Therefore, it was one requirement of this portion of the study to investigate the applicability of fluidics to control of a dispensing pump.

There are three operations concerned with fuel filter/separators which can reduce the effectiveness of this aspect of the dispensing operation. The first is related to the removal of water from the fuel. This water is allowed to collect in a sump integral to the filter/separator. In the present systems, it can be drawn off manually when the water reaches a predetermined level. On the large capacity units the water can also be dumped automatically on the basis of a predetermined level. However, when the automatic dump control is not required to operate for long periods of time, it occasionally malfunctions. Also, the overall size and weight of the dump mechanism is greater than desirable for best mobility. Thus, one area of investigation was the applicability of fluidics to automatic water dump control.

The second and third areas of investigation are themselves related and concerned the monitoring of fuel cleanliness and the degree of clogging in the filter/separator as it is being used.

Most filter/separators are equipped with pressure gages which indicate the instantaneous pressure drop across the unit. When the ΔP reaches a predetermined maximum safe level, the unit should be taken off stream and cleaned. Meanwhile, in some critical operations, there is a need to quickly replace the clogged unit with a standby unit to minimize the down time. Conceiving of a technique for accomplishing this switch automatically and quickly was the second area of investigation. The third area studied was concerned with the measurement and detection of the degree of filter/separator clogging. Probably the most basic method of monitoring this parameter has been the observation of the instantaneous pressure drop. However, a very serious flaw exists for this technique. Unless a continuous time record is maintained of the ΔP, or unless it is continuously observed, it is possible for the ΔP to become so high that it will cause the elements to rupture, opening up a free

flow path which then allows the ΔP to drop to a relatively low value again. The result is that the filter/separator can pass contaminated fuel without any permanent visible indication of the occurance of an element failure.

Therefore, it is desired to have a monitoring technique that will:

(a) Automatically detect the presence of contaminant particles and free water in the effluent streams

(b) Provide a warning when fuel contamination reaches unacceptable levels or automatically terminate the flow.

(c) Indicate the degree of filter/separator clogging to permit orderly replacement of an on-stream filter/separator.

With the above requirements in mind, the following sections discuss the applicability of fluidics to:

Portable Dispensing Pump Flow/Speed Control

Filter/Separator Water Dump Control

Filter/Separator Degree-of-Clogging Monitor and Control

5.3.2 Portable Dispensing Pump Flow/Speed Controller

A preliminary design study was performed to evaluate the feasibility of several concepts for controlling the speed of a portable dispensing pump to maintain desired flow conditions. Several concepts using more or less fluidic amplifiers were evaluated. In the following discussions two concepts are presented and discussed which are believed to offer feasible and practical solutions.

Both of the concepts use the fuel being dispensed as the power supply for the fluidic amplifiers. Therefore, they are subject to the same Reynolds number considerations discussed for the pipeline pump station control in Section 5.1.2. The two fuels which would most likely cause limited temperature operability are JP-5 which has a kinematic viscosity of 15 centistrokes at -40°F and diesel fuel with a voscosity of 50 centistrokes at -40°F.

5.3.2.1 Flow Demand Speed Controller

This control concept is shown schematically in Figure 5-29. The approach is to sense any demand for flow and accelerate the engine/pump to its maximum throttle position. When flow ceases, the engine/pump is allowed to return to idle speed.

Data furnished by MERDC indicates that, at idle speed with all dispensing nozzles opened, the pump pressure rise can be as low as 1 psid. This pressure is not sufficient to reliably power a fluidic control. Therefore, as will be noted from Figure 5-29, a small

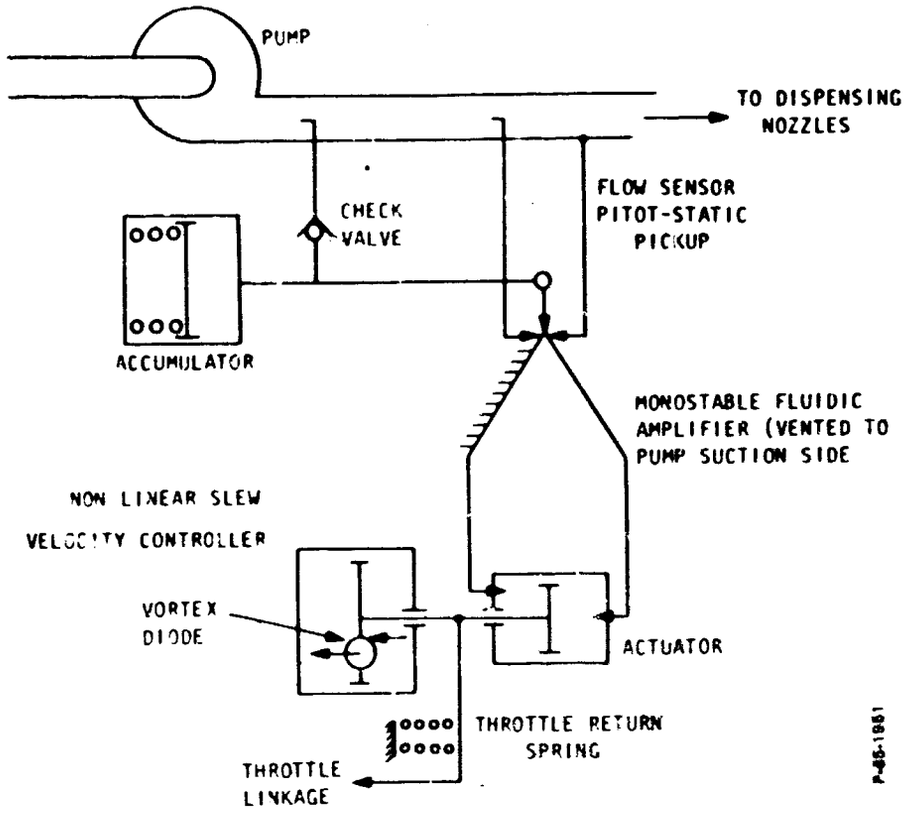

Figure 5-29 - Dispensing Pump Flow Demand Speed Controller

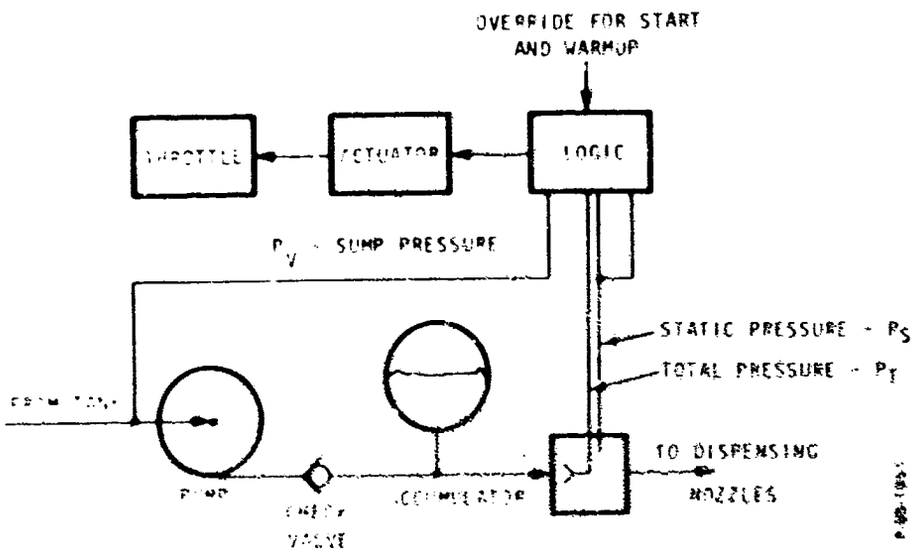

Figure 5-30 - Constant Pressure Dispensing Pump Speed Control

power supply accumulator and check valve are provided to store a higher pressure. For purposes of illustrating the concept, the accumulator size of 180 in^3 was selected to supply the flow demands of the fluidic controller for approximately one minute. This is a conservative approach because the system is designed to advance the throttle from idle to maximum power position in four seconds. The design assumes a minimum normal amplifier operating pressure of 5 psig will be maintained in the accumulator. This pressure is available from the pressure rise across the idling pump under conditions of no flow.

The flow sensor consists of a monostable jet-on-jet fluidic amplifier which is controlled by the pressures obtained from a pitot-static pickup located in the discharge conduit of the pump.

Assuming that eight dispensing nozzles are connected in parallel to the pump output, the flow resulting from opening only one nozzle is sufficient to develop enough control pressure differential to switch the monostable amplifier and generate a power signal to the actuator.

The velocity of the throttle actuator is determined partly by the nonlinear slew velocity controller shown. This is a viscous damper with a fluidic "check valve" or "leaky diode" which will impede the return stroke of the throttle actuator but will allow rapid throttle advances. On a throttle advance the flow through the diode is into the normal vortex outlet and out the normal control port. This will produce no vorticity and, therefore, minimal pressure loss. During a throttle retard the flow is into the control port and out of the outlet. This produces vorticity as a function of flow rate and will thus provide a restrictive flow path and reduce the actuator velocity. The reason for including a one-way viscous damper is to hold the engine at maximum speed momentarily so that an operator can top off a fuel tank by using momentary on-off action of the fueling nozzle without having the engine speed cycle each time the nozzle is opened and closed. It should be noted that this is only a preliminary concept intended to illustrate an approach and that further studies would be desirable to optimize the design.

5.3.2.2 Constant Pressure Speed Controller

This dispensing pump control scheme is based on the premise that it is desirable to have normal system pressure available to the dispensing nozzles at all times. This can be accomplished at engine idle by an accumulator and a check valve in the outlet side of the pump as shown in Figure 5-30. When fuel is drawn from the system, a pitot type flow sensor will transmit a differential pressure signal to the logic block which amplifies the signal and applies it to the throttle actuator which then opens the throttle. During the period that the engine is accelerating to operating speed, the accumulator will provide the required fuel to the vehicle being fueled. When the pump reaches rated speed, the pump provides the necessary fuel flow and recharges the accumulator. When the fuel flow stops, the pitot flow sensor signals the logic unit to drop the engine back to idle. A pressure level signal should also be processed

by the logic block in case the check valve leaks and bleeds down the system. An override may be required to block the logic during engine start-up and warm-up, but the low system pressure will bring the system to rated pressure when the override is released. The logic may be either a liquid or a pneumatic fluidic control. It is possible to use the fuel pump discharge pressure and perform the logic functions with fuel. This would result in an occasional engine run-up to replace the fuel bled from the accumulator and would occur automatically.

The fuel flow through the logic circuit could be returned to the inlet port of the pump. With this system, the engine would be at idle except when flow is requested at the dispensing point and when necessary to maintain system pressure. Note that all the controls would be at the engine-pump unit which may be remote from both the storage tank and the dispensing point.

The logic circuit for this system is somewhat more complex than for the flow demand logic presented in paragraph 5.3.2.1. However, this is partly offset by the elimination of any requirement for a viscous damper on the throttle actuator.

Figure 5-31 shows the fluidic logic required for the following functions:

(a) accelerating the engine upon flow demand

(b) accelerating the engine upon output pressure demand

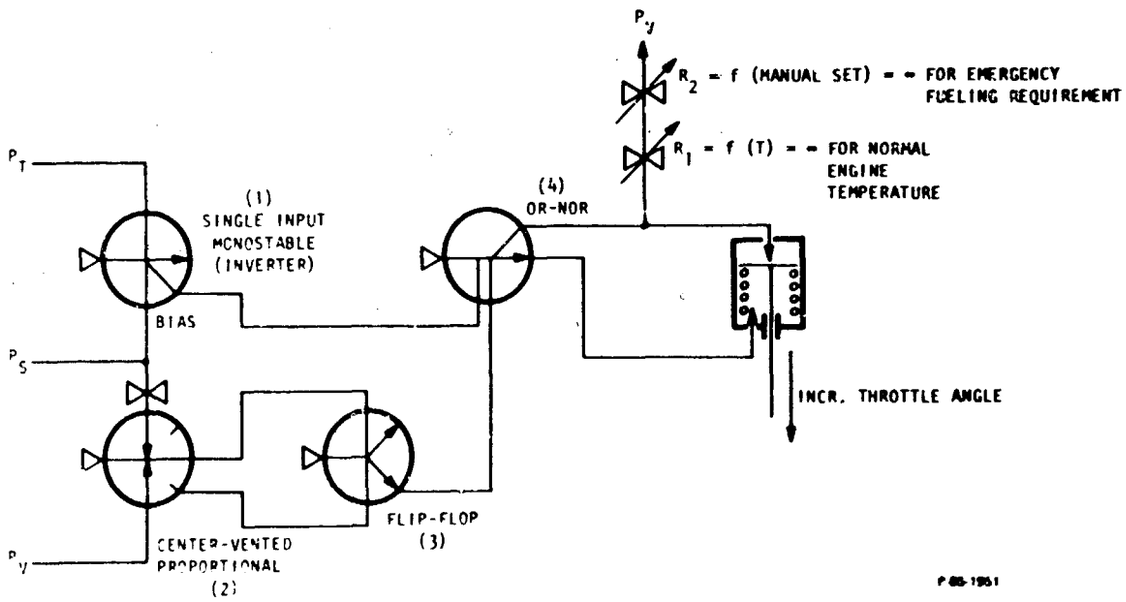

Figure 5-31 - Fluidic Logic for Constant Pressure Dispensing Pump Speed Control

(c) returning the throttle to idle for start and in case of loss of pressure in the control

(d) providing an override to allow warm-up before accelerating the engine

The first function, (a), is satisfied by the action of the static pressure P_S and the total pressure, P_T. When no flow demand exists, $P_S = P_T$ and monostable amplifier (1) output is vented. When a dispensing nozzle is opened, the static pressure decreases below the total pressure and amplifier (1) switches. This results in a control signal to the OR-NOR amplifier number (4) and its switches. The outputs of amplifier number (4) are applied differentially to the throttle actuator, and when amplifier (4) switches from its normal state, the throttle is advanced to its maximum position. When flow stops, the reverse action occurs and the throttle returns to idle. Since the accumulator was recharged while at maximum throttle, any minor flow demands after the engine return to idle will not cause the engine to cycle back to maximum speed.

The second function, (b), is satisifed by proportional amplifier (2) and bistable amplifier (3). Amplifier (2) output is normally set so that it provides a control signal to amplifier (4) and switches it to the vented output. Normal means that P_S is at maximum pressure. As P_S decays due to the flow requirements of the amplifier or if the check valve should leak, the output of amplifier (2) will issue from the center vent and apply a control signal to amplifier (3) causing it to switch. When this occurs, amplifier (3) output will furnish a control signal to amplifier (4) and it will switch to the condition demanding maximum throttle position.

As soon as the accumulator is recharged to normal P_S, the normal output of amplifier (2) will come back on and remove the signal to amplifier (3). This, of course, causes amplifier (4) to return to its normal output and the engine goes to idle.

The spring shown in the actuator, or the present throttle return spring, will satisfy function (c) by returning the throttle to idle if control pressure is lost and it will hold the throttle at idle during a start.

Function (d) can be satisifed by including the temperature variable restrictor, R_1. This orifice would keep the output of amplifier (4) low until engine temperature was normal. A second orifice, R_2, is included to provide an operator with the option of going to maximum pump speed any time prior to full engine warmup. By simply closing R_2, the engine will accelerate to maximum speed because of the low value of P_S and the subsequent action of amplifier (2) in the logic circuit as explained above.

5.3.2.3 Conclusions

It is concluded that, within the present Reynolds Number limitations, fluidics can be applied to the speed control of portable, fuel dispensing pumps by using the dispensed fuel as the power supply to the control.

Through the proper amplifier design, Bendix expects to reduce the present minimum operational Reynolds number. This would remove most or all of the present limitation for the military fuels used and the temperatures expected.

5.3.3 Filter/Separators

5.3.3.1 Water Dump Control

Automatic control of the water sump in a filter/separator presently includes a provision to reduce the fuel flow rate through the unit when the free water content of the fuel is so high that normal water dump discharge rates cannot keep up with the influx of water in the contaminated fuel. The normal discharge rate specification calls for a flow capacity equivalent to 10 percent of 125 percent of rated flow for the filter/separator at a pressure of 30 psig. This amounts to 75 gpm of water for a 600 gpm unit. The provision for reducing the fuel throughput provides for handling water slugs at flow rates above 75 gpm.

The present technique for water dump control typically includes a float which will float only in water. Attached to the float is a needle valve which, during translation uncovers ports in a sleeve. The first port uncovered allows simple draining of water from the sump through the port to atmosphere. The next port uncovered provides a pressure signal to open the water dump valve. This will discharge water at a much higher rate. Finally, uncovering a third port will signal a flow control valve located at the unit outlet to close. This, of course, is to handle large slugs of water.

Before discussing how fluidics might be applied to filter/separator operations, it is important to consider that a basic limitation appears to exist to the useful application of fluidics to control of functions in or around filter/separators. This limitation is the location of a suitable power supply. The amplifiers flow continuously in performing their function and, therefore, need a source and a sump for flow. The obvious and only practical source is the inlet flow to the filter/separator and the sump is the outlet flow. There are two problems with this approach. The first is that the available ΔP may only be 2 or 3 psi across a clean filter/separator. Actually, this is sufficient under most conditions, but if the fluid happens to be diesel fuel at low temperature, the Reynolds number in the amplifier may become too low to maintain adequate performance, as discussed earlier. The second problem is the fact that the inlet fuel may be contaminated. Since it must pass through the amplifiers and then to the outlet, it must be processed similarly to the main stream flow. This can be done. It would require that the amplifier flow be passed through a separate filter separator which had sufficient capacity relative to the amplifier circuit flow rate to keep the ΔP across the special filter/separator normally negligible.

Assuming that practical solution to the power supply limitations could be obtained, a fluidic circuit was devised to sense

the water level in the sump and operate a dump valve to keep the water level within acceptable limits. Figure 5-32 shows the circuit schematically. The principal advantage offered is the elimination of parts having relative sliding contact and thus eliminating the possibility of such parts sticking or rusting in place. Explanation of the operation of the fluidic level control is aided by reference to the sequential truth chart accompanying Figure 5-32. Starting with a low water level, monostable amplifiers A and B outputs are both from their normal sides (hash marks). Thus, bistable amplifier C is set to provide a "0" output which, applied to a suitable hydromechanical valve, would aid a spring to hold it closed.

A float in chamber (a) which is designed to float only in water, rises with the water until it closes the orifice a_1. This creates a control signal which switches amplifier A. However, this has no net effect as amplifier C remains set to its "0" output. When the water level rises further, a similar float in chamber (b) closes orifice b_1. This switches amplifier B and, in turn, resets C to its "1" output. This action directs the valve to open to drain the sump. As the water level falls, the float in chamber (b) falls away from orifice b_1, allowing B to return to its normal output. However, this has no net effect as the bistable, C, remains at its "1" output. When the water level falls sufficiently to allow orifice a_1 to open again, amplifier A returns to its normal output, sets C to its "0" output and closes the valve.

5.3.3.2 Degree-of-Clogging Monitor and Control

The principal reason for obtaining this parameter is to provide for an orderly switch to a clean filter/separator to allow replacement of elements in the clogged unit. The switch is done manually now but future requirements may be for automatic switching. Auto switching would help to eliminate any possibilities for operating a filter/separator which has experienced an undetected ΔP sufficiently high to have caused the filter elements to rupture.

For detecting a pressure drop and displaying it, or even preserving an excessive ΔP reading for alarm purposes, it was concluded that some standard form of pressure gage could be used to much better advantage than a fluidic device. A fluidic logic circuit was devised which would detect when a filter became clogged, and sequence the necessary valves to place a clean unit on stream and take the clogged unit off stream. This circuit can be explained by looking at system requirements.

Figure 5-33 shows schematically how a switching or transfer manifold might appear. The two main stream filter/separators are labeled A and B and the isolating valves are numbered 1 through 4. In steady state operation either valves 1 and 2 or 3 and 4 would be open but not both combinations. If A is on stream and ΔP_A reached a predetermined maximum safe value, a logic circuit would perform the following sequential valve operation: Open 3, open 4, close 2, close 1. A similar sequence would be used to transfer from Unit B to A: Open 1, open 2, close 4, close 3.

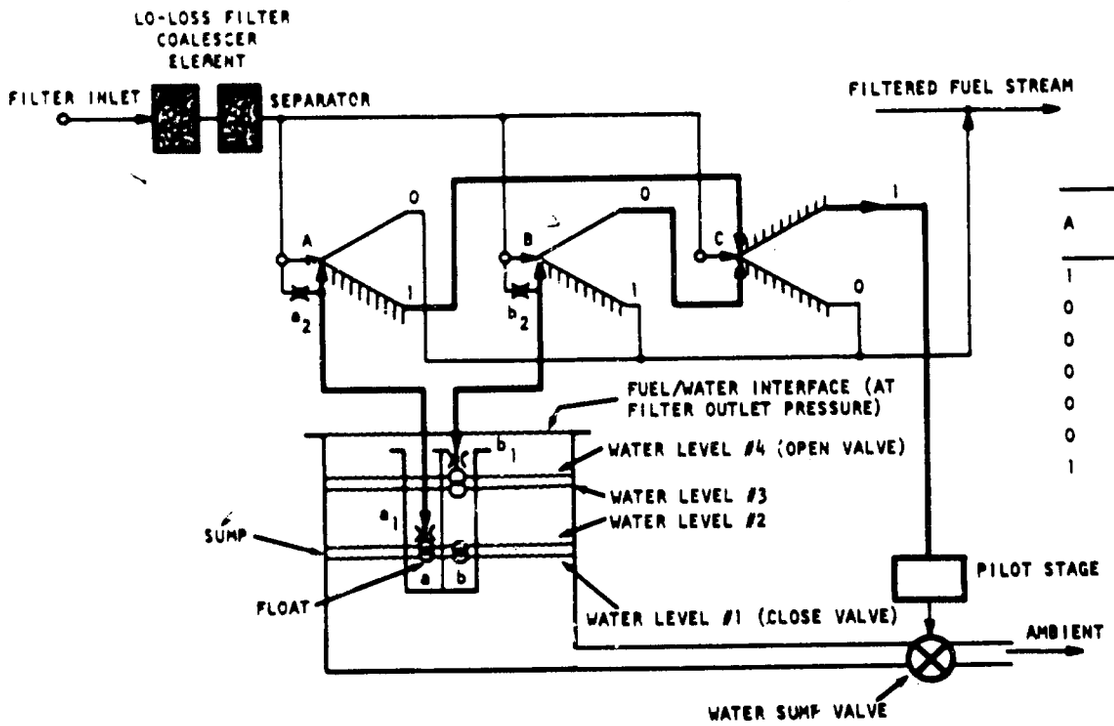

TRUTH CHART

A	B	C	WATER LEVEL	WATER DIRECTION
1	1	0	1	↑
0	1	0	2	↑
0	1	0	3	↑
0	0	1	4	↑
0	1	1	3	↓
0	1	1	2	↓
1	1	0	1	↓

Figure 5-32 - Fluidic Water Dump Valve Control

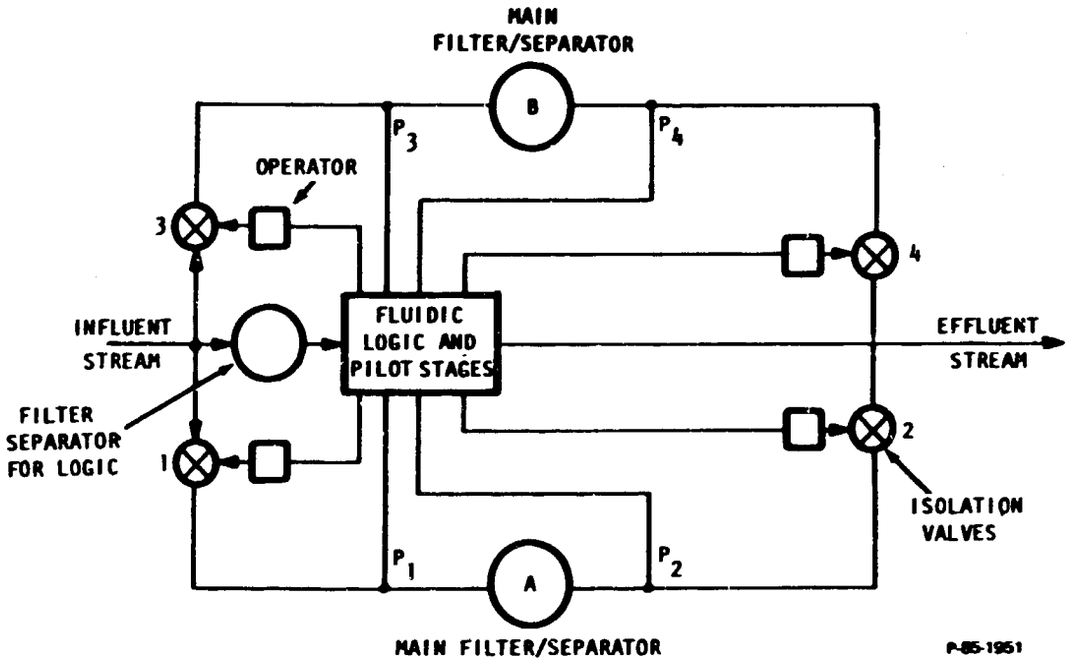

Figure 5-33 - Transfer Manifold for Continuous Filter/Separation

With a general idea of the system circuitry and sequencing requirements, consideration can be given to implementation. First, a power supply is required for the isolating valves. It is possible, through the use of four-way pilot stages, to provide automatic valves which are powered with the stream fluid. However, the venting of the power chambers would necessarily have to be to atmosphere in order to develop sufficient forces. This is because of the low ΔP available when the filter/separators are clean. This might not be too serious a limitation because the valves normally do not sequence frequently. There still remains the question of where to obtain the power for the pilot stages and the logic.

If a small separate filter/separator unit were provided for the flow requirements of the logic and pilot stages, and it were sized to minimize its ΔP when clean, it should be possible to power the fluidic logic and pilot stages with the main stream fluid.

Assuming that the Reynolds Number limitation at low temperatures could be resolved, it is only a matter of designing a suitable logic circuit to implement the automatic transfer control for the

filter/separators. The logic statements would probably take the following form:

(1) Unit A on stream and ΔP_A reaches the maximum safe limit

(a) OPEN 3 IF $1 \cdot 2 \cdot \bar{4} \cdot P_A$

(b) OPEN 4 IF $1 \cdot 2 \cdot 3$

(c) CLOSE 2 IF $3 \cdot 4 \cdot P_A$

(d) CLOSE 1 IF $3 \cdot 4 \cdot \bar{2} \cdot P_A$

(2) Unit B on stream and ΔP_B reaches the maximum safe limit

(a) OPEN 1 IF $3 \cdot 4 \cdot \bar{2} \cdot P_B$

(b) OPEN 2 IF $3 \cdot 4 \cdot 1$

(c) CLOSE 4 IF $1 \cdot 2 \cdot P_B$

(d) CLOSE 3 IF $1 \cdot 2 \cdot I \cdot P_B$

Fluidic logic for this sequence would require approximately twenty-five amplifiers. The ΔP would be sensed with fluidic jet-on-jet proportional amplifiers. The high ΔP information would be stored using fluidic bistable amplifiers and the remainder of the logic would be NAND-NOR. This estimate includes fluidic pilot stages. It may be more practical to use interfacing elements as pilot stages to obtain faster response with lower circuit flows. Figure 5-34 is a functional schematic of the transfer control. The NAND logic would actually require about twice as many amplifiers as the number of symbols shown since three is the present reliable maximum number of signals which can be combined in a single amplifier. The implication of the diagram is that the bistable amplifiers numbered 1 through 4 would act as pilot stages of the valves. When the valve reached full excursion, the output pressure would rise and provide the signal which continued the logical valve sequencing. In practice, it may be more desirable to use hydromechanical pilot stages positioned by the bistables. Then when the valves reached full excursion, it would be necessary to develop an indicating signal to continue the sequence.

If further detailed analysis concluded that using the main stream fluid for the logic and pilot stage power was unfeasible, then the alternative is to provide a separate power supply. This is certainly worth consideration if automatic transfer of filter/separators becomes an important operational requirement.

With the provision of a separate power supply, this control problem is relatively straightforward. The circuit shown in Figure 5-34 would still be applicable. If a pneumatic source were used, then an interface is necessary for the input signals, ΔP_A and ΔP_B. However, the power supply could use the main stream fluid by drawing from the filter/

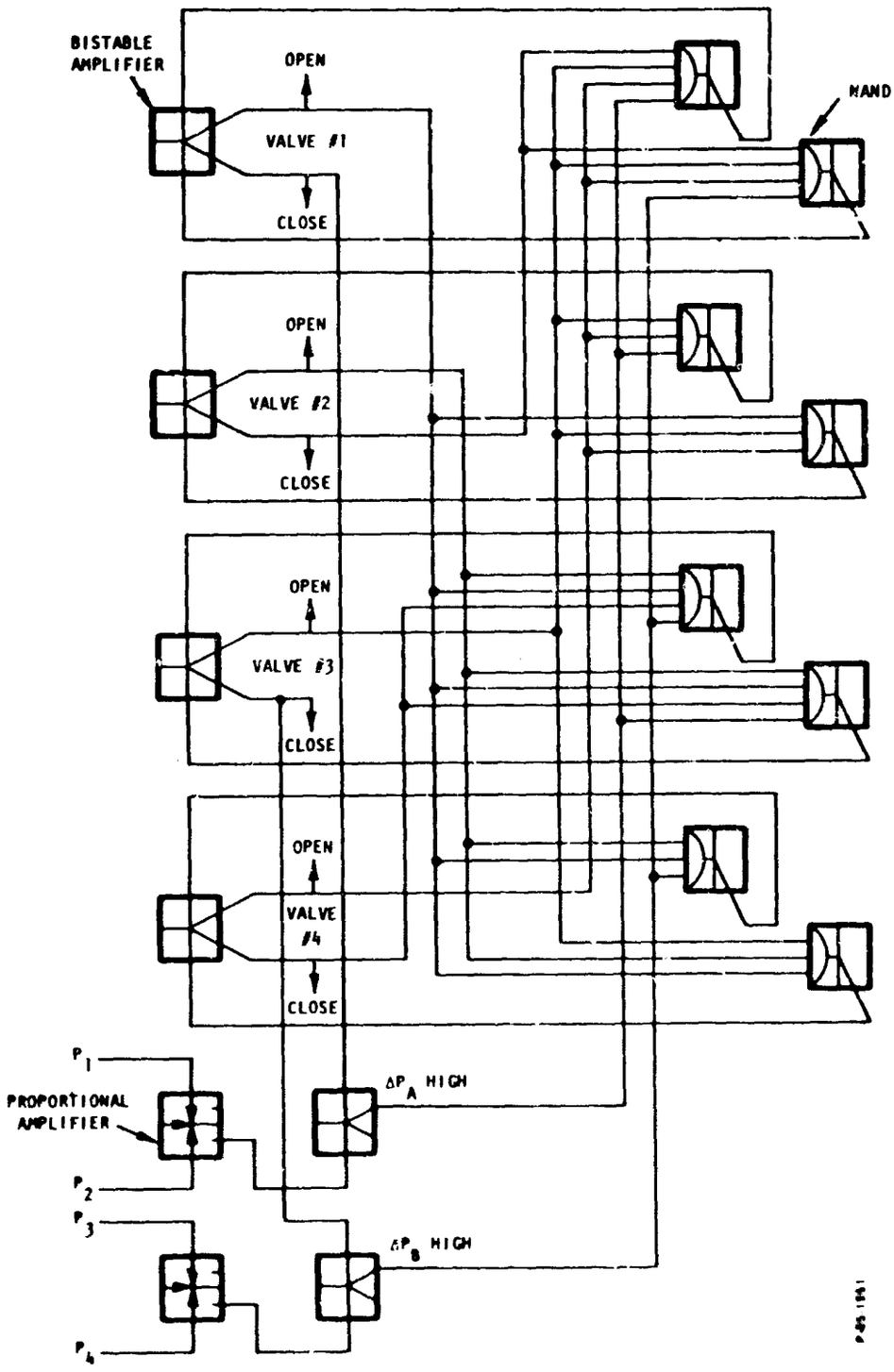

Figure 5-34 - Filter/Separator Transfer Control

separator discharge side (clean fuel), pumping up to a pressure high enough to:

(a) operate the pilot stages and valves

(b) assure a sufficiently high Reynolds number,

and then return the control system flow to the main stream.

Twenty-five amplifiers with 0.02 inch by 0.04 inch power nozzles at 150 psi pressure drop would require less than 3/4 horsepower and a flow rate of about 7.5 gpm to operate.

If this magnitude of flow is objectionable, it would be a simple matter to reduce the flow to zero until such time as the ΔP began to approach the maximum safe level. This could be accomplished with the use of a fluid switch similar to that developed for the closed-connect fueling device (refer to section 4.0). This switch can sense a pressure drop and open a valve to supply the circuit only when control action is imminent. Of course, the first step would be to provide a signal to start the auxiliary power unit on the basis of a pre-determined ΔP.

5.3.3.3 Conclusions

The water dump control, by itself, is concluded not to be a practical application of fluidic technology. This is based on the minimal pressure drop available to the amplifiers and the resultant Reynolds number limitation for cold temperature operation with the higher viscosity fuels. It would not appear to be practical to provide a separate power supply for the fluidic water dump control. The fluidic control for automatically switching between filter/separator units is also subject to Reynolds number limitations. However, it is concluded that this control operation may warrant the use of a separate power supply such as was suggested above. In addition, if further study proved the feasibility of providing a separate power supply for the automatic switching control, then it would become feasible to reconsider using the fluidic water dump control. This would be used mostly on the larger filter/separators and the automatic switching control would probably only be used on the larger units. Thus, if a power supply is available, it can be used to power the water dump control as well as the automatic switching control.

5.4 INTERFACE DETECTION

5.4.1 Introduction and Requirements

Interfaces are the batches of fuel within the pipeline which result from the co-mingling of two different types of fuel adjacent to each other. Batches of different fuels are normally pumped through the pipeline in series with no physical barrier between them. This is a standard procedure commercially and in the military. If the flow is maintained turbulent (which it usually is), the co-mingling is minimized.

A typical interface batch may consist of 200 to 500 barrels of fuel. The size depends upon the transport distance, the time in transit, the fuel types and, as mentioned, the flow conditions.

The interface normally only has to be handled at the pipehead. When fuel is withdrawn along the pipeline route into storage, the cut is taken from the heart of the fuel batch that is drawn off.

Normally, the fuels are pumped in a sequence of: av-gas, mo-gas, JP-4, kerosene and diesel fuel. The sequence can also be reversed. Basically, an attempt is made to protect the critical products and to generate interfaces which can be utilized efficiently. However, there is no guarantee that this pumping sequence will always be used.

The products are protected by making the cut at the pipehead either before or after the arrival of the interface depending upon the sequence of arrival. For example, in the above sequence, the switch is made from av-gas to mo-gas prior to the arrival of the interface. Between mo-gas and JP-4, it is made after the arrival of the interface. An exception to this is the interface between kerosene and diesel fuel. Here the cut is made at the interface midpoint. The midpoint refers to the point in the interface where the A.P.I. gravity has reached a value midway between the gravities of the two adjacent unmixed products.

Interface detection is presently accomplished by sampling the flowing product at regular time intervals to note color and/or A.P.I. gravity changes. The sampling begins just prior to the predicted arrival of the interface. The pipeline temperature must also be noted in order to better recognize the products since their gravities change with temperature. Figure 5-35 shows specific gravity versus temperature for petroleum products including those primarily used by the military.

Presently, the sampling process is done manually at a location in the pipeline that provides about 15 minutes to prepare to make the necessary cut or switch. The requirement for this study is to conceive of essentially fluidic techniques which can at once show a potential for simplified operation when done manually and reliable, repeatable and accurate performance when included in a control system for automatic interface detection and manifold manipulation.

5.4.2 Useful Phenomenon for Interface Detection

The fuel interface in a pipeline can be detected by networks of laminar and orifice type restrictors. Orifices have different flow pressure characteristics than laminar restrictors, and this difference can be utilized to detect the passage of an interface past a measuring point in a pipeline.

Orifice flow for liquids,

$$Q_o = C_d A \sqrt{\frac{2g}{\rho}} \sqrt{\Delta P} \qquad (1)$$

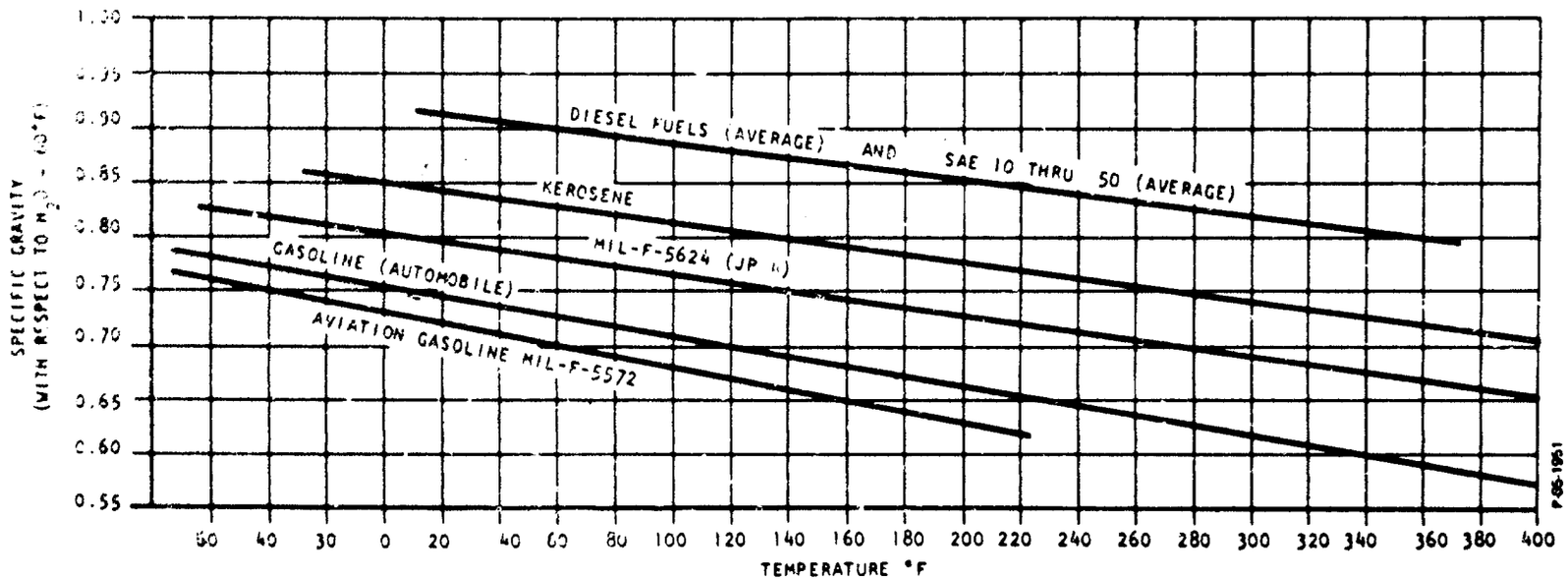

Figure 5-35 - Specific Gravity of Typical Hydrocarbon Fuels

as given in equation (1) is related to the square root of pressure drop and density of the liquid but is independent of the viscosity. On the other hand, laminar restrictor flow,

$$Q_\ell = \frac{d^2}{32\ \mu\ \ell}\ A\ \Delta P \tag{2}$$

as given in Equation (2) is linearly related to the pressure drop and the viscosity of the fluid.

For the five principal fuels used by the military, the kinematic viscosities vary with temperature to about the same degree (Figure 5-36). That is,

$$\nu = At^x \tag{3}$$

where

ν = centistokes

t = °F

A = constant (varies for the fuel)

and the exponent, x, is [illegible] for all the fuels. Laminar flow is a function of the fuel [illegible] viscosity, μ, which is related to ν by

$$\mu = \frac{\nu}{\rho} \tag{4}$$

Figure 5-35 shows that the variation of fluid specific gravity (or density) is a linear function of temperature and that the slopes of the curves are nearly equal for the military fuels. Thus, it can be expected that the fuel dynamic viscosities will remain in the same temperature relationship as their kinematic viscosities, and no crossovers will exist where two fuels can have the same viscosity at the same temperature.

There still remains the possibility that two adjacent fuels in the pipeline would be at sufficiently different temperatures that their viscosities would be so nearly alike as to obscure the interface for a detector which was sensitive to viscosity.

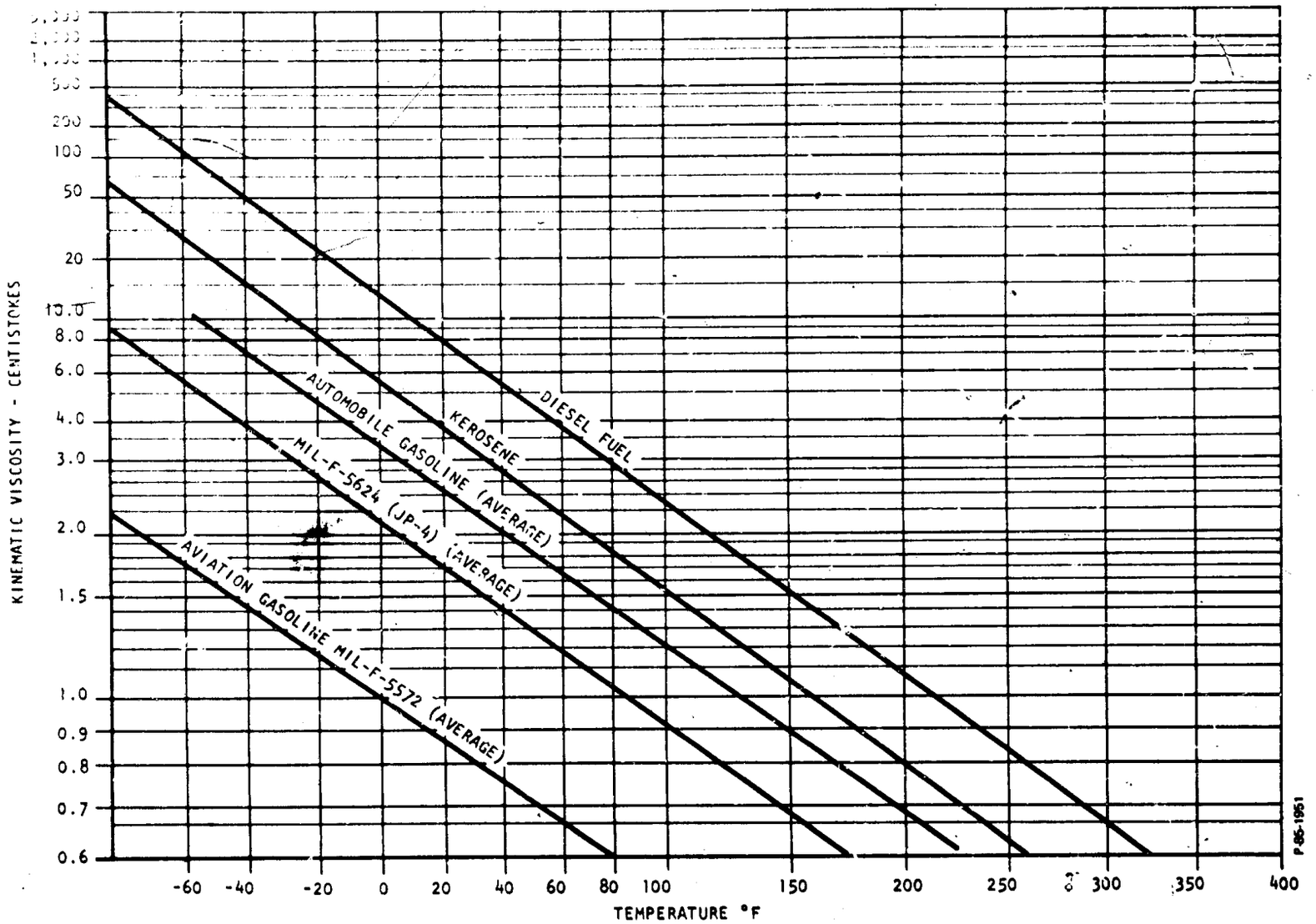

Figure 5-36 - Viscosities of Typical Hydrocarbon Fuels

The likelihood of such an occurance is hard to conceive of because the mixing or co-mingling process itself is one of heat as well as molecular exchange. Thus, the interface batch would be expected to exhibit essentially constant temperature or, at the most a uniform temperature gradient of small slope.

Referring again to Figure 5-36, it will be noted that the scale compresses as temperature reduces. (Viscosity charts such as this do not use true logarithmic scales.) Thus, at lower temperatures, the temperature span along a constant viscosity line is less than for higher temperatures. Even so, the closest that any of the fuels of interest approach each other is equivalent to at least a 30°F temperature difference. Table 5-2 indicates the approximate temperature span between any combination of fuels at low temperatures.

5.4.3 Passive Bridge Interface Detector

A simple bridge network of laminar and orifice type restrictors combined with an inlet flow control and a form of differential pressure indicator as shown in Figure 5-37 can be used for interface detection.

The basic bridge circuit can be used to detect changes in either density or viscosity or a combination of fluid properties. Temperature compensation of the bridge can be accomplished by using a temperature controlled orifice. This basic circuit with a temperature compensation orifice has been used as an absolute pressure sensing circuit on gas. For a more complete description of this application that included both analytical and experimental evaluation, see Appendix A. This background in the design of a orifice-laminar bridge circuit would be useful in a design of a fuel interface detector circuit.

Because an interface detector is required to operate with several fuel combinations and over a range of operating temperatures, a detailed nonlinear analysis would be necessary to select the best combination of orifices and laminar restrictors and operating conditions. The following discussion outlines alternatives available to this concept that require detailed evaluations.

In equations (1) and (2), the fluid density ρ and viscosity μ are unique functions of temperature for a given fuel. Temperature compensation thus may not apply equally well to various fuel interfaces. An alternate solution is to control the temperature of the interface detector. The heat source may be a battery powered self-contained heater, or, if the detector is located near to a pump installation, for example, the engine cooling jacket could be used.

The gain and sensitivity of the interface detector depends on the input flow. A simple flow control valve and a ball-in-tube flow meter combination would be a satisfactory and inexpensive inlet flow controller and indicator.

The output indicator may be any pressure indicating device such as a U tube or a inclined-tube manometer. These offer non-varying

Table 5-2 - Temperature Approach at Constant Viscosity

	AV-GAS	MO-GAS	JP-4	KEROSENE	DIESEL
AV-GAS	0°F	110	80	145	175
MO-GAS	110	0	30	30	65
JP-4	80	30	0	55	95
KEROSENE	145	30	55	0	35
DIESEL	175	65	95	35	0

TEMPERATURE SPAN BETWEEN FUELS AT COLD TEMPERATURES AND ALONG CONSTANT VISCOSITY LINES.

P-85-1951

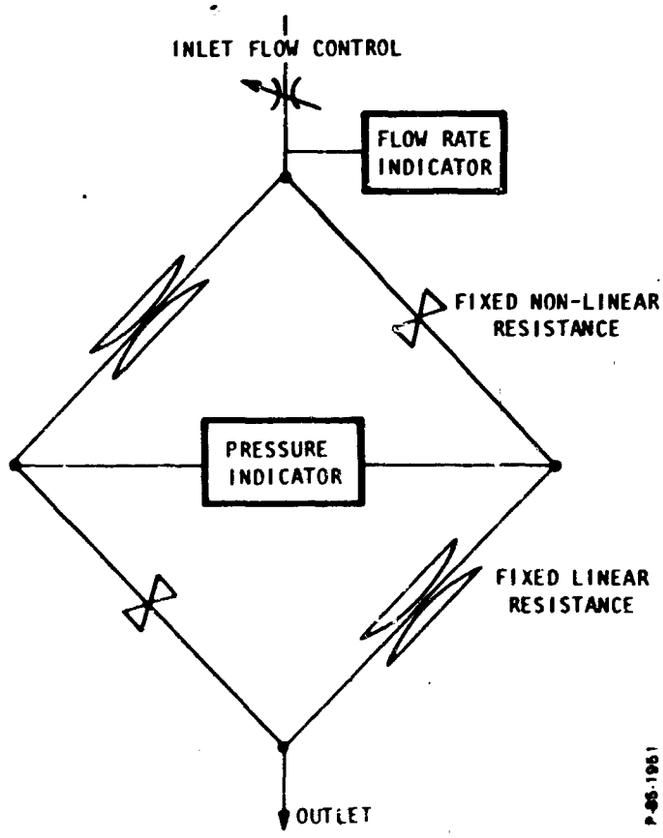

P-85-1951

Figure 5-37 - Fuel Interface Detector Using Bridge Circuit

calibration and, hence, consistent results. The selection would depend on the maximum flow rate through the device. Several factors must be considered on the basis of a detailed evaluation before an intelligent choice of flow rate could be made. As flow rate through the interface detector is increased, the time required to obtain the correct indication (the dead time of the instrument) is reduced. However, as flow rate is increased, the energy required to maintain temperature in the constant temperature operating mode is increased and may become excessive. On the other hand, if temperature compensation of the unit is found to be practical, the heating factor is eliminated. Both the U tube and the inclined tube manometer could be furnished with a calibration indicating directly the percentage of the mixture of the various fuel interfaces under consideration.

This concept of interface detection is applicable to manual as well as automatic control. The output pressure differential can be transduced into suitable form for either fluidic or electronic control systems and used as an input to a logic circuit. The detector flow throughput disposal would depend upon the installation circumstances. In manual operation, the throughput could be disposed of in whatever manner that is now used for disposal of the samples drawn off for A.P.I. gravity readings. In automatic installations, the flow throughput can be minimized by only allowing flow during the period of time needed for interface detection. This would be easily accomplished by a remotely operated inlet or discharge valve. The throughput may be directed to a local sump for later disposal.

Only a minimal pressure drop is required across the bridge; therefore, the output flow could easily be re-inserted into the pipeline if a restrictor were installed immediately downstream of the bridge circuit. A typical ΔP which would be required by the bridge circuit is on the order of 1 or 2 psid. A gate or plug valve would only have to be slightly closed to develop this amount of pressure drop at capacity flow in the pipeline. This is probably the simplest approach for manual operation of the bridge. Figure 5-38(a) shows this schematically. For automatic interface detection and flow manipulation, a regulating restriction would be required to maintain the pressure drop within limits regardless of the flow rate in the pipeline (Figure 5-38(b)).

5.4.4 Fluidic Jet-on-Jet Interface Detector

A fluidic, jet interaction, proportional amplifier can be designed to be sensitive to changes in fluid viscosity by including a laminar restrictor in the control flow circuit. Figure 5-39 shows this schematically. For a given geometry, P_R, the receiver or output pressure will be proportional to P_S, the supply pressure and the control pressure, P_C. For constant values of P_S, the different flow/pressure reltionships for the supply and control circuits will cause the supply fluid jet to be deflected in proportion to changes in the fluid viscosity. The parallel flow through variable orifice R is provided to compensate for viscosity changes due to temperature effects. By making orifice R a function of

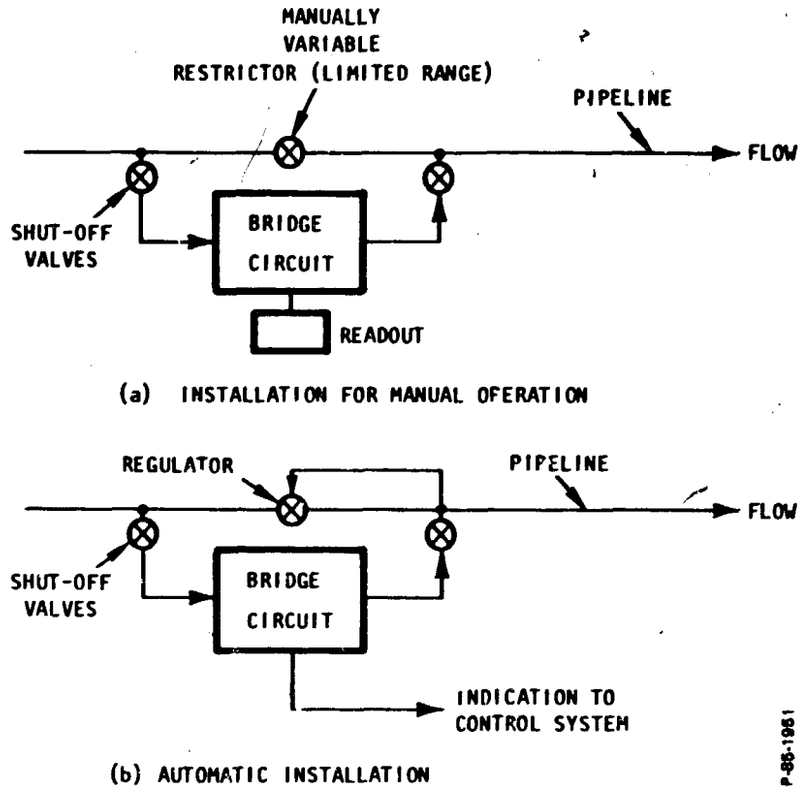

Figure 5-38 - Interface Detector With Zero Flow to Ambient

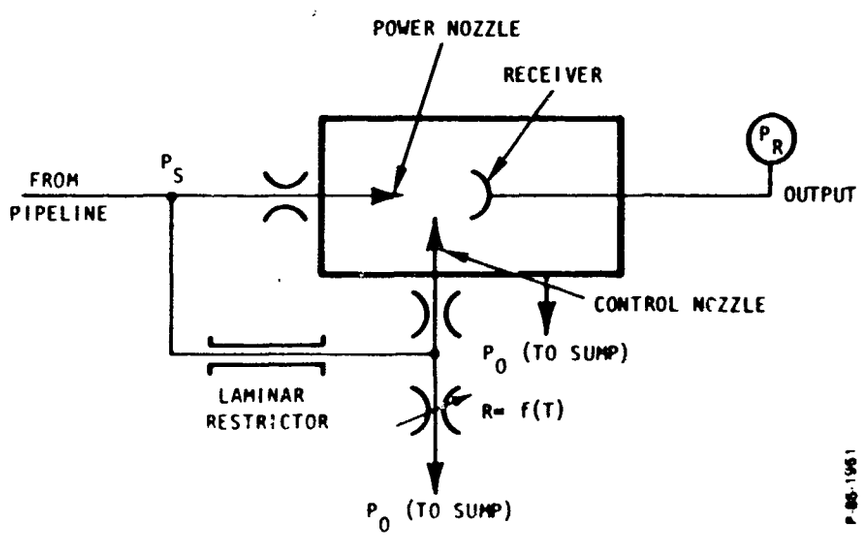

Figure 5-39 - Fluidic Jet-on-Jet Interface Detector

temperature, the null point for the detector can be maintained and any output pressure change will be only a function of the type of fluid flowing through the detector.

It is necessary to maintain a constant P_S because if the supply pressure is allowed to vary there will be two effects on P_R. First, for a constant viscosity and temperature, the output pressure will change with P_S because P_R is a function of the recovery characteristics of the amplifier and the supply pressure (for a fixed output load). Secondly, the jet deflection will change because of the differing flow/pressure relationships for the supply and control circuits. Therefore, it would be necessary to regulate the supply pressure or the overall pressure drop in order to avoid these effects.

A breadboard fluidic viscometer was fabricated and tested by the Bendix Research Laboratories. Data were obtained over a limited viscosity range. The output change was linear and had a gain of 0.124 psi/1 percent change in viscosity at 50 psig supply pressure and a gain of 0.280 psi/1 percent change in viscosity at a supply pressure of 100 psig. It is important to note that the inside diameter of the laminar restrictor for these tests was identical with the amplifier control and supply orifices sizes. Therefore, dirt insensitivity should be equally as good as the standard fluidic amplifiers. These data are shown in Figure 5-40.

Application of this device to manual operation would be similar to that of the passive bridge detector. The principal difference between the two techniques is that the excess flow through the jet-on-jet detector (vent flow) is at atmospheric pressure and cannot be injected back into the pipeline.

5.4.5 Conclusions

Both of the interface detectors discussed above have good potential. Both have been developed to a limited degree and tests verify the concepts. Further analysis and experimentation would be required to determine which offers the best solution to interface detection.

Therefore, it is concluded that interface detection is indeed possible using fluidic technology, and that, for at least one concept, the detector could be incorporated into a control system to effect automatic flying switches upon arrival of the interface at the takeoff point.

P-85-1951

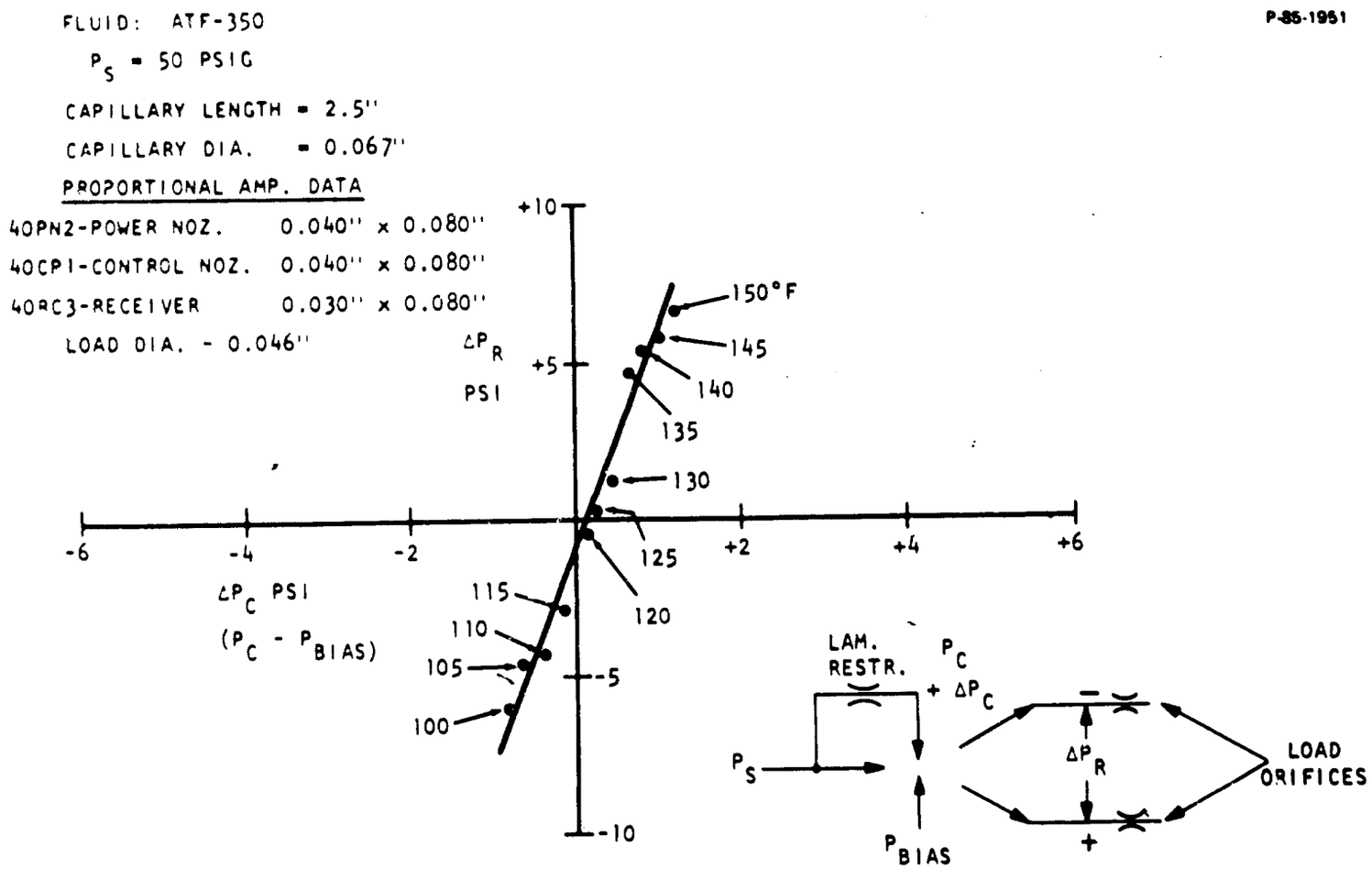

Figure 5-40 - Breadboard Fluidic Viscometer Performance

APPENDIX A

DEVELOPED FLUIDIC INTERFACE DEVICES

Developed Under Contract N00019-68-C-0379 for U.S. Navy Air System Command By Bendix Research Laboratories, Southfield, Michigan 48075.

A.1 TEMPERATURE COMPENSATED ABSOLUTE PRESSURE SENSING CIRCUIT

The pressure sensing circuit is a combination of laminar and orifice-type flow restrictors. In the operating range, flow is directly proportional to the pressure difference across the laminar flow restrictors while flow is a function of the square root of the pressure difference across an orifice-type flow restrictor. The differential output pressure of this sensing circuit is a unique function of input mass flow at a given temperature. A downstream orifice, A_{03}, operates in the sonic flow regime near the design point, and eliminates any effects of the ambient pressure on the nullpoint of the pressure sensing circuit. Temperature effects on flow-pressure relations are different for the laminar restrictor than for the orifice restrictor. Thus, the nullpoint of the pressure sensing bridge changes as a function of temperature as shown in Figure A-2. This thermal effect is analytically predictable and can be compensated in several ways. A simple compensation is effected by varying the area of the downstream orifice, A_{03}, as a function of temperature. Analysis predicts linear relation between area and temperature for proper compensation. The differential thermal expansion compensating orifice shown in Figure A-1 satisfies this requirement. The flow restriction of the device is the

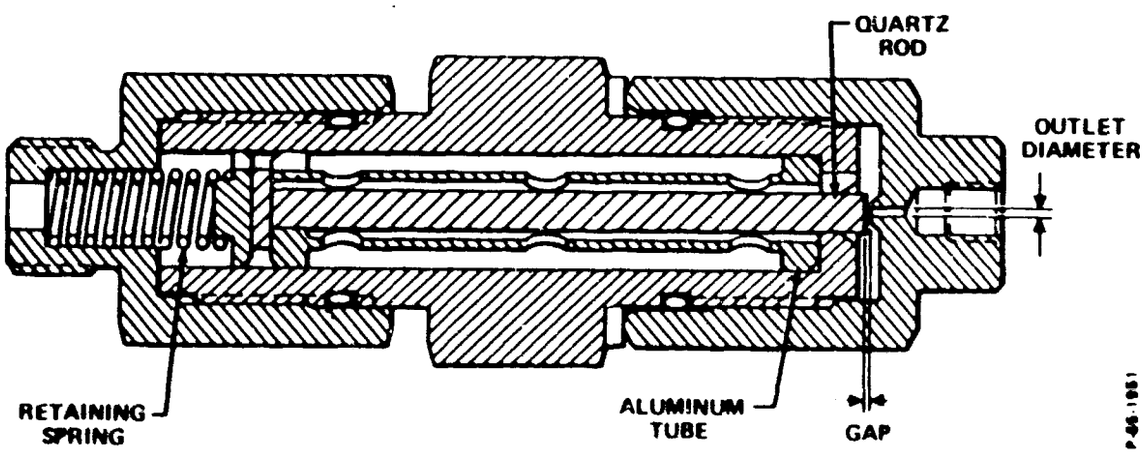

Figure A-1 - Differential Thermal Expansion Compensating Orifice

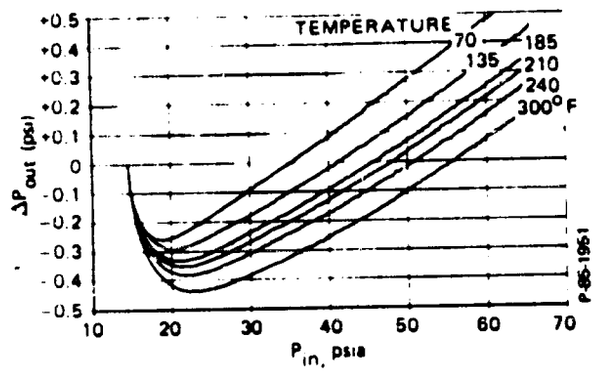

Figure A-2 - Uncompensated Sensing Circuit Temperature Characteristics

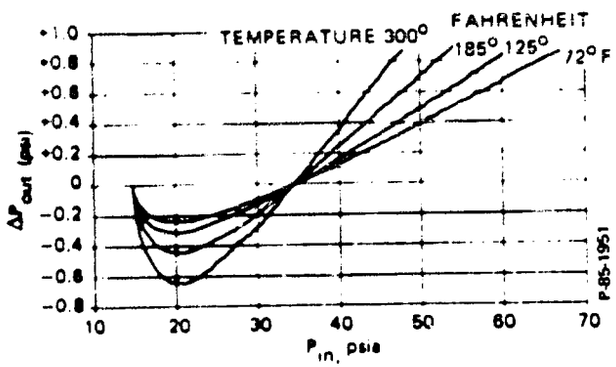

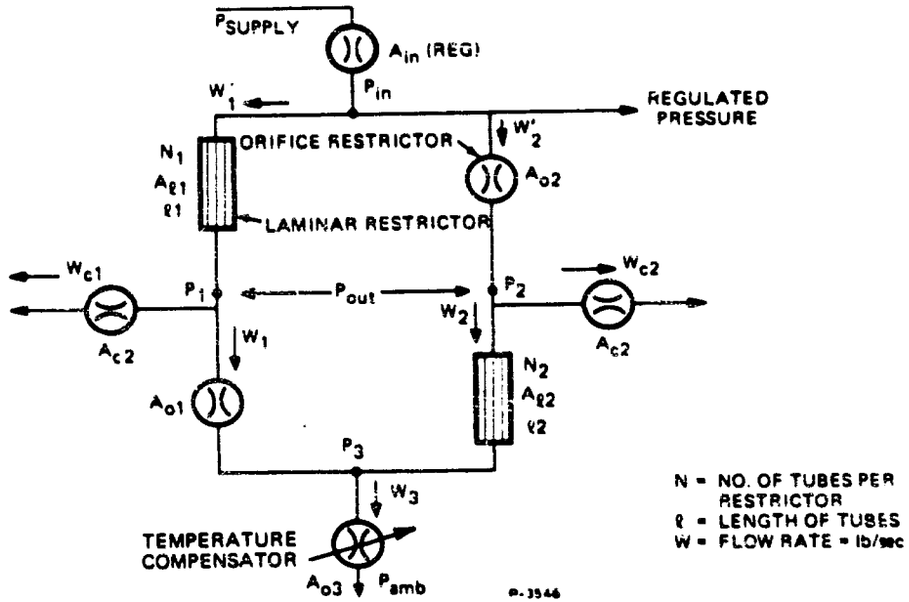

Absolute Pressure Sensing Circuit

Figure A-3 - Compensated Sensing Circuit Temperature Characteristics

gap between the orifice and the quartz rod. The quartz rod is supported by an aluminum tube. Increasing the temperature expands the aluminum tube, while the expansion of the quartz rod is negligible. This forces the quartz rod into the retaining spring and increases the gap. The restricted area, thus, increases as a linear function of temperature over the design range.

Experimental results of a typical temperature test are shown in Figure A-3 for the temperature compensated pressure sensing circuit. The 21 psi temperature shift of the uncompensated circuit is reduced to 0.6 psi for the temperature compensated design for the 270°F temperature change. The nullpoint of the bridge remains constant for any operating temperature within the design range.

A.2 FLUIDIC PRESSURE REGULATOR

This fluidic pressure regulator shown in Figure A-4 combines a passive laminar-orifice restrictor bridge pressure sensing circuit with a vortex valve controlled confined-jet feedback amplifier and another vortex flow controller for closed-loop absolute pressure regulation. The pressure sensing within the regulator is accomplished by a passive bridge

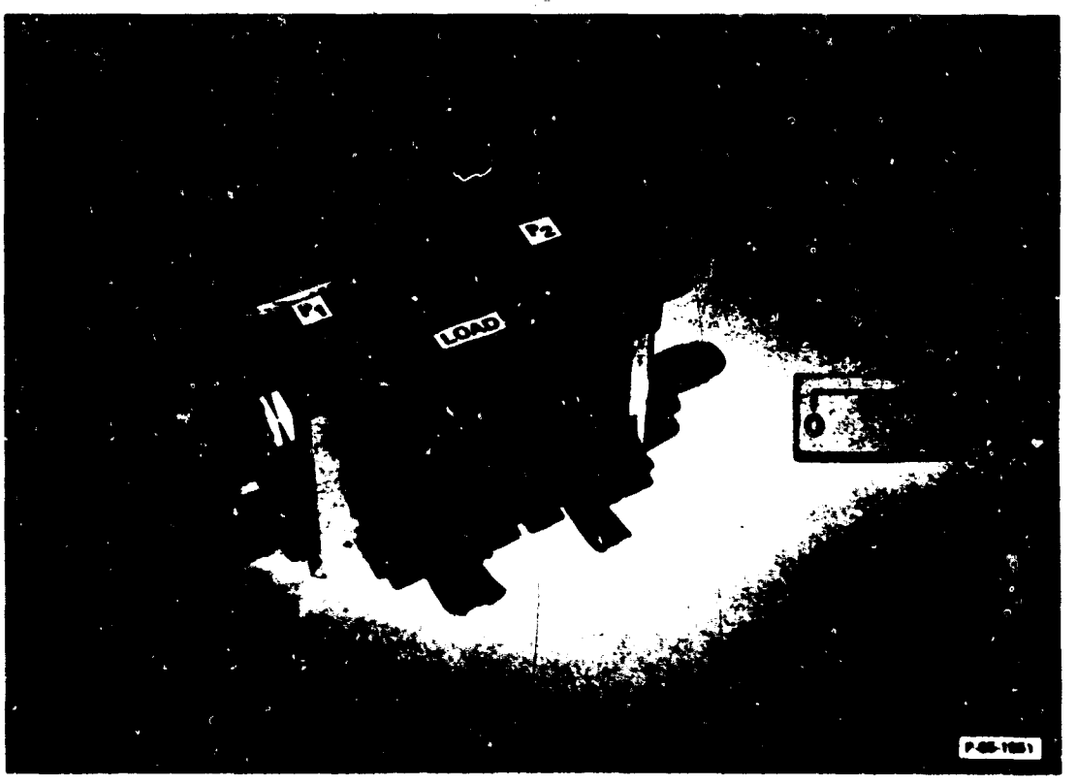

Figure A-4 - Breadboard Sensing Bridge

network of laminar and orifice flow restrictors. In the operating range, mass flow through the orifices is a function of the square root of the pressure difference, while mass flow is proportional to the pressure difference in the laminar flow restrictors. The circuit has a unique nullpoint as a function of input pressure. This nullpoint is used to measure the value of the regulated pressure and to provide the proper error signal to the feedback amplifier. A vortex valve controlled confined-jet amplifier was used for the feedback amplifier. The high pressure recovery, in excess of 80 percent, of this amplifier is necessary for satisfactory operation of this fluidic pressure regulator concept. The output of the confined-jet feedback amplifier controls the flow between the source and the regulated pressure, thus correcting for any error between the regulated pressure and the designed operating point. As described before, the setting of the regulated pressure is accomplished through the initial selection of the passive pressure sensing network.

Typical performance characteristics of this closed-loop breadboard regulator are given below. Input pressure sensitivity of the breadboard confined-jet amplifier required the use of a separate fixed supply source for the amplifier supply pressure for the tests. Figure A-5 indicates that ± 10 percent variation in the input pressure to the sensing circuit causes the regulated pressure to vary 1.4 psi or ± 2 percent. Figure A-6 indicates 1 psi drop in output pressure for 1.0×10^{-4} lb/sec load flow variation at 10 inches of Hg absolute pressure. Identical load flow characteristics were obtained at normal ambient pressure. Figures A-7 and A-8 indicate the effect of ambient pressure on the regulated pressure below and above normal ambient pressure. Ambient pressure varying up to 4 psig did not affect the regulated pressure output.

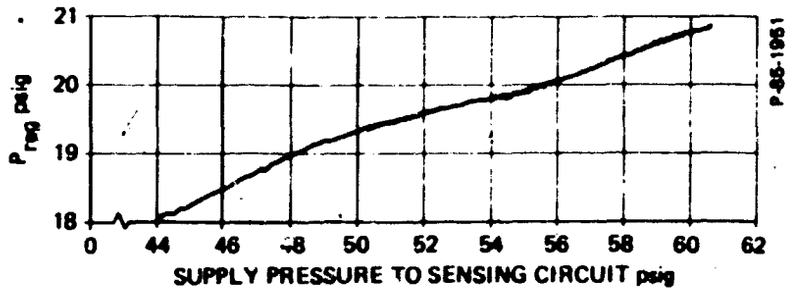

Figure A-5 - Variation of Regulated Pressure with Sensing Circuit Input Variation

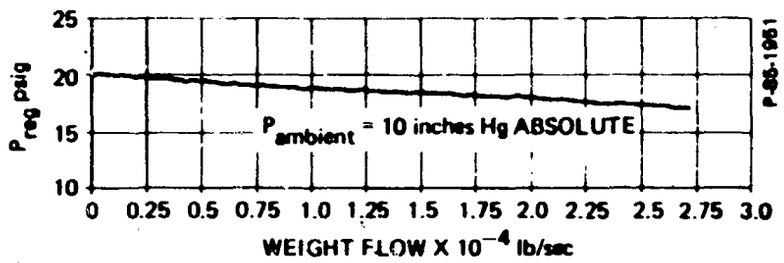

Figure A-6 - Regulation of Regulated Pressure With Load Flow

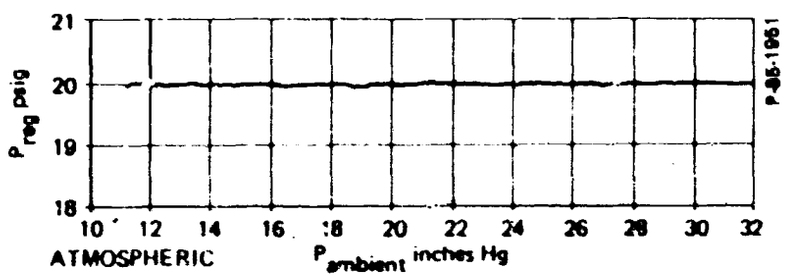

Figure A-7 - Variation of Regulated Pressure with Reduction in Ambient Pressure

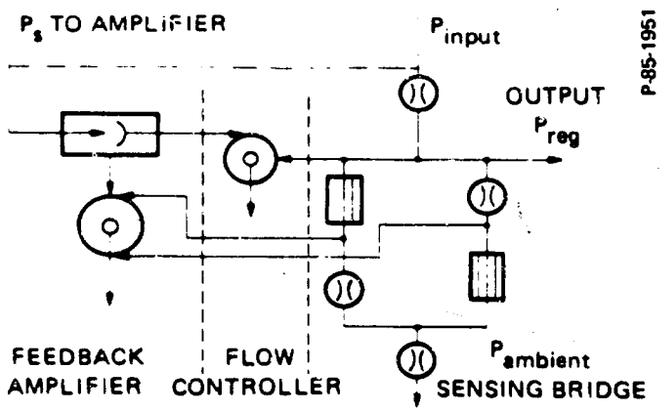

Regulator Circuit Diagram

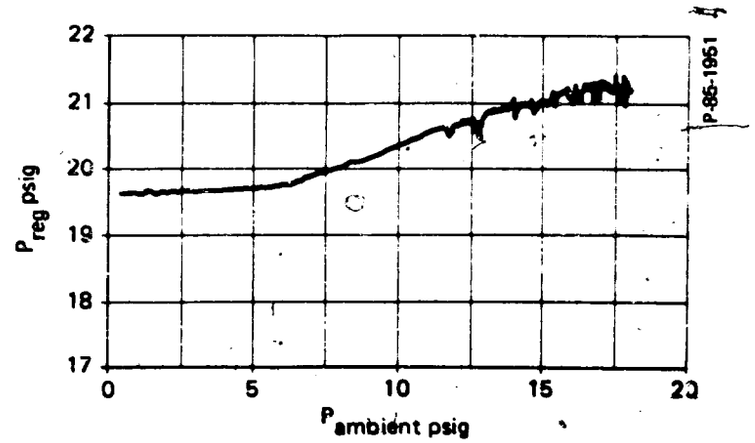

Figure A-8 - Variation of Regulated Pressure with Increase of Ambient Pressure

APPENDIX B

FLUIDIC DEVICE FUNDAMENTALS AND GRAPHICAL SYMBOLOGY

B.1 GENERAL

Since the structural configurations of fluidic devices are fixed and rigid, functions such as amplification and logic must be accomplished by the actions and interactions of moving fluid(s).

All active fluidic devices have four basic functional component parts: a power source, a receiver, a control input, and a control region. These roughly correspond to the cathode, plate, control grid, and interelectrode region in a vacuum tube.

Source flow is introduced into the device, passes through the control region, and is partially or totally recovered in the receiver, the degree of recovery depending upon the details of the device configuration. When control flow is introduced, it modifies the pattern and level of the source flow seen by the receiver, resulting in a change in output. In general, the amount of controlling energy is substantially smaller than the resultant change in output energy, such that practical amplification results.

In most fluidic devices, source flow is constant, and the modulation of energy recovered at the receiver (output) is achieved by flow diversion, as against throttling. In this respect, fluidic devices are similar to jet-pipe valves where a constant flow from a movable source jet is directed into one or more receiver ports, with the amount of energy at each receiver being modulated by the physical orientation of the source jet. The essential difference is that in the jet-pipe valve, source flow diversion is accomplished by physically moving the source nozzle; in fluidic devices, the source input geometry is fixed and the source flow is diverted after leaving the input by the effect of a second, controlling flow.

B.2 BASIC CONTROL APPROACHES

Given the principle of modulating a source flow by the introduction of a second controlling flow, a variety of fluid interaction phenomena exist which provide mechanisms for varying the pattern or energy level of source flow into a receiver. These various phenomena form the basis of present fluidic devices, which differ in details of configuration, performance capability, and specific applicability.

Flow modulation mechanisms utilized at the present can be divided into four basic categories: (1) Jet Interaction - where the source flow is essentially unconstrained by surfaces and the controlling fluid

directly modifies the source flow pattern, (2) Jet-Field Interaction - where the interaction between a free source jet and the surrounding "field" modifies the source jet flow pattern, (3) Jet-to-Surface Interaction - where the interaction between the source flow and an adjacent surface is essential to the controlling action, and (4) Vortex Flow - where the existence of a vortex flow pattern is essential to device functioning.

Jet Interaction

In jet interaction devices, source control action is achieved by the direct effect of control flow on a second, free jet. Included in this category are beam deflection and impact modulation effects.

In beam deflection (Figure B-1), the vector direction of flow from the source jet is varied by flow from one or more control jets oriented at approximately ninety degrees to the source jet. The angle through which the source jet is turned is nominally equal to the arctengent of the control flow momentum, divided by the source flow momentum. For the small angles normally required in practical devices, the angular deflection is essentially a linear function of control momentum such that, given a properly designed receiver, the beam deflection effect can be utilized to develop a linear proportional amplifier.

In impact modualtion (Figure B-2), interaction is achieved by directing two coaxial jets against each other, forming a region of transverse (radial) flow. The shape and location of the impact region can be varied by modifying one of the source jets by introducing a control flow (not shown) into or against that source jet. Again, given an appropriate receiver (located near the impact region), source flow into a receiver can be modulated by a control flow.

Jet-Field Interaction

In jet-field interaction devices, source control action results from the effect of the fluid medium surrounding the source jet (the "field") on the pattern of the jet flow - and, hence, upon the amount of energy recovered in a downstream receiver. Included in this category are the field-modulated jet pattern and controlled turbulence effects.

When a gaseous jet is caused to flow from a nozzle into a free gaseous medium, the detailed structure of the pattern of flow from the nozzle through the medium depends upon the ambient pressure at the exit of the nozzle and in the surrounding medium. At the least, the spreading of the free jet is influenced and, depending upon relative source and ambient pressures, shock phenomena may result with gross effect on the jet pattern. If, as shown in Figure B-3, the region around the source jet is enclosed, allowing the ambient pressure in the medium downstream of the nozzle to be conveniently controlled, it is possible to alter the jet flow pattern and thus control the recovery at a receiver.

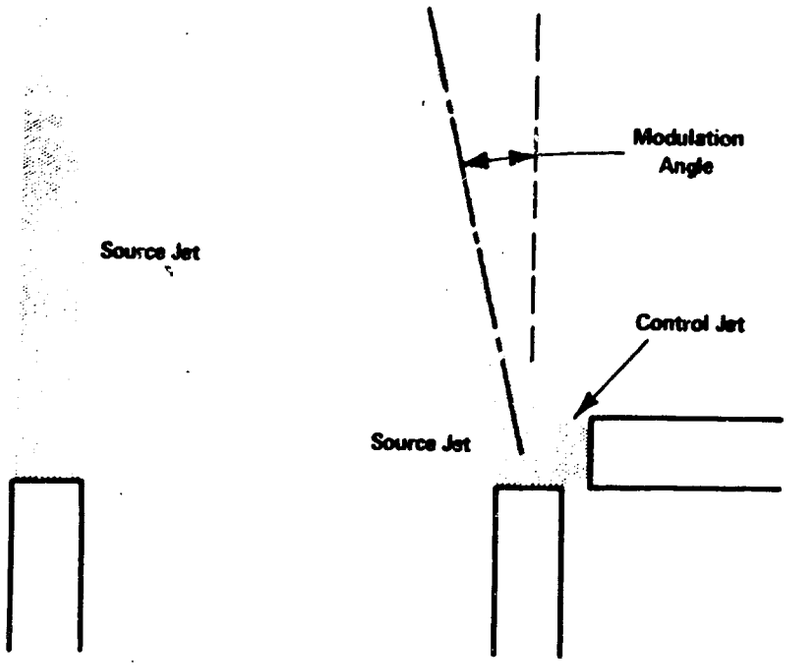

Figure B-1 - Beam Deflection Effect

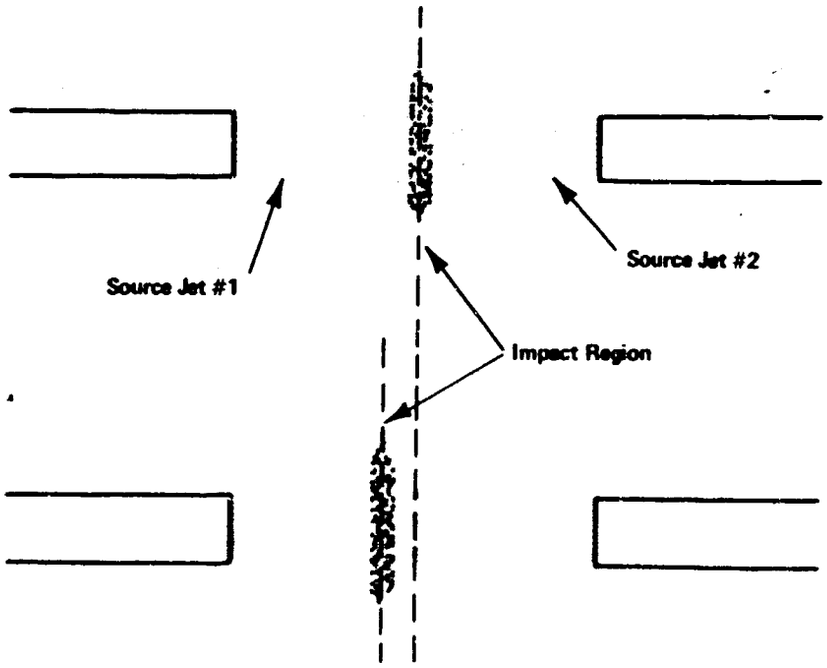

Figure B-2 - Impact Modulation Effect

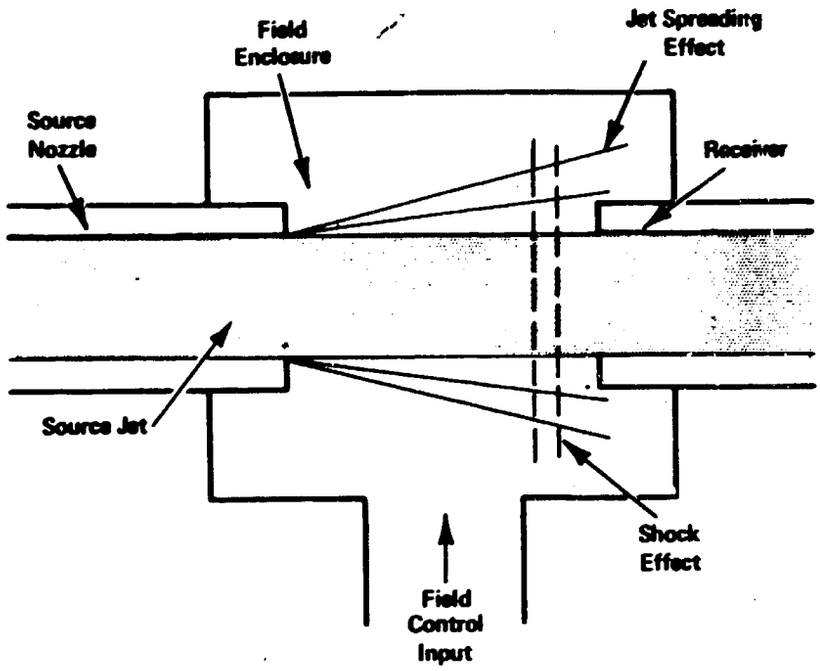

Figure B-3 - Field-Modulated Jet Pattern Effect

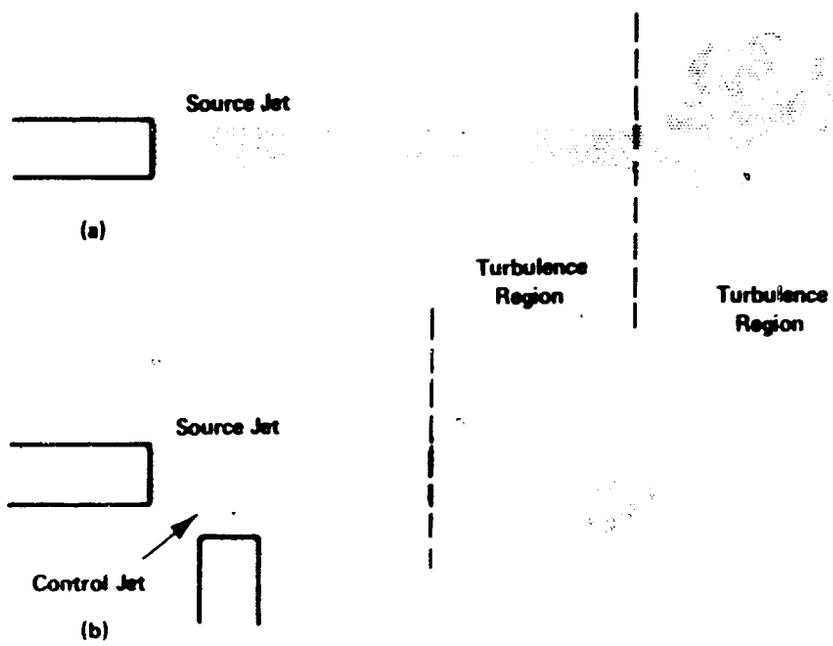

Figure B-4 - Controlled Turbulence Effect

When flow is ejected from a nozzle into a still, free medium, the jet flow will remain laminar for a distance from the nozzle and then abruptly become turbulent (Figure B-4(a)). For a given medium, the distance from the nozzle at which the turbulence begins is dependent upon the stillness of the medium. In the controlled turbulence effect, a second control input is provided in the normally laminar region near the exit of the nozzle. With no control input the source jet will stay laminar to a maximum distance from the nozzle exit. When control flow (or a sonic disturbance) is introduced, it disturbs the source jet, causing the point of turbulent breakdown to move inward toward the nozzle (Figure B-4(b)). Since energy recoverable from the jet is much greater in the laminar region than in the turbulent region, a receiver located between the no-control turbulence point and the control turbulence point will sense a significant change in energy with and without a control input. Since the amount of energy controlled at the receiver is much larger than the energy required to change the jet turbulence state, signal amplification is possible.

Jet-to-Surface Interaction

In jet-to-surface interaction devices, device functioning depends upon the interaction of the source flow with an adjacent surface. The most common forms of flow-to-surface interaction involve: (1) the attraction (and attachment) of a stream to a surface, and (2) the tendency of attached flow to leave (separate from) a curved surface. In both attachment and separation effects, the interaction with the surface supports and is essential to the device behavior, but the actual controlling function is provided by a second fluid input.

Surface attachment is generally known as Coanda Effect and can be explained as follows (Figure B-5(a)). When a jet exits from a nozzle it entrains particles from the surrounding fluid medium due to viscosity. Particles thus entrained are eventually returned to the medium when the jet stagnates some distance from the exit. If a surface is placed adjacent to the jet such that it restricts the return flow (or other replacement) of entrained particles, the region between the jet and the surface will tend to become "evacuated," resulting in a lowering of pressure in that region. The resultant pressure differential across the jet causes the jet to bend toward the wall until, under proper conditions, the jet will "attach" to the wall. Since the attachment of the jet further restricts the return of entrained particles, the evacuation effect is continually maintained and the attached condition is stable. The jet may be detached from the surface by injecting flow into the low-pressure region, replacing the entrained particles and eliminating the pressure differential. The stability of the attachment, in combination with its controllability, forms the basis of fluid amplifiers useful for digital applications as described in greater detail in a subsequent section.

If a jet is caused to flow along a curved surface, it will remain "attached" to that surface, unless the curvature is so great that centrifugal effects pull the flow away from the surface. The departure of flow from a curved surface is called separation.

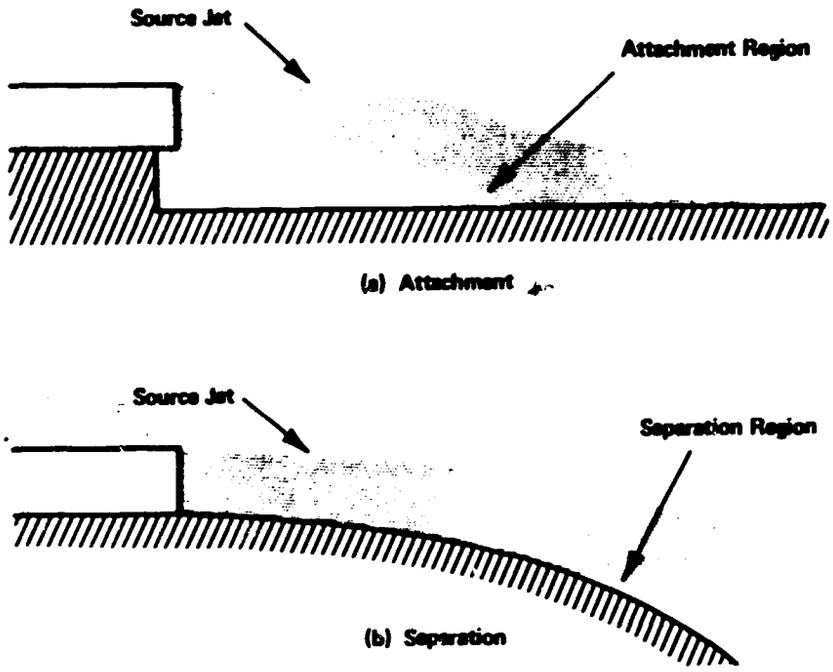

Figure B-5 - Jet-to-Surface Interaction Effects

As indicated in Figure B-5(b), the angle at which the flow leaves the surface depends upon the precise point at which separation occurs. Since the separation point is quite sensitive to flow injected in the vicinity of the separation region, the angle of source jet flow can be modified by a second control flow, providing another means for modulating source flow direction similar in effect to the beam deflection approach discussed above.

Utilization of this effect in a practical amplifier configuration requires the addition of suitable receiving ports downstream of the separation control region. Given a pair of adjacent receivers, the source flow can be diverted between the ports by modifying the flow angle. Since a large source flow can be controlled by a smaller controlling input, amplification results.

Vortex Flow

In vortex flow devices, source flow is introduced radially inward at the circumference of a pancake-shaped chamber and exits from a hole at the center of the chamber (Figure B-6(a)). Modulation of the source flow is achieved by the introduction of a second flow tangential to the chamber circumference.

In the absence of control flow, the source flow proceeds radially inward from circumference to center hole of the chamber. When tangential control flow is introduced, the source and control flows combine and the

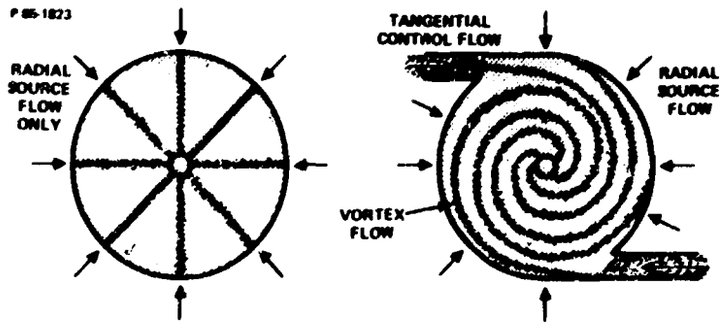

(a) Chamber Flow Patterns

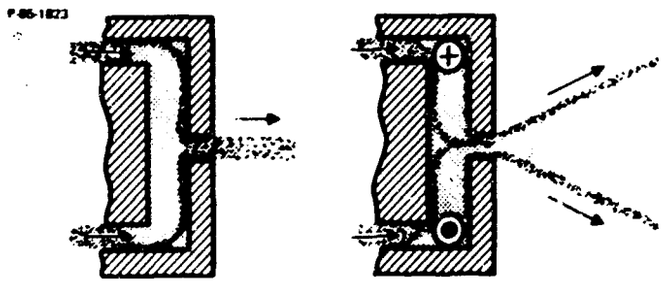

(b) Exit Flow Patterns

Figure B-6 - Vortex Flow Effects

resultant flow develops a degree of swirl dependent upon the relative magnitudes of the source and control flow momenta.

The change from radial to vortex flow caused by the tangential control flow modifies the exit flow pattern (Figure B-6(b)) such that the energy recovered in an appropriate receiver can be varied by the control flow. In addition, the change from radial to vortex flow in the chamber varies the pressure gradient across the chamber such that the magnitude as well as the pattern of source flow is altered.

The modification of source flow pattern in combination with a suitable receiver allows the development of amplifiers comparable in function and utility to the various jet devices mentioned previously. The capability of vortex devices to substantially reduce source flow gives them the added function of throttling, which is unique among fluidic devices.

B.3 TYPICAL AMPLIFIER CONFIGURATIONS

As indicated above, a variety of modulation techniques are available which can be utilized to form functional fluidic devices. The manner in which three of the most commonly used mechanisms are utilized in practical elements is presented below.

Jet Proportional Amplifier

A common form of proportional amplifier is implemented using the beam deflection effect.

Referring to Figures B-7(a) through B-7(d), the profiles shown represent plan views of channels cut uniformly deep into a flat plate with a second flat plate laid on top, enclosing the open regions in a "two-dimensional sandwich."

The basic operation of a jet proportional amplifier can be explained as follows. Source flow is introduced through a nozzle to form the source jet (Figure B-7(a)). The introduction of a second control jet allows the direction of the source jet to be varied (Figure B-7(b)). The introduction of a receiver port downstream in the source jet path allows the recovery of a variable amount of source flow as a function of control flow input. Zero and maximum control flow conditions are shown in Figures B-7(c) and B-7(d). Assuming that the flow in the receiver is restricted to develop an output pressure, the pressure control characteristic for such a device is as shown in Figure B-7(e).

In general, jet proportional amplifiers are made symmetrical about the source jet center line, as shown in Figure B-8(a). For zero or equal non-zero control pressures, the source jet is directed to the center vent resulting in low, equal flow (hence, equal pressure) in the two output ports. As the control pressures are varied differentially, the source jet is directed toward one output port and away from the other. A typical differential pressure characteristic for such an element is shown in Figure B-8(c). In a well-designed element, the variation in output pressure (and flow) is substantially larger than the controlling pressure (or flow), such that signal amplification results.

Figure B-9 illustrates a three-stage amplifier utilizing jet proportional amplifying elements. In such a cascade amplifier, the outputs of a given stage are connected to the control inputs of the following stage. The sizes and source pressure levels of the individual stages are selected for maximum overall amplifier effectiveness (maximum gain and linearity, minimum power requirement and noise level).

Jet Bistable Amplifier

The surface attachment (Coanda) effect is utilized to implement an extremely useful fluidic device, the jet bistable amplifier (flip-flop).

Referring to Figure B-10, the profiles shown again represent channeling enclosed in a "two-dimensional sandwich."

Source flow is introduced through a nozzle to form the source jet (Figure B-10(a). Due to viscosity, the surcce jet entrains particles from the surrounding medium. If a wall (surface) is introduced which restricts the entrainment flow, a low pressure region will be formed, resulting in a bending of the jet toward the wall (Figure B-10(b).

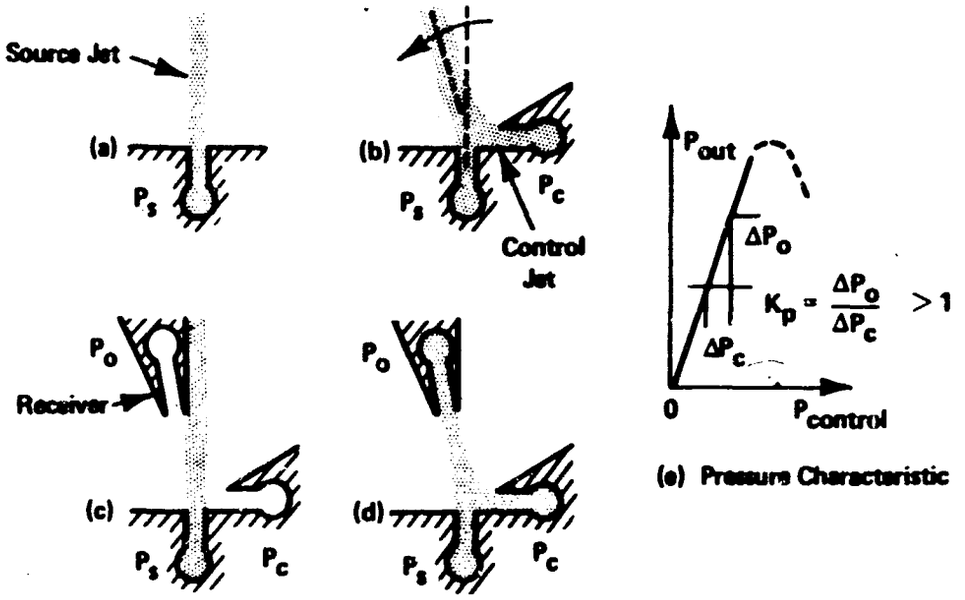

Figure B-7 - Jet Proportional Amplifier Operation

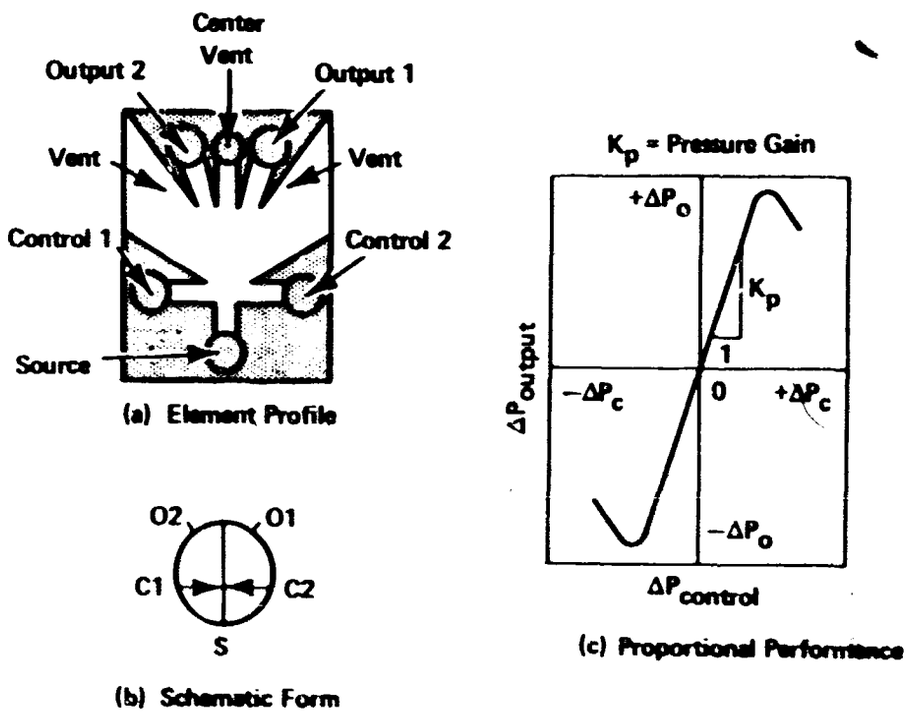

Figure B-8 - Jet Proportional Amplifiers - Form and Characteristics

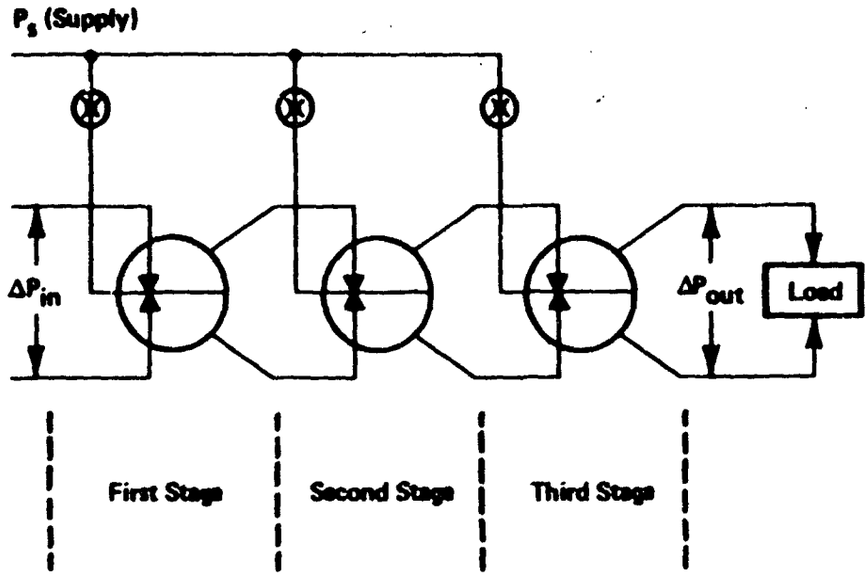

Figure B-9 - Staged Jet Proportional Amplifier

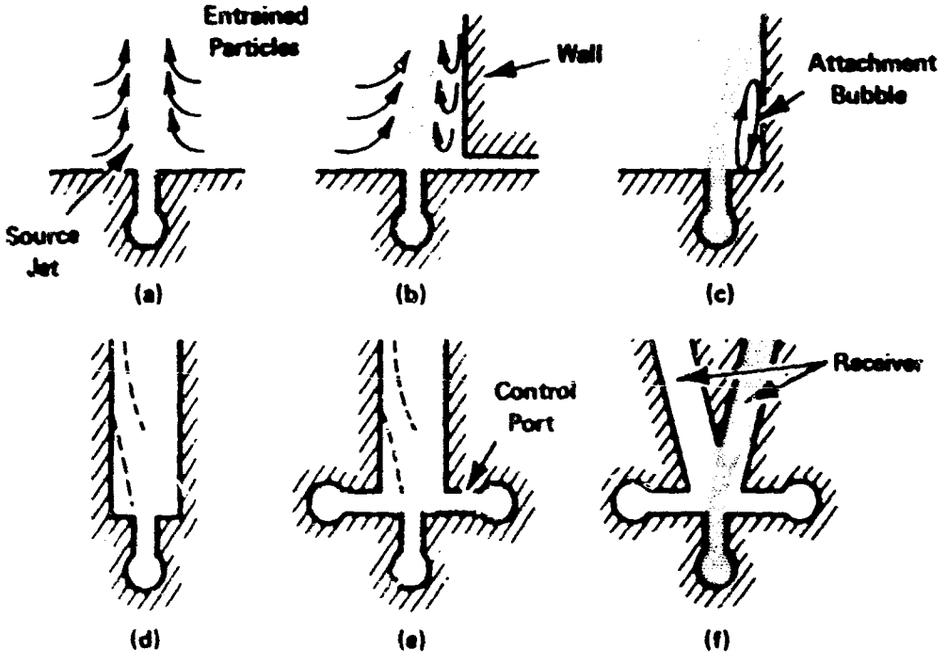

Figure B-10 - Jet Bistable Amplifier Operation

If the source flow is sufficiently intense and the wall sufficiently close, the jet will attach to the wall, forming an enclosed low-pressure region commonly called the "attachment bubble" (Figure B-10(c)).

If two walls are placed symmetrically about the jet, the possibility of attachment to either wall is equally probable (Figure B-10(d)). Once attachment of one wall has been accomplished, however, unless disturbed by an external input, the jet will remain attached to the selected wall indefinitely.

The capability of controlling the attachment position is introduced by providing control ports in the attachment bubble region of the two walls (Figure B-10(e)). If the jet is attached to the right wall (as in Figure B-10(e)), it can be switched to the left wall by introducing sufficient flow through the control port to replace the entrained particles and fill the attachment bubble. Once switching is accomplished, the control flow may be stopped and the jet will remain in the switched condition - essentially "remembering" the last switching command.

In a practical bistable amplifier configuration, the two walls are placed at an angle, allowing the introduction of a central wedge ("splitter") and the formation of a receiver pair (Figure B-10(f)). Because of the wall attachment effect, the source flow is stable only on one wall or the other, and the receiver outputs are either "on" or "off." The switching and memory characteristics of such a device make it a functional "flip-flop," having great utility in the implementation of digital networks. Since the control flow (and pressure) required to switch the device are lower than the source flow (and pressure) recoverable at the outputs, the device is an amplifier with dignificant fanout capability; i.e., it can control several amplifiers of the same size and type.

The form and pressure characteristics for a typical jet bistable amplifier are shown in Figure B-11. As indicated on the profile of Figure B-11(a), vents are generally provided in the receivers just downstream of the splitter. The primary function of the vents is to decouple the attachment region from load effects, in particular, providing an alternate path for output flow when a highly restricted load is used.

The bistable nature and "memory" capability of the device are indicated by the composite characteristic of Figure B-11(c).

Jet bistable amplifying elements can be cascaded to achieve pressure, flow, or power amplification as indicated in Figure B-12. As in a cascaded jet proportional amplifier, stage sizes and pressure levels must be selected for an optimum amplifier design.

Vortex Amplifier

As mentioned previously, modulation achieved in a vortex device results in both flow pattern change and a throttling effect on flow through the chamber. A vortex amplifier benefits by both effects, but depends primarily on the pattern change.

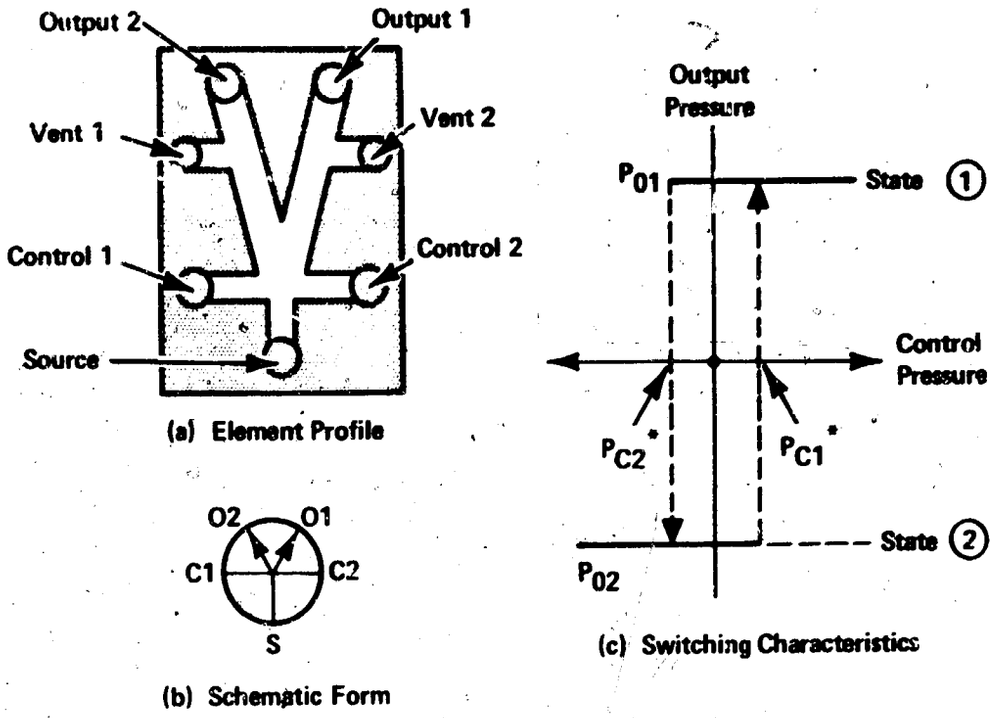

Figure B-11 - Jet Bistable Amplifier - Form and Characteristics

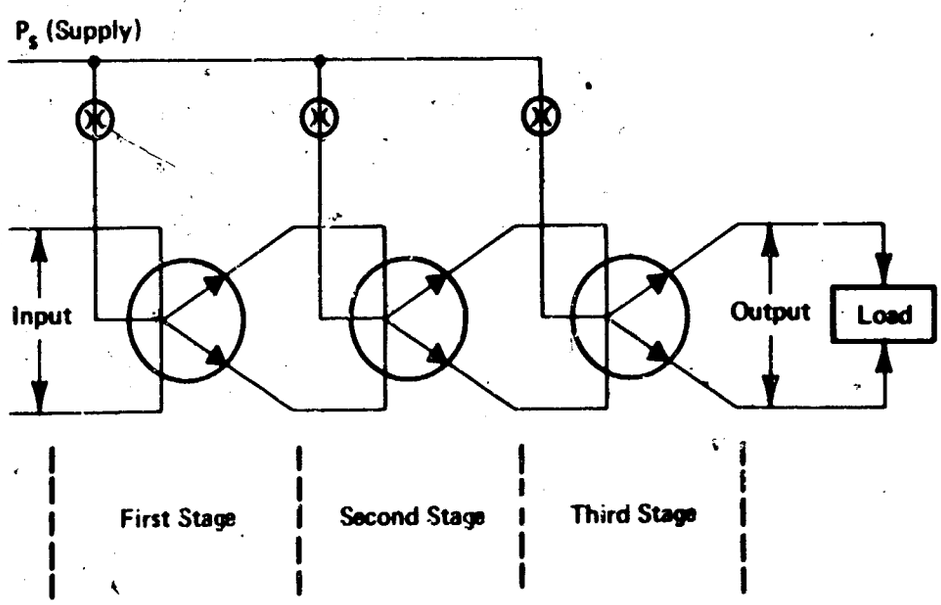

Figure B-12 - Staged Jet Bistable Amplifier

Referring to Figure B-6(b), the general pattern of flow in the region of the chamber outlet is indicated for zero and non-zero control flow inputs. With zero control, flow through the chamber proceeds radially inward and exits from the chamber as a jet coaxial with the chamber axis. As tangential control flow is injected, the flow through the chamber acquires angular momentum, and a swirling pattern results. Due to conservation of angular momentum, the tangential velocity increases as the flow proceeds inward through the chamber, with the result that flow will take on a conical spreading geometry upon leaving the chamber exit. The resultant three-dimension flow pattern modulation can be utilized in a manner similar to the two-dimensional pattern modulation of the jet proportional amplifier by the introduction of a suitable receiver.

Figure B-13(a) shows a simple probe pickoff (external pickoff) placed outside the chamber exit in a position such that the amount of flow recovered by the probe depends upon the conical spreading of the exit flow pattern and, hence, upon the level of tangential control input. The pressure characteristic for such an amplifier configuration is shown in Figure B-13(c).

The schematic of Figure B-13(a) shows two pickoff (receiver) forms; the external pickoff as discussed above, and an internal pickoff located within the body of the amplifier. The internal pickoff functions by responding to the pressure at the chamber wall opposite from the main exit hole of the chamber. The pressure at the wall varies inversely with the degree of swirl that the flow has as it leaves the chamber exit. The pressure characteristic for a properly designed internal pickoff is simialr to that for an external pickoff (Figure B-13(c)).

Given the flow pattern characteristics within the external to the vortex chamber exit, a variety of specialized receiver configurations are possible. The types illustrated are simple in configuration and provide a useful amplifying characteristic with high energy recovery. Of particular note, the maximum pressure recoverable at the amplifier outputs with either internal or external pickoffs approaches 100 percent of supply pressure.

Vortex amplifying elements can be staged to form high-gain multistage amplifiers as shown in Figure B-14.

Vortex Valves

As mentioned previously, varying the relative angular momentum of flow through a vortex chamber modifies the radial pressure gradient across the chamber, with a resultant variation of total flow through the chamber. A vortex chamber having a radial (source) input and a tangential (control) input can thus be used to throttle the flow from a source and to a load. This action is basically different from the other fluid modulating mechanisms discussed previously in that flow from a source can be reduced, not merely diverted relative to a receiver.

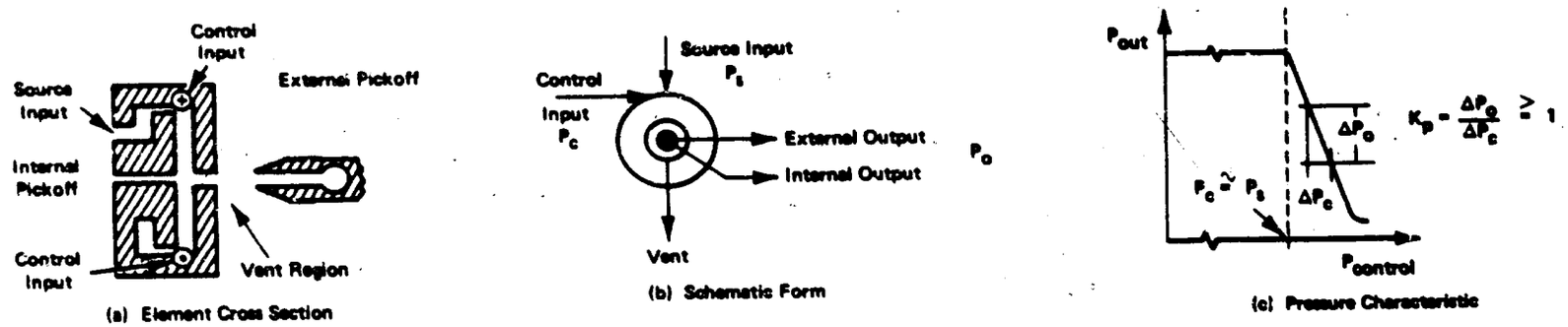

Figure B-13 - Vortex Amplifier - Form and Characteristics

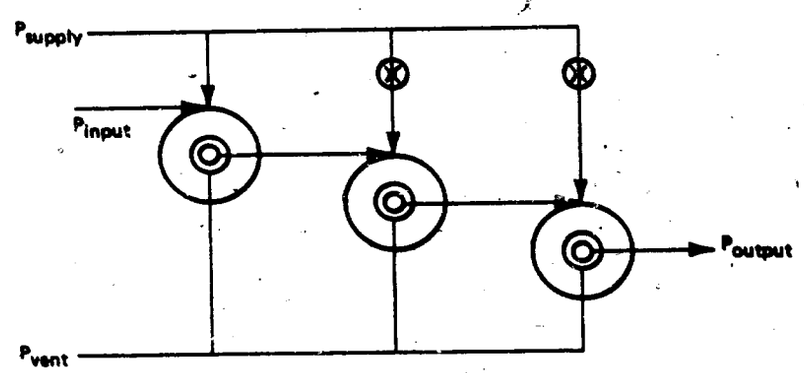

Figure B-14 - Staged Vortex Amplifier

The configuration for such a "vortex valve" is shown in Figure B-15. The chamber configuration is essentially similar to the vortex amplifiers described, with the exception that there are no pickoffs in a valve; the exit flow is either totally vented or totally captured.

The intrinsic throttling characteristic of a vortex valve is indicated in Figure B-16, which shows the variation of flow through the valve as a function of control pressure for fixed supply and exit pressures. For most applications, the valve is connected in series with a load, and the effect of the load on the effective valve source or exit pressures must be considered. Figure B-17 illustrates the method of graphically determining the operation of a valve-orifice combination where the load orifice is in series with the source flow to the valve.

B.4 GRAPHICAL SYMBOLOGY

The following discussion of fluidic graphical symbology is taken from the proposed revisions to Section 3 - Schematics, submitted in a revised form on November 10, 1967, and prepared by the Fluidics Panel of Subcommittee A-6D, Fluid Power Utilization, of Committee A-6, Aerpspace Fluid Power Technologies.

The purpose of the graphic symbols is to enable the circuit designer to employ meaningful and specific symbols in drawings and schematics which will clearly define the function or type of device employed to perform that function.

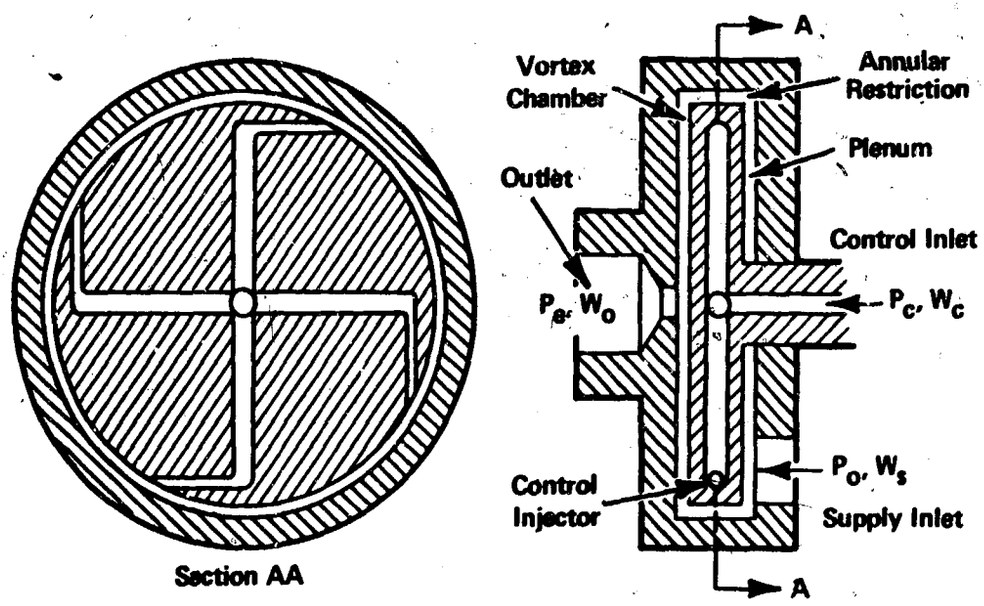

Figure B-15 - Vortex Valve Schematic

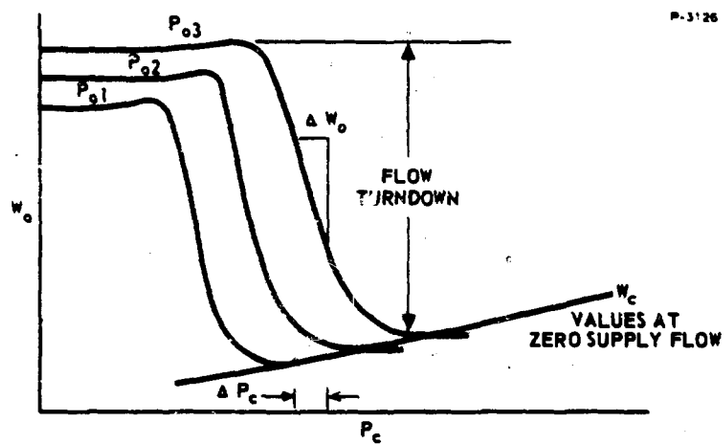

Figure B-16 - Vortex Valve Characteristic Curves with Regulated Supply

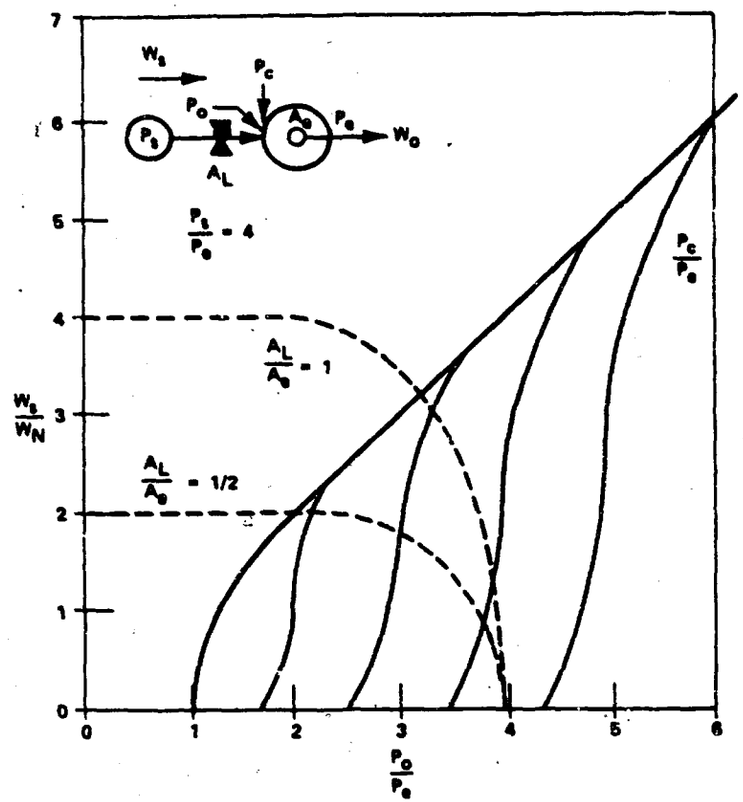

Figure B-17 - Vortex Valve Characterisitcs with Supply Load

In the course of preparing this document, it was recognized that fluidic symbols were required to satisfy two basic needs. The first was the need of the system designer interested primarily in the function of the device. The second was the need of the circuit designer primarily interested in the operating principle of the device.

The following is a set of symbology which satisfies both requirements. Functions of the device are defined by symbols enclosed within a square envelope. Operating principles of the devices are defined by symbols enclosed within round envelopes. The difference in envelopes is specifically intended to emphasize the difference in purpose of the symbols.

Figure B-18 shows the basic functional and operating principle symbols. By definition, the symbols are intended to show the following:

- Functional Symbol - Depicts a function which may be performed by a single fluidic element or by an interconnected circuit containing multiple elements.
- Operating Principle Symbol - Depicts the fluid phenomena in the interaction region which is employed to perform the function as well as the function of the fluidic element.

The relative port locations for the symbols are shown in Figure B-19. All symbols may be oriented in 90-degree increments from the position shown.

Specific ports are identified by the following nomenclature:

Supply port - S

Control port - C

Output port - 0

The nomenclature shown on the graphic symbols need not be used on schematic diagrams. It is primarily intended to correlate the function of each port with the truth table.

Supply ports can be either active or passive. An inverted triangle, V, denotes a supply source connected to the supply port (active device).

An arrowhead on the control line inside the symbol envelope indicates continual flow is required to maintain state (no memory, no hysteresis):

A small + on the output of a bistable device indicates initial or startup flow condition.

For logic notation, the following definitions are used:

$A \cdot B$ = A "and" B

$A + B$ = A "or" B

$\bar{A} \cdot \bar{B}$ = "not" A and "not" B

Analog or proportional amplifiers are represented as shown in Figure B-20.

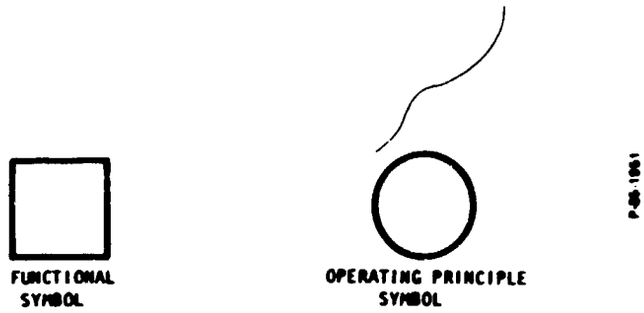

Figure B-18 - Basic Symbols

Figure B-19 - Port Locations

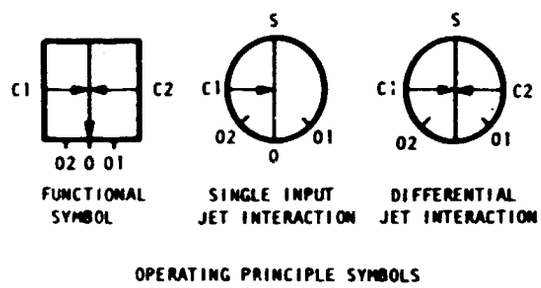

Figure B-20 - Proportional Jet Interaction Amplifier

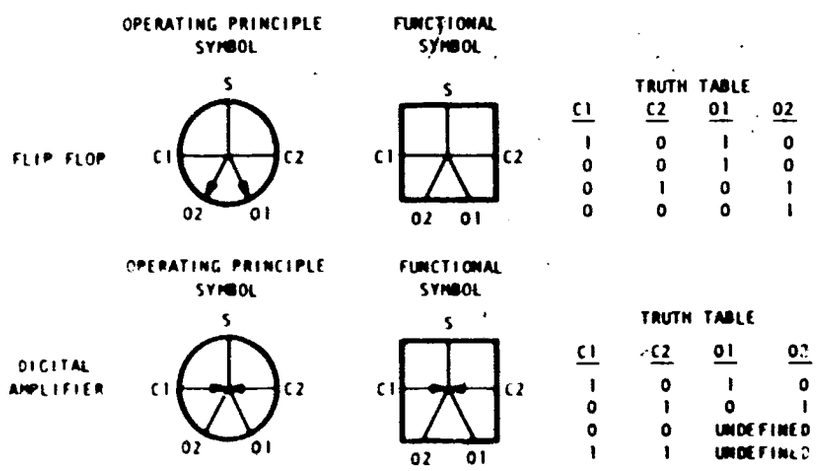

Figure B-21 - Bistable Digital Devices

Bistable digital devices include the flip flop and the digital amplifier. The flip flop has an inherent hysteresis loop and, therefore, has memory capability whereas the digital amplifier provides only the sharp switching characteristic of the wall attachment devices. These devices are shown in Figure B-21.

The monostable amplifier shown in Figure B-22, is also a digital device. However, it only has memory on one output. The monostable is a very important logic element since it can be used for OR, NOR, and NAND logic operations.

Occasionally, for reasons of better clarity, the jet interaction devices are shown in a schematic form that closely resembles their actual shape. To designate the location of memory for the digital devices, hash marks are placed along side the memory legs. This is shown in Figure B-23.

In logic diagrams, the complementing output from a logic element is indicated by using a small circle either at the output of the element, or sometimes, at the element to which the output is directed.

Fluidic devices inherently provide both the output and its complement. That is, if one of the two outputs of a bistable amplifier is A, the other can be thought of as $\bar{A}$ (A not).

APPENDIX C

OPERATING PRINCIPLES OF THE BENDIX CLOSED-CONNECT FLUIDICALLY CONTROLLED FUELING DEVICE

C.1 INTRODUCTION

The purpose of the following discussion is to help the reader to understand the operating procedures and principles of operation of the delivered prototype fueling device.

C.2 OPERATIONAL FEATURES

C.2.1 Receptacle

The fueling device consists of two separate units - the nozzle and the receptacle. The receptacle is, of course, located in the vehicle fuel tank.

A photo of the receptacle is shown in Figure C-1. This is a view from the inside of the tank and it shows most of the critical components. One important feature of this model of the receptacle is the ability to remove the center-located nipple. This allows for fueling the vehicle in the normal gravity-fill mode if the closed-connect nozzle is not available.

Another important feature of this model is that it is restricted to locations in the fuel tank above the normal full tank fuel level. This is obvious because the float housing is affixed to the flange. Although a model was not fabricated during the course of this contract, it is entirely possible to design the fueling device for bottom-fill application. That is, for fueling a vehicle at a point convenient for the operator regardless of the fuel tank location. This would be accomplished by attaching the float housing and float to the inner wall of the tank at the desired full-tank level. The float valve, presently located within the removable nipple would also be relocated with the float housing to the desired full tank level. Suitable sensing and amplifier vent flow lines would be connected between the float valve and these lines in the nipple. For this type of application, the nipple would actually be a fixed part of the flange since it would be impossible to fuel the tank via normal gravity techniques.

The float and the float valve provide a signal to the fluidic control circuit in the nozzle to indicate when the tank is full. Operation of the fluidic circuit is explained later.

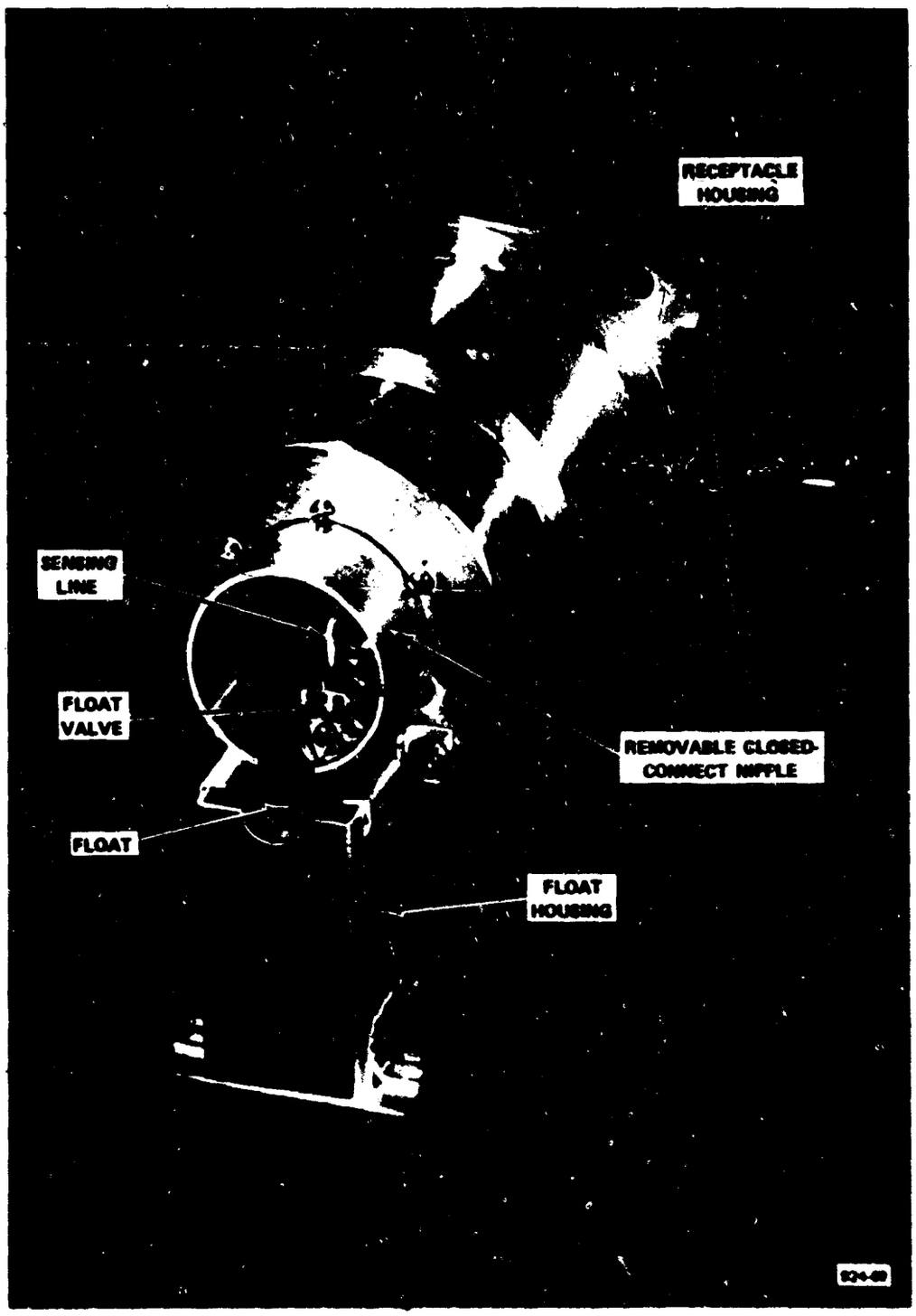

Figure C-1 - Closed-Connect Fueling Nozzle Receptacle

C.2.2 Nozzle

The fueling device nozzle is shown in Figure C-2. The principle feature of the nozzle and the fueling device in general is the closed-connect feature. This offers unique advantages to military fueling operations. The basic advantage is the ability to fuel a vehicle with assurance that there is no way for airborne contaminants to enter the fuel tank during the fueling operation. This is especially advantageous for fueling helicopters in tactical situations where it is desirable to keep the engine running for fast turn-around.

Some of the other advantages are reduced fire hazard and faster refueling rates. Also, as indicated in subsection C.2.1, easier access to the fueling point can be offered for vehicles with tanks that are not located near ground level, such as large earth moving machinery.

The use of closed-connect fueling requires some form of automatic fuel shutoff because the operator may not have any means by which he can observe the rising fuel level in the tank.

There are several closed-connect fueling devices which provide automatic shutoff with various mechanical techniques. The device discussed here uses a unique fluidic circuit to sense the fuel tank level and the delivery line pressure and uses this information to regulate the fuel delivery to the tank and to automatically shut off the flow when the tank is full.

The main components of the nozzle are called out in the photo of Figure C-2. The coupling is an adaptation of a commercially available coupling. It provides for rapid connection and disconnection to the receptacle in the tank. Connection is achieved simply by pressing the nozzle against the receptacle. Spring loaded latching bars lock into recess grooves in the receptacle. Motion of the parts of the coupling over the nipple in the receptacle provides seals between the main fuel flow path and the ambient and opens a valve in the ends of both the nozzle and the receptacle to provide a flow path for the fuel.

Disconnection is achieved by pulling on the lanyard. This releases the latching bars and a spring pushes the nozzle off the receptacle. This motion allows the valves in both components to close and seal the fuel in the tank and the main flow passage in the nozzle from the ambient. Essentially no leakage occurs during either the connection or disconnection process.

Located within the coupling on both the nozzle and the receptacle are two additional small flow lines. They are both concentric to the main flow path. These two lines are a part of the fluidic circuit and they carry the sensing line flow and the vent flow from the fluidic amplifier to the tank. The function of these lines will be discussed later when the fluidic circuit is described.

The main valve housing encloses the main valve and provides a clamping force to hold a series of rolling-diaphragm seals in position. The seals form pressure chambers in which forces are developed for positioning the main valve.

The fluidic circuit shown in Figure C-2 consists of the fluidic amplifier and the various manifold passages required for routing fuel to and from the amplifier circuit.

The button labelled "operating switch" is used to start and stop automatic fueling. Pulling outward on the button starts the fueling operation. Pushing inward will stop the operation at any desired time. Otherwise, during automatic operation, the fuel flow will shut off when the fuel tank is full. When this occurs, the operating switch button will be returned to the off position by the fluidic circuit.

The manual valve is provided to allow fueling in the event that the fluidic circuit is inoperative. This could occur as a result of a malfunction or because the fuel pressure in the delivery line is below a safe value for automatic shutoff operation. The manual valve bypasses the fluidic circuit and positions the main valve directly by applying a pressure force on the main valve piston. Manual fueling begins when the operator presses the manual valve button. The button is spring loaded to ensure that the operator remains at the nozzle while fueling is in progress. Fueling stops as soon as the button is released.

The hose coupling is a military standard cam-lock quick disconnect.

C.3 OPERATING PRINCIPLES

The schematic diagram in Figure C-3 shows all the principal operating components of the fluidic closed-connect fueling device. They are: the Main Valve, the Operating Switch, the Fluidic Amplifier, the Float-Operated Valve and the Manual Valve. All of these components, except the float operated valve, are located within the nozzle.

The nozzle is connected to a fuel pump with a hoseline and the fuel enters the nozzle into an annular cavity, A, that surrounds the main valve, B. The valve is shown partially open but when it moves to the right it seats at C and the valve is off. When open, the fuel passes from the cavity, A, [illegible] the valve into the cavity, D. This cavity is in the body of the nozzle between the valve B and the nozzle closed-connect coupling. If the nozzle is connected to the receptacle, the closed-connect flow passage is open and the fuel continues on into the vehicle tank.

It will be noted that the main valve is only one part of an assembly that consists otherwise basically of a piston. The piston actually is powered by pressures established in the chambers, E and F. The schematic also shows that the chambers are sealed from one another and from other pressures by rolling diaphragm seals. Actually, although pairs of seals are shown at G and H, the final design used only one diaphragm at points G, H, and I. However, operating fundamentals are unaffected by this difference.

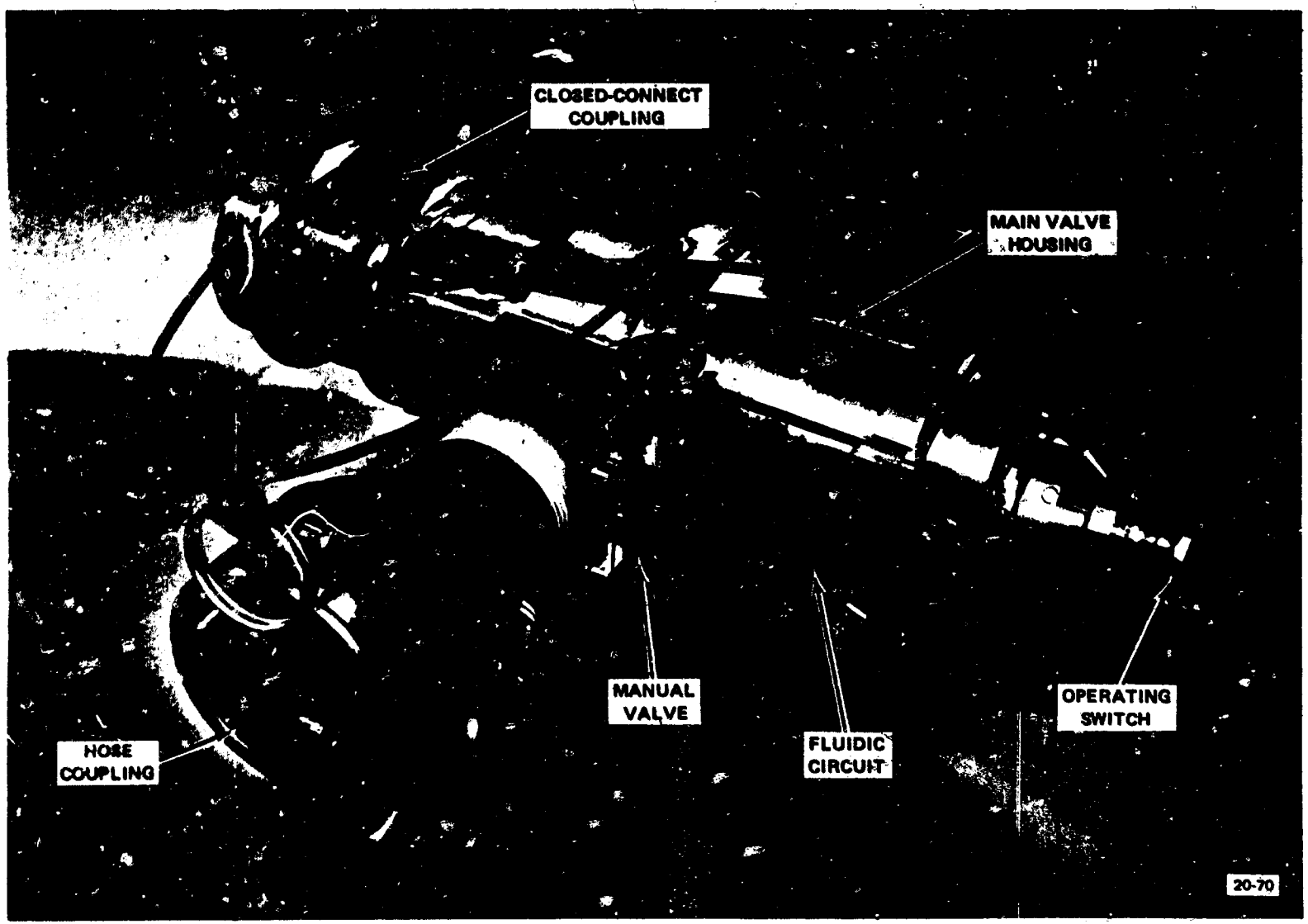

Figure C-2 - Fluidic Closed-Connect Fueling Nozzle

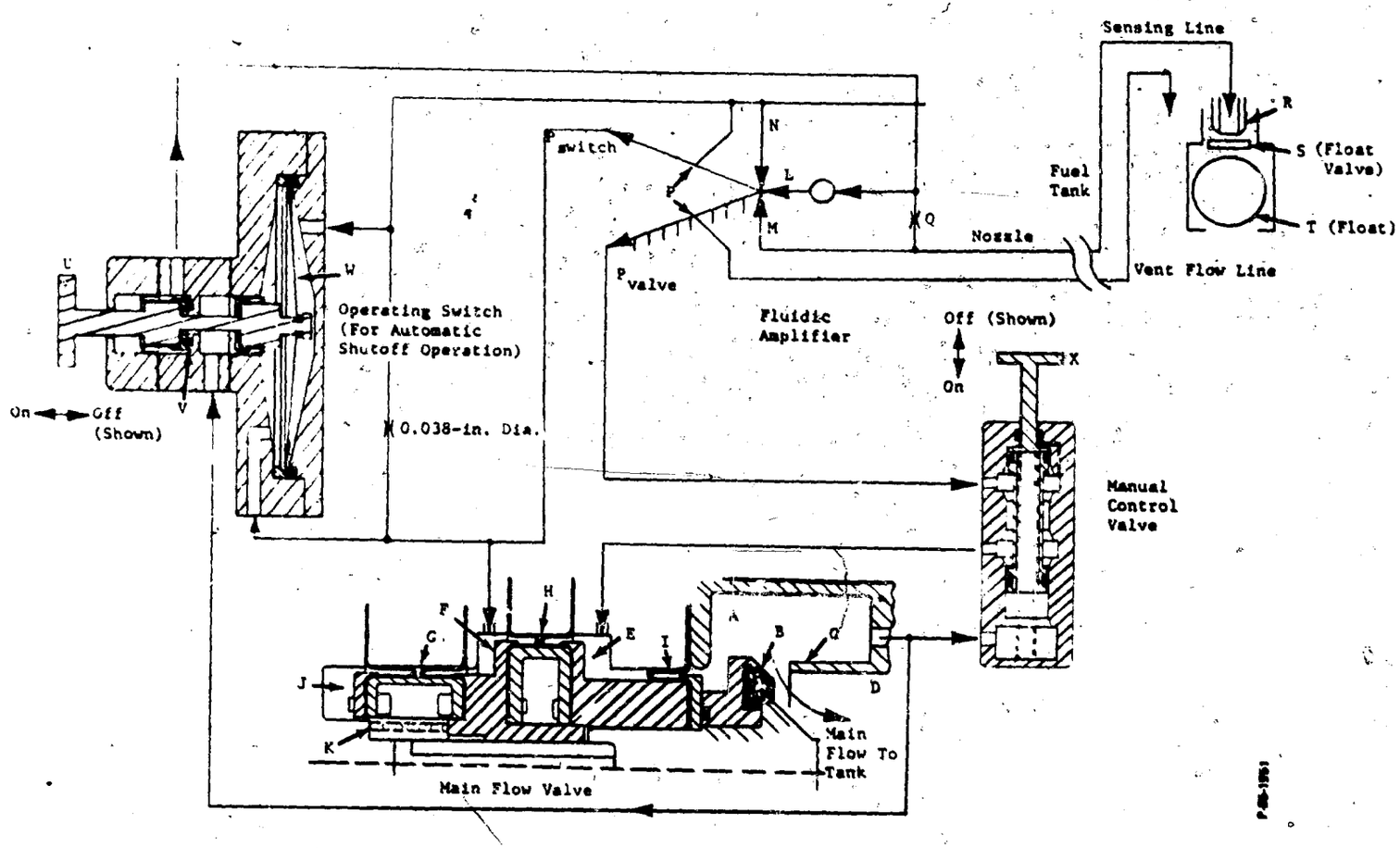

Figure C-3 - Control Circuit Schematic

The valve assembly is designed to be statically pressure balanced in both the closed and open positions. In the closed position, this is achieved by making the effective diameter at point I equal to that of the seat, C. Thus, the pressure in cavity A can exert no force on the closed valve. When open, the pressure of the fuel in cavity D is referenced to cavity J. Since the effective diameter at point G is also about equal to the diameter of the seat C, the pressure forces again cancel one another. Therefore, the static positioning forces exerted on the valve are those due to pressure differentials between cavities E and F acting on the piston and the variable force exerted by the return spring, K.

The spring is preloaded to provide a minimum required seating force on the valve in the closed position to prevent any leakage. As the valve moves open, the spring is compressed and provides a stored return force to close the valve when shutoff is desired.

The piston is sized to move the valve against the spring using the pressure differential available in the chambers E and F. This pressure differential is a function of the pressure in the annular cavity A and the fluidic amplifier characteristics.

The fluidic amplifier is a jet-on-jet monostable device. Detailed description of the principles of its operation is beyond the scope of this discussion. The reader is referred to Appendix B of this report for a fundamental discussion. However, the amplifier can be described as consisting of a power nozzle through which fuel flows continuously during automatic operation. The fuel is supplied at a pressure very near to that existing in cavity A. At right angles to this flow are two opposing flow paths. One, M, is termed the control, and the other, N, is the bias. The cross-hatching on the amplifier output leg labelled P_{valve} indicates that, for this type of amplifier (monostable), the flow from the power nozzle will always issue from this leg unless certain deliberate actions are taken at the bias and control flow paths. If a pressure is applied in path M (the control), a flow will take place through the control port. The port is located very near to the area immediately downstream of the power nozzle. This flow, if of proper magnitude, will cause the power jet flow to issue from the amplifier output leg labelled P_{switch}. However, it will only continue to do so while flow continues through the control port.

The bias port is similar to the control except that it is larger in area. Actually, this is how the amplifier is made to be monostable. The bias port is passive in this application in that it is only connected to a sump pressure (reference pressure) to ensure that the port is kept flooded with fuel. The reference or sump for this application is the vehicle fuel tank. A sump is required because the amplifier flows continuously and the flow across the amplifier power nozzle, M, can only take place if a lower pressure exists in the region immediately downstream of M. If the flow tending to exit from the amplifier output leg is directed to a load that is essentially blocked such as the piston chamber E, then the amplifier output legs must be vented. That is, the

flow from the power nozzle must be removed from the output leg and returned to a sump (the fuel tank again, in this case). Therefore, it will be noted from the figure that the bias port N and the two leg vents P are connected and directed through a line to the fuel tank.

The pressure in the control path and at the control port, M, is established basically by two fixed orifices and a variable orifice. Referring to the schematic, it can be seen that the same line that furnishes fuel to the amplifier supply nozzle also directs fuel to the control port. However, since it first passes through the orifice Q and is also directed to the orifice R in parallel with the control port orifice, it can be seen that the pressure in the control path will be lower if the float operated valve, S, is open. By properly sizing orifices Q and R (also in relationship to the control port orifice) the pressure in the control path will be too low to cause the power nozzle flow to switch from the output leg, P_{valve} as long as the float valve S is fully open.

Because the float valve and float, T, are located in the fuel tank, the float will close valve S when the fuel level rises and causes the float to move against the valve. Locating the float valve at the desired full level in the tank will thus cause the control pressure to rise when the tank is full. The pressure in the control path will tend to approach the amplifier supply nozzle pressure as the valve S closes. As soon as the control pressure reaches about 20 percent of the supply pressure, the amplifier output will switch to the P_{switch} leg. Of course, the whole purpose of this circuit is to provide a pressure with which the main fuel valve can be positioned open to fuel a vehicle and automatically positioned shut when the tank fills. Therefore, the flow from the P_{valve} output leg of the amplifier is directed to the piston on the main valve. The P_{switch} output is directed to a cavity located in the operating switch. This function is explained later. The cavity F is referenced to the relatively low pressure in the fuel tank. When the float valve is open, indicating a low fuel level in the tank, P_{valve} pressure in piston cavity, E, is high in relation to the sump pressure in cavity F and the resultant pressure differential across the piston opens the valve. When the float closes the float valve, indicating a full tank, P_{valve} becomes equal to the sump pressure, the piston pressure differential becomes equal to zero, and the spring force closes the valve and stops the fueling operation.

The operating switch performs two important functions. When an operator lifts the button, U, fuel from the annular cavity A is directed through the gating valve, V, to the supply nozzle of the fluidic amplifier and to the control path circuit. This actuates the fluidic circuit and, if the float valve, S is open, the amplifier P_{valve} output pressure is high and the main valve B opens.

When the fluidic circuit senses that the fuel tank is full and switches to close the main valve, the amplifier is still active. Thus, the amplifier flow would continue after the main valve stops the main flow to the tank. Shutting down the fluidic amplifier is the second important function performed by the operating switch.

It will be noted that the amplifier P_{switch} output pressure is referenced to one side of a diaphragm, W, that is attached to the valve V. When the amplifier switches to shut the main valve, B, the pressure, P_{switch}, goes high. Since the opposite side of the diaphragm is referenced to the relatively low sump pressure (approximately equal to fuel tank pressure), the resultant differential pressure across the diaphragm forces the gating valve, V, closed. This shuts off the flow of fuel to the fluidic circuit, completing the nozzle shutoff operation.

The diaphragm, W, is actually a metallic Belleville spring washer designed for snap-through action. That is, it has only two stable positions (bistable) - inverted in one direction or the other. This provides a positive positioning action for the operating switch. The diaphragm is installed so that it does not reach its relaxed position in the closed direction. Instead, the gating valve hits its seat first. This provides a spring force to hold the gating valve tightly closed.

One important feature of the nozzle during automatic operation is the self-regulating characteristic of the fluidically controlled main valve assembly. Automatic operation only proceeds when the pressure supplied to the amplifier is sufficiently high to maintain reliable operation of the fluidic shutoff circuit. Below this pressure, the main valve is shut regardless of the position of the operating switch.

The pressure differential across the main valve piston is a function of the amplifier characteristics and the amplifier supply pressure. Thus, in the open position, as the supply pressure decays, the piston pressure differential reduces and the spring moves the valve in the closed direction. Eventually, when the pressure reaches a predetermined low value, the valve closes. Of course, if the pressure is already low when the operating switch is lifted, the valve will remain closed.

In the event that the pressure is too low for automatic operation, or if the fluidic circuit becomes inoperative, fueling can continue in the manual mode. This is done by pushing down on the button, X, on the Manual Valve. This valve is spring loaded in the closed direction so that it closes when the button is released.

Pushing downward or in on the button moves a spool valve to block the passage of the amplifier P_{valve} signal to the piston cavity E. Instead, the pressure in the annular cavity A is directly applied to the piston cavity, E. The other piston cavity, F, will be at fuel tank pressure and the result is that the main valve, A, will open and fueling proceeds.

The manual valve allows fueling at delivery pressures approximately 50 percent of those required for automatic operation.

Unclassified

Security Classification

DOCUMENT CONTROL DATA - R&D

(Security classification of title, body of abstract and indexing annotation must be entered when the overall report is classified)

1. ORIGINATING ACTIVITY (Corporate author) The Bendix Corporation Bendix Research Laboratories Southfield, Michigan 48075	2a. REPORT SECURITY CLASSIFICATION Unclassified 2b. GROUP

3. REPORT TITLE

Fluidics for Control of Military Fuel Handling Operations

4. DESCRIPTIVE NOTES (Type of report and inclusive dates)

Final Report - November 68 to August 70

5. AUTHOR(S) (Last name, first name, initial)

Barnard, Daniel, D.

6. REPORT DATE August 1970	7a. TOTAL NO. OF PAGES 191	7b. NO. OF REFS 0
8a. CONTRACT OR GRANT NO. DAAK02-69-C-0123 b. PROJECT NO. 1J664717D58410 c. N/A d. N/A	9a. ORIGINATOR'S REPORT NUMBER(S) 5293 9b. OTHER REPORT NO(S) (Any other numbers that may be assigned this report)	

10. AVAILABILITY/LIMITATION NOTICES This document is subject to special export controls and each transmittal to foreign governments or foreign nationals may be made only with prior approval of the U. S. Army Mobility Equipment Research and Development Center, Fort Belvoir, Virginia 22060

11. SUPPLEMENTARY NOTES	12. SPONSORING MILITARY ACTIVITY Fuels Handling Equipment Division U. S. Army MERDC Fort Belvoir, Virginia 22060

13. ABSTRACT

A prototype fluidically controlled automatic shutoff closed-connect fueling device was developed, demonstrated and delivered to the U. S. Army MERDC. Concurrently a study was made of the practicability of fluidics for applications to control of various military fuel handling operations.

The fueling device uses a single fluidic amplifier, powered by the fuel, to position a valve in the nozzle for fueling and to shut the valve upon receipt of a sensing signal indicating a full tank. The closed-connect feature minimizes fuel contamination and reduces fueling time; the tank receptacle can be simply field-altered for normal fueling.

The study considered fluidics for control of automatic pipeline pump stations, storage tank quantity gaging, tank farm manifold control, fuel interface detection in pipelines, fuel dispensing pump control, filter/separator water dump control and automatic switching between filter/separator units.

DD FORM 1 JAN 64 1473

Unclassified

Security Classification

Unclassified
Security Classification

14. KEY WORDS	LINK A ROLE	LINK A WT	LINK B ROLE	LINK B WT	LINK C ROLE	LINK C WT

INSTRUCTIONS

1. ORIGINATING ACTIVITY: Enter the name and address of the contractor, subcontractor, grantee, Department of Defense activity or other organization *(corporate author)* issuing the report.

2a. REPORT SECURITY CLASSIFICATION: Enter the overall security classification of the report. Indicate whether "Restricted Data" is included. Marking is to be in accordance with appropriate security regulations.

2b. GROUP: Automatic downgrading is specified in DoD Directive 5200.10 and Armed Forces Industrial Manual. Enter the group number. Also, when applicable, show that optional markings have been used for Group 3 and Group 4 as authorized.

3. REPORT TITLE: Enter the complete report title in all capital letters. Titles in all cases should be unclassified. If a meaningful title cannot be selected without classification, show title classification in all capitals in parenthesis immediately following the title.

4. DESCRIPTIVE NOTES: If appropriate, enter the type of report, e.g., interim, progress, summary, annual, or final. Give the inclusive dates when a specific reporting period is covered.

5. AUTHOR(S): Enter the name(s) of author(s) as shown on or in the report. Enter last name, first name, middle initial. If military, show rank and branch of service. The name of the principal author is an absolute minimum requirement.

6. REPORT DATE: Enter the date of the report as day, month, year; or month, year. If more than one date appears on the report, use date of publication.

7a. TOTAL NUMBER OF PAGES: The total page count should follow normal pagination procedures, i.e., enter the number of pages containing information.

7b. NUMBER OF REFERENCES: Enter the total number of references cited in the report.

8a. CONTRACT OR GRANT NUMBER: If appropriate, enter the applicable number of the contract or grant under which the report was written.

8b, 8c, & 8d. PROJECT NUMBER: Enter the appropriate military department identification, such as project number, subproject number, system numbers, task number, etc.

9a. ORIGINATOR'S REPORT NUMBER(S): Enter the official report number by which the document will be identified and controlled by the originating activity. This number must be unique to this report.

9b. OTHER REPORT NUMBER(S): If the report has been assigned any other report numbers *(either by the originator or by the sponsor)*, also enter this number(s).

10. AVAILABILITY/LIMITATION NOTICES: Enter any limitations on further dissemination of the report, other than those imposed by security classification, using standard statements such as:

(1) "Qualified requesters may obtain copies of this report from DDC."

(2) "Foreign announcement and dissemination of this report by DDC is not authorized."

(3) "U. S. Government agencies may obtain copies of this report directly from DDC. Other qualified DDC users shall request through _____."

(4) "U. S. military agencies may obtain copies of this report directly from DDC. Other qualified users shall request through _____."

(5) "All distribution of this report is controlled. Qualified DDC users shall request through _____."

If the report has been furnished to the Office of Technical Services, Department of Commerce, for sale to the public, indicate this fact and enter the price, if known.

11. SUPPLEMENTARY NOTES: Use for additional explanatory notes.

12. SPONSORING MILITARY ACTIVITY: Enter the name of the departmental project office or laboratory sponsoring *(paying for)* the research and development. Include address.

13. ABSTRACT: Enter an abstract giving a brief and factual summary of the document indicative of the report, even though it may also appear elsewhere in the body of the technical report. If additional space is required, a continuation sheet shall be attached.

It is highly desirable that the abstract of classified reports be unclassified. Each paragraph of the abstract shall end with an indication of the military security classification of the information in the paragraph, represented as *(TS)*, *(S)*, *(C)*, or *(U)*.

There is no limitation on the length of the abstract. However, the suggested length is from 150 to 225 words.

14. KEY WORDS: Key words are technically meaningful terms or short phrases that characterize a report and may be used as index entries for cataloging the report. Key words must be selected so that no security classification is required. Identifiers, such as equipment model designation, trade name, military project code name, geographic location, may be used as key words but will be followed by an indication of technical context. The assignment of links, rules, and weights is optional.

Unclassified
Security Classification