UNCLASSIFIED

AD NUMBER

AD872620

NEW LIMITATION CHANGE

TO

Approved for public release, distribution unlimited

FROM

Distribution authorized to U.S. Gov't. agencies only; Administrative/Operational Use; JUN 1970. Other requests shall be referred to Headquarter, Deputy Chief of Staff for Logistics, Attn: DI-IFSO, Washington, DC 20310.

AUTHORITY

ODCSL, D/A ltr, 11 Jan 1974

THIS PAGE IS UNCLASSIFIED

AD872620

SECTION IV OF THE REAL PROPERTY MAINTENANCE ACTIVITIES (RPMA) FUNCTIONAL DESIGN FOR THE INTEGRATED FACILITIES SYSTEM

PRC R-1209
Volume II, Part 3
June 1970

AD No. ____
DDC FILE COPY

Prepared for

Department of the Army
Deputy Chief of Staff for Logistics
Director of Installations

DDC
RECEIVED
AUG 13 1970
C

Each transmittal of this document outside the agencies of the US Government must have prior approval of HQ DA, ATTN: DCSLOG/DI-IFSO. Wash D.C. 20301

PLANNING RESEARCH CORPORATION
LOS ANGELES, CALIFORNIA WASHINGTON, D.C.

SECTION IV OF THE REAL PROPERTY MAINTENANCE ACTIVITIES (RPMA) FUNCTIONAL DESIGN FOR THE INTEGRATED FACILITIES SYSTEM

PRC R-1209

Volume II, Part 3

June 1970

Prepared for

Department of the Army
Deputy Chief of Staff for Logistics
Director of Installations

By

John G. Cleveland (Task Coordinator)

Edward J. Harms
Walter Jamieson
(H. B. Maynard)
John H. Linden
Harvey R. Meltzer
John W. Nocita
Barry Reichert
Robert K. Wood

F. Gordon Barry, Project Manager
Robert M. Briden, Deputy Project Manager

Each transmittal of this document outside the agencies of the US Government must have prior approval of HQ DA, ATTN: DCSLOG/DI-IFSO.

PLANNING RESEARCH CORPORATION

Universal Building North • Suite 1030 • 1875 Connecticut Avenue N.W • Washington, D C 20009

DEPARTMENT OF THE ARMY
OFFICE OF THE DEPUTY CHIEF OF STAFF FOR LOGISTICS
WASHINGTON, D.C. 20310

The detailed functional design described in this section depicts the proposed Real Property Maintenance Activities (RPMA) portion of the Integrated Facilities System (IFS) as of December 1969; since December the functional design has evolved, particularly in regard to data elements and data use identifiers. It therefore then can be expected that the design as depicted in Section IV of this report will be changed in the final detailed functional system requirement (DFSR) to be published in October 1970.

TABLE OF CONTENTS

			Page
IV.	RPMA FUNCTIONAL DESIGN		IV-1
	A.	Scope	IV-1
	B.	Functional Design Coding Structure	IV-1
	C.	Detailed Notional Functional Design by Management Function	IV-5
		Planning/Programming (URR)	IV-6
		MSC	IV-139
		MAFC	IV-169
		HQ DA	IV-199
		Planning	IV-212
		Programming	IV-216
		Budgeting (FURR)	IV-221
		MSC	IV-258
		MAFC	IV-283
		DA	IV-307
		Budgeting (SAWP)	IV-331
		MSC	IV-352
		MAFC	IV-377
		DA	IV-403
		Execution (MYRR)	IV-411
		MSC	IV-445
		MAFC	IV-467
		DA	IV-487
		Review (PYPR)	IV-502
		MSC	IV-547
		MAFC	IV-581
		DA	IV-615
	D.	Function and Operation Flow Charts by Echelon	IV-633
	E.	Variations from RPMA Notional Design	IV-700
		1. Variation 1	IV-701
		2. Variation 2 - AMC (Less GOCO)	IV-702
		3. Variation 3 - GOCO	IV-703

The following pages, which contained RPMA report formats, have been deleted. The report formats have been revised, and now appear only once, in Section III, published separately with the remainder of this report:

Pages

124 - 130
162 - 168
193 - 198
244 - 250
276 - 282
301 - 306
337 - 344
368 - 376
394 - 402
435 - 438
463 - 466
482 - 486
523 - 540
562 - 580
597 - 616

IV. RPMA FUNCTIONAL DESIGN

A. Scope

The detailed functional design for RPMA is presented in this section in a manner that will provide a natural bridge from analysis and functional design to the detailed functional system requirements later in Phase IIB. The technique for presenting the functional design uses standard data description forms that are formatted to identify each function and operation of each of the four command echelons. In addition, the specific data elements that are input and output, and their sources and destination, are identified to enable the reader to become as familiar with the details of the functional design as is desired or necessary. For definitions of the data elements presented in Section V, the reader is referred to Appendix B.

B. Functional Design Coding Structure

A standard coding structure has been developed for use in the functional design standard formats. This coding structure provides a vehicle for logically identifying and relating the elements of the functional design to echelons and management areas. The elements of the functional design covered by the coding structure are: functions, operations, files, data (inputs and outputs), and reports containing specified data elements. The function, operation, data, and report elements are related by the code structure to an echelon and to a management area within the echelon. The following paragraphs describe the functional design coding structure.

- Function--Consists of four characters that specify the echelon, management area, and function.

  1st character: Echelon code

  1 = Installation

  2 = Major subordinate command

  3 = Major Army field command

  4 = Headquarters, Department of the Army

2nd character: Management area code

P = Facility planning

A = Assets accounting

C = New construction

R = RPMA

M = Facility management

3rd and 4th characters: Function code

Numeric code (01-99), which identifies a function within a management area at an echelon

Example: 4R01 = Function one of the RPMA management area at HQ DA.

- Operation--Seven-digit code identifying an operation within a specific function.

1st four characters: Function code that the operation is a part of

5th character: Period separator between function and operation code

6th and 7th character: Operation code

Numeric code (01-99), which identifies an operation within a function

Example: 4R01.01 = Operation one of function one of the RPMA management area at HQ DA.

- File--Consists of three characters which identify both internal and external files used by the system.

1st character: File source

S = Internal IFS file

x = External file

2nd and 3rd character: File code

Numeric code (01-99), which identifies the file

Example: S01 = Internal IFS file number one.

- Data (Input or Output)--Code for describing data inputs and outputs of the operations. The coding depends on which one of three conditions, a., b., or c., exists.

a. If data are input into an operation, and their source is not an RPMA operation (i.e., one of those described in the following pages), codification consists of the following segments:

(1) Operation code (7 characters) of operation into which data are entering.

(2) Period separator

(3) File source - either:

(a) File code (3 characters); if input is an IFS or external file

(b) The letter T

If the file source is indicated by T, it will be followed by:

(4) Period separator

(5) One-character numeric data identifier, which distinguishes these data from other inputs or outputs in the same operation.

Example: 4R01.01.T.2
4R01.01.S10

b. If data are output from an operation, coding is identical to 4a.

Example: 4R01.01.T.3

c. If data are input, and were generated from an RPMA operation, the codification is unchanged from that of the output of the operation.

Example: 4R01.01.T.2 was generated by operation 4R01.01, and might be input into 4P01.02

- Report--Ten-character code which identifies reports resulting from an operation.

  1st seven characters: Operation code that produces the report; 8th character: Period separator between operation code and report code

  9th character: Report symbol

  R = Report symbol

  10th character: Report numeric code

Example: 4R01.01.R1 = Report one of operation one of function one of the RPMA management area at HQ DA.

C. Detailed Notional Functional Design by Management Function

This section presents the detailed notional design of the RPMA management functions (planning, programming, budgeting, execution, and review). The functions (planning and programming addressed as one function) are presented separately; each function is discussed from the installation level to the HQ DA level, so that each function may be traced from the installation to HQ DA.

FUNCTION NARRATIVE (data flow through operations)

Function Name:
Planning

CODE: 1R01-4R01

In the RPMA planning function, the Unconstrained Requirements Report (URR) is used at all echelons of command as a planning tool. The planning function is directed primarily toward preparing the Army-wide RPMA input to the Army Strategic Objectives Plan (ASOP), the Joint Strategic Objectives Plan (JSOP), and the Defense Guidance Memorandum (DGM) on logistics guidance.

The URR is prepared at the installation by functional category. It addresses the target year beginning 15 months hence as well as the three remaining years of the Five-Year Defense Plan (FYDP). The projection of requirements for this first outyear is used in the RPMA planning function.

The URR is forwarded through functional management channels to higher echelons, where it is manipulated as described in the subsequent flow charts and formats.

In the RPMAO, planners use the data in the URR, as well as other data available to them (on future missions, for example) for making an unconstrained requirements estimate (URE) for the first outyear addressed in the URR. The URE becomes the basis for the Army-wide RPMA input into the following planning documents then in preparation that address the first outyear: ASOP, JSOP, and DGM on logistics guidance.

In the flow charts that follow, planning is for FY 73.

FUNCTION NARRATIVE (data flow through operations)

Function Name: Programming

CODE: 1R02-4R02

In the RPMA programming function, the URR is used at all echelons as a programming tool. The programming function is directed primarily toward preparing (1) RPMA input to program directors for developing the staff-developed Army budget estimate, and (2) specific RPMA guidance for the target year starting 13 months hence.

The URR is prepared at the installation by functional category and delineates requirements by program element or user. It addresses, in detail, the target year that begins 15 months after submission of the URR and the three remaining years of the Five-Year Defense Plann (FYDP).

The URR is forwarded through functional management channels to higher echelons, where it is manipulated as described in the subsequent flow charts and formats.

In the RPMAO, the URR is used as the basis for input to program directors to influence development of the staff-developed Army Budget Estimate. The URR is also used for developing specific RPMA functional guidance for the target year.

In the flow charts that follow, programming is for FY 72.

Functional Category 09

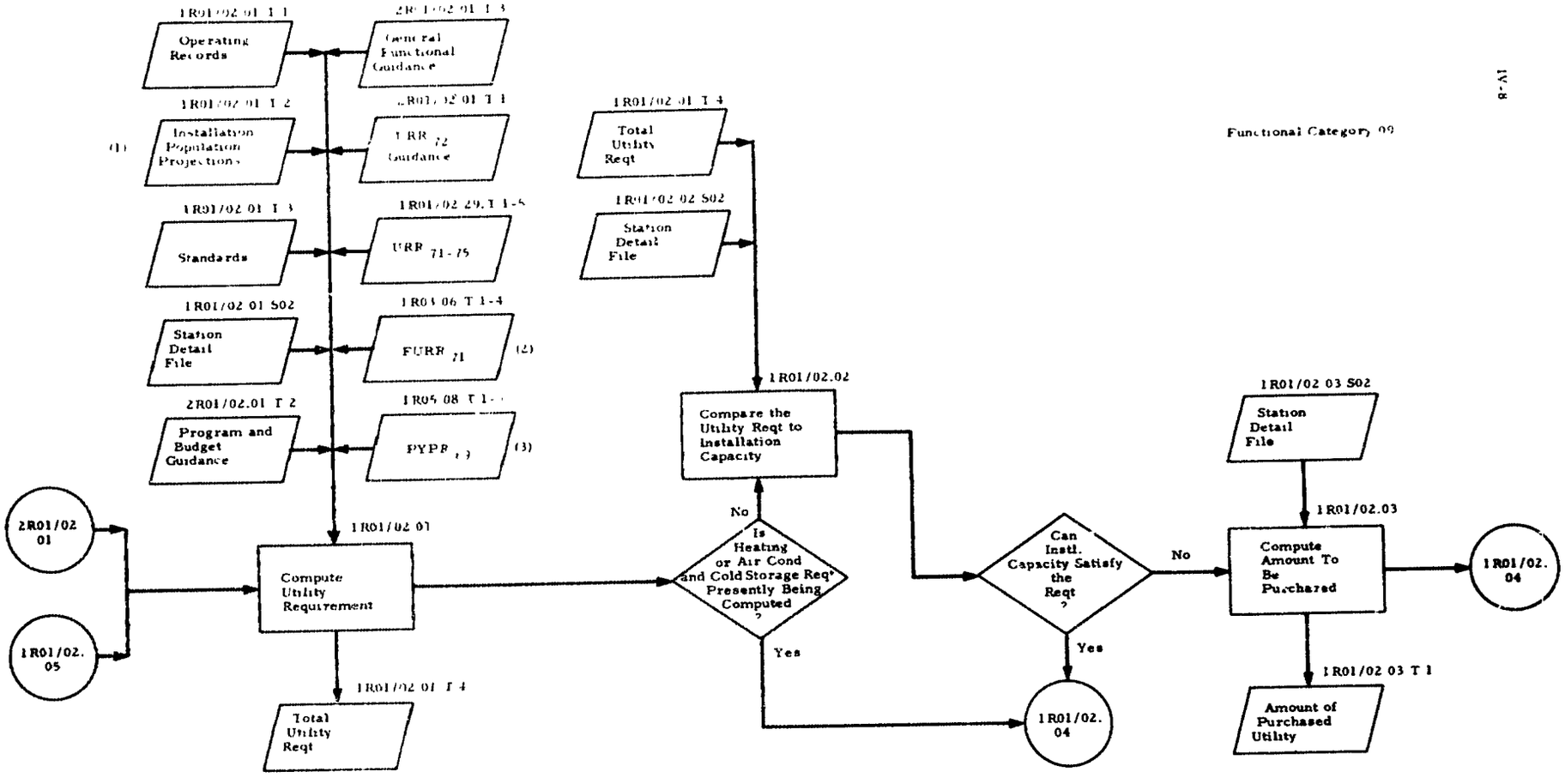

Notes: Subscript (e.g., URR71) denotes FY (Year of execution. FY72)

(1) Not used during air-condition and cold storage requirement computation.

(2) Used during air-condition and cold storage requirement computation only

(3) Not used during computation of water and heating requirements.

RPMA PLANNING AND PROGRAMMING FUNCTION
(INSTALLATION PREPARATION OF THE URR)

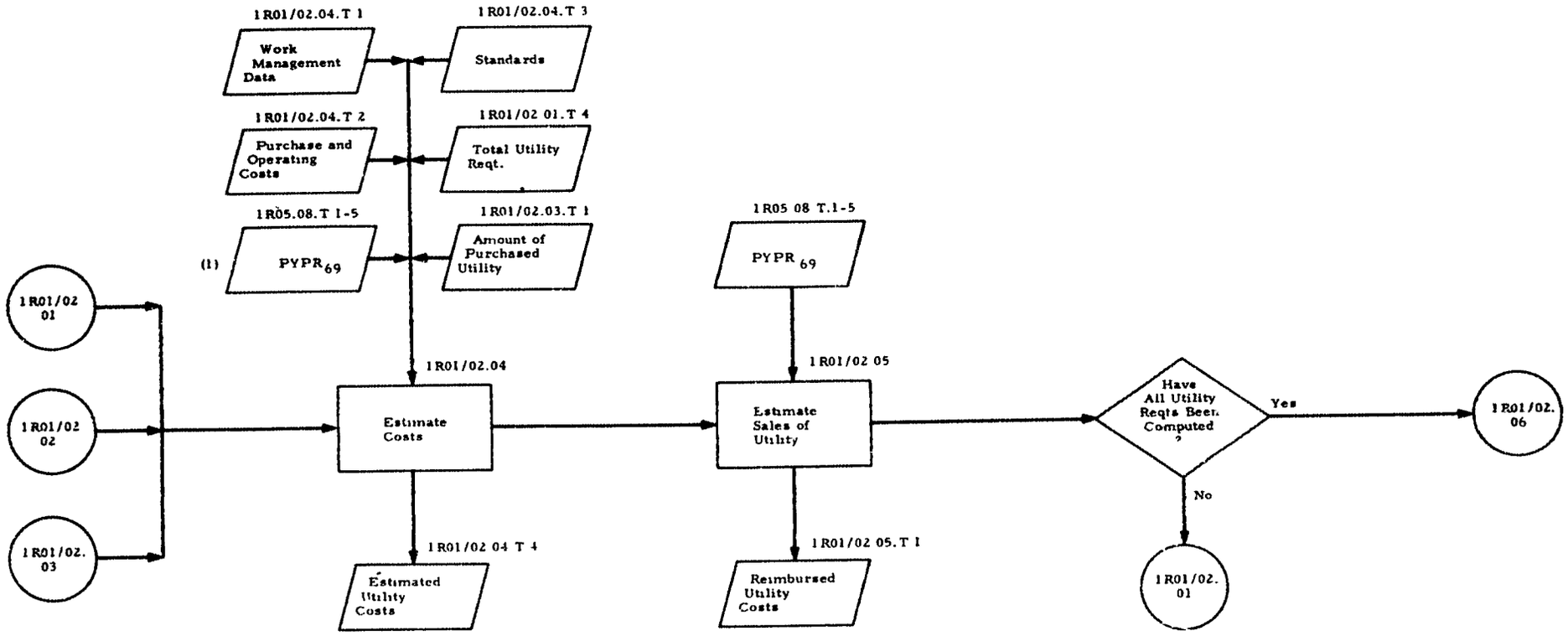

Note: Subscript (e g., URR_{71}) denotes FY (Year of execution: FY72)

(1) Not used during computation of heating or air-condition and cold storage costs

RPMA PLANNING AND PROGRAMMING FUNCTION
(INSTALLATION PREPARATION OF THE URR)

Functional Categories
09 and 12 (Refuse Handling)

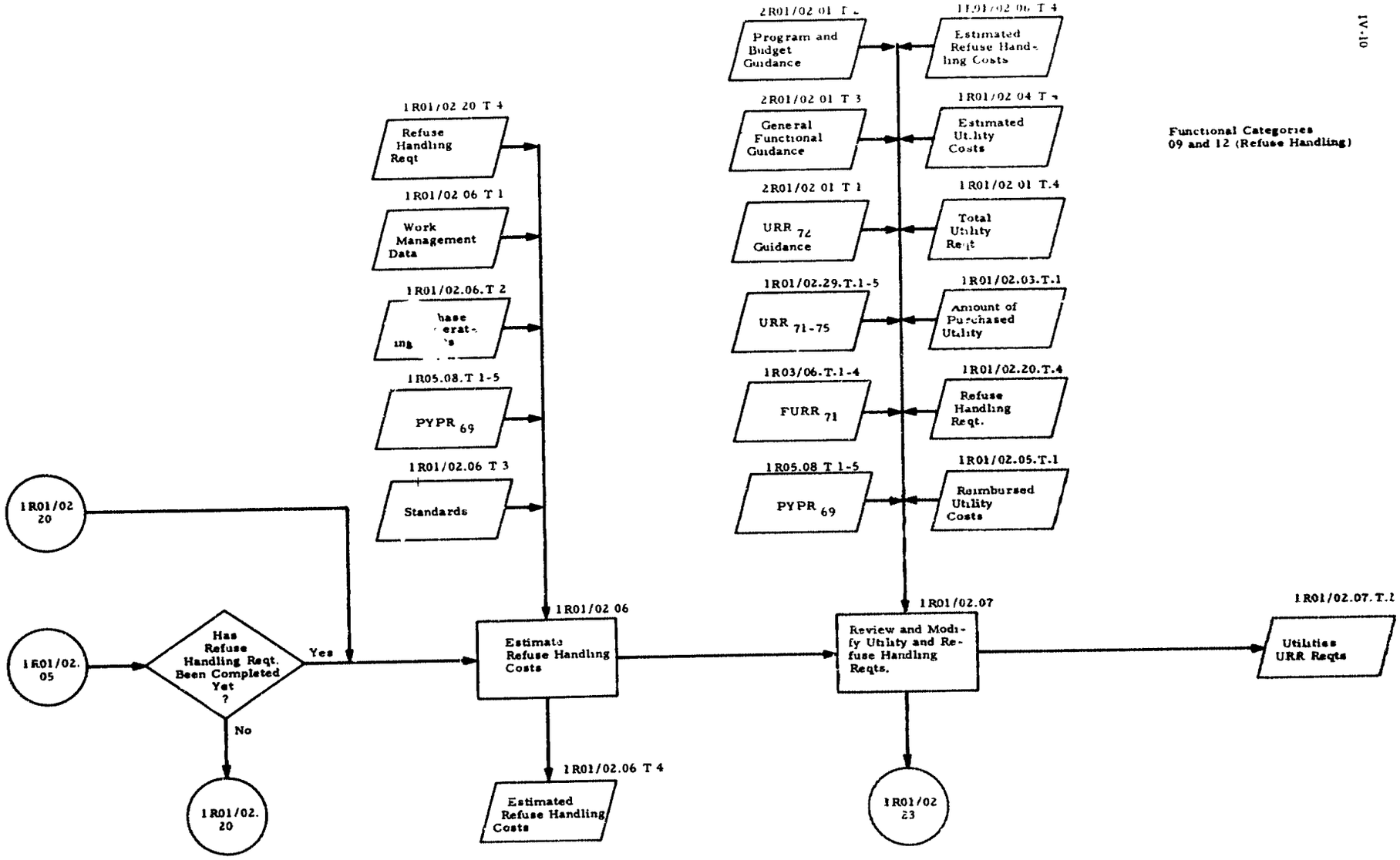

Note: Subscript (e.g., URR_{71}) denotes FY.
(Year of execution: FY72)

RPMA PLANNING AND PROGRAMMING FUNCTION
(INSTALLATION PREPARATION OF THE URR)

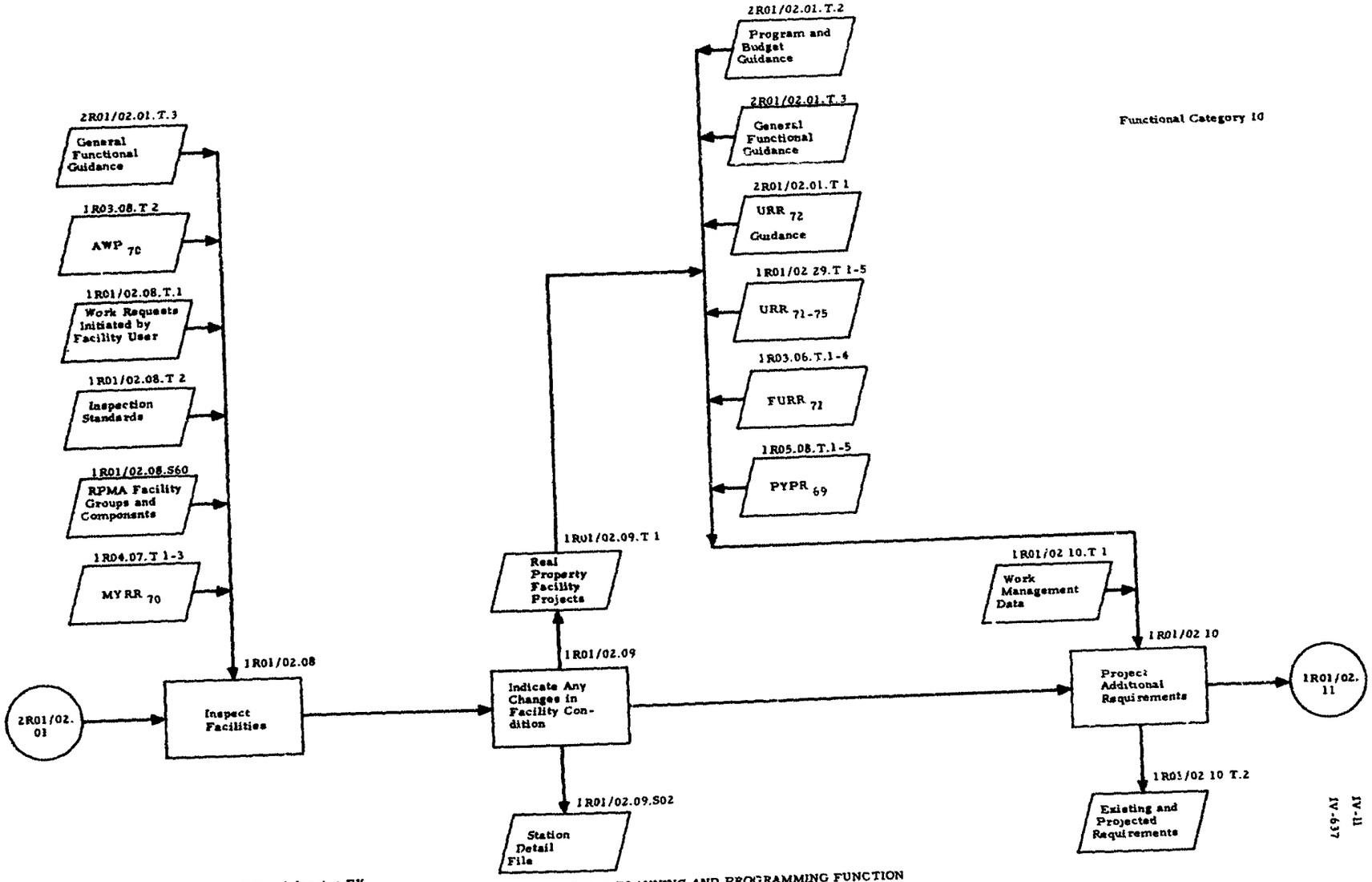

Functional Category 10

Note: Subscript (e.g., URR_{71}) denotes FY. (Year of execution: FY72)

RPMA PLANNING AND PROGRAMMING FUNCTION
(INSTALLATION PREPARATION OF THE URR)

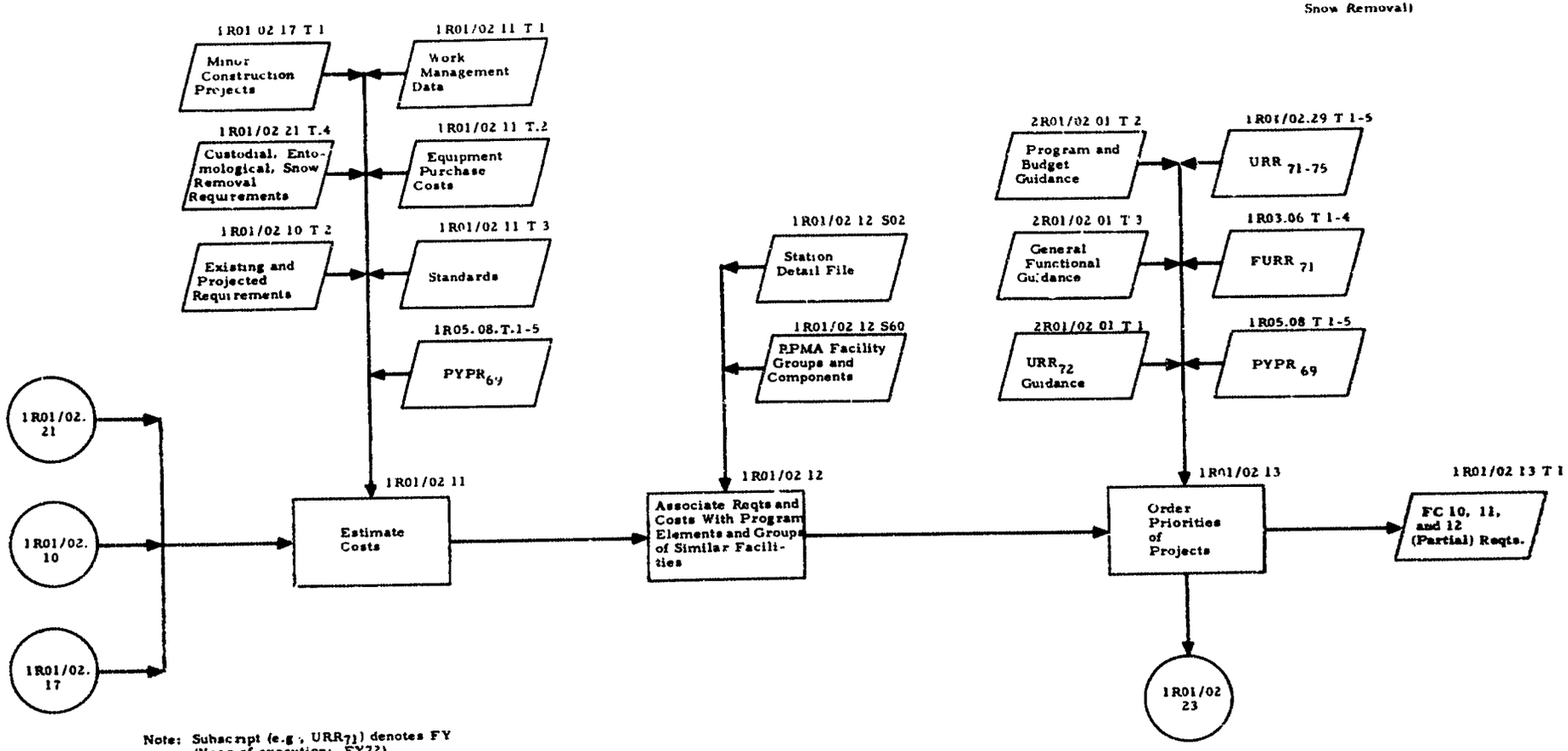

Note: Subscript (e.g., URR_{71}) denotes FY (Year of execution: FY72)

RPMA PLANNING AND PROGRAMMING FUNCTION
(INSTALLATION PREPARATION OF THE URR)

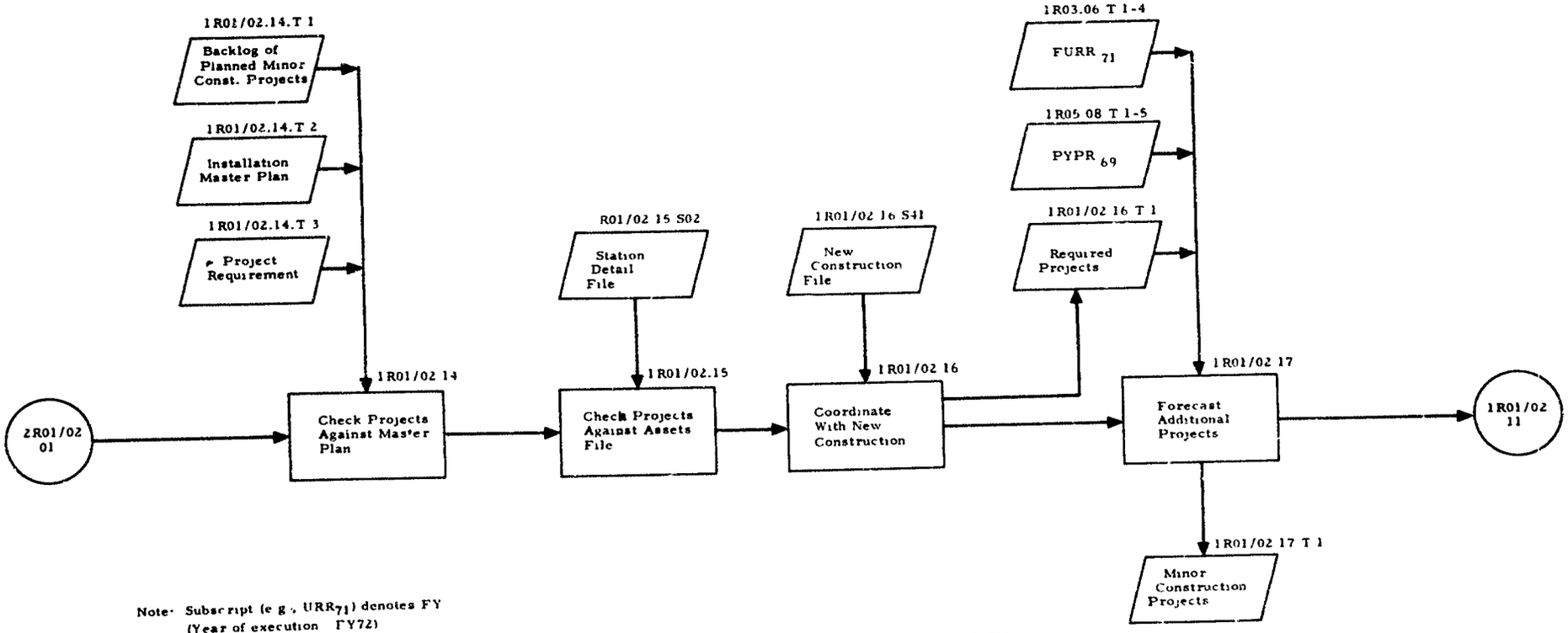

Note: Subscript (e.g., URR_{71}) denotes FY (Year of execution FY72)

RPMA PLANNING AND PROGRAMMING FUNCTION
(INSTALLATION PREPARATION OF THE URR)

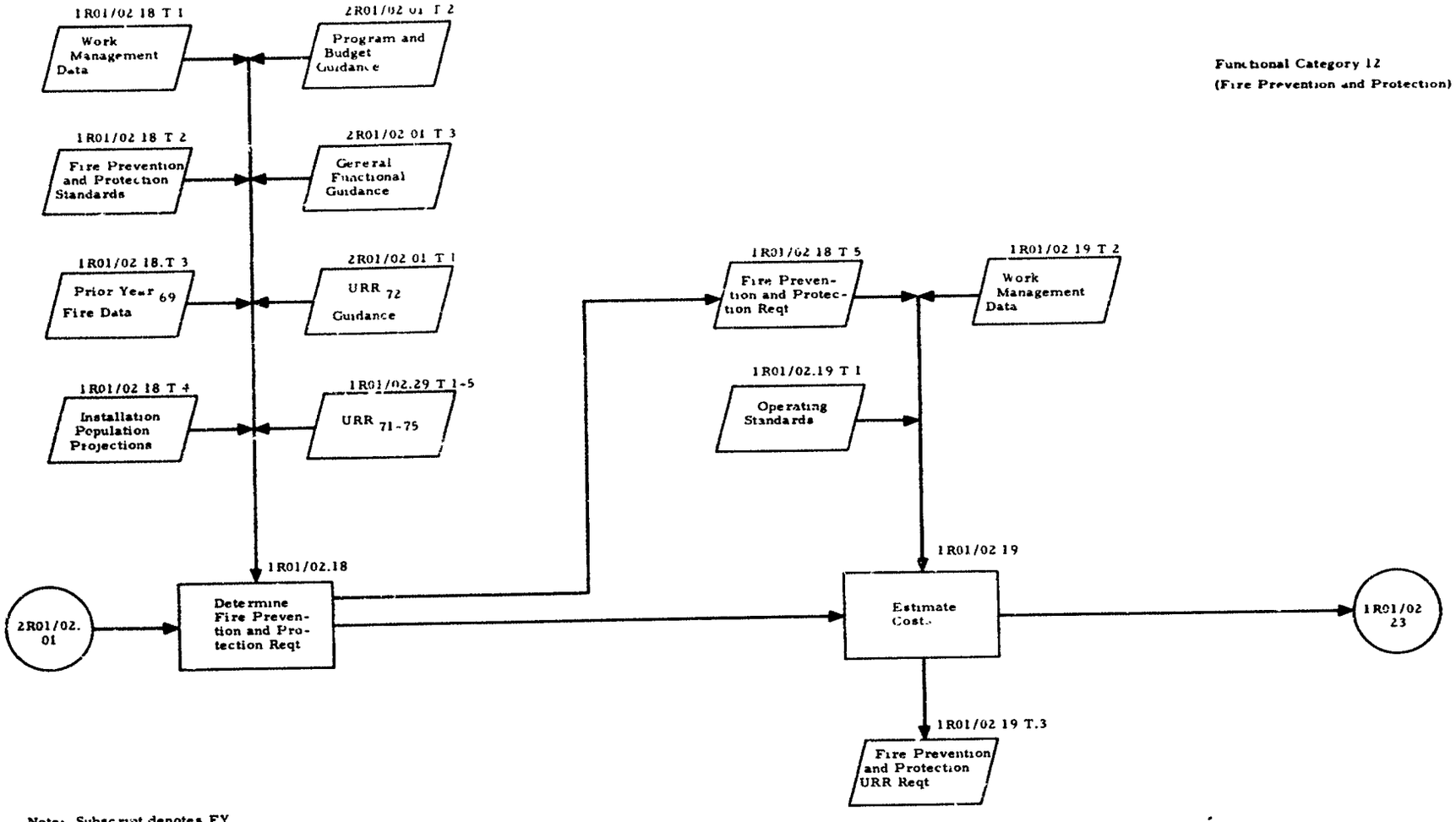

Functional Category 12
(Fire Prevention and Protection)

Note: Subscript denotes FY
(Year of execution: FY72)

RPMA PLANNING AND PROGRAMMING FUNCTION
(INSTALLATION PREPARATION OF THE URR)

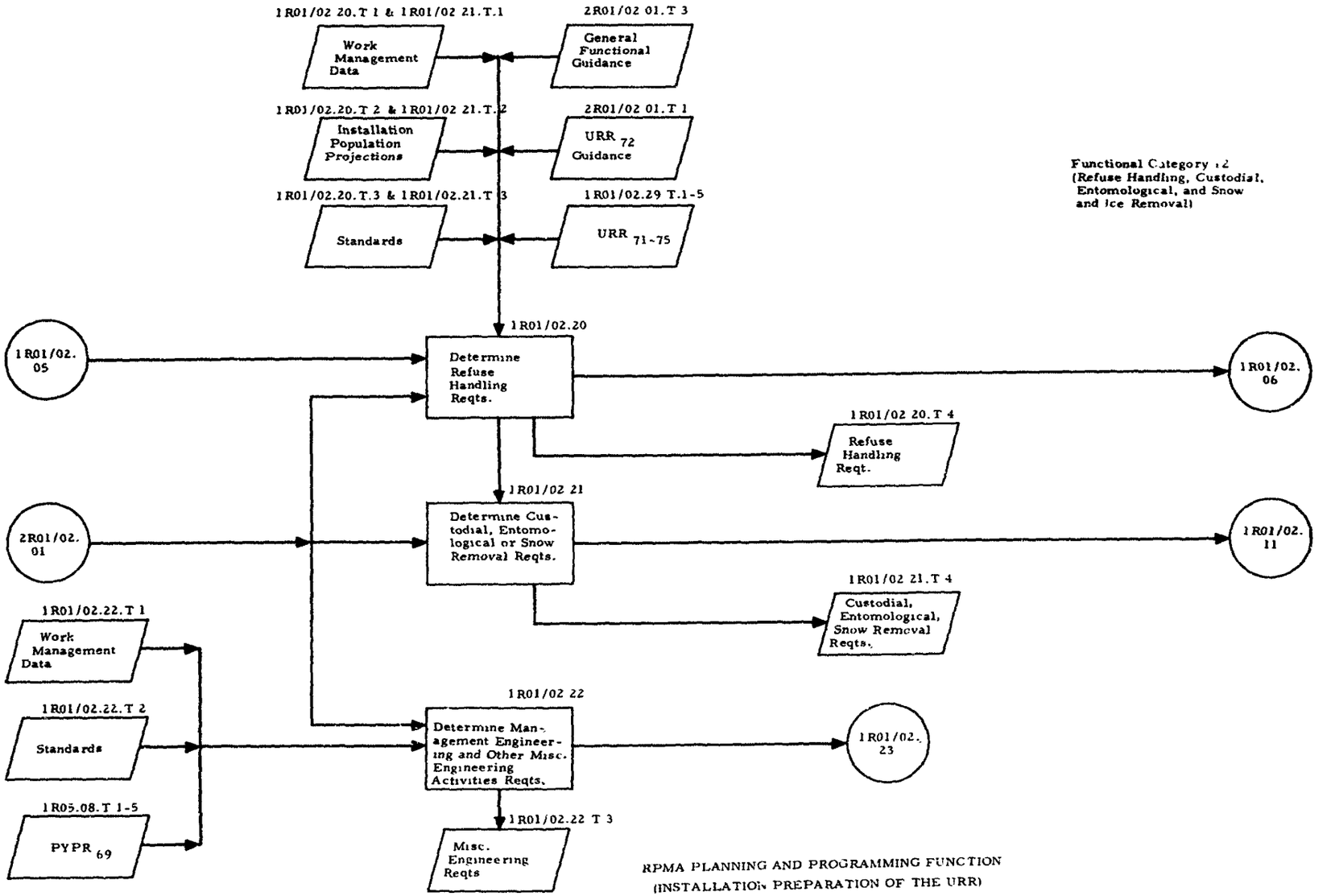

RPMA PLANNING AND PROGRAMMING FUNCTION
(INSTALLATION PREPARATION OF THE URR)

Note: Subscript (e.g., URR_{71}) denotes FY.
(Year of execution: FY72)

Consolidation of URR Reqts and Preparation of Summary (Work-Coordinating Office)

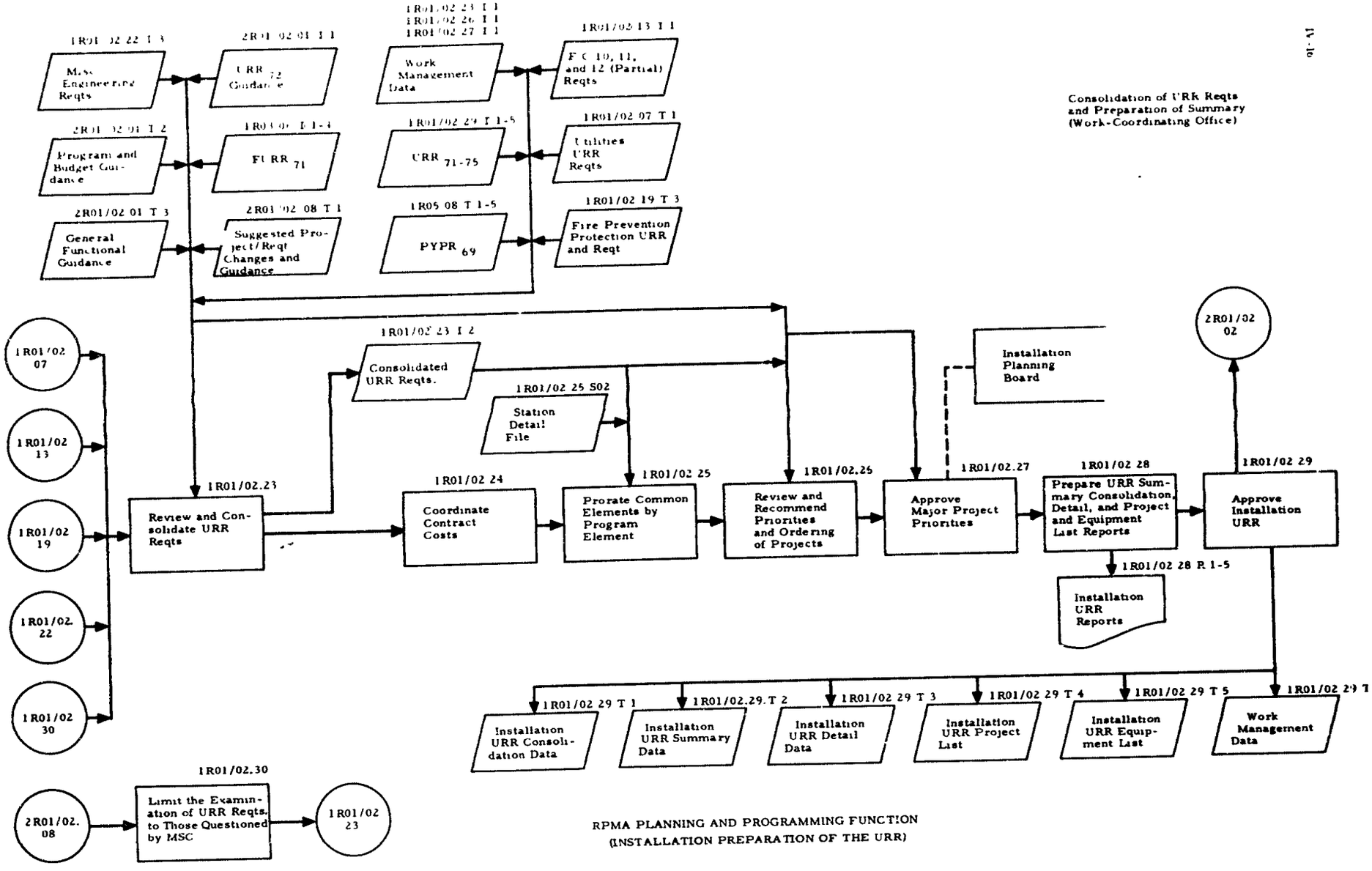

RPMA PLANNING AND PROGRAMMING FUNCTION
(INSTALLATION PREPARATION OF THE URR)

Note: Subscript denotes FY
(Year of Execution: FY72)

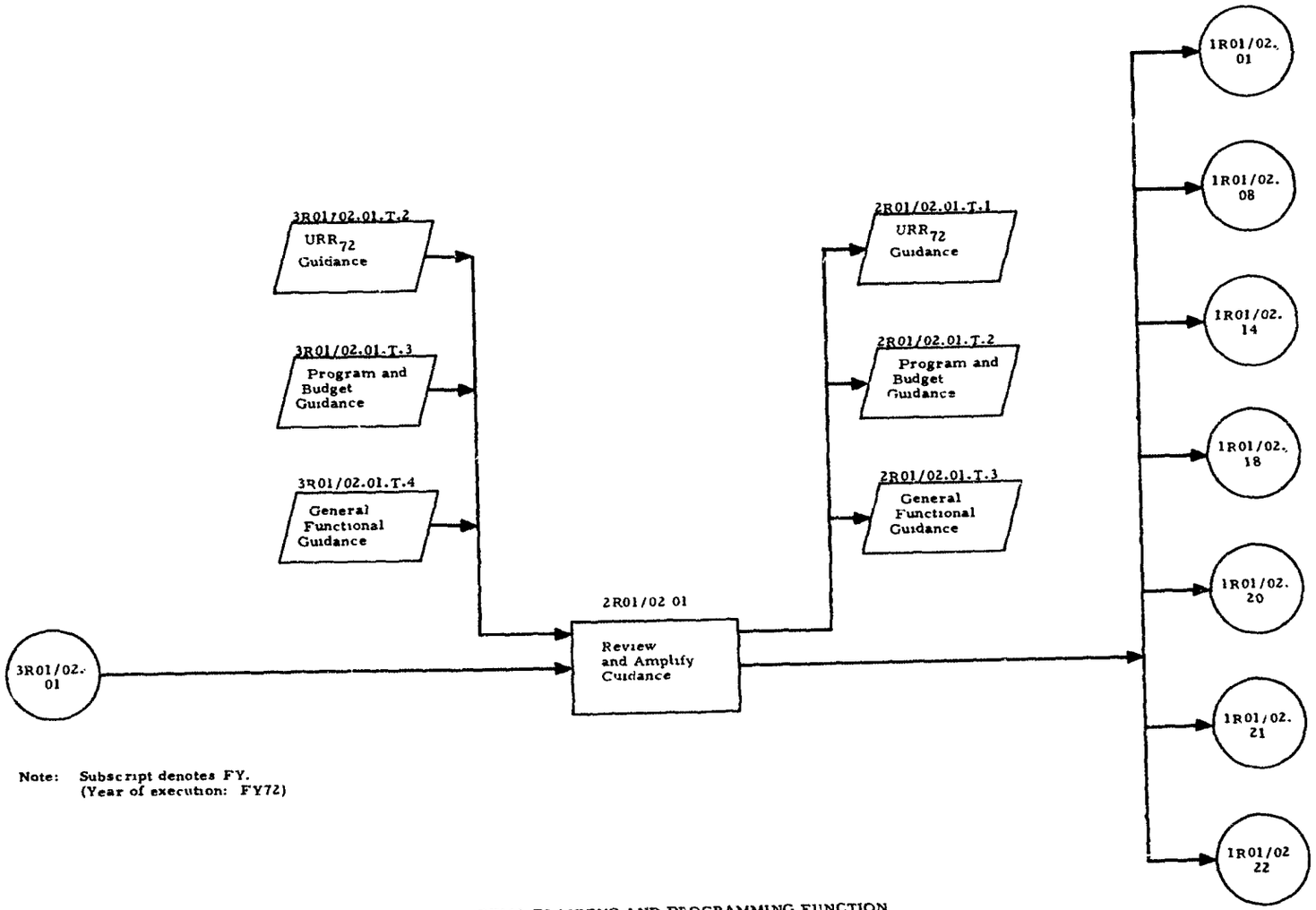

Note: Subscript denotes FY.
(Year of execution: FY72)

RPMA PLANNING AND PROGRAMMING FUNCTION
(MSC PREPARATION OF THE URR)

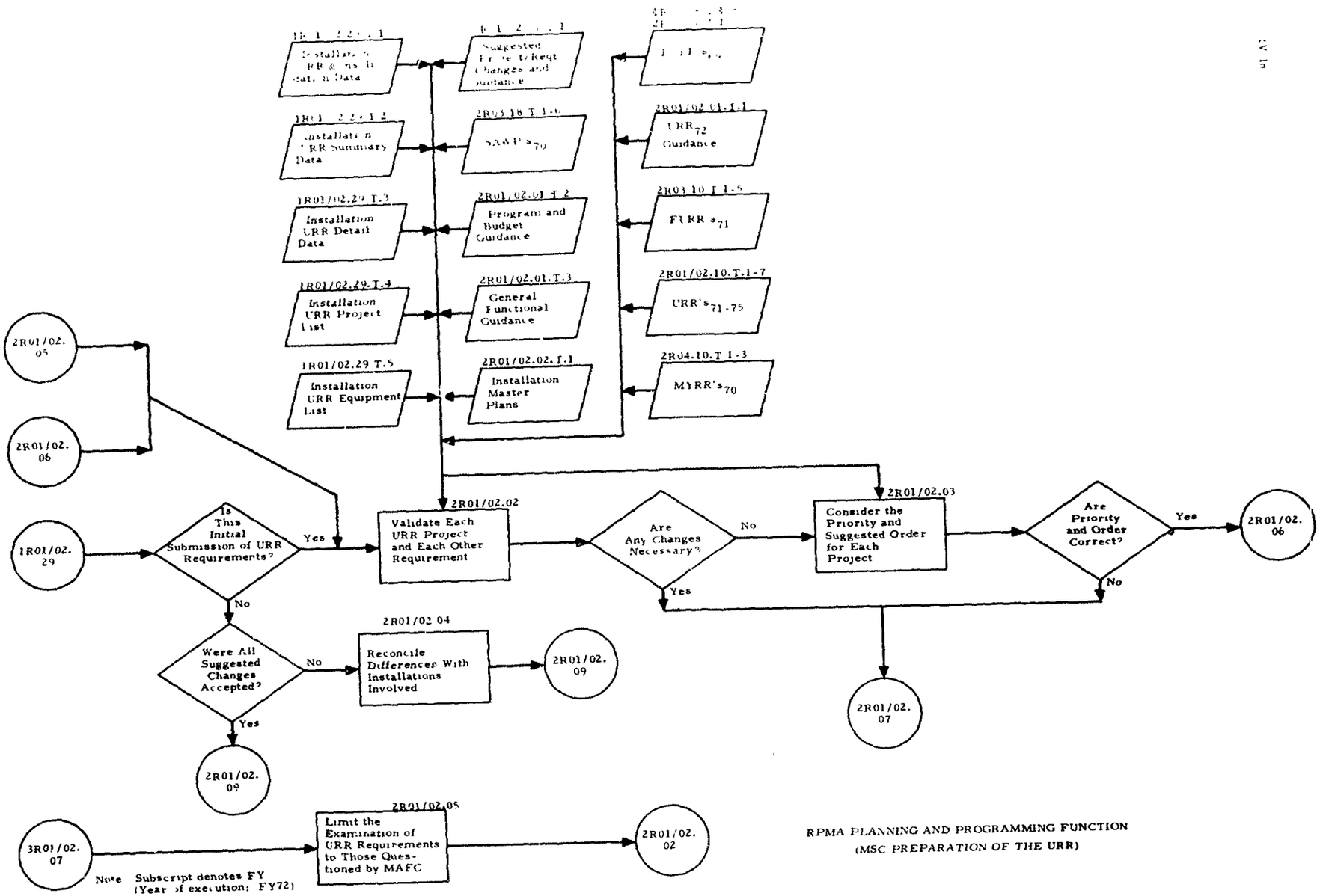

RPMA PLANNING AND PROGRAMMING FUNCTION
(MSC PREPARATION OF THE URR)

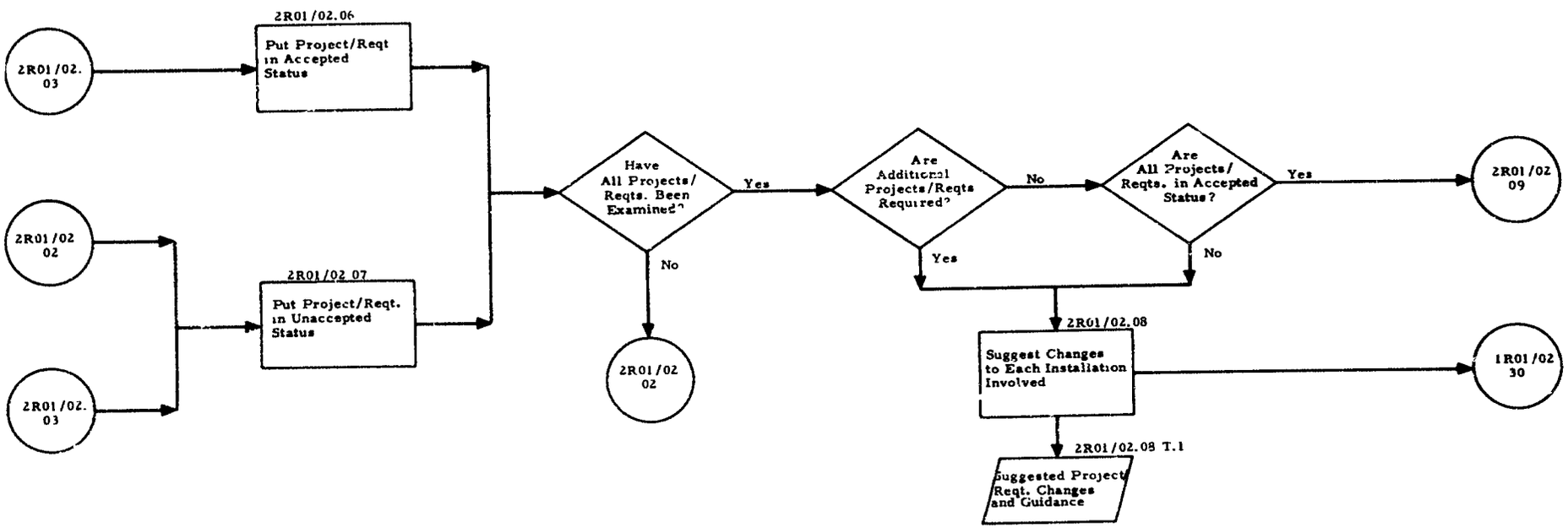

RPMA PLANNING AND PROGRAMMING FUNCTION
(MSC PREPARATION OF THE URR)

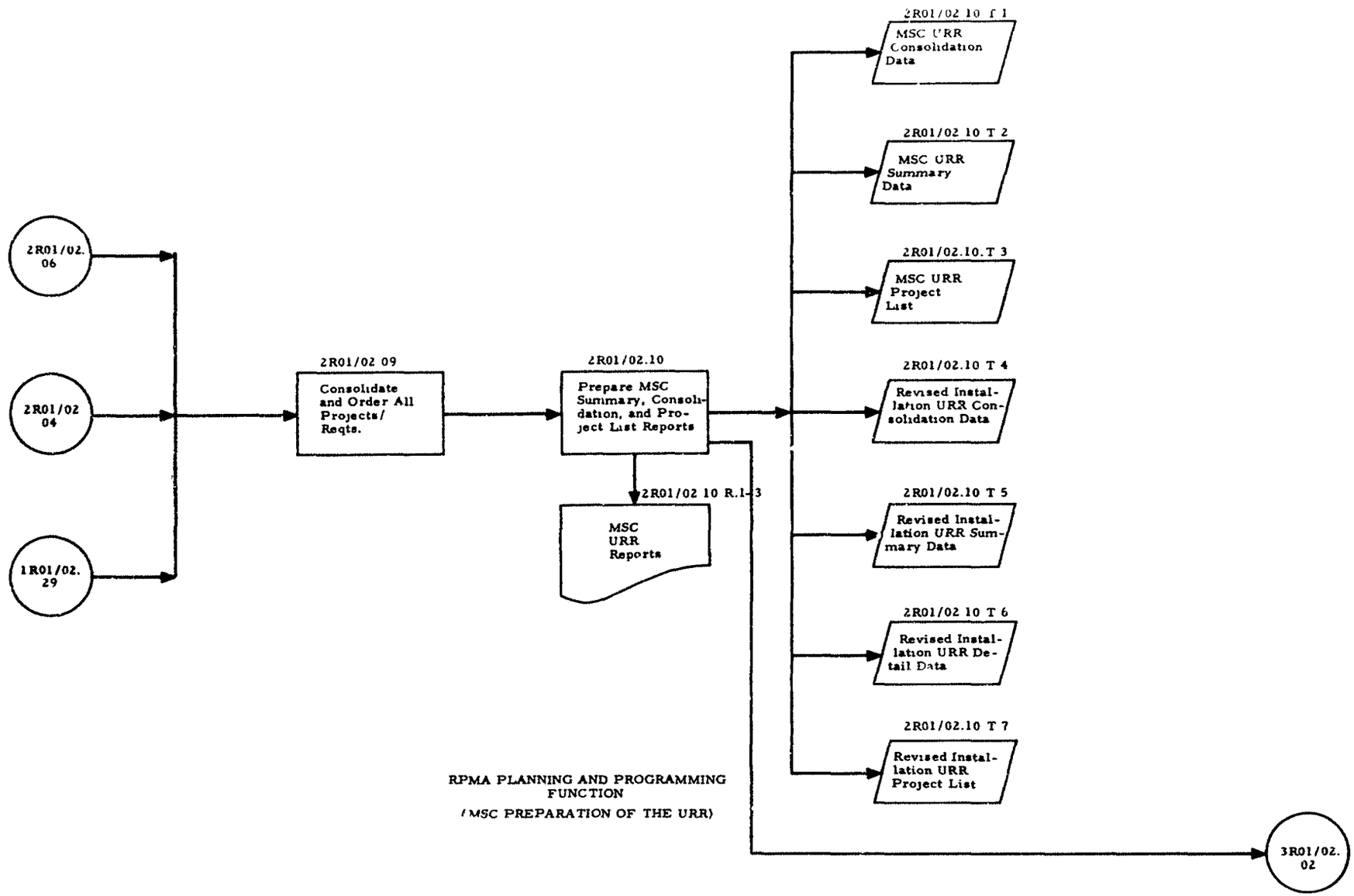

RPMA PLANNING AND PROGRAMMING FUNCTION

(MSC PREPARATION OF THE URR)

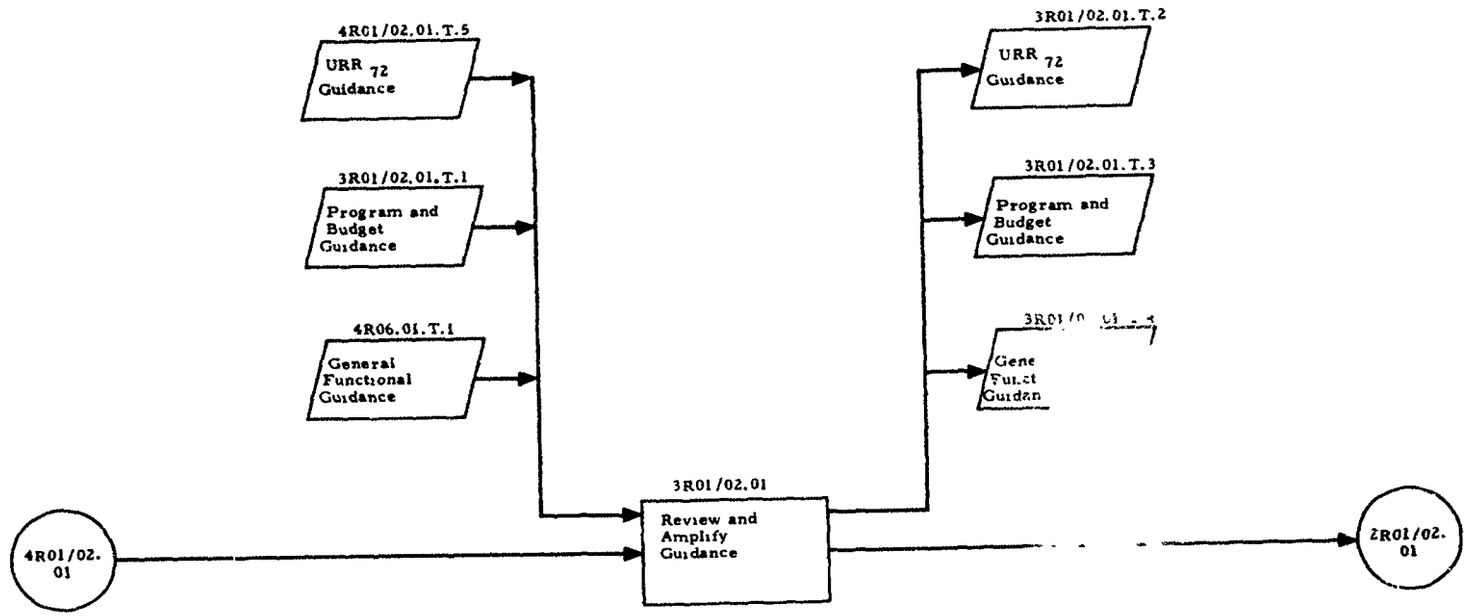

Note: Subscript denotes FY.
(Year of execution: FY72)

RPMA PLANNING AND PROGRAMMING FUNCTION
(MAFC PREPARATION OF THE URR)

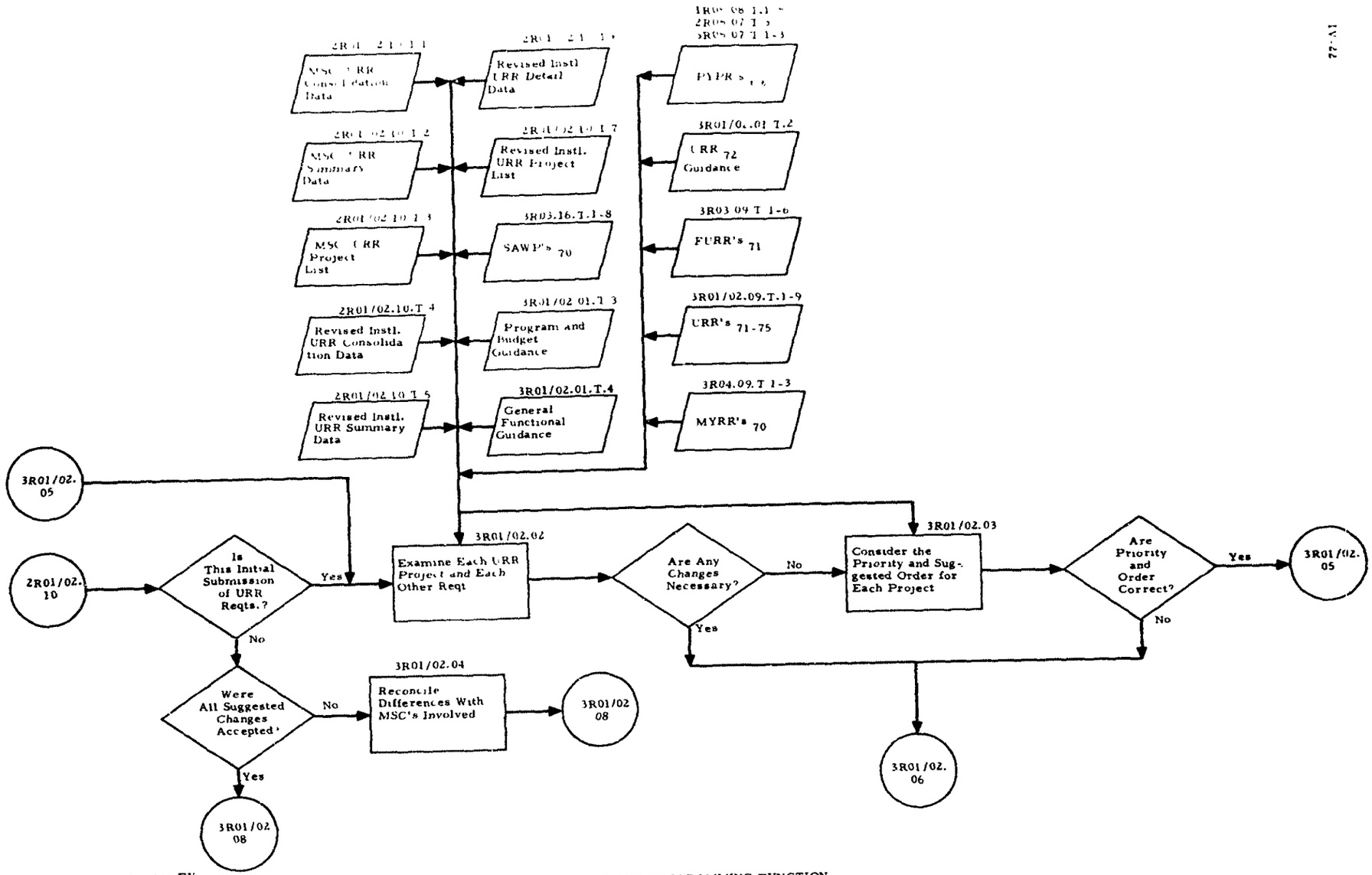

Note: Subscript denotes FY (Year of execution: FY72)

RPMA PLANNING AND PROGRAMMING FUNCTION
(MAFC PREPARATION OF THE URR)

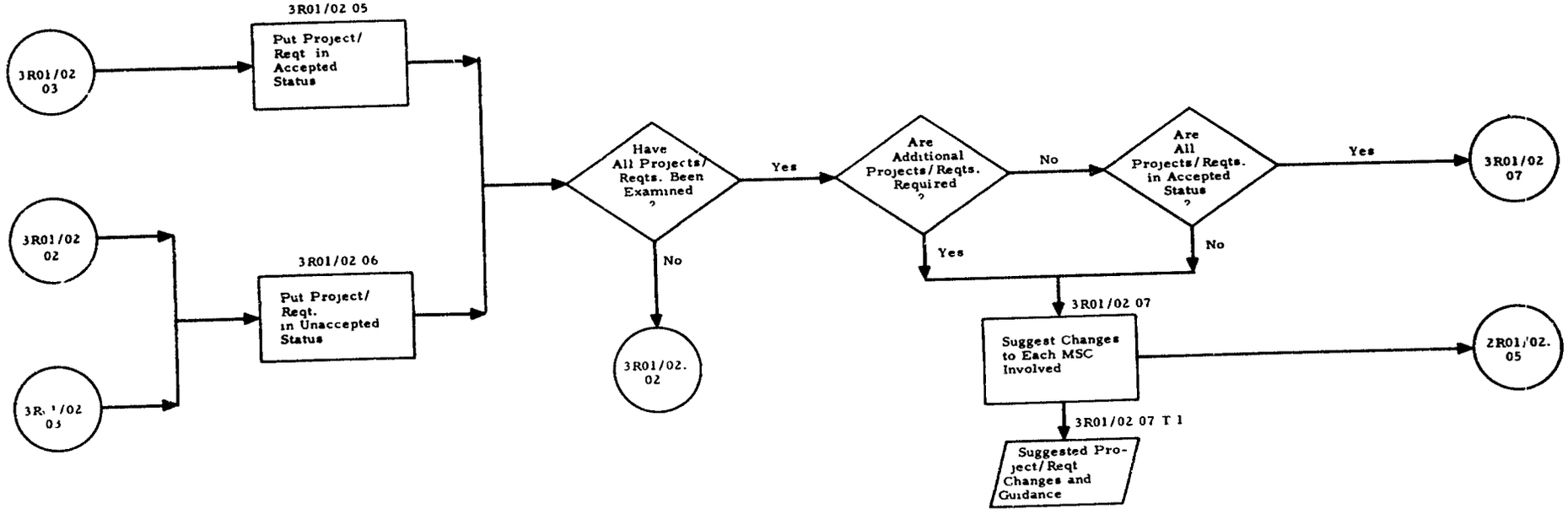

RPMA PLANNING AND PROGRAMMING FUNCTION
(MAFC PREPARATION OF THE URR)

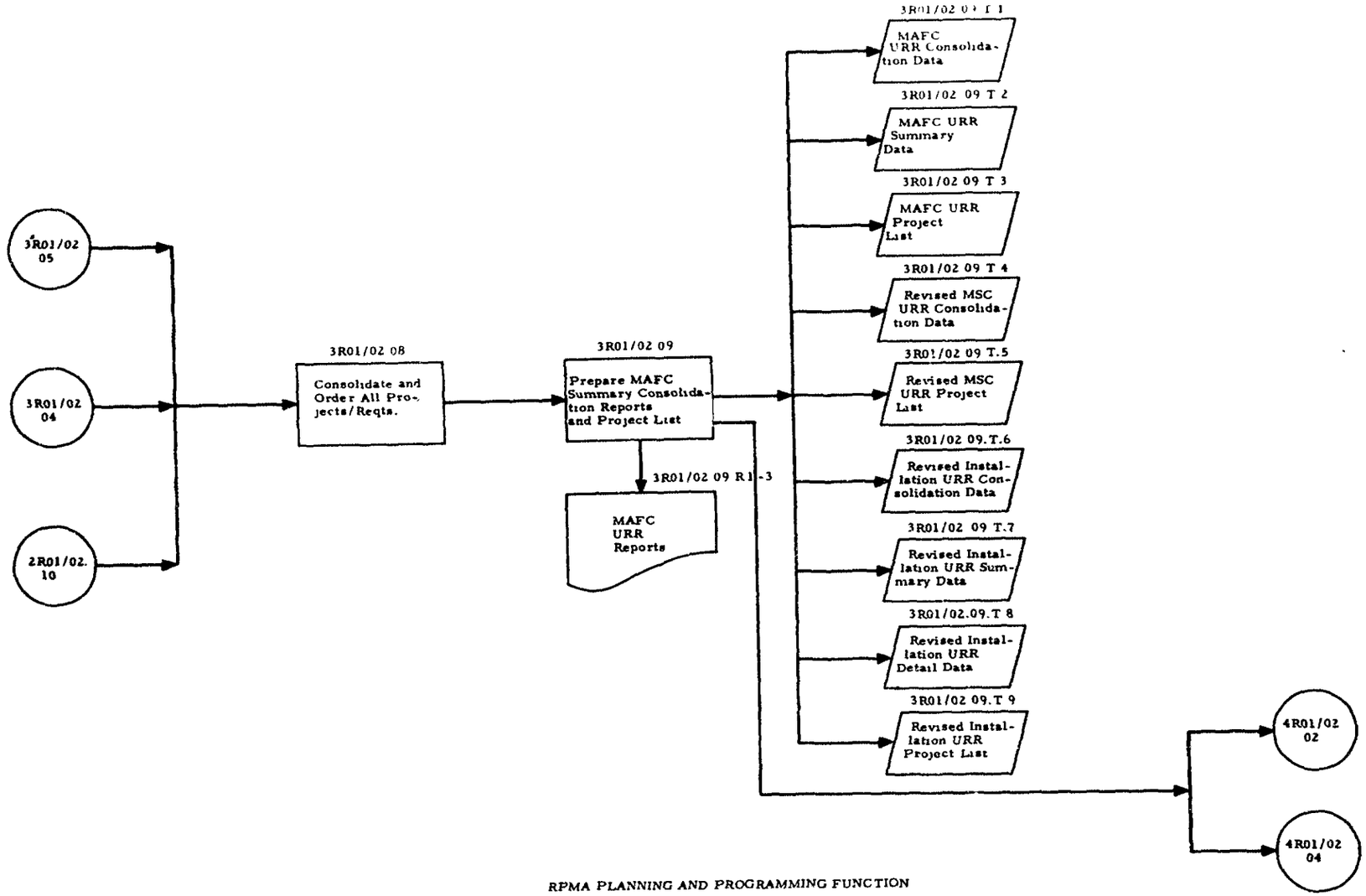

RPMA PLANNING AND PROGRAMMING FUNCTION

(MAFC PREPARATION OF THE URR)

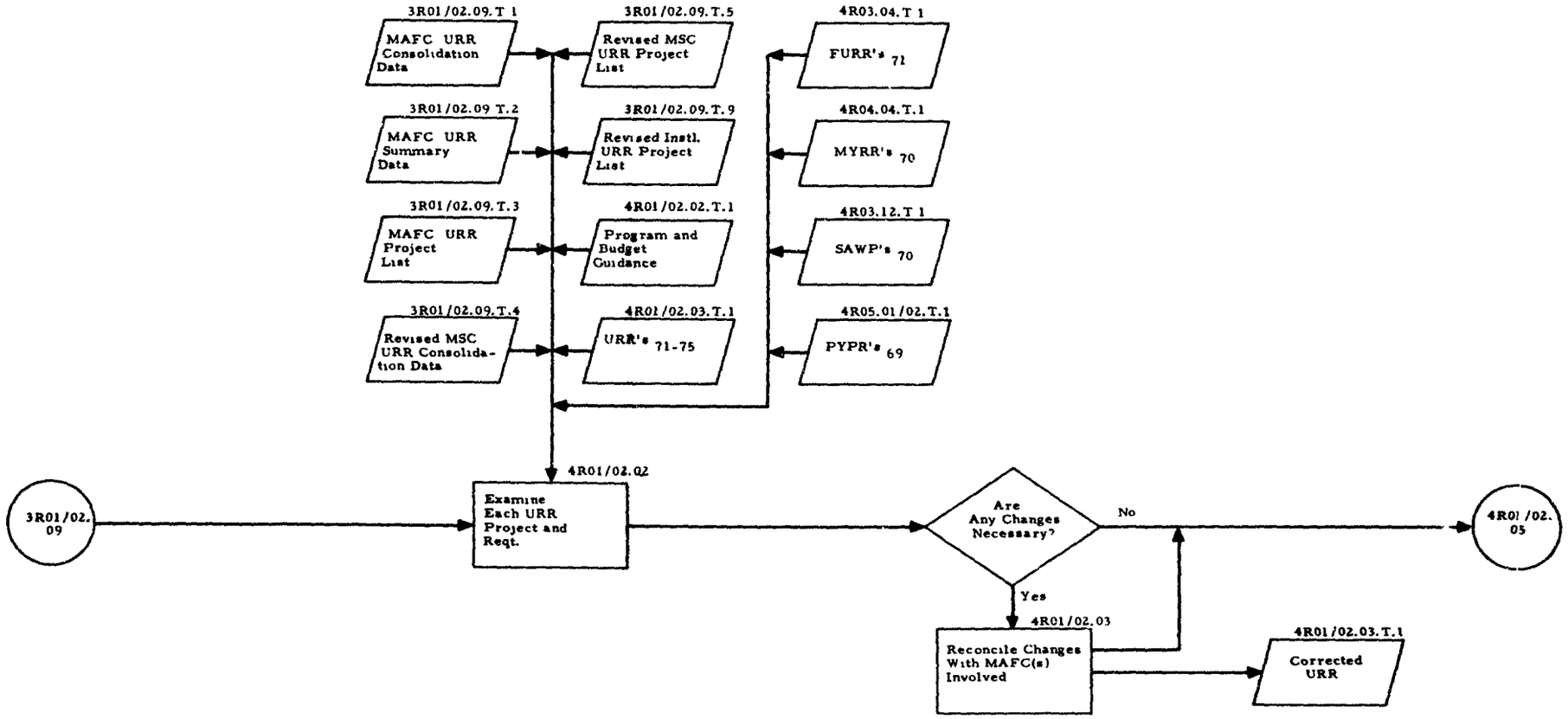

Note: Subscript (e.g., URR $_{71}$) denotes FY
(Year of execution: FY72)

RPMA PLANNING AND PROGRAMMING FUNCTION
(OCE PROCESSING OF THE URR)

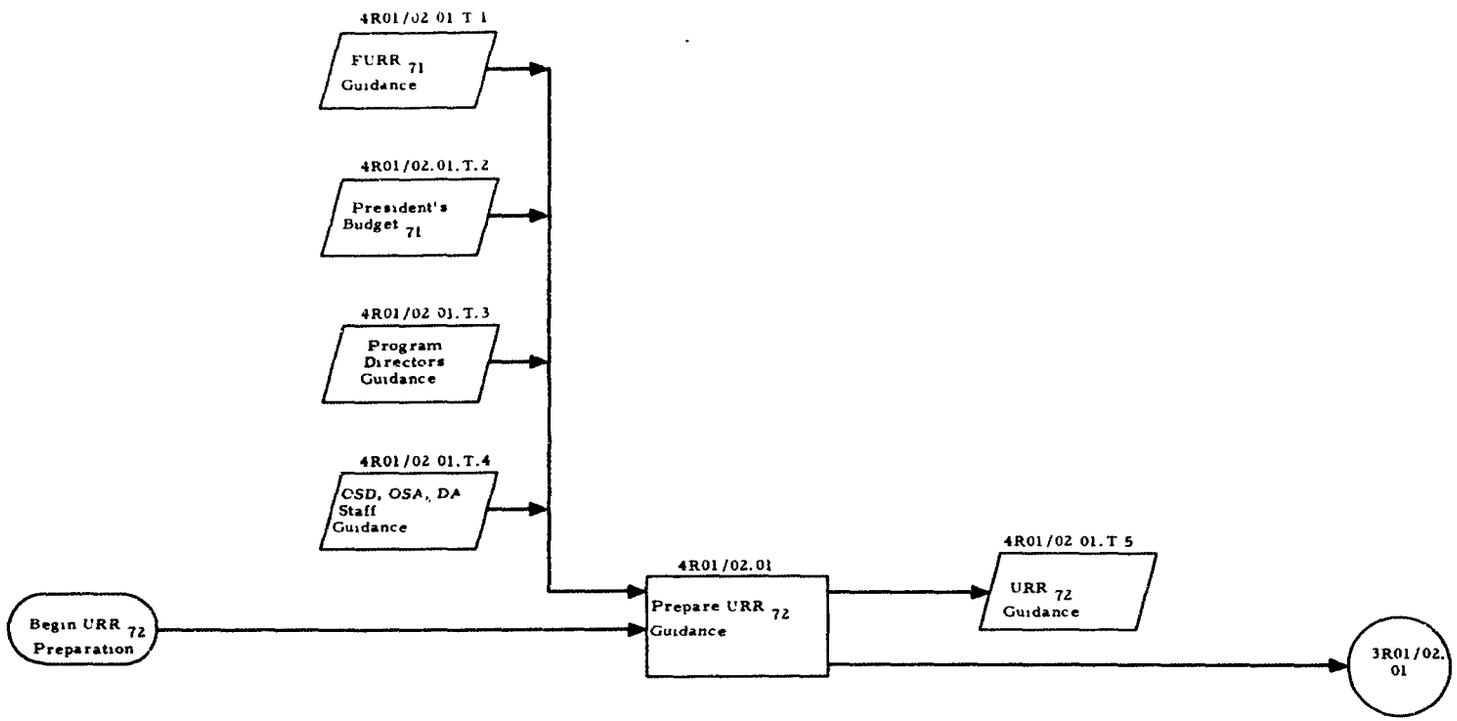

RPMA PLANNING (FY73) AND PROGRAMMING (FY72) FUNCTION
(RPMAO PROCESSING OF THE URR)

Note: Subscript (e.g., URR $_{71}$) denotes FY.
(Year of execution: FY72)

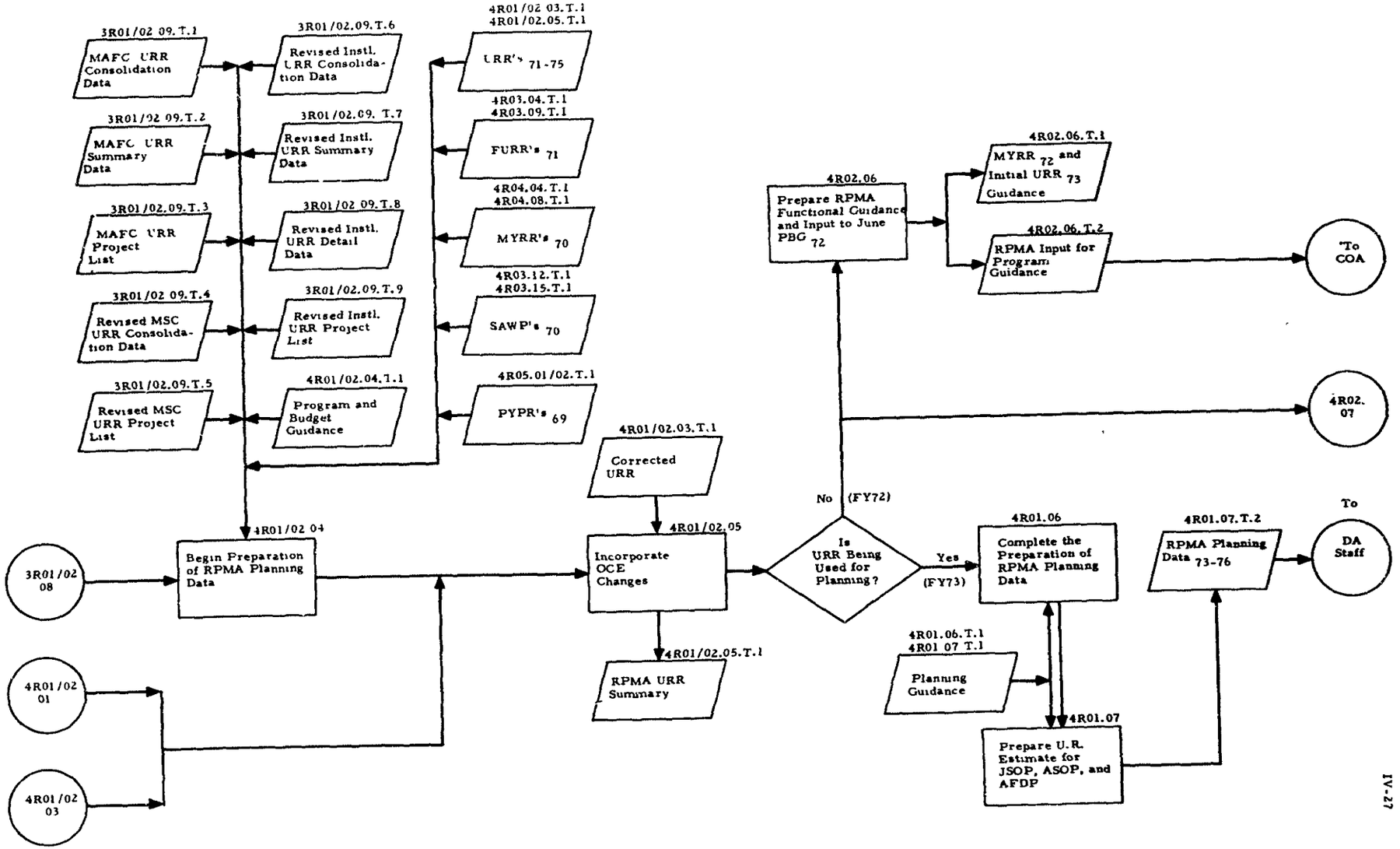

Note Subscript (e g , URR $_{71}$) denotes FY (Year of execution FY72)

RPMA PLANNING (FY73) AND PROGRAMMING (FY72) FUNCTION
(RPMAO PROCESSING OF THE URR)

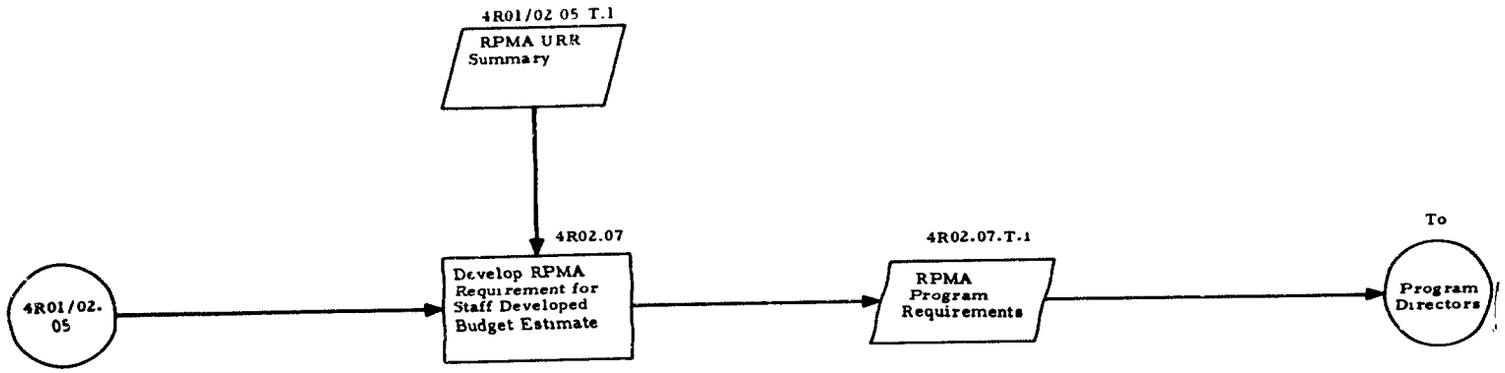

RPMA PROGRAMMING FUNCTION
(DA STAFF USE OF URR DATA)

OPERATION LOGIC

Operation Name:

Compute Utility Requirement

CODE: 1R01/C2.01

The chief of utilities computes utility requirements (water, sewage, electricity, heating, air conditioning, and cold storage). For water, electricity, and heating, he uses targeting methods set forth in TB Eng 259. TB Eng 259 does not provide methods for computing requirements for sewage, air conditioning, or cold storage. Sewage requirements are computed on the basis of estimated water consumption and all operations necessary for the treatment and disposal of sewage. Air conditioning and cold storage requirements are computed on the basis of quantity of air conditioning and cold storage available and the supplies and labor required to operate this equipment. Outputs from computing this requirement are in thousands of gallons for water and sewage, thousands of kilowatt-hours for electricity, millions of BTU's for heating, tons for air conditioning, and horsepower for cold storage.

IFS FILE DESCRIPTION

IFS File Name:

Station Detail File

1R01/02.01
CODE: S 02

General Contents:

Contains detailed data on each facility at an installation. Refer to Exhibit D-2 in PRC Report R-1209, Vol. V, November 1969, for proposed file contents.

Source:

Refer to page IV-31 of report referenced above.

Security Classification:

Confidential **(Refers to file Contents only not this Publication)**

Suggested Frequency of Update:

Approximately twice per month.

INPUT/OUTPUT DATA DESCRIPTION

[x] Input Name	Operating Records	OP CODE	1R01/02.01
[ ] Output Name		FLOW CHART REF	1R01/02.01.T.1

Description:

Operating records are maintained by the post engineer organization for the operation of utilities. These past performance data are a major source of empirical factors for use in computing utility requirements.

Source (if user input) [x] Post engineer operating file

Destination (if output) [ ]

Data Elements Contained

Data Element Name	Reference
Functional category	Glossary
Contract $ cost	
Labor $ cost	
Material and supplies $ cost	
Equipment acquisition $ cost	
Dollars earned	
Unit of measure	
Per capita usage	
Unit cost	

Remarks:

INPUT/OUTPUT DATA DESCRIPTION

[x] Input Name [ ] Output Name	Installation Population Projections	OP CODE	1R01/02.01
		FLOW CHART REF	1R01/02.01.T.2

Description:

Installation population projections are an important factor in computing utility requirements. Projected population and per capita usage provide the framework for developing total utility requirements for water, sewage, electricity, and heating.

Source (if user input) [x] Installation G-1, comptroller

Destination (if output) [ ]

Data Elements Contained

Data Element Name	Reference
Personnel type	

Remarks:

INPUT/OUTPUT DATA DESCRIPTION

[x] Input Name	Standards	OP CODE	1R01/02.01
[ ] Output Name		FLOW CHART REF	1R01/02.01.T.3

Description:

Standards appear in Army publications (listed below) and are used in computing utility requirements to establish uniform procedures and parameters for developing these requirements.

Source (if user input) [ ]

Destination (if output) [ ]

Data Elements Contained

Data Element Name	Reference
Data type	Use TB Eng 259, TM 5-660, TM 5-661, TB Med 229, TB Med 163, AR 210-18, TM 5-665, and TM 5-666 for DUI's

Remarks:

INPUT/OUTPUT DATA DESCRIPTION

☒ Input Name	Station Detail File	OP CODE	1R01/02.01
☐ Output Name		FLOW CHART REF	1R01/02.01.S02

Description:

A working file of station detail data not yet approved as an official data source. Generally more current than the valid files.

Source (if user input) ☐

Destination (if output) ☐

Data Elements Contained

Data Element Name	Reference
	1. Same as 2A01.01.S.I 2. Assets Storage and Retrieval, PRC R-1209, Vol. V, November 1969 3. Section V

Remarks:

INPUT/OUTPUT DATA DESCRIPTION

☒ Input Name ☐ Output Name	Program and Budget Guidance	OP CODE	1R01/02.01
		FLOW CHART REF	2R01/02.01.T.2

Description:

Program and budget guidance contains dollar guidance for preparation of command budgets and for reprogramming activities. It is received from COA through MSC. It addresses any of the data elements listed below.

Source (if user input) ☒ 2R01/02.01

Destination (if output) ☐

Data Elements Contained

Data Element Name	Reference
Functional category	Glossary
Funded cost	
Unfunded cost	
Appropriation	
User/program element/program	
Status of financing	
Financing type	
OMA subappropriation	
FHMA subappropriation	
RDT&E subappropriation	

Remarks:

INPUT/OUTPUT DATA DESCRIPTION

[x] Input Name [ ] Output Name	General Functional Guidance, RPMA	OP CODE	1R01/02.01
		FLOW CHART REF	2R01/02.01.T.3

Description:

This guidance document is prepared annually and issued when the President's budget is sent to Congress. Changes to this document are issued ad hoc during the calendar year. In addition to general RPMA functional guidance, specific guidance is issued periodically addressing management documents in the RPMA design.

Source (if user input) [x] 2R01/02.01

Destination (if output) [ ]

Data Elements Contained

Data Element Name		Reference
Functional category	Status of financing	
Priority class	Fiscal quarter	
Narrative title	Work accomplishment	
Narrative description	Financing type	
Equipment type	Reimbursing agency	
Data type	Performance unit of measure	
Appropriation	Performance standard	
Status		
Personnel type		
Condition rating		
Facility component		
FC^4		
User/program element/program		
Type year		

Remarks:

INPUT/OUTPUT DATA DESCRIPTION

☒ Input Name	URR_{72} Guidance	OP CODE	1R01/02.01
☐ Output Name		FLOW CHART REF	2R01/02.01.T.1

Description:

That portion of a guidance document from higher headquarters that relates to the preparation of the URR. It could address any of those data elements listed below.

Source (if user input) ☒ 2R01/02.01

Destination (if output) ☐

Data Elements Contained

Data Element Name		Reference
Priority class	Labor $ required	Appendix B
Functional category	Material and supplies $ required	
Appropriation	Equipment acquisition $ required	
Condition rating	Total $ required	
Facility component	Dollars earned	
FC^4	Per capita usage	
User/program element/ program	Equipment type	
Work accomplishment	Kind of installation	
Financing type		
OMA subappropriation		
FHMA subappropriation		
RDT&E subappropriation		
Contract $ required		

Remarks:

INPUT/OUTPUT DATA DESCRIPTION

☒ Input Name URR_{71-75}	OP CODE	1R01/02.01
☐ Output Name	FLOW CHART REF	1R01/02.29.T.1-5

Description:

RPMA functional management document for use in planning and programming functions. Unconstrained requirements are identified and collected at installation and submitted--15 months before the year of execution begins--through higher command echelons to HQ DA. At HQ DA it is used in the preparation of RPMA input for planning and programming documents. URR_{71-75} is the document prepared the preceding year.

Source (if user input) ☒

Destination (if output) ☐

Data Elements Contained

Data Element Name		Reference
Priority class	Unit of measure	1. Appendix B
Narrative title	User/program element/program	2. URR report format
Narrative description	Contract $ required	
Functional category	Labor $ required	
Unit cost	Material and supplies $ required	
Equipment type	Equipment acquisition $ required	
Appropriation	Total $ required	
Installation code	Dollars earned	
Command abbreviation	Per capita usage	
Status		
Kind of installation		
Facility number		
Condition rating		
Facility component		

Remarks:

INPUT/OUTPUT DATA DESCRIPTION

☒ Input Name FURR	OP CODE	1R01/02.01
☐ Output Name	FLOW CHART REF	1 R 0 3 . 0 6 . T 1-4

Description:

The FURR is a functional management document for use in the budgeting function. On the basis of funding allocations resulting from the President's budget, unconstrained requirements are reported as financed or unfinanced through higher command echelons to HQ DA. At HQ DA it is used for developing the approved operating budget for RPMA for the budget year and for developing RPMA guidance for the budget year plus one.

Source (if user input) ☐

Destination (if output) ☐

Data Elements Contained

Data Element Name		Reference
Functional category	Unit cost	1. Appendix B
Contract $ required	Equipment type	2. FURR report format
Labor $ required	Unit of measure	
Material and supplies $ required	User/program element/ program	
Equipment acquisition $ required	Command abbreviation	
Total $ required	Appropriation	
Installation code	Status of financing	
Kind of Installation	Dollars earned	
Facility number		
Condition rating		
Status		
Priority class		
Narrative title		
Narrative description		

Remarks:

INPUT/OUTPUT DATA DESCRIPTION

☒ Input Name	$PYPR_{69}$	OP CODE	1R01/02.01
☐ Output Name		FLOW CHART REF	1 R 0 5 0 8 T 1-5

Description:

RPMA functional management document for use in the review function. It contains historical execution information used in the evaluation of performance as well as prior planning and programming estimates.

Source (if user input) ☐

Destination (if output) ☐

Data Elements Contained

Data Element Name		Reference
Unit of measure	Reimbursing agency	
Number of units	Appropriation	
Contract $ cost	FHMA subappropriation	
Labor $ cost	RDT&E subappropriation	
Material and supplies $ cost	OMA subappropriation	
Equipment acquisition $ cost	Fiscal quarter	
Total $ cost	Dollars earned	
Per capita usage	Surface improvement work categories	
Performance unit of measure	Utility work categories	
Performance standard	Facility component	
Actual performance	Percent coverage	
Target performance		
Condition rating		
Financing type		

Remarks:

INPUT/OUTPUT DATA DESCRIPTION

☐ Input Name ☒ Output Name	Total Utility Requirement	OP CODE	1R01/02.01
		FLOW CHART REF	1R01/02.01.T.4

Description:

Total utility requirements developed in accordance with TB Eng 259 and other applicable publications. The station detail file (see 1R01/02.01.S02) provides data on building design capacities and other data needed in computing utility requirements.

Source (if user input) ☐

Destination (if output) ☒

1R01/02.02
1R01/02.04
1R01/02.07

Data Elements Contained

Data Element Name	Reference
Functional category Per capita usage Unit of measure Data type Personnel type	1. Appendix B 2. URR format

Remarks:

OPERATION LOGIC

Operation Name: Compare the Utility Requirements to Installation Capacity

CODE: 1R01/02.02

After being computed, an installation's utility requirements for the budget year addressed in the URR must be compared with its capacity to provide them. For example, little capacity for producing electricity exists, so electricity must be purchased. Other utility requirements, particularly water and sewage, may be satisfied with a combination of purchase and installation production.

Inputs Described Elsewhere

1R01/02.01.T.4	Total utility requirement
1R01/02.02.S02	Station detail file (see 1R01/02.01.S02)

OPERATION LOGIC

Operation Name:

Compute Amount to be Purchased

CODE: 1R01/02.03

The amount of utility services to be purchased--primarily water, sewage, and electricity--is computed by the chief of utilities. Purchase of these utilities is based on answers to either or both of two questions: Can utility service be purchased more economically than it can be produced at the installation? How much must be purchased? Purchase of utilities is negotiated to obtain the best price/rate for the Government. Unit costs are measured in thousands of gallons of water, thousands of gallons of sewage disposal, and thousands of kilowatt-hours of electricity.

Inputs Described Elsewhere

1R01/02.03.S02 Station detail file (see 1R01/02.01.S02)

INPUT/OUTPUT DATA DESCRIPTION

☐ Input Name ☒ Output Name	Amount of Purchased Utilities	OP CODE	1R01.02.03
		FLOW CHART REF	1R01.02.03T1

Description:

See 1R01/02.01.S02. This output is developed by comparing installation capacity as provided by the station detail file with the total utility requirement (1R01/02.01.T.4). Differences between capacity and requirement provide the basis for purchase of utilities.

Source (if user input) ☐

Destination (if output) ☒ 1R01/02.04
1R01/02.07

Data Elements Contained

Data Element Name	Reference
Same as 1R01/02.01.T.4, page IV- 41.	

Remarks:

OPERATION LOGIC

Operation Name:

Estimate Costs

CODE: 1R01/02.04

Total costs for utilities are computed by the work coordinating center. Utility costs are a combination of costs for labor (man-hours), material and supplies, equipment purchase or rental contract services, and purchased utility services.

Outputs are (1) total required quantities of each utility, and (2) total cost of each utility, measured in thousands of gallons of water, thousands of gallons of sewage disposal, and thousands of kilowatt-hours of electricity.

Inputs Described Elsewhere

1R05.08.T.1-5	$PYPR_{69}$
1R01/02.04.T.3	Standards (see 1R01/02.01.T.1)
1R01/02.01.T.4	Total utility requirement
1R01/02.03.T.1	Amount of purchased utility

INPUT/OUTPUT DATA DESCRIPTION

[x] Input Name	Work Management Data	OP CODE	1 R 0 1 0 2 . 0 4
[ ] Output Name		FLOW CHART REF	1 R 0 1 . 0 2 . 0 4 T 1

Description:

Work management data comprise all elements and items gathered by the post engineer and required for effective installation management. RPMA requires only a subset of the entire work management data. The work management data elements required during the planning and programming process are listed below. Refer to the URR to determine the context within which these elements are used.

Source (if user input) [x] Work management system

Destination (if output) [ ]

Data Elements Contained

Data Element Name	Reference
Building component	Section V
Condition rating	
Contract $ required	
Data class	
Dollars earned	
Equipment acquisition $ required	
Equipment type	
Facility component	
Functional category	
Labor $ required	
Material and supplies $ required	
Narrative title	
Number of units	
Per capita usage	

Remarks:

INPUT/OUTPUT DATA DESCRIPTION (Continued)

☒ Input Name ☐ Output Name	Work Management Data	OP CODE	1 R 0 1 . 0 2 . 04
		FLOW CHART REF	1 R 0 1 . 0 2 . 0 4 T . 1

Data Elements Contained

Data Element Name	Description or Reference
Priority class Status Target performance Total $ required Type of work Unit cost Unit of measure User/program element/program Utility work categories	

INPUT/OUTPUT DATA DESCRIPTION

☒ Input Name ☐ Output Name	Purchase and Operating Costs	OP CODE	1R01/02.04
		FLOW CHART REF	1R01/02.04.T.2

Description:

Costs are estimated using available empirical data (PYPR), current operating costs, and projected costs.

Source (if user input) ☐

Destination (if output) ☐

Data Elements Contained

Data Element Name	Reference
Functional category	
Contract $ required	
Labor $ required	
Material and supplies $ required	
Equipment acquisition $ required	
Total $ required	
Unit cost	

Remarks:

INPUT/OUTPUT DATA DESCRIPTION

☐ Input Name		OP CODE	1R01/02.04
☒ Output Name	Estimated Utility Costs	FLOW CHART REF	1R01/02.04.T.4

Description:

Utility costs are estimated using costs for labor, materials and supplies, equipment, contract services, and purchased utility services to compute the estimated costs of utilities based on total utility requirement.

Source (if user input) ☐

Destination (if output) ☒ 1R01/02.07

Data Elements Contained

Data Element Name	Reference
Functional category	
Contract $ cost	
Labor $ cost	
Material and supplies $ cost	
Equipment acquisition $ cost	
Unit cost	
Unit of measure	
Total $ cost	

Remarks:

OPERATION LOGIC

Operation Name:

Estimate Sales of Utilities

CODE: 1R01/02.05

Sales of utilities are estimated by the work coordinating center. Empirical data contained in prior year records, current year sales, and anticipated additional sales for the budget year form the basis for estimating sales of utilities. Sales are included as reimbursable utility costs. Outputs are in units of measure listed in 1R01/02.04, with an estimated dollar total for each major category of utility (e.g., water, sewage).

Inputs Described Elsewhere

1R05.08.T.1-5 $PYPR_{69}$

INPUT/OUTPUT DATA DESCRIPTION

☐ Input Name ☒ Output Name	Reimbursed Utility Costs	OP CODE	1R01/02.05
		FLOW CHART REF	1R01/02.05.T.1

Description:

Estimates for sales of utilities are based on known requirements to provide utility service and empirical data providing planning factors based on previous sales.

Source (if user input) ☐

Destination (if output) ☒ 1R01/02.07

Data Elements Contained

Data Element Name	Reference
Functional category	
Dollars earned	
Unit cost	
User/program element/program	
Contract $ cost	
Labor $ cost	
Material and supplies $ cost	
Equipment acquisition $ cost	
Total $ cost	
Unit of measure	
Reimbursing agency	

Remarks:

OPERATION LOGIC

Operation Name:

Estimate Refuse Handling Costs

CODE: 1R01/02.06

The work coordinating center computes costs for in-house refuse handling by combining the costs of relevant labor and equipment. Labor costs should be in man-hours. Equipment costs should include maintenance factors. Where applicable, costs should be identified as either disposal or collection costs.

When refuse handling is purchased, procedures described in 1R01/02.03 apply.

Inputs Described Elsewhere

1R01/02.06.T.1	Work management data (see 1R01/02.04.T.1)
1R05.08.T.1-5	$PYPR_{69}$

INPUT/OUTPUT DATA DESCRIPTION

☒ Input Name ☐ Output Name	Refuse Handling Requirements	OP CODE	1R01/02.06
		FLOW CHART REF	1R01/02.20.T.4

Description:

Refuse handling requirements as identified by the refuse collection and disposal section of the post engineer organization in 1R01/02.20.T.4.

Source (if user input) ☒ 1R01/02.20

Destination (if output) ☐

Data Elements Contained

Data Element Name	Reference
Equipment type Personnel type	

Remarks:

INPUT/OUTPUT DATA DESCRIPTION

☒ Input Name ☐ Output Name	Purchase and Operating Costs	OP CODE	1R01/02.06
		FLOW CHART REF	1R01/02.06.T.2

Description:

Current purchase cost for equipment and services and current operating costs for refuse handling services.

Source (if user input) ☐

Destination (if output) ☐

Data Elements Contained

Data Element Name	Reference
Functional category	
Contract $ cost	
Labor $ cost	
Material and supplies $ cost	
Equipment acquisition $ cost	
Total $ cost	
Equipment type	
Work accomplishment	

Remarks:

INPUT/OUTPUT DATA DESCRIPTION

☒ Input Name	Standards	OP CODE	1R01/02.06
☐ Output Name		FLOW CHART REF	1R01/02.06.T.3

Description:

See 1R01/02.01.T.3, particularly for standards that apply to refuse handling.

Source (if user input) ☒ TM 5-634

Destination (if output) ☐

Data Elements Contained

Data Element Name	Reference
Data type	TM 5-634

Remarks:

INPUT/OUTPUT DATA DESCRIPTION

☐ Input Name ☒ Output Name	Estimated Refuse Handling Costs	OP CODE	1R01/02.06
		FLOW CHART REF	1R01/02.06.T.4

Description:

Cost estimate of refuse handling requirements, broken into labor, materials and supplies, equipment acquisition, and contracts.

Source (if user input) ☐

Destination (if output) ☒ 1R01/02.07

Data Elements Contained

Data Element Name	Reference
Functional category	
Contract $ required	
Labor $ required	
Material and supplies $ required	
Equipment acquisition $ required	
Unit of measure	
Total $ cost	
Number of units	

Remarks:

OPERATION LOGIC

Operation Name:
Review and Modify Utility and Refuse Handling Requirements

CODE: 1R01/02.07

The work coordinating center reviews utility and refuse handling requirements to insure that all guidance from higher headquarters has been incorporated in computing these requirements and establishing priorities.

Inputs Described Elsewhere

2R01/02.01.T.2	Program and budget guidance
2R01/02.01.T.3	General functional guidance
2R01/02.01.T.1	URR72 guidance
1R01/02.29.T.1-5	URR71-75
1R03.06.T.1-4	FURR71
1R05.08.T.1-5	PYPR69
1R01/02.06.T.4	Estimated refuse handling costs
1R01/02.04.T.4	Estimated utility costs
1R01/02.01.T.4	Total utility requirement
1R01/02.03.T.1	Amount of purchased utility
1R01/02.20.T.4	Refuse handling requirement
1R01/02.05.T.1	Reimbursed utility costs

INPUT/OUTPUT DATA DESCRIPTION

☐ Input Name	Utilities URR	OP CODE	1R01/02.07
☒ Output Name	Requirements	FLOW CHART REF	1R01/02.07.T.1

Description:

A combination of total utility requirements and refuse handling requirements.

Source (if user input) ☐

Destination (if output) ☒ 1R01/02.23

Data Elements Contained

Data Element Name	Reference
Priority class	
Narrative title	
Narrative description	
Functional category	
Unit cost	
Equipment type	
Unit of measure	
Contract $ required	
Labor $ required	
Material and supplies $ required	
Equipment acquisition $ required	
Total $ required	
Dollars earned	
Per capita usage	

Remarks:

OPERATION LOGIC

Operation Name:

Inspect Facilities

CODE: 1R01/02.08

A team of inspectors identifies work requirements for the fiscal years that start 15 months following submission of the URR. For each requirement, the following data are given: facility number (which can be related to program element or user and to groups of similar facilities), building component, type of work (whether IJO, contract, or, less likely, SO or SOO), priority class, condition rating of the facility, description of the work, fiscal year in which work is to be done, estimate of labor man-hours, materials and supplies required, standards reference, and remarks. The collection form used by the inspectors is similar to that shown in Exhibit III-4 of PRC Report R-1209, Volume II, Part 2.

For the Buildings and Structures Branch, requirements are identified by inspecting each facility, or group of similar facilities, after discussions with the facility user and post engineer shop personnel familiar with the facility or group.

For the Roads and Railroad Branch and the Land Management Branch, the team of inspectors collects and identifies requirements primarily by discussions with the post engineer shop personnel who are most familiar with the facilities and with the facilities' users, and by brief inspections of the facilities.

For the Utilities Division, the team of inspectors collects and identifies requirements primarily through discussions with plant operators and post engineer shop personnel most familiar with the facilities and by brief inspections of the facilities.

The inspectors deliver their lists of requirements to the work coordinating center, which turns the lists of requirements over to the Buildings, Grounds, Utilities, and Supply and Storage division chiefs for examination, modification, ordering of projects, and approval.

In the automated system, the inspectors' collection forms are entered into the data base so that requirements will be available by user/program element/program, group of similar facilities, facility component, priority class, and condition rating.

IFS FILE DESCRIPTION

IFS File Name:

RPMA Facility Groups and Components File

1R01/02.08
CODE: S 60

General Contents:

Groups of similar facility categories (by FC4).
List of RPMA facility components.

Source:

OCE/RPMAO

Security Classification:

Unclassified

Suggested Frequency of Update:

As required--approximately annually.

INPUT/OUTPUT DATA DESCRIPTION

[x] Input Name	$MYRR_{70}$	OP CODE	1R01/02.08
[ ] Output Name		FLOW CHART REF	1 R 0 4 0 7 T 1-5

Description:

The MYRR is generated immediately after the first quarter. It documents the first quarter's activities, accomplishments, and expenditures. As a result of better insight, unexpected expenses, or reevaluation of mission objectives, the MYRR also contains reprogramming data, which is useful to determine impact or funding insufficiencies.

Source (if user input) [ ]

Destination (if output) [ ]

Data Elements Contained

Data Element Name		Reference
Contract $ cost	Unit of measure	1. Appendix B
Labor $ cost	User/program element/ program	2. MYRR report format
Material and supplies $ cost	Status of financing	
Equipment acquisition $ cost	Work accomplishment	
Percent coverage	Review period	
Contract $ required	Data class	
Labor $ required	Financing type	
Material and supplies $ required	Reimbursing agency	
Equipment acquisition $ required	Performance unit of measure	
Total $ required	Actual performance	
Functional category	Number of units	
Appropriation	Dollars earned	
Status		
Condition rating		

Remarks:

INPUT/OUTPUT DATA DESCRIPTION

☒ Input Name ☐ Output Name	General Functional Guidance	OP CODE	1R01/02.08
		FLOW CHART REF	2R01/02.01.T.3

Description:

See 2R01/02.01.T.3; give particular attention to those portions dealing with functional category 10, maintenance of real property.

Source (if user input) ☐

Destination (if output) ☐

Data Elements Contained

Data Element Name	Reference
Same as 2R01/02.01.T.3	

Remarks:

INPUT/OUTPUT DATA DESCRIPTION

☒ Input Name AWP_{70}	OP CODE	1R01/02.05
☐ Output Name	FLOW CHART REF	1R0308.T 2

Description:

Plan of execution for the post engineer organization. Is used by the teams of inspectors to identify work scheduled to be done during the coming fiscal year.

Source (if user input) ☐

Destination (if output) ☐

Data Elements Contained

Data Element Name		Reference
Priority class	Unit of measure	Appendix B
Object class	User/program element/program	
Elements of expense	Contract $ required	
Narrative title	Labor $ required	
Narrative description	Material and supplies $ required	
Functional category	Equipment acquisition $ required	
Type supply	Total $ required	
Unit cost	Type year	
Equipment type	Status of financing	
Funded cost	Work accomplishment	
Unfunded cost	Financing type	
Appropriation	Reimbursing agency	
Installation code	Equipment rental cost	
Command abbreviation	Numbers of units	
Status	Dollars earned	
Kind of installation	Per capita usage	
Craft		
Personnel type		
Facility number		
Facility component		

INPUT/OUTPUT DATA DESCRIPTION

☒ Input Name ☐ Output Name	Work Requests Initiated by Facility User	OP CODE	1 R 0 1 . 0 2 . 0 8
		FLOW CHART REF	1 R 0 1 . 0 2 . 0 8 T . 1

Description:

The teams of inspectors consider work requests made by facility users when the teams identify and collect unconstrained requirements.

Source (if user input) ☐

Destination (if output) ☐

Data Elements Contained

Data Element Name	Reference
Narrative title Narrative description Appropriation Status of facility Facility number Facility component User/program element/program Financing type Reimbursing agency	

Remarks:

INPUT/OUTPUT DATA DESCRIPTION

☒ Input Name	Inspection Standards	OP CODE	1R01/02.08
☐ Output Name		FLOW CHART REF	1R01/02.08.T.2

Description:

Policies, directives, practices, procedures, and guidance contained in AR's, DA technical bulletins, and DA technical manuals used by the inspectors in determining unconstrained requirements. Examples: AR 210-17, AR 420 series, DA Pam 420-5, DA Technical Manual 5-600 series.

Source (if user input) ☐

Destination (if output) ☐

Data Elements Contained

Data Element Name	Reference
Functional category	
Type supply	
Equipment type	
Data type	
Status of facility	
Craft	
Personnel type	
Facility component	
Unit of measure	
Work accomplishment	
Financing type	
Target performance	
Equipment rental cost	

Remarks:

INPUT/OUTPUT DATA DESCRIPTION

☒ Input Name ☐ Output Name	RPMA Facility Groups and Components	OP CODE	1R01/02.08
		FLOW CHART REF	1R01/02.08.S60

Description:

The teams of inspectors identify work requirements, in part, by facility components for use by shop personnel in preparing the AWP and the SAWP, and for eventual inclusion in the UFR once the system is automated. This input file also contains groups of similar facilities for each facility number at an installation and for each FC[4].

Source (if user input) ☐

Destination (if output) ☐

Data Elements Contained

Data Element Name	Reference
Facility component Facility number	Appendix B

Remarks:

OPERATION LOGIC

Operation Name:

Indicate Any Changes in Facility Condition

CODE: 1R01/02.09

Property clerk corrects the assets data base to reflect changes in facility condition as discussed in PRC Report R-1209, Volume VI, Part 2.

Outputs Described Elsewhere

1R01/02.09.S02 Station detail file (see 1R01/02.01.S02)

INPUT/OUTPUT DATA DESCRIPTION

☐ Input Name		OP CODE	1 R 0 1 . 0 2 .0 9
☒ Output Name	Real Property Facilities Project	FLOW CHART REF	1 R 0 1 . 0 2 . 0 9 T 1

Description:

The teams of inspectors collect and identify new real property facilities projects to be accomplished in the fiscal years that start 15 months after submission of the URR. These requirements are other than routine in-house maintenance and repair.

Source (if user input) ☐

Destination (if output) ☒ 1R01/02.10

Data Elements Contained

Data Element Name	Reference
Priority class Narrative title Narrative description Functional category Type supply Equipment type Installation code Status Facility number Condition rating Facility component Unit of measure Number of units	Appendix B

Remarks:

INPUT/OUTPUT DATA DESCRIPTION

☐ Input Name		OP CODE	1R01/02.09
☒ Output Name	Station Detail File	FLOW CHART REF	1R01/02.09.S02

Description:

An assets file containing condition rating by facility number and other station detail data.

Source (if user input) ☐

Destination (if output) ☐

Data Elements Contained

Data Element Name	Reference
Facility number Condition rating	Appendix B

Remarks:

OPERATION LOGIC

Operation Name:

Project Additional Requirements

CODE: 1R01/02.10

Based on historical data on service orders and standing operating orders, section chiefs project maintenance and repair requirements that the team of inspectors could not identify. These additional requirements are broken out by program element or user, by the five major groups of similar facilities (buildings, surface improvements, grounds, utilities, and inactive), by existing condition of the facilities, and by priority. The additional requirements are reviewed, modified, and approved by branch chiefs and the operating division chiefs before being sent to the work coordinating center.

Once an automated system is introduced, the additional requirements are projected from historical data and made available by the detailed groups of similar facilities and by facility components, in addition to those parameters listed above.

Inputs Described Elsewhere

1R01/02.09.T.1	New work requirements
2R01/02.01.T.2	Program and budget guidance
2R01/02.01.T.3	General [illegible]ctional guidance
2R01/02.01.T.1	URR72 [illegible]ce
1R01/02.29.T.1-5	URR71-72
1R03.06.T.1-4	FURR71
1R05.08.T.1-5	PYPR69

INPUT/OUTPUT DATA DESCRIPTION

☒ Input Name	Work Management Data	OP CODE	1R01/02.10
☐ Output Name		FLOW CHART REF	1R01/02.10.T.1

Description:

Historical data on standing operating orders and service orders available to section chiefs for use in projecting additional requirements.

Source (if user input) ☐

Destination (if output) ☐

Data Elements Contained

Data Element Name	Reference
Functional category	
Priority class	
User/program element/program	
Facility component	
Craft	
Facility number	
Total $ cost	

Remarks:

INPUT/OUTPUT DATA DESCRIPTION

☐ Input Name ☒ Output Name	Existing and Projected Requirements	OP CODE	1R01/02.10
		FLOW CHART REF	1R01/02.10.T.2

Description:

All requirements identified and collected by the teams of inspectors and those projected by section chiefs.

Source (if user input) ☐

Destination (if output) ☒ 1R01/02.11

Data Elements Contained

Data Element Name	Reference
Same as 1R01/02.10.T.1	

Remarks:

OPERATION LOGIC

Operation Name:

Estimate Costs

CODE: 1R01/02.11

Estimators in the work coordinating center estimate costs of the work requirements. Costs are broken into labor man-hours and dollars, materials and supplies, equipment purchases, and contracts. Estimates are based on previous unit costs, usage schedules, standards, and various catalog costs.

Inputs Described Elsewhere

1R01/02 10.T.2	Existing and projected requirements
1R05.08.T.1-5	PYPR69

INPUT/OUTPUT DATA DESCRIPTION

[x] Input Name [ ] Output Name	Custodial, Entomological, and Snow Removal Requirements	OP CODE	1R01/02.11
		FLOW CHART REF	1R01/02.21.T.4

Description:

Requirements for custodial, entomological, and snow removal services as determined in 1R01/02.21.

Source (if user input) [x] 1R01/02.21

Destination (if output) [ ]

Data Elements Contained

Data Element Name	Reference
Equipment type Type supply Personnel type Unit of measure Number of units Functional category	

Remarks:

INPUT/OUTPUT DATA DESCRIPTION

☒ Input Name Work Management Data	OP CODE	1 R 0 1 . 0 2 . 1 1
☐ Output Name	FLOW CHART REF	1 R 0 1 0 2 1 1 T 1

Description:

Historical cost data relating to labor, materials, supplies, equipment, and contracts.

Source (if user input) ☒ Work Management System

Destination (if output) ☐

Data Elements Contained

Data Element Name	Description or Reference
Same as IR 01/02.4.T.1.	

Remarks:

INPUT/OUTPUT DATA DESCRIPTION

☒ Input Name ☐ Output Name	Equipment Purchase Costs	OP CODE	1R01/02.11
		FLOW CHART REF	1R01/02.11.T.2

Description:

Catalogs and other cost data on equipment.

Source (if user input) ☐

Destination (if output) ☐

Data Elements Contained

Data Element Name	Reference
Equipment type Unit cost Equipment acquisition $ cost Number of units Unit of measure	

Remarks:

INPUT/OUTPUT DATA DESCRIPTION

☒ Input Name ☐ Output Name	Minor Construction Projects	OP CODE	1R01/02.11
		FLOW CHART REF	1R01/02.17.T.1

Description:

List of minor construction projects to be completed in fiscal years covered by URR.

Source (if user input) ☒ 1R01/02.17.T.1

Destination (if output) ☐

Data Elements Contained

Data Element Name	Reference
Priority class	
Narrative title	
Narrative description	
Functional category	
Unit of measure	
Number of units	
Type of work	
Facility number	
Facility component	

Remarks:

INPUT/OUTPUT DATA DESCRIPTION

☒ Input Name	Standards	OP CODE	1R01/02.11
☐ Output Name		FLOW CHART REF	1R01/02.11.T.3

Description:

Contains policies, directives, practices, procedures, and guidance contained in AR's, DA technical bulletins, and DA technical manuals used by the work coordinating center estimators in determining unconstrained requirements costs. An example is DA pamphlet 420-5 for estimating labor man-hours.

Source (if user input) ☐

Destination (if output) ☐

Data Elements Contained

Data Element Name		Reference
Priority class	Contract $ required	
Functional category	Labor $ required	
Type supply	Material and supplies $ required	
Unit cost	Equipment acquisition $ required	
Equipment acquisition $ cost	Total $ required	
Data type	Work accomplishment	
Funded cost	Financing type	
Unfunded cost	Reimbursing agency	
Status of facility	Performance standard	
Craft	Number of units	
Kind of installation		
Personnel type		
Facility component		
Unit of measure		

Remarks:

OPERATION LOGIC

Operation Name:
Associate Requirements and Costs with Program Elements and Groups of Similar Facilities

CODE: 1R01/02.12

Using (1) tables that relate each installation facility number with a facility group and with a user or program element, and (2) the facility numbers for which inspectors have identified requirements, the work coordinating center associates requirements and costs with user/program element/program and with the five major groups of facilities (buildings, surface improvements, grounds, utilities, and inactive). In the automated system, the requirements are also associated by the detailed groups of similar facilities.

Common-use facilities that are not associated with a particular user or program element are carried as common-use facilities until a later operation, when they are prorated to users or program elements as groups of similar facilities.

From assets data relating facility condition rating with facility number, the work coordinating center associates requirements with facility condition rating.

Inputs Described Elsewhere

1R01/02.12.S02	Station detail file (see 1R01/02.01.S02)
1R01/02.12.S60	RPMA facility groups and component file (see 1R01/02.08.S60)

INPUT/OUTPUT DATA DESCRIPTION

☒ Input Name	Station Detail File	OP CODE	1R01/02.12
☐ Output Name		FLOW CHART REF	1R01/02.12.S02

Description:

An assets file that relates facility number with user/program element/program and with facility condition rating.

Source (if user input) ☐

Destination (if output) ☐

Data Elements Contained

Data Element Name	Reference
Facility number	
User/program element/program	
FC^4	
Condition rating	

Remarks:

INPUT/OUTPUT DATA DESCRIPTION

☒ Input Name ☐ Output Name	RPMA Facility Groups and Components	OP CODE	1R01/02.12
		FLOW CHART REF	1R01/02.12.S60

Description:

Personnel in the work coordinating center use that portion of the input file that relates facility number at the installation with groups of similar facilities (through the FC^4).

Source (if user input) ☐

Destination (if output) ☐

Data Elements Contained

Data Element Name	Reference
Facility number FC^4	

Remarks:

OPERATION LOGIC

Operation Name:

Order Priorities of Projects

CODE: 1R01/02.13

The work coordinating center takes projects from functional categories 10 and 11 and orders the projects within each priority grouping (priority 1, 2, or 3 as defined in the RPMA Module Analysis Report, PRC R-1209, Vol. II, Part 2, July 1969).

Inputs Described Elsewhere

2R01/02.01.T.2	Program and budget guidance
2R01/02.01.T.3	General functional guidance
2R01/02.01.T.1	URR72 guidance
1R01/02.29.T.1-5	URR71-75
1R03.06.T.1-4	FURR71
1R05.08.T.1-5	PYPR69

INPUT/OUTPUT DATA DESCRIPTION

☐ Input Name ☒ Output Name	Functional Categories 10, 11, and 12 (Partial) Requirements	OP CODE	1R01/02.13
		FLOW CHART REF	1R01/02.13.T.1

Description:

Resulting requirements and costs, with projects ordered within priority groups, and with requirements and costs associated by program element and groups of similar facilities.

Source (if user input) ☐

Destination (if output) ☒

1R01/02.23
1R01/02.26
1R01/02.27

Data Elements Contained

Data Element Name		Reference
Functional category	Contract $ required	Appendix B
Priority class	Labor $ required	
Program/program element/user	Material and supplies $ required	
Condition rating	Equipment acquisition $ required	
Narrative title	Total $ required	
Narrative description		
Unit cost		
Equipment type		
Appropriation		
Status		
Facility number		
Condition rating		
Facility component		
Unit of measure		

Remarks:

OPERATION LOGIC

Operation Name:

Check Projects Against Master Plan

CODE: 1R01/02.14

Projects that have been identified by inspectors, by user request, or by craftsmen in the course of normal repair and maintenance operations and the backlog of minor construction projects are individually checked against the installation master plan to insure that siting is not contrary to current development plans.

INPUT/OUTPUT DATA DESCRIPTION

☒ Input Name ☐ Output Name	Backlog of Planned Minor Construction Projects	OP CODE	1R01/02.14
		FLOW CHART REF	1R01/02.14.T.1

Description:

Minor construction projects are not normally planned in advance of the year they are executed. In some cases, however, they may be identified and planned. They should be documented on form DD1391 and maintained as a file until they are executed. The file of planned projects should be periodically reviewed to insure that the conditions that led to their development still exist.

Source (if user input) ☐

Destination (if output) ☐

Data Elements Contained

Data Element Name	Reference
Narrative title	
Narrative description	
Unit of measure	
Number of units	
Funded cost	
Unfunded cost	

Remarks:

INPUT/OUTPUT DATA DESCRIPTION

☒ Input Name	Installation Master Plan	OP CODE	1R01/02.14
☐ Output Name		FLOW CHART REF	1R01/02.14.T.2

Description:

The installation master plan is theoretically maintained at all permanent Army installations. It consists of site maps, the building information schedule, the tabulation of existing and required facilities, and several analytical reports. Master planning is covered by AR 210-20. It assists in installation development by allowing coordination of facility siting, utility distribution systems, etc.

Source (if user input) ☒ Post engineer

Destination (if output) ☐

Data Elements Contained

Data Element Name	Reference
	AR 210-20

Remarks:

INPUT/OUTPUT DATA DESCRIPTION

☒ Input Name	Project Requirement	OP CODE	1R01/02.14
☐ Output Name		FLOW CHART REF	1R01/02.14.T.3

Description:

Minor construction projects that have been identified by inspectors, by user request, and by craftsmen in the course of normal repair and maintenance operations.

Source (if user input) ☐

Destination (if output) ☐

Data Elements Contained

Data Element Name	Reference
Narrative title	
Narrative description	
Unit of measure	
Number of units	
Facility number	
Facility component	
Type of work	

Remarks:

OPERATION LOGIC

Operation Name:

Check Project Against Assets File

CODE: 1R01/02.15

Each project that consists of work on an existing facility is reviewed in light of the estimated remaining economic life and current value of that facility.

Inputs Described Elsewhere

1R01/02.15.S02 Station detail file (see 1R01/02.01.S02)

INPUT/OUTPUT DATA DESCRIPTION

☒ Input Name	Station Detail File	OP CODE	1R01/02.15
☐ Output Name		FLOW CHART REF	1R01/02.15.S02

Description:

The station detail file contains information on each facility within the responsibility of an installation. It contains selected data elements that specify physical and financial characteristics, historical information, and user identification. See Assets Storage and Retrieval Module Analysis and Design for the Integrated Facilities System, PRC R-1209, Vol. V, November 1969.

Source (if user input) ☐

Destination (if output) ☐

Data Elements Contained

Data Element Name	Reference
	Assets Storage and Retrieval Module Analysis and Design for the Integrated Facilities System, PRC R-1209, Vol. V, November 1969, Appendix D

Remarks:

OPERATION LOGIC

Operation Name:

Coordinate With New Construction

CODE: 1R01/02.16

Individual projects consisting of work to existing facilities are checked against new construction management area information to insure that no OMA minor construction is planned in conflict with other construction.

IFS FILE DESCRIPTION

IFS File Name:

New Construction File

1R01/02.16
CODE: S 41

General Contents:

An information set (record) for each project that has not been accepted for beneficial occupancy and is not currently pending approval as a new entry. Refer to page IV-97 of PRC Report R-1209, Vol. IV, December 1969, for a more detailed explanation.

Source:

1. DD forms 1391 and other current reporting systems
2. Status inputs

Security Classification:

Unclassified

Suggested Frequency of Update:

Daily

INPUT/OUTPUT DATA DESCRIPTION

☒ Input Name	New Construction File	OP CODE	1R01/02.16
☐ Output Name		FLOW CHART REF	1R01/02.16.S41

Description:

The new construction management area data files of interest here are the construction and suspense files. The suspense file contains information on projects that are pending review and approval. The construction file contains information on each project that has not been accepted for beneficial occupancy and is not currently pending approval as a new entry. For a more complete discussion see PRC R-1209, Vol. IV, December 1969.

Source (if user input) ☐

Destination (if output) ☐

Data Elements Contained

Data Element Name	Reference
	New Construction Module Analysis and Design for the Integrated Facilities System, PRC R-1209, Vol. IV, December 1969

Remarks:

INPUT/OUTPUT DATA DESCRIPTION

☐ Input Name	OP CODE	1R01/02.16
☒ Output Name Required Projects	FLOW CHART REF	1R01/02.16.T.1

Description:

Minor construction projects must be evaluated in terms of the value and estimated economic life of the facility on which they will be performed. They must also be coordinated with planned construction funded from other than the OMA appropriation. Those remaining as required projects after these operations constitute this data set.

Source (if user input) ☐

Destination (if output) ☒ 1R01/02.17

Data Elements Contained

Data Element Name	Reference
Narrative title	
Narrative description	
Unit of measure	
Number of units	
Funded cost	
Unfunded cost	

Remarks:

OPERATION LOGIC

Operation Name:

Forecast Additional Projects

CODE: 1R01/02.17

Based on the number of required projects and historical data on minor construction projects performed in recent years, the work coordinating center estimates the additional minor construction projects that can be expected but cannot be identified at the time of URR submittal.

Inputs Described Elsewhere

1R03.06.T.1-4	FURR 71
1R05.08.T.1-5	PYPR 69
1R01/02.16.T.1	Required projects

INPUT/OUTPUT DATA DESCRIPTION

☐ Input Name ☒ Output Name	Minor Construction Projects	OP CODE	1R01/02.17
		FLOW CHART REF	1R01/02.17.T.1

Description:

List of minor construction projects made up of identified required projects and expected but unidentified projects to be completed in the fiscal years addressed by the URR.

Source (if user input) ☐

Destination (if output) ☒ 1R01/02.11

Data Elements Contained

Data Element Name	Reference
Priority class Narrative title Narrative description Functional category Unit of measure Number of units Type of work Facility number Facility component	

Remarks:

OPERATION LOGIC

Operation Name:

Determine Fire Prevention and Protection Requirements

CODE: 1R01/02.18

To determine the requirements for fire prevention and protection, the Fire Division chief considers such factors as the square footage of all buildings, projected installation population, fire data from prior years, number of fire fighting personnel, and other factors found in fire prevention and protection standards TM 5-315, TM 5-687, TM 5-695, TM 5-696, and others.

Inputs Described Elsewhere

1R01/02.18.T.1	Work management data (see 1R01/02.04.T.1)
1R01/02.18.T.4	Installation population projections (see 1R01/02.01.T.2)
2R01/02.01.T.2	Program and budget guidance
2R01/02.01.T.3	General functional guidance
2R01/02.01.T.1	URR_{72} guidance
1R01/02.29.T.1-5	URR_{71-75}

INPUT/OUTPUT DATA DESCRIPTION

☒ Input Name ☐ Output Name	Fire Prevention and Protection Standards	OP CODE	1R01/02.18
		FLOW CHART REF	1R01/02.18.T.2

Description:

Policies and responsibilities are prescribed by the Army for fire prevention and protection. Standards and procedures for fire prevention and protection are used in determining requirements.

Source (if user input) ☒ AR 420-90

Destination (if output) ☐

Data Elements Contained

Data Element Name	Reference
Equipment type Personnel type Type supply	

Remarks:

INPUT/OUTPUT DATA DESCRIPTION

☒ Input Name	Prior Year$_{69}$ Fire Data	OP CODE	1R01/02.18
☐ Output Name		FLOW CHART REF	1R01/02.18.T.3

Description:

The fire report is used for reporting all fires that exceed $100 in damage or result in loss of life. From this source, the post engineer can determine the magnitude of prior-year losses and the character of prior-year fires. With these two inputs he can accurately project.

Source (if user input) ☒ Eng-7(R3)

Destination (if output) ☐

Data Elements Contained

Data Element Name	Reference
Facility number Unit of measure Number of units	

Remarks:

INPUT/OUTPUT DATA DESCRIPTION

☐ Input Name ☒ Output Name	Fire Prevention and Protection Requirement	OP CODE	1R01/02.18
		FLOW CHART REF	1R01/02.18.T.5

Description:

The post engineer, who is also the post fire marshall, must predict fire prevention and protection needs. Fire department and equipment needs remain constant, but other needs are not easy to predict: they can best be estimated using historical data.

Source (if user input) ☐

Destination (if output) ☒ 1R01/02.19

Data Elements Contained

Data Element Name	Reference
Type of work	
Labor $ required	
Type supply	
Material and supplies $ required	
Equipment type	
Equipment acquisition $ required	
Functional category	
Priority class	

Remarks:

OPERATION LOGIC

Operation Name:

Estimate Costs

CODE: 1R01/02.19

After the requirements have been generated, the cost estimates can be determined by considering the amount of manpower, materials, and equipment necessary to satisfy the existing requirements.

Such factors as operating standards, types of personnel, and program and budget guidance should be used during the cost estimating phase.

Inputs Described Elsewhere

1R01/02.18.T.5 Fire prevention and protection requirement

INPUT/OUTPUT DATA DESCRIPTION

☒ Input Name Operating Standards	OP CODE	1R01/02.19
☐ Output Name	FLOW CHART REF	1R01/02.19.T.1

Description:

The Army has issued basic fire prevention and protection standards and general operational procedures. They are set forth in the cited technical manuals.

Source (if user input) ☒ TM 5-315
TM 5-687

Destination (if output) ☐ TM 5-695
TM 5-696

Data Elements Contained

Data Element Name	Reference
Equipment type	
Personnel type	
Type supply	

Remarks:

INPUT/OUTPUT DATA DESCRIPTION

☒ Input Name	Work Management Data	OP CODE	1R01/02.19
☐ Output Name		FLOW CHART REF	1R01/02.19.T.2

Description:

See 1R01/02.04.T.1, particularly the historical cost data relating to fire prevention and protection.

Source (if user input) ☐

Destination (if output) ☐

Data Elements Contained

Data Element Name	Reference
Same as 1R01/02.04.T.1	

Remarks:

INPUT/OUTPUT DATA DESCRIPTION

☐ Input Name ☒ Output Name	Fire Prevention and Protection URR Requirement	OP CODE	1R01/02.19
		FLOW CHART REF	1R01/02.19.T.3

Description:

The result of estimating costs (1R01/02.19) generates a fire requirement that appears on the URR. This requirement shows expenses for the target year. These expenses are broken into labor, materials, and equipment. A total estimate for the succeeding 4 years is also generated.

Source (if user input) ☐

Destination (if output) ☒ 1R01/02.23

Data Elements Contained

Data Element Name	Reference
Labor $ required	
Material and supplies $ required	
Equipment acquisition $ required	
Functional category	
Total $ required	

Remarks:

OPERATION LOGIC

Operation Name:

Determine Refuse Handling Requirements

CODE: 1R01/02.20

To determine the requirements for refuse handling, the refuse collection disposal section considers such factors as effective post population, types of collection and disposal employed, amount of refuse previously collected, and other factors in TM 5-634.

Refuse handling requirements are broken into in-house and contract activities because the projection yields a better understanding of the problems associated with each and a more realistic division of refuse handling.

Inputs Described Elsewhere

1R01/02.20.T.2	Installation population projections (see 1R01/02.01.T.2)
2R01/02.01.T.3	General functional guidance
2R01/02.01.T.1	URR72 guidance
1R01/02.29.T.1-5	URR71-75

INPUT/OUTPUT DATA DESCRIPTION

☒ Input Name	Work Management Data	OP CODE	1R01/02.20
☐ Output Name		FLOW CHART REF	1R01/02.20.T.1

Description:

See 1R01/02.04.T.1, particularly historical or data refuse handling requirements.

Source (if user input) ☐

Destination (if output) ☐

Data Elements Contained

Data Element Name	Reference
Same as 1R01/02.04.T.1	

Remarks:

INPUT/OUTPUT DATA DESCRIPTION

☒ Input Name	Standards	OP CODE	1R01/02.20
☐ Output Name		FLOW CHART REF	1R01/02.21.T.3

Description:

Policies, guidelines, directives, procedures, and regulations found in Army publications to establish uniform procedures and parameters for developing refuse handling requirements.

Source (if user input) ☐

Destination (if output) ☐

Data Elements Contained

Data Element Name	Reference
Functional category	
Unit of measure	
Data type	
Number of units	

Remarks:

INPUT/OUTPUT DATA DESCRIPTION

☐ Input Name	Refuse Handling Requirements	OP CODE	1R01/02.20
☒ Output Name		FLOW CHART REF	1R01/02.20.T.4

Description:

Refuse handling requirements, including collection and disposal activities, are generated by the post engineer to give visibility to the magnitude of this activity. At this point, foreseeable problems such as imminent overflow of existing land fill activity should be made known.

Source (if user input) ☐

Destination (if output) ☒ 1R01/02.06
1R01/02.07

Data Elements Contained

Data Element Name	Reference
Equipment type	
Personnel type	
Type supply	

Remarks:

OPERATION LOGIC

Operation Name:
Determine Custodial, Entomological, and Snow Removal Requirements

CODE: 1R01/02.21

The preventive maintenance and custodial section, the entomology section, and the pavements section determine requirements by priority for custodial, entomological, snow removal, and ice alleviation services based on the following standards references:

TM 5-609 - - - - Custodial Services
TM 5-632 - - - - Military Entomology
TM 5-624 - - - - Roads and Highways

Common to each of these activities are data such as square footage serviced, effective post population, in-house versus contract activities, and many other necessary items that will be available from the work management data file.

Inputs Described Elsewhere

1R01/02.21.T.2	Installation population projections (see 1R01/02.01.T.2)
2R01/02.01.T.3	General functional guidance
2R01/02.01.T.1	URR72 guidance
1R01/02.29.T.1-5	URR71-75

INPUT/OUTPUT DATA DESCRIPTION

☒ Input Name	Work Management Data	OP CODE	1R01/02.21
☐ Output Name		FLOW CHART REF	1R01/02.21.T.1

Description:

See 1R01/02.04.T.1, particularly historical data on custodial, entomological, and snow removal requirements.

Source (if user input) ☐

Destination (if output) ☐

Data Elements Contained

Data Element Name	Reference
Same as 1R01/02.04.T.1	

Remarks:

INPUT/OUTPUT DATA DESCRIPTION

☒ Input Name	Standards	OP CODE	1R01/02.21
☐ Output Name		FLOW CHART REF	1R01/02.21.T.3

Description:

See 1R01/02.20.T.3 for custodial, entomological, and snow removal requirements.

Source (if user input) ☒ TM 5-609
TM 5-632

Destination (if output) ☐ TM 5-624

Data Elements Contained

Data Element Name	Reference
Functional category Unit of measure Data type	

Remarks:

INPUT/OUTPUT DATA DESCRIPTION

☐ Input Name ☒ Output Name	Custodial, Entomological, and Snow Removal Requirements	OP CODE	1R01/02.21
		FLOW CHART REF	1R01/02.21.T.4

Description:

Characteristic of each post are basic requirements that must be met and are relatively predictable. The physical size and effective post population are primary sources of information that yield these characteristic requirements.

Source (if user input) ☐

Destination (if output) ☒ 1R01/02.11

Data Elements Contained

Data Element Name	Reference
Equipment type Type supply Personnel type Work accomplishment	

Remarks:

OPERATION LOGIC

Operation Name:
Determine Management Engineering and Other Miscellaneous Engineering Activities and Requirements

CODE: 1R01/02.22

The post engineer generates master planning requirements in response to standards that prescribe active maintenance of the approved master plan (TB Eng 353, AR 210-20, and AR 210-22).

Miscellaneous engineering activities requirements are generated by the post engineer to show those factors that are associated with this operation. In most cases all activities that are not rigidly defined by AR 37-100-70 are costed against 9080.9. To and in the visibility of this category, the post engineer generates these requirements:

Rents, initial alternatives, and restorations
Special maintenance activities
Purchased local maintenance
Expenses for maintenance and service equipment

Inputs Described Elsewhere

1R05.08.T.1-5 $PYPR_{69}$

INPUT/OUTPUT DATA DESCRIPTION

☒ Input Name	Work Management Data	OP CODE	1R01/02.22
☐ Output Name		FLOW CHART REF	1R01/02.22.T.1

Description:

See 1R01/02.04.T.1, particularly the requirements being determined.

Source (if user input) ☐

Destination (if output) ☐

Data Elements Contained

Data Element Name	Reference
Same as 1R01/02.04.T.1	

Remarks:

INPUT/OUTPUT DATA DESCRIPTION

☒ Input Name	Standards	OP CODE	1R01/02.22
☐ Output Name		FLOW CHART REF	1R01/02.22.T.2

Description:

See 1R01/02.20.T.2 for management engineering and other miscellaneous engineering activities requirements.

Source (if user input) ☒ TB Eng 353
AR 210-20
AR 210-22

Destination (if output) ☐

Data Elements Contained

Data Element Name	Reference

Remarks:

INPUT/OUTPUT DATA DESCRIPTION

☐ Input Name ☒ Output Name	Miscellaneous Engineering Requirements	OP CODE	1R01/02.22
		FLOW CHART REF	1R01/02.22.T.3

Description:

Dollar requirements for management engineering and other miscellaneous engineering activities.

Source (if user input) ☐

Destination (if output) ☒

1R01/02.23
1R01/02.26
1R01/02.27

Data Elements Contained

Data Element Name	Reference
Contract $ required Labor $ required Material and supplies $ required Equipment acquisition $ required	

Remarks:

OPERATION LOGIC

Operation Name:

Review and Consolidate URR Requirements

CODE: 1R01/02.23

The work coordinating center receives inputs for each functional category (09 through 12) from the operating divisions--Buildings and Grounds, Utilities, and Fire Prevention and Protection--and from the Supply and Storage Division. The work coordinating center reviews the URR requirements and consolidates them by functional category.

Inputs Described Elsewhere

1R01/02.22.T.3	Miscellaneous engineering requirements
2R01/02.01.T.2	Program and budget guidance
2R01/02.01.T.3	General functional guidance
2R01/02.01.T.1	URR_{72} guidance
1R03.06.T.1-4	$FURR_{71}$
1R01/02.23.T.1	Work management data (see 1R01/02.04.T.1)
1R01/02.29.T.1-5	URR_{71-75}
1R05.08.T.1-5	$PYPR_{69}$
1R01/02.13.T.1	Functional categories 10, 11, and 12 (partial) requirements
1R01/02.07.T.1	Utility URR requirements
1R01/02.19.T.3	Fire prevention and protection URR requirements

INPUT/OUTPUT DATA DESCRIPTION

☒ Input Name ☐ Output Name	Suggested Project/ Requirement Changes and Guidance	OP CODE	1R01/02.23
		FLOW CHART REF	2R01/02.08.T.1

Description:

This input is received from higher headquarters and considered during reexamination, revision, and repreparation of the URR.

Source (if user input) ☒ 2R01/02.08

Destination (if output) ☐

Data Elements Contained

Data Element Name	Reference
Same as URR	

Remarks:

INPUT/OUTPUT DATA DESCRIPTION

☐ Input Name ☒ Output Name	Consolidated URR Requirements	OP CODE	1R01/02.23
		FLOW CHART REF	1R01/02.23.T.2

Description:

URR requirements consolidated for the installation by functional category, priority, and facility condition rating.

Source (if user input) ☐

Destination (if output) ☒

1R01/02.25
1R01/02.26
1R01/02.27

Data Elements Contained

Data Element Name	Reference
Functional category	
Priority class	
User/program element/program	
Condition rating	
Labor $ required	
Material and supplies $ required	
Equipment acquisition $ required	
Total $ required	

Remarks:

OPERATION LOGIC

Operation Name:

Coordinate Contract Costs

CODE: 1R01/02.24

The work coordinating center coordinates with the Engineering and Services Branch the cost estimates of all nonutility requirements to be accomplished by contract, since the Engineering and Services Branch monitors these contracts. The work coordinating center coordinates utility contract requirements with the Utilities Division.

OPERATION LOGIC

Operation Name:
Prorate Common Elements by Program Elements

CODE: 1R01/02.25

Requirements common to all users at an installation--utilities, many of the engineering services, maintenance, repair, and minor construction--are prorated among all program elements or users represented at the installation. The basis for prorating is some mutually agreeable formula worked out by the user representatives at the installation. Such criteria as each user's percentage of installation population, each user's percentage of the total square footage, or percentage of the post engineer's direct man-hours charged each user, are used.

Inputs Described Elsewhere

1R01/02.23.T.2	Consolidated URR requirements
1R01/02.25.S02	Station detail file (see 1R01/02.01.S02)

OPERATION LOGIC

Operation Name:
Review and Recommend Priorities and Ordering of Projects

CODE: 1R01/02.26

When consolidating the URR, the work coordinating center ranks or orders projects within priority grouping 1, 2, or 3. The post engineer reviews the priority ordering of the projects and sends his recommendation for project priority ordering to the Installation Planning Board.

Inputs Described Elsewhere

1R01/02.22.T.3	Miscellaneous engineering requirements
2R01/02.01.T.2	Program and budget guidance
2R01/02.01.T.3	General functional guidance
2R01/02.01.T.1	URR72 guidance
1R03.06.T.1-4	FURR71
2R01/02.08.T.1	Suggested project/requirement changes and guidance
1R01/02.26.T.1	Work management data (see 1R01/02.04.T.1)
1R01/02.29.T.1-5	URR71-75
1R05.08.T.1-5	PYPR69
1R01/02.13.T.1	Functional categories 10, 11, and 12 (partial) requirements
1R01/02.23.T.2	Consolidated URR requirements

OPERATION LOGIC

Operation Name:

Approve Major Project Priorities

CODE: 1R01/02.27

The Installation Planning Board, made up of representatives of the various installation tenants and the post engineer, determines the priority of major post engineer projects.

Inputs Described Elsewhere

Same as for operation 1R01/02.26

OPERATION LOGIC

Operation Name:
Prepare URR Summary, Consolidation, Detail, and Project and Equipment List Reports

CODE: 1R01/02.28

The work coordinating center takes the Installation Planning Board's recommended priority ordering of projects and, with the other URR requirements, prepares the URR, which includes a consolidation sheet by functional category for the installation and each user or program element/program, a more detailed summary sheet for the installation and each user or program element, a backup list of projects greater than $10,000 (and lump sum total of others) and a backup list of equipment acquisition. Once the system is automated, a detailed backup report is prepared for functional category 10.

REPORT DESCRIPTION - PART A

Report Name:

Installation URR Reports

FLOW CHART REF: 1R01/02.28 . R 1-5

Description:

See 1R01/02.29.T.1-5, which is composed of:

1R01/02.29.T.1	Installation URR consolidation data
1R01/02.29.T.2	Installation URR summary data
1R01/02.29.T.3	Installation URR detail data
1R01/02.29.T.4	Installation URR project list
1R01/02.29.T.5	Installation URR equipment list

Estimated Number of Pages:

6 pages excluding 1R01/02.29.T.3 (in automated system only)

Suggested Frequency:

Annual

Trigger(s) for Report Production:

URR guidance

Required Response Time:

45 working days from installation to HQ DA

Selection and Summarization Options:

OPERATION LOGIC

Operation Name:

Approve Installation URR

CODE 1R01/02.29

The URR is sent by the post engineer, with his recommended approval, to the installation commander for his approval. The URR is then forwarded to the MSC.

INPUT/OUTPUT DATA DESCRIPTION

☐ Input Name	Installation URR	OP CODE	1R01/02.29
☒ Output Name	Consolidation Data	FLOW CHART REF	1R01/02.29.T.1

Description:

A report that displays the unconstrained RPMA requirements for the entire installation--by user/program element/program, functional category, priority class, and condition rating--and has total dollar requirements broken into contracts, labor, material and supplies, and equipment acquisition.

Source (if user input) ☐

Destination (if output) ☒ 2R01/02.02

Data Elements Contained

Data Element Name	Reference
Priority class Functional category Installation code Condition rating User/program element/program Contract $ required Labor $ required Material and supplies $ required Equipment acquisition $ required Total $ required Type year	1. Appendix B 2. Instl URR report format

Remarks:

INPUT/OUTPUT DATA DESCRIPTION

☐ Input Name	Installation URR	OP CODE	1R01/02.29
☒ Output Name	Summary Data	FLOW CHART REF	1R01/02.29.T.2

Description:

A report that displays the installation's unconstrained RPMA requirements in more detail than 1R01/02.29.T.1--by user/program element/program (once automated), functional category, priority class, condition rating, and groups of similar facilities--and has total dollar requirements broken into contracts, labor, material and supplies, and equipment acquisition.

Source (if user input) ☐

Destination (if output) ☒ 2R01/02.02

Data Elements Contained

Data Element Name	Reference
Priority class Functional category Installation code Condition rating User/program element/program Contract $ required Labor $ required Material and supplies $ required Equipment acquisition $ required Total $ required Dollars earned Status	1. Appendix B 2. Instl URR report format

Remarks:

INPUT/OUTPUT DATA DESCRIPTION

☐ Input Name	Installation URR	OP CODE	1R01/02.29
☒ Output Name	Detail Data	FLOW CHART REF	1R '/02.29.T.3

Description:

Backup detail available once that system is automated in which maintenance and repair requirements are available by user/program element/program, groups of similar facilities, condition rating, priority class, and facility component.

Source (if user input) ☐

Destination (if output) ☒ 2R01/02.02

Data Elements Contained

Data Element Name	Reference
Priority class	
Functional category	
Status	
Condition rating	
Facility component	
User/program element/program	
Contract $ required	
Material and supplies $ required	
Labor $ required	
Total $ required	

Remarks:

INPUT/OUTPUT DATA DESCRIPTION

☐ Input Name	Installation URR	OP CODE	1R01/02.29
☒ Output Name	Project List	FLOW CHART REF	1R01/02.29.1.4

Description:

A list of the installation project requirements by user/program element/program, priority class, and type of work (alteration, maintenance and repair project, etc.).

Source (if user input) ☐

Destination (if output) ☒ 2R01/02.02

Data Elements Contained

Data Element Name	Reference
Priority class Narrative title Functional category Installation code Facility number Facility component Unit of measure Number of units User/program element/program Total $ required Type of work	1. Appendix B 2. Instl URR report format

Remarks:

INPUT/OUTPUT DATA DESCRIPTION

☐ Input Name	Installation URR	OP CODE	1R01/02.29
☒ Output Name	Equipment List	FLOW CHART REF	1R01/02.29.T.5

Description:

A list of the installation equipment acquisition requirements, listed by user/program element/program, priority class, order within the priority grouping, description of the equipment, functional category, number of units, unit cost, and total cost. The equipment to be acquired is that equipment under $1,000 procured under the OMA appropriation.

Source (if user input) ☐

Destination (if output) ☒ 2R01/02.02

Data Elements Contained

Data Element Name	Reference
Priority class Functional category Unit cost Number of units Equipment type User/program element/program Equipment acquisition $ required Installation code	1. Appendix B 2. Instl URR report format

Remarks:

INPUT/OUTPUT DATA DESCRIPTION

☐ Input Name	OP CODE	1R01.02.29
☒ Output Name Work Management Data	FLOW CHART REF	1R01.02.29T.1

Description:

All those data elements and data items collected by the post engineer organization and used for internal management and preparation of reports; include historical performance data as well as projected requirements.

Source (if user input) ☒ Work Management System

Destination (if output) ☐

Data Elements Contained

Data Element Name	Reference
See 1R01/02.04.T.1	Section V

Remarks:

OPERATION LOGIC

Operation Name:
Limit the Examination of URR Requirements to Those Questioned by MSC

CODE: 1R01/02.30

Once the MSC receives and examines the URR and raises questions with the installation, the installation reexamines its URR on an exception basis, reconsidering only those requirements questioned by the MSC.

OPERATION LOGIC

Operation Name:

Review and Amplify Guidance

CODE: 2R01/02.01

The MSC receives from the MAFC RPMA functional guidance that precedes preparation of the URR by installations. The MSC reviews this guidance and amplifies upon it for its particular command area before forwarding it to installations prior to URR preparation.

Inputs Described Elsewhere

3R01/02.01.T.2	URR_{72} guidance
3R01/02.01.T.3	Program and budget guidance
3R01/02.01.T.4	General functional guidance

INPUT/OUTPUT DATA DESCRIPTION

☐ Input Name	OP CODE	2R01/02.01
☒ Output Name URR_{72} Guidance	FLOW CHART REF	2R01/02.01.T.1

Description:

That guidance originally prepared by RPMAO to be followed in the preparation of the 1972 URR, which has been reviewed and amplified by the MSC before being forwarded to installations; could address any of the data elements listed below.

Source (if user input) ☐

Destination (if output) ☐

Data Elements Contained

Data Element Name	Reference
Priority class Functional category Appropriation Status Condition rating Facility component FC^4 User/program element/program Work accomplishment (in-house, contract) Financing type OMA subappropriation FHMA subappropriation RDT&E subappropriation	Appendix B

Remarks:

INPUT/OUTPUT DATA DESCRIPTION

☐ Input Name ☒ Output Name	Program and Budget Guidance	OP CODE	2R01/02.01
		FLOW CHART REF	2R01/02.01.T.2

Description:

Contains dollar guidance for the preparation of command budgets and for reprogramming activities. The Facilities Engineering Division of the MSC would develop the RPMA input for the MSC PBG to be forwarded to installations by the MSC comptroller.

Source (if user input) ☐

Destination (if output) ☐

Data Elements Contained

Data Element Name	Reference
Functional category	
Funded cost	
Unfunded cost	
Appropriation	
User/program element/program	
Status of financing	
Financing type	
OMA subappropriation	
FHMA subappropriation	
RDT&E subappropriation	

Remarks:

INPUT/OUTPUT DATA DESCRIPTION

☐ Input Name ☒ Output Name	General Functional Guidance	OP CODE	2R01/02.01
		FLOW CHART REF	2R01/02.01.T.3

Description:

Prepared annually by RPMAO and updated on an ad hoc basis throughout the year; addresses the RPMA management area and documents. This output is general functional guidance reviewed and amplified by the Facilities Engineering Division of the MSC before being forwarded to installations.

Source (if user input) ☐

Destination (if output) ☐

Data Elements Contained

Data Element Name		Reference
Functional category	Fiscal quarter	
Priority class	Work accomplishment	
Narrative title	Financing type	
Narrative description	Reimbursing agency	
Equipment type	Performance unit of measure	
Data type	Performance standard	
Appropriation		
Status		
Personnel type		
Condition rating		
FC^4		
User/program element/program		
Type year		
Status of financing		

Remarks:

OPERATION LOGIC

Operation Name:

Validate Each URR Project and Each Other Requirement

CODE: 2R01/02.02

The Facilities Engineering Division of the MSC examines each URR project and other requirement based on the input documents and guidance indicated on the flow chart. They examine the projects and other requirements based on (1) projected mission changes whose impact on facilities has been considered, (2) previous unit costs, and (3) their judgment and knowledge of command area activities and installations. Questions and suggested changes are identified.

Inputs Described Elsewhere

3R01/02.07.T.1	Suggested project/requirement changes and guidance
1R01/02.29.T.2	Installation URR summary data
1R01/02.29.T.1	Installation URR consolidation data
1R01/02.29.T.4	Installation URR project list
2R01/02.01.T.2	Program and budget guidance
2R01/02.01.T.3	General functional guidance
2R01/02.02.T.1	Installation master plan (see 1R01/02.14.T.2)
1R05.08.T.1-5	$PYPR_{69}$
2R05.07.T.1-3	$PYPR_{69}$
2R01/02.01.T.1	URR_{72} guidance
2R03.10.T.1-5	$FURR_{71}$
2R01/02.10.T.1-7	URR_{71-75}
2R04.10.T.1-3	$MYRR_{70}$
1R01/02.29.T.5	Installation URR equipment list

INPUT/OUTPUT DATA DESCRIPTION

☒ Input Name	SAWP's$_{70}$	OP CODE	2R01/02.02
☐ Output Name		FLOW CHART REF	2R03.18.T.1-6

Description:

A functional management document for use in the budgeting function; translates the installation AWP and presents a summary of that plan in a format similar to the other management documents used in the RPMA design.

Source (if user input) ☐

Destination (if output) ☐

Data Elements Contained

Data Element Name	Reference
Same as 2R03.10.T.1-5, plus: Facility component Fiscal quarter	1. Appendix B 2. SAWP report format

Remarks:

OPERATION LOGIC

Operation Name:
Consider the Priority and Suggested Order for Each Project

CODE: 2R01/02.03

The Facilities Engineering Division of the MSC examines the list of projects based on (1) the input documents and guidance shown on the flow chart, (2) their own technical judgment and knowledge of command area activities and installations, and (3) their knowledge of program mission changes. Questions and suggested changes are identified.

Inputs Described Elsewhere

See 2R01/02.02

OPERATION LOGIC

Operation Name:

Reconcile Differences With Installation Involved

CODE: 2R01/02.04

Through conversations and other informal communications, the Facilities Engineering Division of the MSC and the installation post engineering organization reach agreement on any differences over suggested changes and questions raised by the MSC.

OPERATION LOGIC

Operation Name:
Limit the Examination of URR Requirements to Those Questioned by MAFC

CODE: 2R01/02.05

Once the MAFC examines the URR and raises questions with the MSC, the MSC reexamines its URR on an exception basis, reconsidering only those requirements questioned by the MAFC.

OPERATION LOGIC

Operation Name:

Put Projects/Requirements in Accepted Status

CODE: 2R01/02.06

If the priorities and order of URR projects and requirements are found to be correct and no changes are necessary, they are placed in an accepted status.

OPERATION LOGIC

Operation Name:

Puts Projects/Requirements in Unaccepted Status

CODE: 2R01/02.07

If the priorities and order of URR projects and requirements are found to be incorrect or changes are necessary, they are placed in an unaccepted status.

OPERATION LOGIC

Operation Name:
Suggest Changes to Each Installation Involved

CODE: 2R01/02.08

For those projects and other requirements which require additions, deletions, or other modifications, the MSC suggests changes to each installation involved.

INPUT/OUTPUT DATA DESCRIPTION

☐ Input Name ☒ Output Name	Suggested Projects/ Requirements Changes and Guidance	OP CODE	2R01/02.08
		FLOW CHART REF	2R01/02.08.T.1

Description:

Contains suggested changes in projects/requirements and guidance to the installation for correcting the URR.

Source (if user input) ☐

Destination (if output) ☒

1R01/02.23
1R01/02.26
1R01/02.27

Data Elements Contained

Data Element Name	Reference
Same as 2R01/02.01.T.1	

Remarks:

OPERATION LOGIC

Operation Name:

Consolidate and Order All Projects/Requirements

CODE: 2R01/02.09

Once all differences between the MSC and installations--with regard to projects and other requirements--are reconciled, and all projects/requirements are placed in an accepted status, the Facilities Engineering Division of MSC consolidates and orders all projects/requirements from the installations. Projects are ranked within priority group.

OPERATION LOGIC

Operation Name:
Prepare MSC Summary, Consolidation, and Project List Reports

CODE: 2R01/02.10

From the installation URR's and the consolidated MSC projects/requirements, the Facilities Engineering Division of the MSC prepares an MSC-wide URR consolidation and an MSC-wide URR summary by program element or user.

After approval by the MSC commanding officer, the MSC forwards (1) the MSC-wide URR consolidation, (2) the MSC-wide URR backup summary, (3) the installation URR consolidation, (4) a list of projects greater than $10,000 listed in priority order for the MSC, (5) the installation revised lists of projects, (6) the installation revised URR backup summary data, and (7) the installation revised URR detail data.

INPUT/OUTPUT DATA DESCRIPTION

☐ Input Name ☒ Output Name	MSC URR Consolidation Data	OP CODE	2R01/02.10
		FLOW CHART REF	2R01/02.10.T.1

Description:

A report that displays the unconstrained RPMA requirements consolidated for the entire MSC--by user/program element/program, functional category, priority class, and condition rating--and has total dollar requirements broken into contracts, labor, materials and supplies, and equipment acquisition.

Source (if user input) ☐

Destination (if output) ☒ 3R01/02.02

Data Elements Contained

Data Element Name	Reference
Same as 1R01/02.29.T.1, with following exceptions: Delete installation code Add command abbreviation	1. Appendix B 2. MSC URR report format

Remarks:

INPUT/OUTPUT DATA DESCRIPTION

☐ Input Name ☒ Output Name	MSC URR Summary Data	OP CODE	2R01/02.10
		FLOW CHART REF	2R01/02.10.T.2

Description:

A report that displays the unconstrained RPMA requirements for the entire MSC in more detail than 2R01/02.10.T.1, gives requirements for the MSC--by user/program element/program (once automated), functional category, priority class, condition rating, and groups of similar facilities--and has total dollar requirements broken into contracts, labor, material and supplies, and equipment acquisition.

Source (if user input) ☐

Destination (if output) ☒ 3R01/02.02

Data Elements Contained

Data Element Name	Reference
Same as 1R01/02.29.T.2, with the following exception: Add command abbreviation	1. Appendix B 2. MSC URR report format

Remarks:

INPUT/OUTPUT DATA DESCRIPTION

☐ Input Name		OP CODE	2R01/02.10
☒ Output Name	MSC URR Project List	FLOW CHART REF	2R01/02.10.T.3

Description:

A list of project requirements consolidated MSC-wide, by user/program element/program, priority class, and type of work.

Source (if user input) ☐

Destination (if output) ☒ 3R01/02.02
4R01/02.02
4R01/02.04

Data Elements Contained

Data Element Name	Reference
Same as 1R01/02.29.T.4, with the following exception: Add command abbreviation	1. Appendix B 2. MSC URR report format

Remarks:

INPUT/OUTPUT DATA DESCRIPTION

☐ Input Name	Revised Installation	OP CODE	2R01/02.10
☒ Output Name	URR Consolidatation Data	FLOW CHART REF	2R01/02.10.T.4

Description:

A report that displays the revised unconstrained RPMA requirements for the entire installation--by user/program element/program, functional category, priority class, and condition rating--and has total dollar requirements broken into contracts, labor, materials and supplies, and equipment acquisition.

Source (if user input) ☐

Destination (if output) ☒ 3R01/02.02
4R01/02.04

Data Elements Contained

Data Element Name	Reference
Same as 1R01/02.29.T.1	1. Appendix B 2. Instl URR report format

Remarks:

INPUT/OUTPUT DATA DESCRIPTION

☐ Input Name	Revised Installation URR	OP CODE	2R01/02.10
☒ Output Name	Summary Data	FLOW CHART REF	2R01/02.10.T.5

Description:

A report that displays the revised unconstrained RPMA requirements in more detail than 2R01/02.10.T.4, gives requirements for the installation--by user/program element/program (once automated), functional category, priority class, condition rating, and groups of similar facilities--and has total dollar requirements broken into contracts, labor, materials and supplies, and equipment acquisition.

Source (if user input) ☐

Destination (if output) ☒ 3R01/02.02
4R01/02.04

Data Elements Contained

Data Element Name	Reference
Same as 1R01/02.29.T.2	1. Appendix B 2. Instl URR report format

Remarks:

INPUT/OUTPUT DATA DESCRIPTION

☐ Input Name	Revised Installation	OP CODE	2R01/02.10
☒ Output Name	URR Detail Data	FLOW CHART REF	2R01/02.10.T.6

Description:

Revised backup detail available once that system is automated in which requirements for functional category 10 are available by user/program element/program, groups of similar facilities, condition rating, priority class, and facility component.

Source (if user input) ☐

Destination (if output) ☒ 3R01/02.02
4R01/02.04

Data Elements Contained

Data Element Name	Reference
Same as 1R01/02.29.T.3	1. Appendix B 2. Instl URR report format

Remarks:

INPUT/OUTPUT DATA DESCRIPTION

☐ Input Name ☒ Output Name	Revised Installation URR Project List	OP CODE	2R01/02.10
		FLOW CHART REF	2R01/02.10.T.7

Description:

A revised list of the installation project requirements by user/program element/program, priority class, and type of work (alteration, maintenance and repair project, etc.).

Source (if user input) ☐

Destination (if output) ☒

3R01/02.02
4R01/02.02
4R01/02.04

Data Elements Contained

Data Element Name	Reference
Same as 1R01/02.29.T.4	1. Appendix B 2. Instl URR report format

Remarks:

REPORT DESCRIPTION - PART A

Report Name:
MSC URR Reports

FLOW CHART REF: 2R01/02.10 . R 1-3

Description:

See 2R01/02.10.T.1-3

Estimated Number of Pages:

12 pages

Suggested Frequency:
Annual

Trigger(s) for Report Production:

URR guidance

Required Response Time:

45 working days from installation to HQ DA

Selection and Summarization Options:

OPERATION LOGIC

Operation Name:

Review and Amplify Guidance

CODE: 3R01/02.01

Same logic as 2R01/02.01. Guidance is received from HQ DA and forwarded to MSC's.

Inputs Described Elsewhere

4R01/02.01.T.5	URR72 guidance
4R06.01.T.1	General functional guidance

INPUT/OUTPUT DATA DESCRIPTION

☒ Input Name ☐ Output Name	Program and budget guidance	OP CODE	3R01/02.01
		FLOW CHART REF	3R01/02.01.T.1

Description:

Gives dollar guidance for preparation of command budgets and for reprogramming activities. Received from COA. Could address any of the data elements listed in 2R01/02.01.T.2.

Source (if user input) ☐

Destination (if output) ☐

Data Elements Contained

Data Element Name	Reference
Same as 2R01/02.01.T.2	

Remarks:

INPUT/OUTPUT DATA DESCRIPTION

☐ Input Name	OP CODE	3R01/02.01
☒ Output Name URR_{72} Guidance	FLOW CHART REF	3R01/02.01.T.2

Description:

URR_{72} guidance from the MAFC is originally prepared by the RPMAO. It is followed in preparing the 1972 URR after that document is reviewed and amplified by the MAFC and before it is forwarded to the MSC's. The URR guidance addresses any of the data elements listed below.

Source (if user input) ☐

Destination (if output) ☒ 2R01/02.01

Data Elements Contained

Data Element Name	Reference
Same as 2R01/02.01.T.1	

Remarks:

INPUT/OUTPUT DATA DESCRIPTION

☐ Input Name ☒ Output Name	Program and Budget Guidance	OP CODE	3R01/02.01
		FLOW CHART REF	3R01/02.01.T.3

Description:

Program and budget guidance contains dollar guidance for preparing command budgets and for reprogramming activities. The Facilities Engineering Division at MAFC develops the RPMA input for the MAFC program and budget guidance to be forwarded to the MSC's by the MAFC comptroller.

Source (if user input) ☐

Destination (if output) ☒ 2R01/02.01

Data Elements Contained

Data Element Name	Reference
Same as 2R01/02.01.T.2	

Remarks:

INPUT/OUTPUT DATA DESCRIPTION

☐ Input Name	General Functional Guidance	OP CODE	3R01/02.01
☒ Output Name		FLOW CHART REF	3R01/02.01.T.4

Description:

General functional guidance is prepared annually by the RPMAO and updated ad hoc throughout the year. It addresses the RPMA management area and documents. This output is general functional guidance that is reviewed and amplified by the Facilities Engineering Division of MAFC before being forwarded to MSC's.

Source (if user input) ☐

Destination (if output) ☒ 2R01/02.01

Data Elements Contained

Data Element Name	Reference
Same as 2R01/02.01.T.3	

Remarks:

OPERATION LOGIC

Operation Name:

Examine Each URR Project and Each Other Requirement

CODE: 3R01/02.02

Same as 2R01/02.02 but necessarily less detailed an examination. Performed by MAFC.

Inputs Described Elsewhere

2R01/02.10.T.1	MSC URR consolidation data
2R01/02.10.T.2	MSC URR summary data
2R01/02.10.T.3	MSC URR project list
2R01/02.10.T.7	Revised installation URR project lists
2R01/02.10.T.4	Revised installation URR consolidation data
3R03.16.T.1-8	SAWP70
3R01/02.01.T.3	Program and budget guidance
3R01/02.01.T.4	General functional guidance
1R05.08.T.1-5	PYPR69
2R05.07.T.1-3	PYPR69
3R05.07.T.1-3	PYPR69
3R01/02.01.T.2	URR72 guidance
3R03.09.T.1-6	FURR72
3R01/02.09.T.1-9	URR71-75
3R04.09.T.1-3	MYRR70
2R01/02.10.T.5	Revised installation URR summary data
2R01/02.10.T.6	Revised installation URR detail data

OPERATION LOGIC

Operation Name:
Consider the Priority and Suggested Order for Each Project

CODE: 3R01/02.03

Same as 2R01/02.03 but performed by MAFC.

Inputs Described Elsewhere

Same as for 3R01/02.02

OPERATION LOGIC

Operation Name:

Reconcile Differences With MSC's Involved

CODE: 3R01/02.04

Same as 2R01/02.04.

OPERATION LOGIC

Operation Name:

Put Project/Requirement in Accepted Status

CODE: 3R01/02.05

Same as 2R01/02.06.

OPERATION LOGIC

Operation Name:
Put Project/Requirement in Unaccepted Status

CODE: 3R01/02.06

Same as 2R01/02.07.

OPERATION LOGIC

Operation Name:

Suggested Changes to Each MSC Involved

CODE: 3R01/02.07

Same as 2R01/02.08 but performed by MAFC.

INPUT/OUTPUT DATA DESCRIPTION

☐ Input Name ☒ Output Name	Suggested Project/ Requirement Changes and Guidance	OP CODE	3R01/02.07
		FLOW CHART REF	3R01/02.07.T.1

Description:

Contains suggested changes in projects/requirements and guidance to the MSC for correcting the URR.

Source (if user input) ☐

Destination (if output) ☒ 2R01/02.02
2R01/02.03

Data Elements Contained

Data Element Name	Reference
Same as 3R01/02.01.T.2	

Remarks:

OPERATION LOGIC

Operation Name:

Consolidate and Order All Projects/Requirements

CODE: 3R01/02.08

Same as 2R01/02.09 but performed by MAFC.

OPERATION LOGIC

Operation Name:

Prepare MAFC Summary and Consolidation Reports

CODE: 3R01/02.09

From the MSCs' URR's and the consolidated MAFC projects and other requirements, the Facilities Engineering Division of the MAFC prepares an MAFC-wide URR consolidation and an MAFC-wide URR summary for the MAFC by program element or user.

After approval by the MAFC commanding officer, the MAFC forwards to HQ DA (1) the MAFC-wide URR consolidation, (2) the MAFC-wide URR backup summary, (3) the MSCs' URR consolidation, and (4) a list of projects greater than $10,000 in priority order for the MAFC, (5) the MSCs' lists of projects, (6) the installations' lists of projects, (7) the installations' revised URR consolidation data, (8) the installations' summary data, and (9) the installations' detail data.

INPUT/OUTPUT DATA DESCRIPTION

☐ Input Name	MAFC URR	OP CODE	3R01/02.09
☒ Output Name	Consolidation Data	FLOW CHART REF	3R01/02.09.T.1

Description:

A report that displays the unconstrained RPMA requirements consolidated for the entire MAFC, by user/program element/program, functional category, priority, and condition rating, and with total dollar requirements broken into contracts, labor, materials and supplies, and equipment.

Source (if user input) ☐

Destination (if output) ☒ 4R01/02.02
4R01/02.04

Data Elements Contained

Data Element Name	Reference
Priority class Functional category Command abbreviation Condition rating User/program element/program Contracts $ required Labor $ required Material and supplies $ required Equipment acquisition $ required Total $ required Type year	1. Appendix B 2. URR report format

Remarks:

INPUT/OUTPUT DATA DESCRIPTION

☐ Input Name ☒ Output Name	MAFC URR Summary Data	OP CODE	3R01/02.09
		FLOW CHART REF	3R01/02.09.T.2

Description:

This report displays the unconstrained RPMA requirements for the entire MAFC in more detail than the MAFC URR consolidation data. The report gives requirements for the MAFC by user/program element/program (when automated), functional category, priority, facility condition rating, and groups of similar facilities. Total dollar requirements are broken into contracts, labor, material and supplies, and equipments.

Source (if user input) ☐

Destination (if output) ☒ 4R01/02.02
4R01/02.04

Data Elements Contained

Data Element Name	Reference
Same as 1R01/02.29.T.2 plus: Command abbreviation	

Remarks:

INPUT/OUTPUT DATA DESCRIPTION

☐ Input Name		OP CODE	3R01/02.09
☒ Output Name	MAFC URR Project List	FLOW CHART REF	3R01/02.09.T.3

Description:

A list of project requirements consolidated MAFC-wide, by user/program element/program, priority, and type of work.

Source (if user input) ☐

Destination (if output) ☒ 4R01/02.02
4R01/02.04

Data Elements Contained

Data Element Name	Reference
Same as 3R01/02.09.T.9 plus: Command abbreviation	

Remarks:

INPUT/OUTPUT DATA DESCRIPTION

☐ Input Name ☒ Output Name	Revised MSC URR Consolidation Data	OP CODE	3R01/02.09
		FLOW CHART REF	3R01/02.09.T.4

Description:

This corrected report briefly displays the unconstrained RPMA requirements consolidated for the entire MSC by user/program element/program, functional category, priority, and condition rating. Total dollar requirements are broken into contracts, labor, material and supplies, and equipment.

Source (if user input) ☐

Destination (if output) ☒ 4R01/02.02
4R01/02.04

Data Elements Contained

Data Element Name	Reference
Same as 3R01/02.09.T.1	

Remarks:

INPUT/OUTPUT DATA DESCRIPTION

☐ Input Name ☒ Output Name	Revised MSC URR Project List	OP CODE	3R01/02.09
		FLOW CHART REF	3R01/02.09.T.5

Description:

A corrected list of project requirements consolidated MSC-wide, by user/program element/program, priority, and type of work.

Source (if user input) ☐

Destination (if output) ☒ 4R01/02.02
4R01/02.04

Data Elements Contained

Data Element Name	Reference
Same as 3R01/02.09.T.9 plus: Command abbreviation	

Remarks:

INPUT/OUTPUT DATA DESCRIPTION

☐ Input Name	Revised Installation URR	OP CODE	3R01/02.09
☒ Output Name	Consolidation Data	FLOW CHART REF	3R01/02.09.T.6

Description:

Same as 2R01/02.10.T.4

Source (if user input) ☐

Destination (if output) ☒ 4R01/02.04

Data Elements Contained

Data Element Name	Reference

Remarks:

INPUT/OUTPUT DATA DESCRIPTION

☐ Input Name	Revised Installation URR	OP CODE	3R01/02.09
☒ Output Name	Summary Data	FLOW CHART REF	3R01/02.09.T.7

Description:

Same as 2R01/02.10.T.5

Source (if user input) ☐

Destination (if output) ☒ 4R01/02.04

Data Elements Contained

Data Element Name	Reference

Remarks:

INPUT/OUTPUT DATA DESCRIPTION

☐ Input Name ☒ Output Name	Revised Installation URR Detail Data	OP CODE	3R01/02.09
		FLOW CHART REF	3R01/02.09.T.8

Description:

Same as 2R01/02.10.T.6

Source (if user input) ☐

Destination (if output) ☒ 4R01/02.04

Data Elements Contained

Data Element Name	Reference

Remarks:

INPUT/OUTPUT DATA DESCRIPTION

☐ Input Name	Revised Installation	OP CODE	3R01/02.09
☒ Output Name	URR Project List	FLOW CHART REF	3R01/02.09.T.9

Description:

A corrected list of each installation's project requirements by user/program element/program, priority, and type of work.

Source (if user input) ☐

Destination (if output) ☒ 4R01/02.02
4R01/02.04

Data Elements Contained

Data Element Name	Reference
Priority class Narrative title Installation code Facility number Facility component Unit of measure Number of units User/program element/program Total $ required Type of work	1. Appendix B 2. URR report format

Remarks:

REPORT DESCRIPTION - PART A

Report Name:	FLOW CHART REF	3R01/02.09 . R 1-3
MAFC URR Reports		

Description:

See 3R01/02.09.T.1-3

3R01/02.09.T.1	MAFC URR consolidation data
3R01/02.09.T.2	MAFC URR summary data
3R01/02.09.T.3	MAFC URR project list

Estimated Number of Pages:

50

Suggested Frequency:

Annual

Trigger(s) for Report Production:

URR guidance

Required Response Time:

45 working days from installation to HQ DA

Selection and Summarization Options:

OPERATION LOGIC

Operation Name:

Prepare URR Guidance

CODE: 4R01/02.01

The RPMAO prepares URR72 guidance after January 1970, when the President submits the budget for 1971 to Congress. The URR guidance is based on the 1971 budget submission guidance from OSD, OSA, and the DA staff, guidance from program directors, and FURR71 guidance that has just been prepared and sent to MAFC's. It contains guidelines to be followed in the preparation of the 1972 URR and can address any of the data elements listed in the input/output form for URR guidance.

INPUT/OUTPUT DATA DESCRIPTION

☒ Input Name	$FURR_{71}$ Guidance	OP CODE	4R01/02.01
☐ Output Name		FLOW CHART REF	4R01/02.01.T.1

Description:

Previous guidance prepared by the RPMAO that addresses the preparation of the 1971 FURR. It addresses any of the data elements contained in the FURR.

Source (if user input) ☒ 4R03.01.T.1

Destination (if output) ☐

Data Elements Contained

Data Element Name	Reference
Same as 4R03.01.T.1	

Remarks:

INPUT/OUTPUT DATA DESCRIPTION

☒ Input Name	President's Budget$_{71}$	OP CODE	4R01/02.01
☐ Output Name		FLOW CHART REF	4R01/02.01.T.2

Description:

The President's annual budget submitted to Congress in January each year for the fiscal year beginning on 1 July.

Source (if user input) ☐

Destination (if output) ☐

Data Elements Contained

Data Element Name	Reference
Appropriation User/program element/program OMA subappropriation FHMA subappropriation RDT&E subappropriation	Appendix B

Remarks:

INPUT/OUTPUT DATA DESCRIPTION

☒ Input Name ☐ Output Name	Program Directors' Guidance	OP CODE	4R01/02.01
		FLOW CHART REF	4R01/02.01.T.3

Description:

Primarily dollar guidance related to RPMA. Used by the RPMAO in preparing URR guidance.

Source (if user input) ☐

Destination (if output) ☐

Data Elements Contained

Data Element Name	Reference
Priority class Functional category Appropriation User/program element/program Status of financing Financing type Reimbursing agency OMA subappropriation FHMA subappropriation	Appendix B

Remarks:

INPUT/OUTPUT DATA DESCRIPTION

[x] Input Name [ ] Output Name	OSD, OSA, DA Staff Guidance	OP CODE	4R01/02.01
		FLOW CHART REF	4R01/02.01.T.4

Description:

This guidance is either financial or functional in nature, depending on which office originates it. In addition to dollar guidance, it contains broad guidelines on priorities, MRPF floor, IBP policies, etc.

Source (if user input) [ ]

Destination (if output) [ ]

Data Elements Contained

Data Element Name	Reference
Priority class Object class Elements of expense Functional category Funded cost Unfunded cost Appropriation FC^4 Financing type	Appendix B

Remarks:

INPUT/OUTPUT DATA DESCRIPTION

☐ Input Name	OP CODE	4R01/02.01
☒ Output Name URR_{72} Guidance	FLOW CHART REF	4R01/02.01.T.5

Description:

URR_{72} guidance is prepared by the RPMAO and sent to MAFC's for review and further amplification. It addresses the preparation of the 1972 URR by installations and addresses any of the data elements listed below.

Source (if user input) ☐

Destination (if output) ☒

3R01/02.01
3R01/02.02
3R01/02.03

Data Elements Contained

Data Element Name		Reference
Priority class	Labor $ required	
Functional category	Material and supplies $ required	
Appropriation	Equipment acquisition $ required	
Status of facility	Total $ required	
Condition rating	Dollars earned	
Facility component	Per capita usage	
FC^4	Equipment type	
User/program element/program	Kind of installation	
Work accomplishment		
Financing type		
OMA subappropriation		
FHMA subappropriation		
RDT&E subappropriation		
Contract $ required		

Remarks:

OPERATION LOGIC

Operation Name:

Examine Each URR Project and Requirement

CODE: 4R01/02.02

Same as 2R01/02.02, but considerably less detailed an examination of the requirements other than projects, since the requirements are consolidated. The projects would receive a thorough examination.

Inputs Described Elsewhere

3R01/02.09.T.1	MAFC URR consolidation data
3R01/02.09.T.2	MAFC URR summary data
3R01/02.09.T.3	MAFC URR project list
3R01/02.09.T.4	Revised MSC URR consolidation data
3R01/02.09.T.5	Revised MSC URR project list
3R01/02.09.T.9	Revised installation URR project list
4R01/02.03.T.1	URR_{71-75}
4R03.04.T.1	$FURR_{71}$
4R04.04.T.1	$MYRR_{70}$
4R03.12.T.1	$SAWP_{70}$
4R05.01/02.T.1	$PYPR_{69}$

INPUT/OUTPUT DATA DESCRIPTION

[x] Input Name [ ] Output Name	Program and Budget Guidance	OP CODE	4R01/02.02
		FLOW CHART REF	4R01/02.02.T.1

Description:

Contains dollar guidance for preparing command budgets and for reprogramming activities. Prepared by the COA.

Source (if user input) [ ]

Destination (if output) [ ]

Data Elements Contained

Data Element Name	Reference
Same as 2R01/02.01.T.2	

Remarks:

OPERATION LOGIC

Operation Name:
Reconcile Changes With MAFC(s) Involved

CODE: 4R01/02.03

Same as 2R01/02.04.

INPUT/OUTPUT DATA DESCRIPTION

☐ Input Name	OP CODE	4R01/02.03
☒ Output Name Corrected URR	FLOW CHART REF	4R01/02.03.T.1

Description:

Corrected version of RPMA functional management document as previously described. OCE sends to RPMAO the changes in the URR as received from MAFC's.

Source (if user input) ☐

Destination (if output) ☒ 4R01/02.05

Data Elements Contained

Data Element Name	Reference
Same as 3R01/02.09.T.1-5	

Remarks:

OPERATION LOGIC

Operation Name:

Begin Preparation of RPMA Planning Data

CODE: 4R01/02.04

RPMA planning and programming data are based, in part, on the requirements for the target year and beyond, expressed in the URR and modified by review and analysis at successively higher echelons through OCE and the RPMAO. The RPMAO starts preparing the planning data, including the unconstrained requirements estimate (URE), before all changes have been received from OCE.

Inputs Described Elsewhere

3R01/02.09.T.1	MAFC URR consolidation data
3R01/02.09.T.2	MAFC URR summary data
3R01/02.09.T.3	MAFC URR project list
3R01/02.09.T.4	Revised MSC URR consolidation data
3R01/02.09.T.5	Revised MSC URR project list
3R01/02.09.T.6	Revised installation URR consolidation data
3R01/02.09.T.7	Revised installation URR summary data
3R01/02.09.T.8	Revised installation URR detail data
3R01/02.09.T.9	Revised installation URR project list
4R01/02.04.T.1	Program and budget guidance (see 4R01/02.02.T.1)
4R01/02.03.T.1	URR_{71-75}
4R01/02.05.T.1	URR_{71-75}
4R03.04.T.1	$FURR_{71}$
4R03.09.T.1	$FURR_{71}$
4R04.04.T.1	$MYRR_{70}$
4R04.08.T.1	$MYRR_{70}$
4R03.12.T.1	$SAWP_{70}$
4R03.15.T.1	$SAWP_{70}$
4R05.01/02.T.1	$PYPR_{69}$

OPERATION LOGIC

Operation Name:
Incorporate OCE Changes

CODE: 4R01/02.05

The RPMAO analysts use the OCE input (analyses and changes to the URR) in preparing the RPMA planning and programming data for use at HQ DA. The OCE input is a marked-up copy of the URR accompanied by a narrative analysis of its changes.

Inputs Described Elsewhere

4R01/02.03.T.1 Corrected URR

INPUT/OUTPUT DATA DESCRIPTION

☐ Input Name		OP CODE	4R01/02.05
☒ Output Name	RPMA URR Summary	FLOW CHART REF	4R01/02.05.T.1

Description:

Statement of RPMA unconstrained requirements by user/program element/program and functional category.

Source (if user input) ☐

Destination (if output) ☒ 4R02.07

Data Elements Contained

Data Element Name	Reference
Appropriation Functional category User/program element/program OMA subappropriation FHMA subappropriation RDT&E subappropriation Total $ required	Appendix B

Remarks:

OPERATION LOGIC

Operation Name:

Complete the Preparation of RPMA Planning Data

CODE: 4 R 0 1 . 0 6

Once OCE changes to the URR have been received, the RPMAO finishes preparing RPMA planning data, incorporating other available data--for example, on future missions.

INPUT/OUTPUT DATA DESCRIPTION

☒ Input Name	Planning Guidance	OP CODE	4 R 0 1 . 0 6
☐ Output Name		FLOW CHART REF	4 R 0 1 . 0 6 . T _ _ . 1

Description:

Broad guidance for the planning function from OSD, OSA, and COA program directors that may address the data elements listed below.

Source (if user input) ☐

Destination (if output) ☐

Data Elements Contained

Data Element Name	Reference
Priority class Functional category Object class Elements of expense Appropriation Condition rating FC^4 Financing type Reimbursing agency OMA subappropriation FHMA subappropriation RDT&E subappropriation	Appendix B

Remarks:

OPERATION LOGIC

Operation Name:
Prepare Unconstrained Requirements Estimate (URE) for JSOP, ASOP, and AFDP

CODE: 4 R 0 1 . 0 7

The RPMAO prepares the unconstrained requirements estimate (URE) that addresses the outyears included in the URR. The URE is a summarized form of the URR; an accompanying narrative sets forth the rationale for adequate RPMA funding for the outyears. The URE is furnished to DA staff planners and analysts within OSD as the Army-wide RPMA input for inclusion in ASOP, JSOP, and AFDP.

Input Described Elsewhere

4R01.07.T.1 Planning guidance (see 4R01.06.T.1)

INPUT/OUTPUT DATA DESCRIPTION

☐ Input Name	RPMA Planning	OP CODE	4 R 0 1 0 7
☒ Output Name	Data$_{73-76}$	FLOW CHART REF	4 R 0 1 0 7 T 2

Description:

The planning data constitute a summarized form of the URR. An accompanying narrative sets forth the rationale for adequate RPMA funding for the outyears.

Source (if user input) ☐

Destination (if output) ☐

Data Elements Contained

Data Element Name	Reference
Priority class Functional category Object class Elements of expense Appropriation Condition rating FC[4] Financing type Reimbursing agency OMA subappropriation FHMA subappropriation RDT&E subappropriation	Appendix B

Remarks:

OPERATION LOGIC

Operation Name:
Prepare RPMA Functional Guidance and Input to June PBG72

CODE: 4 R 0 2 . 0 6

The RPMAO uses the URR to develop the RPMA input to the June PBG issued by the COA (see PRC R-1209, Vol. II, Part 1, page IV-17) and for developing functional guidance for RPMA management.

INPUT/OUTPUT DATA DESCRIPTION

☐ Input Name	$MYRR_{72}$ and Initial	OP CODE	4 R 0 2 . 0 6
☒ Output Name	URR_{73} Guidance	FLOW CHART REF	4 R 0 2 0 6 . T . 1

Description:

Guidance prepared by the RPMAO that addresses preparation of the 1972 MYRR and 1973 URR. It could address any of the data elements listed below.

Source (if user input) ☐

Destination (if output) ☐

Data Elements Contained

Data Element Name		Reference
Priority class	Contract $ required	
Functional category	Labor $ required	
Appropriation	Material and supplies $ required	
Status of facility	Equipment acquisition $ required	
Condition rating	Total $ required	
Facility component	Dollars earned	
FC^4	Per capita usage	
User/program element/ program	Equipment type	
W k accomplishment	Kind of installation	
Financing type		
OMA subappropriation		
FHMA subappropriation		
RDT&E subappropriation		

Remarks:

INPUT/OUTPUT DATA DESCRIPTION

☐ Input Name	RPMA Input for Program Guidance 72	OP CODE	4 R 0 2 . 0 6
☒ Output Name		FLOW CHART REF	4 R 0 2 . 0 6 . T . . . 2

Description:

RPMA input for program guidance addresses broad financial guidance for the RPMA. It is used in preparing budgets and reprogramming activities.

Source (if user input) ☐

Destination (if output) ☐

Data Elements Contained

Data Element Name	Reference
Functional category Funded cost Unfunded cost Appropriation User/program element/program Status of financing Financing type OMA subappropriation FHMA subappropriation RDT&E subappropriation	Appendix B

Remarks:

OPERATION LOGIC

Operation Name:
Develop RPMA Requirement for Staff Developed Budget Estimate

CODE: 4R02.07

The URR is summarized by the RPMAO and provided, with appropriate narrative, to the program directors for consideration of RPMA requirements in developing the Army budget estimate then under consideration.

Input Described Elsewhere

4R01/02.05.T.1 RPMA URR summary

INPUT/OUTPUT DATA DESCRIPTION

☐ Input Name	RPMA Program Requirements	OP CODE	4 R 0 2 0 7
☒ Output Name		FLOW CHART REF	4 R 0 2 0 7 T 1

Description:

RPMA program requirements are in a summarized form of the URR by program/program element. An accompanying narrative sets forth the rationale for adequate RPMA funding.

Source (if user input) ☐

Destination (if output) ☐

Data Elements Contained

Data Element Name	Reference
Priority class Functional category Appropriation Condition rating FC[4] Financing type Reimbursing agency OMA subappropriation FHMA subappropriation RDT&E subappropriation	Appendix B

Remarks:

FUNCTION NARRATIVE (data flow through operations)

Function Name:

Budgeting

CODE: 1 R 0 3-4 R 0 3

The Army budgeting function for RPMA is composed of the many activities associated with budgeting at all command echelons. The RPMA uses existing reporting systems with a strengthened functional channel as the source for its budgetary data. Data flows from HQ DA down to installations and up to HQ DA from the installations.

RPMA budgetary data are generated as a result of the guidance issued by HQ DA based on the Army input to the President's budget. The installation input, modified and adjusted as necessary by the MSC and MAFC, provides HQ DA with the distribution of RPMA requirements that will be financed and RPMA requirements that remain unfinanced. The impact on the Army's facilities of unfinancing needed RPMA requirements is an integral part of the budget function reporting.

RPMA data furnished in the budgeting function also provides input from the RPMA area into the IFS data base.

The subsequent formats contain more details of the flow and inputs/outputs for this function.

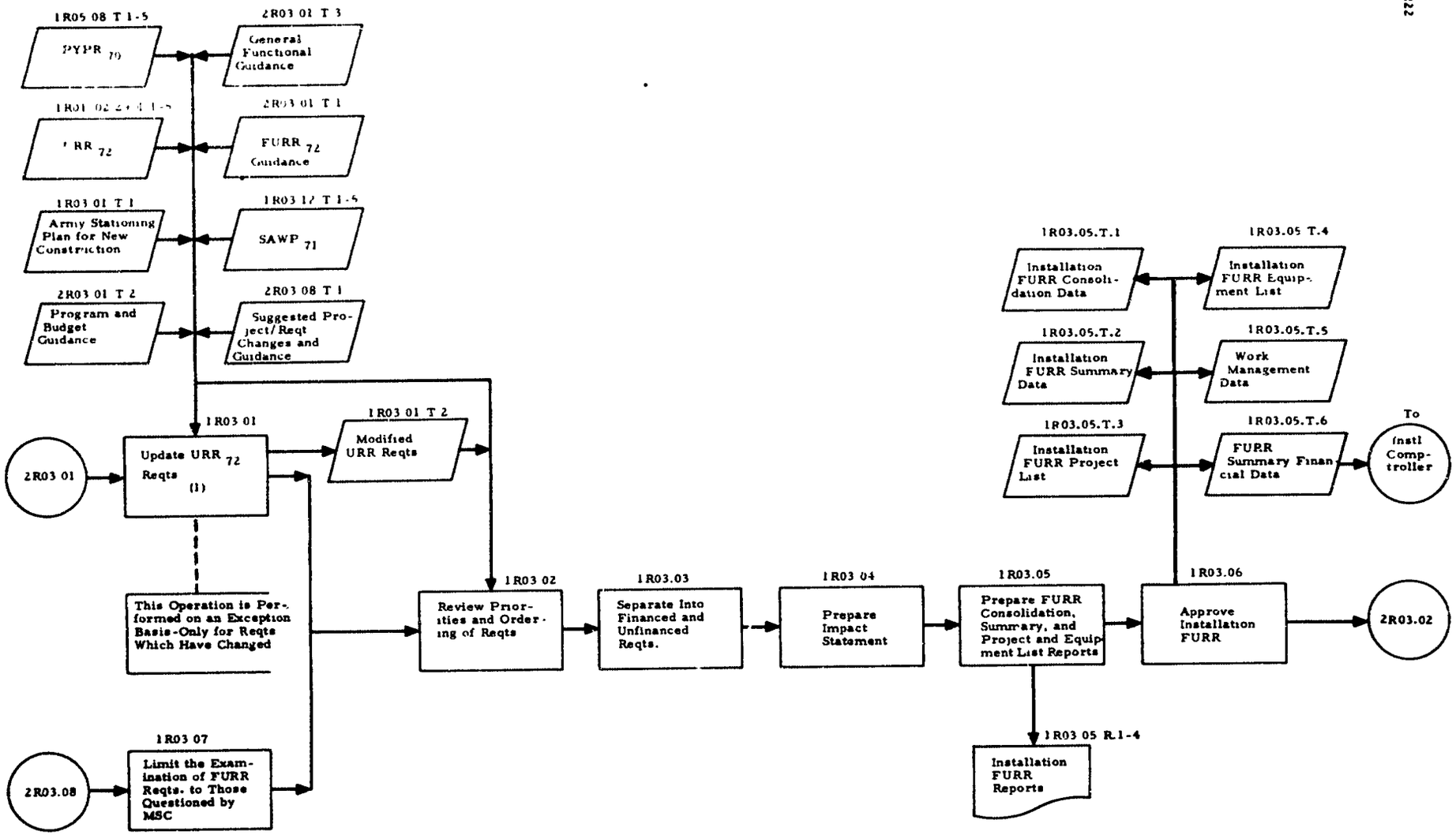

Note: Subscript denotes FY.
(Year of execution: FY72)
(1) Refer to the applicable operations described in planning and programming function.

RPMA BUDGETING FUNCTION
(INSTALLATION PREPARATION OF THE FURR)

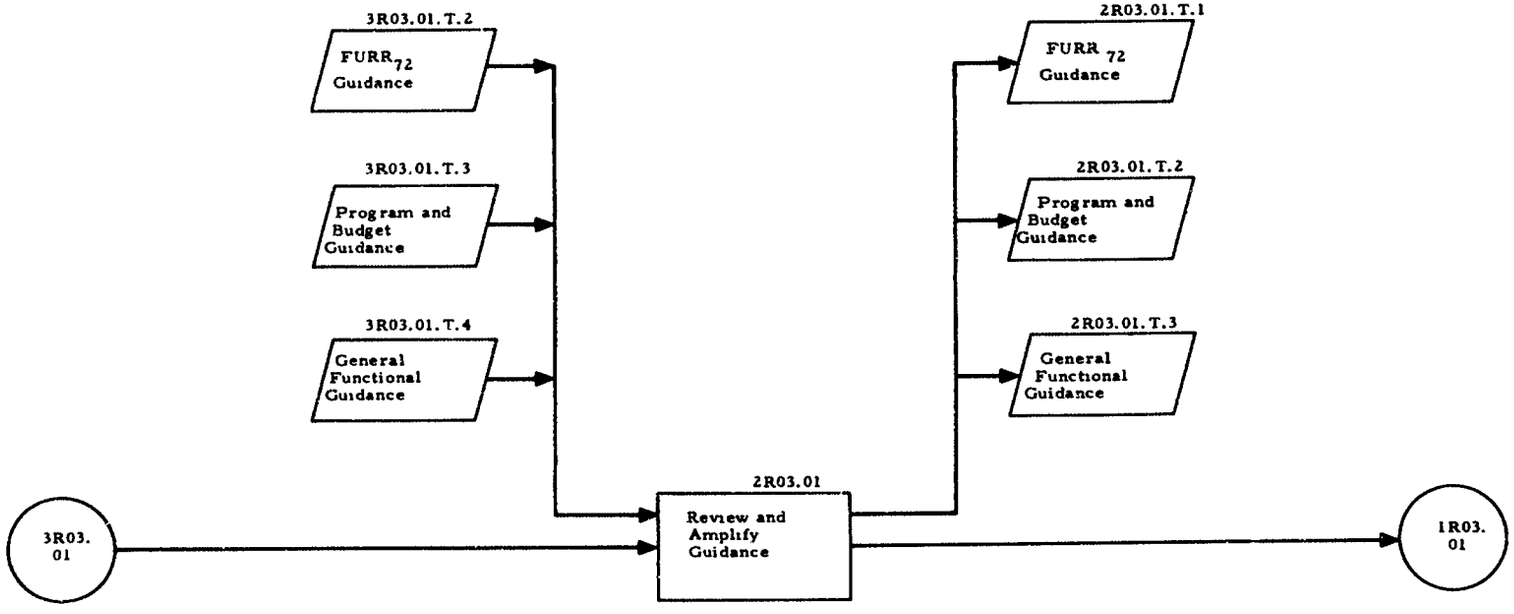

RPMA BUDGETING FUNCTION
(MSC PREPARATION OF THE FURR)

Note. Subscript denotes FY.
(Year of execution: FY72)

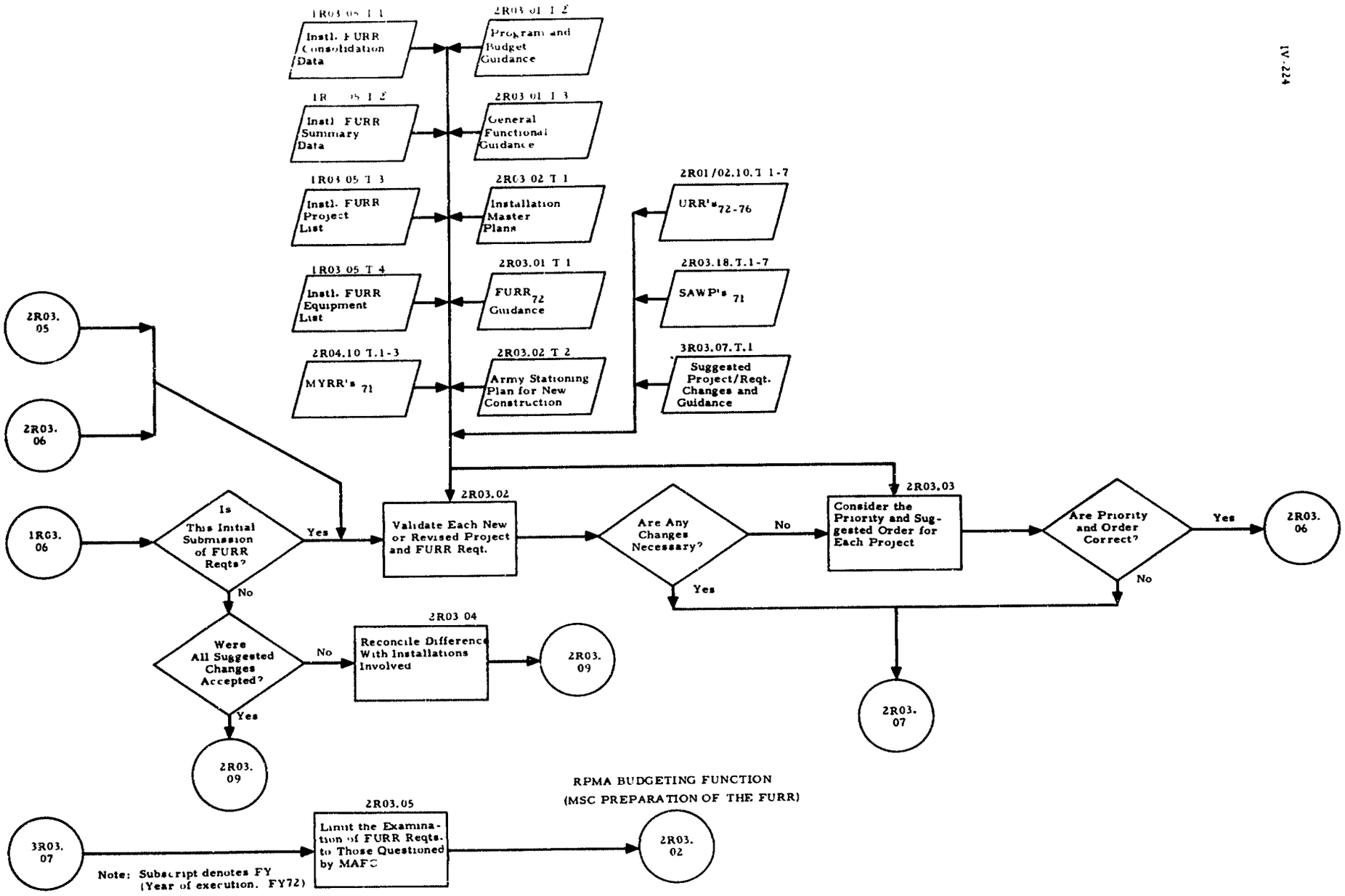
1R03.05.T.1
Instl. FURR Consolidation Data
2R03.01.T.2
Program and Budget Guidance
1R03.05.T.2
Instl. FURR Summary Data
2R03.01.T.3
General Functional Guidance
1R03.05.T.3
Instl. FURR Project List
2R03.02.T.1
Installation Master Plans
2R01/02.10.T.1-7
URR's 72-76
1R03.05.T.4
Instl. FURR Equipment List
2R03.01.T.1
FURR 72 Guidance
2R03.18.T.1-7
SAWP's 71
2R04.10.T.1-3
MYRR's 71
2R03.02.T.2
Army Stationing Plan for New Construction
3R03.07.T.1
Suggested Project/Reqt. Changes and Guidance
2R03.05
2R03.06
1R03.06
Is This Initial Submission of FURR Reqts?
Yes
No
2R03.02
Validate Each New or Revised Project and FURR Reqt.
Are Any Changes Necessary?
No
Yes
2R03.03
Consider the Priority and Suggested Order for Each Project
Are Priority and Order Correct?
Yes
No
2R03.06
2R03.07
Were All Suggested Changes Accepted?
No
Yes
2R03.04
Reconcile Differences With Installations Involved
2R03.09
2R03.09
RPMA BUDGETING FUNCTION
(MSC PREPARATION OF THE FURR)
3R03.07
2R03.05
Limit the Examination of FURR Reqts. to Those Questioned by MAFC
2R03.02
Note: Subscript denotes FY (Year of execution. FY72)

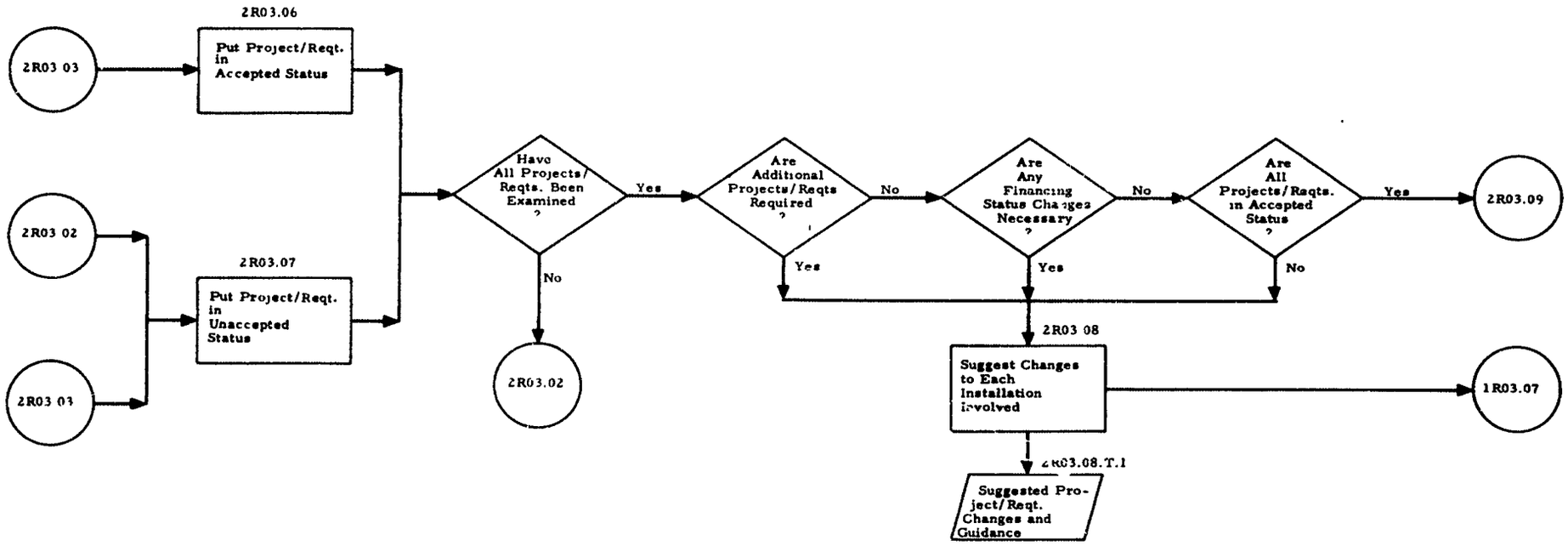

RPMA BUDGETING FUNCTION
(MSC PREPARATION OF THE FURR)

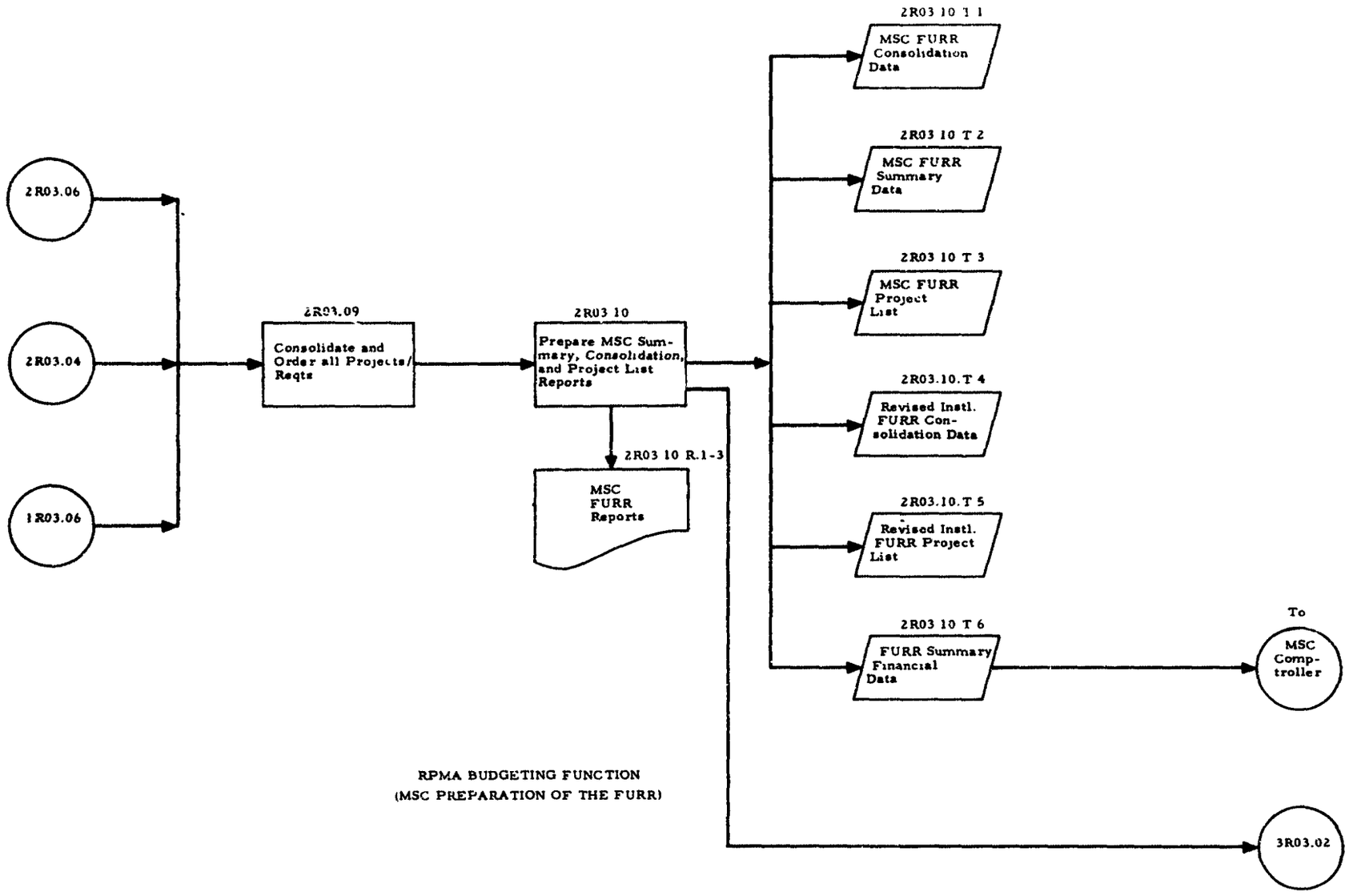

RPMA BUDGETING FUNCTION
(MSC PREPARATION OF THE FURR)

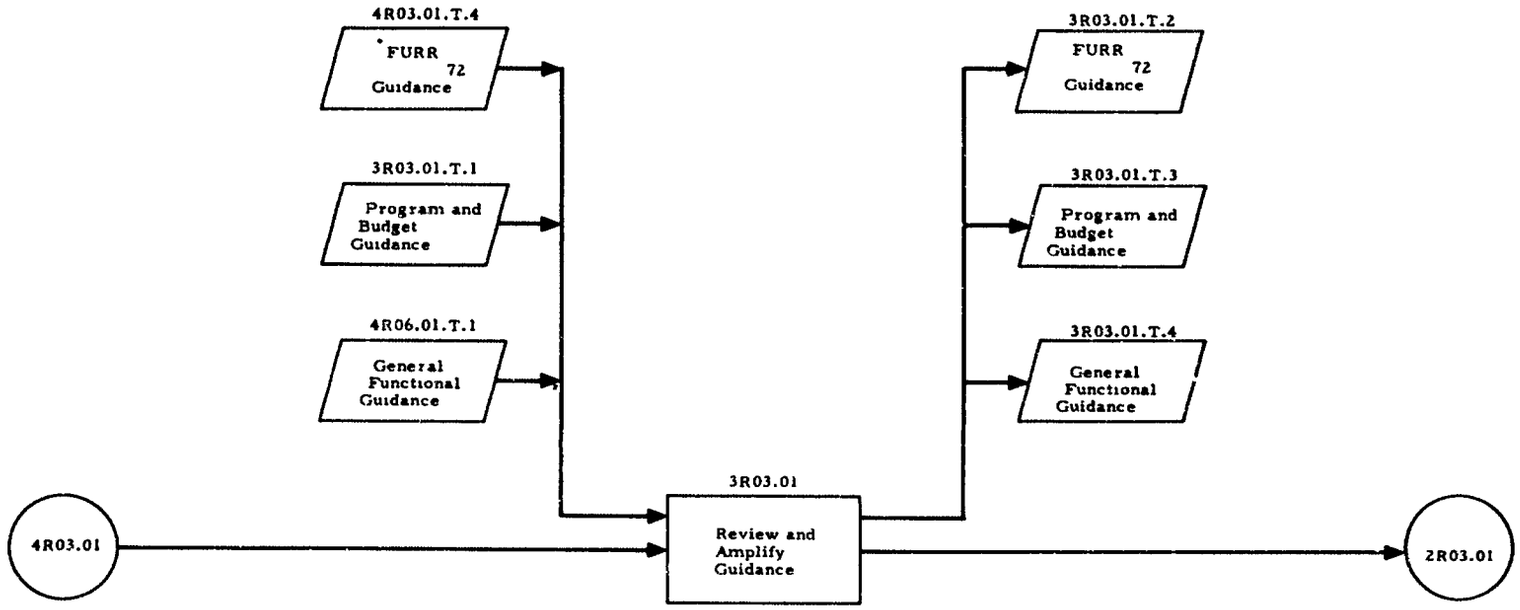

Note: Subscript denotes FY.
(Year of execution· FY72)

RPMA BUDGETING FUNCTION
(MAFC PREPARATION OF THE FURR)

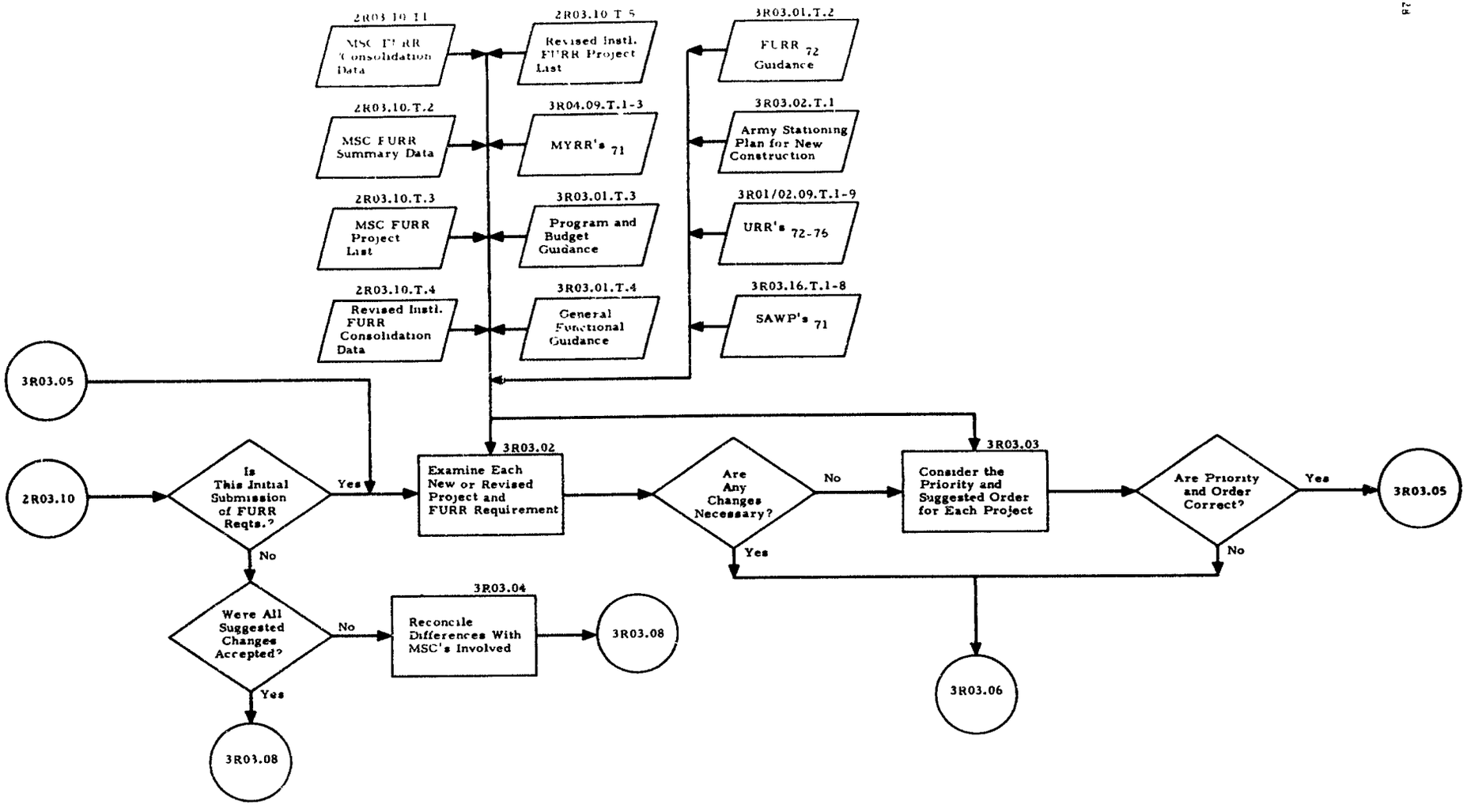

Note: Subscript denotes FY.
(Year of execution· FY72)

RPMA BUDGETING FUNCTION
(MAFC PREPARATION OF THE FURR)

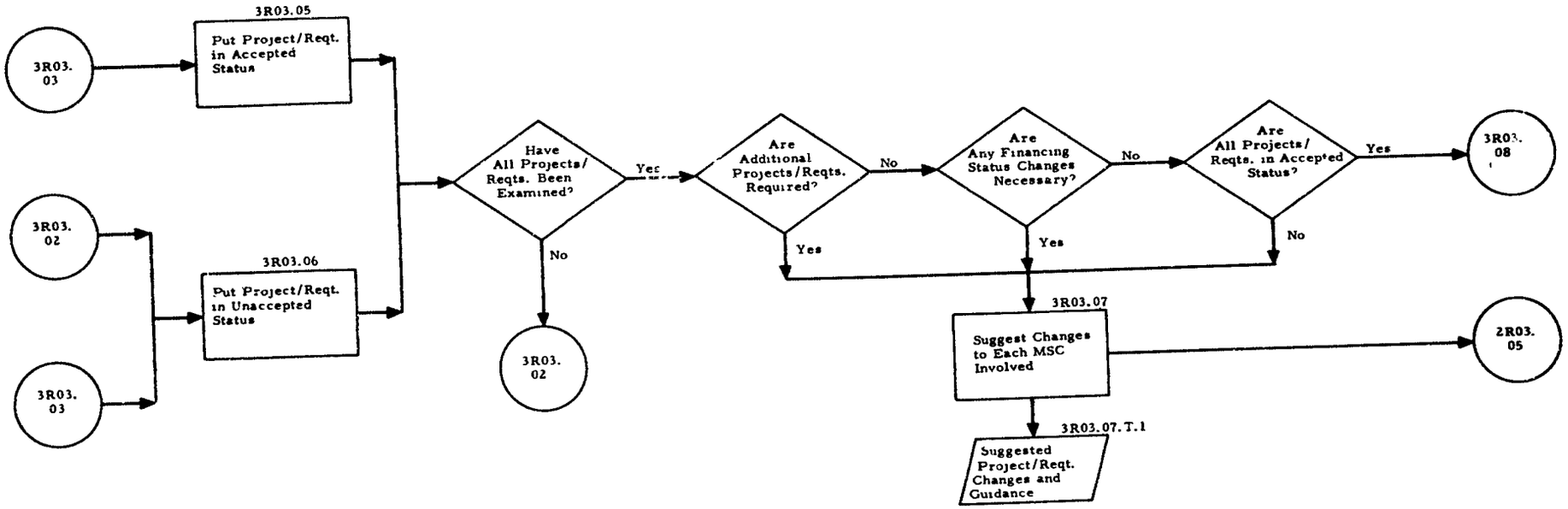

RPMA BUDGETING FUNCTION
(MAFC PREPARATION OF THE FURR)

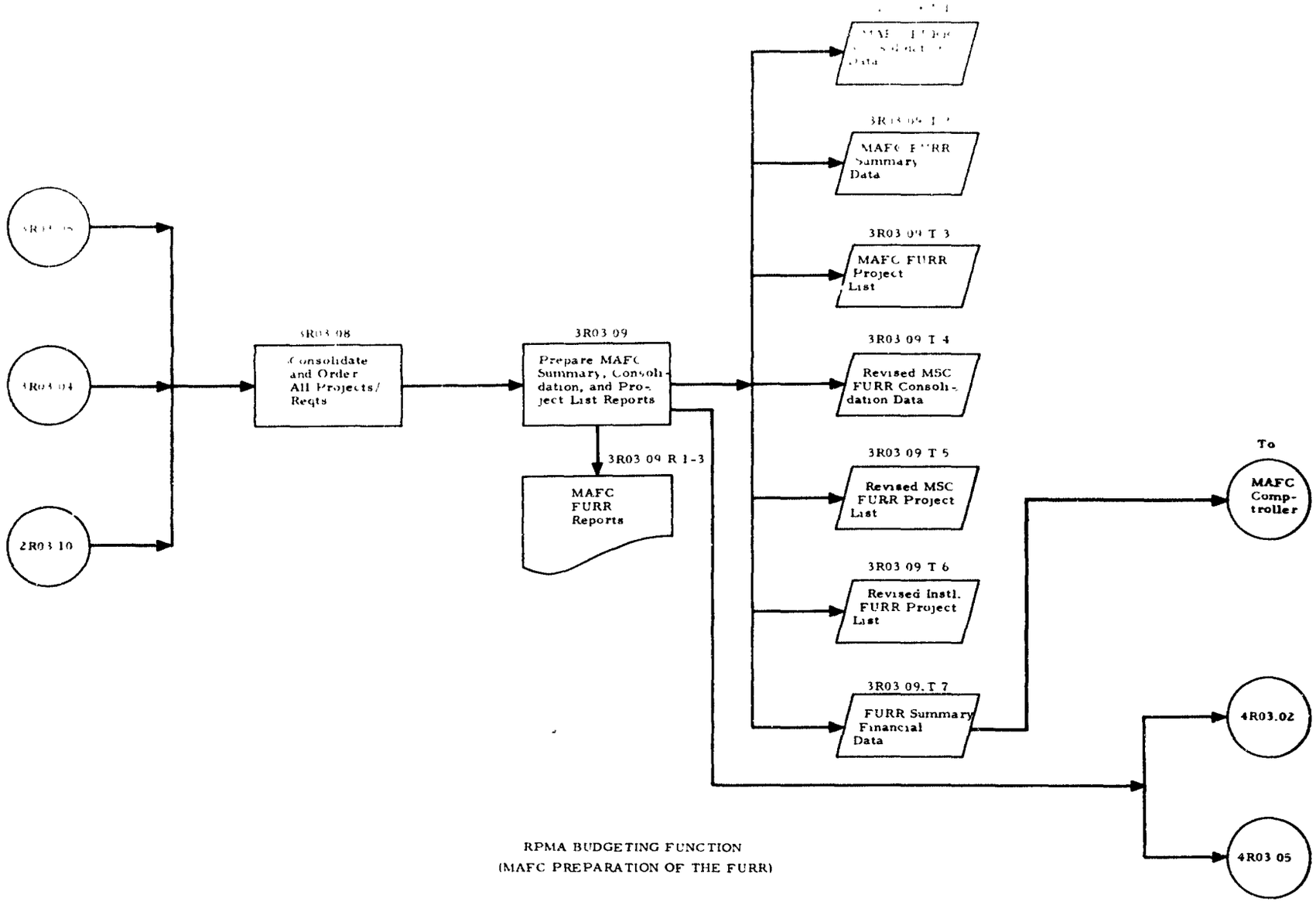

RPMA BUDGETING FUNCTION
(MAFC PREPARATION OF THE FURR)

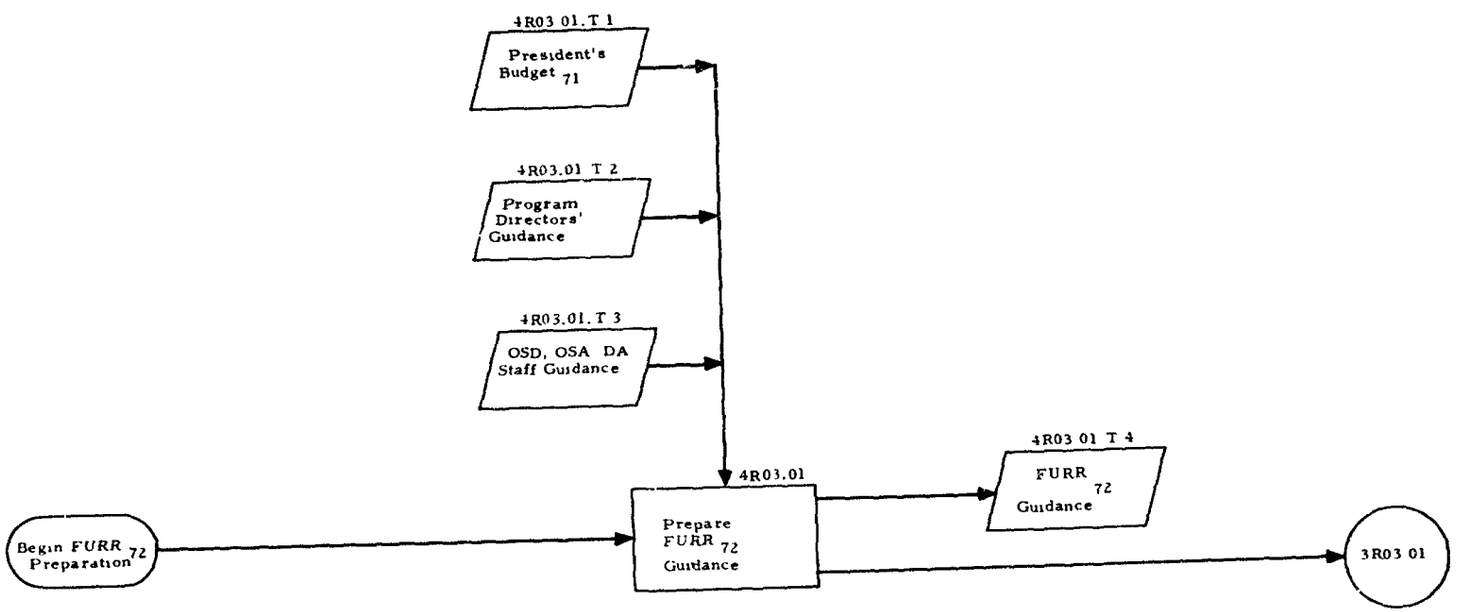

Note: Subscript (e.g., URR_{71}) denotes FY (Year of execution: FY72)

RPMA BUDGETING FUCTION
(RPMAO PROCESSING OF THE FURR)

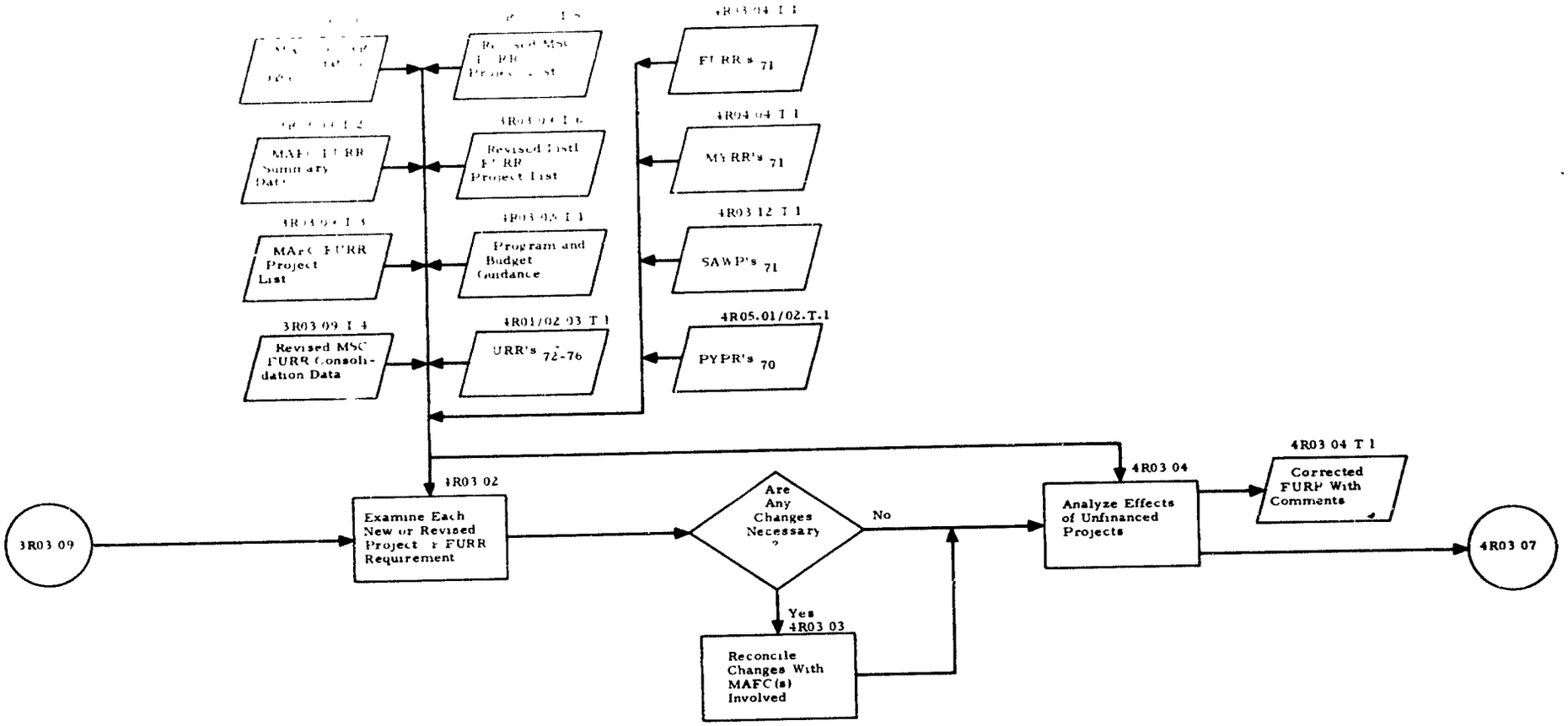

Note: Subscript (e.g., URR_{71}) denotes FY (Year of execution: FY72)

RPMA BUDGETING FUNCTION
(OCE PROCESSING OF THE FURR)

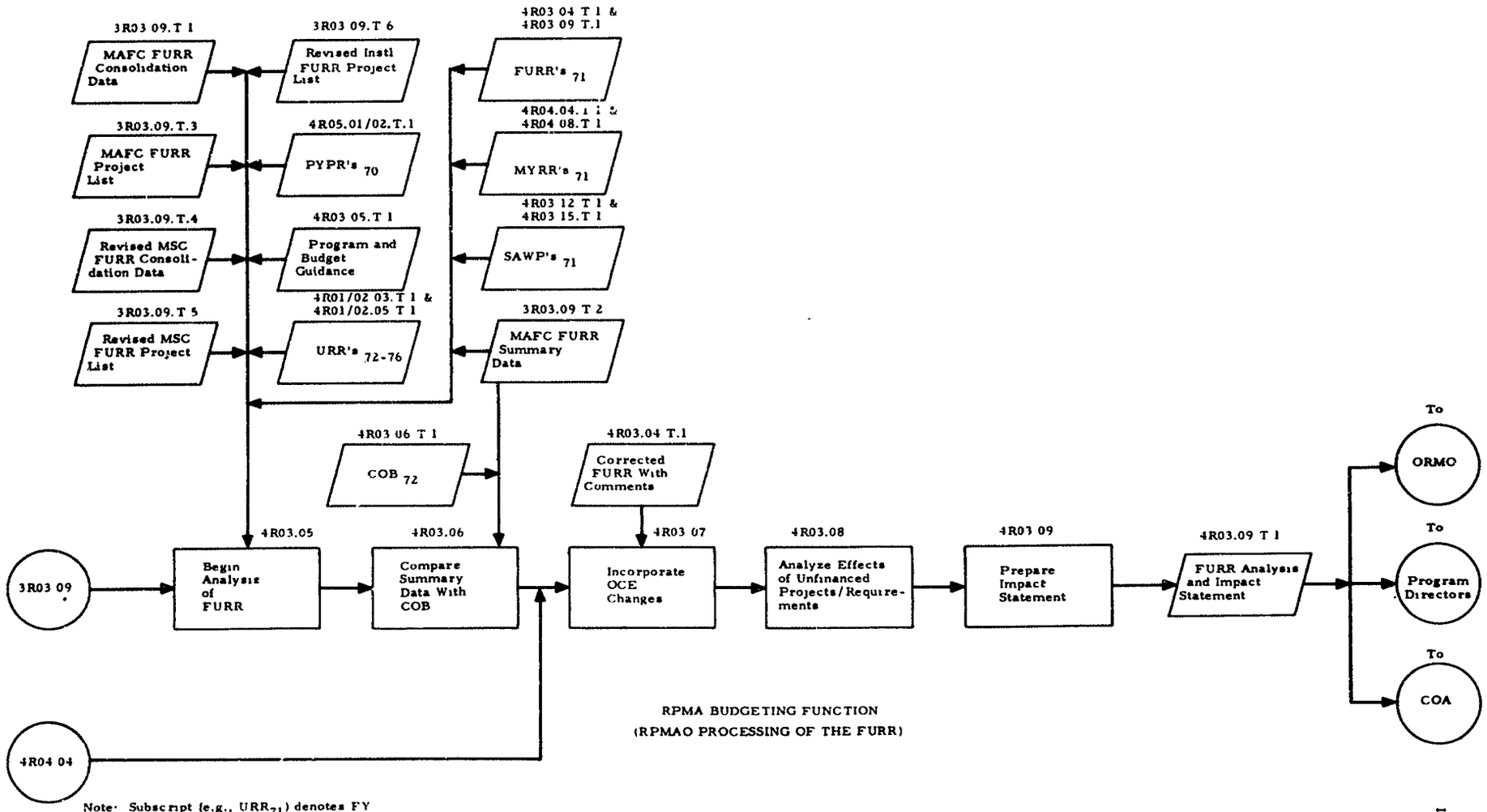

RPMA BUDGETING FUNCTION
(RPMAO PROCESSING OF THE FURR)

Note: Subscript (e.g., URR_{71}) denotes FY (Year of execution: FY72)

OPERATION LOGIC

Operation Name:

Update URR_{72} Requirements

CODE: 1 R 0 3 . 0 1

This operation is a recomputation and revalidation of the RPMA requirements expressed in the URR. The operations described in the planning/programming function to determine RPMA requirements are repeated with any new guidance and new requirements since the preparation of the URR used in recomputing RPMA requirements.

Inputs Described Elsewhere

1R01/02. 29. T. 1-5	URR_{72}
1R01/02.01.T.1	Installation URR consolidation data
1R05. 08. T. 1-5	$PYPR_{70}$
2R03. 01. T. 2	Program and budget guidance
2R03. 01. T. 3	General functional guidance
2R03. 01. T. 1	$FURR_{72}$ guidance
1R03. 12. T. 1-5	$SAWP_{71}$
2R03. 08. T. 1	Suggested project/requirement changes and guidance

Outputs Described Elsewhere

1R03. 01. T. 2	Modified URR requirements

INPUT/OUTPUT DATA DESCRIPTION

☒ Input Name	Army Stationing Plan for New Construction	OP CODE	1 R 0 3 . 0 1
☐ Output Name		FLOW CHART REF	1 R 0 3 . 0 1 . T . . 1

Description:

See New Construction Module Analysis and Design for the Integrated Facilities System, PRC R-1209, Vol. IV, Part 1, December 1969, p. III-3

Source (if user input) ☐

Destination (if output) ☐

Data Elements Contained

Data Element Name	Reference

Remarks:

INPUT/OUTPUT DATA DESCRIPTION

☒ Input Name ☐ Output Name	Suggested Project/ Requirement Changes and Guidance	OP CODE	1 R 0 3 . 0 1
		FLOW CHART REF	2 R 0 3 . 0 8 . T _ _ . 1

Description:

The reconciliation of differences and suggested changes to each installation involved as portrayed in 2R01/02.07.

Source (if user input) ☐

Destination (if output) ☐

Data Elements Contained

Data Element Name	Reference
Functional category Priority class Narrative title Narrative description Work accomplishment	

Remarks:

INPUT/OUTPUT DATA DESCRIPTION

☒ Input Name FURR72 Guidance	OP CODE	1 R 0 3 . 0 1
☐ Output Name	FLOW CHART REF	2 R 0 3 0 1 T . 1

Description:

FURR guidance is issued separately from the general functional guidance and addresses specifically the preparation of the FURR.

Source (if user input) ☐

Destination (if output) ☐

Data Elements Contained

Data Element Name		Reference
Priority class	RDT&E subappropriation	Appendix B
Narrative title	Condition rating	
Narrative description		
Functional category		
Appropriation		
Status		
FC^4		
User/program element/program		
Work accomplishment		
Financing type		
OMA subappropriation		
FHMA subappropriation		

Remarks:

INPUT/OUTPUT DATA DESCRIPTION

☐ Input Name	OP CODE	1 R 0 3 . 0 1
☒ Output Name Modified URR Requirements	FLOW CHART REF	1 R 0 3 . 0 1 . T 2

Description:

URR requirements are modified as necessary.

Source (if user input) ☐

Destination (if output) ☒ 1R03.02

Data Elements Contained

Data Element Name	Reference
See 1R01/02.29.T.1-5	

Remarks:

OPERATION LOGIC

Operation Name:
Review Priorities and Ordering of Requirements

CODE: 1 R 0 3 . 0 2

This requirement is twofold in that priorities must be reviewed within the context of those established for the installation in guidance received from HQ DA (RPMAO) and the interviewing echelons and those established in-house in drawing up a project list. The ordering of requirements is an important step in preparing the FURR, as it establishes the basis for the next operation.

Inputs Described Elsewhere

1R05.08.T.1-5	$PYPR_{70}$
2R03.01.T.2	Program and budget guidance
2R03.01.T.3	General functional guidance
2R03.01.T.1	$FURR_{72}$ guidance
1R03.12.T.1-5	$SAWP_{71}$
2R03.08.T.1	Suggested project/requirement change and guidance
1R03.01.T.2	Modified URR requirement

OPERATION LOGIC

Operation Name:
Separate Into Financed and Unfinanced Requirements

CODE: 1 R 0 3 . 0 3

On the basis of financed guidance received in the January PBG and the ordering of requirements by priority, RPMA requirements are separated into financed and unfinanced requirements. The unfinanced requirements form the basis for data presently provided for determining the backlog of essential maintenance and repair.

OPERATION LOGIC

Operation Name:

Prepare Impact Statement

CODE: 1R03.04

After separating RPMA requirements into financed and unfinanced, impact statements related to the unfinanced requirements are prepared. These impact statements enable MSC to more fully understand the end results of unfinancing some RPMA requirements. These statements are forwarded by the MSC to influence decisions at MAFC and HQ DA.

OPERATION LOGIC

Operation Name:
Prepare FURR Consolidation Summary, Project and Equipment List Reports

CODE: 1 R 0 3 . 0 5

The work coordinating center prepares the FURR summary that furnishes detailed data to the MSC and summarized financial data to the comptroller.

REPORT DESCRIPTION - PART A

Report Name:

Installation FURR Reports

FLOW CHART REF: 1 R 0 3 0 5 . R 1-4

Description:

See 1R01/02.29.T.1-5, which is composed of:

1R03.05.T.1	Installation FURR consolidation data
1R03.05.T.2	Installation FURR summary data
1R03.05.T.3	Installation FURR project list
1R03.05.T.4	Installation FURR equipment list

Estimated Number of Pages:

6

Suggested Frequency:

Annual

Trigger(s) for Report Production:

FURR guidance

Required Response Time:

45 working days from installation to HQ DA

Selection and Summarization Options:

OPERATION LOGIC

Operation Name:
Approve Installation FURR

CODE: 1 R 0 3 . 0 6

The FURR moves through command channels to HQ DA after it is forwarded to the installation commander for approval. This process is repeated at MSC and MAFC but will not be outlined again in subsequent flowcharts.

Outputs Described Elsewhere

1R03.05.T.1	Installation FURR consolidation data
1R03.05.T.2	Installation FURR summary data
1R03.05.T.3	Installation FURR project list
1R03.05.T.4	Installation FURR equipment list
1R03.05.T.6	FURR summary financial data

INPUT/OUTPUT DATA DESCRIPTION

☐ Input Name		OP CODE	1 R 0 3 . 0 6
☒ Output Name	Installation FURR Consolidation Data	FLOW CHART REF	1 R 0 3 . 0 5 . T . . 1

Description:

See FURR consolidation format.

Source (if user input) ☐

Destination (if output) ☒ 2R03.02

Data Elements Contained

Data Element Name		Reference
Functional category	Status of financing	
Priority class	Narrative title	
Installation code	Narrative description	
Command abbreviation		
Status		
Condition rating		
User/program element/program		
Contract $ required		
Labor $ required		
Material and supplies $ required		
Equipment acquisition $ required		
Total $ required		

Remarks:

INPUT/OUTPUT DATA DESCRIPTION

☐ Input Name		OP CODE	1 R 0 3 . 0 6
☒ Output Name	Installation FURR Summary Data	FLOW CHART REF	1 R 0 3 0 5 T 2

Description:

See FURR summary format

Source (if user input) ☐

Destination (if output) ☒ 2R03.02

Data Elements Contained

Data Element Name		Reference
Functional category Priority class Installation code Command abbreviation Status Condition rating User/program element/program Contract $ required Labor $ required Material and supplies $ required Equipment acquisition $ required	Total $ required Status of financing Narrative description Unit of measure Dollars earned Data type	FURR summary format

Remarks:

INPUT/OUTPUT DATA DESCRIPTION

☐ Input Name		OP CODE	1 R 0 3 . 0 6
☒ Output Name	Installation FURR Project List	FLOW CHART REF	1 R 0 3 . 0 5 . T . . . 3

Description:

See FURR project list format

Source (if user input) ☐

Destination (if output) ☒ 2R03.02

Data Elements Contained

Data Element Name	Reference
Functional category	
Status of financing	
User/program element/program	
Priority class	
Narrative title	
Narrative description	
Installation code	
Work accomplishment	

Remarks:

INPUT/OUTPUT DATA DESCRIPTION

☐ Input Name		OP CODE	1 R 0 3 . 0 6
☒ Output Name	Installation FURR Equipment List	FLOW CHART REF	1 R 0 3 . 0 5 . T . . . 4

Description:

See FURR equipment list format

Source (if user input) ☐

Destination (if output) ☒ 2R03.02

Data Elements Contained

Data Element Name	Reference
Functional category	
Status of financing	
User/program element/program	
Priority class	
Equipment type	
Installation code	

Remarks:

INPUT/OUTPUT DATA DESCRIPTION

☒ Input Name	Work Management Data	OP CODE	1 R 0 3 . 0 6
☐ Output Name		FLOW CHART REF	1 R 0 3 . 0 5 . T . . . 5

Description:

The work management data elements required during preparation of the FURR are listed below. Refer to the FURR to determine the context within which these elements are used.

Source (if user input) ☒ Work Management System

Destination (if output) ☐

Data Elements Contained

Data Element Name	Description or Reference
Condition rating	
Contract $ cost	
Contract $ required	
Data class	
Dollars earned	
Equipment acquisition $ cost	
Equipment acquisition $ required	
Equipment rental cost	
Equipment type	
Functional category	
Labor $ cost	
Labor $ required	
Material and supplies $ cost	

Remarks:

INPUT/OUTPUT DATA DESCRIPTION (Continued)

☒ Input Name Work Management Data	OP CODE	1R03.06
☐ Output Name	FLOW CHART REF	1R03.05.T___.5

Data Elements Contained

Data Element Name	Description or Reference
Material and supplies $ required	
Narrative title	
Number of units	
Priority class	
Status	
Status of financing	
Total $ cost	
Total $ required	
Type of work	
Unit cost	
Unit of measure	
User/program element/program	

INPUT/OUTPUT DATA DESCRIPTION

☐ Input Name		OP CODE	1 R 0 3 . 0 6
☒ Output Name	FURR Summary Financial Data	FLOW CHART REF	1 R 0 3 . 0 5 . T . . . 6

Description:

Provided to comptroller for input to the command operating budget at installation level.

Source (if user input) ☐

Destination (if output) ☒ Instl comptroller

Data Elements Contained

Data Element Name	Reference
Functional category	
Object class	
Elements of expense	
User/program element/program	

Remarks:

OPERATION LOGIC

Operation Name:

Limit the Examination of FURR Requirements to Those Questioned by MSC

CODE: 1 R 0 3 . 0 7

After sending the FURR to MSC, the MSC may request/suggest changes to the installation on the basis of MSC examination of the FURR. Installation response, which should be confined to those areas of the FURR questioned by the MSC, can be in the form of recomputing and revalidating a utility requirement, adding projects, or indicating a change in RPMA funding status.

OPERATION LOGIC

Operation Name:

Review and Amplify Guidance

CODE: 2 R 0 3 . 0 1

See 2R01/02.01

Inputs Described Elsewhere

3R03.01.T.2	$FURR_{72}$ guidance
3R03.01.T.3	Program and budget guidance
3R03.01.T.4	General functional guidance

Outputs Described Elsewhere

2R03.01.T.1	$FURR_{72}$ guidance
2R03.01.T.2	Program and budget guidance
2R03.01.T.3	General functional guidance

OPERATION LOGIC

Operation Name:
Validate Each New or Revised Project and FURR Requirement

CODE: 2 R 0 3 . 0 2

This validation operation is completed by the elements of the MSC staff engineer concerned with inputs to the FURR. Each new or revised project and FURR requirement is examined to determine the validity of these RPMA requirements. Only changes to the URR are examined, as the validation operation is completed by the MSC for the URR. Projects and other requirements are validated on the bases of projected mission changes (whose facilities impact should be taken into account), previous unit costs, and the professional experience and judgment of MSC engineer personnel as related to the MSC RPMA requirements. Questions and suggested changes are identified in completing this validation operation.

Inputs Described Elsewhere

1R03.05.T.1	Installation FURR consolidation data
1R03.05.T.2	Installation FURR summary data
1R03.05.T.3	Installation FURR project list
1R03.05.T.4	Installation FURR equipment list
2R04.10.T.1-3	$MYRR_{71}$
2R03.01.T.2	Program and budget guidance
2R03.01.T.3	General functional guidance
2R03.02.T.1	Installation master plan
2R03.02.T.1	$FURR_{72}$ guidance
2R03.02.T.2	Army stationing plan for new construction
2R01.02.10.T.1-7	URR_{72-76}
2R03.18.T.1-7	$SAWP_{71}$
3R03.07.T.1	Suggested project/requirement changes and guidance

INPUT/OUTPUT DATA DESCRIPTION

☒ Input Name Installation Master Plan	OP CODE	2 R 0 3 . 0 2
☐ Output Name	FLOW CHART REF	2 R 0 3 . 0 2 . T . . . 1

Description:

Master plans for permanent Army installations are prepared as specified in AR 210-20.

Source (if user input) ☐

Destination (if output) ☐

Data Elements Contained

Data Element Name	Reference
	AR 210-20

Remarks:

OPERATION LOGIC

Operation Name:
Consider the Priority and Suggested Order for Each Project

CODE: 2 R 0 3 . 0 3

The MSC examines the priority of projects listed based on the input documents shown on the flowchart, the technical experience and judgment of staff engineer personnel, knowledge of command area activities and installations, and program mission changes with an impact in the RPMA area. Suggested changes in priority and ordering of projects are identified in this operation.

Inputs Described Elsewhere

1R03.05.T.1	Installation FURR consolidation data
1R03.05.T.2	Installation FURR summary data
1R03.05.T.3	Installation FURR project list
1R03.05.T.4	Installation FURR equipment list
2R04.10.T.1-3	MYRR71
2R03.01.T.2	Program and budget guidance
2R03.01.T.3	General functional guidance
2R03.02.T.1	Installation master plan
2R03.01.T.1	FURR72 guidance
2R03.02.T.2	Army stationing plan for new construction
2R01/02.10.T.1-7	URR72-76
2R03.18.T.1-7	SAWP71
3R03.07.T.1	Suggested project/requirement changes and guidance

OPERATION LOGIC

Operation Name:
Reconcile Differences With Installations Involved

CODE: 2 R 0 3 . 0 4

After differences are identified, the MSC reconciles any changes desired with the installation involved. This may be an informal process, by telephone, to reach agreement and resolve questions on the FURR submitted by the installation.

OPERATION LOGIC

Operation Name:
Limit the Examination of FURR Requirements to Those Questioned by MAFC

CODE: 2 R 0 3 . 0 5

This operation is similar to 1R03.06. In the case of the MSC, the response to MAFC is based on data available to the MSC. If additional data are required, MSC queries the installation involved to provide an adequate response to MAFC.

OPERATION LOGIC

Operation Name:

Put Project/Requirement in Accepted Status

CODE: 2R03.06

After examining the new FURR projects and other requirements on an exception basis to verify that the priorities and order of projects are correct and no other changes are necessary, they are placed in an accepted status.

OPERATION LOGIC

Operation Name:
Put Project/Requirement in Unaccepted Status

CODE: 2 R 0 3 . 0 7

Projects and requirements for which there are suggested changes or questions are placed in an unaccepted status.

OPERATION LOGIC

Operation Name:
Suggest Changes to Each Installation Involved

CODE: 2 R 0 3 . 0 8

For projects and requirements requiring additions, deletions, other modification, or further validation, the MSC suggests changes to each installation involved.

Output Described Elsewhere

2R03.08.T.1	Suggested project/requirement changes and guidance

OPERATION LOGIC

Operation Name:
Consolidate and Order All Projects/Requirements

CODE: 2 R 0 3 . 0 9

After all differences between MSC and the installations with regard to FURR projects and requirements have been reconciled, they are placed in an accepted status. After all projects and other requirements are in an accepted status, the MSC consolidates and orders all installation projects and requirements into a command-wide report.

OPERATION LOGIC

Operation Name:
Prepare MSC Summary, Consolidation, and Project List Reports

CODE: 2 R 0 3 . 1 0

The installation FURR's and the consolidated MSC projects and requirements by functional category are used by the MSC to prepare a summary of the consolidated MSC RPMA requirements.

The MSC forwards to MAFC, through command channels, the FURR summary and backup of the consolidated MSC requirements, both command-wide and by program or user. In addition, the installation summary FURR is forwarded along with a list of projects greater than $10,000, with lump sum totals for all others. The listed projects identify program element, priority, and functional category for each project.

Outputs Described Elsewhere

2R03.10.T.1	MSC FURR consolidation data
2R03.10.T.4	Revised installation FURR consolidation data
2R03.10.T.5	Revised installation FURR project list
2R03.10.T.6	FURR summary financial data
2R03.10.T.2	MSC FURR summary data
2R03.10.T.3	MSC FURR project list

INPUT/OUTPUT DATA DESCRIPTION

☐ Input Name		OP CODE	2 R 0 3 . 1 0
☒ Output Name	MSC FURR Consolidation Data	FLOW CHART REF	2 R 0 3 . 1 0 . T . . . 1

Description:

A consolidation by MSC of installation FURR consolidation data.
See FURR consolidation format.

Source (if user input) ☐

Destination (if output) ☒ 3R03.02

Data Elements Contained

Data Element Name	Reference
See 1R03.05.T.1	

Remarks:

INPUT/OUTPUT DATA DESCRIPTION

☐ Input Name		OP CODE	2 R 0 3 . 1 0
☒ Output Name	MSC FURR Summary Data	FLOW CHART REF	2 R 0 3 . 1 0 . T . 2

Description:

A consolidation of installation FURR summary data. See FURR summary format.

Source (if user input) ☐

Destination (if output) ☒ 3R03.02

Data Elements Contained

Data Element Name	Reference
See 1R03.05.T.2	

Remarks:

INPUT/OUTPUT DATA DESCRIPTION

☐ Input Name ☒ Output Name	MSC FURR Project List	OP CODE	2 R 0 3 . 1 0
		FLOW CHART REF	2 R 0 3 . 1 0 . T . . . 3

Description:

An ordering of all projects by MSC as described in 2R03.09.
See FURR project list format.

Source (if user input) ☐

Destination (if output) ☒ 3R03.02

Data Elements Contained

Data Element Name	Reference
See 1R03.05.T.3	

Remarks:

INPUT/OUTPUT DATA DESCRIPTION

☐ Input Name ☒ Output Name	Revised Installation FURR Consolidation Data	OP CODE	2 R 0 3 . 1 0
		FLOW CHART REF	2 R 0 3 . 1 0 . T . . . 4

Description:

Installation consolidation data revised as described in 2R03.03, 2R03.04, and 2R03.08

Source (if user input) ☐

Destination (if output) ☒ 3R03.02

Data Elements Contained

Data Element Name	Reference
See 1R03.05.T.1	

Remarks:

INPUT/OUTPUT DATA DESCRIPTION

☐ Input Name	Revised Installation	OP CODE	2 R 0 3 . 1 0
☒ Output Name	FURR Project List	FLOW CHART REF	2 R 0 3 1 0 . T . . . 5

Description:

Revised as described in 2R03.06 and 2R03.07.

Source (if user input) ☐

Destination (if output) ☒ 3R03.02

Data Elements Contained

Data Element Name	Reference
See 1R03.05.T.3	

Remarks:

INPUT/OUTPUT DATA DESCRIPTION

☐ Input Name ☒ Output Name	FURR Summary Financial Data	OP CODE	2 R 0 3 . 1 0
		FLOW CHART REF	2 R 0 3 1 0 . T . . 6

Description:

Provided to comptroller for input to MSC COB.

Source (if user input) ☐

Destination (if output) ☒ MSC comptroller

Data Elements Contained

Data Element Name	Reference
See 1R03.05.T.6	

Remarks:

REPORT DESCRIPTION - PART A

Report Name:

MSC FURR Reports

FLOW CHART REF: 2 R 0 3 1 0 . R 1-3

Description:

See 2R03.10.T.1-3

Estimated Number of Pages:

12

Suggested Frequency:

Annual

Trigger(s) for Report Production:

Receipt of installation FURR
FURR guidance

Required Response Time:

45 working days from installation to HQ DA

Selection and Summarization Options:

OPERATION LOGIC

Operation Name:
Review and Amplify Guidance

CODE: 3R03.01

See 3R01/02.01.

Inputs Described Elsewhere

4R03.01.T.4	$FURR_{72}$ guidance
3R03.01.T.1	Program and budget guidance
4R06.01.T.1	General functional guidance

Outputs Described Elsewhere

3R03.01.T.2	$FURR_{72}$ guidance
3R03.01.T.3	Program and budget guidance
3R03.01.T.4	General functional guidance

OPERATION LOGIC

Operation Name:
Examine Each New or Revised Project and FURR Requirement

CODE: 3 R 0 3 . 0 2

See 2R03.01

This operation at MAFC is similar to that completed at MSC and involves the same processes.

	Inputs Described Elsewhere
2R03.10.T.1	MSC FURR consolidation data
2R03.10.T.2	MSC FURR summary data
2R03.10.T.3	MSC FURR project list
2R03.10.T.4	Revised installation FURR consolidation data
2R03.10.T.5	Revised installation FURR project list
3R04.09.T.1-3	MYRR71
3R03.01.T.3	Program and budget guidance
3R03.01.T.4	General functional guidance
3R03.01.T.2	FURR72 guidance
3R03.01.T.1	Army stationing plan for new construction
3R03.09.T.1-9	URR72-76
3R03.16.T.1-8	SAWP71

OPERATION LOGIC

Operation Name:
Consider the Priority and Suggested Order for Each Project

CODE: 3 R 0 3 . 0 3

See 2R03.02.

Inputs Described Elsewhere

2R03.10.T.1	MSC FURR consolidation data
2R03.10.T.2	MSC FURR summary data
2R03.10.T.3	MSC FURR project list
2R03.10.T.4	Revised installation FURR consolidation data
2R03.10.T.5	Revised installation FURR project list
3R04.09.T.1-3	$MYRR_{71}$
3R03.01.T.3	Program and budget guidance
3R03.01.T.4	General functional guidance
3R03.01.T.2	$FURR_{72}$ guidance
3R03.01.T.1	Army stationing plan for new construction
3R03.09.T.1-9	URR_{72-76}
3R03.16.T.1-8	$SAWP_{71}$

OPERATION LOGIC

Operation Name:
Reconcile Differences With MSC's Involved

CODE: 3 R 0 3 . 0 4

See 2R03.03.

OPERATION LOGIC

Operation Name:
Put Project/Requirements in Accepted Status

CODE: 3R03.05

See 2R03.05.

OPERATION LOGIC

Operation Name:
Put Project/Requirement in Unaccepted Status

CODE: 3 R 0 3 . 0 6

See 2R03.06.

OPERATION LOGIC

Operation Name:
Suggest Changes to Each MSC Involved

CODE: 3 R 0 3 . 0 7

See 2R03.07.

Output Described Elsewhere

3R03.07.T.1	Suggested project/requirement changes and guidance

INPUT/OUTPUT DATA DESCRIPTION

☐ Input Name ☒ Output Name	Suggested Project/ Requirement Changes and Guidance	OP CODE	3R03.07
		FLOW CHART REF	3R03.07.T.1

Description:

The reconciliation of differences and suggested changes to each MSC involved as portrayed in operation 3R01/02.06.

Source (if user input) ☐

Destination (if output) ☒ 2R03.02

Data Elements Contained

Data Element Name	Reference
See 2R03.08.T.1	

Remarks:

OPERATION LOGIC

Operation Name:
Consolidate and Order All Projects/Requirements

CODE: 3R03.08

See 2R03.08.

OPERATION LOGIC

Operation Name:
Prepare MAFC Summary, Consolidation, Project List Reports

CODE: 3 R 0 3 . 0 9

See 2R03.09.

MAFC forwards the MAFC summary and supporting data as indicated in the flowchart.

Outputs Described Elsewhere

3R03.09.T.1	MAFC FURR consolidation data
3R03.09.T.4	Revised MSC FURR consolidation data
3R03.09.T.5	Revised MSC FURR project list
3R03.09.T.6	Revised installation FURR project list
3R03.09.T.7	FURR summary financial data
3R03.09.T.2	MAFC FURR summary data
3R03.09.T.3	MAFC FURR project list

INPUT/OUTPUT DATA DESCRIPTION

☐ Input Name		OP CODE	3 R 0 3 . 0 9
☒ Output Name	MAFC FURR Consolidation Data	FLOW CHART REF	3 R 0 3 . 0 9 . T . . 1

Description:

A consolidation by MAFC of MSC FURR consolidation data. See FURR consolidation format.

Source (if user input) ☐

Destination (if output) ☒ 4R03.02 4R03.05

Data Elements Contained

Data Element Name	Reference
See 1R03.05.T.1.	

Remarks:

INPUT/OUTPUT DATA DESCRIPTION

☐ Input Name		OP CODE	3 R 0 3 . 0 9
☒ Output Name	MAFC FURR Summary Data	FLOW CHART REF	3 R 0 3 . 0 9 . T . . 2

Description:

A consolidation of MSC summary data. See FURR summary format.

Source (if user input) ☐

Destination (if output) ☒ 4R03.02 4R03.05

Data Elements Contained

Data Element Name	Reference
See 1R03.05.T.2.	

Remarks:

INPUT/OUTPUT DATA DESCRIPTION

☐ Input Name ☒ Output Name	MAFC FURR Project List	OP CODE	3 R 0 3 . 0 9
		FLOW CHART REF	3 R 0 3 . 0 9 . T . . . 3

Description:

An ordering of all projects by MAFC as described in 3R03.08. See FURR project list format.

Source (if user input) ☐

Destination (if output) ☒ 4R03.02 4R03.05

Data Elements Contained

Data Element Name	Reference
See 1R03.05.T.3.	

Remarks:

INPUT/OUTPUT DATA DESCRIPTION

☐ Input Name	Revised MSC FURR	OP CODE	3 R 0 3 . 0 9
☒ Output Name	Consolidation Data	FLOW CHART REF	3 R 0 3 . 0 9 . T . . 4

Description:

MSC consolidation data revised as described in 3R03.03, 3R03.04, and 3R03.07.

Source (if user input) ☐

Destination (if output) ☒ 4R03.02 4R03.05

Data Elements Contained

Data Element Name	Reference
See 1R03.05.T.1.	

Remarks:

INPUT/OUTPUT DATA DESCRIPTION

☐ Input Name		OP CODE	3 R 0 3 . 0 9
☒ Output Name	Revised MSC FURR Project List	FLOW CHART REF	3 R 0 3 . 0 9 . T . . . 5

Description:

Revised as described in 3R03.08 and 3R03.09.

Source (if user input) ☐

Destination (if output) ☒ 4R03.02 4R03.05

Data Elements Contained

Data Element Name	Reference
See 1R03.05.T.3.	

Remarks:

IV-2 08

INPUT/OUTPUT DATA DESCRIPTION

☐ Input Name ☒ Output Name	Revised Installation FURR Project List	OP CODE	3 R 0 3 . 0 9
		FLOW CHART REF	3 R 0 3 . 0 9 . T . . . 6

Description:

Revised as described in 3R03.03 and 3R03.04.

Source (if user input) ☐

Destination (if output) ☒ 4R03.02 4R03.05

Data Elements Contained

Data Element Name	Reference
See 1R03.05.T.3.	

Remarks:

INPUT/OUTPUT DATA DESCRIPTION

☐ Input Name		OP CODE	3 R 0 3 . 0 9
☒ Output Name	FURR Summary Financial Data	FLOW CHART REF	3 R 0 3 . 0 9 . T _ _ . 7

Description:

Provided to comptoller in input to MAFC COB.

Source (if user input) ☐

Destination (if output) ☒ MAFC comptroller

Data Elements Contained

Data Element Name	Reference
See 1R03.05.T.6.	

Remarks:

REPORT DESCRIPTION - PART A

Report Name:

MAFC FURR Reports

FLOW CHART REF: 3 R 0 3 . 0 9 . R 1-3

Description:

See 3R03.09.T.1-3

3R03.09.T.1	MAFC FURR consolidation data
3R03.09.T.2	MAFC FURR summary data
3R03.09.T.3	MAFC FURR project list

Estimated Number of Pages:

50

Suggested Frequency:

Annual

Trigger(s) for Report Production:

FURR guidance
Receipt of MSC FURR

Required Response Time:

45 working days from installation to HQ DA

Selection and Summarization Options:

OPERATION LOGIC

Operation Name:

Prepare $FURR_{72}$ Guidance

CODE: 4 R 0 3 . 0 1

FURR guidance is prepared on the basis of data contained in the President's budget as further amplified by guidance from OSD, OSA, and the DA staff. The RPMA office provides FURR guidance to installations through MAFC's and MSC's to be used in developing the installation FURR.

Inputs Described Elsewhere

4R03.01.T.1	President's $budget_{71}$
4R03.01.T.2	Program directors guidance
4R03.01.T.3	OSD, OSA, DA staff guidances

Outputs Described Elsewhere

4R03.01.T.4	$FURR_{72}$ guidance

INPUT/OUTPUT DATA DESCRIPTION

☒ Input Name President's Budget$_{71}$	OP CODE	4 R 0 3 . 0 1
☐ Output Name	FLOW CHART REF	4 R 0 3 . 0 1 . T _ _ . 1

Description:

The President's annual budget is submitted to Congress in January each year for the fiscal year beginning 1 July.

Source (if user input) ☐

Destination (if output) ☐

Data Elements Contained

Data Element Name	Reference
Appropriation User/program element/program OMA subappropriation FHMA subappropriation RDT&E subappropriation	President's budget

Remarks:

INPUT/OUTPUT DATA DESCRIPTION

[x] Input Name [ ] Output Name	Program Directors Guidance	OP CODE	4 R 0 3 . 0 1
		FLOW CHART REF	4 R 0 3 0 1 T . . . 2

Description:

Primarily dollar guidance related to RPMA. Used by the RPMAO in preparing FURR guidance.

Source (if user input) [ ]

Destination (if output) [ ]

Data Elements Contained

Data Element Name	Reference
Priority class Functional category Appropriation User/program element/program Status of financing Financing type Reimbursing agency OMA subappropriation FHMA subappropriation	

Remarks:

INPUT/OUTPUT DATA DESCRIPTION

[x] Input Name	OSD, OSA, DA Staff Guidance	OP CODE	4 R 0 3 . 0 1
[ ] Output Name		FLOW CHART REF	4 R 0 3 . 0 1 . T _ _ . 3

Description:

This guidance is financial or functional, depending on the office or origin. In addition to dollar guidance, it contains broad guidelines on priorities, MRPF floor, and IBP policies.

Source (if user input) [ ]

Destination (if output) [ ]

Data Elements Contained

Data Element Name	Reference
Priority class	
Object class	
Elements of expense	
Functional category	
Funded cost	
Unfunded cost	
Appropriation	
FC^4	
Financing type	

Remarks:

OPERATION LOGIC

Operation Name:
Examine Each New or Revised Project or FURR Requirement

CODE: 4 R 0 3 . 0 2

This operation, completed by those elements of the Facilities Engineering Division, OCE, concerned with inputs to the FURR, compares the FURR with the URR submitted for the same budget year. Each new or revised project or FURR requirement is analyzed for validity and appropriate priority within the total RPMA requirements.

Inputs Described Elsewhere

3R03.09.T.1	MAFC FURR consolidation data
3R03.09.T.2	MAFC FURR summary data
3R03.09.T.3	MAFC FURR project list
3R03.09.T.4	Revised MSC FURR consolidation data
3R03.09.T.5	Revised MSC FURR project list
3R03.09.T.6	Revised installation FURR project list
4R03.02.T.1	Program and budget guidance
4R01/02.03.T.1	URR_{72-76}
4R03.04.T.1	$FURR_{71}$
4R04.04.T.1	$MYRR_{71}$
4R03.12.T.1	$SAWP_{71}$
4R05.01/02.T.1	$PYPR_{70}$

OPERATION LOGIC

Operation Name:
Reconcile Changes With MAFC Involved

CODE: 4 R 0 3 . 0 3

After analyzing the FURR, the Facilities Engineering Division OCE, reconciles any changes desired with the MAFC(s) involved. This may be an informal process, telephone, to reach agreement on the FURR submitted by the MAFC. This operation is coordinated with the RPMA office to ensure that a similar operation, 4R03.05, being completed by that office is not in conflict with OCE.

OPERATION LOGIC

Operation Name:
Analyze Effects of Unfinanced Projects

CODE: 4 R 0 3 . 0 4

Analyzing the unfinanced portion of RPMA requirements received in the FURR is one of the most important operations in the RPMA reporting cycle. OCE analysts review all RPMA requirements and determine the overall effect unfinancing a portion of the requirements will have on Army facilities management and maintenance. The results of this analysis are forwarded to the RPMA office for use in providing FURR impact statements to ORMO, COA, and the program directors.

Inputs Described Elsewhere

3R03.09.T.1	MAFC FURR consolidation data
3R03.09.T.2	MAFC FURR summary data
3R03.09.T.3	MAFC FURR project list
3R03.09.T.4	Revised MSC FURR consolidation data
3R03.09.T.5	Revised MSC FURR project list
3R03.09.T.6	Revised installation FURR project list
3R03.02.T.1	Program and budget guidance
4R01/02.03.T.1	URR72-76
4R03.04.T.1	FURR71
4R04.04.T.1	MYRR71
4R03.12.T.1	SAWP71
4R05.01/02.T.1	PYPR70

Outputs Described Elsewhere

4R03.04.T.1	Corrected FURR with comments

INPUT/OUTPUT DATA DESCRIPTION

☐ Input Name		OP CODE	4 R 0 3 . 0 4
☒ Output Name	Corrected FURR With Comments	FLOW CHART REF	4 R 0 3 0 4 . T . . 1

Description:

Revised MAFC FURR's forwarded to RPMA office with OCE narrative analysis. See FURR format.

Source (if user input) ☐

Destination (if output) ☒ 4R03.07

Data Elements Contained

Data Element Name	Reference
	FURR format

Remarks:

OPERATION LOGIC

Operation Name:
Begin Analysis of FURR

CODE: 4 R 0 3 . 0 5

Analysts of the RPMA office, in an independent review of the FURR similar to that described in 4R01/02.01, to determine shortfalls in RPMA requirements as measured against those expressed in the URR and those financed in the FURR.

Inputs Described Elsewhere

3R03.09.T.1	MAFC FURR consolidation data
4R05.01/02.T.1	PYPR70
3R03.09.T.3	MAFC FURR project list
3R03.09.T.4	Revised MSC FURR consolidation data
3R03.09.T.5	Revised MSC FURR project list
3R03.09.T.6	Revised installation FURR project list
4R03.05.T.1	Program and budget guidance
4R01/02.03.T.1 & 4R01/02.05.T.1	URR72-76
4R03.04.T.1 & 4R03.09.T.1	FURR71
4R04.04.T.1 & 4R04.08.T.1	MYRR71
4R03.12.T.1 & 4R03.15.T.1	SAWP71
3R03.09.T.2	MAFC FURR summary data

OPERATION LOGIC

Operation Name:
Compare Summary Data With COB

CODE: 4 R 0 3 . 0 6

RPMA office analysts compare FURR data with the RPMA summary data appearing in the COB to reconcile possible differences.

Inputs Described Elsewhere

3R03.09.T.1	MAFC FURR consolidation data
4R05.01/02.T.1	PYPR70
3R03.09.T.3	MAFC FURR project list
3R03.09.T.4	Revised MSC FURR consolidation
3R03.09.T.5	Revised MSC FURR project list
3R03.09.T.6	Revised installation FURR project list
4R03.05.T.1	Program and budget guidance
4R01/02.03.T.1 & 4R01/02.05.T.1	URR72-76
4R03.04.T.1 & 4R03.09.T.1	FURR71
4R04.04.T.1 & 4R04.08.T.1	MYRR71
4R03.12.T.1 & 4R03.15.T.1	SAWP71
3R03.09.T.2	MAFC FURR summary data
4R03.05.T.2	COB72
4R03.06.T.1	COB72

INPUT/OUTPUT DATA DESCRIPTION

☒ Input Name COB_{72}	OP CODE	4 R 0 3 . 0 6
☐ Output Name	FLOW CHART REF	4 R 0 3 . 0 5 . T . 2 4 R 0 3 . 0 6 . T . 2

Description:

Financial data show summarized RPMA input to COB.

Source (if user input) ☐

Destination (if output) ☐

Data Elements Contained

Data Element Name	Reference
Appropriation Object class Elements of expense Funded cost Unfunded cost Installation code Command abbreviation Financing type OMA subappropriation FHMA subappropriation	COB

Remarks:

OPERATION LOGIC

Operation Name:
Incorporate OCE Changes

CODE: 4R03.07

The RPMA office analysts use the OCE input (analysis and changes to the FURR) in analyzing the effects of unfinanced projects/requirements on the FURR (4R03.07). The OCE input will be a marked-up copy of the FURR and a narrative analysis of the projects and/or requirements impacting on the adequate maintenance of Army facilities.

Inputs Described Elsewhere

4R03.04.T.1	Corrected FURR with comments

OPERATION LOGIC

Operation Name:
Analyze Effects of Unfinanced Projects/Requirements

CODE: 4 R 0 3 . 0 8

As described in 4R03.03, this RPMA operation is one of the most important in the RPMA reporting cycle. Supported by the OCE input, serves as a basis for impact statements provided to the program directors and other elements of the DA staff indicating the shortfalls in RPMA requirements when partially unfinanced.

OPERATION LOGIC

Operation Name:

Prepare Impact Statement

CODE: 4 R 0 3 0 9

Impact statements prepared by the RPMA office inform the program directors and other DA staff elements of the impact on the maintenance of Army facilities expected from the level of RPMA funding indicated in the FURR. These impact statements are similar in format to those used by OCE in providing an input to the RPMA office. The RPMA office prepares a summarized version of the FURR to the necessary level of detail. A narrative analysis accompanies this format to explain the impact of the shortfalls indicated on the Army facilities maintenance picture.

INPUT/OUTPUT DATA DESCRIPTION

☐ Input Name		OP CODE	4 R 0 3 . 0 9
☒ Output Name	FURR Analysis and Impact Statement	FLOW CHART REF	4 R 0 3 . 0 9 . T . . 1

Description:

A summarized version of the FURR

Source (if user input) ☐

Destination (if output) ☒ ORMO, Program Directors, COA

Data Elements Contained

Data Element Name	Reference
Narrative title	
Narrative description	
Functional $ category	
Contract $ required	
Labor $ required	
Material and supplies $ required	
Equipment acquisition $ required	
Total $ required	
Facility number	
Condition rating	
Status	

Remarks:

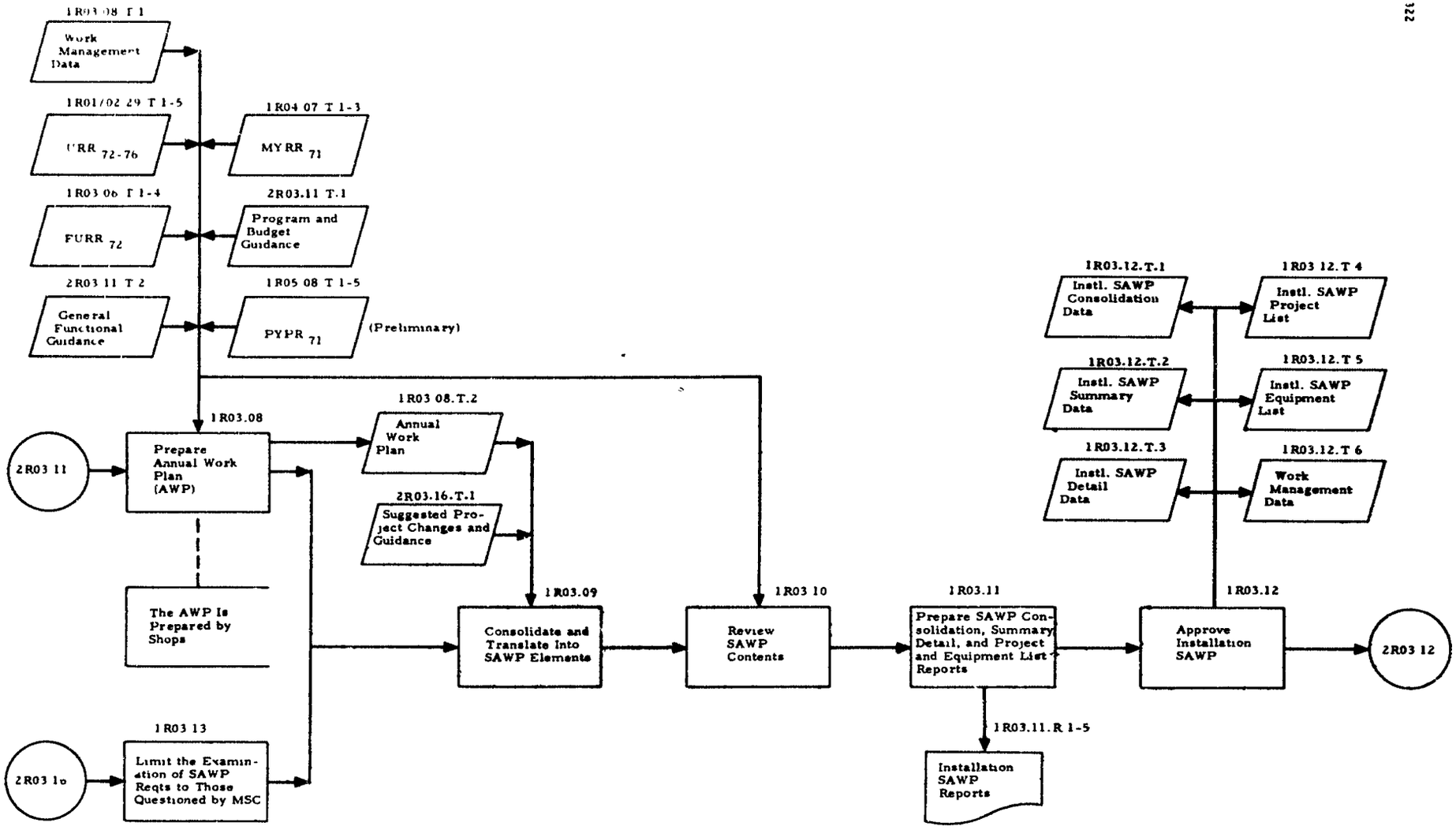

Note: Subscript denotes FY
(Year of execution: FY72)

RPMA BUDGETING FUNCTION
(INSTALLATION PREPARATION OF THE SAWP)

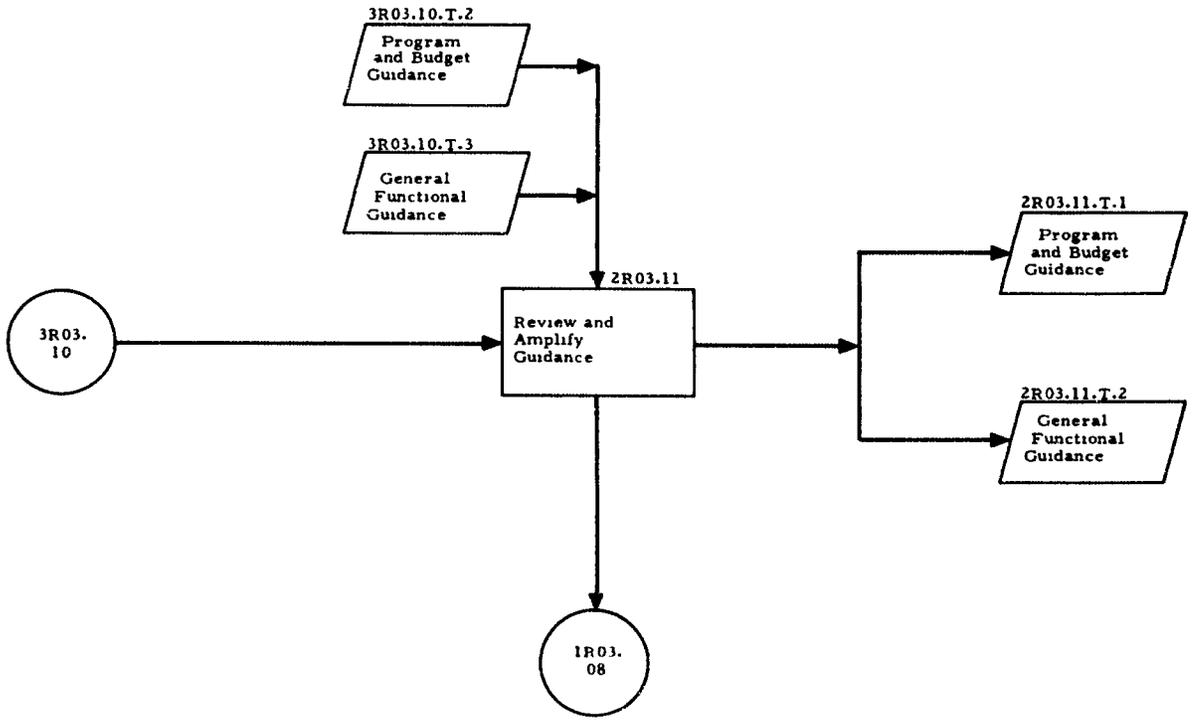

RPMA BUDGETING FUNCTION
(MSC PREPARATION OF THE SAWP)

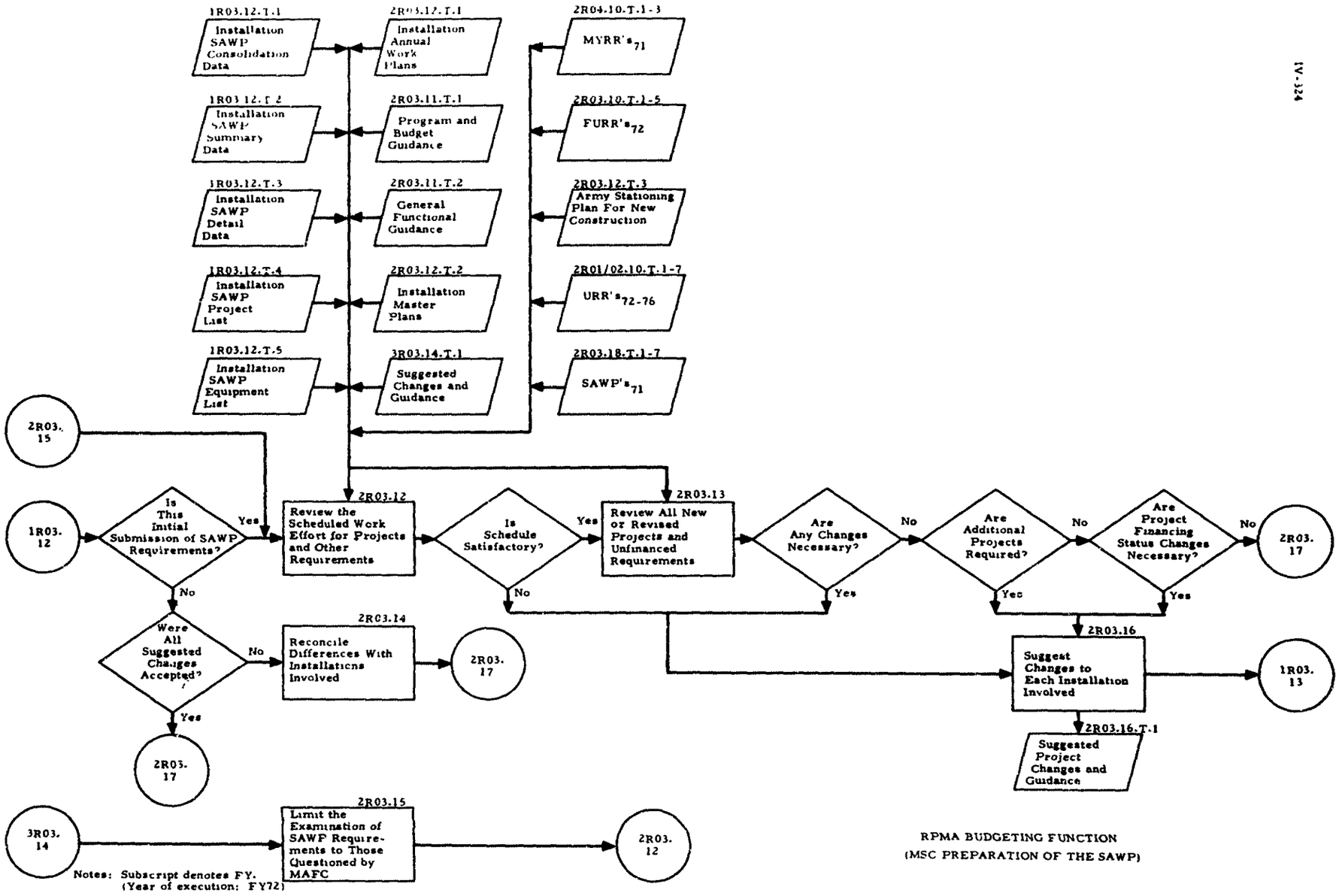

Notes: Subscript denotes FY. (Year of execution: FY72)

RPMA BUDGETING FUNCTION
(MSC PREPARATION OF THE SAWP)

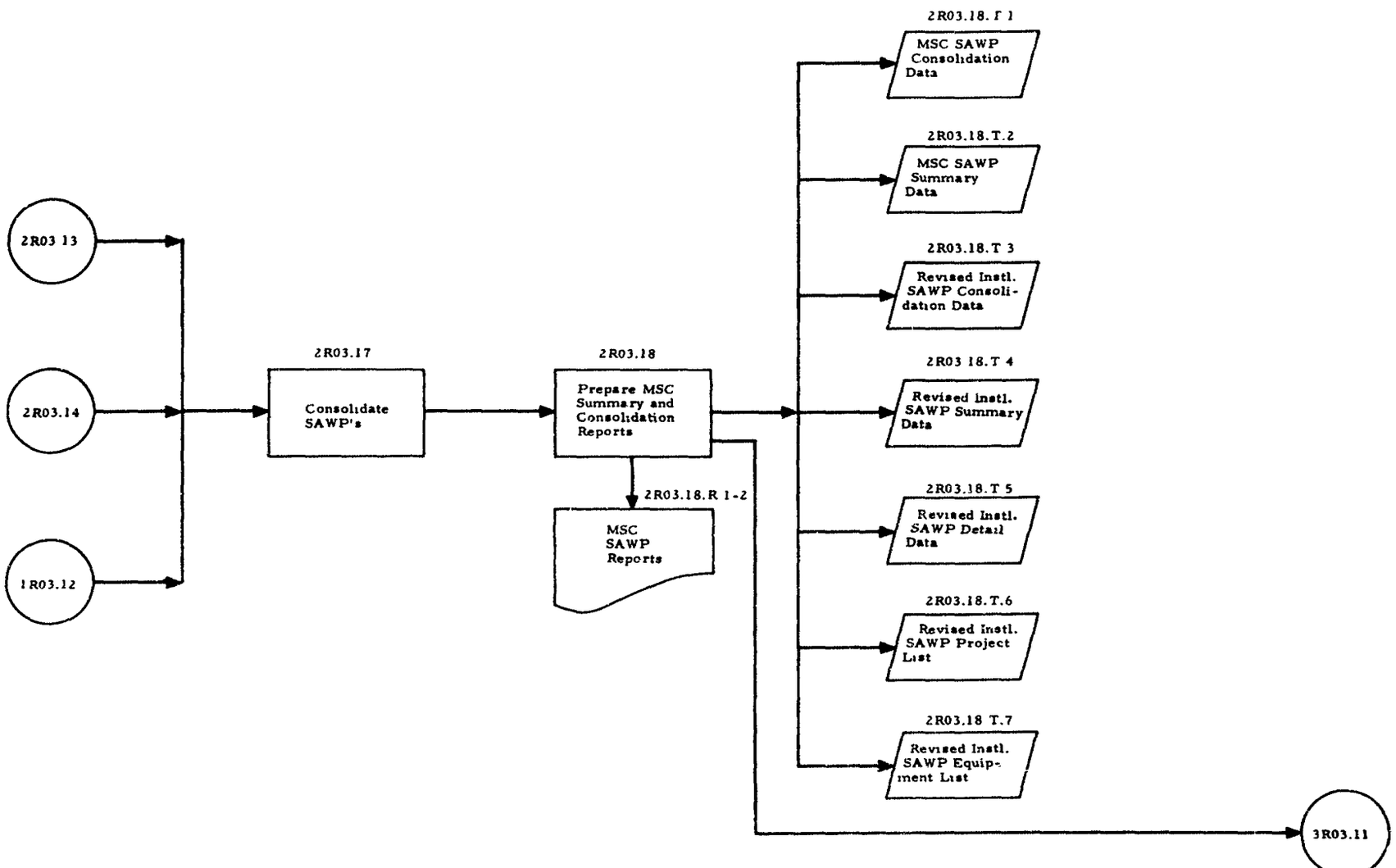

RPMA BUDGETING FUNCTION
(MSC PREPARATION OF THE SAWP)

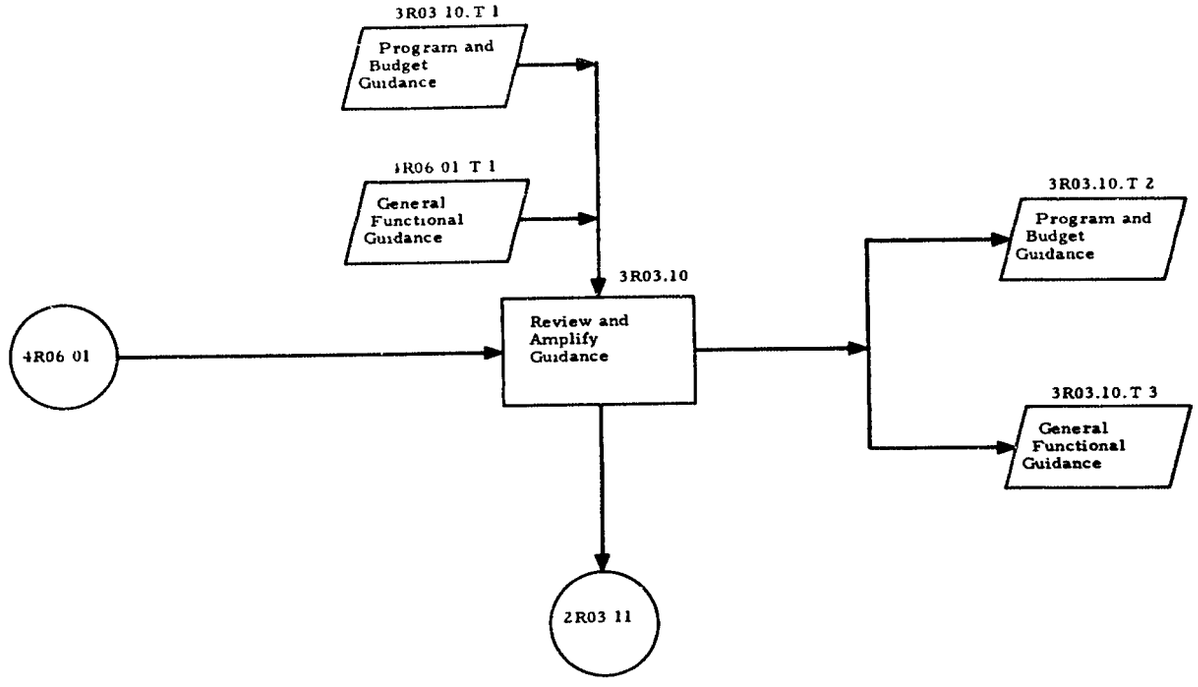

RPMA BUDGETING FUNCTION
(MAFC PREPARATION OF THE SAWP)

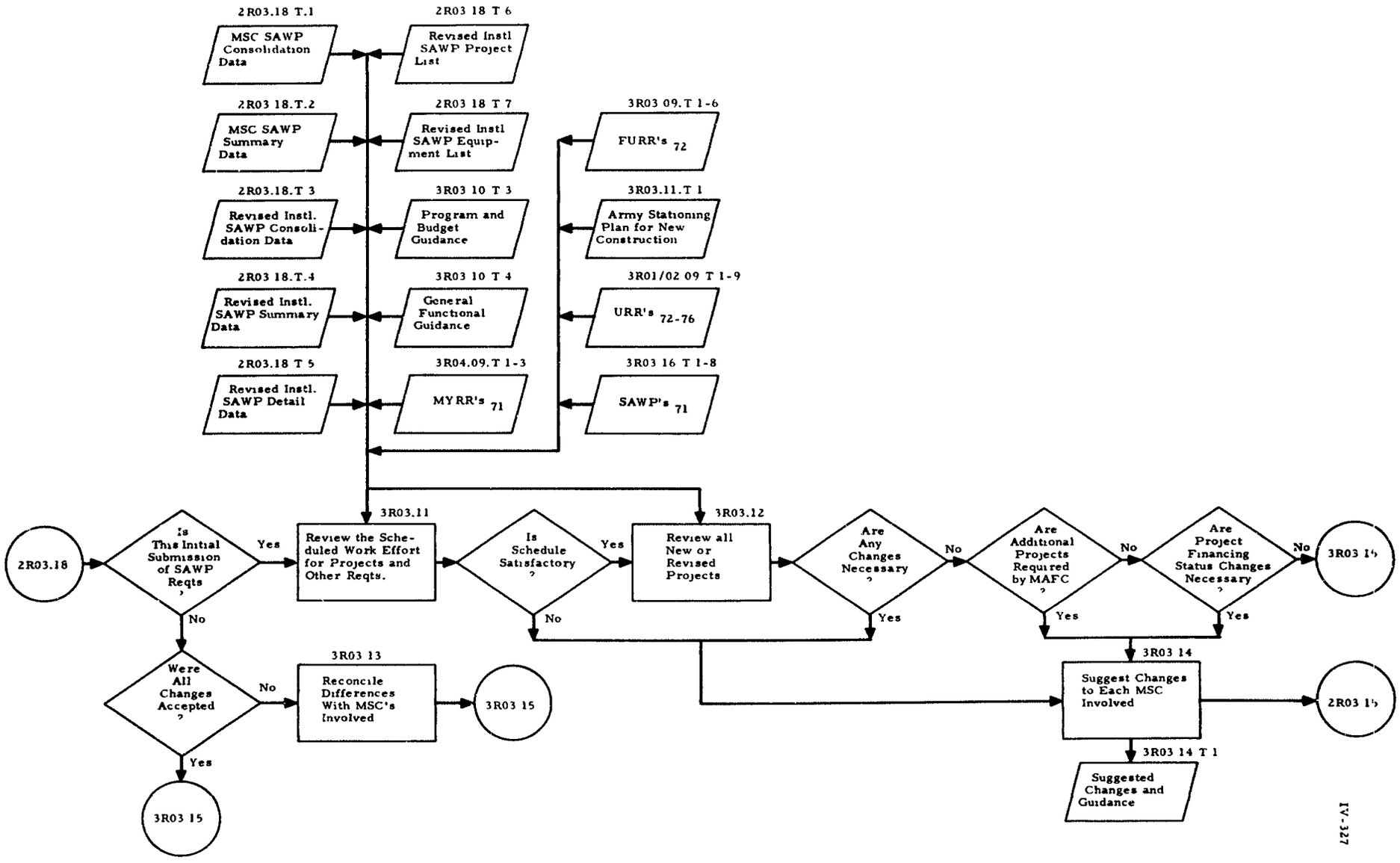

Note: Subscript denotes FY
(Year of execution: FY72)

RPMA BUDGETING FUNCTION
(MAFC PREPARATION OF THE SAWP)

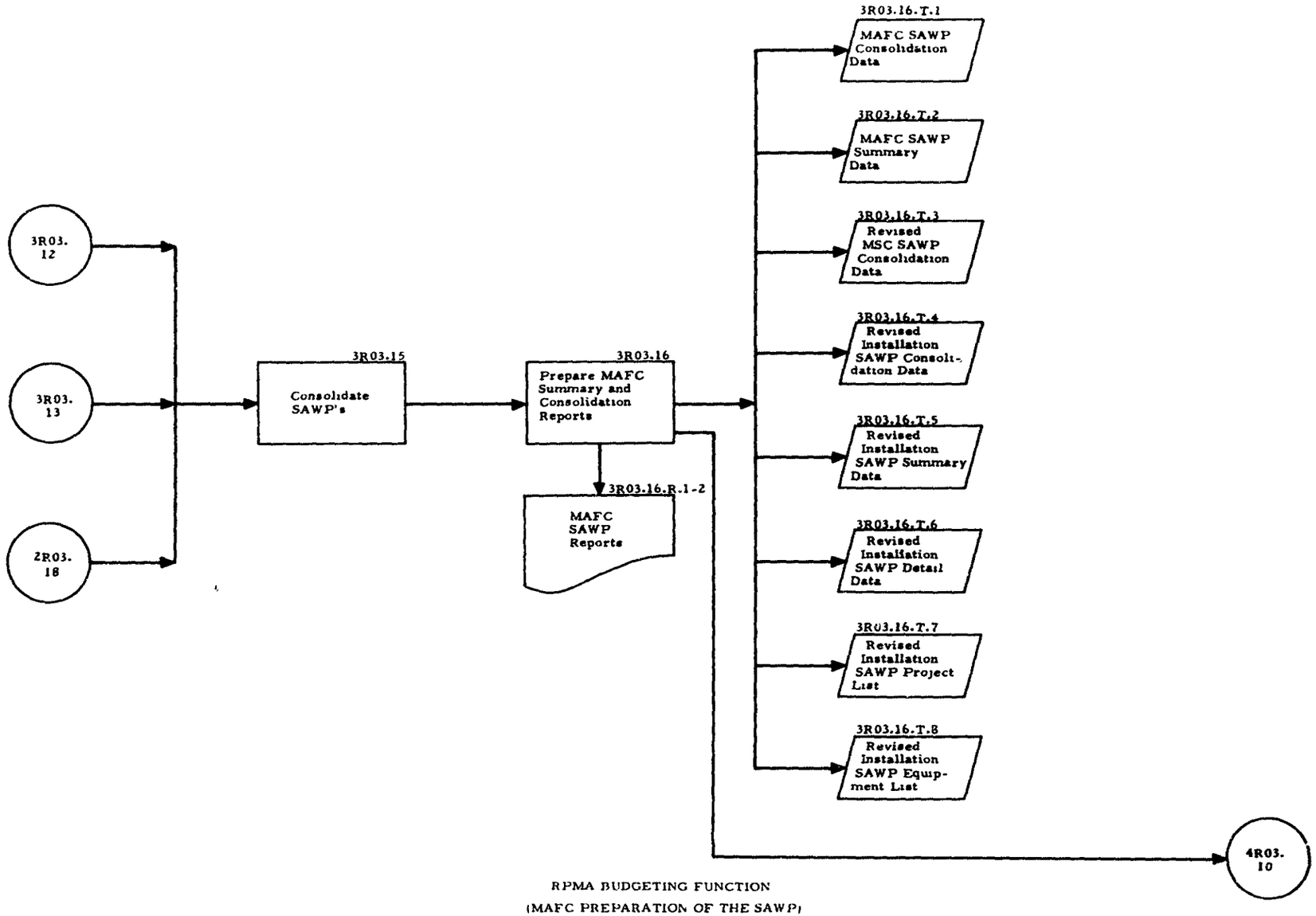

RPMA BUDGETING FUNCTION
(MAFC PREPARATION OF THE SAWP)

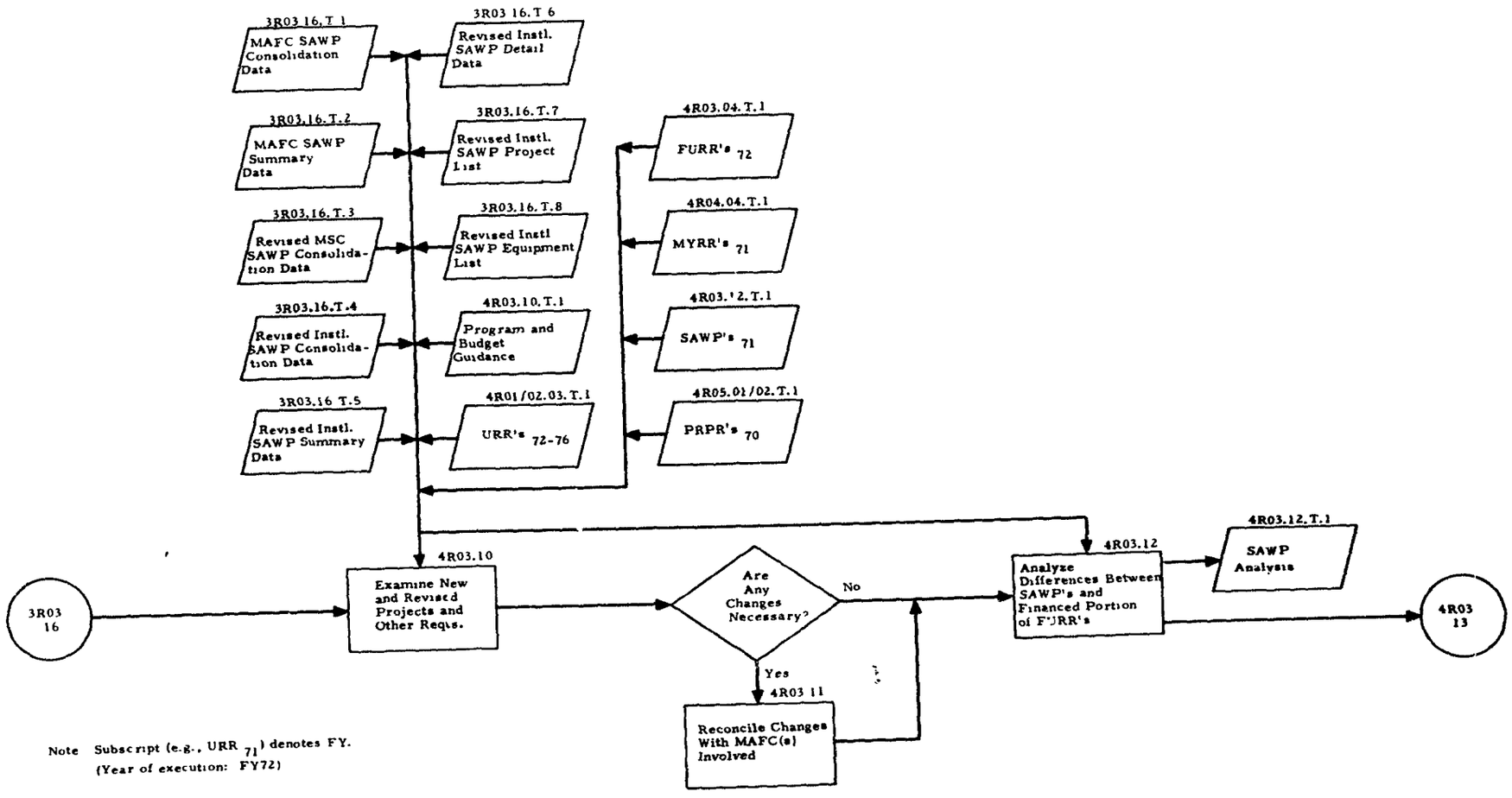

Note Subscript (e.g., URR $_{71}$) denotes FY.
(Year of execution: FY72)

RPMA BUDGETING FUNCTION
(OCE PROCESSING OF THE SAWP)

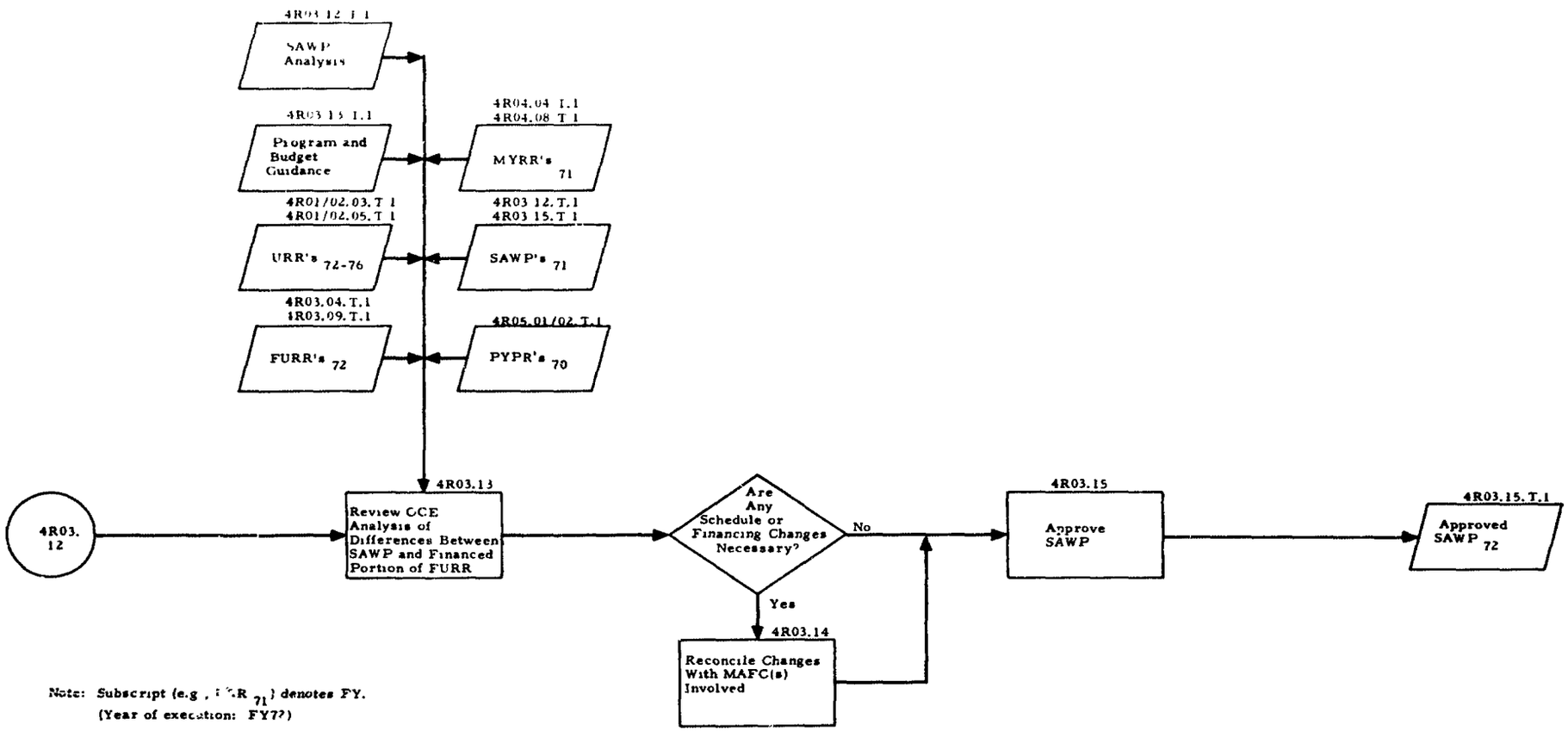

Note: Subscript (e.g., FURR 71) denotes FY.
(Year of execution: FY72)

RPMA BUDGETING FUNCTION
(RPMAO PROCESSING OF THE SAWP)

OPERATION LOGIC

Operation Name:
Prepare Annual Work Plan (AWP)

CODE: 1R03.08

The annual work plan is prepared by the post engineer in accordance with instructions set forth in DA pamphlet 420-6 and as portrayed in RPMA Management Function Analysis, PRC R-1209, Vol. II, Part 1, June 1969, p. IV-47.

Inputs Described Elsewhere

1R01/02.29.T.1-5	URR_{72-76}
1R03.06.T.1-4	$FURR_{72}$
2R03.11.T.2	General functional guidance
1R04.07.T.1-3	$MYRR_{71}$
2R03.11.T.1	Program and budget guidance
1R05.08.T.1-5	$PYPR_{71}$

Outputs Described Elsewhere

1R03.08.T.2	Annual work plan
2R03.16.T.1	Suggested project changes and guidance

INPUT/OUTPUT DATA DESCRIPTION

☒ Input Name	Work Management Data	OP CODE	1R03.08
☐ Output Name		FLOW CHART REF	1R03.08.T 1

Description:

The work management data elements required during preparation of the SAWP are listed below. Refer to the SAWP to determine the context within which these elements are used.

Source (if user input) ☒ Work Management System

Destination (if output) ☐

Data Elements Contained

Data Element Name	Description or Reference
Building component	
Condition rating	
Contract $ cost	
Data class	
Dollars earned	
Equipment acquisition $ cost	
Equipment rental cost	
Equipment type	
Facility component	
Functional category	
Hours to have standards	
Labor $ cost	
Material and supplies $ cost	
Narrative title	

Remarks:

INPUT/OUTPUT DATA DESCRIPTION (Continued)

☒ Input Name Work Management Data ☐ Output Name	OP CODE	1 R 0 3 0 8
	FLOW CHART REF	1 R 0 3 0 8 T 1

Data Elements Contained

Data Element Name	Description or Reference
Number of units	
Per capita usage	
Planned coverage percent	
Planned performance percent	
Priority class	
Review period	
Status	
Target performance	
Total $ cost	
Type of work	
Unit cost	
Unit of measure	
User/program element/program	
Utility work categories	

INPUT/OUTPUT DATA DESCRIPTION

☐ Input Name		OP CODE	1R03.08
☒ Output Name	Suggested Project Changes and Guidance	FLOW CHART REF	2R0316T.1

Description:

The reconciliation of differences and suggested changes to each installation involved as portrayed in 1R03.01.

Source (if user input) ☐

Destination (if output) ☒ 1R03.09

Data Elements Contained

Data Element Name	Reference
See 2R03.08.T.1	

Remarks:

OPERATION LOGIC

Operation Name:

Consolidate and Translate Into SAWP Elements

CODE: 1 R 0 3 . 0 9

This operation is completed by the work coordinating center and involves the translation of AWP requirements expressed in terms of shops into the RPMA requirements expressed in the SAWP by functional category. Some areas of this translation, such as operation of utilities (9050), are direct, but the maintenance of utilities (9060) must be identified from the AWP.

Inputs Described Elsewhere

1R03.08 T.2	Annual work plan
2R03.16.T.1	Suggest project changes and guidance

OPERATION LOGIC

Operation Name:

Review SAWP Contents

CODE: 1 R 0 3 . 1 0

SAWP contents are reviewed before placing the SAWP data in the SAWP summary for forwarding to MSC.

OPERATION LOGIC

Operation Name:
Prepare SAWP Consolidation, Summary, Detail and Project and Equipment List Reports

CODE: 1 R 0 3 1 1

The work coordinating center prepares the SAWP consolidation, summary detail and project and equipment list reports and forwards them to the MSC, accompanied by a list of projects greater than $10,000 with lump sum totals for all other projects and an equipment list.

In preparing the SAWP data for these reports, the work coordinating center uses the financed portion of the FURR with any changes and the AWP as the basis for preparing the SAWP. The SAWP includes only the fully funded activities of the installation AWP and not the unfinanced requirements. In the SAWP, the post engineer expresses how he plans to use funds made available to him for RPMA.

REPORT DESCRIPTION - PART A

Report Name:

Installation SAWP Reports

FLOW CHART REF: 1 R 0 3 1 1 . R 1-5

Description:

1R03.12.T.1	Installation SAWP consolidation data
1R03.12.T.2	Installation SAWP summary data
1R03.12.T.3	Installation SAWP detail data
1R03.12.T.4	Installation SAWP project list
1R03.12.T.5	Installation SAWP equipment list

Estimated Number of Pages:

6, excluding 1R03.12.T.3 (in automated system only)

Suggested Frequency:

Annual

Trigger(s) for Report Production:

General functional guidance
Annual work plan
Program budget guidance

Required Response Time:

45 working days from installation to HQ DA

Selection and Summarization Options:

OPERATION LOGIC

Operation Name:

Approve Installation SAWP

CODE: 1 R 0 3 1 2

See 1R03.06.

Outputs Described Elsewhere

1R03.12.T.6	Work management data (See 1R03.08.T.1)
1R03.12.T.1	Installation SAWP consolidation data
1R03.12.T.2	Installation SAWP summary data
1R03.12.T.4	Installation SAWP project list
1R03.12.T.3	Installation SAWP detail data
1R03.12.T.5	Installation SAWP equipment list

INPUT/OUTPUT DATA DESCRIPTION

☐ Input Name		OP CODE	1 R 0 3 . 1 2
☒ Output Name	Installation SAWP Consolidation Data	FLOW CHART REF	1 R 0 3 . 1 2 . T . . . 1

Description:

See SAWP consolidation format.

Source (if user input) ☐

Destination (if output) ☒ 2R03.12

Data Elements Contained

Data Element Name		Reference
Priority class	Data class	
Functional category	Equipment rental cost	
Data type	User/program element/program	
Installation code		
Command abbreviation		
Status of facility		
Contracts required		
Labor $ required		
Material and supplies $ required		
Equipment acquisition $ required		
Total $ required		
Status of financing		
Review period		

Remarks:

INPUT/OUTPUT DATA DESCRIPTION

☐ Input Name ☒ Output Name	Installation SAWP Summary Data	OP CODE	1 R 0 3 . 1 2
		FLOW CHART REF	1 R 0 3 . 1 2 . T . . . 2

Description:

See SAWP summary format.

Source (if user input) ☐

Destination (if output) ☒ 2R03.12

Data Elements Contained

Data Element Name		Reference
Priority class	Equipment rental cost	
Functional category	User/program element/ program	
Data type	Dollars earned	
Installation code	Unit of measure	
Command abbreviation	Narrative title	
Status of facility	Narrative description	
Contract $ required		
Labor $ required		
Materials and supplies $ required		
Equipment acquisition $ required		
Total $ required		
Status of financing		
Review period		
Data class		

Remarks:

INPUT/OUTPUT DATA DESCRIPTION

☐ Input Name	Installation SAWP	OP CODE	1 R 0 3 . 1 2
☒ Output Name	Detail Data	FLOW CHART REF	1 R 0 3 . 1 2 . T . . . 3

Description:

See SAWP detail format.

Source (if user input) ☐

Destination (if output) ☒ 2R03.12

Data Elements Contained

Data Element Name	Reference
	SAWP detail format

Remarks:

INPUT/OUTPUT DATA DESCRIPTION

☐ Input Name ☒ Output Name	Installation SAWP Project List	OP CODE	1 R 0 3 . 1 2
		FLOW CHART REF	1 R 0 3 . 1 2 . T _ _ . 4

Description:

See SAWP project list format.

Source (if user input) ☐

Destination (if output) ☒ 2R03.12

Data Elements Contained

Data Element Name	Reference
Functional category	
Status of financing	
User/program element/program	
Priority class	
Narrative title	
Narrative description	
Installation code	
Work accomplishment	

Remarks:

INPUT/OUTPUT DATA DESCRIPTION

☐ Input Name		OP CODE	1 R 0 3 . 1 2
☒ Output Name	Installation SAWP Equipment List	FLOW CHART REF	1 R 0 3 . 1 2 . T . . 5

Description:

See SAWP equipment list format.

Source (if user input) ☐

Destination (if output) ☒ 2R03.12

Data Elements Contained

Data Element Name	Reference
Functional category Status of financing User/program element/program Priority class Equipment type Installation code	

Remarks:

OPERATION LOGIC

Operation Name:
Limit the Examination of SAWP Requirements to Those Questioned by MSC

CODE: 1 R 0 3 . 1 3

See 1R03.06.

OPERATION LOGIC

Operation Name:

Review and Amplify Guidance

CODE: 2 R 0 3 . 1 1

See 3R01/02.01.

Inputs Described Elsewhere

3R03.10.T.2	Program and budget guidance
3R03.10.T.3	General functional guidance

Outputs Described Elsewhere

2R03.11.T.1	Program and budget guidance
2R03.11.T.2	General functional guidance

OPERATION LOGIC

Operation Name:
Review the Scheduled Work Effort for Projects and Other Requirements

CODE: 2 R 0 3 . 1 2

This operation by MSC staff engineer personnel is primarily a review function, since a more detailed analysis was made of the FURR in which most or all of the SAWP detail appeared as financed requirements. This review is to ensure that the SAWP conforms to RPMA requirements expressed by priority in the URR and FURR preceding the SAWP.

Inputs Described Elsewhere

1R03.12.T.1	Installation SAWP consolidation data
1R03.12.T.2	Installation SAWP summary data
1R03.12.T.4	Installation SAWP project list
1R03.12.T.3	Installation SAWP detail data
1R03.12.T.5	Installation SAWP equipment list
3R03.14.T.1	Suggested changes and guidance
2R03.12.T.1	Installation annual work plans
2R03.11.T.1	Program and budget guidance
2R03.11.T.2	Installation master plan
2R03.12.T.2	General functional guidance
2R03.10.T.1-3	MYRR71
2R03.10.T.1-5	FURR72
2R03.12.T.3	Army stationing plan for new construction
2R01/02.10.T.1-7	URR72-76
2R03.18.T.1-7	SAWP71

OPERATION LOGIC

Operation Name:
Review All New or Revised Projects and Unfinanced Requirements

CODE: 2R03.13

Each new or revised project from those submitted with the FURR are reviewed by MSC to determine the validity of the revision or addition to the project list. In forwarding the project list, the installation indicates projects that had been funded in the FURR but unfunded when preparing the SAWP.

Inputs Described Elsewhere

1R03.12.T.1	Installation SAWP consolidation data
1R03.12.T.2	Installation SAWP summary data
1R03.12.T.4	Installation SAWP project list
1R03.12.T.3	Installation SAWP detail data
1R03.12.T.5	Installation SAWP equipment list
3R03.14.T.1	Suggested changes and guidance
2R03.12.T.1	Installation annual work plans
2R03.11.T.1	Program and budget guidance
2R03.11.T.2	General functional guidance
2R03.12.T.2	Installation master plan
2R04.10.T.1-3	$MYRR_{71}$
2R03.10.T.1-5	$FURR_{72}$
2R03.12.T.3	Army stationing plan for new construction
2R01/02.10.T.1-7	URR_{72-76}
2R03.18.T.1-7	$SAWP_{71}$

OPERATION LOGIC

Operation Name:

Reconcile Differences With Installations Involved

CODE: 2 R 0 3 . 1 4

See 2R03.03.

OPERATION LOGIC

Operation Name:
Limit the Examination of SAWP Requirements to Those Questioned by MAFC

CODE: 2 R 0 3 . 1 5

See 1R03.06.

OPERATION LOGIC

Operation Name:
Suggest Changes to Each Installation Involved

CODE: 2R03.16

See 2R03.07.

Outputs Described Elsewhere

2R03.16.T.1 Suggested project changes and guidance

OPERATION LOGIC

Operation Name:

Consolidate SAWP's

CODE: 2 R 0 3 1 7

In this final MSC operation before preparing the consolidation and summary of the installation SAWP's, MSC consolidates all SAWP data contained in the installation SAWP's to provide MAFC the MSC SAWP consolidation and summary of all installation data.

OPERATION LOGIC

Operation Name:
Prepare MSC Summary and Consolidation Reports

CODE: 2 R 0 3 . 1 8

See 2R03.09.

MSC prepares a SAWP summary and consolidation and forwards it, along with each installation's SAWP summary and detailed data report (including project and equipment lists), to MAFC.

Outputs Described Elsewhere

2R03.18.T.2	MSC SAWP summary data
2R03.18.T.3	Revised installation SAWP consolidation data
2R03.18.T.6	Revised installation SAWP project list
2R03.18.T.1	MSC SAWP consolidation data
2R03.18.T.4	Revised installation SAWP summary data
2R03.18.T.5	Revised installation SAWP detail data
2R03.18.T.7	Revised installation SAWP equipment list

INPUT/OUTPUT DATA DESCRIPTION

☐ Input Name		OP CODE	2 R 0 3 . 1 8
☒ Output Name	MSC SAWP Consolidation Data	FLOW CHART REF	2 R 0 3 . 1 8 . T . 1

Description:

A consolidation by MSC of installation SAWP consolidation data. See SAWP consolidation format.

Source (if user input) ☐

Destination (if output) ☒ 3R03.11

Data Elements Contained

Data Element Name	Reference
See 1R03.12.T.1.	

Remarks:

INPUT/OUTPUT DATA DESCRIPTION

☐ Input Name		OP CODE	2 R 0 3 . 1 8
☒ Output Name	MSC SAWP Summary Data	FLOW CHART REF	2 R 0 3 . 1 8 . T . . . 2

Description:

A consolidation by MSC of installation SAWP summary data.
See SAWP summary format.

Source (if user input) ☐

Destination (if output) ☒ 3R03.11

Data Elements Contained

Data Element Name	Reference
See 1R03.12.T.2.	

Remarks:

INPUT/OUTPUT DATA DESCRIPTION

☐ Input Name	Revised Installation SAWP Consolidation Data	OP CODE	2 R 0 3 . 1 8
☒ Output Name		FLOW CHART REF	2 R 0 3 1 8 T . 3

Description:

Installation consolidation data revised as described in 2R03.13, 2R03.14, and 2R03.16.

Source (if user input) ☐

Destination (if output) ☒ 3R03.11

Data Elements Contained

Data Element Name	Reference
See 1R03.12.T.1.	

Remarks:

INPUT/OUTPUT DATA DESCRIPTION

☐ Input Name		OP CODE	2 R 0 3 . 1 8
☒ Output Name	Revised Installation SAWP Summary Data	FLOW CHART REF	2 R 0 3 . 1 8 . T . . 4

Description:

Installation summary data revised as described in 2R03.13, 2R03.14, and 2R03.16.

Source (if user input) ☐

Destination (if output) ☒ 3R03.11

Data Elements Contained

Data Element Name	Reference
See 1R03.12.T.2.	

Remarks:

INPUT/OUTPUT DATA DESCRIPTION

☐ Input Name		OP CODE	2 R 0 3 . 1 8
☒ Output Name	Revised Installation SAWP Detail Data	FLOW CHART REF	2 R 0 3 . 1 8 . T . . . 5

Description:

Installation detail data revised as described in 2R03.12, 2R03.13, 2R03.14, and 2R03.16.

Source (if user input) ☐

Destination (if output) ☒ 3R03.11

Data Elements Contained

Data Element Name	Reference
See 1R03.12.T.3.	

Remarks:

INPUT/OUTPUT DATA DESCRIPTION

☐ Input Name ☒ Output Name	Revised Installation SAWP Project List	OP CODE	2 R 0 3 . 1 8
		FLOW CHART REF	2 R 0 3 . 1 8 . T . . . 6

Description:

Revised as described in 2R03.13 and 2R03.14.

Source (if user input) ☐

Destination (if output) ☒ 3R03.11

Data Elements Contained

Data Element Name	Reference
See 1R03.12.T.4.	

Remarks:

INPUT/OUTPUT DATA DESCRIPTION

☐ Input Name		OP CODE	2 R 0 3 . 1 8
☒ Output Name	Revised Installation SAWP Equipment List	FLOW CHART REF	2 R 0 3 . 1 8 . T . . 7

Description:

Revised as described in 2R03.13 and 2R03.14.

Source (if user input) ☐

Destination (if output) ☒ 3R03.11

Data Elements Contained

Data Element Name	Reference
See 1R03.12.T.5.	

Remarks:

REPORT DESCRIPTION - PART A

Report Name:

MSC SAWP Reports

FLOW CHART REF: 2 R 0 3 . 1 8 . R 1-2

Description:

See 2R03.18.T.1-2

Estimated Number of Pages:

12

Suggested Frequency:

Annual

Trigger(s) for Report Production:

General functional guidance
Annual work plan
Program budget guidance

Required Response Time:

45 working days from installation to HQ DA

Selection and Summarization Options:

OPERATION LOGIC

Operation Name:

Review and Amplify Guidance

CODE: 3 R 0 3 . 1 0

See 3R01/02.01.

Inputs Described Elsewhere

3R03.10.T.1	Program budget guidance
4R06.10.T.1	General functional guidance

Outputs Described Elsewhere

3R03.10.T.2	Program and budget guidance
3R03.10.T.3	General functional guidance

OPERATION LOGIC

Operation Name:
Review the Scheduled Work Effort for Projects and Other Requirements

CODE: 3 R 0 3 . 1 1

See 2R03.10.

This MAFC-level operation is a review function broad in nature because of the large number of projects and other requirements and the technical staff available. The review deals with what the MSC SAWP's propose to accomplish as measured against the MAFC RPMA requirements established in the MAFC URR addressing the same budget year as the SAWP.

Inputs Described Elsewhere

2R03.18.T.3	Revised installation SAWP consolidation data
2R03.18.T.4	Revised installation SAWP summary data
2R03.18.T.5	Revised installation SAWP detail data
2R03.18.T.6	Revised installation SAWP project list
2R03.18.T.7	Revised installation SAWP equipment list
2R03.18.T.2	MSC SAWP summary data
3R03.10.T.3	Program and budget guidance
3R03.10.T.4	General functional guidance
2R03.18.T.1	MSC SAWP consolidation data
3R03.09.T.1-3	MYRR71
3R03.09.T.1-6	FURR72
3R03.11.T.1	Army stationing plan for new construction
3R01/02.09.T.1-9	URR72-76
3R03.16.T.1-8	SAWP71

OPERATION LOGIC

Operation Name:
Review All New or Revised Projects

CODE: 3 R 0 3 . 1 2

See 3R03.11.

OPERATION LOGIC

Operation Name:
Reconcile Differences With MSC's Involved

CODE: 3 R 0 3 . 1 3

See 2R03.03 and 4R03.02.

OPERATION LOGIC

Operation Name:
Suggest Changes to Each MSC Involved

CODE: 3 R 0 3 . 1 4

See 2R03.07.

INPUT/OUTPUT DATA DESCRIPTION

☐ Input Name		OP CODE	3 R 0 3 . 1 4
☒ Output Name	Suggested Changes and Guidance	FLOW CHART REF	3 R 0 3 . 1 4 . T . 1

Description:

The reconciliation of differences and suggested changes to each MSC involved as portrayed in 3R03.14.

Source (if user input) ☐

Destination (if output) ☒ 2R03.15

Data Elements Contained

Data Element Name	Reference
See 2R03.08.T.1.	

Remarks:

OPERATION LOGIC

Operation Name:

Consolidate SAWP's

CODE: 3 R 0 3 . 1 5

See 2R03.15.

OPERATION LOGIC

Operation Name:
Prepare MAFC Summary and Consolidation Reports

CODE: 3 R 0 3 . 1 6

See 2R03.09 and 2R03.16.

MAFC prepares a SAWP summary and consolidation for OCE. Attached to the MAFC SAWP is each MSC SAWP consolidation and each installation SAWP. Summary and detailed data report, including installation project and equipment lists.

Outputs Described Elsewhere

3R03.16.T.2	MAFC SAWP summary data
3R03.16.T.4	Revised installation SAWP consolidation data
3R03.16.T.1	MAFC SAWP consolidation data
3R03.16.T.3	Revised MSC SAWP consolidation data
3R03.16.T.5	Revised installation SAWP summary data
3R03.16.T.6	Revised installation SAWP detail data
3R03.16.T.7	Revised installation SAWP project list
3R03.16.T.8	Revised installation SAWP equipment list

INPUT/OUTPUT DATA DESCRIPTION

☐ Input Name		OP CODE	3 R 0 3 . 1 6
☒ Output Name	MAFC SAWP Consolidation Data	FLOW CHART REF	3 R 0 3 . 1 6 . T . . 1

Description:

A consolidation by MAFC of MSC SAWP consolidation data.
See SAWP consolidation format.

Source (if user input) ☐

Destination (if output) ☒ 4R03.10

Data Elements Contained

Data Element Name	Reference
See 1R03.12.T.1.	

Remarks:

INPUT/OUTPUT DATA DESCRIPTION

☐ Input Name		OP CODE	3 R 0 3 . 1 6
☒ Output Name	MAFC SAWP Summary Data	FLOW CHART REF	3 R 0 3 . 1 6 . T . . 2

Description:

A consolidation of MSC SAWP summary data.
See SAWP summary format.

Source (if user input) ☐

Destination (if output) ☒ 4R03.10

Data Elements Contained

Data Element Name	Reference
See 1R03.12.T.2.	

Remarks:

INPUT/OUTPUT DATA DESCRIPTION

☐ Input Name		OP CODE	3 R 0 3 . 1 6
☒ Output Name	Revised MSC SAWP Consolidation Data	FLOW CHART REF	3 R 0 3 . 1 6 . T . . . 3

Description:

MSC consolidation data revised as described in 3R03.12, 3R03.13, and 3R03.14.

Source (if user input) ☐

Destination (if output) ☒ 4R03.10

Data Elements Contained

Data Element Name	Reference
See 1R03.12.T.1.	

Remarks:

INPUT/OUTPUT DATA DESCRIPTION

☐ Input Name	Revised Installation	OP CODE	3 R 0 3 . 1 6
☒ Output Name	SAWP Consolidation Data	FLOW CHART REF	3 R 0 3 . 1 6 . T . . . 4

Description:

Forwarded by MAFC as revised by MSC and MAFC.

Source (if user input) ☐

Destination (if output) ☒ 4R03.10

Data Elements Contained

Data Element Name	Reference
See 1R03.12.T.1.	

Remarks:

INPUT/OUTPUT DATA DESCRIPTION

☐ Input Name ☒ Output Name	Revised Installation SAWP Summary Data	OP CODE	3 R 0 3 . 1 6
		FLOW CHART REF	3 R 0 3 . 1 6 . 1 . . . 5

Description:

Forwarded by MAFC as revised by MSC and MAFC.

Source (if user input) ☐

Destination (if output) ☒ 4R03.10

Data Elements Contained

Data Element Name	Reference
See 1R03.12.T.2.	

Remarks:

INPUT/OUTPUT DATA DESCRIPTION

☐ Input Name		OP CODE	3 R 0 3 . 1 6
☒ Output Name	Revised Installation SAWP Detail Data	FLOW CHART REF	3 R 0 3 . 1 6 . T . . . 6

Description:

Forwarded by MAFC as revised by MSC and MAFC.

Source (if user input) ☐

Destination (if output) ☒ 4R03.10.

Data Elements Contained

Data Element Name	Reference
See 1R03.12.T.3.	

Remarks:

INPUT/OUTPUT DATA DESCRIPTION

☐ Input Name		OP CODE	3 R 0 3 . 1 6
☒ Output Name	Revised Installation SAWP Project List	FLOW CHART REF	3 R 0 3 . 1 6 . T . . 7

Description:

Forwarded by MAFC as revised by MSC and MAFC.

Source f user input) ☐

Destination (if output) ☒ 4R03.10

Data Elements Contained

Data Element Name	Reference
See 1R03.12.T.4.	

Remarks:

INPUT/OUTPUT DATA DESCRIPTION

☐ Input Name		OP CODE	3 R 0 3 . 1 6
☒ Output Name	Revised Installation SAWP Equipment List	FLOW CHART REF	3 R 0 3 . 1 6 . T . . 8

Description:

Forwarded by MAFC as revised by MSC and MAFC.

Source (if user input) ☐

Destination (if output) ☒ 4R03.10

Data Elements Contained

Data Element Name	Reference
See 1R03.12.T.5.	

Remarks:

REPORT DESCRIPTION - PART A

Report Name:

MAFC SAWP Reports

FLOW CHART REF: 3 R 0 3 1 6 . R 1-2

Description:

See 3R03.16.T.1-2

3R03.16.T.1	MAFC SAWP consolidated data
3R03.16.T.2	MAFC SAWP summary data

Estimated Number of Pages:

50

Suggested Frequency:

Annual

Trigger(s) for Report Production:

General functional guidance
Annual work plan
Program budget guidance

Required Response Time:

45 working days from installation to HQ DA

Selection and Summarization Options:

OPERATION LOGIC

Operation Name:
Examine New and Revised Projects and Other Requirements

CODE: 4 R 0 3 . 1 0

See 2R03.11.

Inputs Described Elsewhere

3R03.16.T.1	MAFC SAWP consolidation data
3R03.16.T.2	MAFC SAWP summary data
3R03.16.T.3	Revised MSC SAWP consolidation data
3R03.16.T.5	Revised installation SAWP summary data
3R03.16.T.6	Revised installation SAWP detail data
3R03.16.T.7	Revised installation SAWP project list
3R03.16.T.8	Revised installation SAWP equipment list
4R03.10.T.1	Program and Budget Guidance
4R01/02.03.T.1	URR_{72-76}
4R03.04.T.1	$FURR_{72}$
4R04.04.T.1	$MYRR_{71}$
4R03.12.T.1	$SAWP_{71}$
4R05.01/02.T.1	$PYPR_{70}$

OPERATION LOGIC

Operation Name:
Reconcile Changes With MAFC(s) Involved

CODE: 4 R 0 3 . 1 1

See 2R03.03.

OPERATION LOGIC

Operation Name:
Analyze Differences Between SAWP's and Financed Portion of FURR

CODE: 4R03.12

This analysis by technical personnel of the Facilities Engineering Division, OCE, provides valuable information relating to projected RPMA requirements, that portion of the RPMA requirements financed in the FURR, and the installation's plan of execution (SAWP) to accomplish RPMA objectives. The analysis also forms the basis for measuring performance upon receipt of the PYPR and for providing data related to shortfalls in RPMA requirements. Upon completion of the analysis, OCE provides the RPMA Office with a marked-up copy of the MAFC SAWP summary with appropriate narrative analyses of the SAWP/FURR comparison.

Inputs

3R03.16.T.1	MAFC SAWP consolidation data
3R03.16.T.2	MAFC SAWP summary data
3R03.16.T.3	Revised MSC SAWP consolidation data
3R03.16.T.5	Revised installation SAWP summary data
3R03.16.T.6	Revised installation SAWP detail data
3R03.16.T.7	Revised installation SAWP project list
3R03.16.T.8	Revised installation SAWP equipment list
4R03.10.T.1	Program and budget guidance
4R01/02.03.T.1	URR_{72-76}
4R03.04.T.1	$FURR_{72}$
4R04.04.T.1	$MYRR_{71}$
4R03.12.T.1	$SAWP_{71}$
4R05.01/02.T.1	$PYPR_{70}$

Output

4R03.12.T.1	SAWP analysis

INPUT/OUTPUT DATA DESCRIPTION

☐ Input Name	OP CODE	4 R 0 3 . 1 2
☒ Output Name SAWP Analysis	FLOW CHART REF	4 R 0 3 . 1 2 . T. . . 1

Description:

A marked-up copy of the MAFC SAWP summary with appropriate narrative analysis.

Source (if user input) ☐

Destination (if output) ☒ 4R03.13

Data Elements Contained

Data Element Name	Reference
See SAWP summary.	

Remarks:

OPERATION LOGIC

Operation Name:
Reconcile Changes With MAFC(s) Involved

CODE: 4 R 0 3 . 1 4

See 2R03.03 and 4R03.02.

INPUT/OUTPUT DATA DESCRIPTION

☐ Input Name		OP CODE	4 R 0 3 . 1 4
☒ Output Name	Approved SAWP	FLOW CHART REF	4 R 0 3 . 1 5 . T _ _ . 1

Description:

A copy of the SAWP (consolidation, summary, and detail) approved by the RPMA office for each MAFC.

Source (if user input) ☐

Destination (if output) ☒ Maintain RPMAO

Data Elements Contained

Data Element Name	Reference
See 1R03.12.T.1, 1R03.12.T.2, and 1R03.12.T.3.	

Remarks:

OPERATION LOGIC

Operation Name:
Approve SAWP

CODE: 4 R 0 3 1 5

As a final action in the SAWP process, the RPMA office approves the SAWP, thereby establishing the RPMA work plan for the execution year.

Outputs Described Elsewhere

4R03.15.T.1	Approved $SAWP_{72}$

OPERATION LOGIC

Operation Name:
Review OCF Analysis of Differences Between SAWP and Financed Portion of FURR

CODE: 4 R 0 3 1 3

This operation, completed by analysts in the RPMA office, uses the OCE analysis to provide program directors with data related to the adequacy of RPMA funding for their programs. It is also used to develop data for budget estimates and hearings to validate RPMA requirements--those FURR requirements not accomplished by the SAWP--being developed by the program directors.

Inputs Described Elsewhere

4R03.12.T.1	SAWP analysis
4R03.13.T.1	Program and budget guidance
4R01/02.03.T.1 and 4R01/02.05.T.1	URR_{72-76}
4R03.04.T.1 and 4R03.09.T.1	$FURR_{72}$
4R04.04.T.1 and 4R04.08.T.1	$MYRR_{71}$
4R03.12.T.1 and 4R03.15.T.1	$SAWP_{71}$
4R05.01/02.T.1	$PYPR_{70}$

FUNCTION NARRATIVE (data flow through operations)

Function Name:
Execution

CODE: 1R04-4R04

The execution function lasts 12 months. During this time, the post engineer prepares an abbreviated input to the previously discussed BER. He also prepares a Mid-Year Review Report (MYRR) after the fourth month. The MYRR discusses digressions from programed and budgeted activities and expenditures for the first quarter, it documents the causes, and it shows how the digressions will affect the remaining three quarters. The MYRR contains historical data that can be compared with the SAWP. These first-quarter performance data are vital in evaluating the effectiveness of spent funds: they are the first indicators of the success of the programing, planning, and budgeting functions.

The MSC and the MAFC review the MYRR for validity, accuracy of estimates, and impact on future activities, remembering that possible mission changes could require additions or deletions that could require reprograming of activities or reordering of task priorities. Discrepancies, regardless of cause, are discussed between the reviewing echelon and the next lower echelon. Necessary changes are incorporated into the reprograming activity. Reprograming, if needed, ascends through RPMA channels to HQ DA.

RPMAO extensively evaluates the MYRR. Information in the MYRR provides the program directors with sufficient visibility to determine the adequacy of RPMA funding.

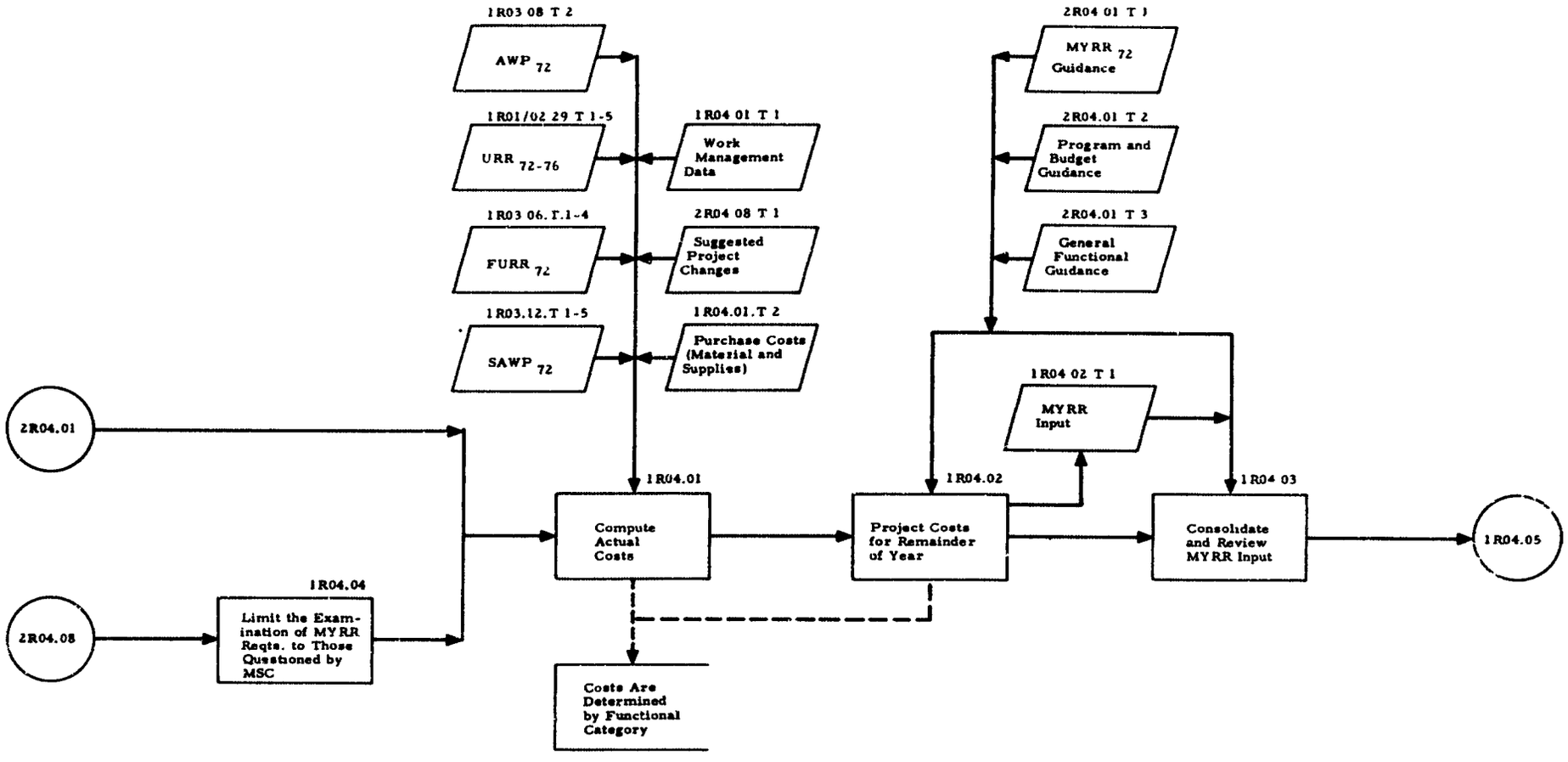

Note: Subscript (e.g., URR_{71}) denotes FY.
(Year of execution: FY72)

RPMA EXECUTION FUNCTION
(INSTALLATION PREPARATION OF THE MYRR)

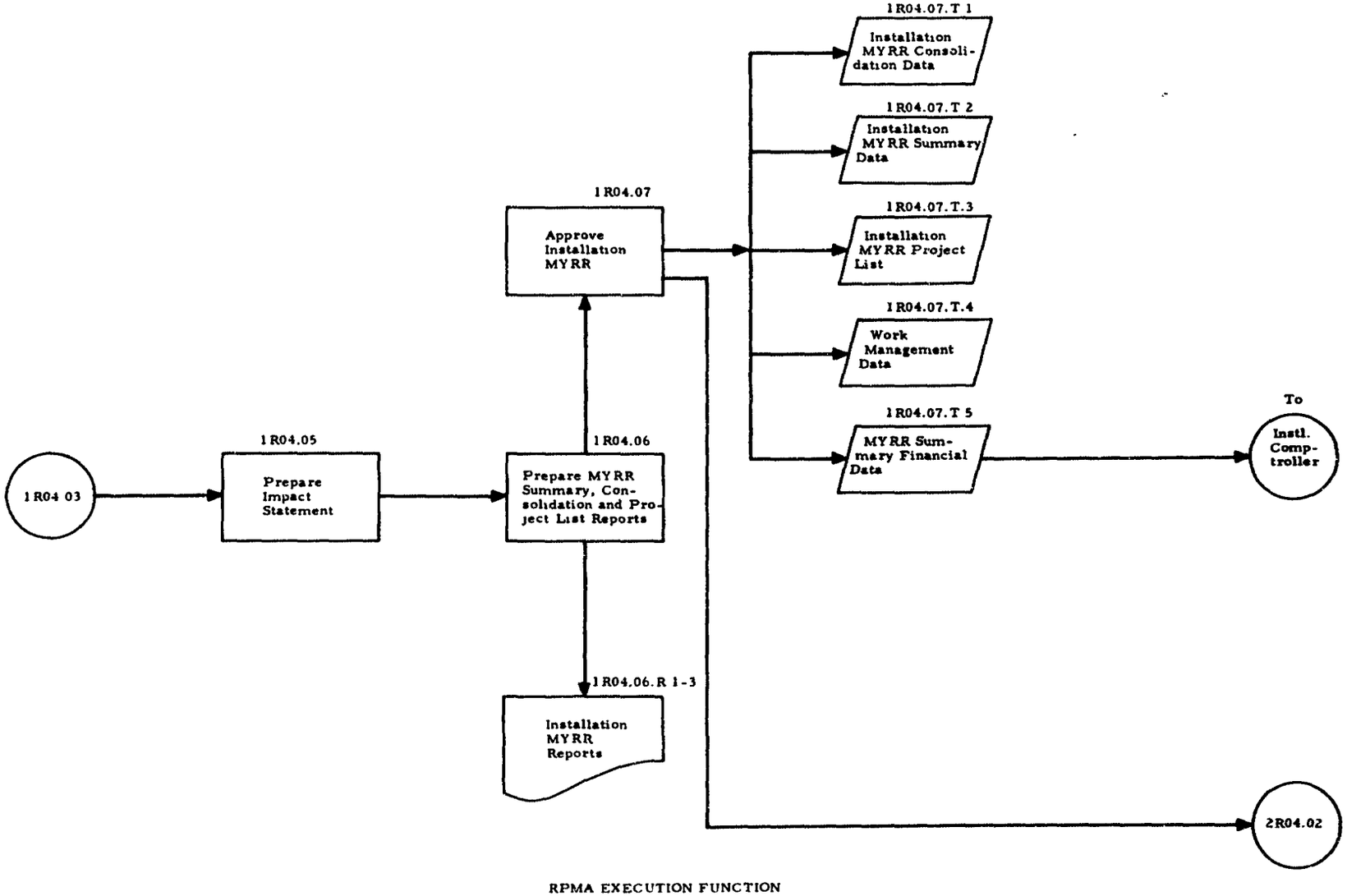

RPMA EXECUTION FUNCTION
(INSTALLATION PREPARATION OF THE MYRR)

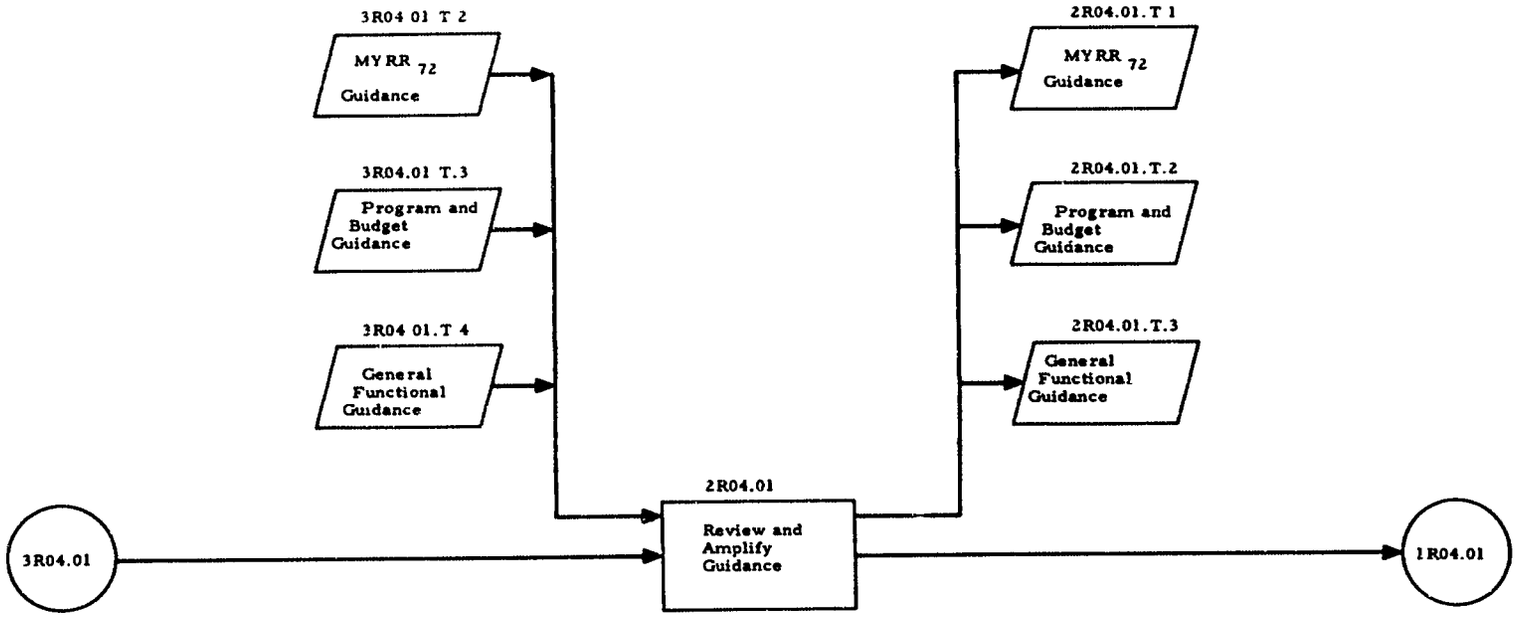

Note: Subscript denotes FY.
(Year of execution: FY72)

RPMA EXECUTION FUNCTION
(MSC PREPARATION OF THE MYRR)

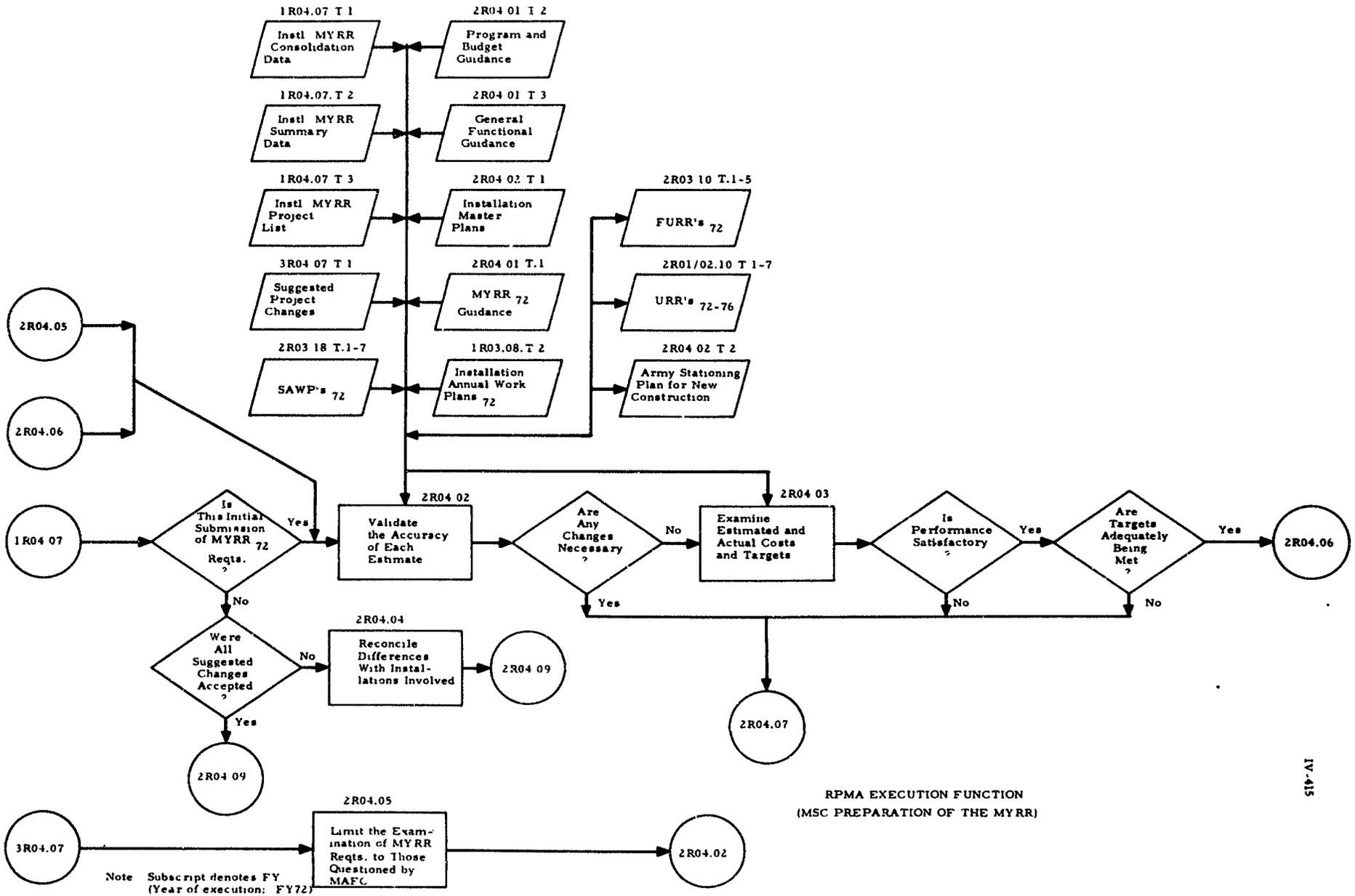

RPMA EXECUTION FUNCTION
(MSC PREPARATION OF THE MYRR)

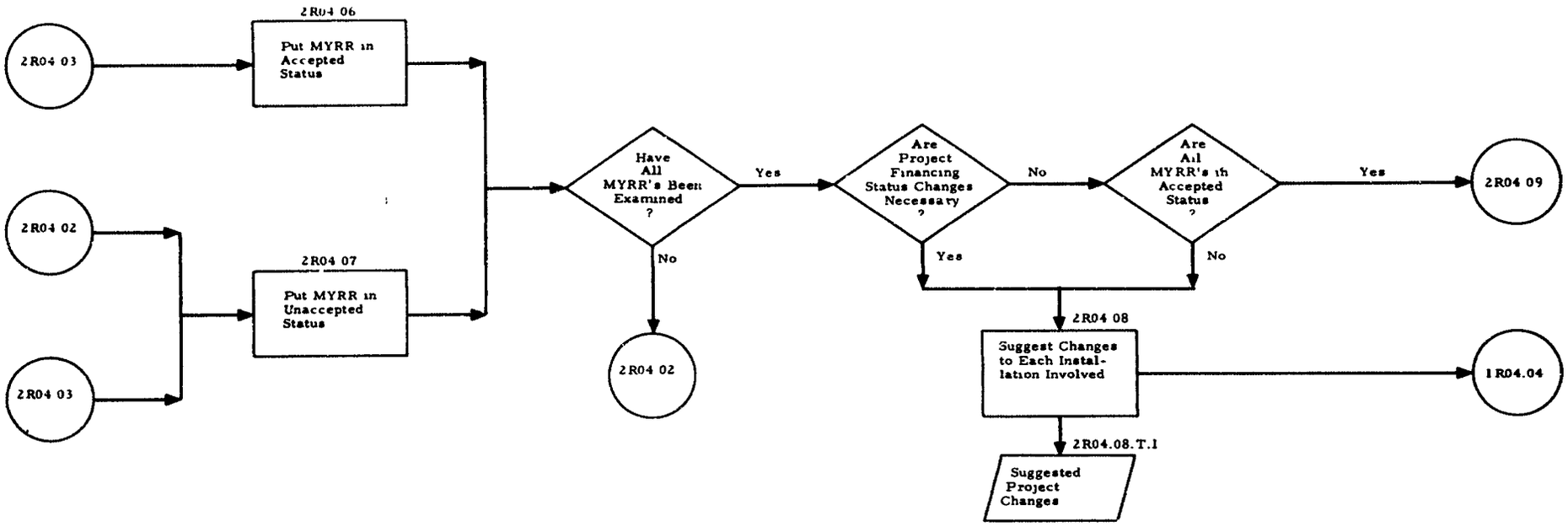

RPMA EXECUTION FUNCTION
(MSC PREPARATION OF THE MYRR)

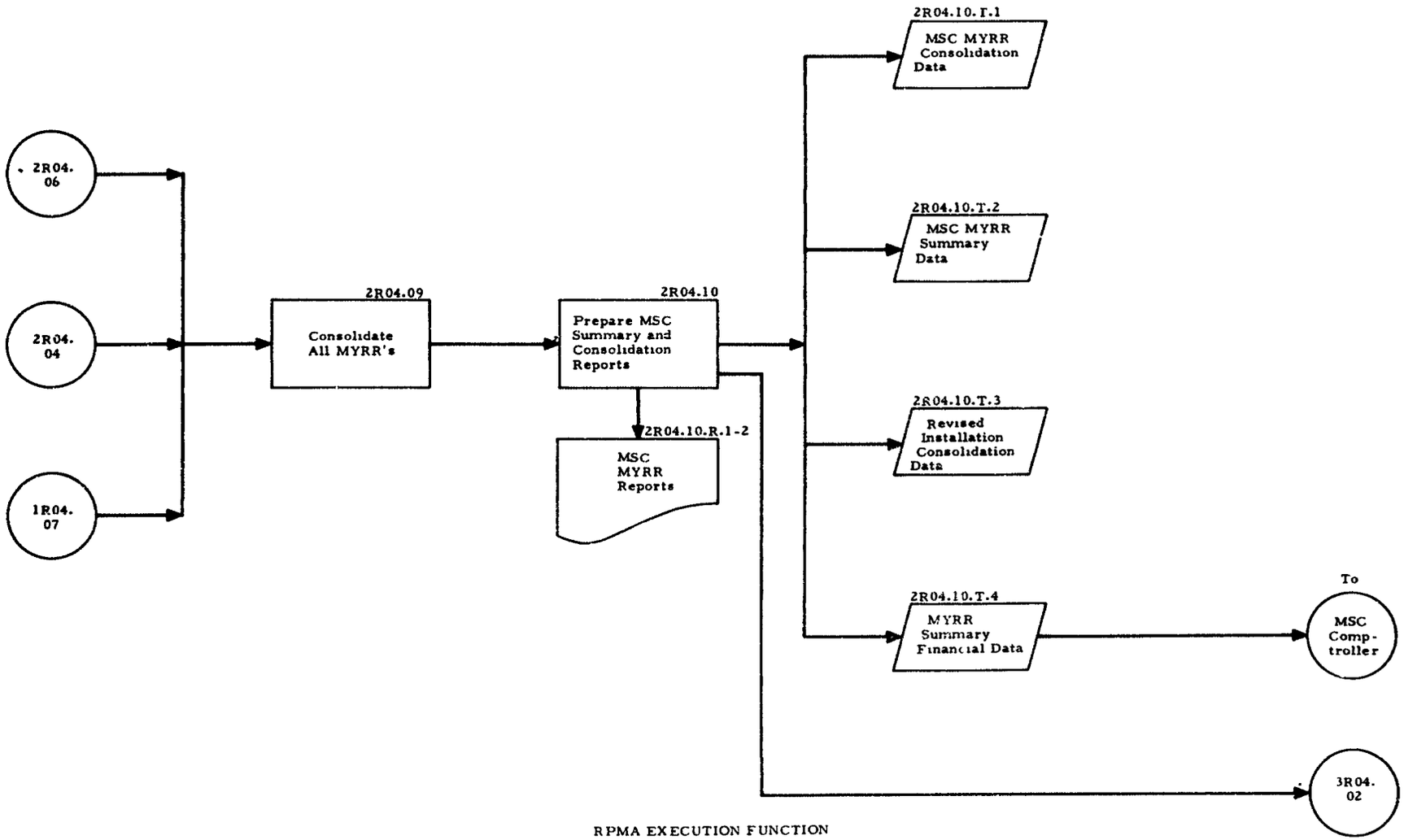

RPMA EXECUTION FUNCTION
(MSC PREPARATION OF THE MYRR)

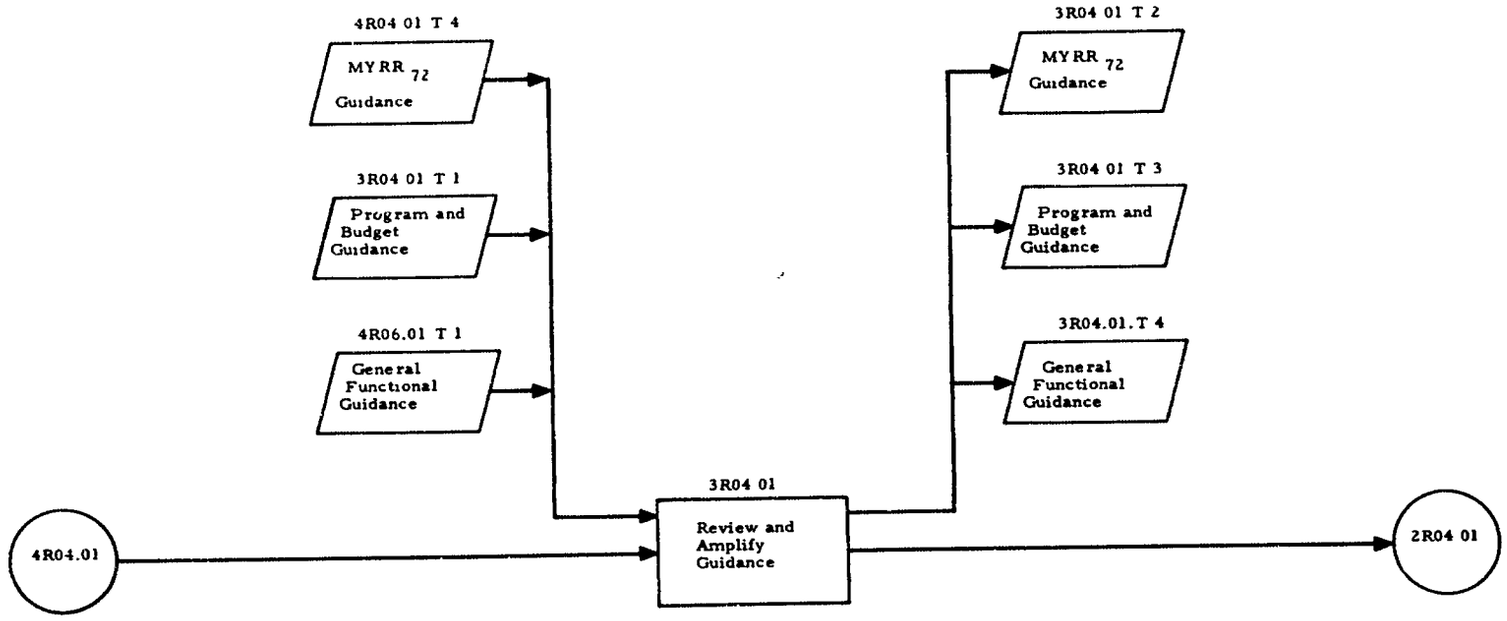

Note: Subscript denotes FY
(Year of execution: FY72)

RPMA EXECUTION FUNCTION
(MAFC PREPARATION OF THE MYRR)

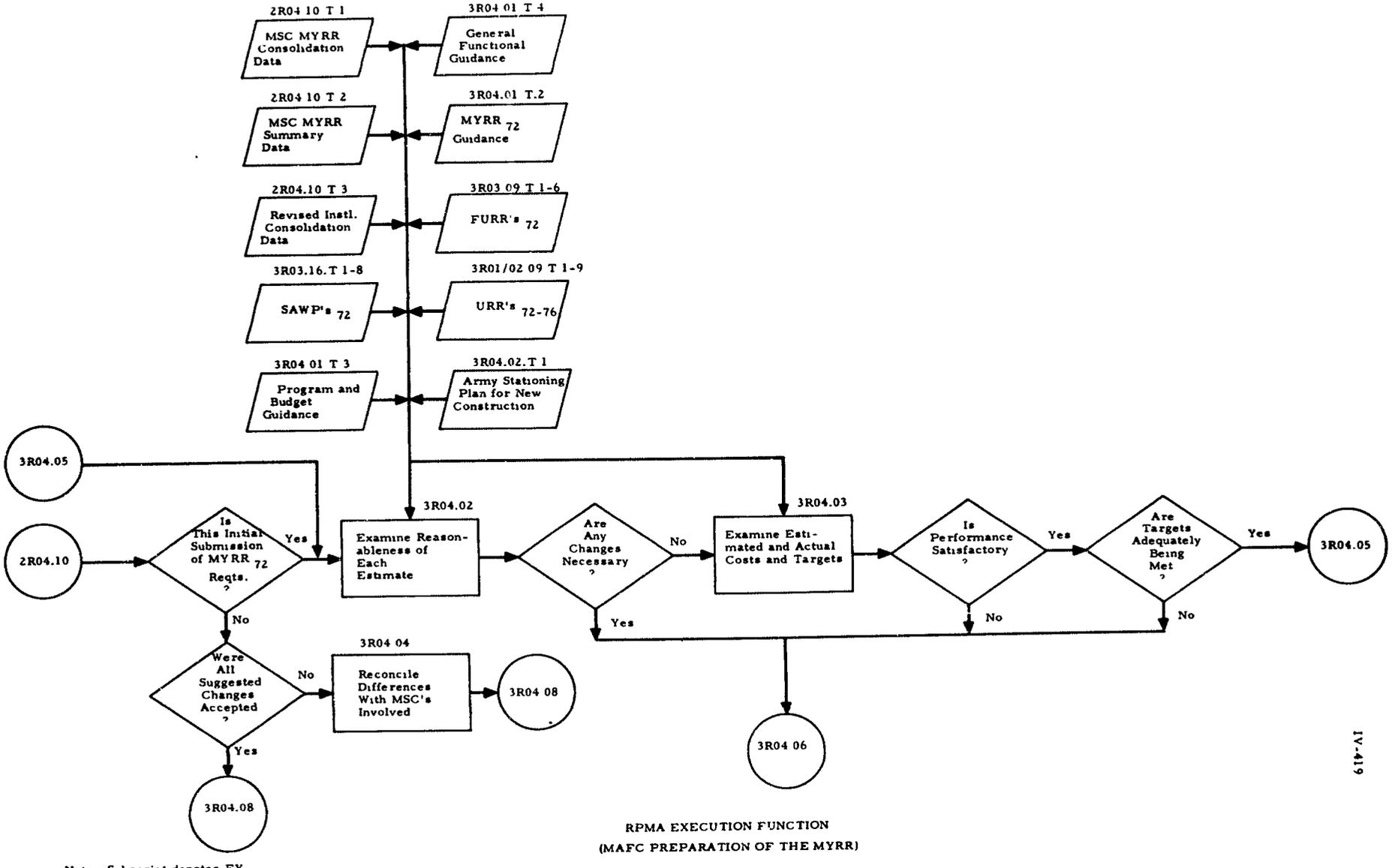

RPMA EXECUTION FUNCTION
(MAFC PREPARATION OF THE MYRR)

Note: Subscript denotes FY.
(Year of execution: FY72)

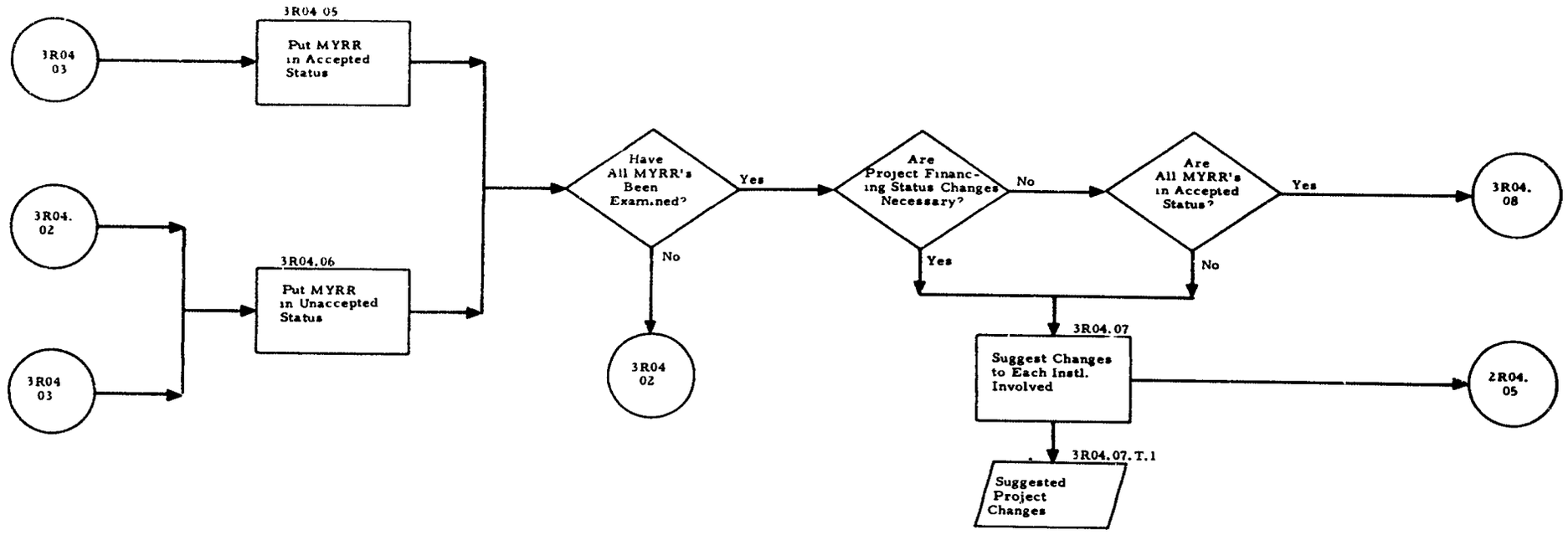

RPMA EXECUTION FUNCTION
(MAFC PREPARATION OF THE MYRR)

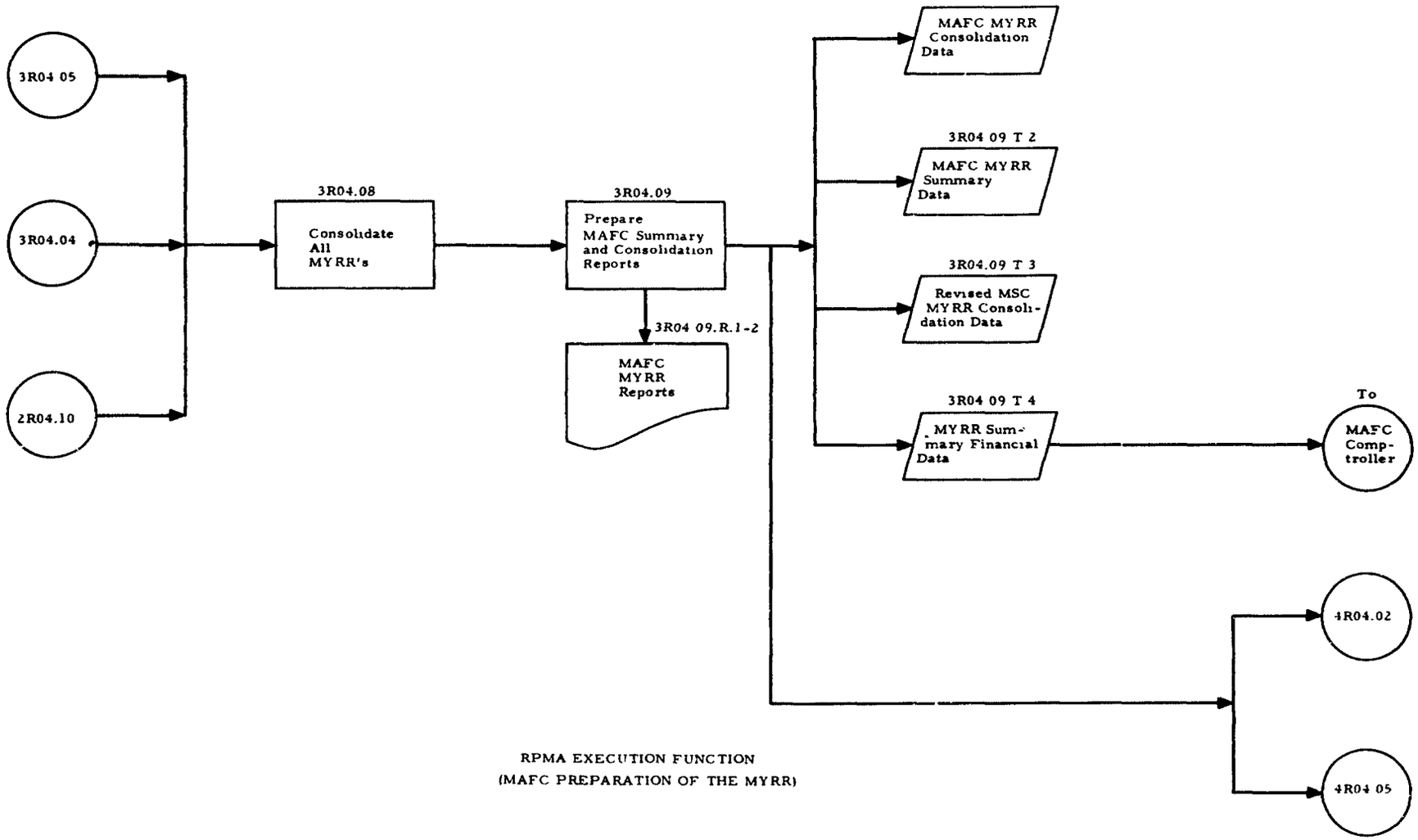

RPMA EXECUTION FUNCTION
(MAFC PREPARATION OF THE MYRR)

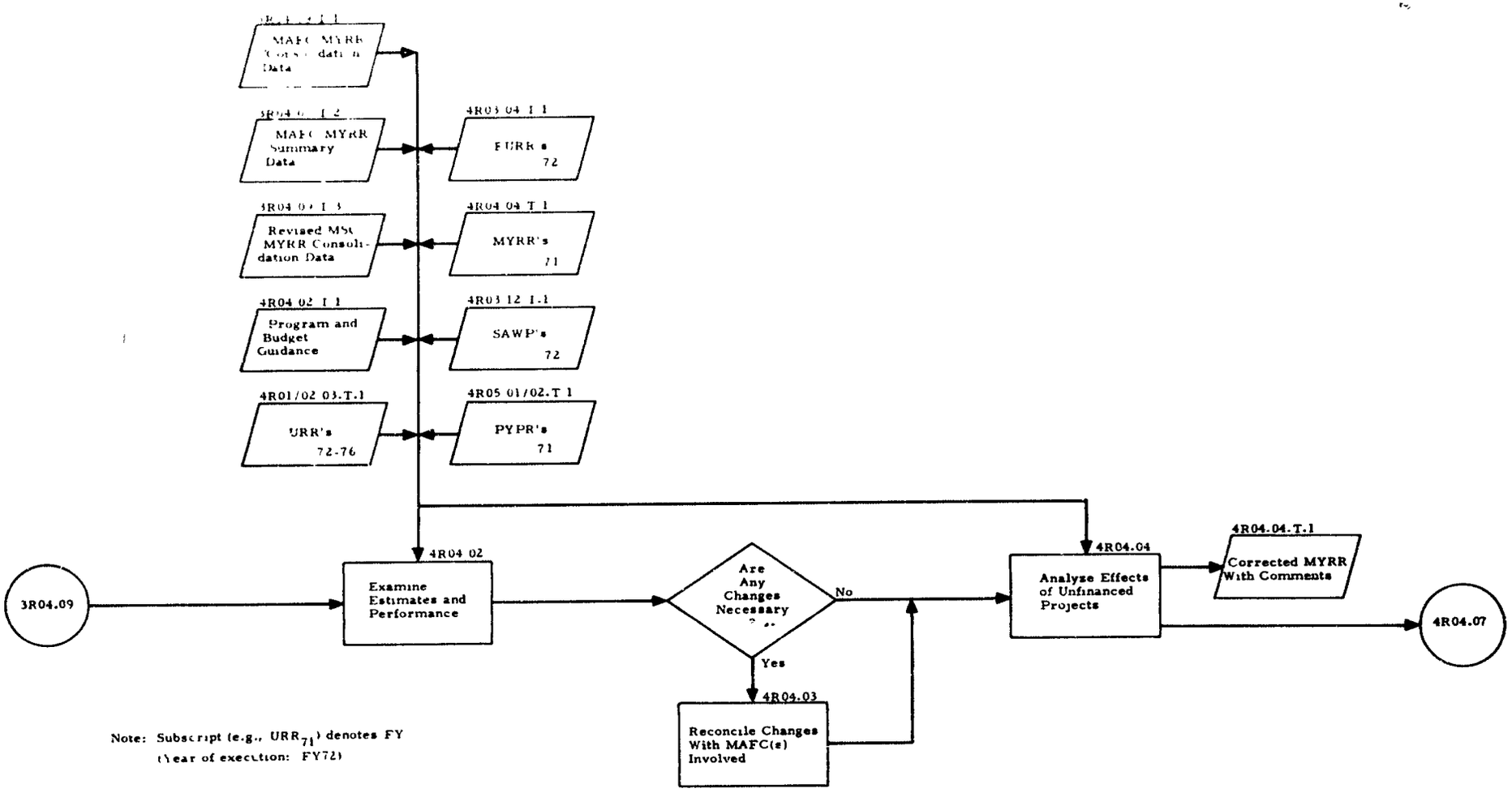

Note: Subscript (e.g., URR_{71}) denotes FY (Year of execution: FY72)

RPMA EXECUTION FUNCTION
(OCE PROCESSING OF THE MYRR)

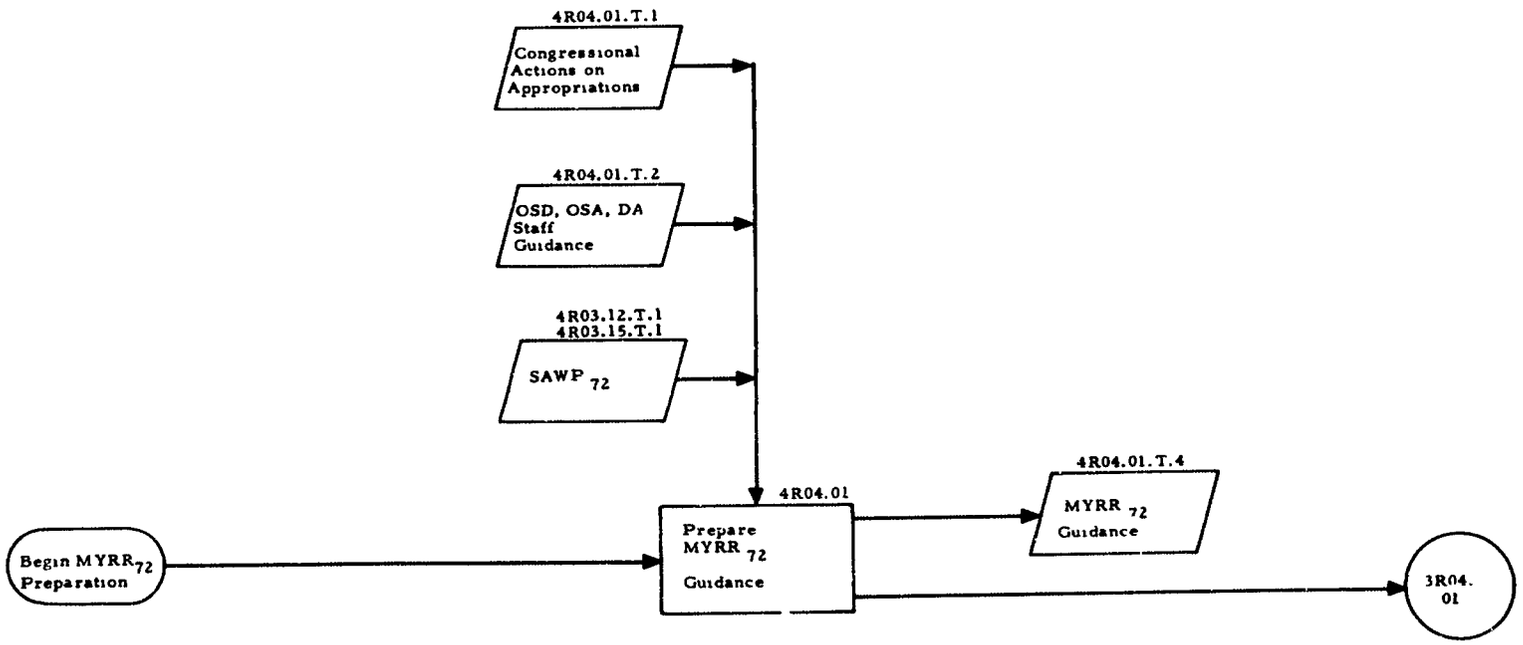

Note: Subscript (e.g., URR $_{71}$) denotes FY.
(Year of execution: FY72)

RPMA EXECUTION FUNCTION
(RPMAO PROCESSING OF THE MYRR)

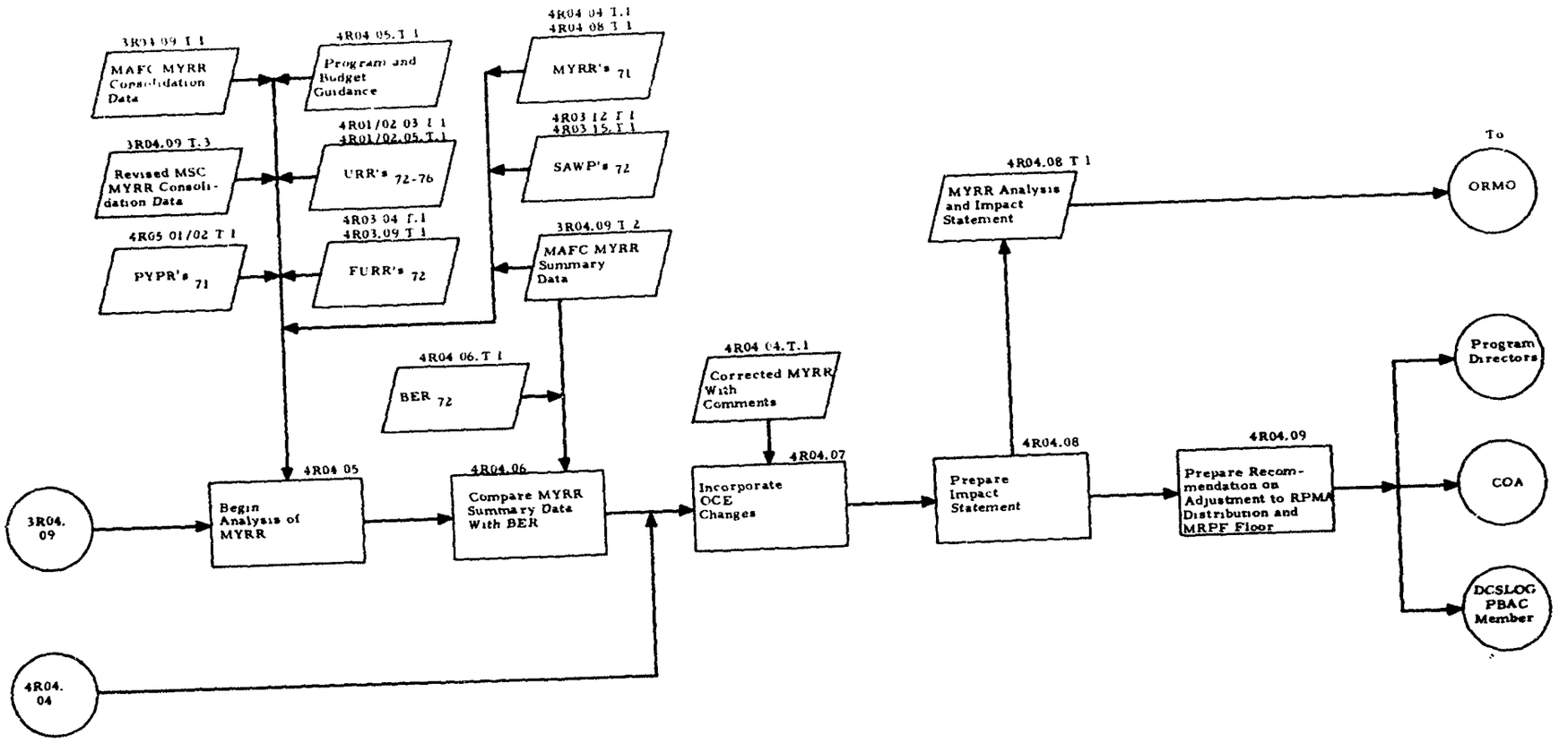

Note: Subscript (e.g., URR $_{71}$) denotes FY.
(Year of execution: FY72)

RPMA EXECUTION FUNCTION
(RPMAO PROCESSING OF THE MYRR)

OPERATION LOGIC

Operation Name:

Compute Actual Costs

CODE: 1R04.01.__

Dollars expended to date should be compiled to enable visualization of post engineering activities to date. This information is put in the work management data file. Reference should be made to all applicable documents that are used as guidance for this activity.

Inputs Described Elsewhere

1R03.08.7	AWP 72
1R01/02.4	URR 72-76
1R03.06.7	FURR 72
1R03.12	SAWP 72
2R04.08.11	Suggested project changes

INPUT/OUTPUT DATA DESCRIPTION

☒ Input Name Work Management Data	OP CODE	1 R 0 4 . 0 1
☐ Output Name	FLOW CHART REF	1 R 0 4 . 0 1 . T . . 1

Description:

The work management data elements required during the execution phase are listed below. Refer to the MYRR to determine the context within which these elements are used.

Source (if user input) ☒ Work Management System

Destination (if output) ☐

Data Elements Contained

Data Element Name	Description or Reference
Condition rating	
Contract $ cost	
Data class	
Dollars earned	
Equipment acquisition $ cost	
Equipment rental cost	
Equipment type	
Functional category	
Labor $ cost	
Material and supplies $ cost	
Narrative title	
Number of units	
Priority class	

Remarks:

INPUT/OUTPUT DATA DESCRIPTION (Continued)

☒ Input Name	Work Management Data	OP CODE	1 R 0 4 . 0 1
☐ Output Name		FLOW CHART REF	1 R 0 4 . 0 1 . T . . 1

Data Elements Contained

Data Element Name	Description or Reference
Review period	
Status	
Total $ cost	
Type of work	
Unit cost	
Unit of measure	
User/program element/program	
Work accomplishment	

INPUT/OUTPUT DATA DESCRIPTION

☒ Input Name ☐ Output Name	Purchase Costs (Material and Supplies)	OP CODE	1 R 0 4 . 0 1
		FLOW CHART REF	1 R 0 4 . 0 1 . T . . . 2

Description:

The post engineer retains all information relative to the purchase prices for all materials and supplies bought during the first quarter. This information is useful for reprogramming because it would reflect current market prices.

Source (if user input) ☒ 1R04.01

Destination (if output) ☐

Data Elements Contained

Data Element Name	Reference
Material and supplies $ required Unit cost Unit of measure Number of units	

Remarks:

OPERATION LOGIC

Operation Name:
Project Costs for Remainder of Year

CODE: 1 R 0 4 . 0 2

Using the information on funds expended to date, expected expenditures should be projected. This is done with the assistance of program and budget guidance . Knowing what was planned on the SAWP and what was actually done, the projection or reprogramming activity can be accomplished.

Inputs Described Elsewhere

2R04.01.T.1	MYRR 72 guidance
2R04.01.T.2	Program and budget guidance
2R04.01.T.3	General functional guidance

INPUT/OUTPUT DATA DESCRIPTION

☐ Input Name	MYRR	OP CODE	1R04.02
☒ Output Name	Input	FLOW CHART REF	1R04.02.T__.1

Description:

The data that show the actual costs for the first quarter and the projected costs for the remaining quarters are compiled for review and consolidation purposes.

Source (if user input) ☐

Destination (if output) ☒ 1R04.03

Data Elements Contained

Data Element Name	Reference
MYRR data description sheet	

Remarks:

OPERATION LOGIC

Operation Name:
Consolidate and Order all Projects/Requirements

CODE: 1 R 0 4 . 0 3

Once the installation reviews its projects and other requirements, it consolidates and orders all projects and other requirements.

Inputs Described Elsewhere

2R04.01.T.1	MYRR 72 guidance
2R04.01.T.2	Program and budget guidance
2R04.01.T.3	General functional guidance
1R04.02.T.1	MYRR input

OPERATION LOGIC

Operation Name:
Limit the Examination of MYRR Requirements to Those Questioned by MSC

CODE: 1 R 0 4 . 0 4

Once the MSC has examined the MYRR, the installation reexamines its MYRR on an exception basis, reconsidering only those requirements questioned by the MSC.

OPERATION LOGIC

Operation Name:

Prepare Impact Statement

CODE: 1 R 0 4 . 0 5

After separating RPMA into projected and unfinanced requirements, impact statements are prepared concerning the unfinanced requirements. These impact statements enable the MSC to more fully understand the end results of unfinancing some RPMA requirements. These statements can be forwarded by the MSC to influence decisions at MAFC and HQ DA.

OPERATION LOGIC

Operation Name:
Prepare MYRR Summary, Consolidation and Project List Reports

CODE: 1 R 0 4 0 6

The Work Coordinating Office prepares the MYRR summary, which furnishes data to the MSC and summarizes financial data for the comptroller.

REPORT DESCRIPTION - PART A

Report Name:

Installation MYRR Reports

FLOW CHART REF: 1 R 0 4 0 6 . R 1-3

Description:

See: 1R04.07.T.1 Installation MYRR consolidation data
1R04.07.T.2 Installation MYRR summary data
1R04.07.T.3 Installation MYRR project list

Estimated Number of Pages:

6

Suggested Frequency:

Annual

Trigger(s) for Report Production:

Budget Execution Review Guidance

Required Response Time:

45 working days from installation to HQ DA

Selection and Summarization Options:

OPERATION LOGIC

Operation Name:

Approve Installation MYRR

CODE: 1 R 0 4 . 0 7

After the post engineer prepares the MYRR summary, consolidation, and projects list (1R04.06), the installation commander reviews the reports and, using his management tools, approves the installation MYRR.

INPUT/OUTPUT DATA DESCRIPTION

☐ Input Name	OP CODE	1 R 0 4 . 0 7
☒ Output Name Installation MYRR Consolidation Data	FLOW CHART REF	1 R 0 4 . 0 7 . T _ _ . 1

Description:

The installation prepares a consolidation of its MYRR, including expenses broken down by fiscal-year quarter as they relate to the functional categories. The functional categories are broken down to show actual and reprogramed expenses as well as the scheduled expenses shown on SAWP.

Source (if user input) ☐

Destination (if output) ☒ 2R04.02

Data Elements Contained

Data Element Name	Reference
Fiscal year quarter	
Contract $ required	
Work accomplishment	
Total $ required	
Material and supplies $ cost	
Equipment acquisition $ cost	
Equipment rental cost	
Unfunded cost	

Remarks:

INPUT/OUTPUT DATA DESCRIPTION

☐ Input Name		OP CODE	1 R 0 4 . 0 7
☒ Output Name	Installation MYRR Summary Data	FLOW CHART REF	1 R 0 4 . 0 7 . T . . . 2

Description:
The installation prepares a summary of its MYRR that includes expense, performance, and condition information as it relates to each functional category. The functional categories are subdivided to show details.

Source (if user input) ☐

Destination (if output) ☒ 2R04.02

Data Elements Contained

Data Element Name	Reference
Unit of measure	
Number of units	
Contract $ required	
Work accomplishment	
Total $ required	
Material and supplies $ cost	
Equipment acquisition $ cost	
Equipment rental cost	
Per capita usage	
Priority class	
Condition rating	

Remarks:

INPUT/OUTPUT DATA DESCRIPTION

☐ Input Name		OP CODE	1 R 0 4 . 0 7
☒ Output Name	Installation MYRR Project List	FLOW CHART REF	1 R 0 4 . 0 7 . T . . . 3

Description:

Projects are listed that have been approved by the installation commander for continuation or initiation during the remaining quarters of the year of execution.

Source (if user input) ☐

Destination (if output) ☒ 2R04.02

Data Elements Contained

Data Element Name	Reference
User/program element/program	
Narrative description	
Type of work	
Unit of measure	
Number of units	
Funded cost	
Unfunded cost	
Priority class	

Remarks:

INPUT/OUTPUT DATA DESCRIPTION

☐ Input Name	OP CODE	1 R 0 4 . 0 7
☒ Output Name Work Management Data	FLOW CHART REF	1 R 0 4 . 0 7 . T _ _ . 4

Description:

The work management data file is updated to reflect all man-made decisions and to show how the reprogramming activity looks.

Source (if user input) ☐

Destination (if output) ☒ Work management data file

Data Elements Contained

Data Element Name	Reference
See 1RO4.01.T.1.	See Section V.

Remarks:

INPUT/OUTPUT DATA DESCRIPTION

☐ Input Name	OP CODE	1 R 0 4 . 0 7
☒ Output Name MYRR Summary Financial Data	FLOW CHART REF	1 R 0 4 . 0 7 . T _ _ . 5

Description:

The installation prepares a summary of financial data that shows expenses grouped by functional category. These data go to the installation comptroller.

Source (if user input) ☐

Destination (if output) ☒ Installation comptroller

Data Elements Contained

Data Element Name	Reference
Total $ cost	

Remarks:

OPERATION LOGIC

Operation Name:

Review and Amplify Guidance

CODE: 2 R 0 4 . 0 1

The MSC reviews and examines the guidance generated by the MAFC and includes these factors in generating its MYRR guidance to the installations. The MAFC program and budget guidance and general functional guidance are also reviewed and incorporated into installation guidance.

Inputs Described Elsewhere

3R04.01.T.2	$MYRR_{72}$ guidance
3R04.01.T.3	Program and budget guidance
3R04.01.T.4	General functional guidance

Outputs Described Elsewhere

2R04.01.T.2	$MYRR_{72}$ guidance
2R04.01.T.3	Program and budget guidance
2R04.01.T.4	General functional guidance

OPERATION LOGIC

Operation Name:

Accuracy of Each Estimate

CODE: 2 R 0 4 . 0 2

The MSC examines each MYRR project and other requirement, based on the input documents and guidance indicated on the flow chart. The MSC examines the projects and other requirements in light of projected mission changes whose facilities' impact should have been taken into account, in light of previous unit costs and based on their judgment and knowledge of Army area activities and installations. Questions and suggested changes are identified.

Inputs Described Elsewhere

1R03.08.T.2	Instl annual work plans$_{72}$
1R04.07.T.1	Instl MYRR consolidation data
1R04.07.T.2	Instl MYRR summary data
1R04.07.T.3	Instl MYRR project list
2R01/02.10.T.1-7	URR$_{72-76}$
2R03.10.T.1-5	FURR$_{72}$
2R03.18.T.1-7	SAWP$_{72}$
2R04.01.T.1	MYRR$_{72}$ guidance
2R04.01.T.2	Program and budget guidance
2R04.01.T.3	General functional guidance
3R04.01.T.1	Suggested project changes

INPUT/OUTPUT DATA DESCRIPTION

[x] Input Name	Installation Master Plan	OP CODE	2 R 0 4 . 0 2
[ ] Output Name		FLOW CHART REF	2 R 0 4 . 0 2 . T . . . 1

Description:

The installation master plan is maintained at all permanent Army installations. It consists of site maps, the building information schedule, the tabulation of existing and required facilities, and several analytical reports. Master planning is covered by AR 210-20. It assists in installation development by allowing coordination of facility siting, utility distribution systems, etc.

Source (if user input) [x] Post engineer

Destination (if output) [ ]

Data Elements Contained

Data Element Name	Reference
	AR 210-20

Remarks:

INPUT/OUTPUT DATA DESCRIPTION

[x] Input Name	Army Stationing Plan for New Construction	OP CODE	2 R 0 4 . 0 2
[ ] Output Name		FLOW CHART REF	2 R 0 4 . 0 2 . T _ _ . 2

Description:

This is the proposed replacement for the current stationing plan for permanent construction. It includes planning information for semipermanent and temporary construction and information on the types of units involved in an installation's stationing plan.

Source (if user input) [x] 4C01.03

Destination (if output) [ ]

Data Elements Contained

Data Element Name	Reference
	PRC R-1207, Vol. IV, Section III B.1

Remarks:

OPERATION LOGIC

Operation Name:
Examine Estimated and Actual Costs and Targets

CODE: 2 R 0 4 . 0 3

After examining the MYRR, the MSC may have to request or suggest changes to the installation. Installation response, which should concern only areas of the MYRR questioned by the MSC, can be in the form of recomputing and revalidating.

Inputs Discussed Elsewhere

1R03.08.T.2	AWP_{72}
1R04.07.T.1	Instl MYRR consolidation data
1R04.07.T.2	Instl MYRR summary data
1R04.07.T.3	Instl project list
2R01/02.10.T.1-7	URR_{72-76}
2R03.10.T.1-5	$FURR_{72}$
2R03.18.T.1-7	$SAWP_{72}$
2R04.01.T.1	$MYRR_{72}$ guidance
2R04.01.T.2	Program and budget guidance
2R04.01.T.3	General functional guidance
2R04.02.T.1	Instl master plan
2R04.02.T.2	Army stationing plan for new construction
3R04.07.T.1	Suggested project changes

OPERATION LOGIC

Operation Name:
Reconcile Differences With Installations Involved

CODE: 2 R 0 4 0 4

MSC and installation reconcile their differences over suggested changes and questions raised by the MSC.

OPERATION LOGIC

Operation Name:
Limit the Examination of MYRR to Those Questioned by MAFC

CODE: 2 R 0 4 . 0 5

The MSC reexamines its MYRR on an exception basis, reconsidering only those requirements questioned by the MAFC.

OPERATION LOGIC

Operation Name:
Put MYRR in Accepted Status

CODE: 2 R 0 4 0 6

After examination of the MYRR projects and other requirements, if the priorities and order of projects are correct and if no other changes are necessary in the projects or other requirements, they are placed in an accepted status.

OPERATION LOGIC

Operation Name:

Put MYRR in Unaccepted Status

CODE: 2 R 0 4 . 0 7

Those projects and other requirements for which there are suggested changes or questions are placed in an unaccepted status.

OPERATION LOGIC

Operation Name:
Suggest Changes to Each Installation Involved

CODE: 2 R 0 4 . 0 8

The MSC suggests changes to each installation that requires additions, deletions, or other modifications.

INPUT/OUTPUT DATA DESCRIPTION

☐ Input Name	OP CODE	2 R 0 4 . 0 8
☒ Output Name Suggested Project Changes	FLOW CHART REF	2 R 0 4 . 0 8 . T . . . 1

Description:

Whenever project financing status changes or mission objectives of the installation are altered by higher echelons, a list of suggested project changes is generated to assist the reconciliation of differences.

Source (if user input) ☐

Destination (if output) ☒ 1R04.01

Data Elements Contained

Data Element Name	Reference
Priority class	
Status	
User/program element/program	
Functional category	
Work accomplishment	

Remarks:

OPERATION LOGIC

Operation Name:
Consolidate and Order MYRR's

CODE: 2 R 0 4 . 0 9

Once all differences between MSC and installations are reconciled, the MSC consolidates and orders all MYRR's from the installations into a command-wide report.

OPERATION LOGIC

Operation Name:
Prepare MSC Summary and Consolidation Reports

CODE: 2 R 0 4 1 0

From the installation's MYRR's, and the consolidated MSC MYRR, the MSC prepares a summary, by functional category, of the consolidated MSC requirements.

After approval by the MSC commanding officer, the MSC forwards (1) the MYRR summary, and (2) backup of the consolidated MSC MYRR, both command wide and by program element or user.

INPUT/OUTPUT DATA DESCRIPTION

☐ Input Name	MSC MYRR	OP CODE	2 R 0 4 . 1 0
☒ Output Name	Consolidation Data	FLOW CHART REF	2 R 0 4 . 1 0 . T . . 1

Description:

After reviewing the installation's MYRR's and reconciling all changes, the MSC consolidates all installation MYRR consolidation data and generates its own consolidation formatted as was the installation's consolidation.

Source (if user input) ☐

Destination (if output) ☒ 3R04.02
3R04.03

Data Elements Contained

Data Element Name	Reference

Remarks:

INPUT/OUTPUT DATA DESCRIPTION

☐ Input Name		OP CODE	2 R 0 4 . 1 0
☒ Output Name	MSC MYRR Summary Data	FLOW CHART REF	2 R 0 4 1 0 T 2

Description:

The MSC prepares a summary of its installation MYRR summaries. The format is the same as that used by the installation.

Source (if user input) ☐

Destination (if output) ☒ 3R04.02
3R04.03

Data Elements Contained

Data Element Name	Reference

Remarks:

INPUT/OUTPUT DATA DESCRIPTION

☐ Input Name	Revised Installation	OP CODE	2 R 0 4 . 1 0
☒ Output Name	Consolidation Data	FLOW CHART REF	2 R 0 4 . 1 0 . T . . . 3

Description:

The MSC generates revised consolidation data that reflect any change not shown on the original installation consolidation sheets.

Source (if user input) ☐

Destination (if output) ☒ 3R04.02
3R04.03

Data Elements Contained

Data Element Name	Reference

Remarks:

INPUT/OUTPUT DATA DESCRIPTION

☐ Input Name		OP CODE	2 R 0 4 . 1 0
☒ Output Name	MYRR Summary of Financial Data	FLOW CHART REF	2 R 0 4 . 1 0 . T _ _ . 4

Description:

The MSC prepares a summary of financial data that shows expenses grouped by functional category. These data go to the comptroller.

Source (if user input) ☐

Destination (if output) ☒ MSC comptroller

Data Elements Contained

Data Element Name	Reference
Total $ cost	

Remarks:

REPORT DESCRIPTION - PART A

Report Name:

MSC MYRR Reports

FLOW CHART REF: 2 R 0 4 . 1 0 . R 1-2

Description:

See: 2R04.10.T.1 MSC MYRR consolidation data
2R04.10.T.2 MSC MYRR summary data

Estimated Number of Pages:

12

Suggested Frequency:

Annual

Trigger(s) for Report Production:

Budget Execution Review Guidance
Receipt of Installation MYRR

Required Response Time:

45 working days from installation to HQ DA

Selection and Summarization Options:

OPERATION LOGIC

Operation Name:

Review and Amplify Guidance

CODE: 3 R 0 4 . 0 1

The MAFC performs the same functions discussed in 2R04.01. It receives guidance from DA.

Inputs Described Elsewhere

4R04.01.T.4	MYRR guidance
4R06.01.T.1	General functional guidance

Outputs Described Elsewhere

3R04.01.T.2	MYRR guidance
3R04.01.T.1	Program and budget guidance
3R04.01.T.4	General functional guidance

INPUT/OUTPUT DATA DESCRIPTION

[x] Input Name [ ] Output Name	Program and Budget Guidance	OP CODE	3 R 0 4 . 0 1
		FLOW CHART REF	3 R 0 4 . 0 1 . T . . 1

Description:

Contains dollar guidance for preparation of command budgets and for reprograming activities.

Source (if user input) [ ]

Destination (if output) [ ]

Data Elements Contained

Data Element Name	Reference
Functional category	
Funded cost	
Unfunded cost	
Appropriation	
User/program element/program	
Status of financing	
Financing type	
OMA subappropriation	
FHMA subappropriation	
RDT&E subappropriation	

Remarks:

OPERATION LOGIC

Operation Name:

Examine Reasonableness of Each Estimate

CODE: 3 R 0 4 . 0 2

The MSC examines each MYRR estimate based on the input documents and guidance indicated on the flow chart. The MSC examines the requirements in light of projected mission changes whose facilities impact should have been taken into account, in light of previous unit costs and based on these judgments and knowledge of Army area activities and installations. Questions and suggested changes are identified.

Inputs Described Elsewhere

2R04.10.T.1	MSC MYRR consolidation data
2R04.10.T.2	MSC MYRR summary data
2R04.10.T.3	Revised instl consolidation data
3R03.16.T.1-8	$SAWP_{72}$
3R04.01.T.3	Program and budget guidance
3R04.01.T.4	General functional guidance
3R04.01.T.2	MYRR guidance
3R03.09.T.1-6	$FURR_{72}$
3R01/02.09.T.1-9	URR_{72-76}
3R04.02.T.2	Army stationing plan new consolidation (see 2R04.02.T.2)

OPERATION LOGIC

Operation Name:

Examine Estimated and Actual Costs and Targets

CODE: 3 R 0 4 . 0 3

Once the MAFC has examined the MYRR and raised questions with the MSC, the MSC reexamines its MYRR on an exception basis, reconsidering only those requirements questioned by the MAFC.

Inputs Described Elsewhere

Same as 3R04.02

OPERATION LOGIC

Operation Name: Reconcile Differences With MSC's Involved

CODE: 3 R 0 4 . 0 4

MAFC and MSC reconcile their differences over suggested changes and questions raised by the MAFC.

OPERATION LOGIC

Operation Name:

Put MYRR in Accepted Status

CODE: 3 R 0 4 . 0 5

After examining the MYRR expenditures and reprograming activity, if the priorities, if order of projects is correct, and if no other changes are necessary in the projects or other requirements, they are placed in an accepted status.

OPERATION LOGIC

Operation Name: Put MYRR in Unaccepted Status

CODE: 3 R 0 4 . 0 6

Projects and other requirements for which there are suggested changes or questions are placed in an unaccepted status.

OPERATION LOGIC

Operation Name: Suggest Changes to each Installation Involved

CODE: 3 R 0 4 . 0 7

The MAFC suggests changes to each installation that requires additions, deletions, or other modifications.

Outputs Described Elsewhere

3R04.08.T.1 Suggested project changes (see 2R04.08.T.1)

OPERATION LOGIC

Operation Name:

Consolidate and Order all MYRR's

CODE: 3 R 0 4 . 0 8

Once all differences between MAFC and MSC are reconciled, the MAFC consolidates and orders all MYRR's from the MSC into a command-wide report.

OPERATION LOGIC

Operation Name:

Prepare MAFC Summary of MSCs' MYRR's

CODE: 3 R 0 4 . 0 9

From the MSCs' MYRR's and the consolidated MAFC MYRR's, the MAFC prepares a summary, by functional category, of the consolidated MAFC expenditures and reprograming activity.

After approval by the MAFC commanding officer, the MAFC forwards (1) the MYRR summary, and (2) backup of the consolidated MAFC MYRR, both command-wide and by program element or user. The MSCs' summary MYRR is also forwarded.

INPUT/OUTPUT DATA DESCRIPTION

☐ Input Name ☒ Output Name	MAFC, MYRR Consolidation Data	OP CODE	3R04.09
		FLOW CHART REF	3R04.09.T__.1

Description:

After reviewing the MSCs' MYRR's and reconciling all changes, the MAFC consolidates all MSC MYRR consolidation data and generates its own.

Source (if user input) ☐

Destination (if output) ☒ 4R04.02
4R04.04
4R04.05

Data Elements Contained

Data Element Name	Reference

Remarks:

INPUT/OUTPUT DATA DESCRIPTION

☐ Input Name ☒ Output Name	MAFC MYRR Summary Data	OP CODE	3 R 0 4 . 0 9
		FLOW CHART REF	3 R 0 4 . 0 9 . T . . 2

Description:

The MAFC prepares a summary of all its reporting MSCs' MYRR summaries. The format is the same as that used by the MSC.

Source (if user input) ☐

Destination (if output) ☒

4R04.02
4R04.04
4R04.05
4R04.06

Data Elements Contained

Data Element Name	Reference

Remarks:

INPUT/OUTPUT DATA DESCRIPTION

☐ Input Name ☒ Output Name	Revised MSC MYRR Consolidation Data	OP CODE	3R04.09
		FLOW CHART REF	3R04.09.T__.3

Description:

The MAFC generates revised consolidation data that reflect changes now shown on the MSC's consolidation sheets.

Source (if user input) ☐

Destination (if output) ☒ 4R04.02
4R04.04
4R04.05

Data Elements Contained

Data Element Name	Reference

Remarks:

INPUT/OUTPUT DATA DESCRIPTION

☐ Input Name ☒ Output Name	MYRR Summary of Financial Data	OP CODE	3 R 0 4 . 0 9
		FLOW CHART REF	3 R 0 4 0 9 . T . . . 4

Description:

The MAFC generates a summary of financial data that shows expenses grouped by functional category.

Source (if user input) ☐

Destination (if output) ☒ MAFC Comptroller

Data Elements Contained

Data Element Name	Reference
Total $ cost	

Remarks:

REPORT DESCRIPTION - PART A

Report Name:

MAFC MYRR Reports

FLOW CHART REF: 3 R 0 4 . 0 9 . R 1-2

Description:

See: 3R04.09.T.1 MAFC MYRR consolidation data
3R04.09.T.2 MAFC MYRR summary data

Estimated Number of Pages:

35

Suggested Frequency:

Annual

Trigger(s) for Report Production:

Budget Execution Review Guidance
Receipt of MSC MYRR

Required Response Time:

45 working days from installation to HQ DA

Selection and Summarization Options:

OPERATION LOGIC

Operation Name:

Prepare MYRR Guidance

CODE: 4 R 0 4 . 0 1

RPMAO accepts inputs from OSD, OSA, and the DA staff in the form of guidance. This guidance is coupled with Congressional appropriation actions and the SAWP. RPMAO, in turn, after carefully reviewing the guidance and constraints, generates guidance for the lower echelons to handle and generate the MYRR.

Inputs Described Elsewhere

4R04.01.T.3 SAWP (see 1R03.12.T.1-5)

INPUT/OUTPUT DATA DESCRIPTION

☒ Input Name ☐ Output Name	Congressional Actions on Appropriations	OP CODE	4 R 0 4 . 0 1
		FLOW CHART REF	4 R 0 4 . 0 1 . T . . 1

Description:

Congress appropriates operation and maintenance funds and other funds to the RPMA program. After the Bureau of the Budget and the OSD Comptroller release these funds, they are apportioned through budget channels to MAFC's.

Source (if user input) ☒ U. S. Congress

Destination (if output) ☐

Data Elements Contained

Data Element Name	Reference
Appropriation	

Remarks:

INPUT/OUTPUT DATA DESCRIPTION

[x] Input Name [ ] Output Name	OSDA, OSA, DA Staff Guidance	OP CODE	4 R 0 4 . 0 1
		FLOW CHART REF	4 R 0 4 . 0 1 . T . . 2

Description:

See 4R03.01.T.3

Source (if user input) [x] OSD, OSA and DA staff

Destination (if output) [ ]

Data Elements Contained

Data Element Name	Reference
	4R03.01.T.3

Remarks:

INPUT/OUTPUT DATA DESCRIPTION

☐ Input Name MYRR Guidance ☒ Output Name	OP CODE	4 R 0 4 . 0 1
	FLOW CHART REF	4 R 0 4 0 1 T . . . 4

Description:
MYRR guidance is that portion of a guidance document from higher headquarters that relates to the preparation of the MYRR.

Source (if user input) ☐

Destination (if output) ☐

Data Elements Contained

Data Element Name	Reference
	URR guidance

Remarks:

OPERATION LOGIC

Operation Name:
Examine Estimates and Performance

CODE: 4 R 0 4 . 0 2

To visualize the first quarter's problems and what effect they will have on the remaining portion of the execution year, OCE should examine the performance portion of the MYRR and the reprograming estimates for the remaining quarters.

Inputs Described Elsewhere

3R04.09.T.1	MAFC MYRR consolidation data
3R04.09.T.2	MAFC MYRR summary data
3R04.09.T.3	Revised MSC MYRR consolidation data
4R01/02.03.T.1	URR_{72-76}
4R03.04.T.1	$FURR_{72}$
4R04.04.T.1	$MYRR_{71}$
4R03.12.T.1	$SAWP_{72}$
4R05.01/02.T.1	$PYPR_{71}$
4R04.02.T.1	Program and budget guidance (see 3R04.01.T.2)

OPERATION LOGIC

Operation Name:

Reconcile Changes with MAFC's Involved

CODE: 4 R 0 4 . 0 3

Upon completion of an analysis of MYRR, the Facilities Engineering Division of OCE reconciles any changes desired with the MAFC's involved. This may be an informal process, probably conducted by telephone, to reach agreement on the MYRR submitted by the MAFC. This operation should be coordinated with the RPMAO to insure that a similar operation 4R03.05 being completed by that office is not in conflict with OCE.

OPERATION LOGIC

Operation Name:

Analyze Effects of Unfinanced Projects

CODE: 4 R 0 4 . 0 4

As described in operation 4R03.03, this operation by the RPMAO is one of the most important operations in the RPMA reporting cycle. This analysis, supported by the OCE input, is of major importance in serving as a basis for impact statements provided to the program directors and other elements of the DA staff indicating the shortfalls in RPMA requirements due to unfinancing a portion of those requirements.

Inputs Described Elsewhere

Same as 4R04.02

INPUT/OUTPUT DATA DESCRIPTION

☐ Input Name ☒ Output Name	Corrected MYRR with Comments	OP CODE	4 R 0 4 . 0 4
		FLOW CHART REF	4 R 0 4 . 0 4 . T . . . 1

Description:
After examining MAFCs' MYRR's, OCE analyzes the effects of unfinanced projects and generates a corrected MYRR. These corrections are supported by dialog that substantiates the OCE charges.

Source (if user input) ☐

Destination (if output) ☒ 4K04.07

Data Elements Contained

Data Element Name	Reference

Remarks:

OPERATION LOGIC

Operation Name:
Begin Analysis of MYRR

CODE: 4 R 0 4 . 0 5

RPMAO receives various inputs from the lower echelons and then considers the MYRR with respect to the mission objectives and possible changes for the remaining quarters of the year of execution.

Inputs Described Elsewhere

3R04.09.T.1	MAFC MYRR consolidation data
3R04.09.T.3	Revised MSC MYRR consolidation data
4R05.01/02.T.1	$PYPR_{71}$
4R04.05.T.1	Program and budget guidance
4R01/02.03.T.1 4R01/02.05.T.1	URR_{72-76}
4R03.04.T.1 4R03.09.T.1	$FURR_{72}$
4R04.08.T.1 4R04.04.T.1	$MYRR_{71}$
4R03.12.T.1 4R03.15.T.1	$SAWP_{72}$
3R04.09.T.2	MAFC MYRR summary data

OPERATION LOGIC

Operation Name:

Compare MYRR Summary Data with BER

CODE: 4R04.06

The summary MYRR data is compared with the BER to determine what effect any mission changes or reprogramming actions will have on total remaining expenses.

Inputs Described Elsewhere

3R04.09.T.2 MAFC MYRR Summary data

INPUT/OUTPUT DATA DESCRIPTION

☒ Input Name	BER	OP CODE	4 R 0 4 . 0 6
☐ Output Name		FLOW CHART REF	4 R 0 4 0 6 . T . . . 1

Description:

The Budget Execution and Review (BER) contains information grouped by functional category.

Source (if user input) ☒ Comptroller

Destination (if output) ☐

Data Elements Contained

Data Element Name	Reference
Total $ cost	

Remarks:

OPERATION LOGIC

Operation Name:
Incorporate OCE Changes

CODE: 4 R 0 4 . 0 7

The RPMAO analysts use the OCE input (analysis and changes to the MYRR) in completing the analysis of the effects of expenditures and reprograming in the MYRR (operation 4R04.07). The OCE input is a marked-up copy of the MYRR and a narrative analysis of projects or requirements that impact on the provision of adequate maintenance of Army facilities.

Inputs Described Elsewhere

4R04.04.T.1 Corrected MYRR with comments

OPERATION LOGIC

Operation Name:

Prepare Impact Statement

CODE: 4 R 0 4 0 8

Impact statements prepared by the RPMAO provide the program directors and other elements of the DA staff the expected impact on the maintenance of Army facilities that could be expected from the level of RPMA funding indicated in the MYRR. The impact statements are similar in format to that used by OCE in providing an input to the RPMAO. The RPMAO prepares a summarized version of the MYRR, encompassing only that level of detail deemed necessary. A narrative analysis accompanies this format to provide the impact of the shortfalls indicated in the Army facilities maintenance picture.

INPUT/OUTPUT DATA DESCRIPTION

☐ Input Name ☒ Output Name	MYRR Analysis and Impact Statement	OP CODE	4 R 0 4 . 0 8
		FLOW CHART REF	4 R 0 4 0 8 T . . 1

Description:

The MYRR analysis and impact statement is sent to ORMO to show what effect the changes incorporated in the MYRR for the remaining portion of the year of execution will have on the mission objectives.

Source (if user input) ☐

Destination (if output) ☒ To ORMO

Data Elements Contained

Data Element Name	Reference
Narrative description User/program element/program Functional category Funded cost Unfunded cost	

Remarks:

OPERATION LOGIC

Operation Name:
Prepare Recommendation on Adjustment to RPMA Distribution and MRPF Floor

CODE: 4 R 0 4 . 0 9

Upon completion of the impact statement (4R04.08) RPMAO should generate a recommendations list to show what effect the unfinanced projects and requirements will have on the maintenance of real property floor. This list should be distributed to those concerned by the MRPF.

FUNCTION NARRATIVE (data flow through operations)

Function Name:	CODE: 1R05-4R05
Review	

The review function completes PPBER cycle. It serves as the basis for performance analysis and for evaluating the planning factors and projection techniques on which the original URR estimates are based. In the RPMA functional design, review is specifically concerned with the generation, submission, and analysis of the Prior Year Performance Report. The PYPR is generated at the installation from the post engineer's detailed operating and management records. It is submitted upward through command management channels. At each echelon, a set of echelon-summarized reports (exclusive of building component backup information) is added to the package submitted to the next higher echelon. The entire set of PYPR submissions is analyzed by OCE. The set is used as the basis for development of the Annual Summary of Operations (Red Book), performance reports to program directors, and performance reports to OSD. A subset of PYPR submissions, as indicated in the flow charts, is analyzed by RPMAO.

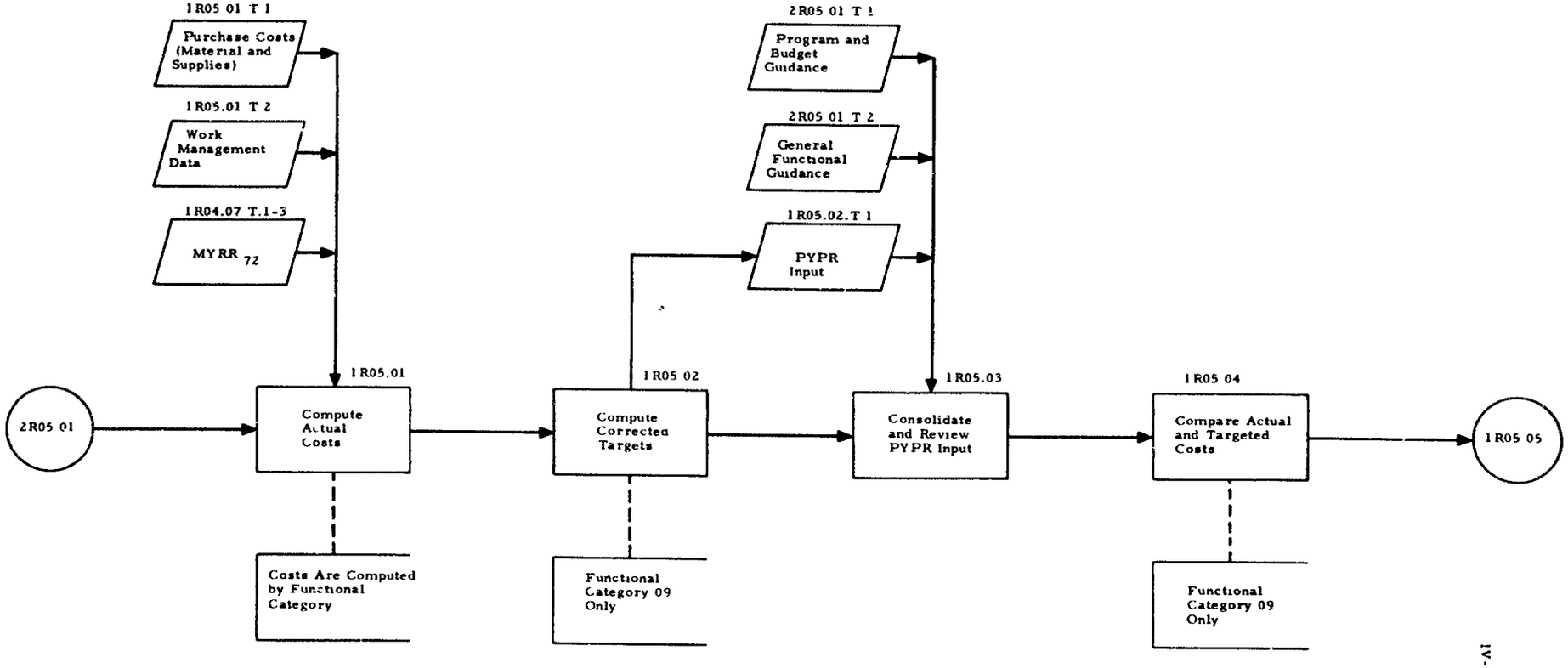

Note: Subscript (e g , URR_{71}) denotes FY (Year of execution. FY72)

RPMA REVIEW FUNCTION
(INSTALLATION PREPARATION OF THE PYPR)

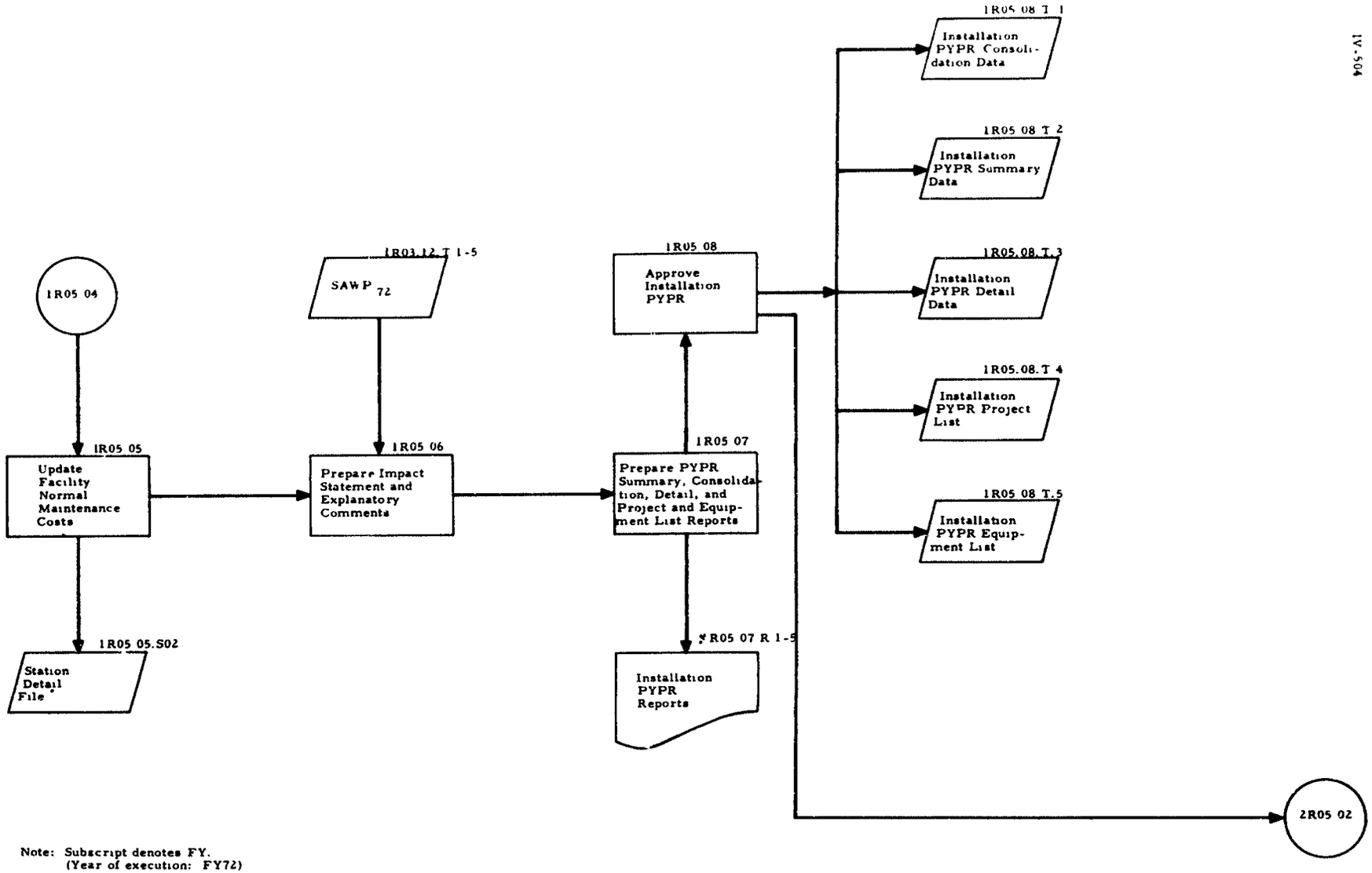

Note: Subscript denotes FY.
(Year of execution: FY72)

RPMA REVIEW FUNCTION
(INSTALLATION PREPARATION OF THE PYPR)

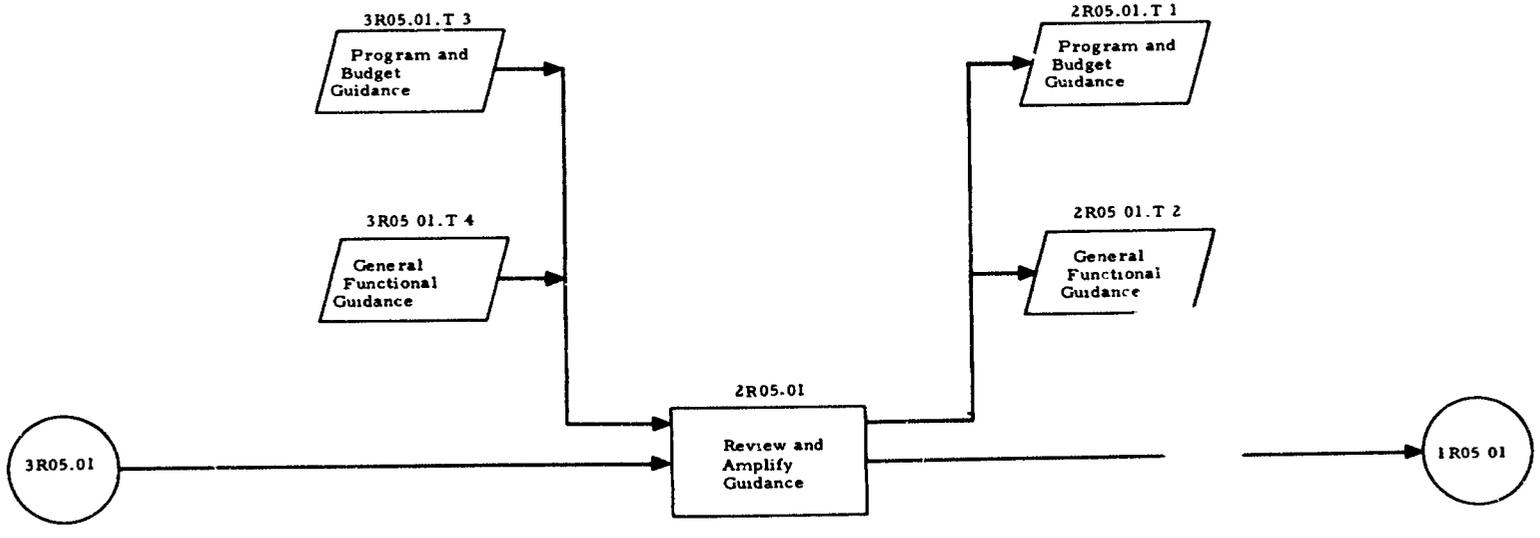

RPMA REVIEW FUNCTION
(MSC PREPARATION OF THE PYPR)

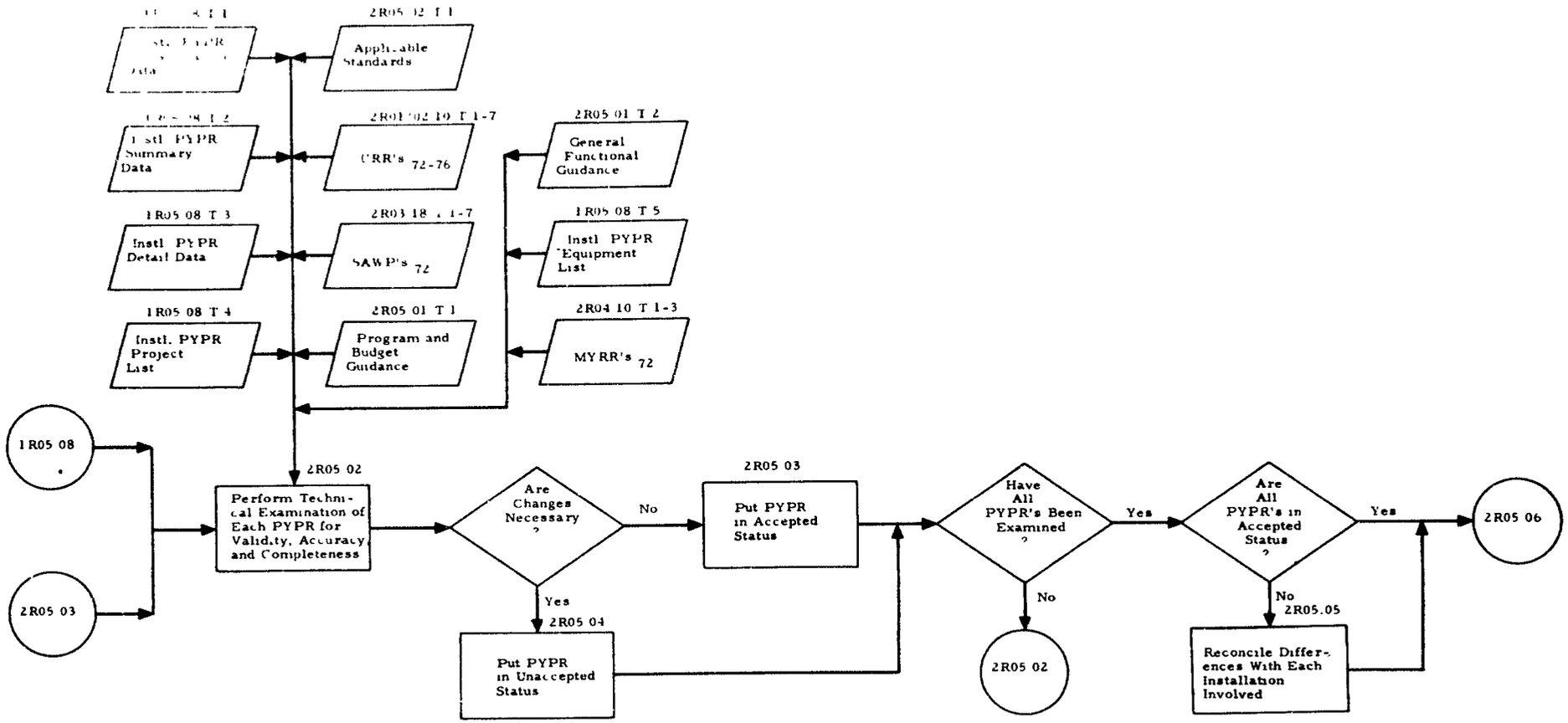

RPMA REVIEW FUNCTION
(MSC PREPARATION OF THE PYPR)

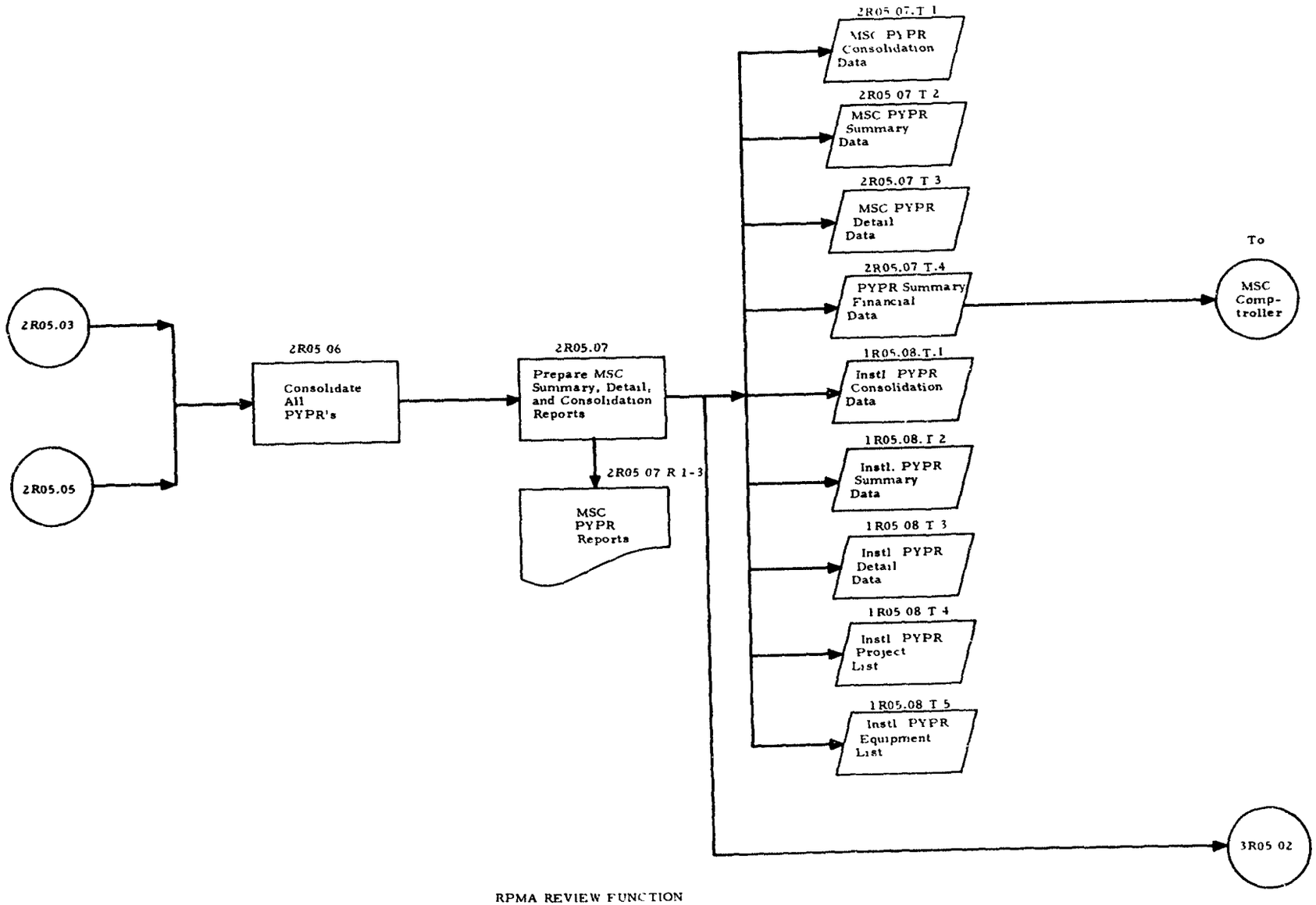

RPMA REVIEW FUNCTION
(MSC PREPARATION OF THE PYPR)

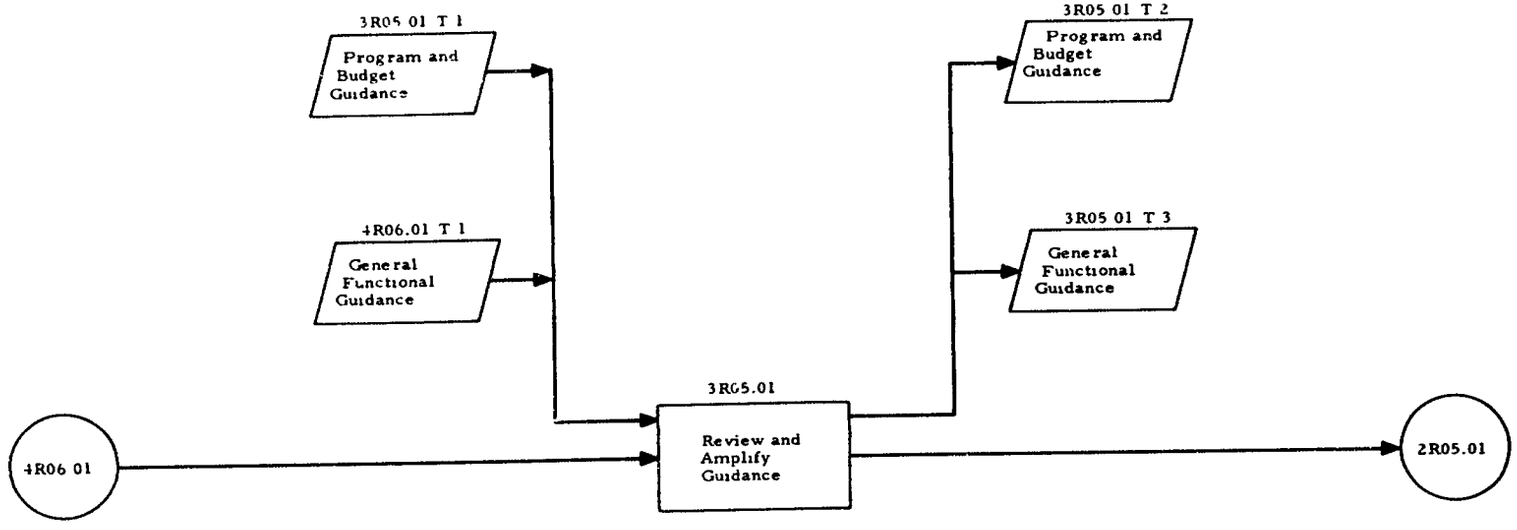

RPMA REVIEW FUNCTION
(MAFC PREPARATION OF THE PYPR)

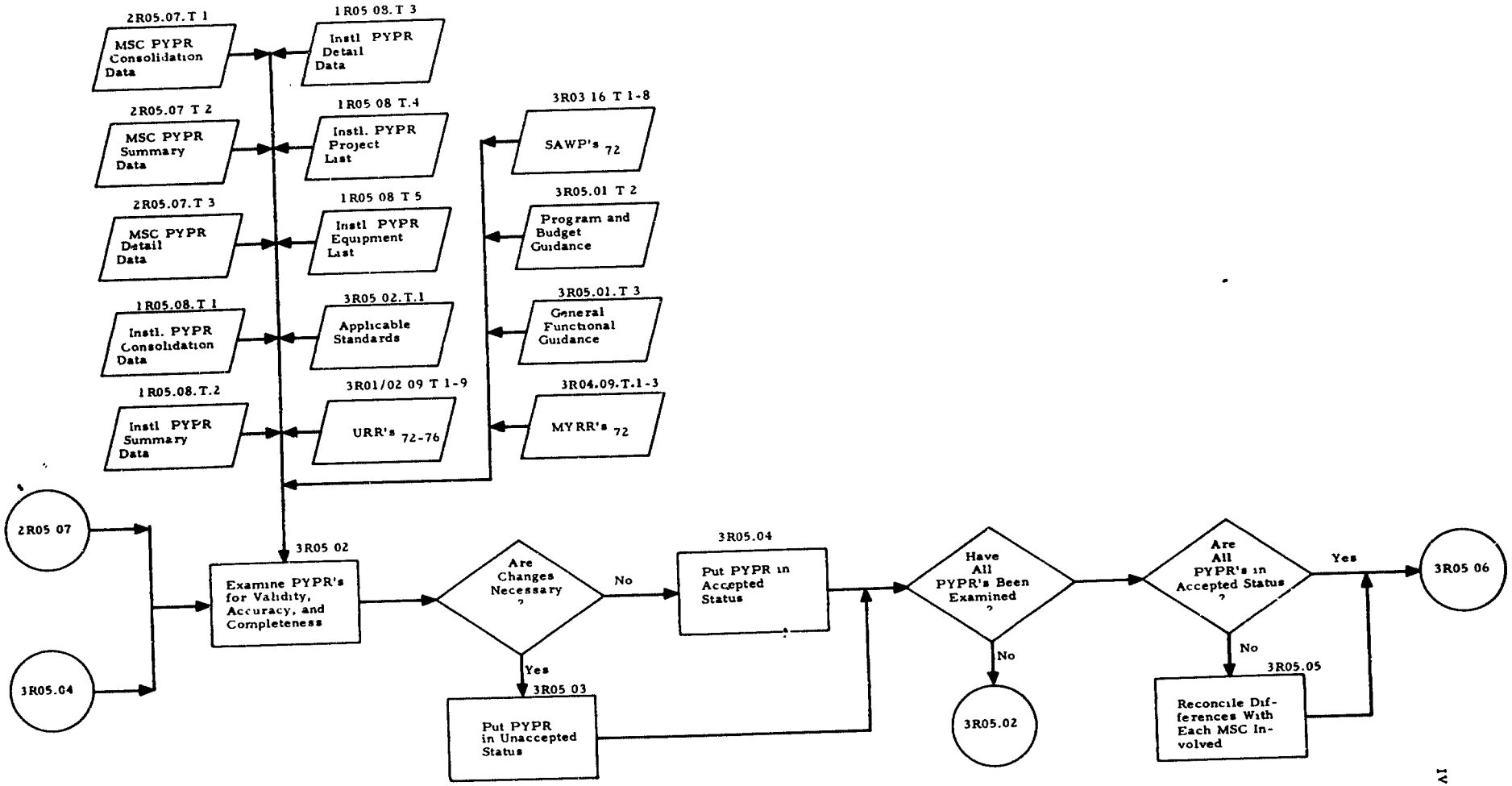

Note: Subscript denotes FY.
(Year of execution. FY 72)

RPMA REVIEW FUNCTION
(MAFC PREPARATION OF THE PYPR)

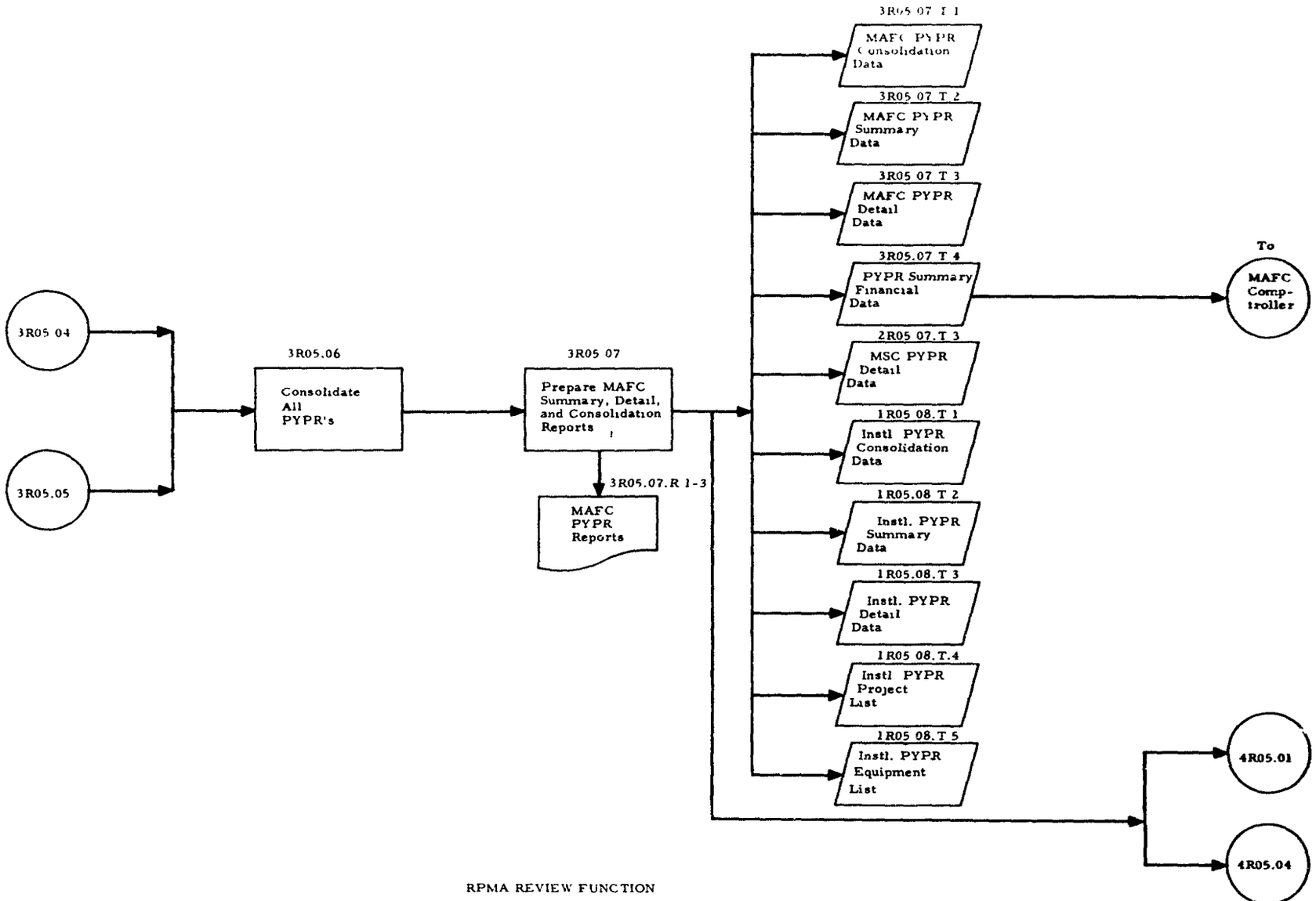

RPMA REVIEW FUNCTION
(MAFC PREPARATION OF THE PYPR)

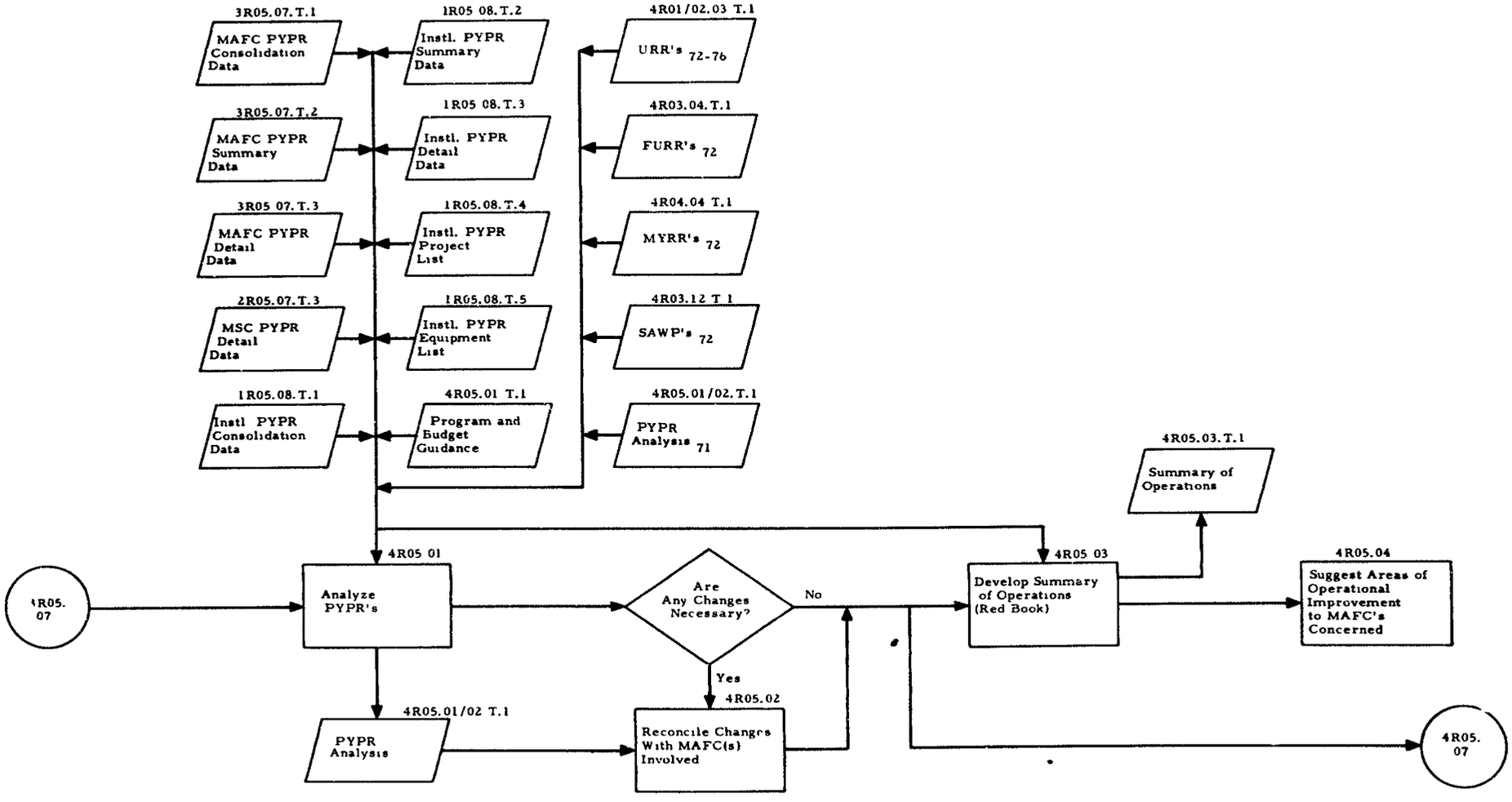

Note Subscript (e.g., URR_{71}) denotes FY (Year of execution: FY72)

RPMA REVIEW FUNCTION
(OCE PROCESSING OF THE PYPR)

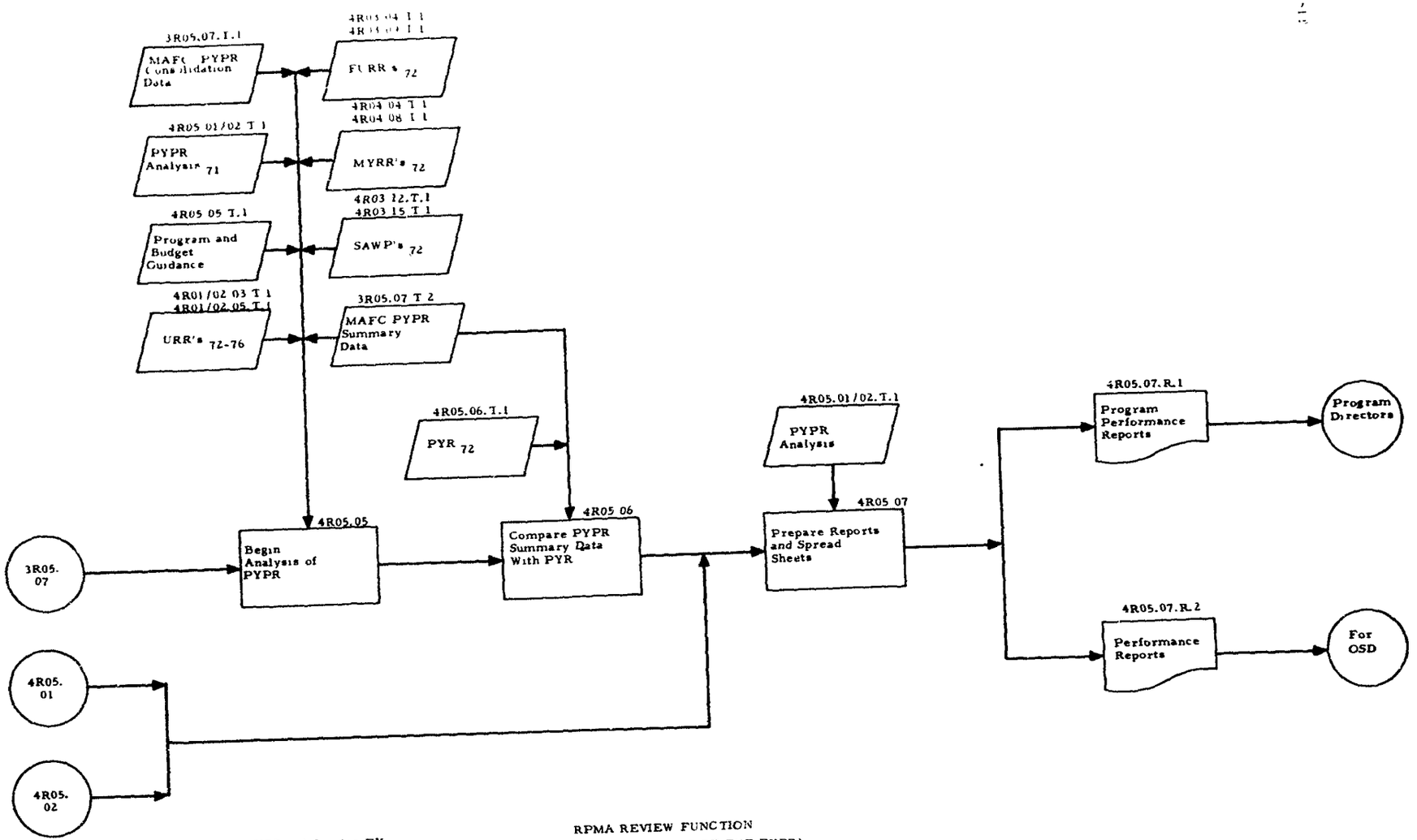

Note: Subscript (e.g., URR $_{71}$) denotes FY.
(Year of execution: FY72)

RPMA REVIEW FUNCTION
(RPMAO PROCESSING OF THE PYPR)

OPERATION LOGIC

Operation Name:

Compute Actual Costs

CODE: 1 R 0 5 . 0 1

The PYPR reports historical performance data for the past fiscal year. Actual expenditures recorded in the purchase cost and work management data sets must be aggregated to the levels specified in the PYPR report formats. These figures are compared with prior projections from planning, programming, budgeting, and execution documents. Particular attention should be paid to areas in which performance and projections are in strong disagreement.

Inputs Described Elsewhere

1R04.07.T.1-3	$MYRR_{72}$
1R05.01.T.1	Purchase costs

INPUT/OUTPUT DATA DESCRIPTION

[X] Input Name Work Management Data	OP CODE	1 R 0 5 . 0 1
[ ] Output Name	FLOW CHART REF	1 R 0 5 . 0 1 . T . . . 2

Description:

The work management data elements required during the review process are listed below. Refer to the PYPR to determine the context within which these elements are used.

Source (if user input) [X] Work Management System

Destination (if output) [ ]

Data Elements Contained

Data Element Name	Description or Reference
Actual hours to complete work orders with standards	
Actual hours working on work orders with standards	
Actual performance	
Building component	
Condition rating	
Contract $ cost	
Data class	
Dollars earned	
Equipment acquisition $ cost	
Equipment rental cost	
Equipment Type	
Facility component	
Functional category	

Remarks:

INPUT/OUTPUT DATA DESCRIPTION (Continued)

☒ Input Name Work Management Data	OP CODE	1 R 0 5 . 0 1
☐ Output Name	FLOW CHART REF	1 R 0 5 0 1 . T . . 2

Data Elements Contained

Data Element Name	Description or Reference
Hours with standards on completed work orders	
Labor $ cost	
Material and supplies $ cost	
Narrative description	
Narrative title	
Number of units	
Per capita usage	
Percent coverage	
Percent performance	
Performance standard	
Performance unit of measure	
Priority class	
Review period	
Status	
Target performance	
Total actual hours worked	
Total $ cost	
Type of work	
Unit cost	
Unit of measure	
User/program element/program	
Utility work categories	
Work accomplishment	

OPERATION LOGIC

Operation Name:

Compute Corrected Targets

CODE: 1 R0 5.0 2

Utility targets are theoretical consumption figures computed from projections of the appropriate usage parameters (e.g., force levels) and planning factors (e.g., per capita use). At the end of the execution year, corrected targets are computed from actual parameter performance. The resulting figures are then dependent only on the planning factors and may be used in tests of planning factor validity. This operation applies only to functional category 09.

INPUT/OUTPUT DATA DESCRIPTION

☐ Input Name		OP CODE	1R05.02
☒ Output Name	PYPR Input	FLOW CHART REF	1R05.02.T__.1

Description:

PYPR data are submitted by each functional area to be used in preparing the installation's PYPR report submissions.

Source (if user input) ☐

Destination (if output) ☒ 1R05.03

Data Elements Contained

Data Element Name		Reference
Unit of measure	Reimbursing agency	
Number of units	Appropriation	
Contract $ cost	FHMA subappropriation	
Labor $ cost	RDT&E subappropriation	
Material and supplies $ cost	OMA subappropriation	
Equipment acquisition $ cost	Fiscal quarter	
Total $ cost	Percent coverage	
Per capita usage	Dollars earned	
Performance unit of measure	Building component	
Performance standard	Surface improvement work categories	
Actual performance	Utility work categories	
Target performance		
Condition rating		
Financing type		

Remarks:

Which data are submitted depends on the functional category, but, in all cases, submitted data are in a subset of the data elements listed above.

OPERATION LOGIC

Operation Name:

Consolidate and Review PYPR Input

CODE: 1 R 0 5 . 0 3

PYPR inputs for the functional categories are brought together and examined as a unit for the first time. Preliminary review and verification of reported information occurs here. Particular attention should be paid to completeness and consistency in level of reporting. Required reporting and standard information are supplied by the two inputs, program and budget guidance and general functional guidance.

Inputs Described Elsewhere

2R05.01.T.1	Program and budget guidance
2R05.01.T.2	General functional guidance
1R05.02.T.1	PYPR input

OPERATION LOGIC

Operation Name:

Compare Actual and Targeted Costs

CODE: 1R05.04

Actual expenditures for the year for functional category 09 (operation of utilities) and corrected target costs are compared. This step identifies expenditure areas in need of narrative justification or explanation.

OPERATION LOGIC

Operation Name:

Update Facility Normal Maintenance Costs

CODE: 1R05.05

RPMA requirements projections are based, in part, on facility normal maintenance costs. These are defined as "the estimated annual total cost of the maintenance required to keep a facility at its current condition." They are maintained by facility number in the file SO2 (discussed in the Assets Storage and Retrieval Management Area design document, PRC R-1209, Vol. V) with the data element name Normal Maintenance Dollars. To some extent, their value depends on the age of the facility. Therefore, they must be updated occasionally to maintain their usefulness.

Outputs Described Elsewhere

1R05.05.502 Station detail file (see 1R01/02.01.502)

INPUT/OUTPUT DATA DESCRIPTION

☐ Input Name	OP CODE	1 R 0 5 . 0 5
☒ Output Name Station Detail File	FLOW CHART REF	1 R 0 5 . 0 5 . S 0 2 .

Description:

The assets storage and retrieval station detail file contains normal yearly maintenance costs by facility. These quantities are updated on the basis of the latest year's performance records. Therefore, the updated station detail file is an output from this operation.

Source (if user input) ☐

Destination (if output) ☒ IFS data base

Data Elements Contained

Data Element Name	Reference
	Assets Storage and Retrieval, PRC R-1209, Vol. V, November 1969, page D-4

Remarks:

OPERATION LOGIC

Operation Name:

Prepare Impact Statement and Explanatory Comments

CODE: 1 R 0 5 . 0 6

General narrative descriptions of the impact of the past year's RPMA program on the state of the installation's facilities are prepared. Explanatory comments are also prepared regarding areas in which expenditures are in strong disagreement with predictions. The appropriate Summary Annual Work Plan is used here as a basis against which to measure performance.

Inputs Described Elsewhere

1R03.12.T.1-5 $SAWP_{72}$

OPERATION LOGIC

Operation Name:
Prepare PYPR Summary, Consolidation, Detail and Project and Equipment List Reports

CODE: 1 R 0 5 . 0 7

The installation PYPR information has been collected, reviewed, and used to update appropriate planning factors. It is now summarized to PYPR consolidation and summary levels and then formatted as shown in the PYPR summary, consolidation, detail, project and equipment lists and in the building component, surface improvement, and utilities backup information formats.

IV-522

REPORT DESCRIPTION - PART A

Report Name:

Installation Prior Year Performance Reports

FLOW CHART REF: 1 R 0 5 . 0 7 . R 1-5

Description:

See: 1R05.08.T.1 Installation PYPR consolidation data
1R05.08.T.2 Installation PYPR summary data
1R05.08.T.3 Installation PYPR detail data
1R05.08.T.4 Installation PYPR project list
1R05.08.T.5 Installation PYPR equipment list

Estimated Number of Pages:

7

Suggested Frequency:

Annual

Trigger(s) for Report Production:

Close of execution year

Required Response Time:

45 working days from installation to HQ DA

Selection and Summarization Options:

OPERATION LOGIC

Operation Name:

Approve Installation PYPR

CODE: 1 R 0 5 . 0 8

The installation commander approves the PYPR submissions, and they are forwarded, through command channels, to the appropriate MSC.

INPUT/OUTPUT DATA DESCRIPTION

☐ Input Name	Installation PYPR	OP CODE	1 R 0 5 . 0 8
☒ Output Name	Consolidation Data	FLOW CHART REF	1 R 0 5 . 0 8 . T _ _ . 1

Description:

This information data is contained in the installation PYPR consolidation report. It is passed to the MSC for review.

Source (if user input) ☐

Destination (if output) ☒ 2R05.02

Data Elements Contained

Data Element Name	Reference
Fiscal quarter	
Contract $ cost	
Labor $ cost	
Material and supplies $ cost	
Equipment acquisition $ cost	
Total $ cost	
Financing type	
Appropriation	
Reimbursing agency	
OMA subappropriation	
RDT&E subappropriation	
FHMA subappropriation	

Remarks:

INPUT/OUTPUT DATA DESCRIPTION

☐ Input Name ☒ Output Name	Installation PYPR Summary Data	OP CODE	1 R 0 5 . 0 8
		FLOW CHART REF	1 R 0 5 . 0 8 . T . . . 2

Description:

This information is contained in the PYPR summary report. It is passed to the MSC for review.

Source (if user input) ☐

Destination (if output) ☒ 2R05.02

Data Elements Contained

Data Element Name		Reference
Unit of measure	Percent coverage	
Number of units	Condition rating	
Contract $ cost		
Labor $ cost		
Material and supplies $ cost		
Equipment acquisition $ cost		
Total $ cost		
Dollars earned		
Per capita usage		
Priority class		
Performance unit of measure		
Performance standard		
Actual performance		
Target performance		

Remarks:

INPUT/OUTPUT DATA DESCRIPTION

☐ Input Name	Installation PYPR	OP CODE	1 R 0 5 . 0 8
☒ Output Name	Detail Data	FLOW CHART REF	1 R 0 5 . 0 8 . T _ _ . 3

Description:

This information is contained in the installation PYPR detail report. It is passed to the MSC for review.

Source (if user input) ☐

Destination (if output) ☒ 2R05.02

Data Elements Contained

Data Element Name		Reference
Unit of measure	Building component	
Number of units	Surface improvement work categories	
Contract $ cost	Utility work categories	
Labor $ cost		
Material and supplies $ cost		
Equipment acquisition $ cost		
Total $ cost		
Dollars earned		
Per capita usage		
Priority class		
Performance unit of measure		
Performance standard		
Actual performance		
Target performance		

Remarks:

INPUT/OUTPUT DATA DESCRIPTION

☐ Input Name ☒ Output Name	Installation PYPR Project List	OP CODE	1R05.08
		FLOW CHART REF	1R05.08.T___.4

Description:

This information is contained in the installation PYPR project list. It is passed to the MSC for review.

Source (if user input) ☐

Destination (if output) ☒ 2R05.02

Data Elements Contained

Data Element Name	Reference
Narrative description	
Priority class	
Funded cost	
Unfunded cost	
Narrative title	
Unit of measure	
Number of units	

Remarks:

INPUT/OUTPUT DATA DESCRIPTION

☐ Input Name ☒ Output Name	Installation PYPR Equipment List	OP CODE	1 R 0 5 . 0 8
		FLOW CHART REF	1 R 0 5 . 0 8 . T . . 5

Description:

This information is contained in the installation PYPR equipment list. It is passed to the MSC for review.

Source (if user input) ☐

Destination (if output) ☒ 2R05.02

Data Elements Contained

Data Element Name	Reference
Equipment type Unit cost Number of units	

Remarks:

OPERATION LOGIC

Operation Name:

Review and Amplify Guidance

CODE: 2 R 0 5 . 0 1

Program and budget guidance and general functional guidance received by the MSC from the MAFC may not be changed but may be amplified and interpreted before being forwarded to installation level.

Inputs Described Elsewhere

3R05.01.T.3	Program and budget guidance
3R05.01.T.4	General functional guidance

INPUT/OUTPUT DATA DESCRIPTION

☐ Input Name ☒ Output Name	Program and Budget Guidance	OP CODE	2 R 0 5 0 1
		FLOW CHART REF	2 R 0 5 0 1 T 1

Description:

Program and budget guidance contains dollar guidance for preparation of command budgets and for reprogramming activities. The guidance received by the MSC may be amplified and interpreted before being transmitted to the installations.

Source (if user input) ☐

Destination (if output) ☒ 1R05.03

Data Elements Contained

Data Element Name	Reference
Functional category	
Funded cost	
Unfunded cost	
Appropriation	
User/program element/program	
Status of financing	
Financing type	
OMA subappropriation	
FHMA subappropriation	
RDT&E subappropriation	

Remarks:

INPUT/OUTPUT DATA DESCRIPTION

☐ Input Name ☒ Output Name	General Functional Guidance	OP CODE	2 R 0 5 . 0 1
		FLOW CHART REF	2 R 0 5 . 0 1 . T . . . 2

Description:

This guidance document is prepared annually and issued when the President's budget is sent to Congress. Changes to this document are issued ad hoc during the calendar year. The guidance received by the MSC is amplified and interpreted before being transmitted to the installations.

Source (if user input) ☐

Destination (if output) ☒ 1R05.03

Data Elements Contained

Data Element Name		Reference
Functional category	Status of financing	
Priority class	Fiscal quarter	
Narrative title	Work accomplishment	
Narrative description	Financing type	
Equipment type	Reimbursing agency	
Data type	Performance unit of measure	
Appropriation	Performance standard	
Status		
Personnel type		
Condition rating		
Facility component		
FC^4		
User/program element/program		
Type year		

Remarks:

OPERATION LOGIC

Operation Name:
Perform Technical Examination of Each PYPR for Validity, Accuracy and Completeness

CODE: 2 R 0 5 . 0 2

The PYPR is used in evaluating both planning and performance. It may be compared with the URR, FURR, SAWP, and MYRR to measure the accuracy of requirements estimation and work planning. Checks are also made for completeness and arithmetic accuracy in reporting. Review consists of locating areas in which actual costs or activity levels seem unwarranted in light of explanatory information and knowledge concerning the operation of the installations.

Inputs Described Elsewhere

1R05.08.T.1	Instl PYPR consolidation data
1R05.08.T.2	Instl PYPR summary data
1R05.08.T.3	Instl PYPR detail data
1R05.08.T.4	Instl PYPR project list
1R05.08.T.5	Instl PYPR equipment list
2R01/02.10.T.1-8	URR's
2R03.18.T.1-7	SWAP's
2R04.10.T.1-3	MYRR's
2R05.01.T.1	Program and budget guidance
2R05.01.T.2	General functional guidance

INPUT/OUTPUT DATA DESCRIPTION

☒ Input Name Applicable Standards ☐ Output Name	OP CODE	2 R 0 5 . 0 2
	FLOW CHART REF	2 R 0 5 0 2 . T . . . 1

Description:

These are standards taken from appropriate technical bulletins, DA pamphlets, etc.

Source (if user input) ☒

Destination (if output) ☐

Data Elements Contained

Data Element Name	Reference
	Appropriate technical bulletins, DA pamphlets, etc.

Remarks:

OPERATION LOGIC

Operation Name:

Put PYPR in Accepted Status

CODE: 2 R C 5 0 3

If MSC review of an installation's PYPR submissions reveals no unexplained areas of unusual cost or activity, acceptable agreement with prior projections, and complete and accurate reporting, they are considered acceptable for consolidation into appropriate MSC PYPR submissions to MAFC.

OPERATION LOGIC

Operation Name:

Put PYPR in Unaccepted Status

CODE: 2R0504

If an installation's PYPR submissions are found to be deficient in completeness, accuracy, or agreement with projections, or to contain areas of unusual activity or cost not satisfactorily explained, they are considered ineligible for incorporation into MSC documents until such deficiencies are resolved with the concerned installations.

OPERATION LOGIC

Operation Name:

Reconcile Differences With Each Installation Involved

CODE: 2 R 0 5 . 0 5

Deficiencies uncovered in the MSC review of installation's PYPR submissions are resolved in dialog with the appropriate installations. These may be deficiencies in format, arithmetic accuracy, or content.

OPERATION LOGIC

Operation Name:

Consolidate All PYPR's

CODE: 2R0506

Once all deficiencies in individual PYPR submissions have been reconciled to the satisfaction of the MSC, they are combined into MSC PYPR detail, summary, and consolidation data sets and forwarded to the appropriate MSC.

OPERATION LOGIC

Operation Name:
Prepare MSC Summary, Detail, and Consolidation Reports

CODE: 2R05.07

The MSC PYPR detail, summary, and consolidation data sets are formatted into the corresponding reports.

Outputs Described Elsewhere

1R05.08.T.1	Instl PYPR consolidation data
1R05.08.T.2	Instl PYPR summary data
1R05.08.T.3	Instl PYPR detail data
1R05.08.T.4	Instl PYPR project list
1R05.08.T.5	Instl PYPR equipment list

INPUT/OUTPUT DATA DESCRIPTION

☐ Input Name	MSC PYPR	OP CODE	2 R 0 5 . 0 7
☒ Output Name	Consolidation Data	FLOW CHART REF	2 R 0 5 0 7 . T . . 1

Description:

This information is contained in the MSC PYPR consolidation report. It is submitted to the MAFC for review.

Source (if user input) ☐

Destination (if output) ☒ 3R05.02

Data Elements Contained

Data Element Name	Reference
Fiscal quarter	
Contract $ cost	
Labor $ cost	
Material and supplies $ cost	
Equipment acquisition $ cost	
Total $ cost	
Financing type	
Appropriation	
Reimbursing agency	
OMA subappropriation	
RDT&E subappropriation	
FHMA subappropriation	

Remarks:

INPUT/OUTPUT DATA DESCRIPTION

☐ Input Name	MSC PYPR	OP CODE	2 R 0 5 . 0 7
☒ Output Name	Summary Data	FLOW CHART REF	2 R 0 5 . 0 7 . T . . . 2

Description:

This information is from the MSC PYPR summary report. It is submitted to the MAFC for review.

Source (if user input) ☐

Destination (if output) ☒ 3R05.02

Data Elements Contained

Data Element Name		Reference
Unit of measure	Percent coverage	
Number of units	Condition rating	
Contract $ cost		
Labor $ cost		
Material and supplies $ cost		
Equipment acquisition $ cost		
Total $ cost		
Dollars earned		
Per capita usage		
Priority class		
Performance unit of measure		
Performance standard		
Actual performance		
Target performance		

Remarks:

INPUT/OUTPUT DATA DESCRIPTION

☐ Input Name	MSC PYPR	OP CODE	2 R 0 5 . 0 7
☒ Output Name	Detail Data	FLOW CHART REF	2 R 0 5 . 0 7 . T . . 3

Description:

This information is contained in the MSC PYPR detail report. It is submitted to the MAFC for review.

Source (if user input) ☐

Destination (if output) ☒ 3R05.02

Data Elements Contained

Data Element Name	Reference
Unit of measure	
Number of units	
Contract $ cost	
Labor $ cost	
Material and supplies $ cost	
Equipment acquisition $ cost	
Total $ cost	
Dollars earned	
Per capita usage	
Priority class	
Performance unit of measure	
Performance standard	
Actual performance	
Target performance	

Remarks:

INPUT/OUTPUT DATA DESCRIPTION

☐ Input Name	PYPR Summary	OP CODE	2 R 0 5 . 0 7
☒ Output Name	Financial Data	FLOW CHART REF	2 R 0 5 0 7 . T . . . 4

Description:

These are overall RPMA costs by functional category (operation of utilities, maintenance of real property, minor construction, and other engineering services). They are input to comptroller generation of the PYR.

Source (if user input) ☐

Destination (if output) ☒ MSC comptroller

Data Elements Contained

Data Element Name	Reference
Total $ cost	
Functional category	

Remarks:

REPORT DESCRIPTION - PART A

Report Name:

MSC PYPR Reports

FLOW CHART REF: 2 R 0 5 0 7 . R 1-3

Description:

See: 2R05.07.T.1 MSC PYPR consolidation data
2R05.07.T.2 MSC PYPR summary data
2R05.07.T.3 MSC PYPR detail data

Estimated Number of Pages:

14

Suggested Frequency:

Annual

Trigger(s) for Report Production:

Receipt of installation PYPR submissions

Required Response Time:

45 working days from installation to HQ DA

Selection and Summarization Options:

OPERATION LOGIC

Operation Name:

Review and Amplify Guidance

CODE: 3 R 0 5 . 0 1

Program and budget guidance and general functional guidance received by the MAFC from HQDA may not be changed but may be amplified and interpreted before being forwarded to MSC level.

Inputs Described Elsewhere

4R06.01.T.1 General functional guidance

INPUT/OUTPUT DATA DESCRIPTION

[x] Input Name [ ] Output Name	Program and Budget Guidance	OP CODE	3 R 0 5 . 0 1
		FLOW CHART REF	3 R 0 5 . 0 1 . T . . . 1

Description:

Contains dollar guidance for preparation of command budgets and for reprogramming activities.

Source (if user input) [x] Army Comptroller channels

Destination (if output) [ ]

Data Elements Contained

Data Element Name	Reference
Functional category	
Funded cost	
Unfunded cost	
Appropriation	
User/program element/program	
Status of financing	
Financing type	
OMA subappropriation	
FHMA subappropriation	
RDT&E subappropriation	

Remarks:

INPUT/OUTPUT DATA DESCRIPTION

☐ Input Name	Program and Budget Guidance	OP CODE	3 R 0 5 . 0 1
☒ Output Name		FLOW CHART REF	3 R 0 5 0 1 T 2

Description:

Program and budget guidance received by the MAFC (3R05.01.T.1) may be amplified and interpreted before being transmitted to the MSC.

Source (if user input) ☐

Destination (if output) ☒ 2R05.01

Data Elements Contained

Data Element Name	Reference
Functional category	
Funded cost	
Unfunded cost	
Appropriation	
User/program element/program	
Status of financing	
Financing type	
OMA subappropriation	
FHMA subappropriation	
RDT&E subappropriation	

Remarks:

INPUT/OUTPUT DATA DESCRIPTION

☐ Input Name	General Functional	OP CODE	3 R 0 5 . 0 1
☒ Output Name	Guidance	FLOW CHART REF	3 R 0 5 0 1 T . 3

Description:

This guidance document is prepared annually and issued when the President's budget is sent to Congress. Changes to this document are issued ad hoc during the calendar year. The guidance received by MAFC is amplified and interpreted before being transmitted to the MSC.

Source (if user input) ☐

Destination (if output) ☒ 2R05.01

Data Elements Contained

Data Element Name		Reference
Functional category	Status of financing	
Priority class	Fiscal quarter	
Narrative title	Work accomplishment	
Narrative description	Financing type	
Equipment type	Reimbursing agency	
Data type	Performance unit of measure	
Appropriation	Performance standard	
Status		
Personnel type		
Condition rating		
Facility component		
FC^4		
User/program element/program		
Type year		

Remarks:

OPERATION LOGIC

Operation Name:
Examine PYPR's for Validity, Accuracy, and Completeness

CODE: 3 R 0 5 . 0 2

The MAFC PYPR review function is technically equivalent to the MSC review function discussed in operation 2R05.02. The PYPR submissions are compared with the prior URR, FURR, SAWP, and MYRR to measure the accuracy of requirements estimation and work planning. Again, checks for accuracy and completeness in reporting are made. Examination is made for areas in which costs or activity levels seem unwarranted in light of MAFC knowledge of MSC activities and supporting explanatory information.

Inputs Described Elsewhere

1R05.08.T.1	Instl PYPR consolidation data
1R05.08.T.2	Instl PYPR summary data
1R05.08.T.3	Instl PYPR detail data
1R05.08.T.4	Instl PYPR project list
1R05.08.T.5	Instl PYPR equipment list
2R05.07.T.1	MSC PYPR consolidation data
2R05.07.T.2	MSC PYPR summary data
2R05.07.T.3	MSC PYPR detail data
3R01/02.09.T.1-9	URR's
3R03.16.T.1-8	SAWP's
3R04.09.T.1-3	MYRR's
3R05.01.T.2	Program and budget guidance
3R05.01.T.3	General functional guidance

INPUT/OUTPUT DATA DESCRIPTION

[x] Input Name	Applicable Standards	OP CODE	3 R 0 5 . 0 2
[ ] Output Name		FLOW CHART REF	3 R 0 5 0 2 T . 1

Description:

These are standards taken from appropriate technical bulletins, DA pamphlets, etc.

Source (if user input) [x] TB Eng. 259, etc.

Destination (if output) [ ]

Data Elements Contained

Data Element Name	Reference
	Appropriate technical bulletins, DA pamphlets, etc.

Remarks:

OPERATION LOGIC

Operation Name:

Put PYPR in Unaccepted Status

CODE: 3 R 0 5 . 0 3

If an MSC's PYPR submissions are found to be deficient in completeness, accuracy, or agreement with projections, or if they are found to contain areas of unusual activity or cost not satisfactorily explained, they are considered ineligible for incorporation into MAFC document until such deficiencies are resolved with the MSC concerned.

OPERATION LOGIC

Operation Name:

Put PYPR in Accepted Status

CODE: 3 R 0 5 . 0 4

If MAFC review of MSC PYPR submissions reveals no unexplained areas of unusual cost or activity, acceptable agreement with prior projections, and complete and accurate reporting, they are considered eligible for incorporation into appropriate MAFC PYPR submissions to HQ DA.

OPERATION LOGIC

Operation Name:
Reconcile Differences With Each MSC Involved

CODE: 3 R 0 5 . 0 5

Deficiencies uncovered in the MAFC review of MSC PYPR submissions are resolved in dialog with the appropriate MSC's. These deficiencies may be in format, arithmetic accuracy, or content.

OPERATION LOGIC

Operation Name:

Consolidate All PYPR's

CODE: 3 R 0 5 . 0 6

Once all deficiencies in individual PYPR submissions have been reconciled to the MAFC's satisfaction, they are brought together and used to prepare the MAFC PYPR submission to HQ DA.

OPERATION LOGIC

Operation Name:
Prepare MAFC Summary, Detail, and Consolidation Reports

CODE: 3R05.07

The MAFC PYPR detail, summary, and consolidation data sets from the previous operation are formatted into the corresponding MAFC reports.

Outputs Described Elsewhere

1R05.08.T.1	Instl PYPR consolidation data
1R05.08.T.2	Instl PYPR summary data
1R05.08.T.3	Instl PYPR detail data
1R05.08.T.4	Instl PYPR project list
1R05.08.T.5	Instl PYPR equipment list
2R05.07.T.3	MSC PYPR detail data

INPUT/OUTPUT DATA DESCRIPTION

☐ Input Name	MAFC PYPR	OP CODE	3 R 0 5 . 0 7
☒ Output Name	Consolidation Data	FLOW CHART REF	3 R 0 5 0 7 . T . 1

Description:

This information is from the MAFC PYPR consolidation report. It is submitted to HQ DA for review.

Source (if user input) ☐

Destination (if output) ☒ 4R05.01

Data Elements Contained

Data Element Name	Reference
Fiscal quarter	
Contract $ cost	
Labor $ cost	
Material and supplies $ cost	
Equipment acquisition $ cost	
Total $ cost	
Financing type	
Appropriation	
Reimbursing agency	
OMA subappropriation	
RDT&E subappropriation	
FHMA subappropriation	

Remarks:

INPUT/OUTPUT DATA DESCRIPTION

☐ Input Name	MAFC PYPR	OP CODE	3 R 0 5 . 0 7
☒ Output Name	Summary Data	FLOW CHART REF	3 R 0 5 . 0 7 . T . . . 2

Description:

This is the data in the MAFC PYPR summary report. It is submitted to HQ DA for review.

Source (if user input) ☐

Destination (if output) ☒ 4R05.01

Data Elements Contained

Data Element Name		Reference
Unit of measure	Percent coverage	
Number of units	Condition rating	
Contract $ cost		
Labor $ cost		
Material and supplies $ cost		
Equipment acquisition $ cost		
Total $ cost		
Dollars earned		
Per capita usage		
Priority class		
Performance unit of measure		
Performance standard		
Actual performance		
Target performance		

Remarks:

INPUT/OUTPUT DATA DESCRIPTION

☐ Input Name	MAFC PYPR	OP CODE	3 R 0 5 . 0 7
☒ Output Name	Detail Data	FLOW CHART REF	3 R 0 5 0 7 . T . . . 3

Description:

This information is contained in the MAFC PYPR detail report. It is submitted to HQ DA for review.

Source (if user input) ☐

Destination (if output) ☒ 4R05.01

Data Elements Contained

Data Element Name	Reference
Unit of measure	
Number of units	
Contract $ cost	
Labor $ cost	
Material and supplies $ cost	
Equipment acquisition $ cost	
Total $ cost	
Dollars earned	
Per capita usage	
Priority class	
Performance unit of measure	
Performance standard	
Actual performance	
Target performance	

Remarks:

INPUT/OUTPUT DATA DESCRIPTION

☐ Input Name	PYPR Summary	OP CODE	3 R 0 5 . 0 7
☒ Output Name	Financial Data	FLOW CHART REF	3 R 0 5 0 7 . T . . . 4

Description:

This data set contains overall expenditure amounts by functional category. They are input to comptroller generation of the Prior Year Report.

Source (if user input) ☐

Destination (if output) ☒ MAFC Comptroller

Data Elements Contained

Data Element Name	Reference
Total $ cost Functional category	

Remarks:

REPORT DESCRIPTION - PART A

Report Name:

MAFC PYPR Reports

FLOW CHART REF: 3 R 0 5 . 0 7 . R 1-3

Description:

See: 3R05.07.T.1 MAFC PYPR consolidation data
3R05.07.T.2 MAFC PYPR summary data
3R05.07.T.3 MAFC PYPR detail data

Estimated Number of Pages:

50

Suggested Frequency:

Annual

Trigger(s) for Report Production:

Receipt of MSC PYPR submissions

Required Response Time:

45 days from installation to HQ DA

Selection and Summarization Options:

OPERATION LOGIC

Operation Name:
Analyze PYPR's

CODE: 4 R 05 . 0 1

Each MAFC's PYPR submission is subjected to detailed analysis by OCE at this point. Formal analysis comments and recommendations are sent to the MAFC's in the form of TAG letters. Analyses to the technical service commands are forwarded by OCE letter. The data submitted are also used in OCE facilities engineering visits. It is (1) examined for completeness and arithmetic accuracy in reporting, (2) compared with applicable URR's, FURR's, SAWP's, and MYRR's to evaluate projection capabilities and suitability of planning factors, and (3) used to develop data for the Summary of Operations (Red Book).

Inputs Described Elsewhere

1R05.08.T.1	Instl PYPR consolidation data
1R05.08.T.2	Instl PYPR summary data
1R05.08.T.3	Instl PYPR detail data
1R05.08.T.4	Instl PYPR project list
1R05.08.T.5	Instl PYPR equipment list
2R05.07.T.3	MSC PYPR detail data
3R05.07.T.1	MAFC PYPR consolidation data
3R05.07.T.2	MAFC PYPR summary data
3R05.07.T.3	MAFC PYPR detail data
4R01/02.03.T.1	URR's
4R03.04.T.1	FURR's
4R03.12.T.1	SAWP's
4R04.04.T.1	MYRR's
4R05.01/02.T.1	PYPR's

INPUT/OUTPUT DATA DESCRIPTION

☐ Input Name		OP CODE	4 R 0 5 . 0 1
☒ Output Name	PYPR Analysis	FLOW CHART REF	4R05.01/02.T.1

Description:

This is the result of the OCE analysis of the PYPR submissions in light of program and budget guidance and prior RPMA management report submissions. It is used in preparation of program performance reports for program directors and performance reports for OSD.

Source (if user input) ☐

Destination (if output) ☒ 4R05.07

Data Elements Contained

Data Element Name		Reference
Unit of measure	Condition rating	
Number of units	User/program element/ program	
Contract $ cost		
Labor $ cost		
Material and supplies $ cost		
Equipment acquisition $ cost		
Total $ cost		
Dollars earned		
Per capita usage		
Priority class		
Performance unit of measure		
Performance standard		
Actual performance		
Target performance		

Remarks:

Data elements included here are essentially those included in the PYPR summary report, since these data will eventually be used to produce summary reports for the program directors.

INPUT/OUTPUT DATA DESCRIPTION

☒ Input Name ☐ Output Name	Program and Budget Guidance	OP CODE	4 R 0 5 . 0 1
		FLOW CHART REF	4 R 0 5 . 0 1 . T . . 1

Description:

Contains dollar guidance for preparation of command budgets and reprogramming activities.

Source (if user input) ☐

Destination (if output) ☐

Data Elements Contained

Data Element Name	Reference
Functional category	
Funded cost	
Unfunded cost	
Appropriation	
User/program/element/program	
Status of financing	
Financing type	
OMA subappropriation	
FHMA subappropriation	
RDT&E subappropriation	

Remarks:

OPERATION LOGIC

Operation Name:

Reconcile Changes with MAFC(s) Involved

CODE: 4 R 0 5 . 0 2

Any reporting deficiencies found in the analysis of the MAFC PYPR submissions are reconciled through dialog with the MAFC's involved.

INPUT/OUTPUT DATA DESCRIPTION

☐ Input Name	OP CODE	4 R 0 5 . 0 2
☒ Output Name PYPR Analysis	FLOW CHART REF	4 R 0 5.01/02 . T _ _ . 1

Description:

The PYPR analysis produced in operation 4R05. 01 is reconciled with appropriate MAFC's.

Source (if user input) ☐

Destination (if output) ☒ 4R05. 07

Data Elements Contained

Data Element Name		Reference
Unit of measure	Condition rating	
Number of units	User/program element/program	
Contract $ cost		
Labor $ cost		
Material and supplies $ cost		
Equipment acquisition $ cost		
Total $ cost		
Dollars earned		
Per capita usage		
Priority class		
Performance unit of measure		
Performance standard		
Actual performance		
Target performance		

Remarks:

OPERATION LOGIC

Operation Name:

Develop Summary of Operations (Red Book)

CODE: 4 R 0 5 . 0 3

The annual Summary of Operations (Red Book) is prepared by OCE from data in the MAFC PYPR submissions. This report provides expenditures and operating data, workloads, and trends for post engineering activities, including maintenance of real property, operations of utilities, fire prevention and protection, other engineering support, and minor construction. Costs shown in the Summary of Operations reflect funds expended only and do not indicate in any way whether these funds were adequate to accomplish all required work in these functional areas.

INPUT/OUTPUT DATA DESCRIPTION

☐ Input Name	OP CODE	4 R 0 5 . 0 3
☒ Output Name Summary of Operations	FLOW CHART REF	4 R 0 3 . 0 5 . T _ _ . 1

Description:

This data set is the annual Summary of Operations (Red Book). It contains overall performance data organized geographically, by command, by functional category, trends in force level and expenditures, and backlog information from appropriate URR submissions.

Source (if user input) ☐

Destination (if output) ☒ Distributed widely to interested personnel.

Data Elements Contained

Data Element Name	Reference
Functional category	
Command abbreviation	
Unit of measure	
Number of units	
User/program element/program	
Target performance	
Actual performance	
Total $ cost	

Remarks:

OPERATION LOGIC

Operation Name:
Suggest Areas of Operational Improvement to MAFC's Concerned

CODE: 4 R 0 5 . 0 4

On the basis of the detailed analysis of PYPR submissions to OCE, specific recommendations are made to appropriate MAFC's concerning areas in which operations could be improved.

OPERATION LOGIC

Operation Name:
Begin Analysis of PYPR

CODE: 4 R 05.05

The RPMAO analysis of PYPR data is directed chiefly to the MAFC consolidation level inputs. It is oriented toward (1) detecting trends in funding levels, (2) determining the relationship between requirements as expressed in the planning, programming, budgeting, and execution documents and actual work accomplishment, and (3) gathering any other information useful in establishing satisfactory RPMA funding levels.

Inputs Described Elsewhere

3R05. 07. T. 1	MAFC PYPR consolidation data
3R05. 07. T. 2	MAFC PYPR summary data
4R01/02. 03. T. 1 4R01/02. 05. T. 1	URR's
4R03. 04. T. 1 4R03. 09. T. 1	FURR's
4R03. 12. T. 1 4R03. 15. T. 1	SAWP's
4R04. 04. T. 1 4R04. 08. T. 1	MYRR's
4R05. 01/02. T. 1	PYPR

INPUT/OUTPUT DATA DESCRIPTION

☒ Input Name ☐ Output Name	Program and Budget Guidance	OP CODE	4 R 0 5 . 0 5
		FLOW CHART REF	4 R 0 5 . 0 5 . T _ _ . 1

Description:

Contains dollar guidance for preparation of command budgets and for reprogramming activities.

Source (if user input) ☐

Destination (if output) ☐

Data Elements Contained

Data Element Name	Reference
Functional category	
Funded cost	
Unfunded cost	
Appropriation	
User/program element/program	
Status of financing	
Financing type	
OMA subappropriation	
FHMA subappropriation	
RDT&E subappropriation	

Remarks:

OPERATION LOGIC

Operation Name:

Compare PYPR Summary Data with PYR

CODE: 4 R 0 5 . 0 6

The PYR is a historical financial reporting document. It is submitted to HQ DA through financial reporting channels. Gross expenditure levels by functional category derived from PYPR data should agree with corresponding figures reported in the PYR.

INPUT/OUTPUT DATA DESCRIPTION

☒ Input Name	Prior Year Report	OP CODE	4R05.06
☐ Output Name		FLOW CHART REF	4R05.06.T__.1

Description:

The Prior Year Report contains financial performance data by object class and functional category. It is produced by the Army Comptroller. The totals by functional category must agree with corresponding PYPR.

Source (if user input) ☒ Army Comptroller

Destination (if output) ☐

Data Elements Contained

Data Element Name	Reference
Functional category Object class Total $ cost	

Remarks:

OPERATION LOGIC

Operation Name:

Prepare Reports and Spread Sheets

CODE: 4R05.07

RPMA performance reports are prepared in response to OSD reporting requirements. Summary level PYPR spread sheets are prepared for distribution to the program directors showing projected and actual execution levels in their areas of responsibility.

Inputs Described Elsewhere

4R05.01/02.T.1 PYPR analysis

FUNCTION NARRATIVE (data flow through operations)

Function Name: RPMA General Functional Guidance Generation	CODE: 4 R 0 6

This function contains a single operation, 4R06.01, Generate RPMA General Functional Guidance. This guidance, produced by the RPMAO (DCSLOG), is used at all echelons during the preparation and processing of each RPMA report. The guidance is prepared annually and is issued when the President's budget is sent to Congress. Changes are promulgated as necessary during the year.

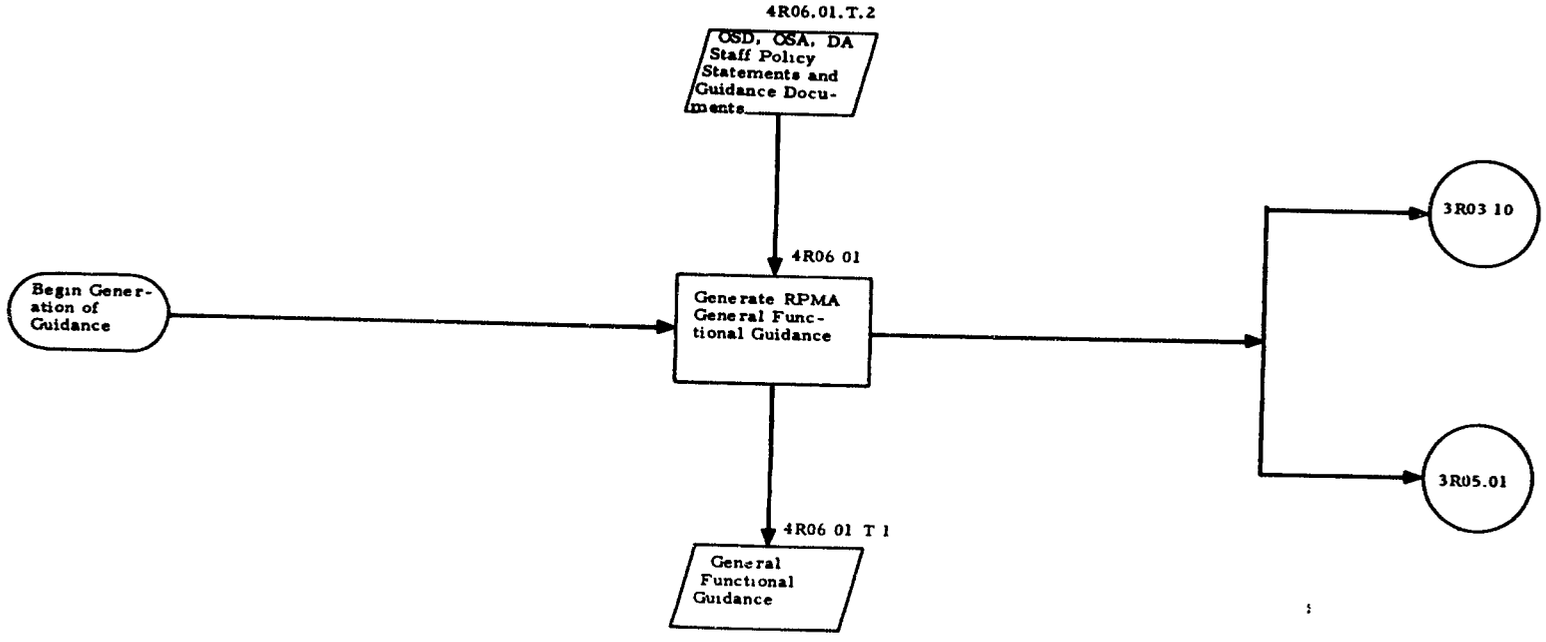

GENERATION OF RPMA GENERAL FUNCTIONAL GUIDANCE (RPMAO)

OPERATION LOGIC

Operation Name:
Generate RPMA General Functional Guidance

CODE: 4R06.01

The RPMAO (DCSLOG) prepares and issues RPMA General Functional Guidance annually. This guidance interprets pertinent portions of OSD, OSA, and DA policy statements and guidance documents for use by lower echelons in preparation and processing of the various RPMA data and reports. The guidance is issued when the President's budget is sent to Congress. Changes to the basic guidance are prepared and issued as necessary.

Included in the guidance is a specification of the times at which the RPMA SAWP and PYPR reports are to be produced. For this reason the operation is portrayed as initiating the processes (at 3R03.10 and 3R05.01) that lead to preparation of the reports.

INPUT/OUTPUT DATA DESCRIPTION

☐ Input Name ☒ Output Name	General Functional Guidance	OP CODE	4 R 0 6 . 0 1
		FLOW CHART REF	4 R 0 6 . 0 1 . T . . . 1

Description:
Contains RPMAO's interpretation of the pertinent portions of the various policy statements and guidance documents that it receives from the various offices and agencies referred to in 4R06.01.T.2.

Source (if user input) ☐

Destination (if output) ☒ 3R01/02.01, 3R03.01, 3R03.10, 3R04.01, 3R05.01

Data Elements Contained

Data Element Name		Reference
Functional category	Status of financing	
Priority class	Fiscal quarter	
Narrative title	Work accomplishment	
Narrative description	Financing type	
Equipment type	Reimbursing agency	
Data type	Performance unit of measure	
Appropriation	Performance standard	
Status		
Personnel type		
Condition rating		
Facility component		
FC^4		
User/program element/program		
Type year		

Remarks:

INPUT/OUTPUT DATA DESCRIPTION

☒ Input Name ☐ Output Name	OSD, OSA, DA Staff Policy Statements and Guidance Documents	OP CODE	4 R 0 6 . 0 1
		FLOW CHART REF	4 R 0 6 . 0 1 . T . . . 2

Description:

These policy statements and guidance documents are either financial or functional, depending on the office of origin. In addition to dollar guidance, they contain broad guidelines on priorities, MRPF floor, IBP policies, etc.

Source (if user input) ☐

Destination (if output) ☐

Data Elements Contained

Data Element Name	Reference
Priority class Object class Elements of expense Functional category Funded cost Unfunded cost Appropriation FC4 Financing type	

Remarks:

D. Function and Operation Flow Charts by Echelon

The previous subsection (C.) described each RPMA management function separately in order for a management function to be easily traced from the installation to HQ DA. This section presents the design by echelon so that all functions and operations performed at a given echelon may be easily identified. Only the flow charts are included in this section.

Functional Category 09

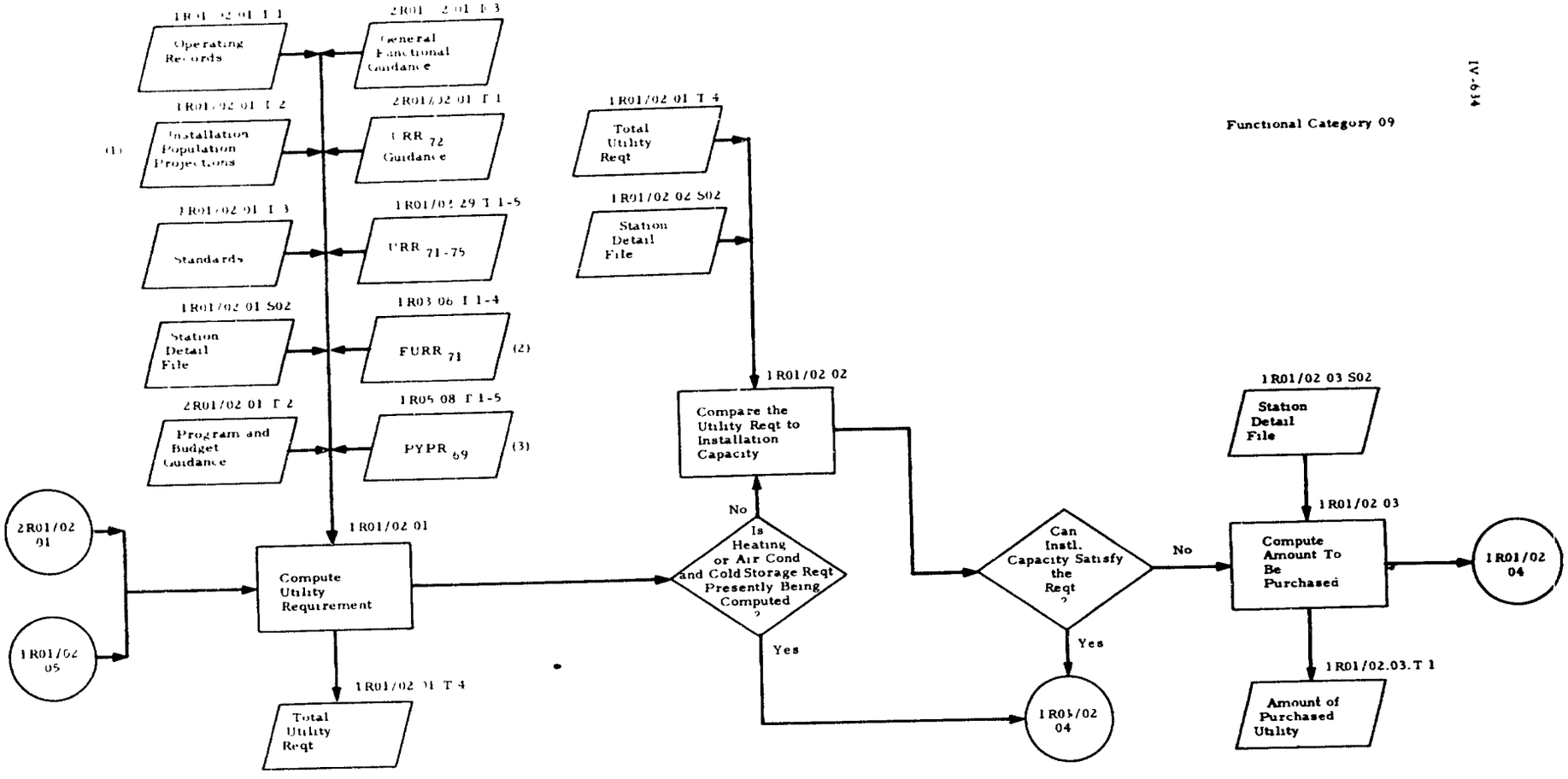

Notes: Subscript (e g , URR_{71}) denotes FY
(Year of execution FY72)

(1) Not used during air-condition and cold storage requirement computation

(2) Used during air-condition and cold storage requirement computation only

(3) Not used during computation of water and heating requirements

RPMA PLANNING AND PROGRAMMING FUNCTION
(INSTALLATION PREPARATION OF THE URR)

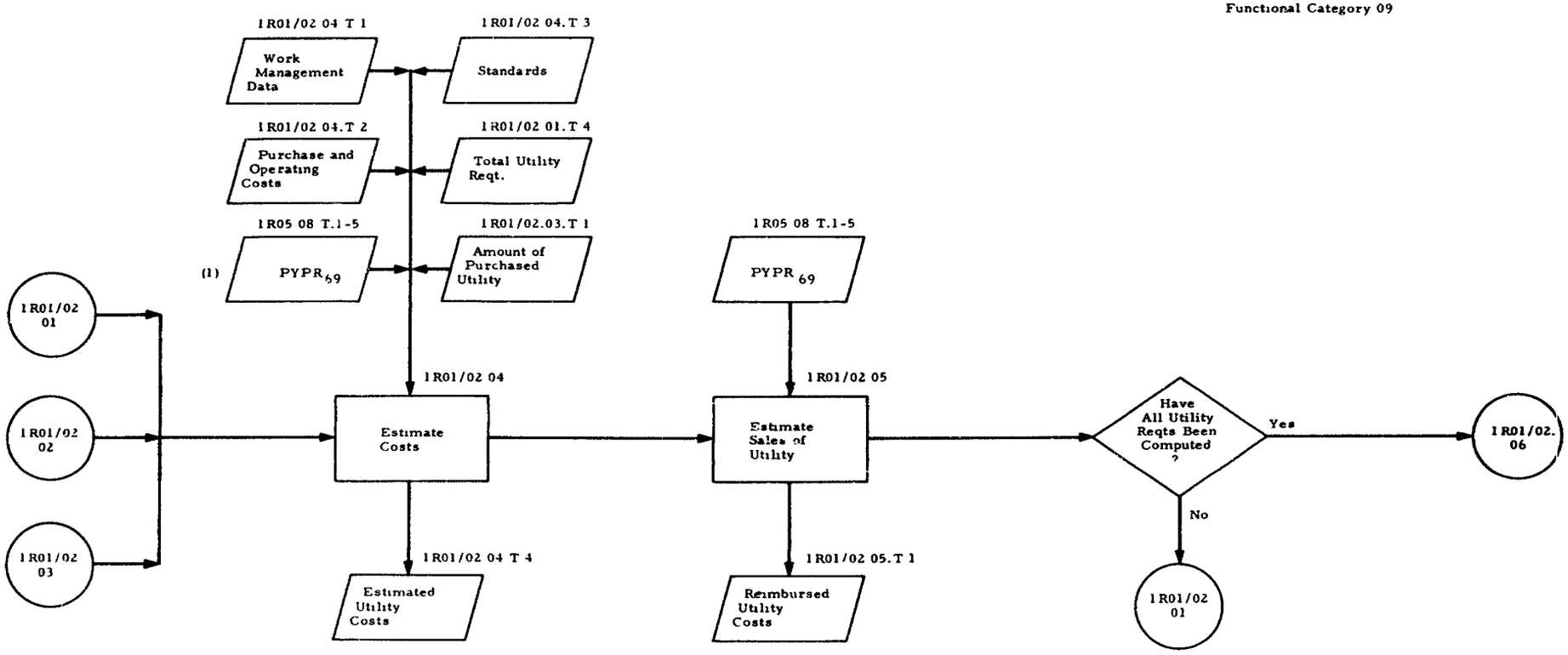

Note: Subscript (e.g., URR_{71}) denotes FY (Year of execution· FY72)

(1) Not used during computation of heating or air-condition and cold storage costs

RPMA PLANNING AND PROGRAMMING FUNCTION
(INSTALLATION PREPARATION OF THE URR)

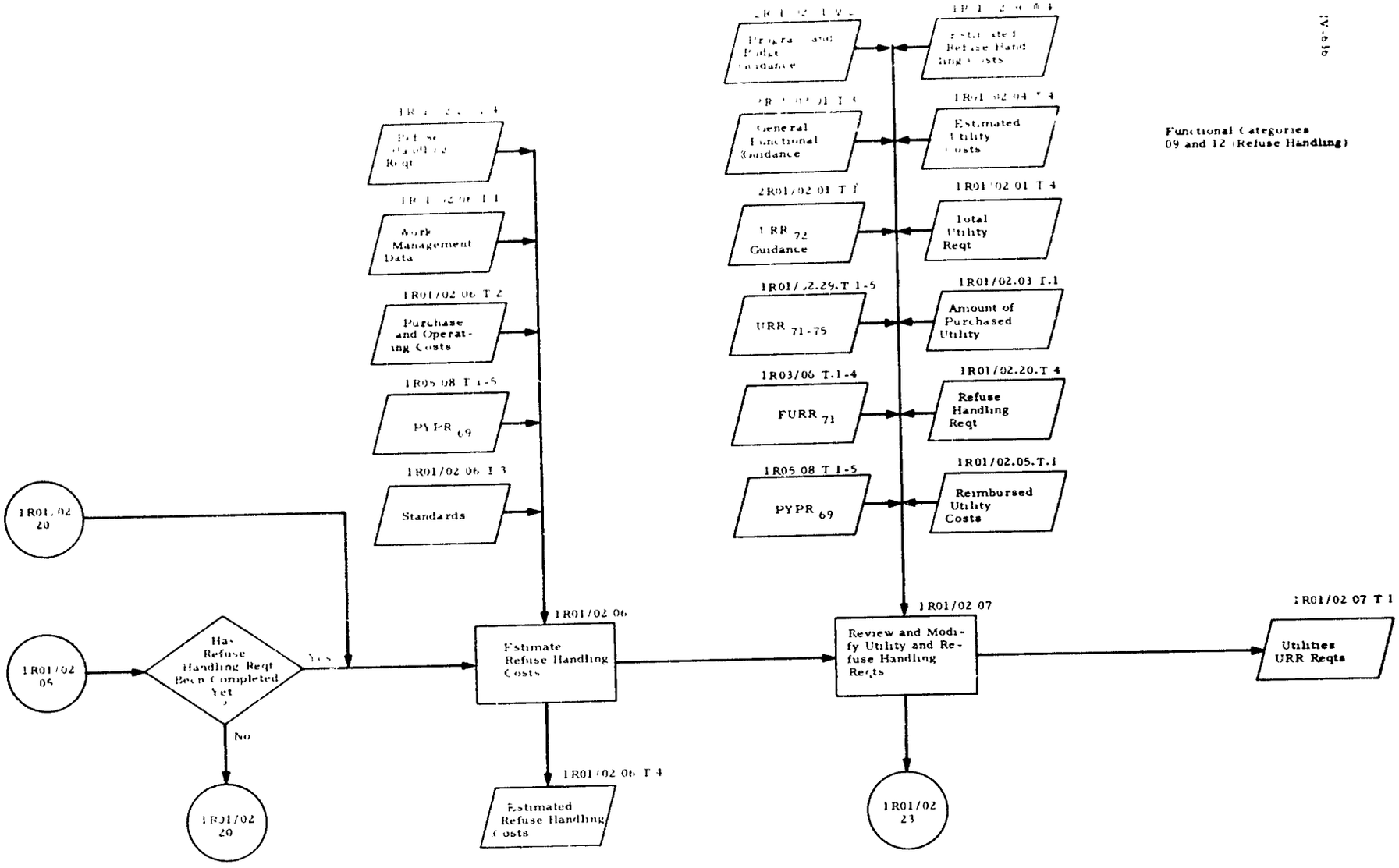

Note: Subscript (e.g., URR71) denotes FY (Year of execution: FY 72)

RPMA PLANNING AND PROGRAMMING FUNCTION
(INSTALLATION PREPARATION OF THE URR)

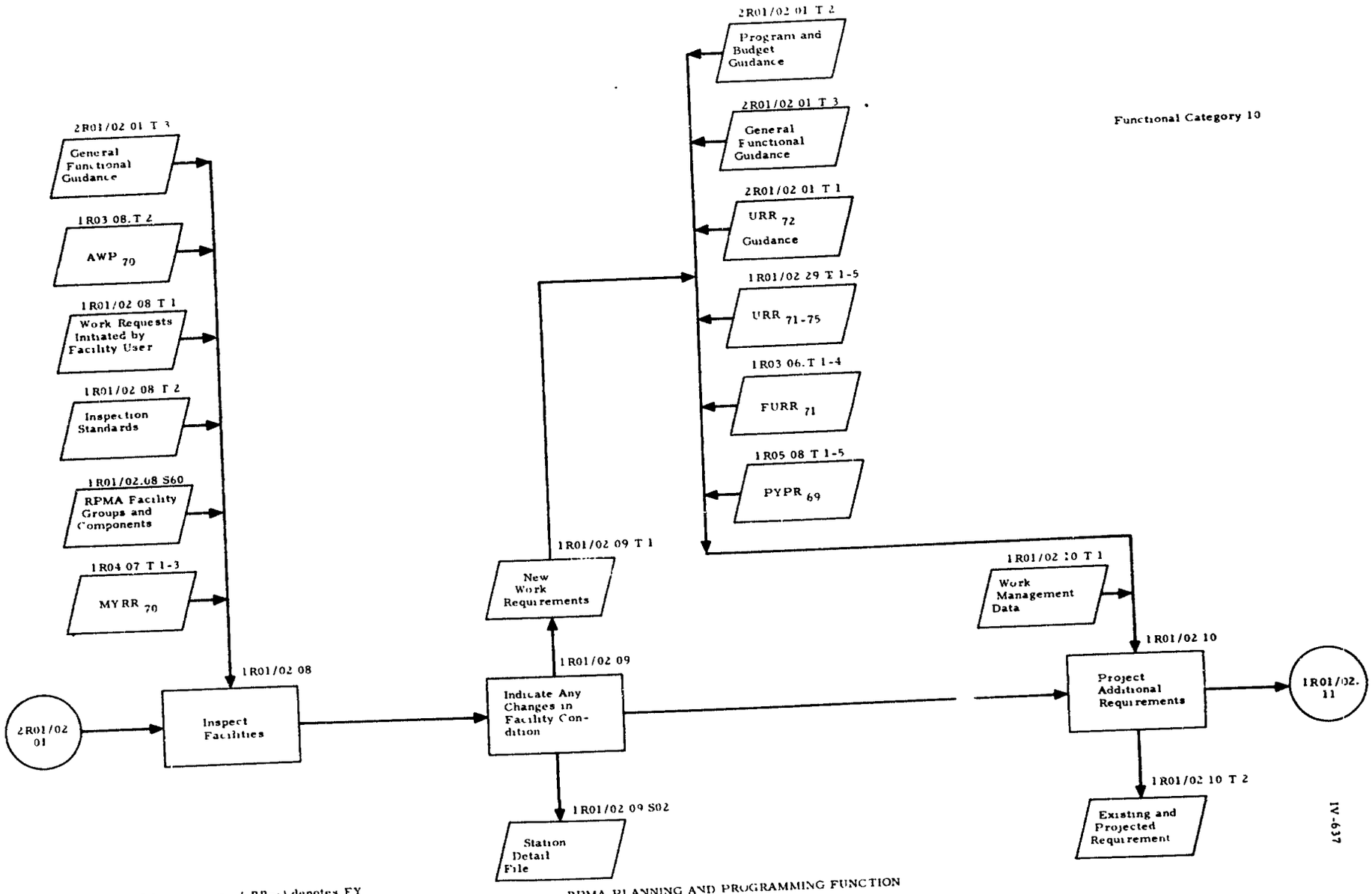

Note Subscript (e.g., RR_{71}) denotes FY (Year of execution FY 72)

RPMA PLANNING AND PROGRAMMING FUNCTION
(INSTALLATION PREPARATION OF THE URR)

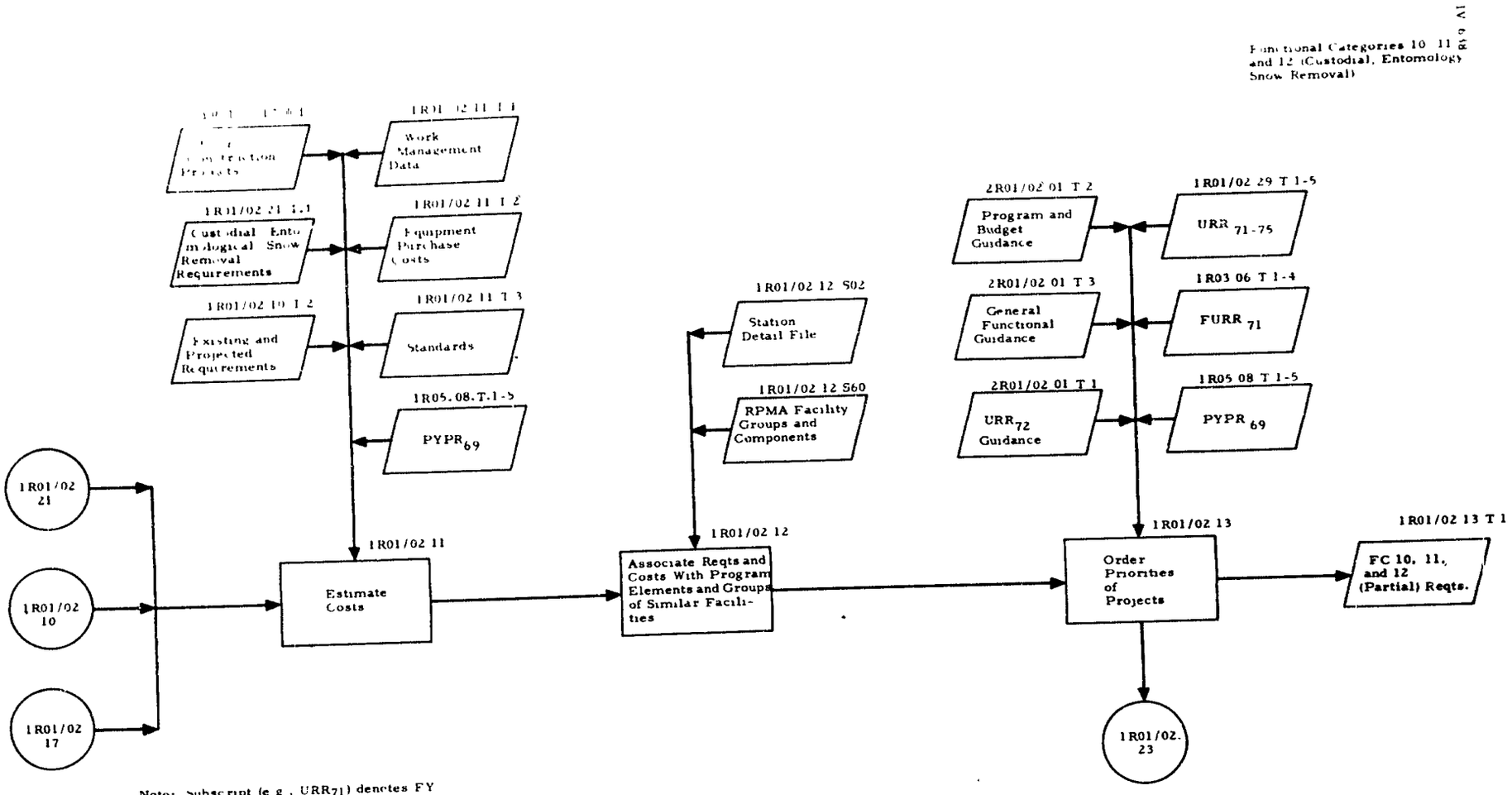

Note: Subscript (e g , URR_{71}) denotes FY (Year of execution: FY72)

RPMA PLANNING AND PROGRAMMING FUNCTION
(INSTALLATION PREPARATION OF THE URR)

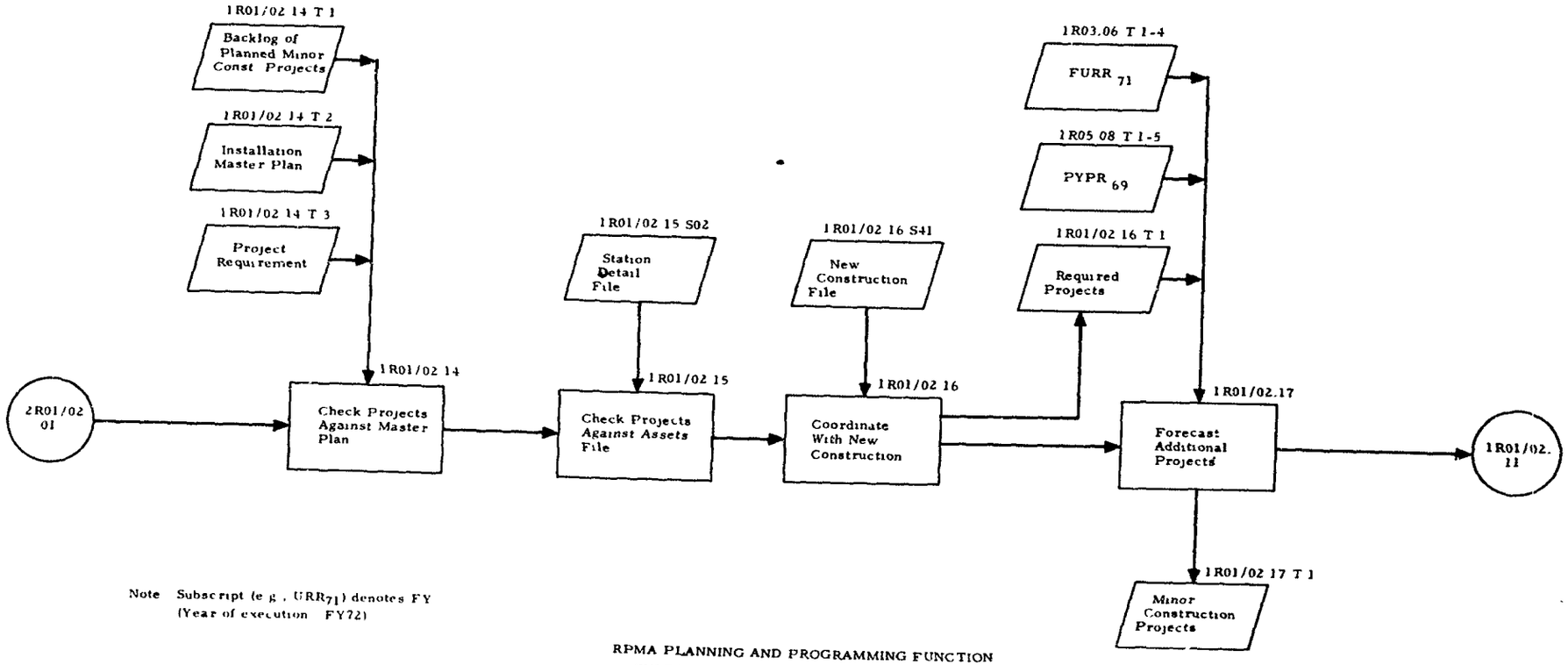

Note Subscript (e g , URR_{71}) denotes FY (Year of execution FY72)

RPMA PLANNING AND PROGRAMMING FUNCTION
(INSTALLATION PREPARATION OF THE URR)

Functional Category 12
(Fire Prevention and Protection)

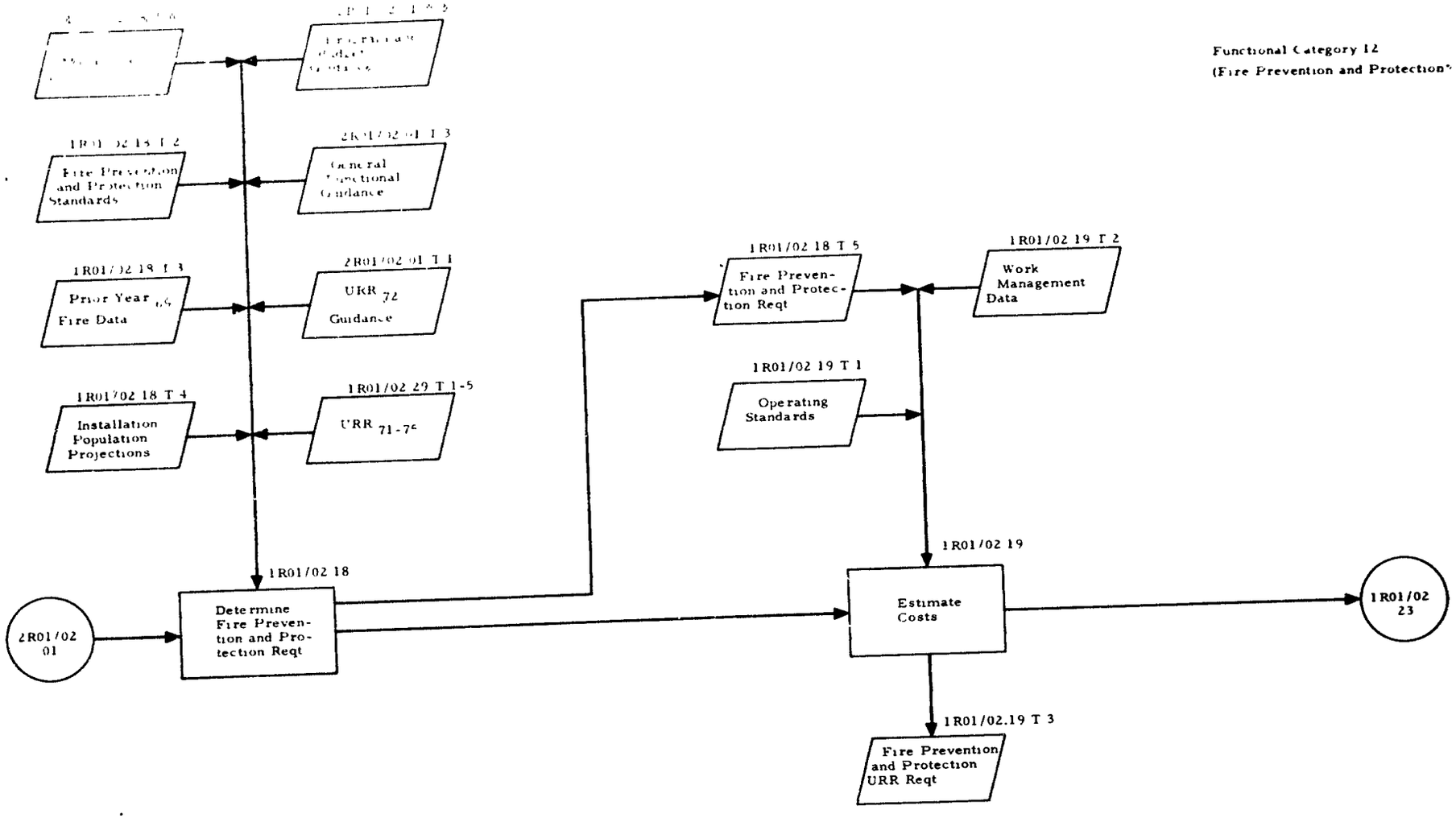

Note Subscript denotes FY
(Year of execution FY72)

RPMA PLANNING AND PROGRAMMING FUNCTION
(INSTALLATION PREPARATION OF THE URR)

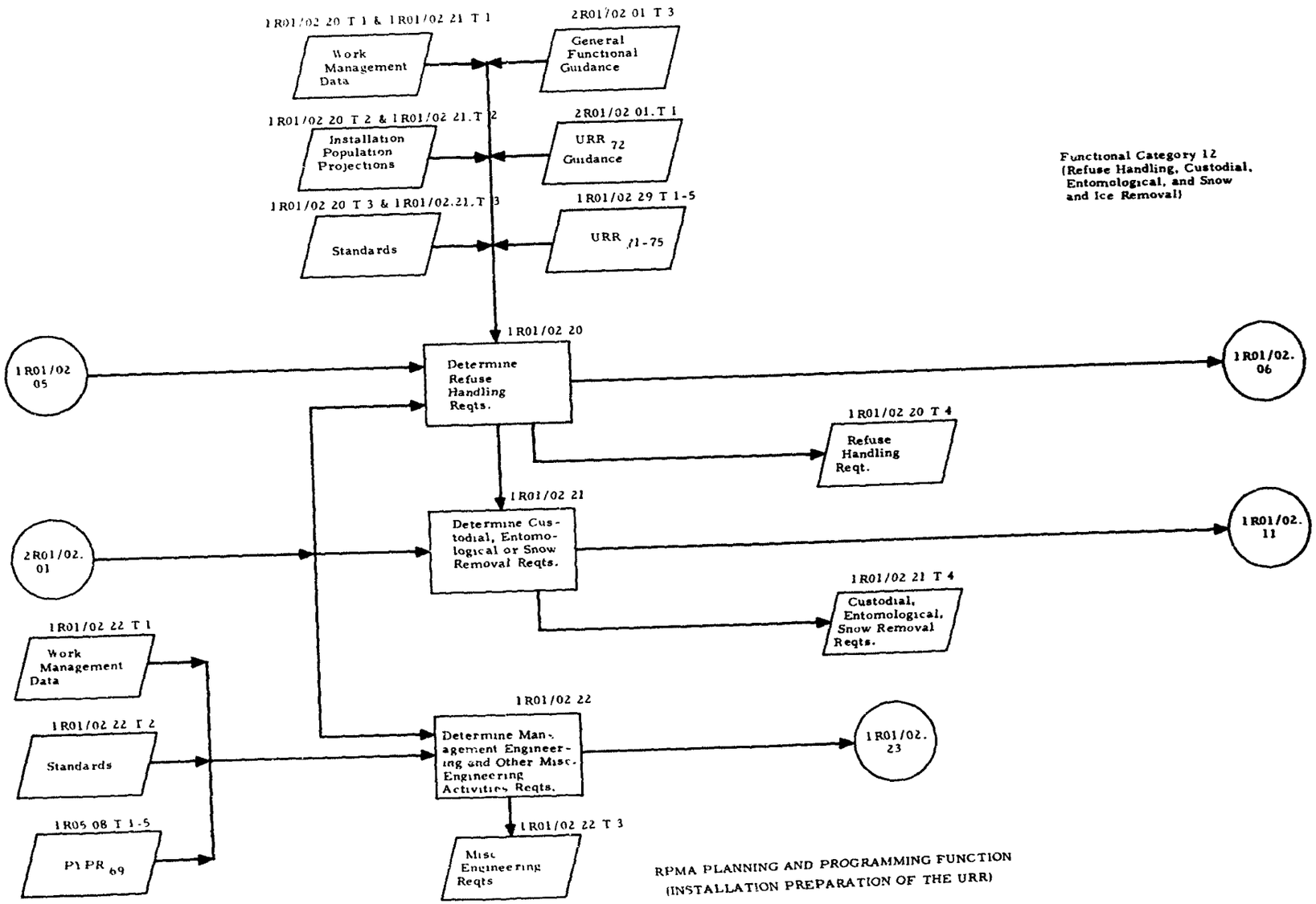

RPMA PLANNING AND PROGRAMMING FUNCTION
(INSTALLATION PREPARATION OF THE URR)

Note Subscript (e.g., URR71) denotes FY
(Year of execution: FY72)

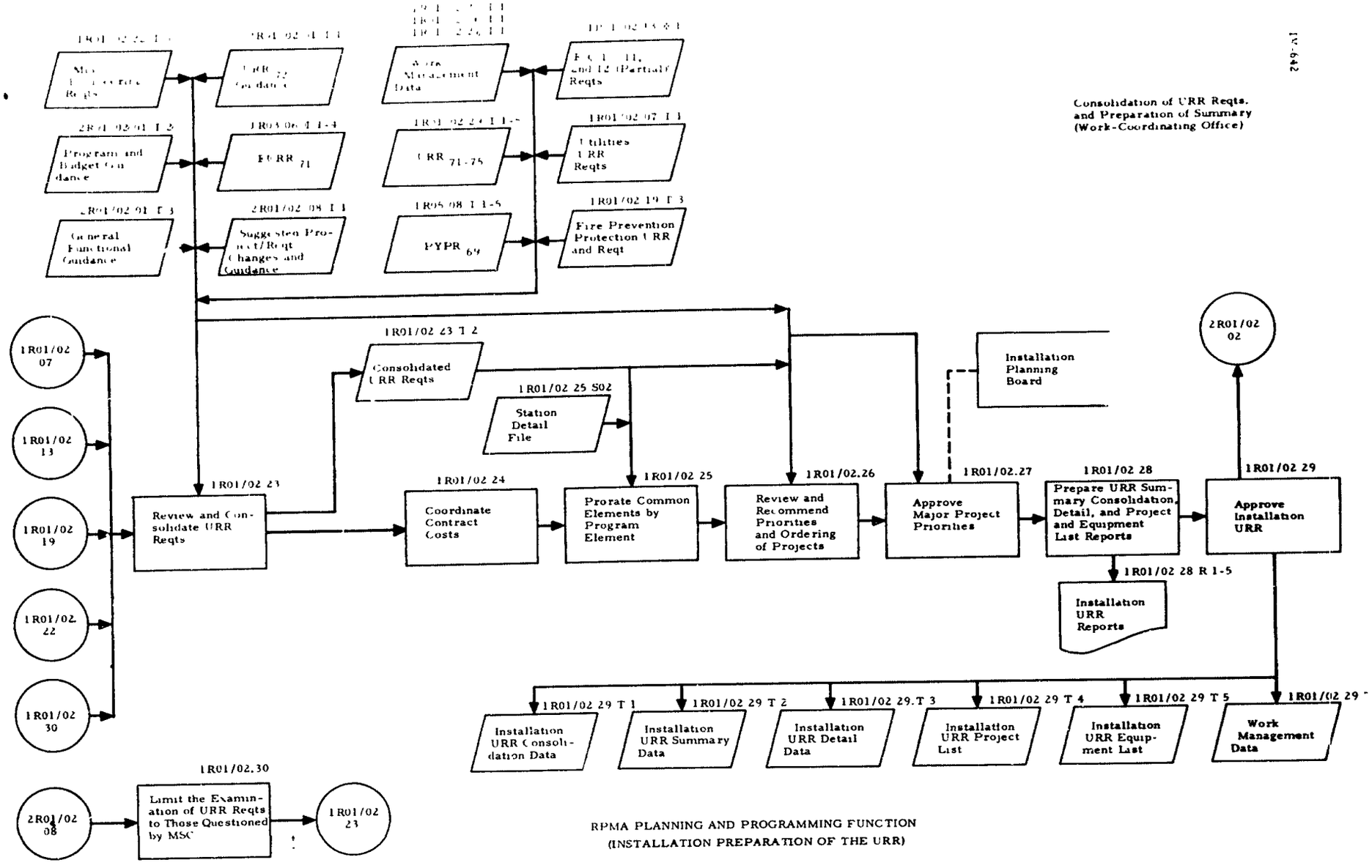

RPMA PLANNING AND PROGRAMMING FUNCTION
(INSTALLATION PREPARATION OF THE URR)

Note Subscript denotes FY
(Year of Execution FY72)

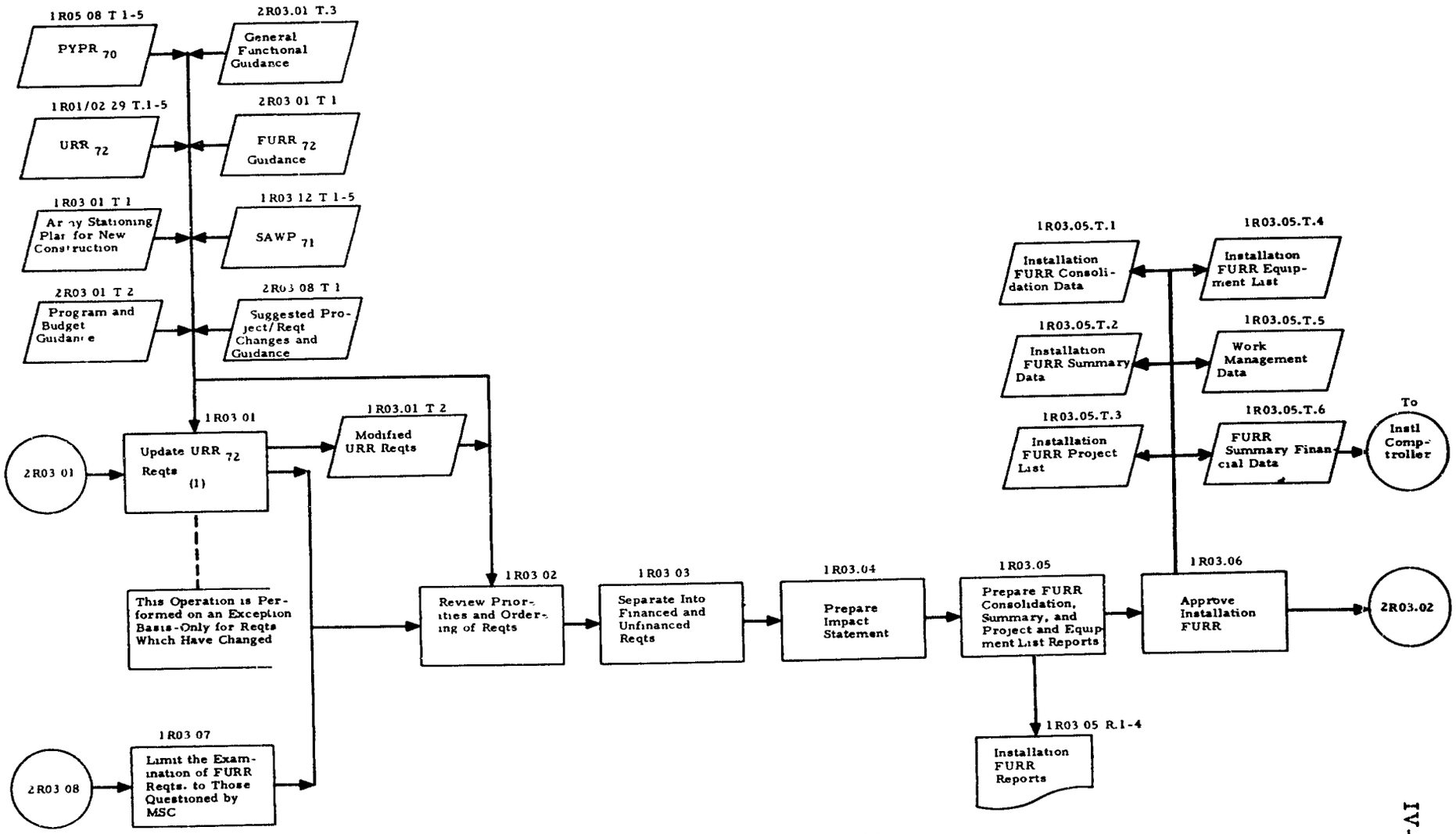

Note: Subscript denotes FY
(Year of execution: FY72)
(1) Refer to the applicable operations described in planning and programming function.

RPMA BUDGETING FUNCTION
(INSTALLATION PREPARATION OF THE FURR)

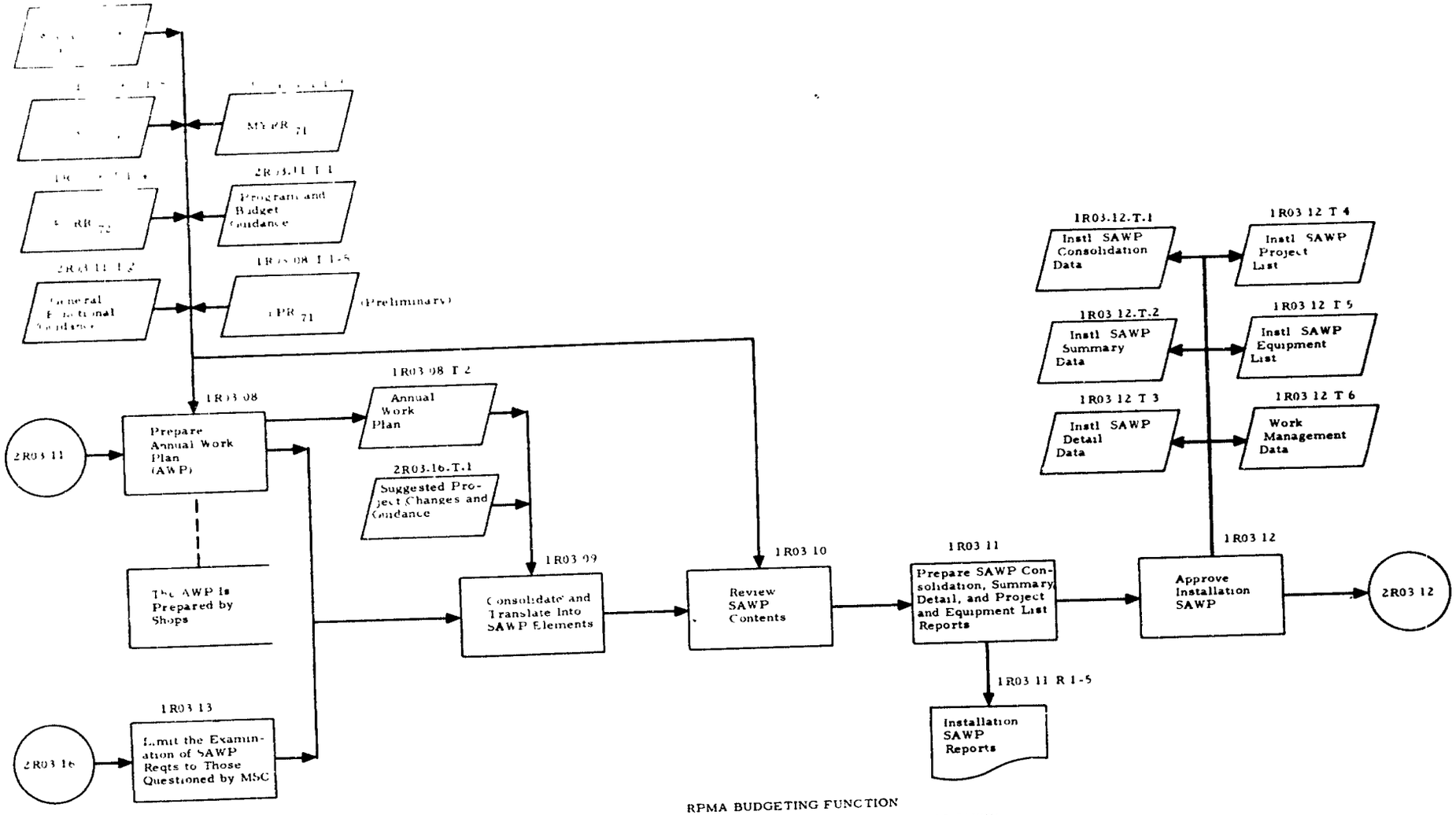

Note: Subscript denotes FY (Year of execution - FY72)

RPMA BUDGETING FUNCTION
(INSTALLATION PREPARATION OF THE SAWP)

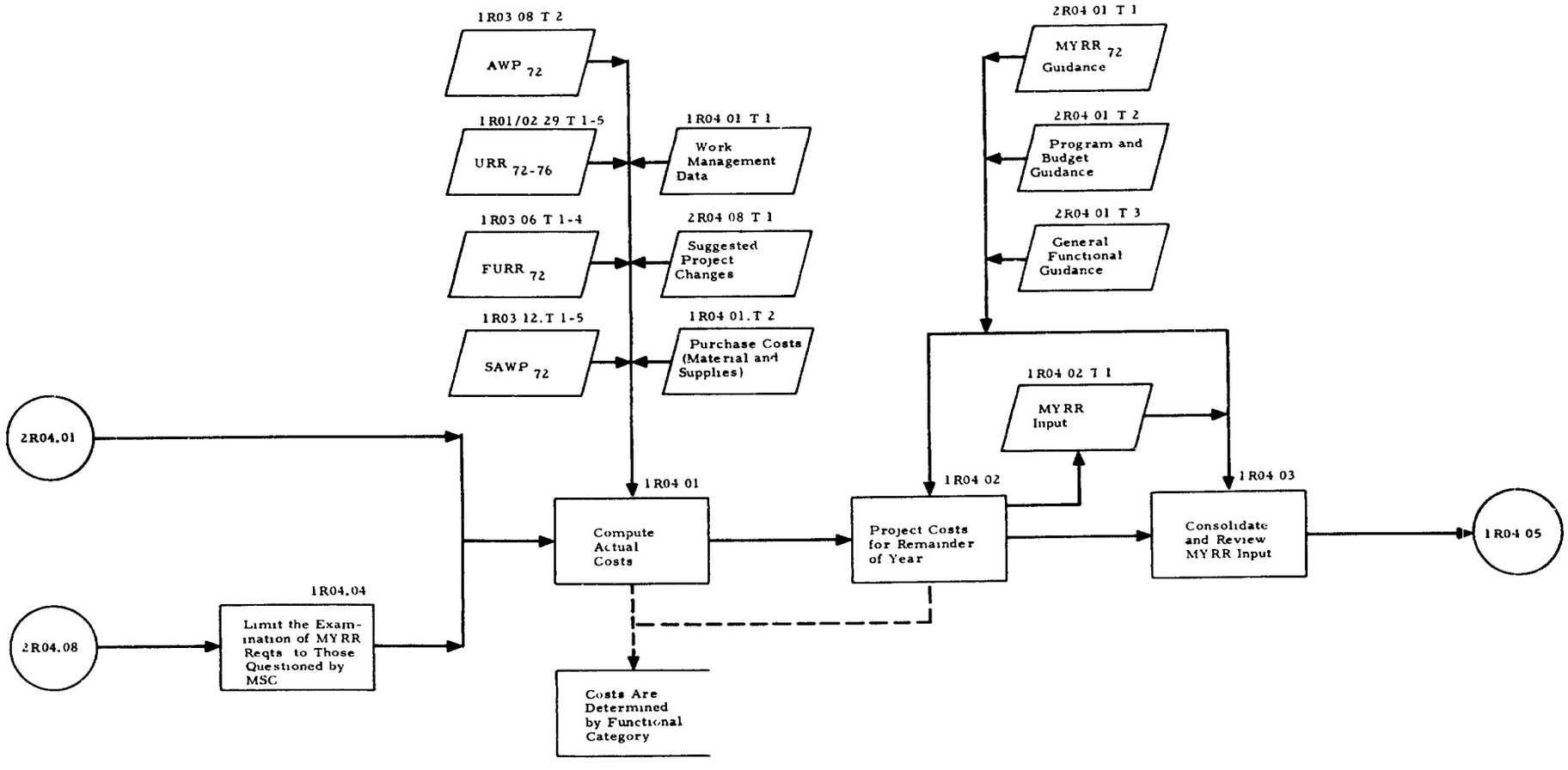

Note Subscript (e.g., URR_{71}) denotes FY (Year of execution: FY72)

RPMA EXECUTION FUNCTION
(INSTALLATION PREPARATION OF THE MYRR)

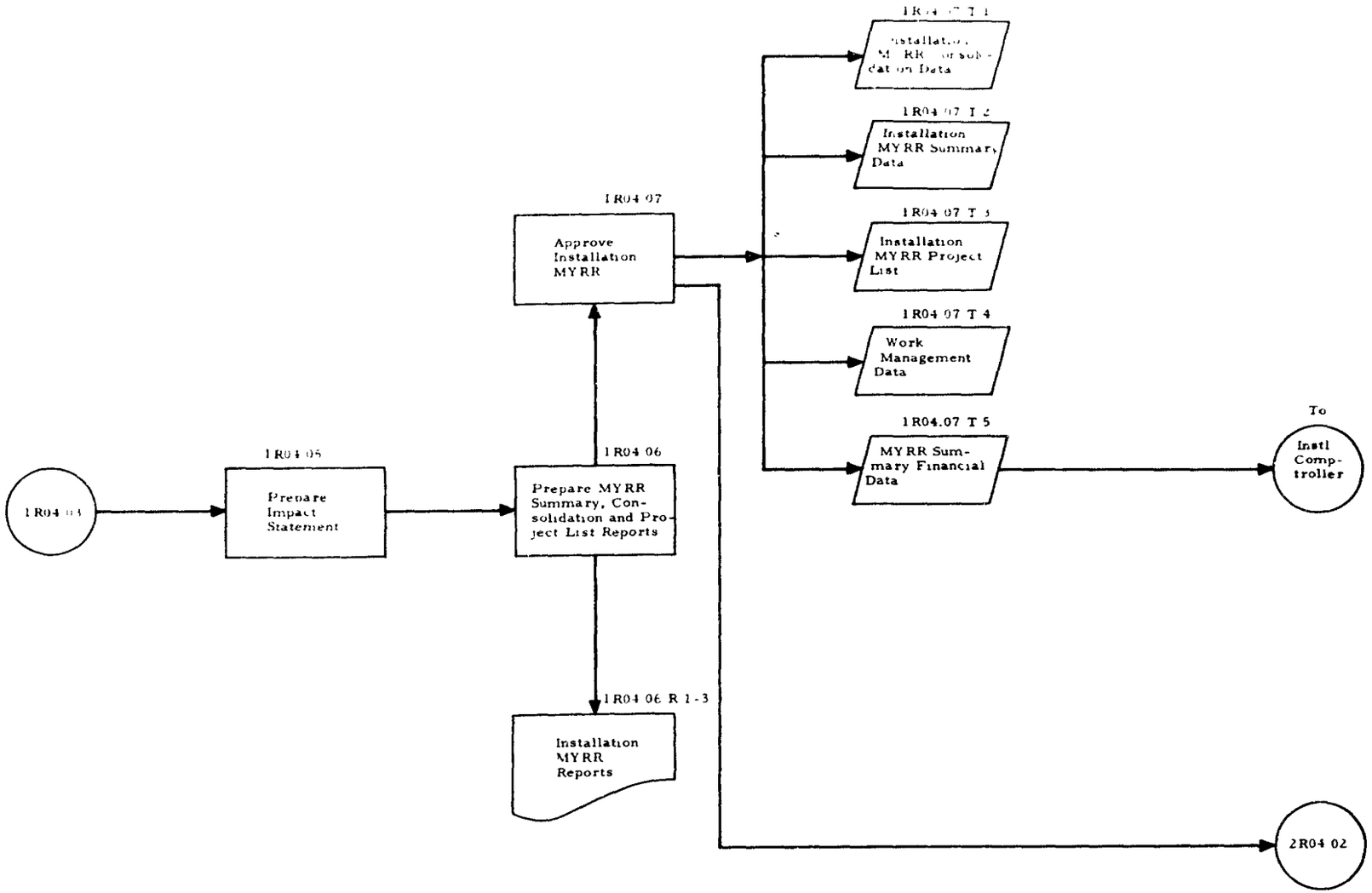

RPMA EXECUTION FUNCTION
(INSTALLATION PREPARATION OF THE MYRR)

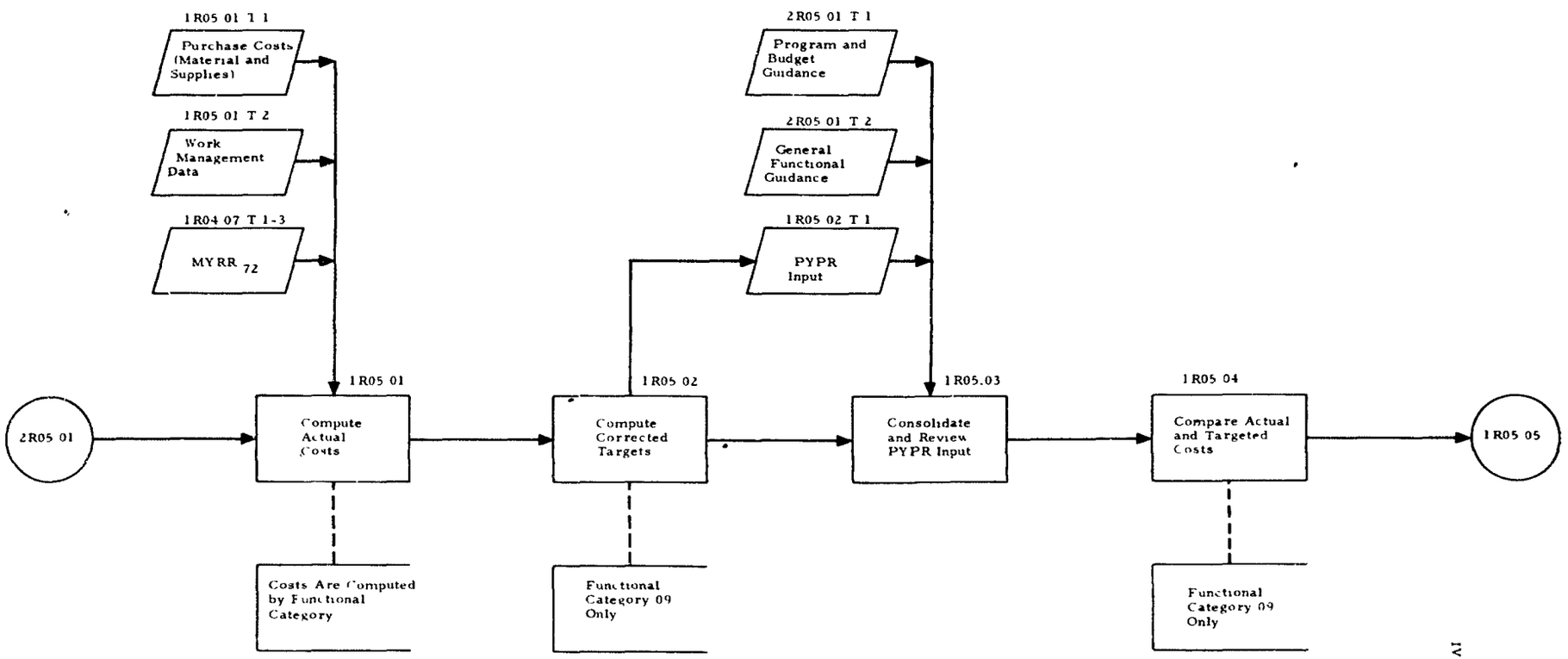

Note Subscript (e.g., RR_{71}) denotes FY (Year of execution FY72)

RPMA REVIEW FUNCTION
(INSTALLATION PREPARATION OF THE PYPR)

IV-647

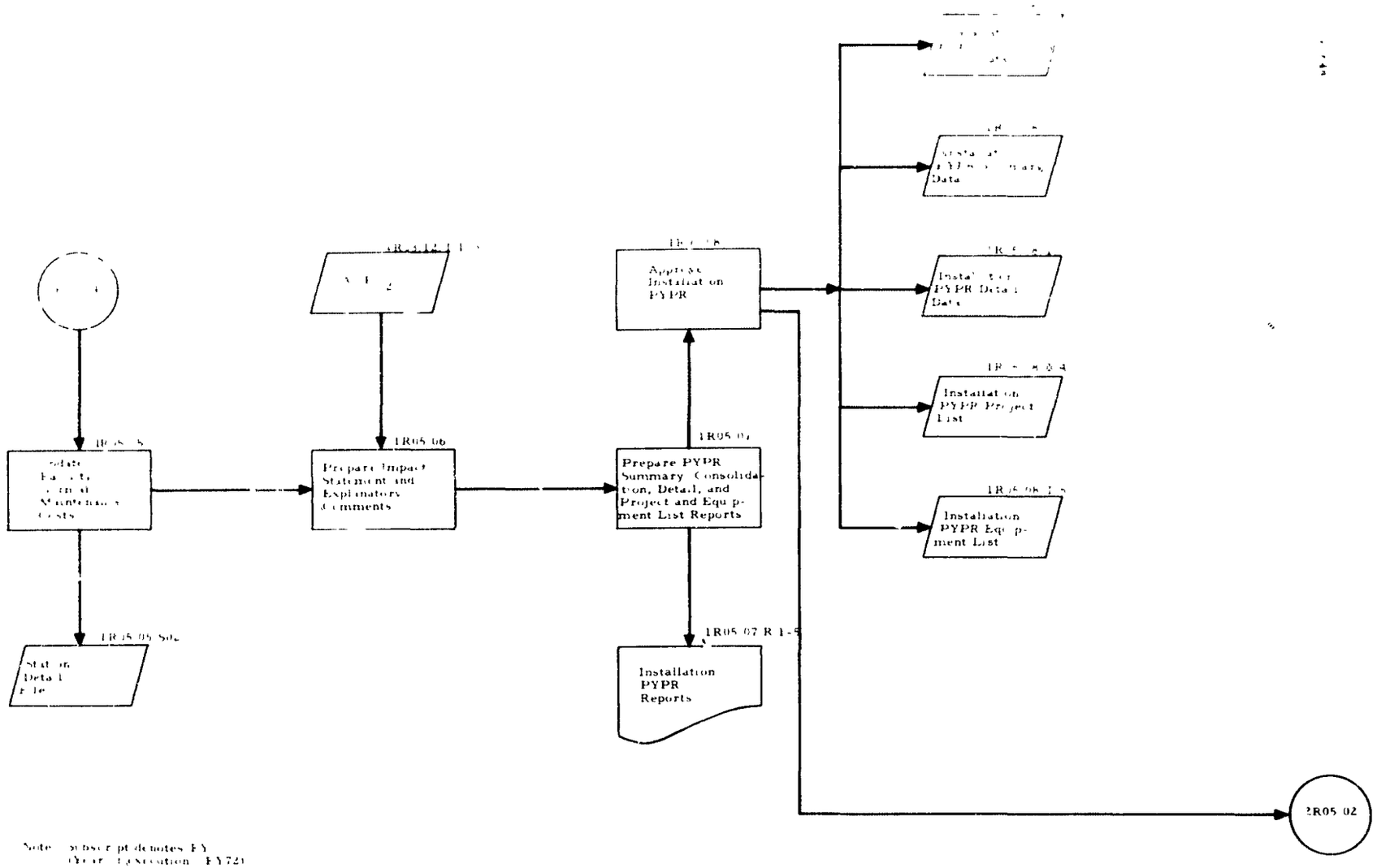

Note: subscript denotes FY (Year 1 execution = FY72)

RPMA REVIEW FUNCTION
(INSTALLATION PREPARATION OF THE PYPR)

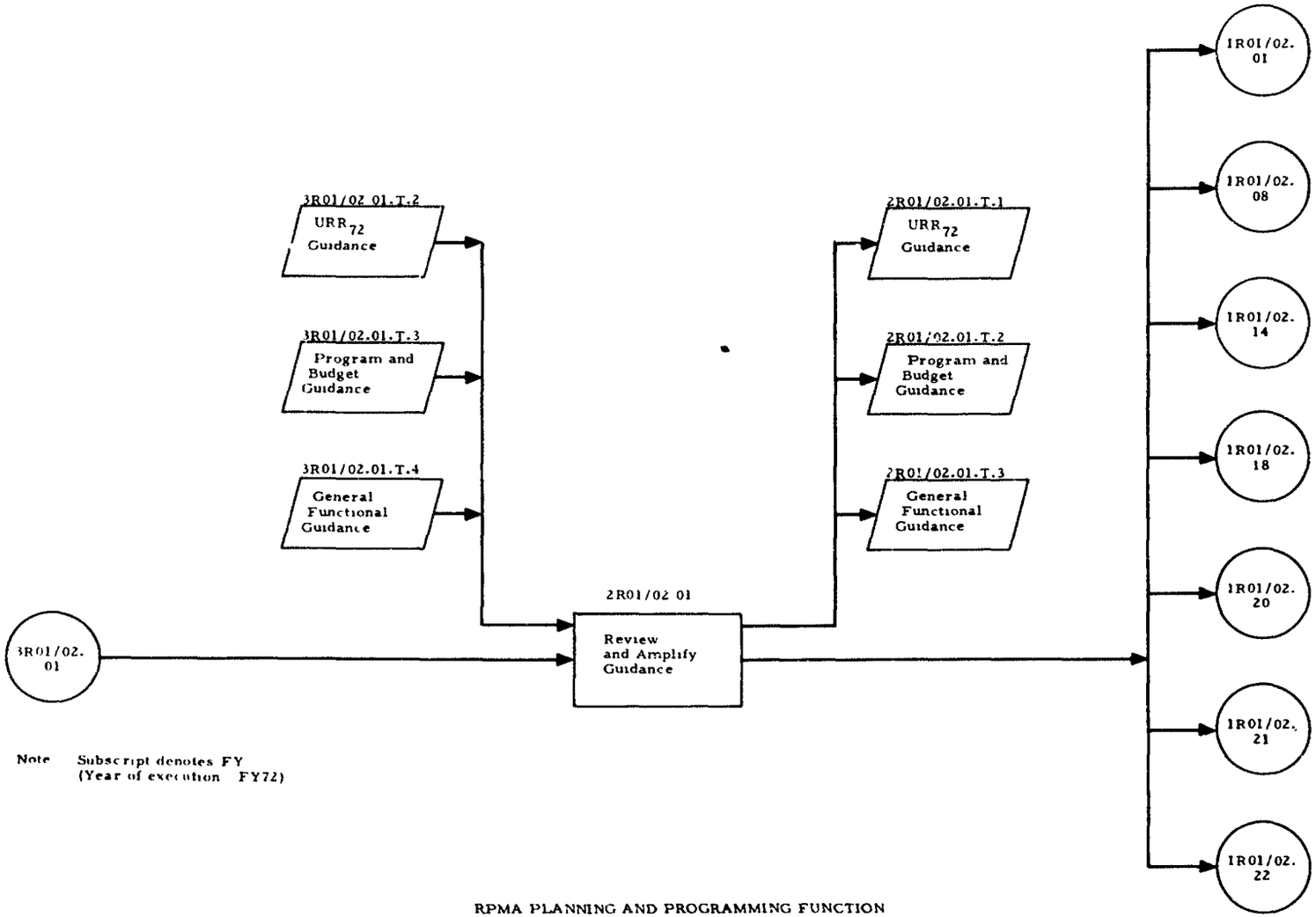

Note Subscript denotes FY (Year of execution FY72)

RPMA PLANNING AND PROGRAMMING FUNCTION
(MSC PREPARATION OF THE URR)

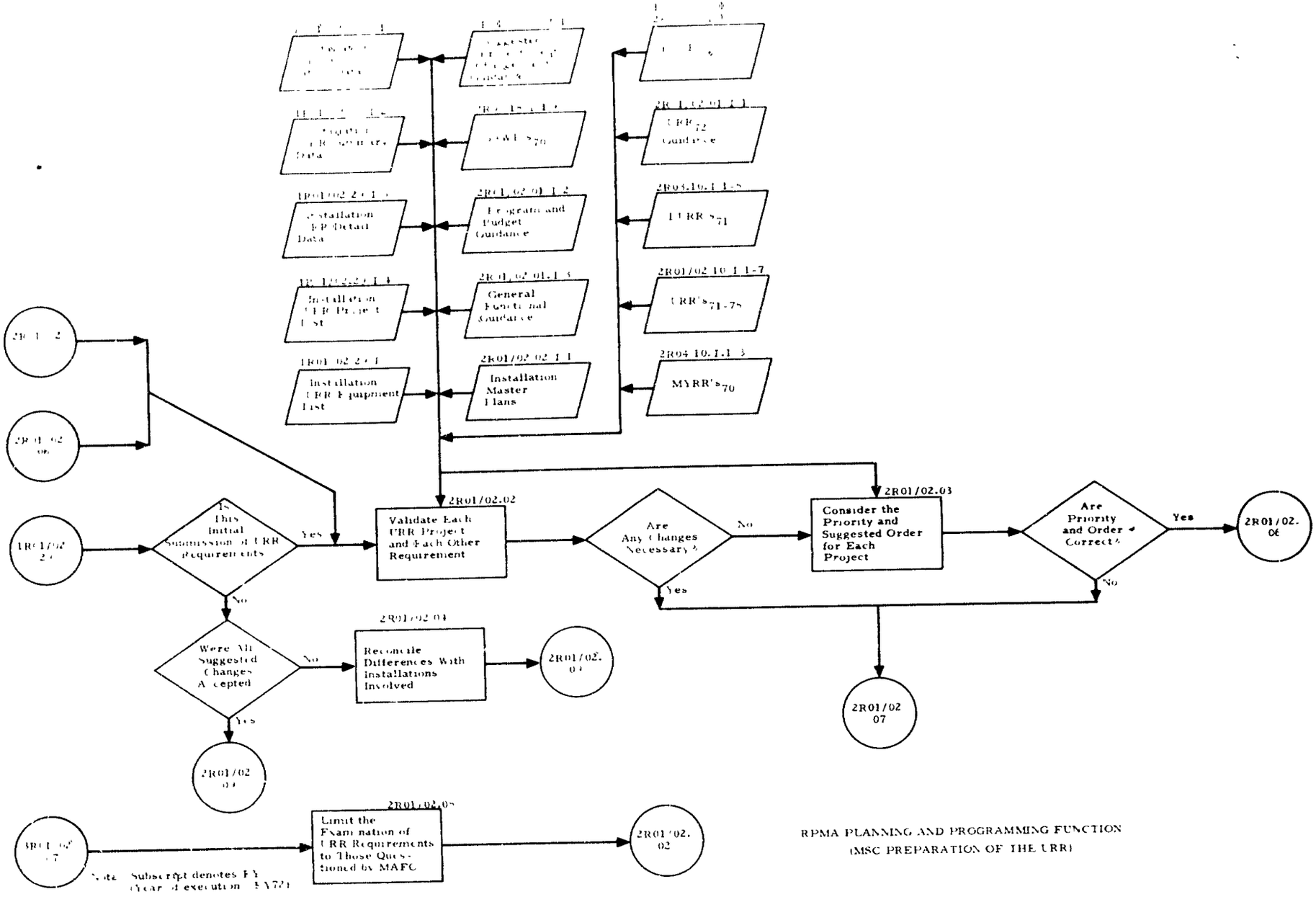

RPMA PLANNING AND PROGRAMMING FUNCTION
(MSC PREPARATION OF THE URR)

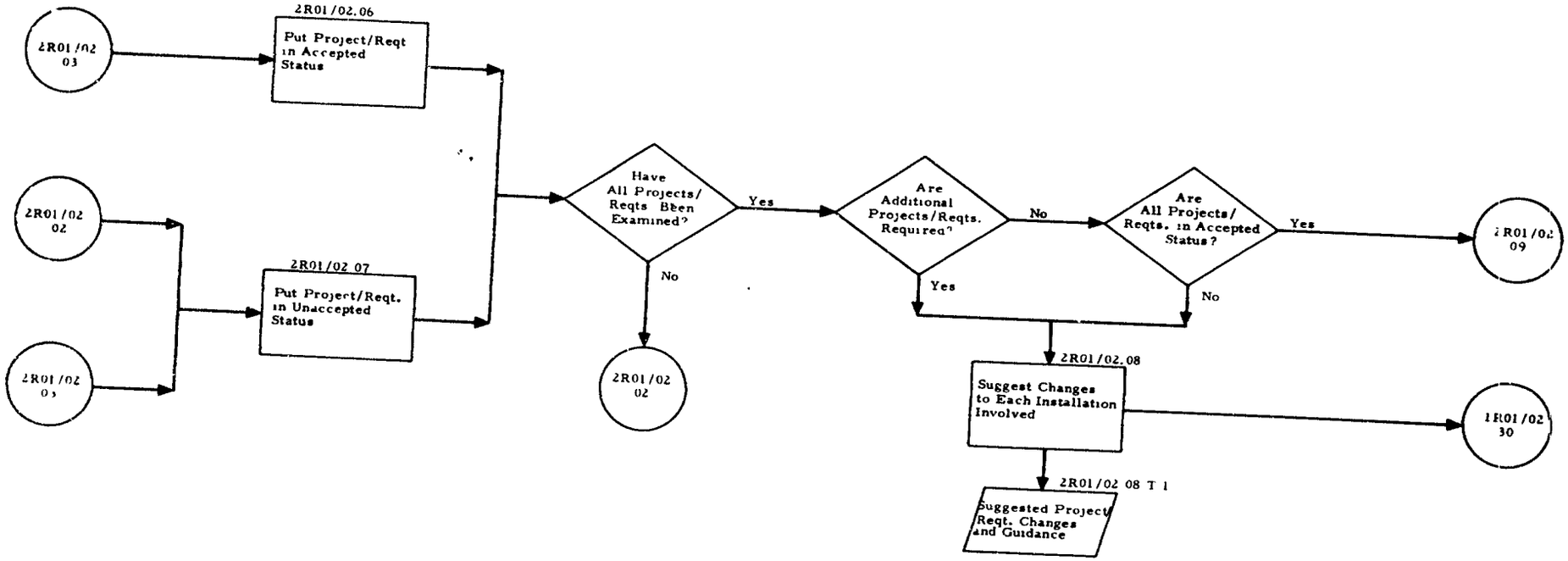

RPMA PLANNING AND PROGRAMMING FUNCTION
(MSC PREPARATION OF THE URR)

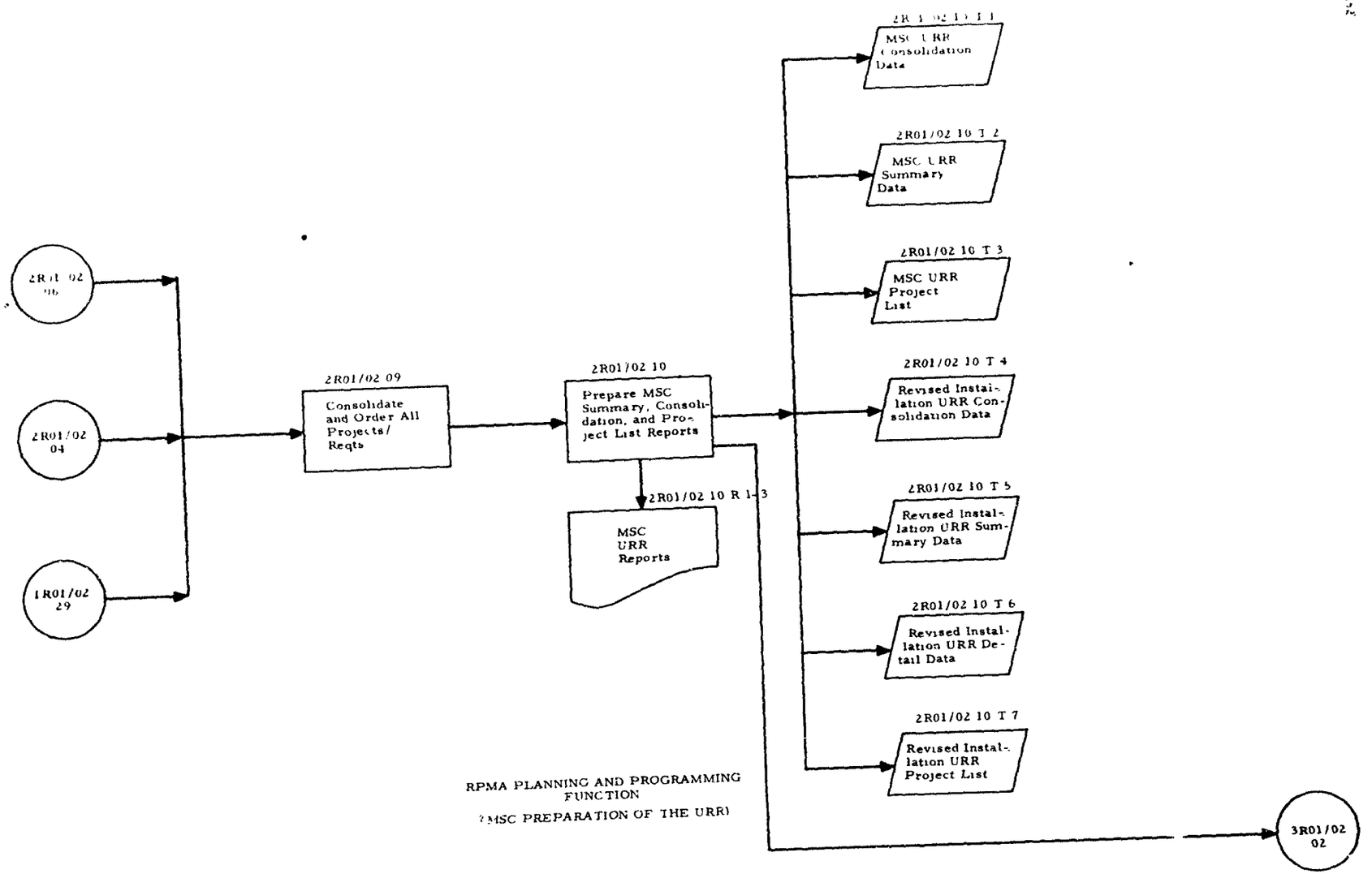

RPMA PLANNING AND PROGRAMMING FUNCTION

(MSC PREPARATION OF THE URR)

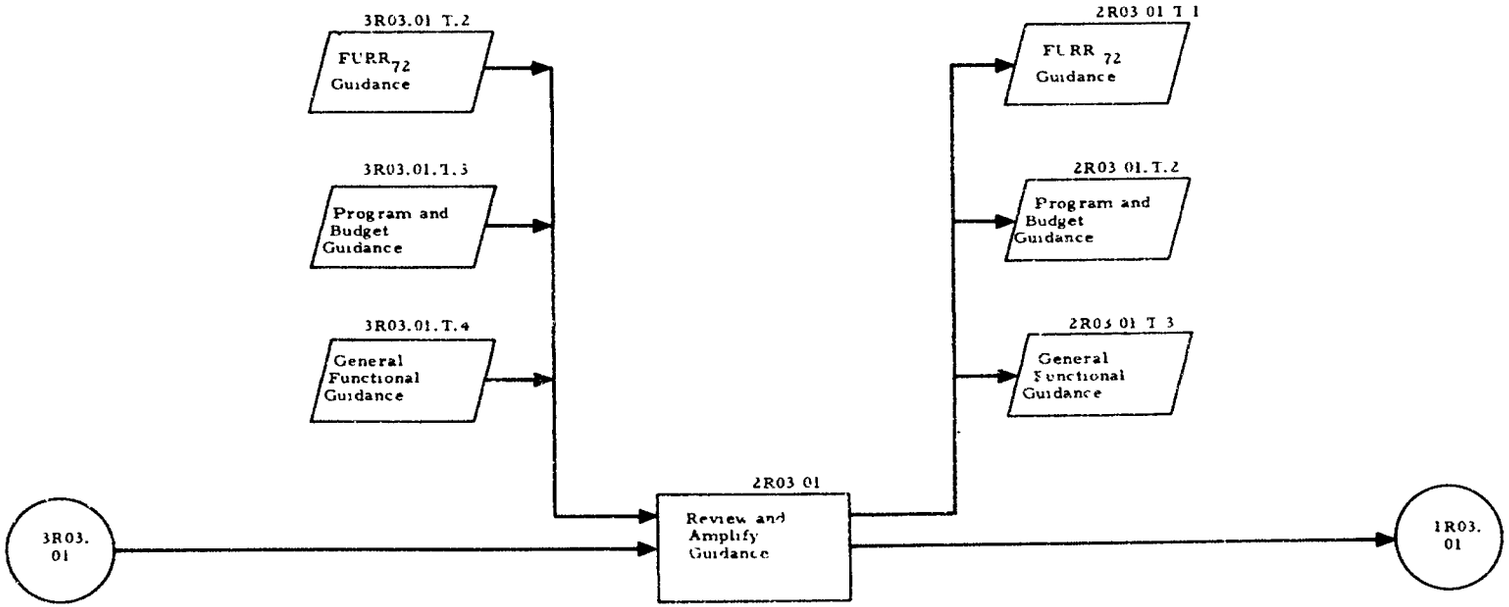

RPMA BUDGETING FUNCTION
(MSC PREPARATION OF THE FURR)

Note Subscript denotes FY.
(Year of execution FY72)

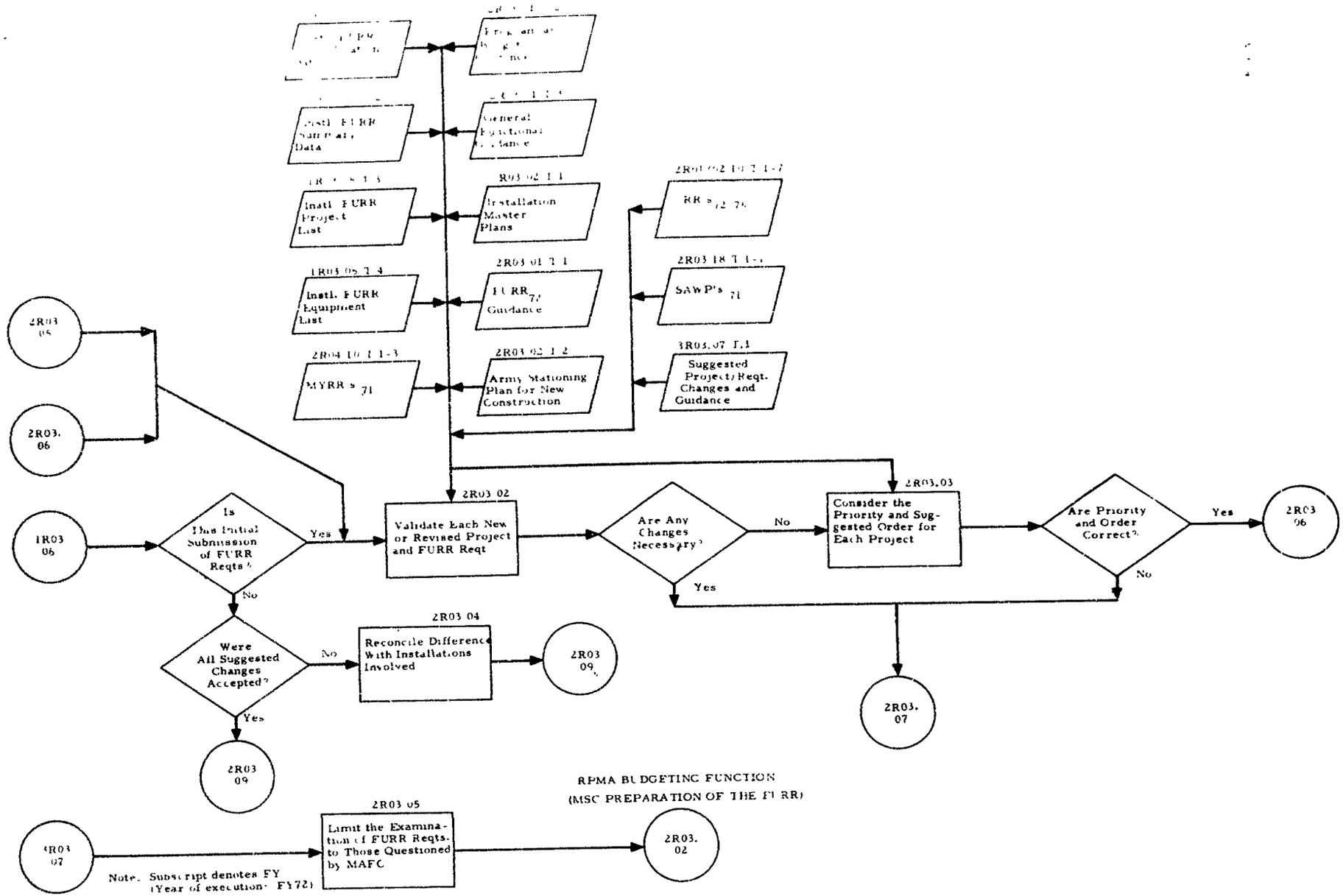
Installation Master Plans
Instl. FURR Project List
Instl. FURR Equipment List
Army Stationing Plan for New Construction
Suggested Project/Reqt. Changes and Guidance
2R03 06
2R03. 06
1R03 06
Is This Initial Submission of FURR Reqts?
Yes
No
2R03 02
Validate Each New or Revised Project and FURR Reqt
Are Any Changes Necessary?
No
Yes
2R03.03
Consider the Priority and Suggested Order for Each Project
Are Priority and Order Correct?
Yes
No
2R03 06
2R03. 07
Were All Suggested Changes Accepted?
No
Yes
2R03 04
Reconcile Differences With Installations Involved
2R03 09
2R03 09
1R03 07
2R03 05
Limit the Examination of FURR Reqts. to Those Questioned by MAFC
2R03. 02
Note. Subscript denotes FY (Year of execution- FY72)
RPMA BUDGETING FUNCTION
(MSC PREPARATION OF THE FURR)

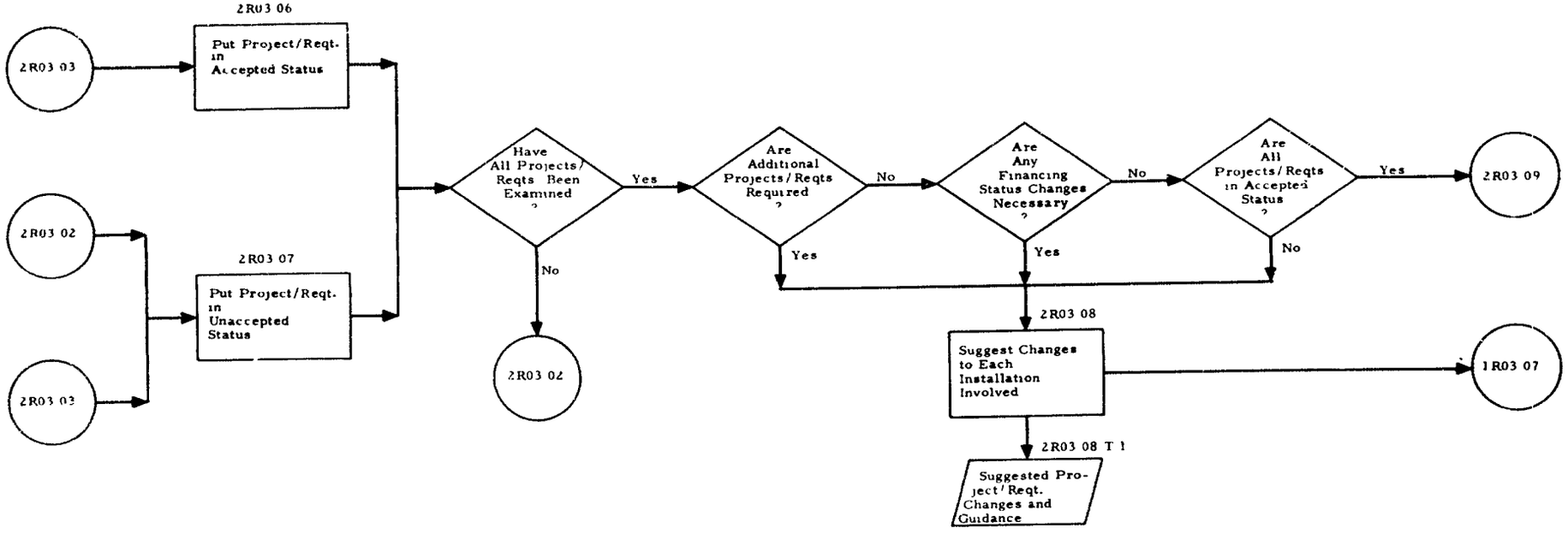

RPMA BUDGETING FUNCTION
(MSC PREPARATION OF THE FURR)

IV-655

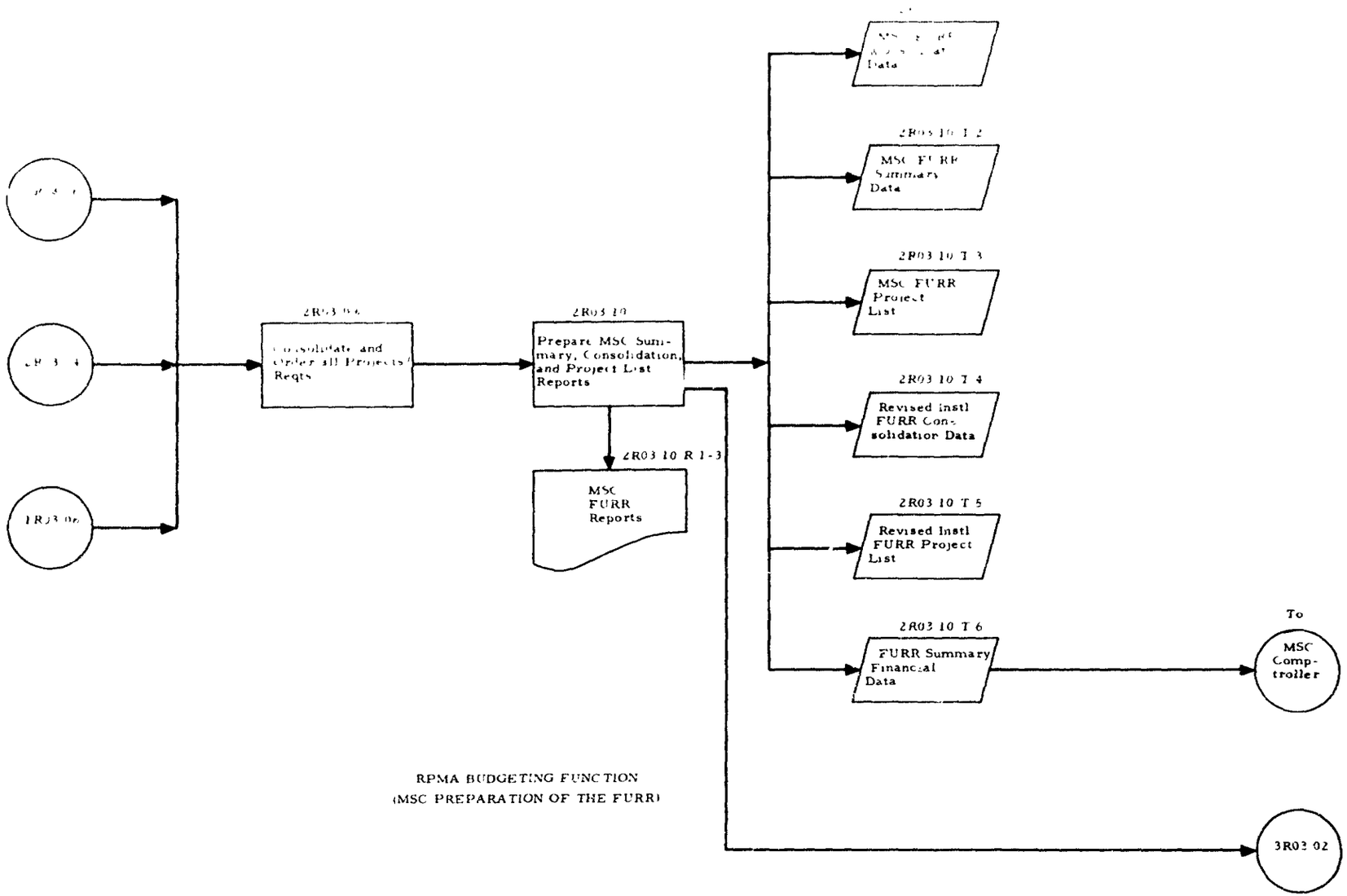

RPMA BUDGETING FUNCTION
(MSC PREPARATION OF THE FURR)

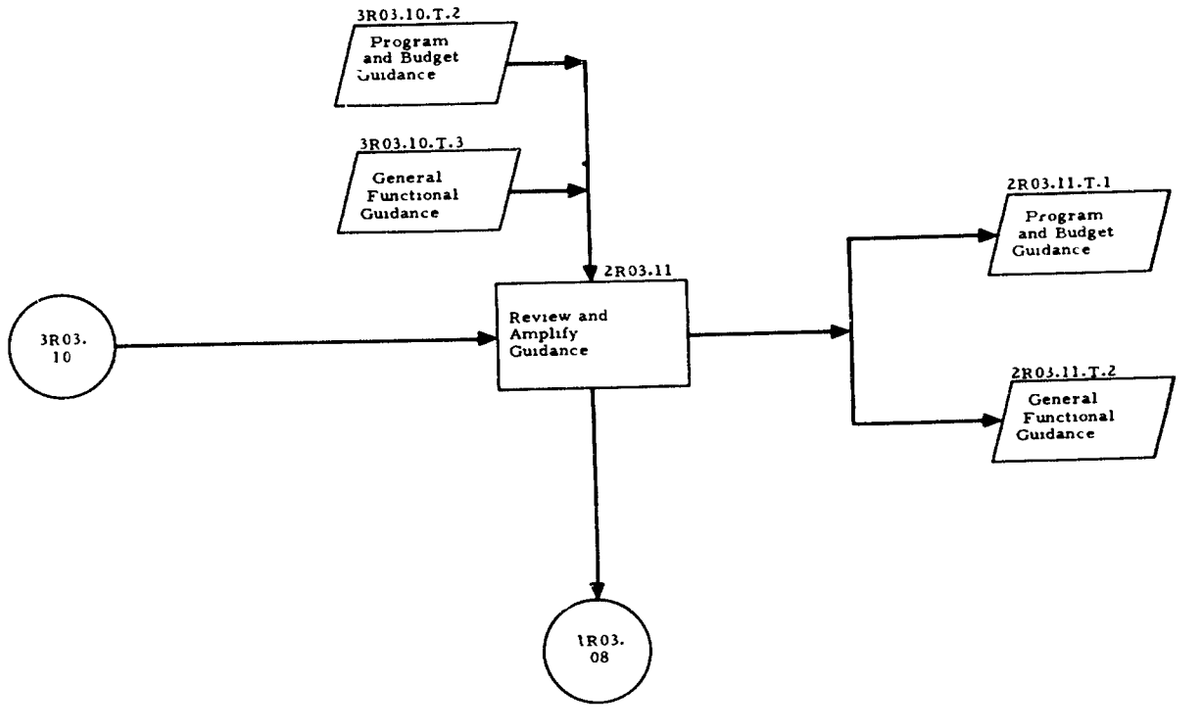

RPMA BUDGETING FUNCTION
(MSC PREPARATION OF THE SAWP)

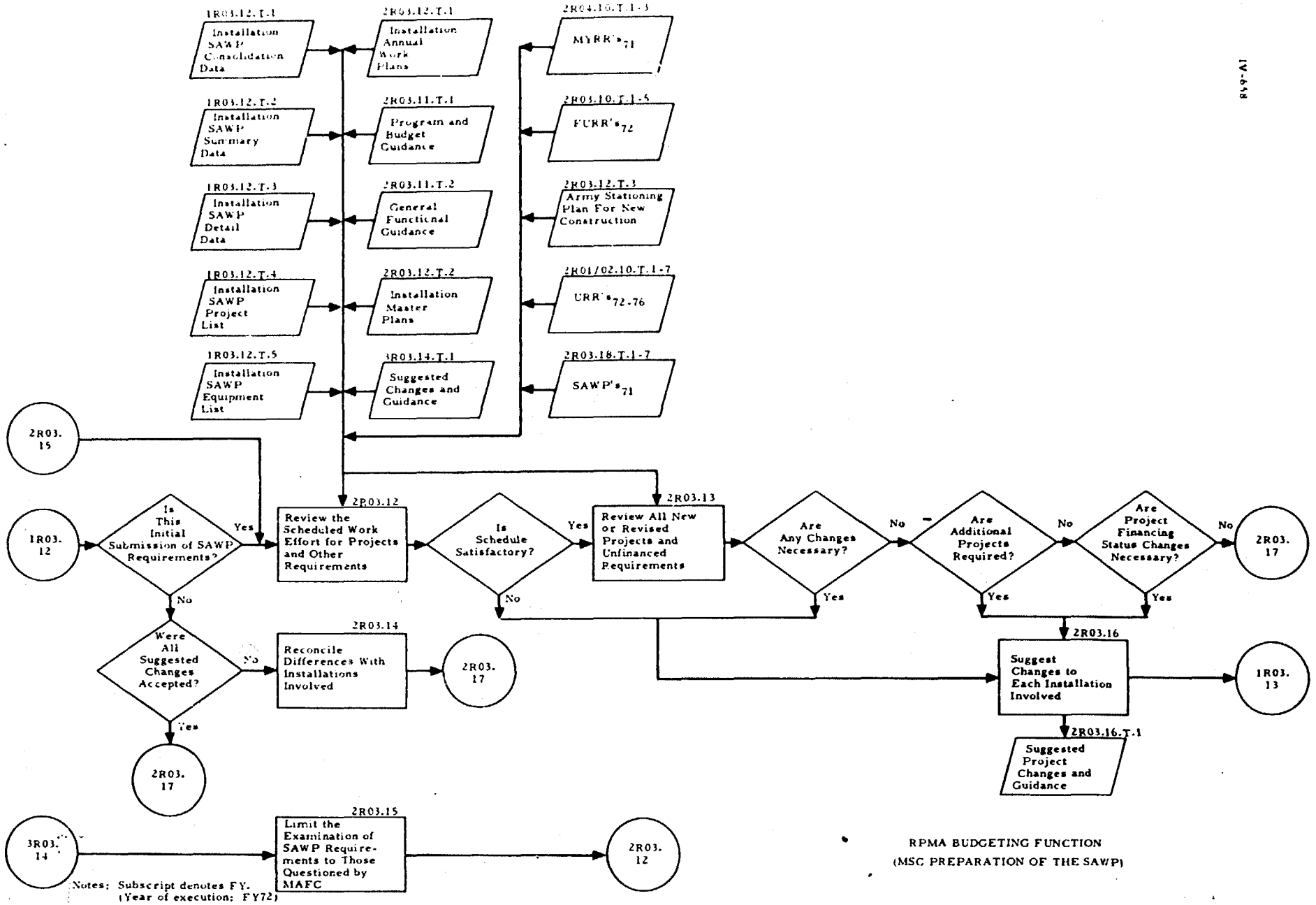

Notes: Subscript denotes FY. (Year of execution: FY72)

RPMA BUDGETING FUNCTION
(MSC PREPARATION OF THE SAWP)

Best Available Copy

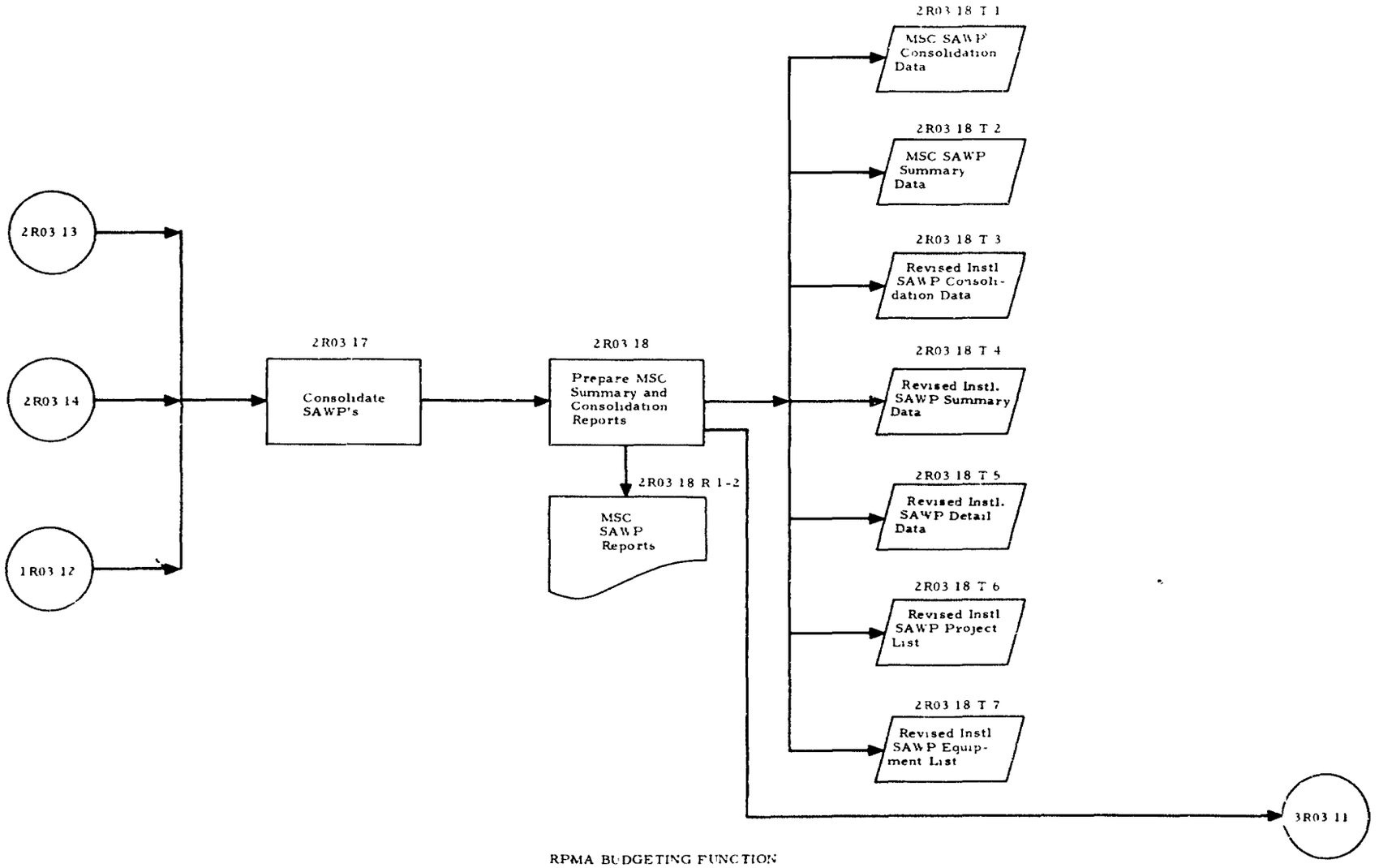

RPMA BUDGETING FUNCTION
(MSC PREPARATION OF THE SAWP)

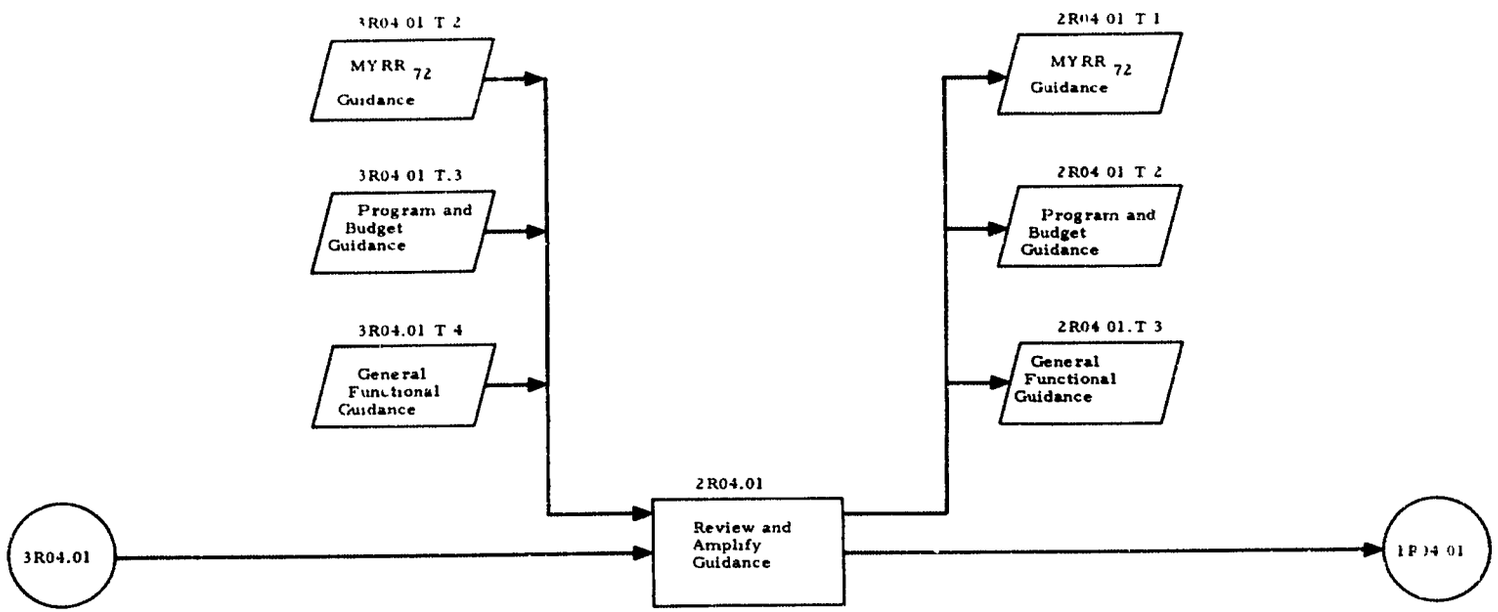

Note: Subscript denotes FY
(Year of execution: FY72)

RPMA EXECUTION FUNCTION

(MSC PREPARATION OF THE MYRR)

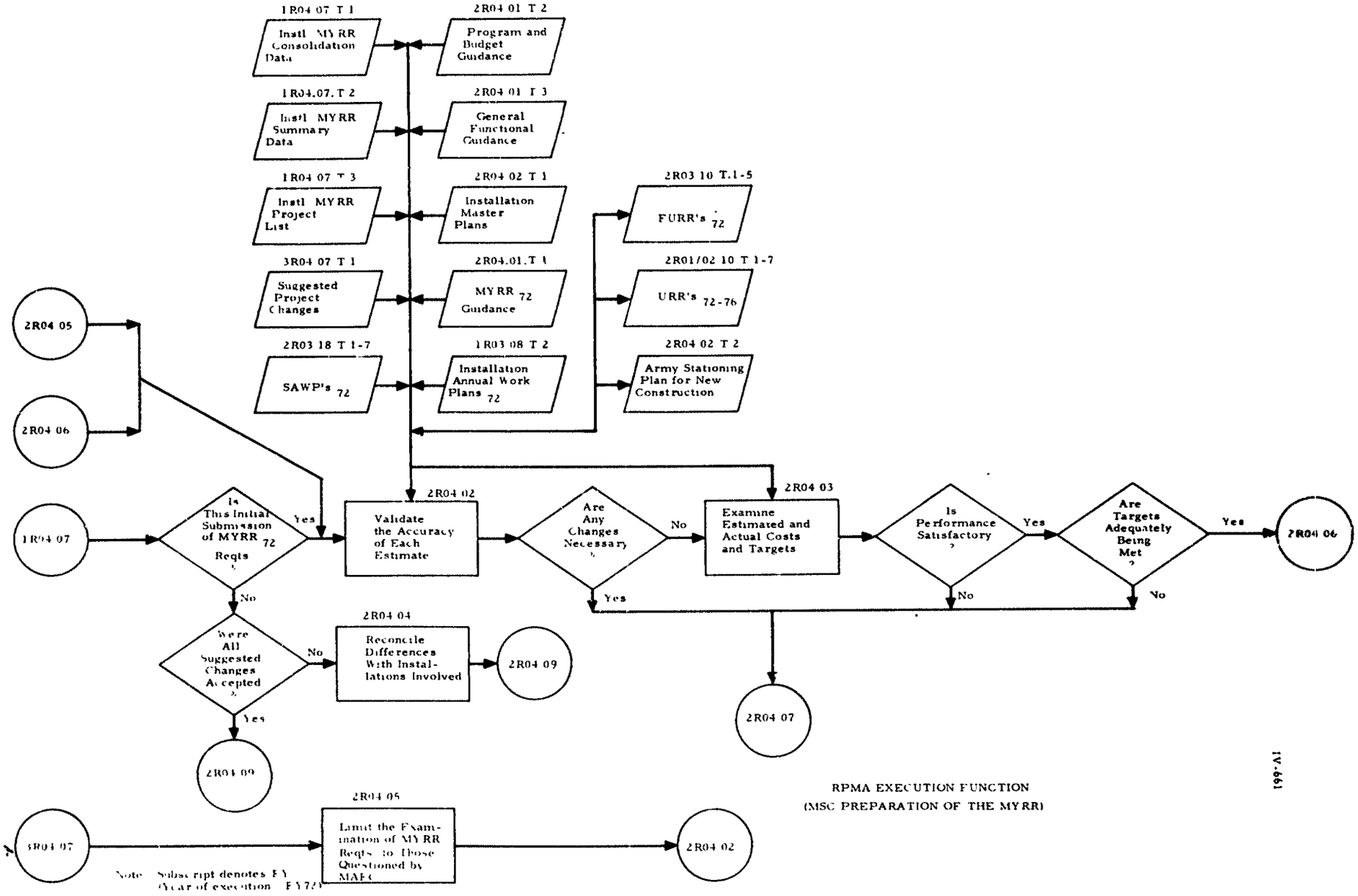

RPMA EXECUTION FUNCTION
(MSC PREPARATION OF THE MYRR)

IV-661

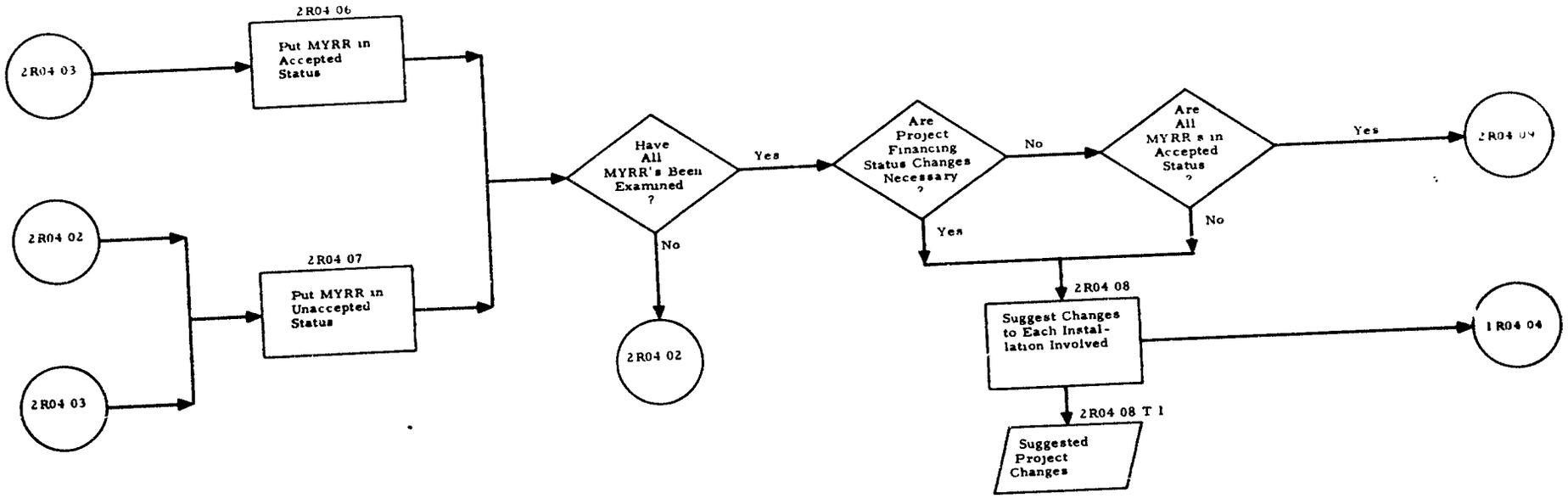

RPMA EXECUTION FUNCTION
(MSC PREPARATION OF THE MYRR)

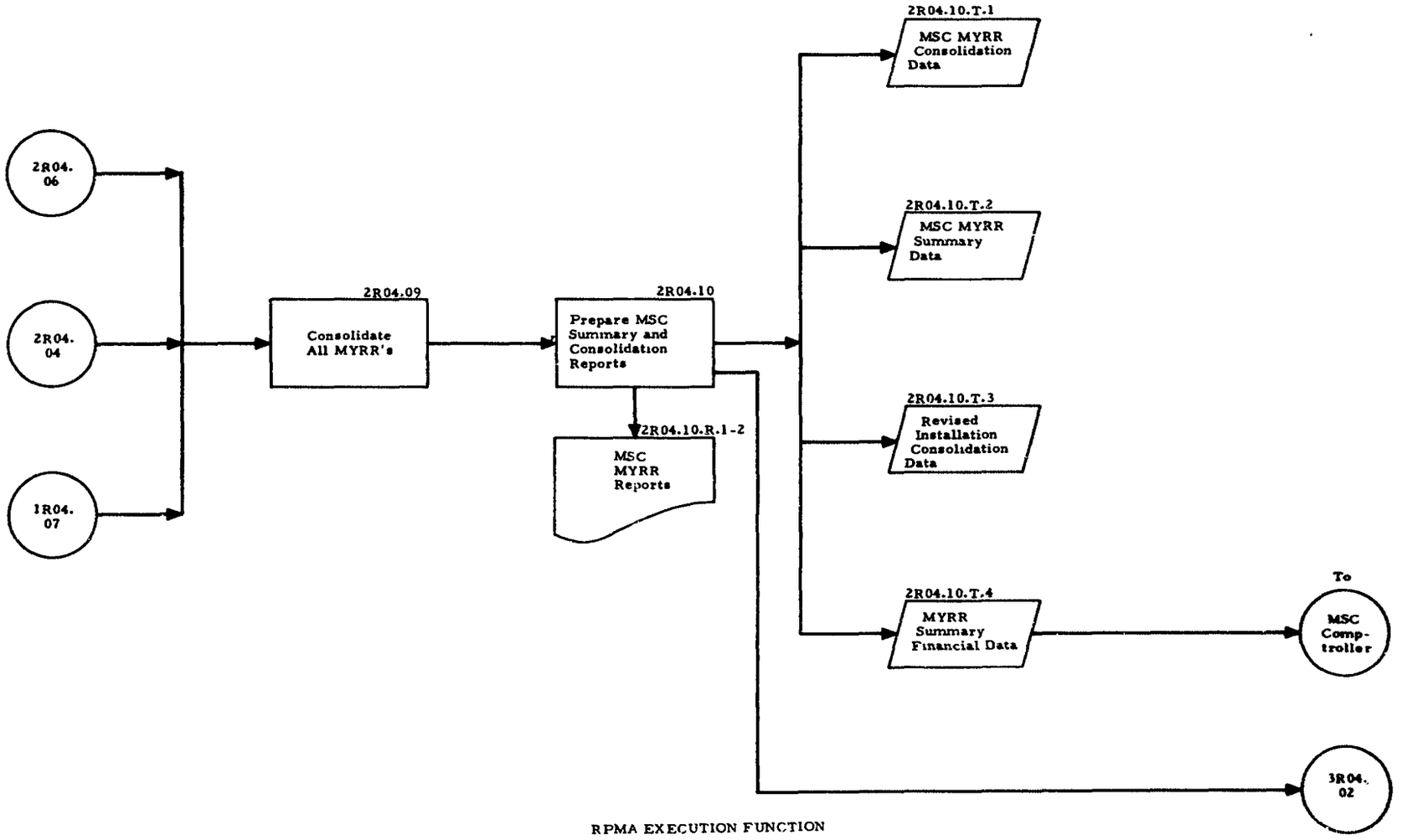

RPMA EXECUTION FUNCTION
(MSC PREPARATION OF THE MYRR)

IV-663

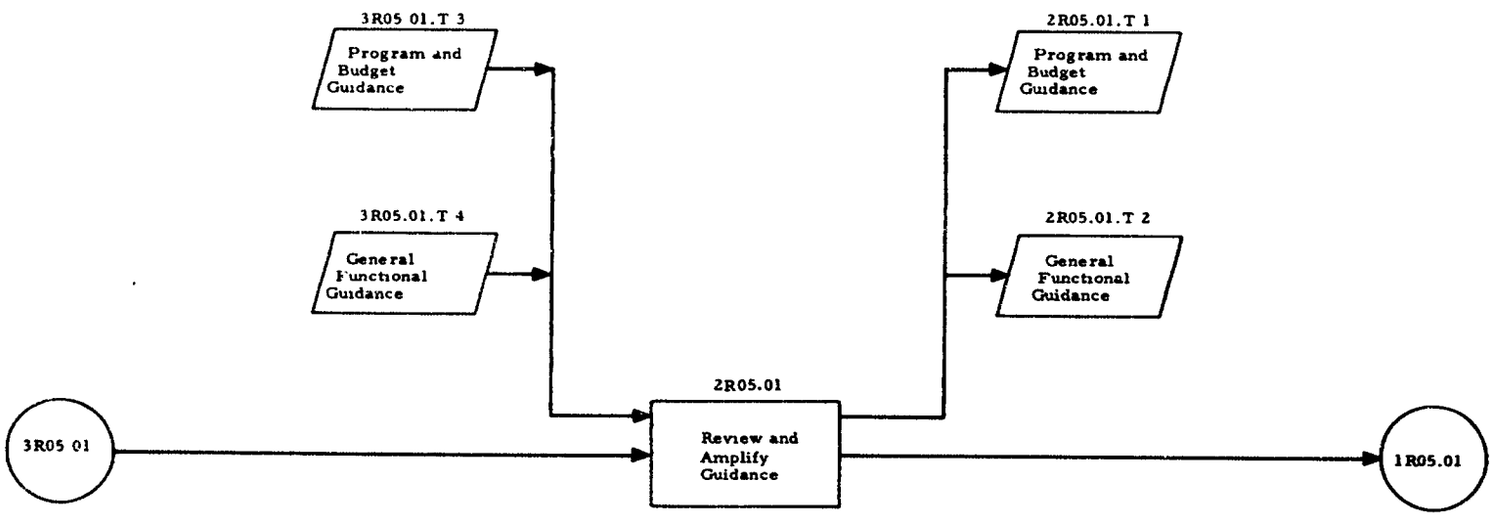

RPMA REVIEW FUNCTION
(MSC PREPARATION OF THE PYPR)

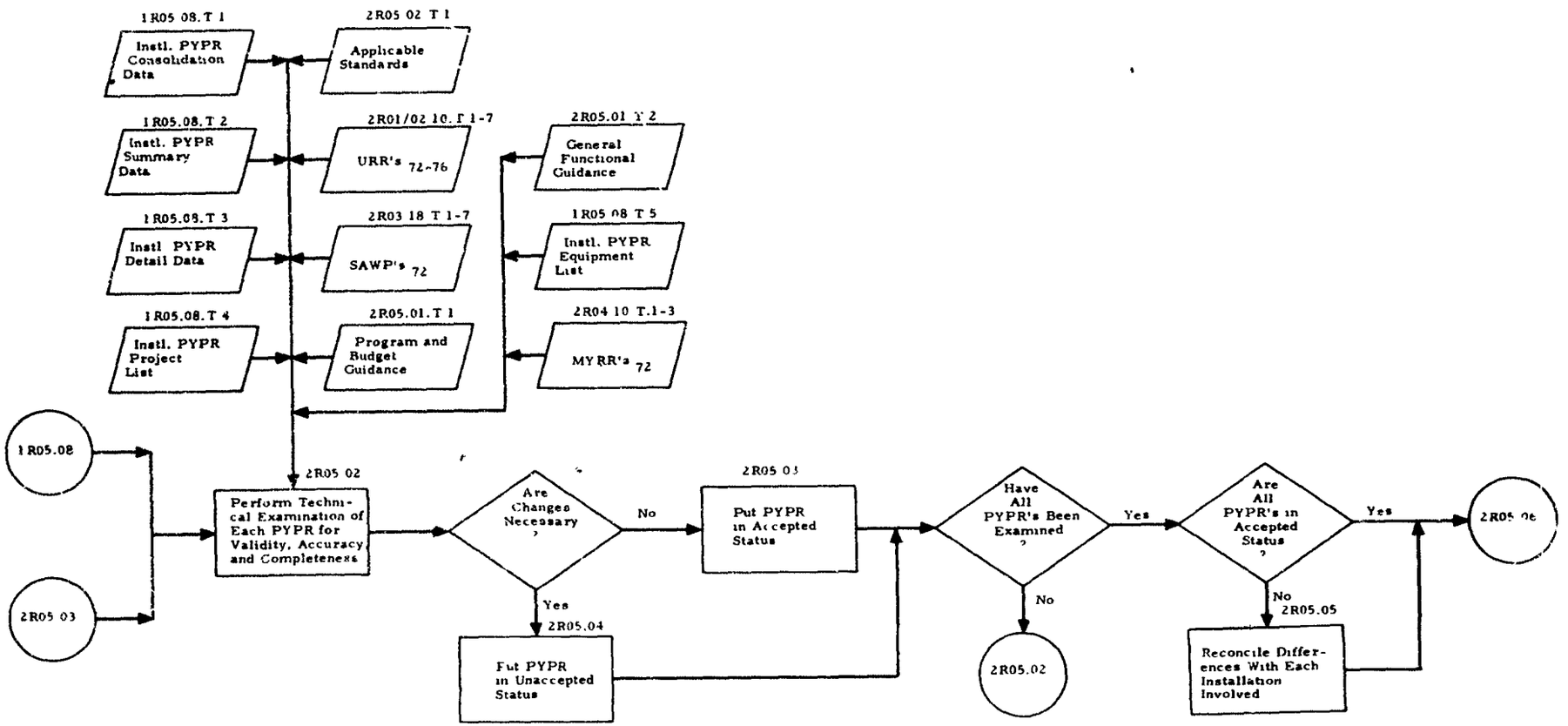

RPMA REVIE FUNCTION
(MSC PREPARATION OF THE PYPR)

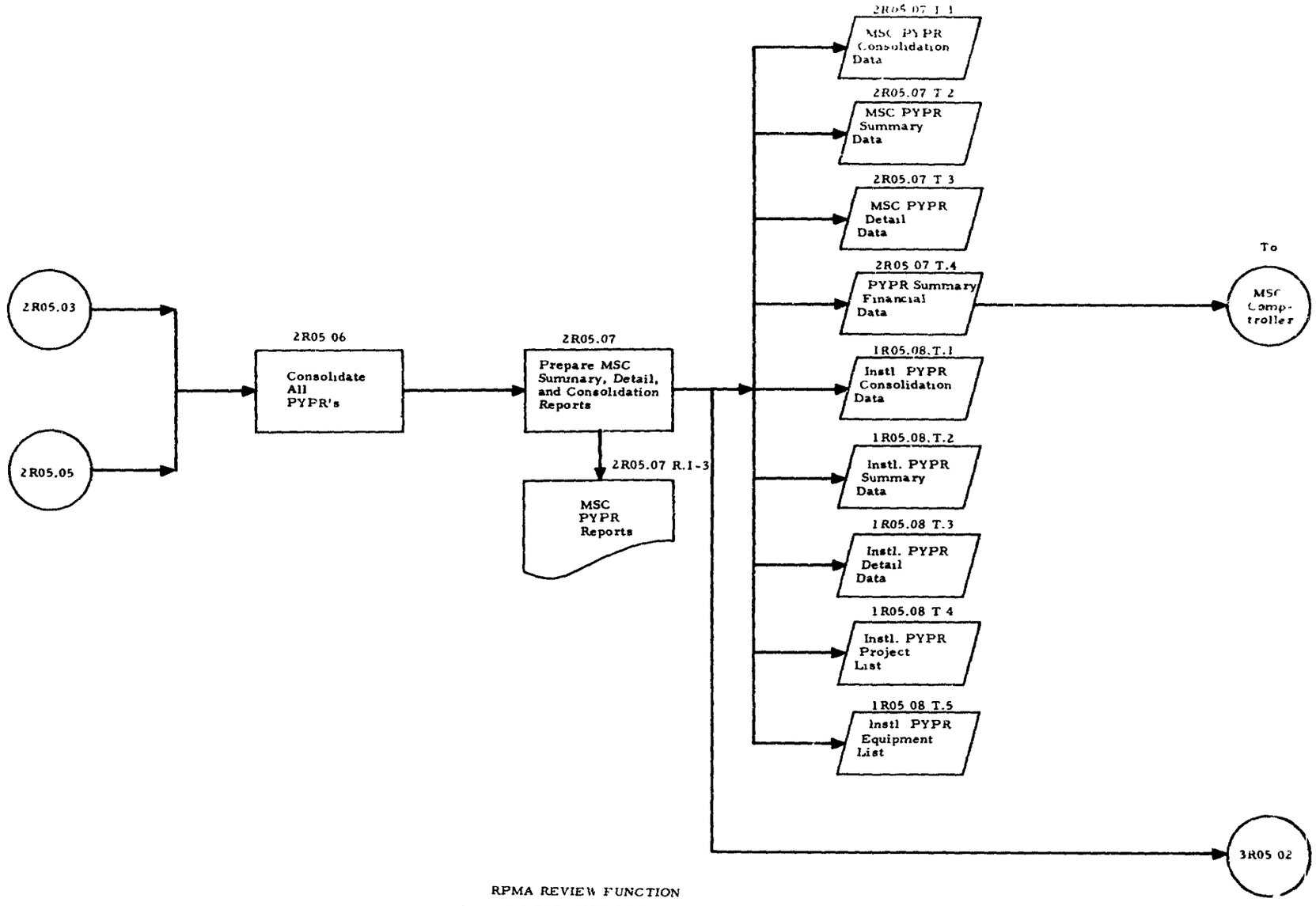

RPMA REVIEW FUNCTION
(MSC PREPARATION OF THE PYPR)

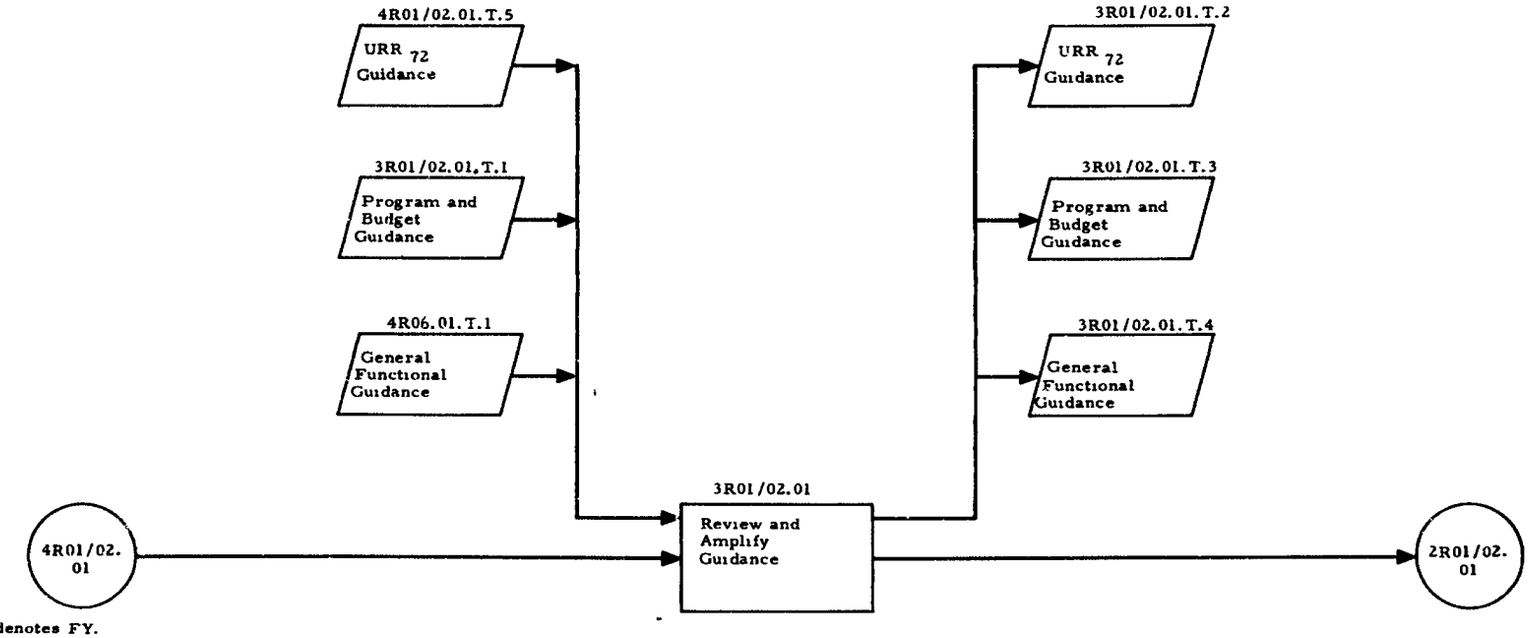

Note: Subscript denotes FY.
(Year of execution: FY72)

RPMA PLANNING AND PROGRAMMING FUNCTION
(MAFC PREPARATION OF THE URR)

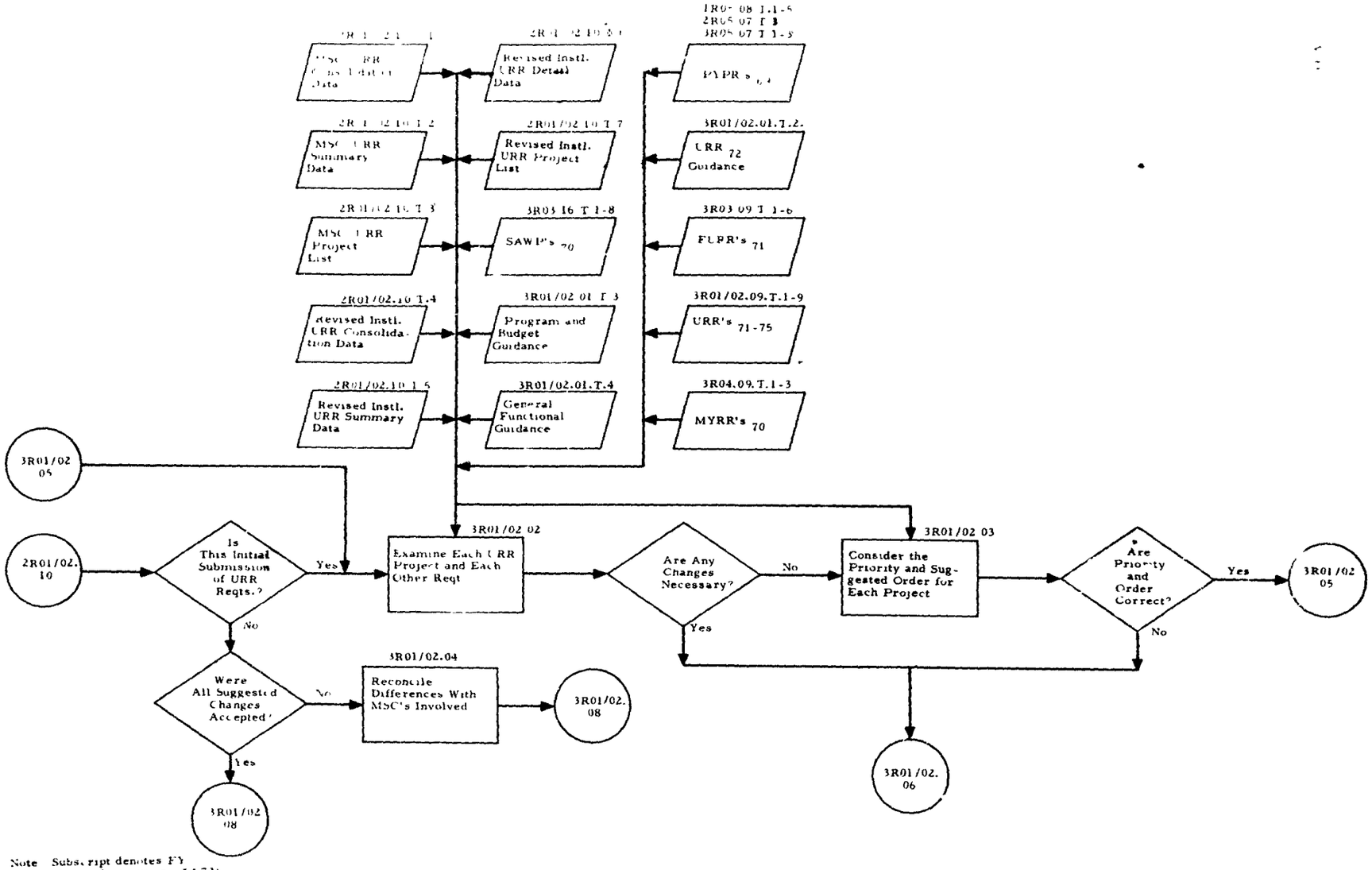

Note Subscript denotes FY (Year of execution FY72)

RPMA PLANNING AND PROGRAMMING FUNCTION
(MAFC PREPARATION OF THE URR)

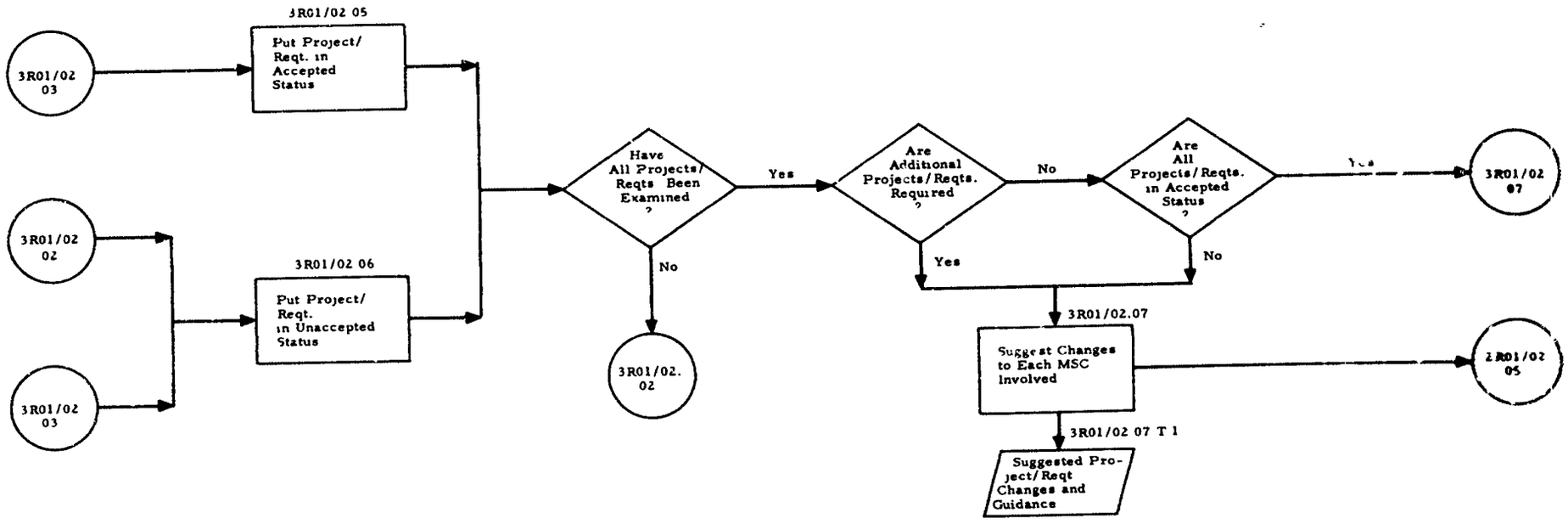

RPMA PLANNING AND PROGRAMMING FUNCTION
(MAFC PREPARATION OF THE URR)

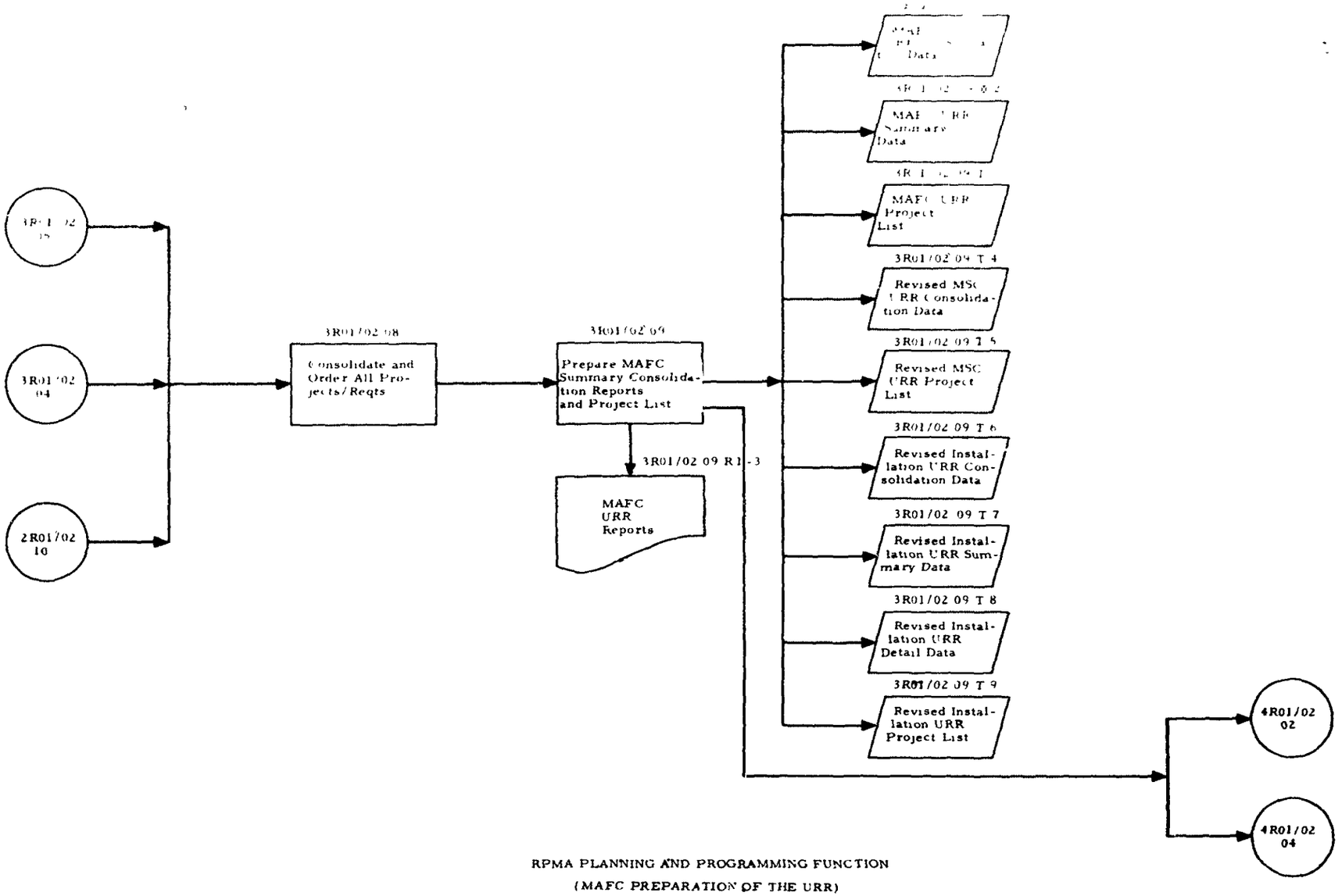

RPMA PLANNING AND PROGRAMMING FUNCTION

(MAFC PREPARATION OF THE URR)

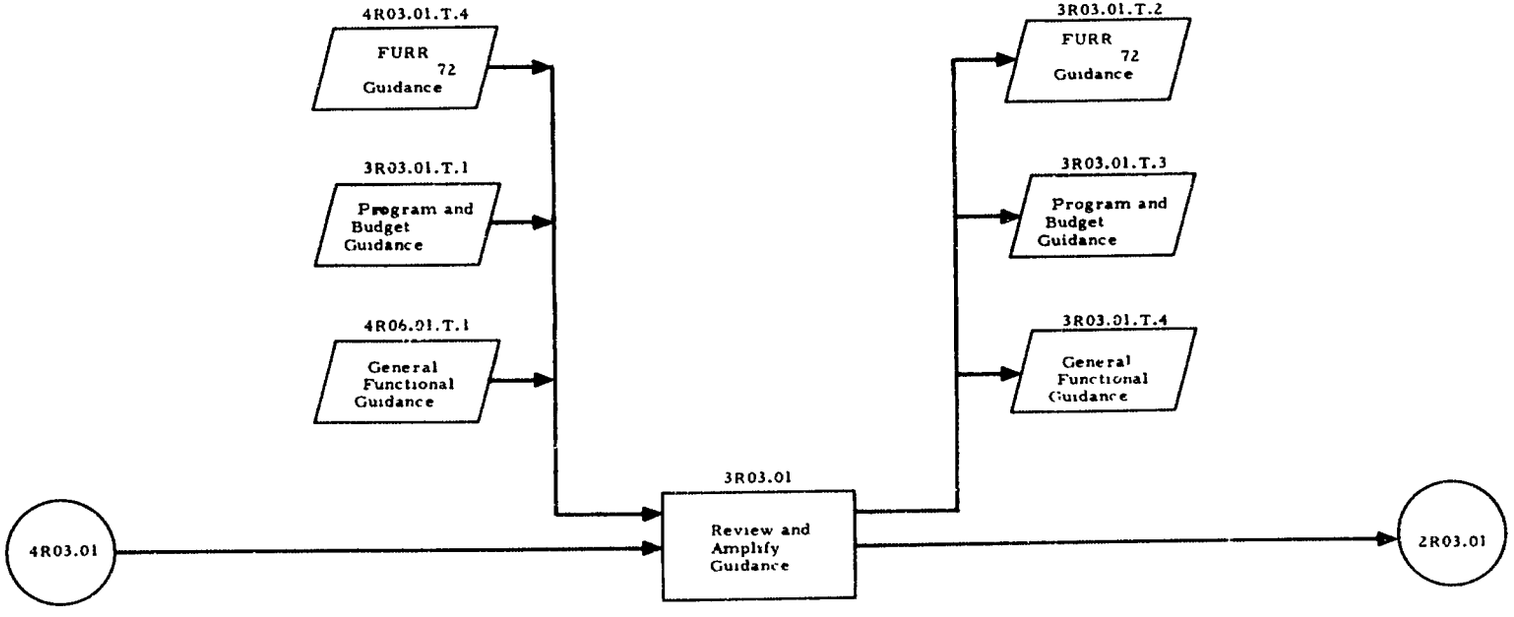

Note: Subscript denotes FY.
(Year of execution: FY72)

RPMA BUDGETING FUNCTION
(MAFC PREPARATION OF THE FURR)

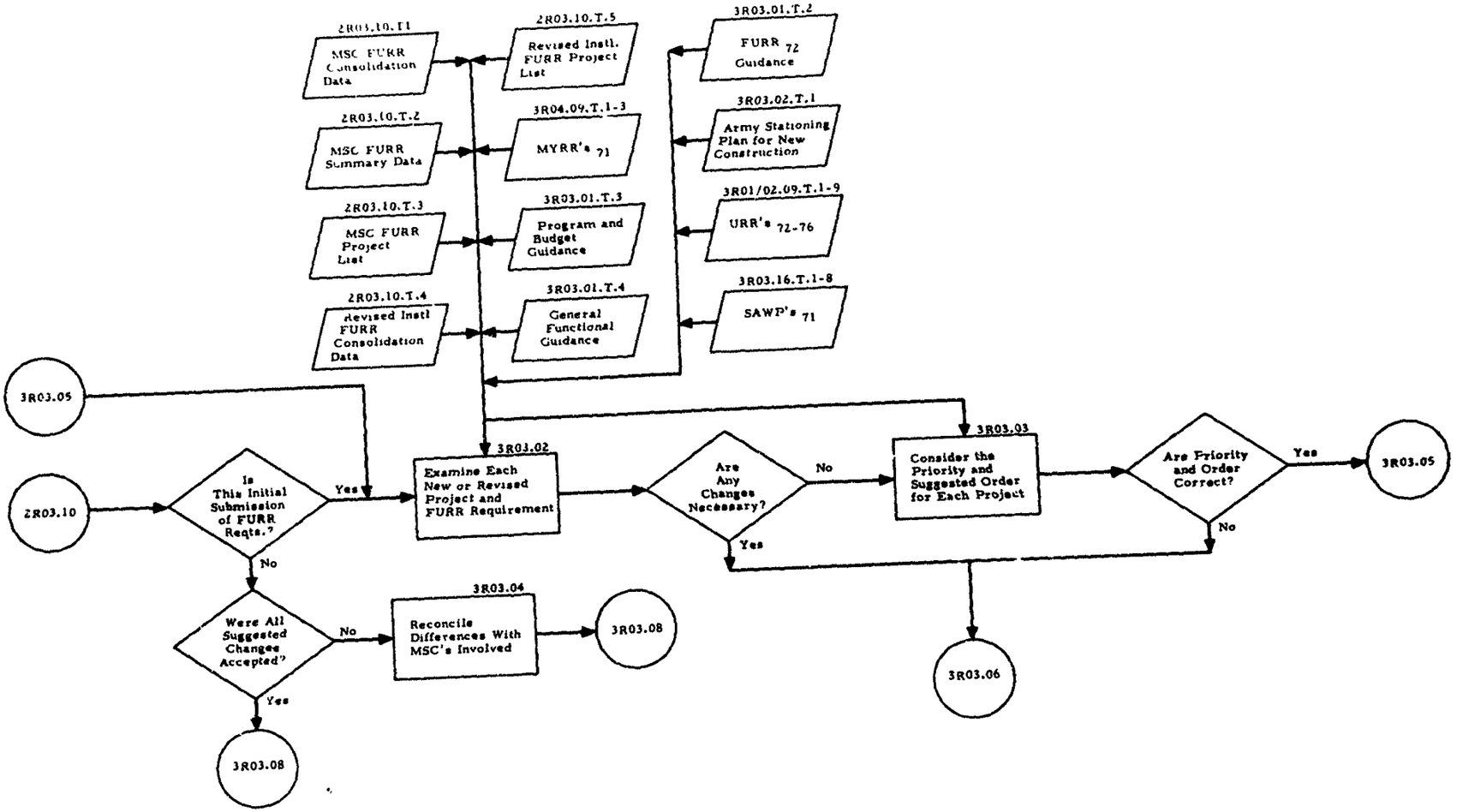

Note: Subscript denotes FY.
(Year of execution FY72)

RPMA BUDGETING FUNCTION
(MAFC PREPARATION OF THE FURR)

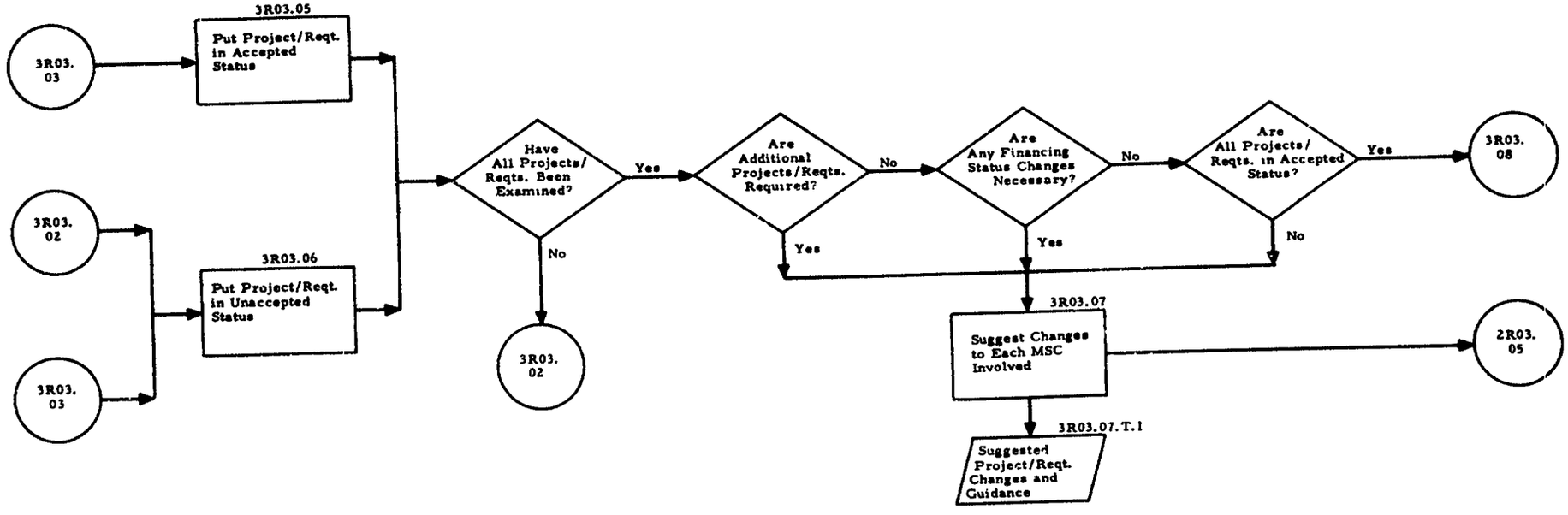

RPMA BUDGETING FUNCTION
(MAFC PREPARATION OF THE FURR)

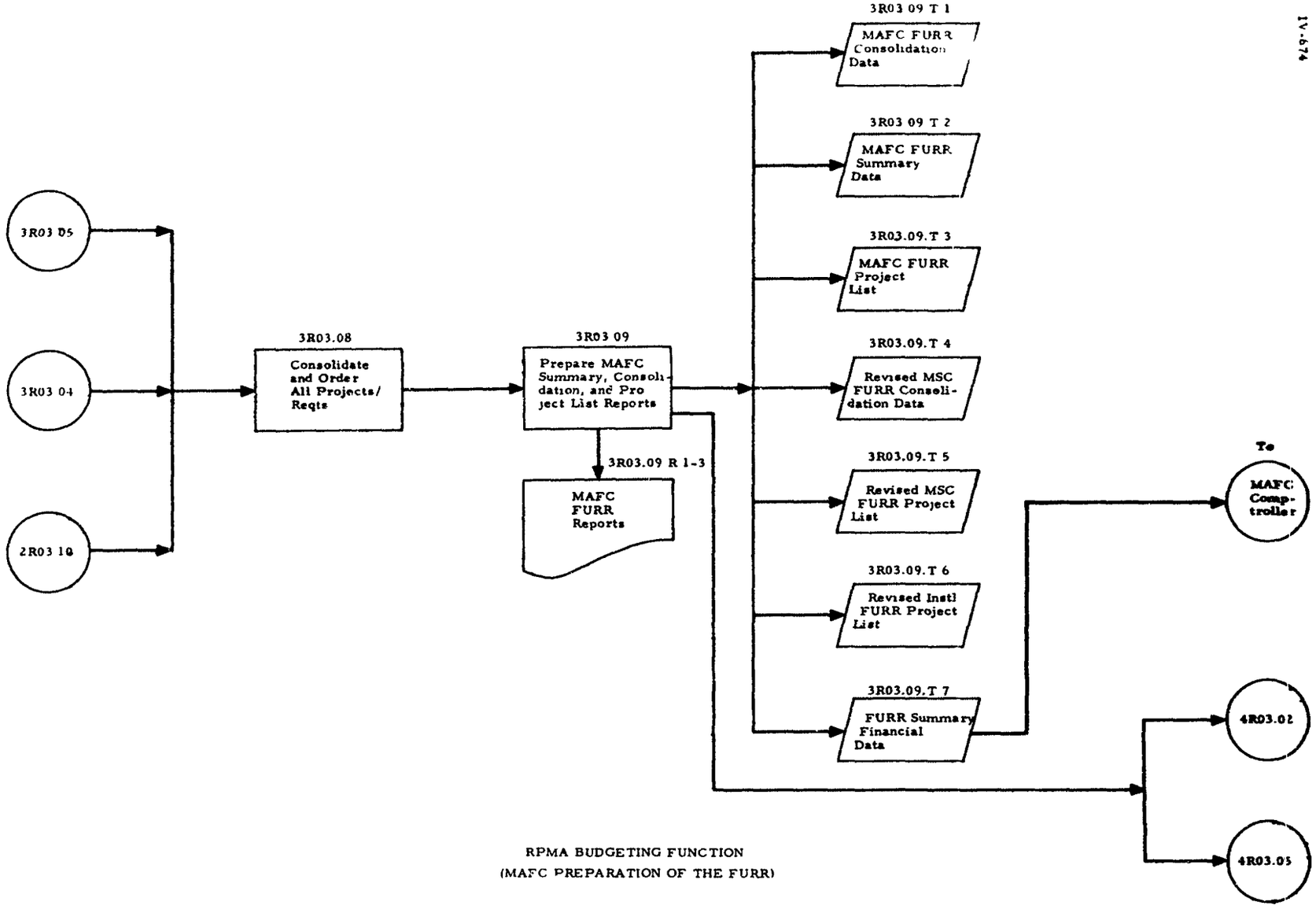

RPMA BUDGETING FUNCTION
(MAFC PREPARATION OF THE FURR)

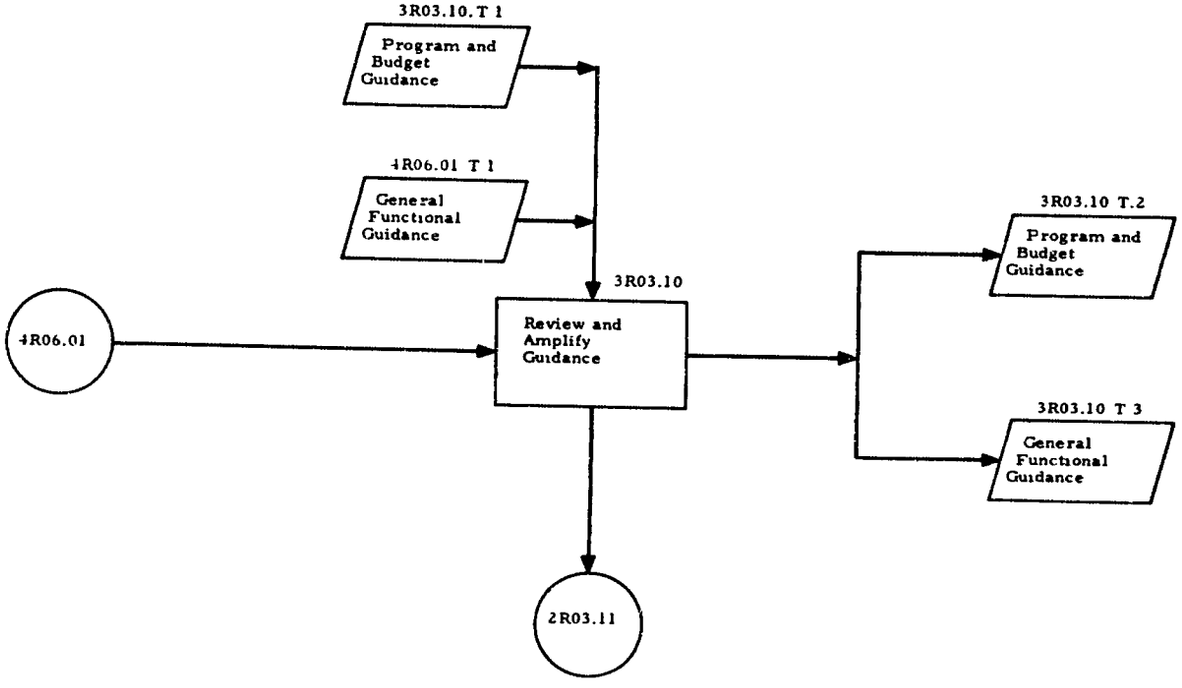

RPMA BUDGETING FUNCTION
(MAFC PREPARATION OF THE SAWP)

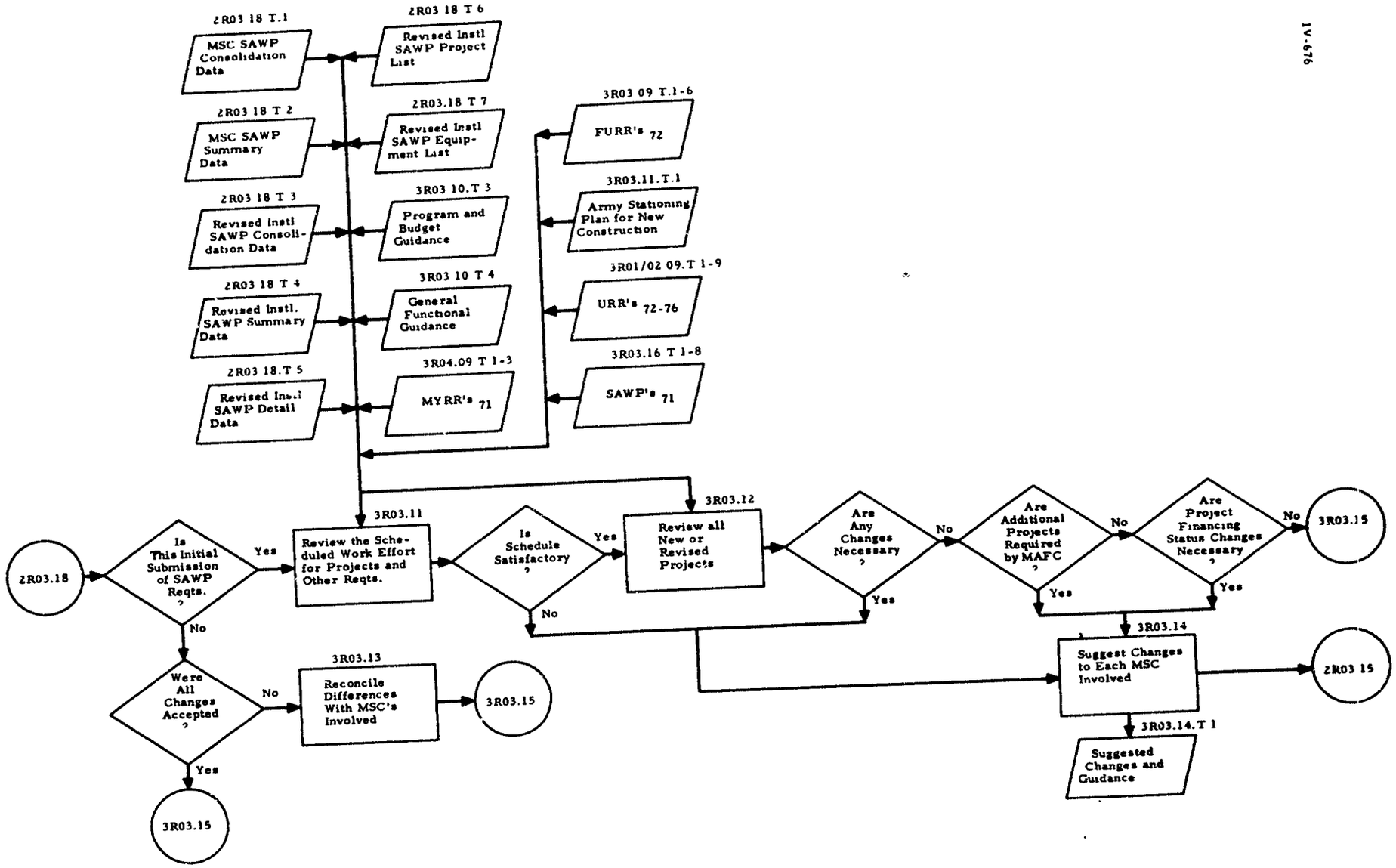

Note: Subscript denotes FY.
(Year of execution: FY72)

RPMA BUDGETING FUNCTION
(MAFC PREPARATION OF THE SAWP)

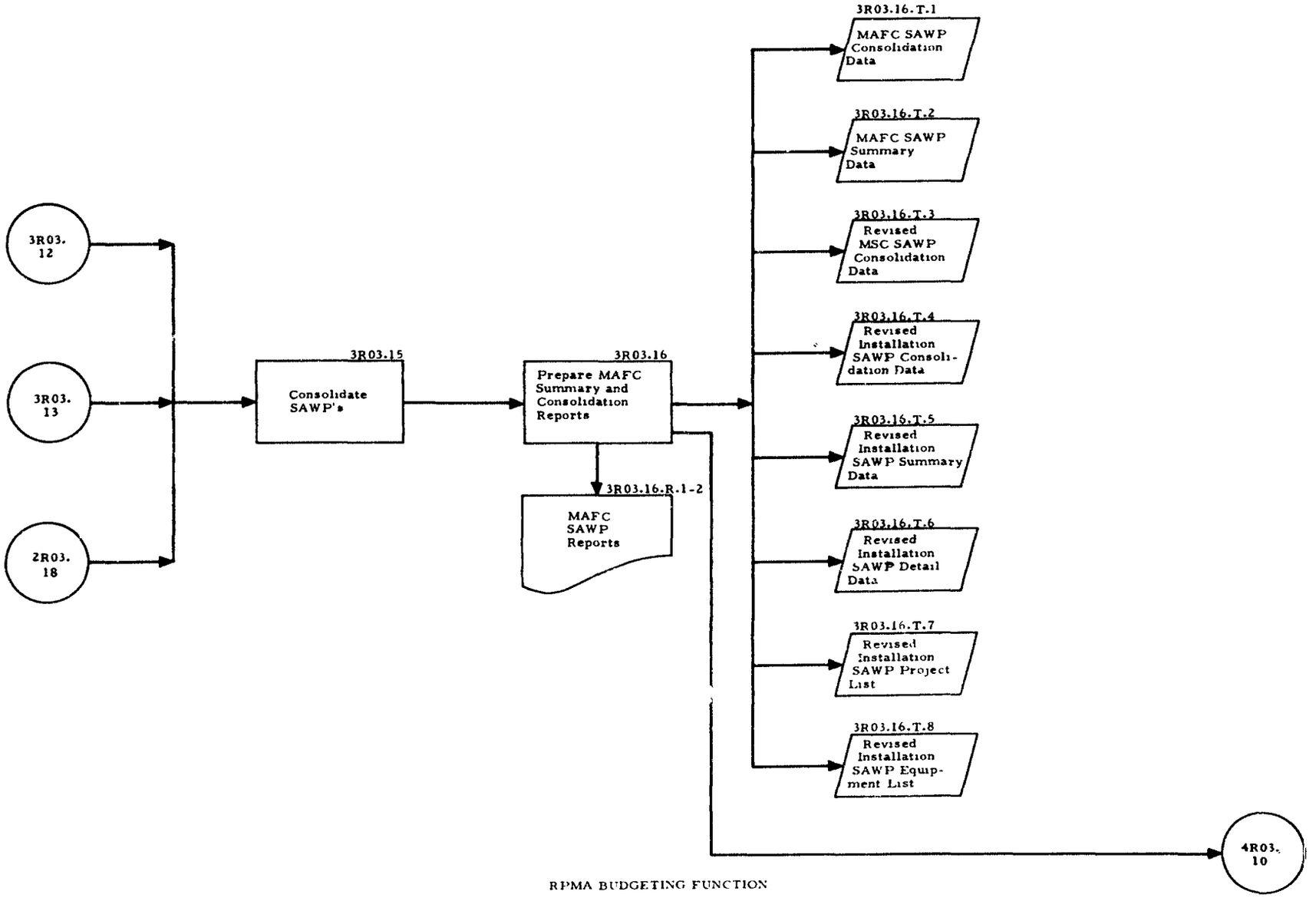

RPMA BUDGETING FUNCTION
(MAFC PREPARATION OF THE SAWP)

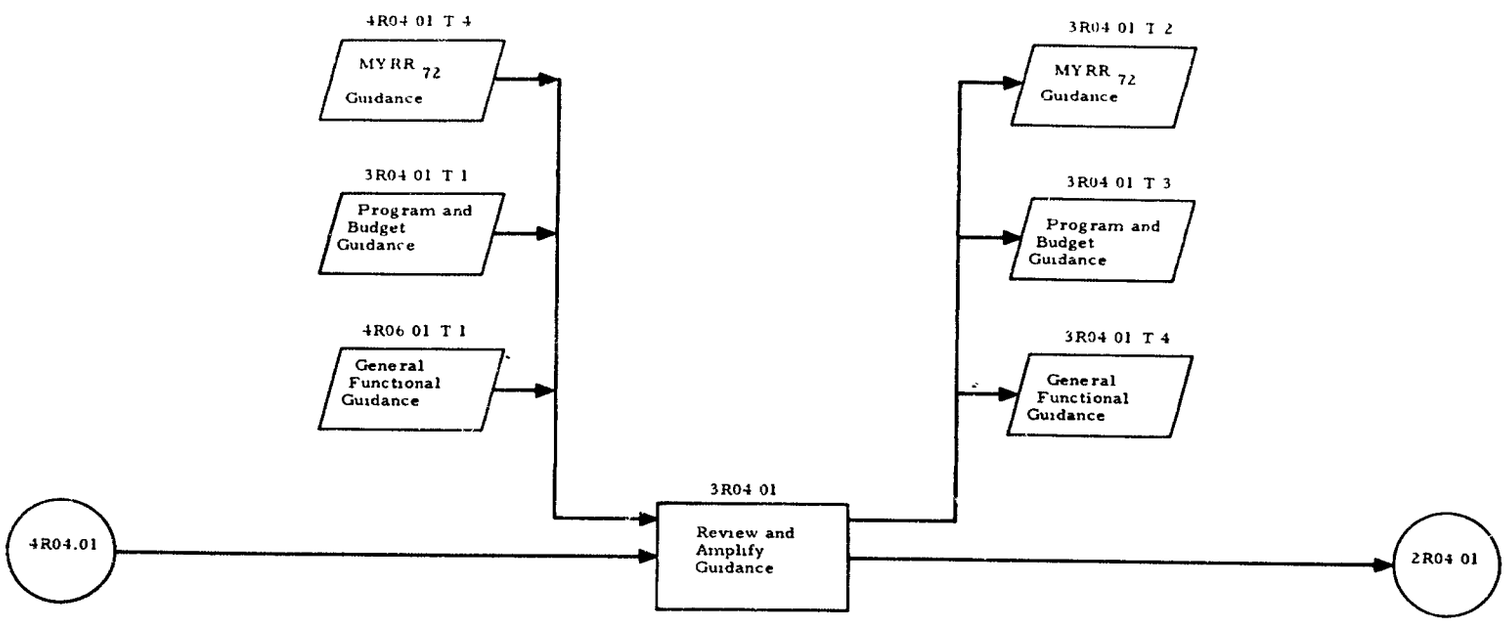

Note: Subscript denotes FY
(Year of execution. FY72)

RPMA EXECUTION FUNCTION
(MAFC PREPARATION OF THE MYRR)

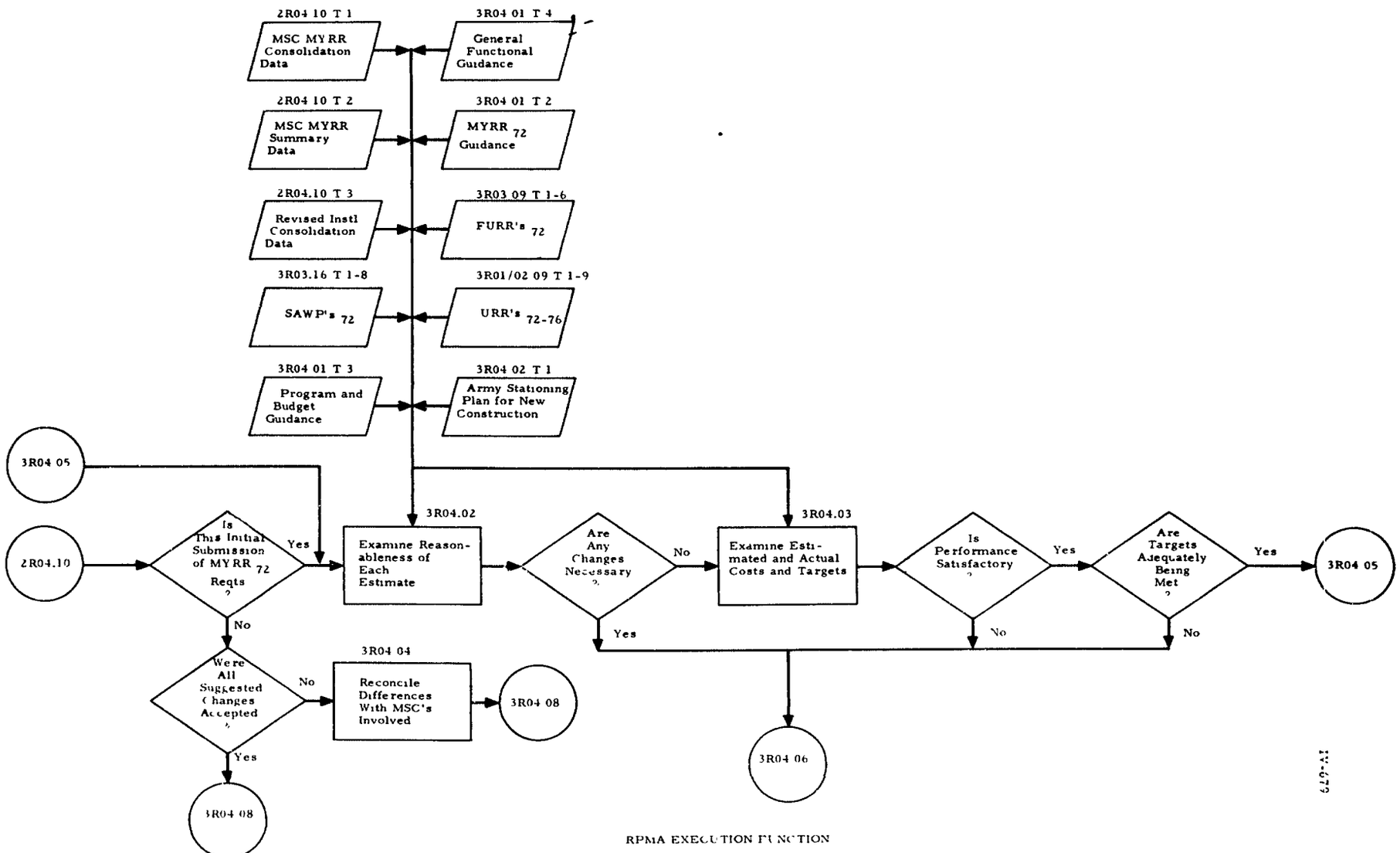

Note Subscript denotes FY (Year of execution FY72)

RPMA EXECUTION FUNCTION
(MAFC PREPARATION OF THE MYRR)

IV-679

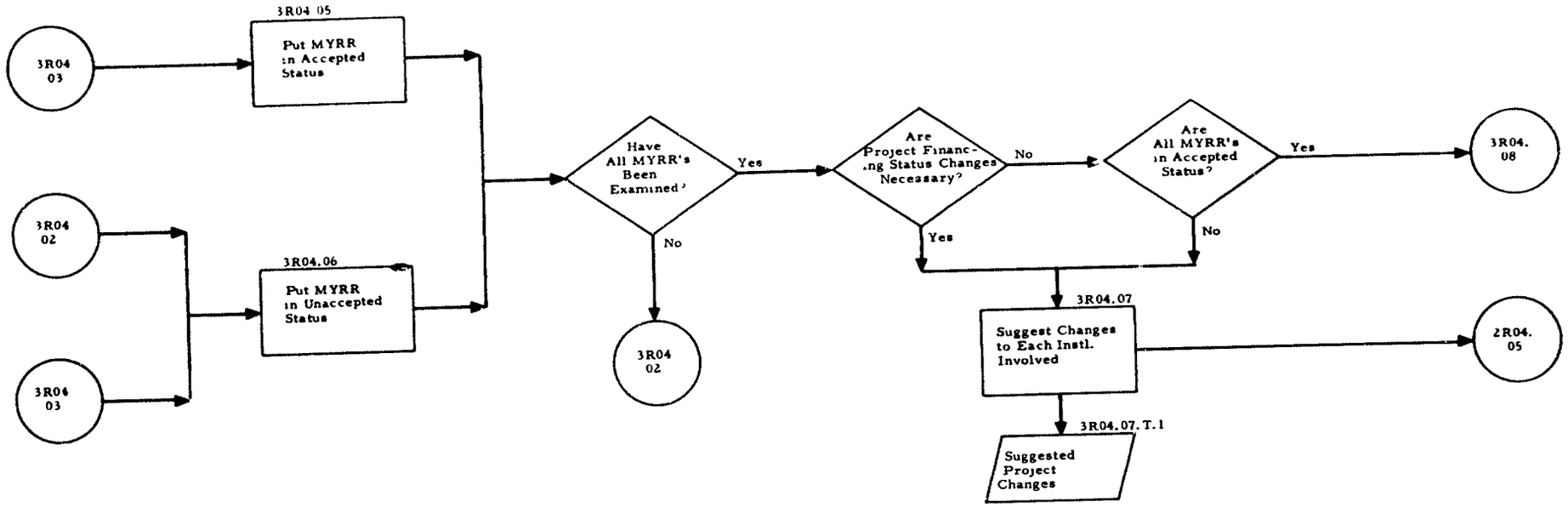

RPMA EXECUTION FUNCTION
(MAFC PREPARATION OF THE MYRR)

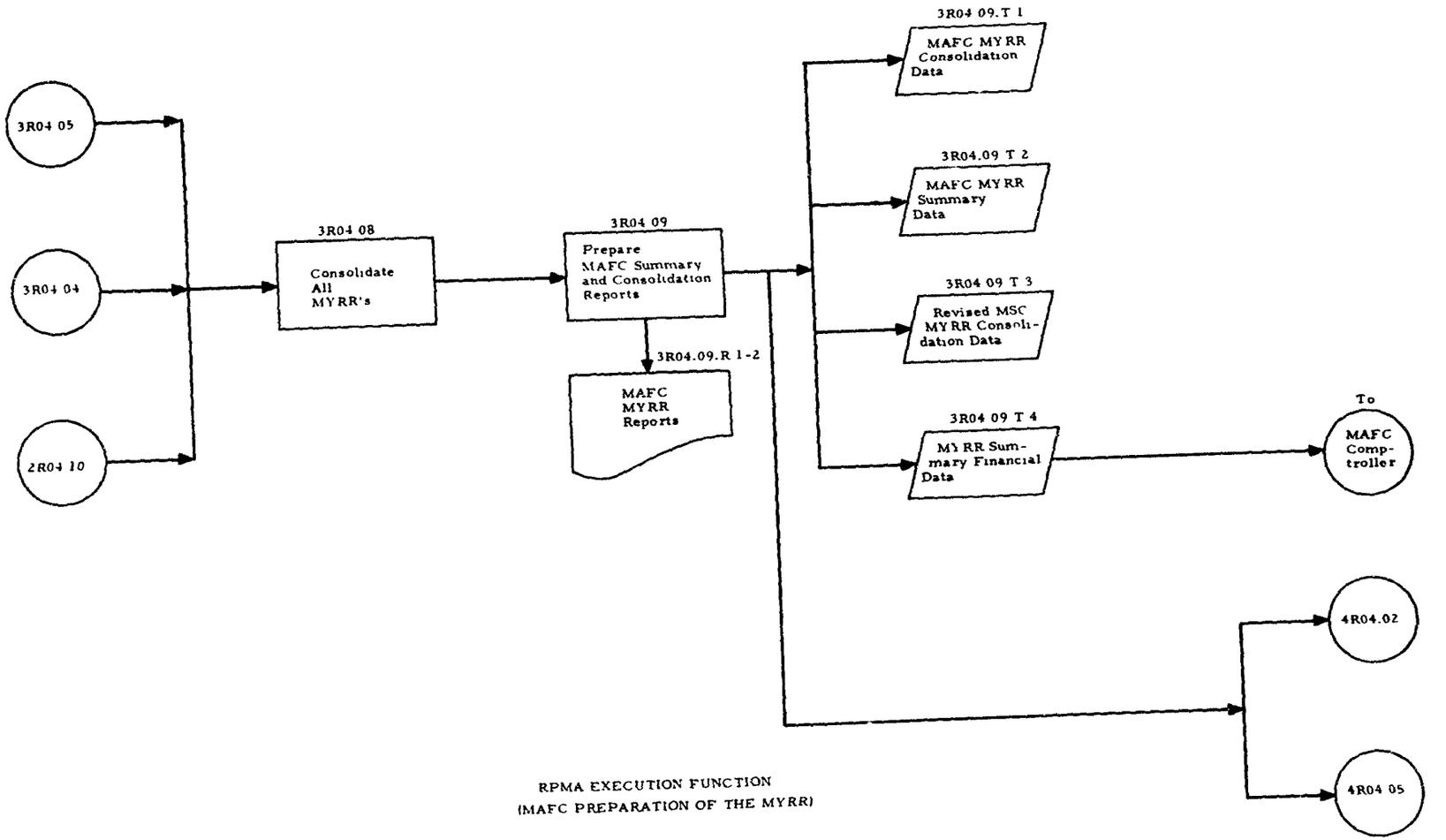

RPMA EXECUTION FUNCTION
(MAFC PREPARATION OF THE MYRR)

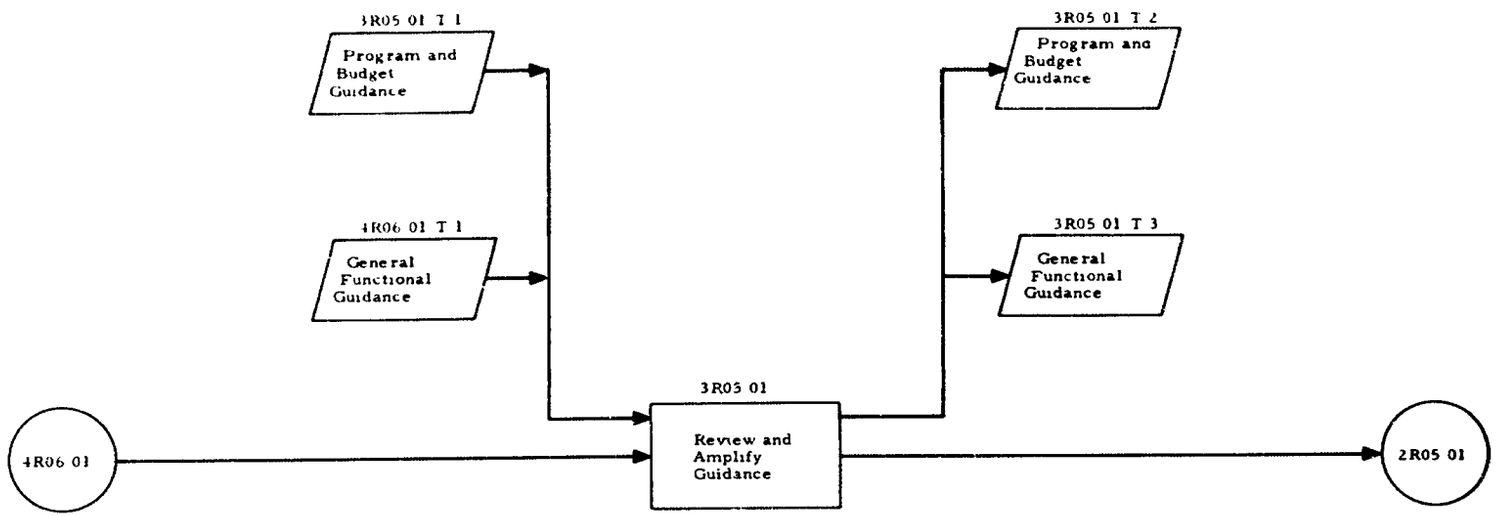

RPMA REVIEW FUNCTION
(MAFC PREPARATION OF THE PYPR)

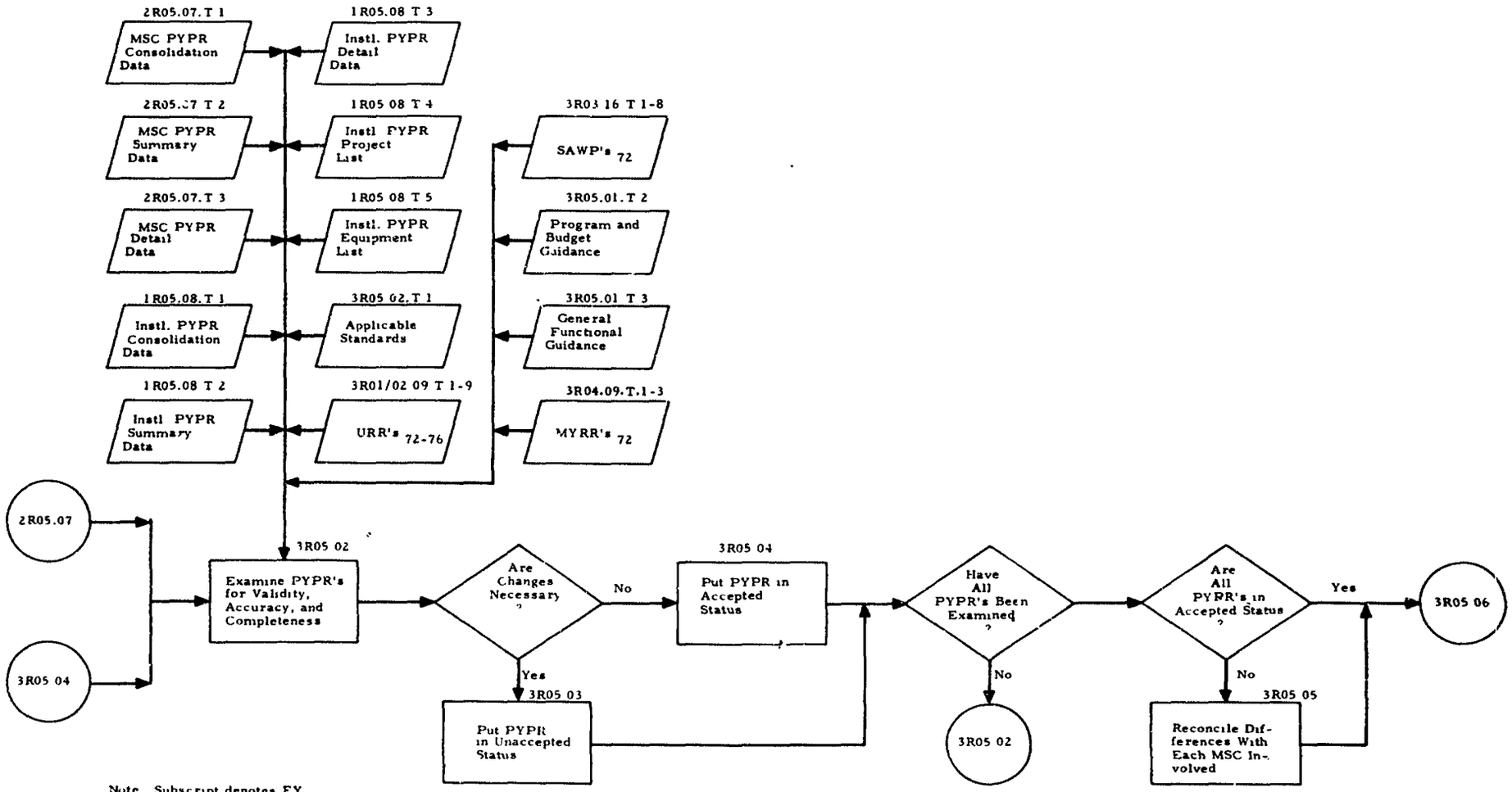

Note Subscript denotes FY.
(Year of execution FY 72)

IV-683

RPMA REVIEW FUNCTION
(MAFC PREPARATION OF THE PYPR)

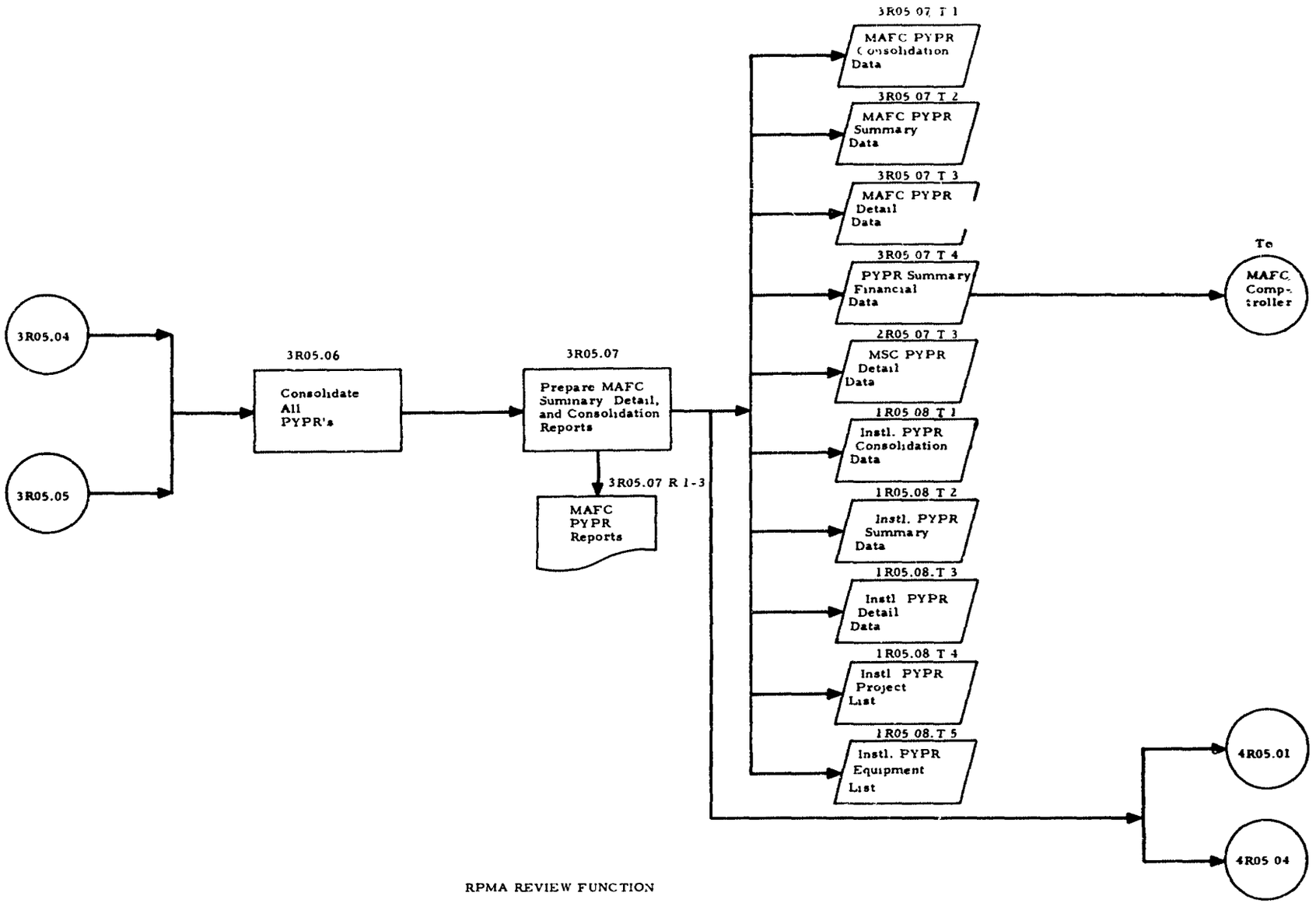

RPMA REVIEW FUNCTION
(MAFC PREPARATION OF THE PYPR)

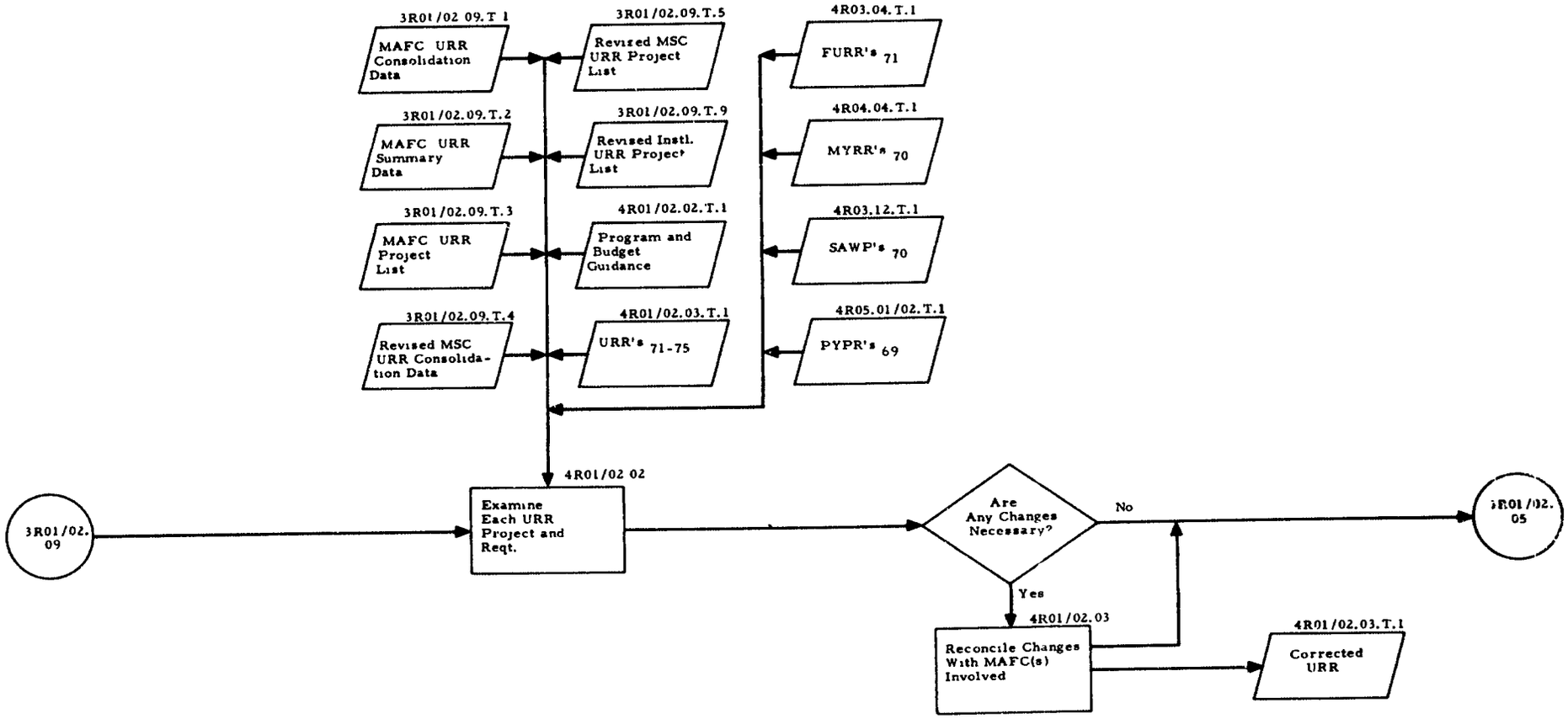

Note: Subscript (e.g., URR $_{71}$) denotes FY
(Year of execution: FY72)

IV-685

RPMA PLANNING AND PROGRAMMING FUNCTION
(OCE PROCESSING OF THE URR)

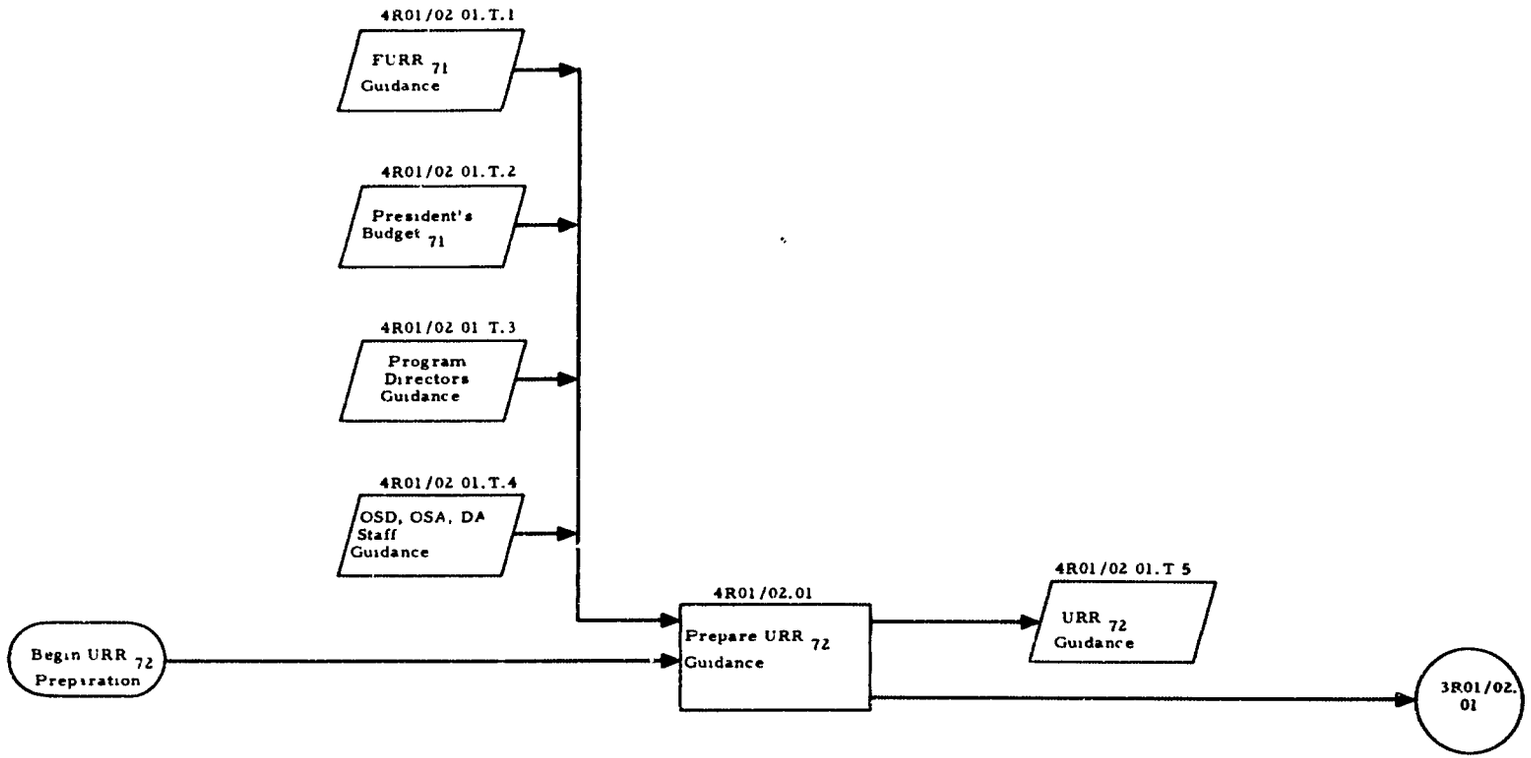

RFMA PLANNING (FY73) AND PROGRAMMING (FY72) FUNCTION
(RPMAO PROCESSING OF THE URR)

Note: Subscript (e.g., URR $_{71}$) denotes FY.
(Year of execution: FY72)

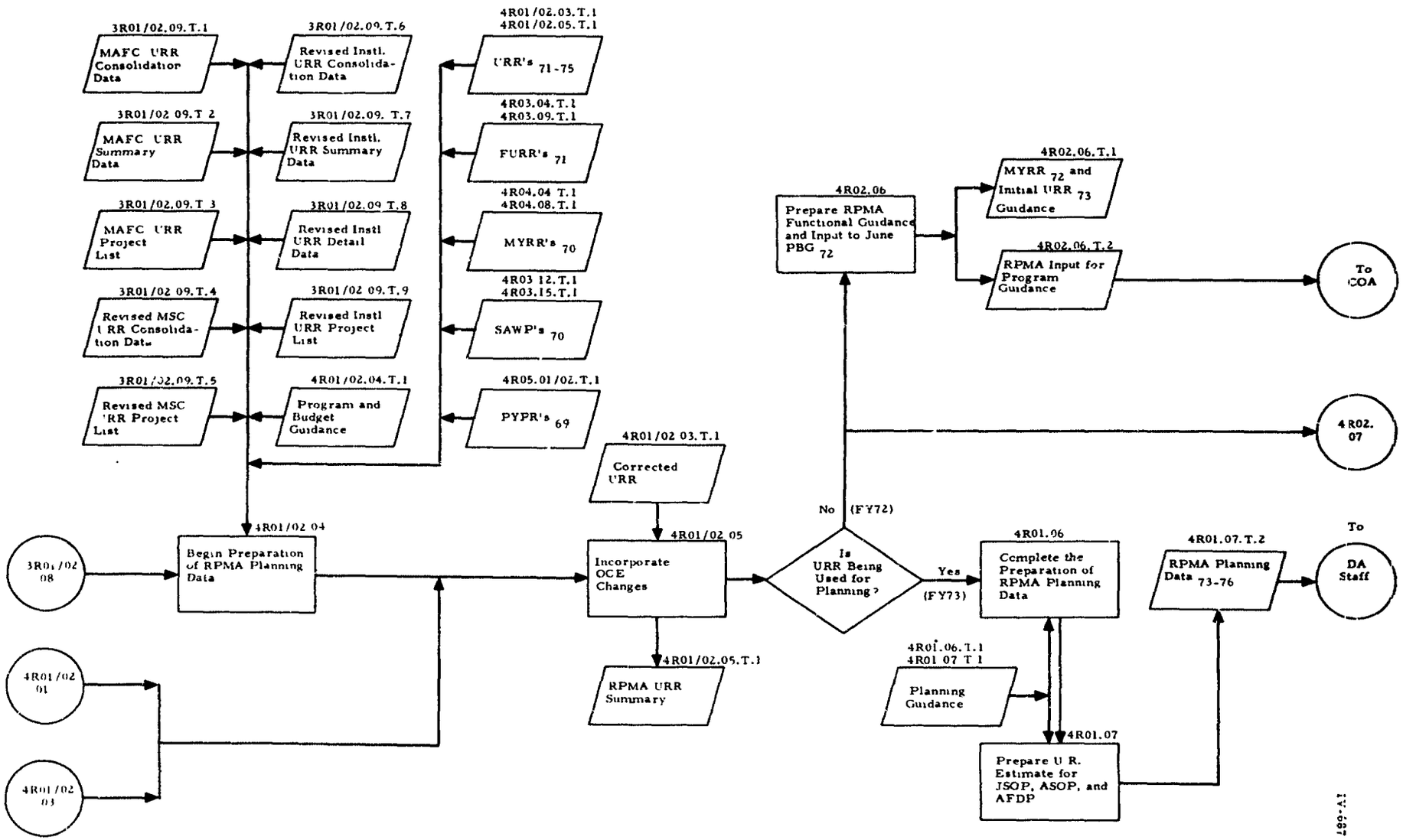

Note: Subscript (e.g., URR 71) denotes FY (Year of execution: FY72)

RPMA PLANNING (FY73) AND PROGRAMMING (FY72) FUNCTION
(RPMAO PROCESSING OF THE URR)

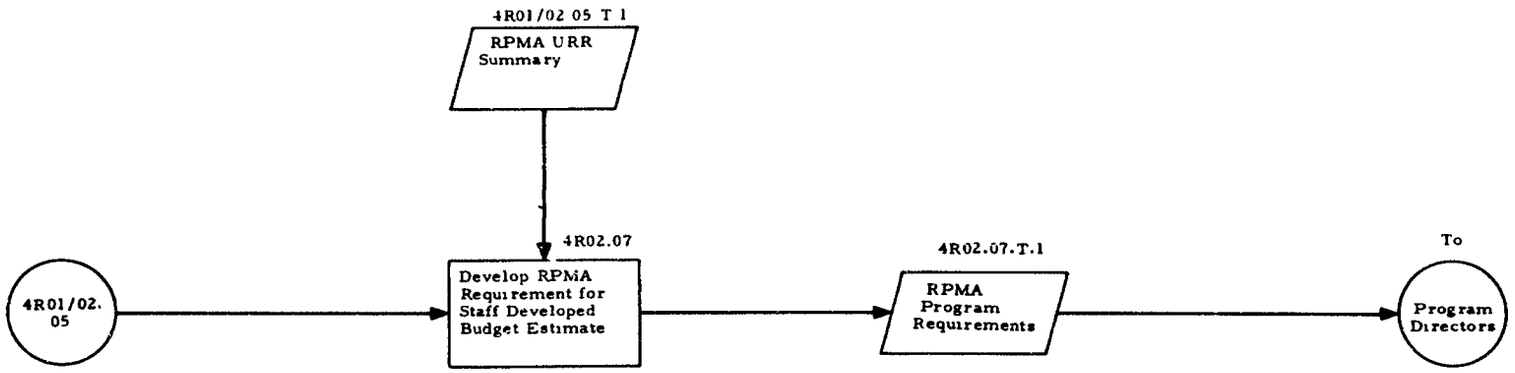

RPMA PROGRAMMING FUNCTION
(DA STAFF USE OF URR DATA)

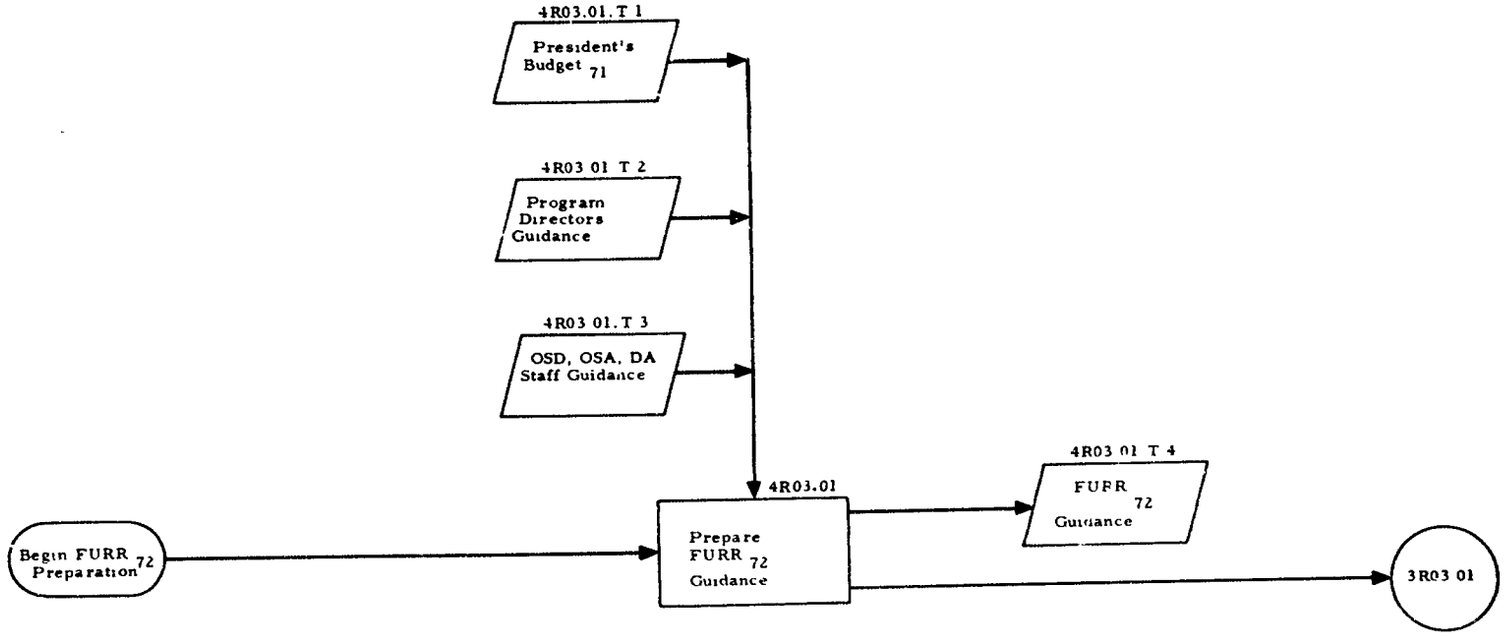

Note: Subscript (e g , URR_{71}) denotes FY (Year of execution: FY72)

RPMA BUDGETING FUCTION
(RPMAO PROCESSING OF THE FURR)

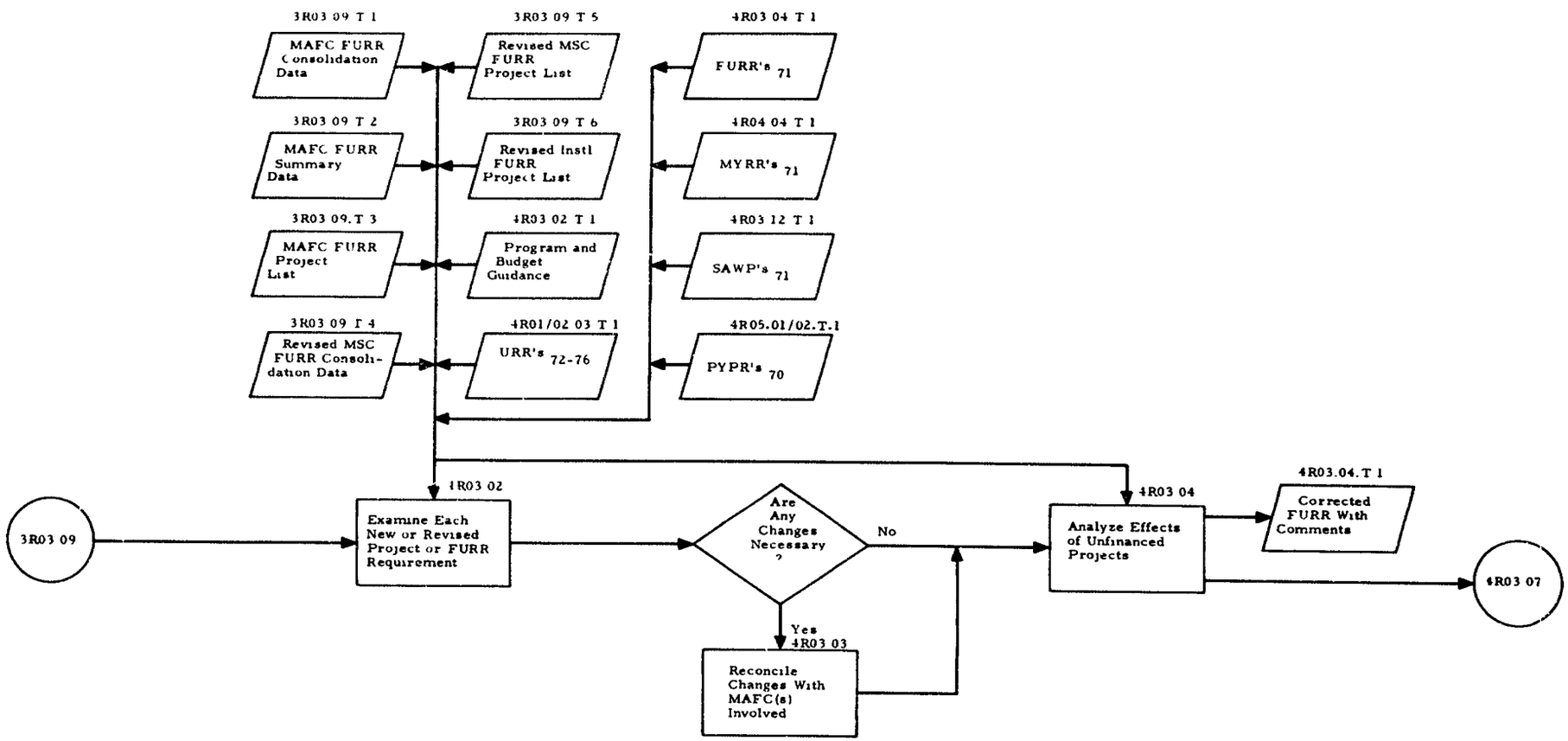

Note Subscript (e g , URR_{71}) denotes FY (Year of execution: FY72)

RPMA BUDGETING FUNCTION
(OCE PROCESSING OF THE FURR)

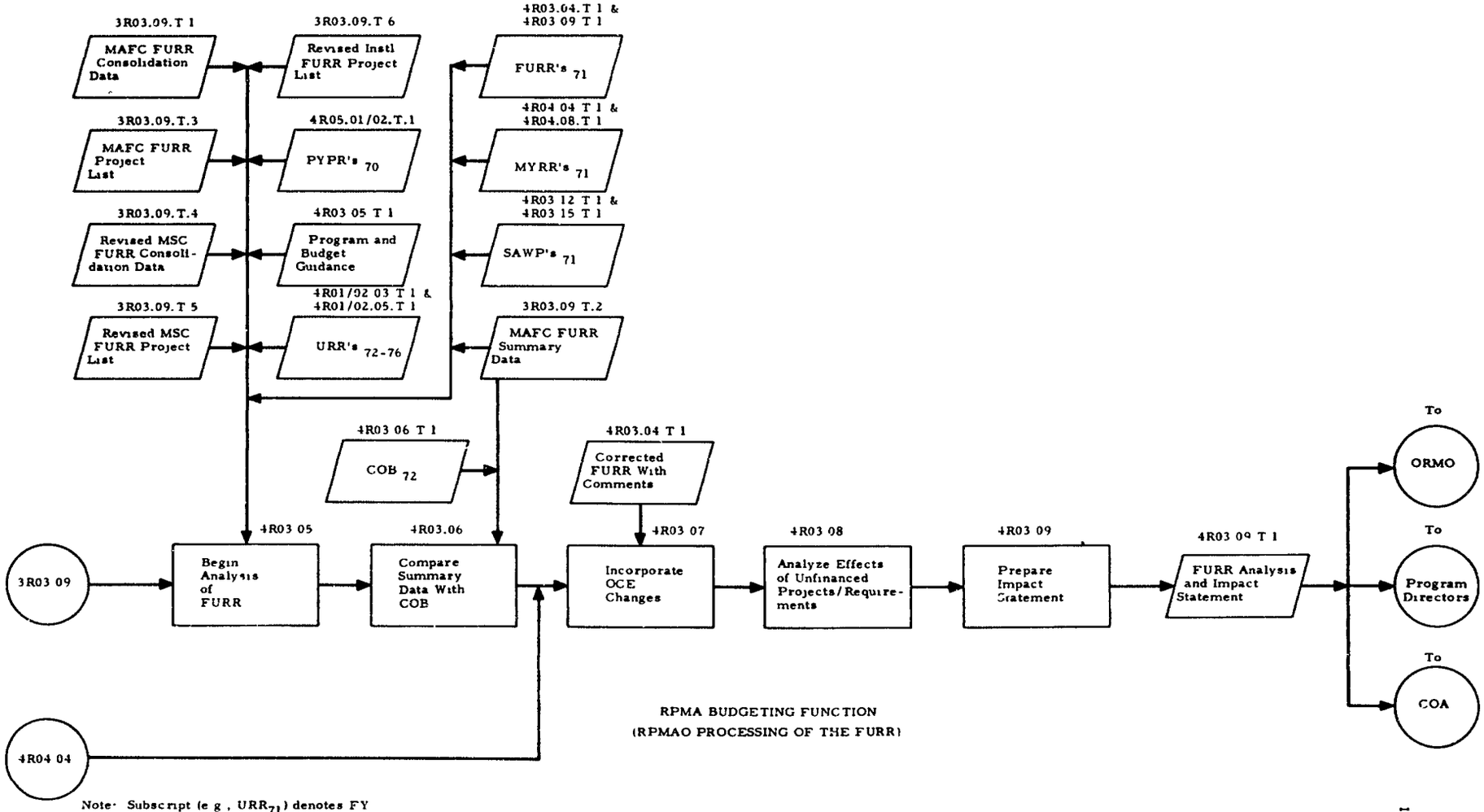

RPMA BUDGETING FUNCTION
(RPMAO PROCESSING OF THE FURR)

Note: Subscript (e g , URR_{71}) denotes FY
(Year of execution: FY72)

IV-691

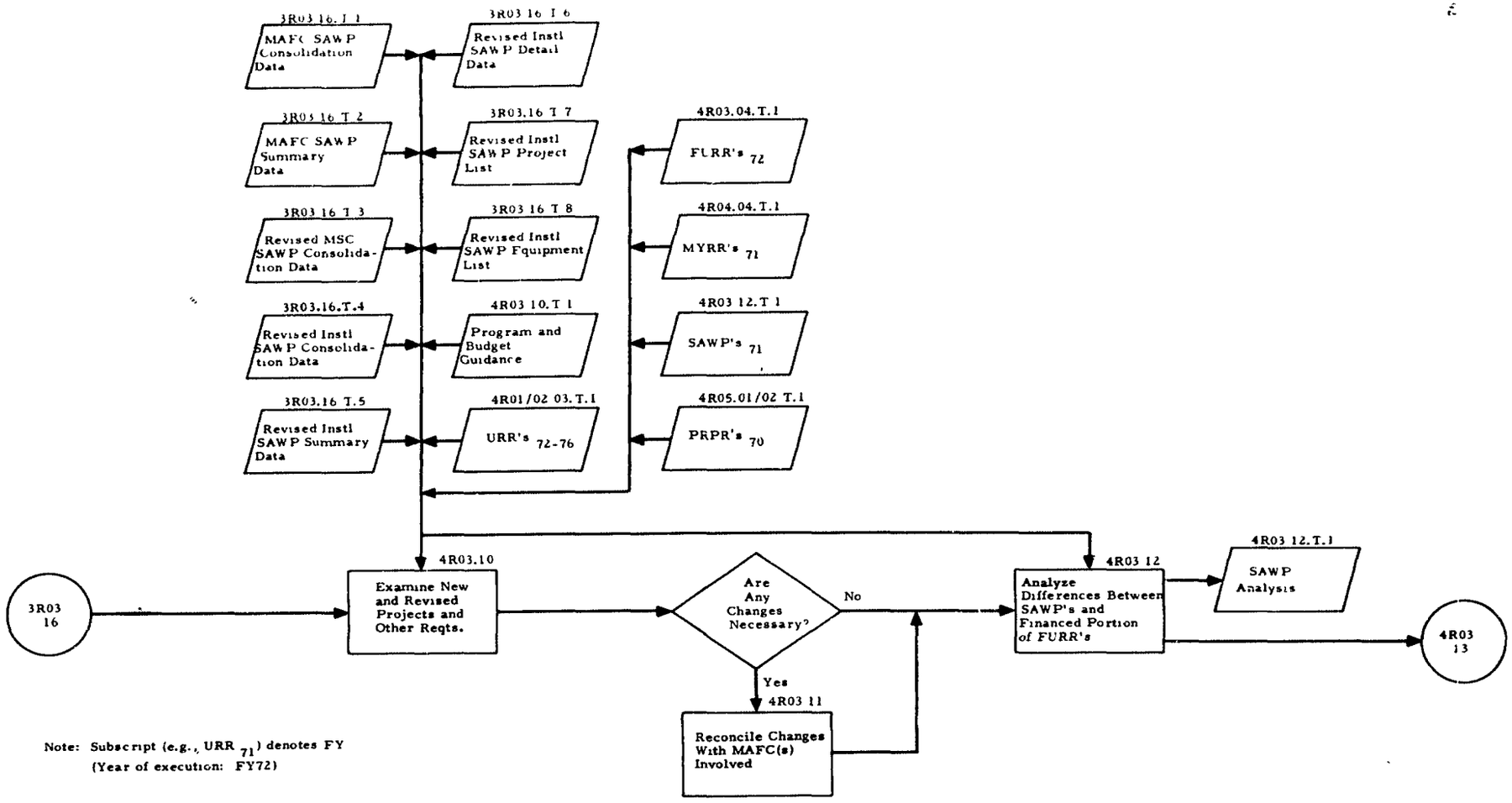

Note: Subscript (e.g., URR $_{71}$) denotes FY (Year of execution: FY72)

RPMA BUDGETING FUNCTION
(OCE PROCESSING OF THE SAWP)

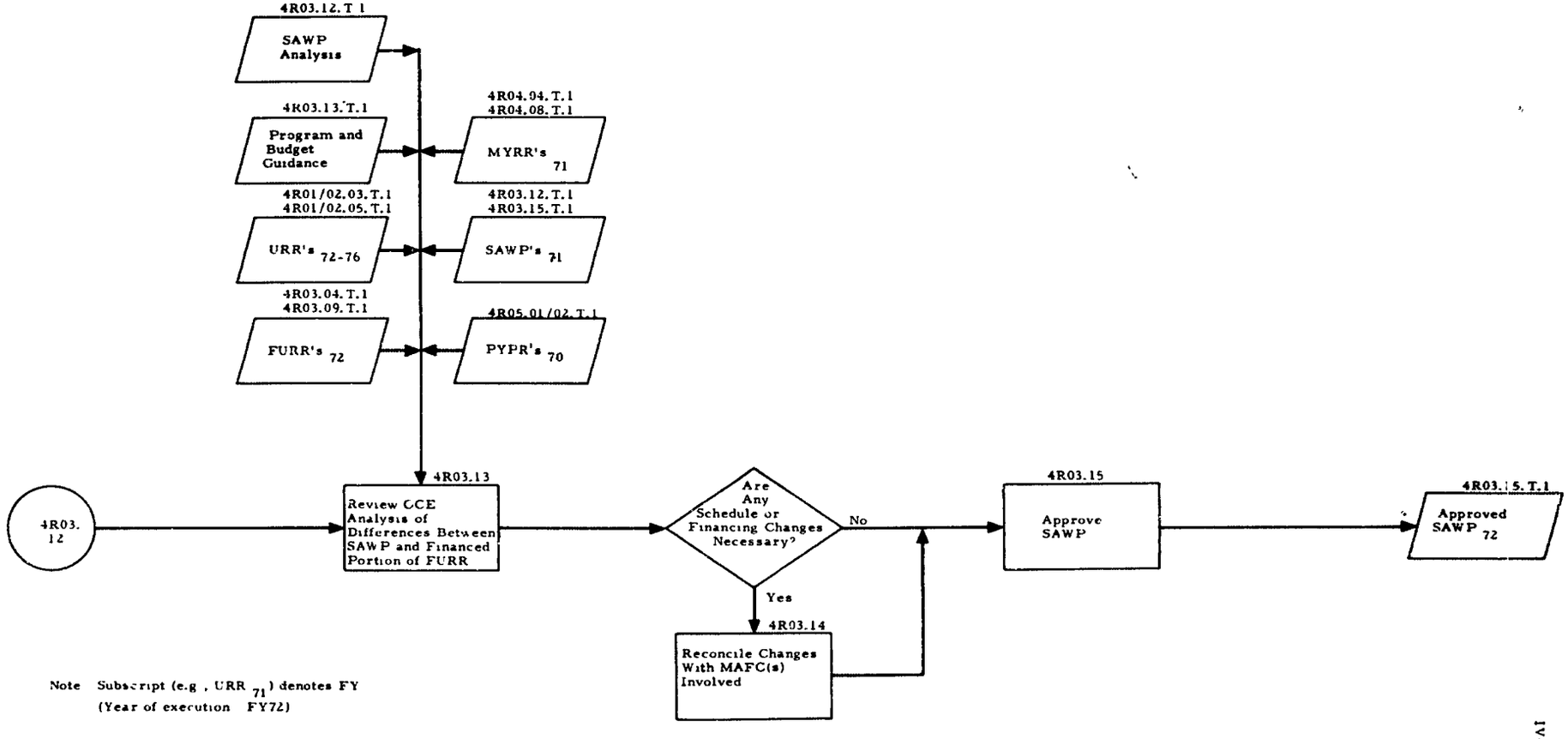

Note Subscript (e.g , URR $_{71}$) denotes FY
(Year of execution FY72)

RPMA BUDGETING FUNCTION
(RPMAO PROCESSING OF THE SAWP)

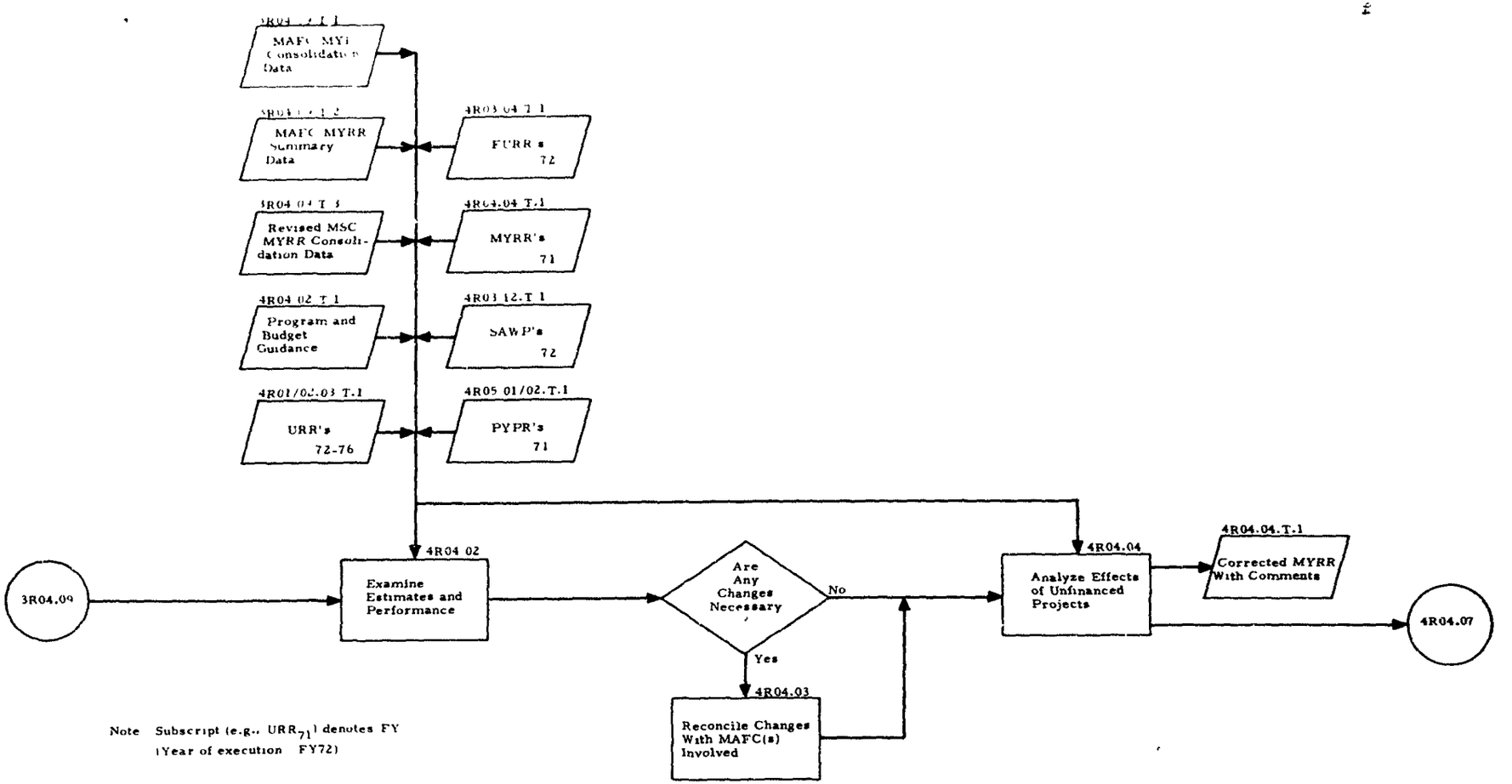

Note Subscript (e.g., URR_{71}) denotes FY (Year of execution FY72)

RPMA EXECUTION FUNCTION
(OCE PROCESSING OF THE MYRR)

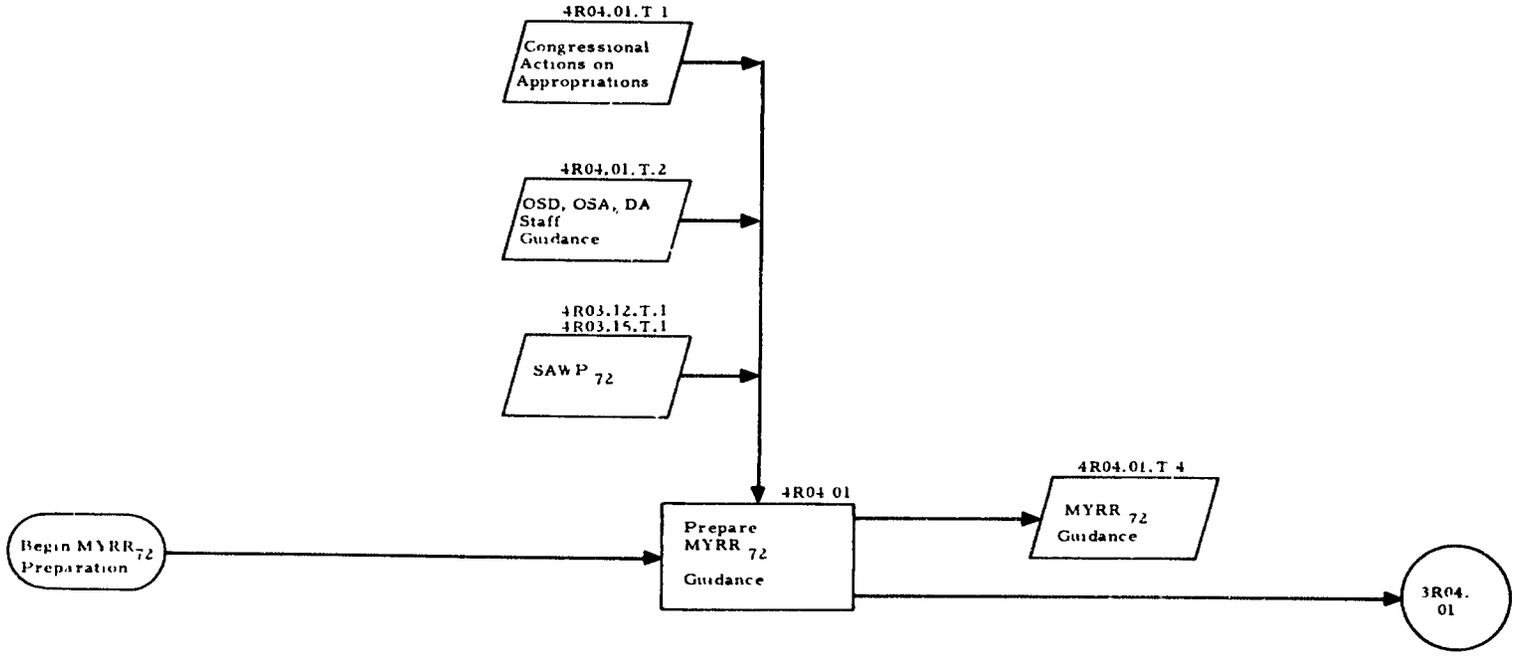

Note: Subscript (e.g., MYRR 71) denotes FY (Year of execution - FY72)

RPMA EXECUTION FUNCTION
(RPMAO PROCESSING OF THE MYRR)

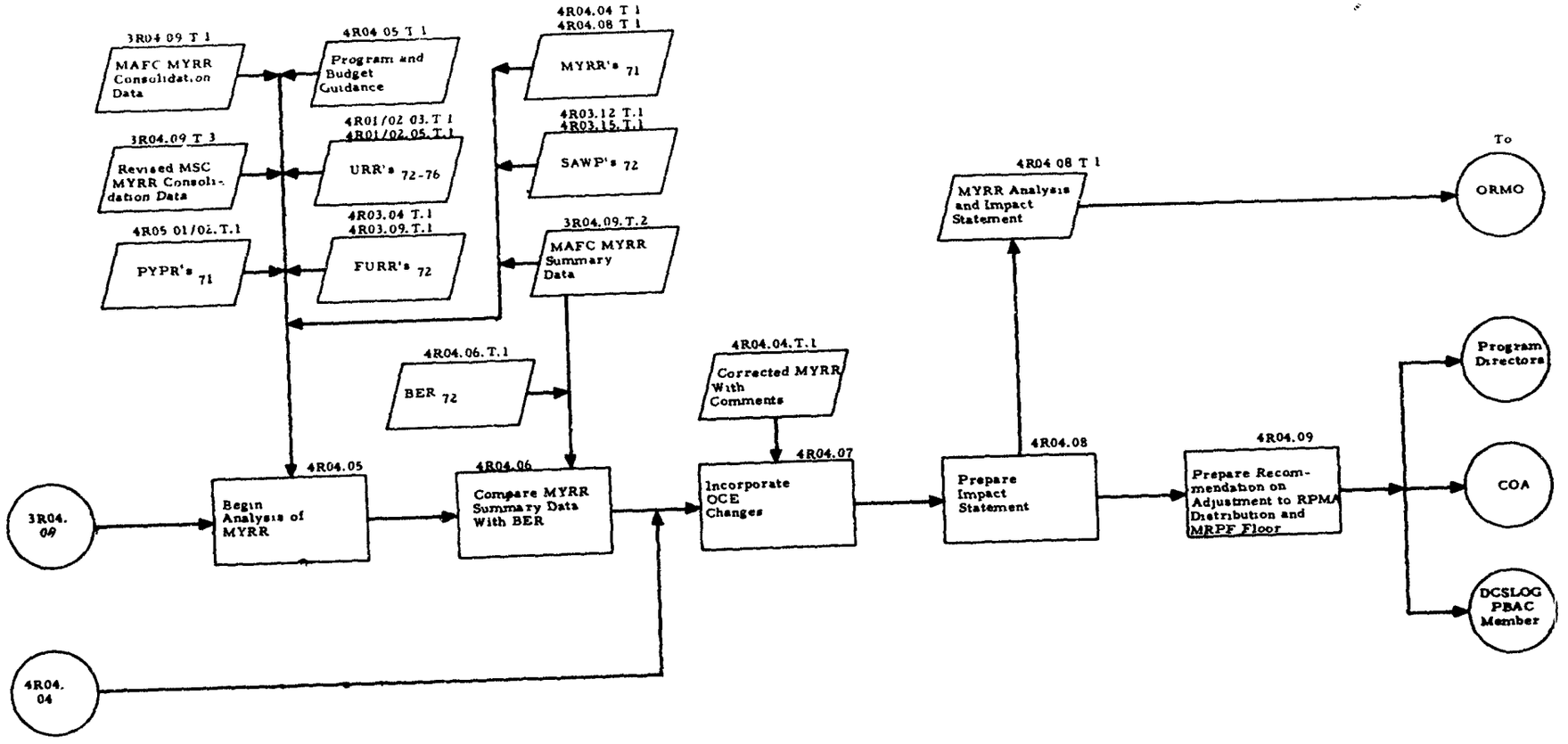

Note: Subscript (e.g., URR $_{71}$) denotes FY.
(Year of execution: FY72)

RPMA EXECUTION FUNCTION
(RPMAO PROCESSING OF THE MYRR)

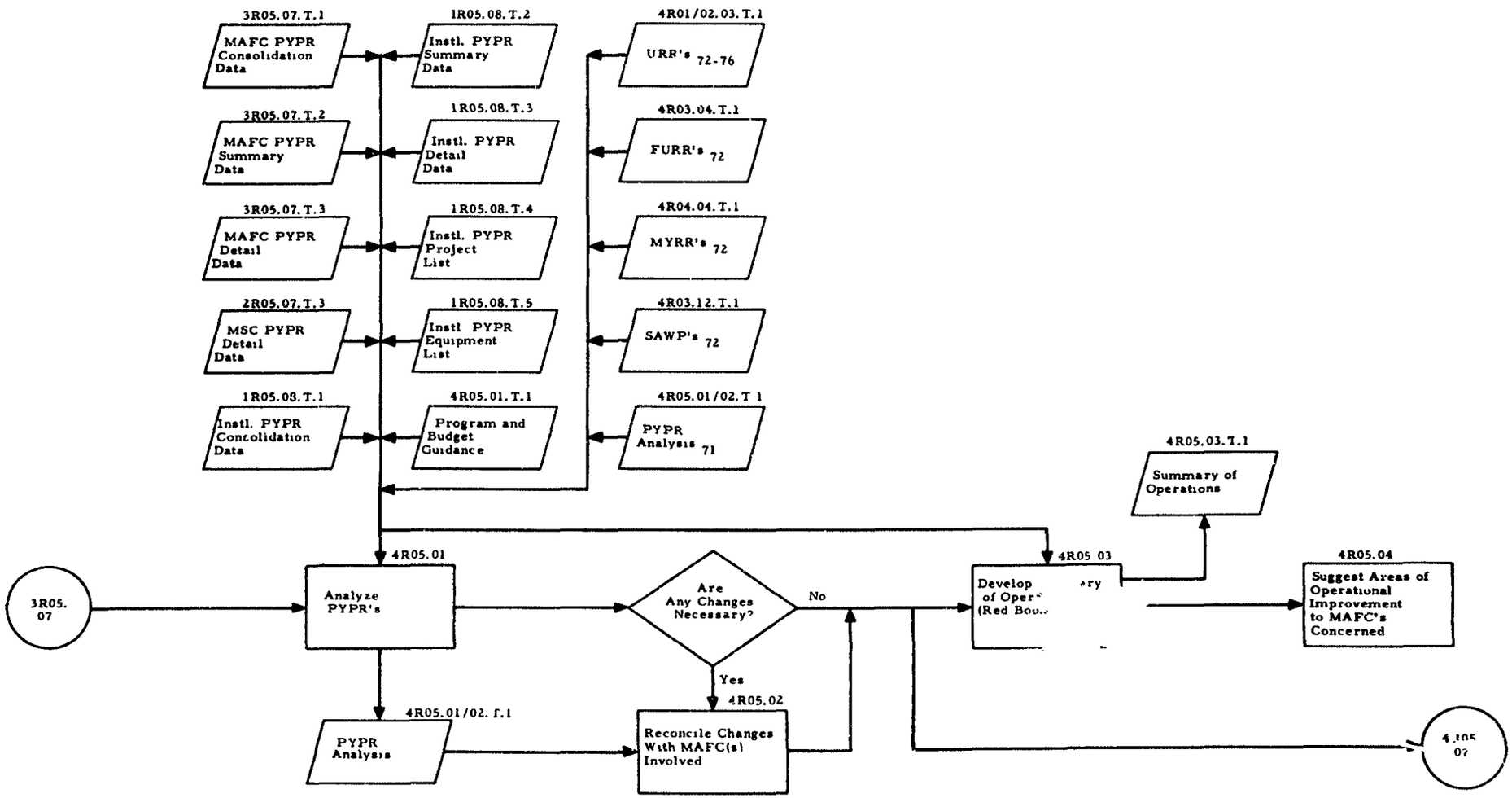

Note: Subscript (e.g., URR $_{71}$) denotes FY (Year of execution FY72)

RPMA REVIEW FUNCTION
(OCE PROCESSING OF THE PYPR)

IV-697

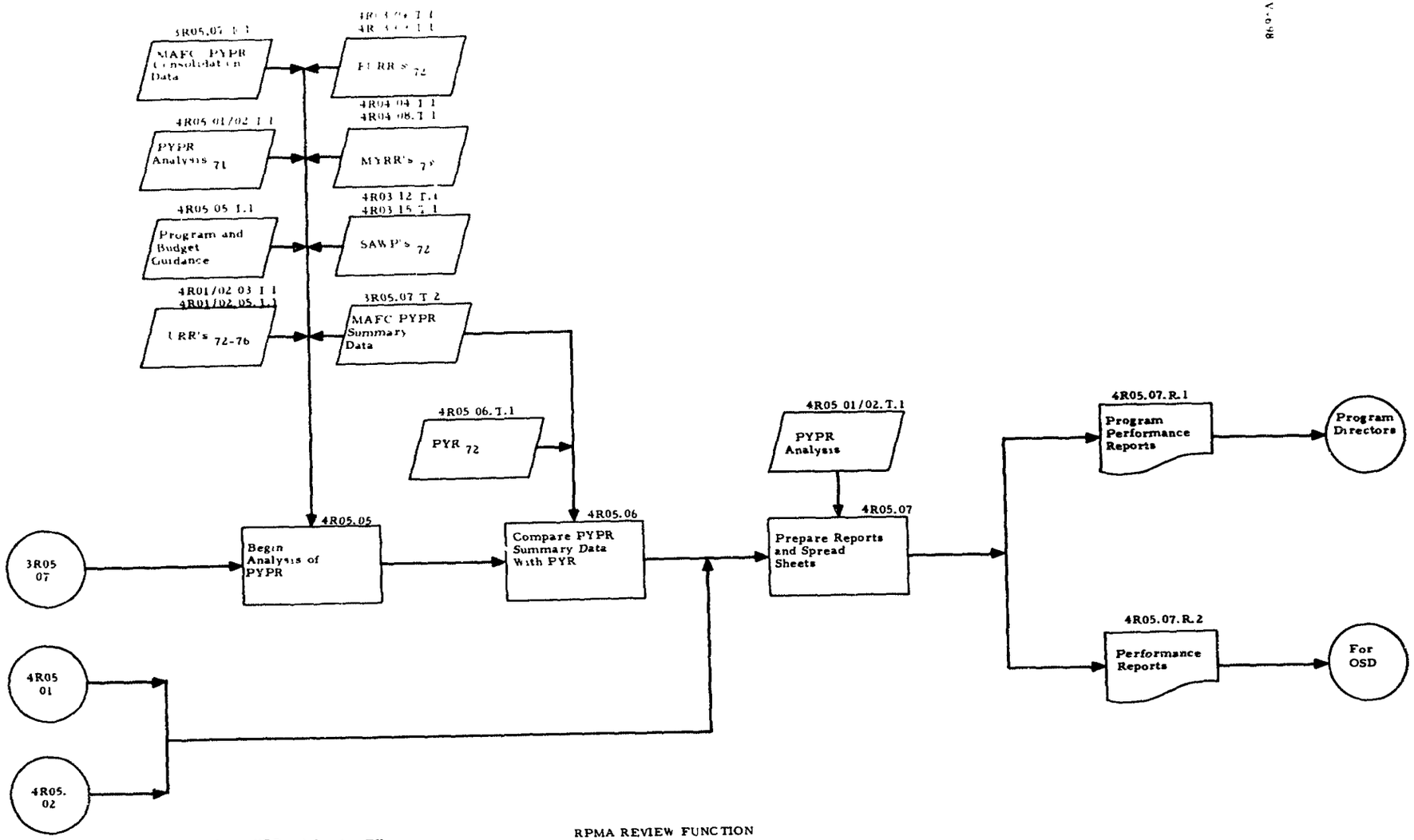

Note: Subscript (e.g., URR $_{71}$) denotes FY (Year of execution: FY72)

RPMA REVIEW FUNCTION
(RPMAO PROCESSING OF THE PYPR)

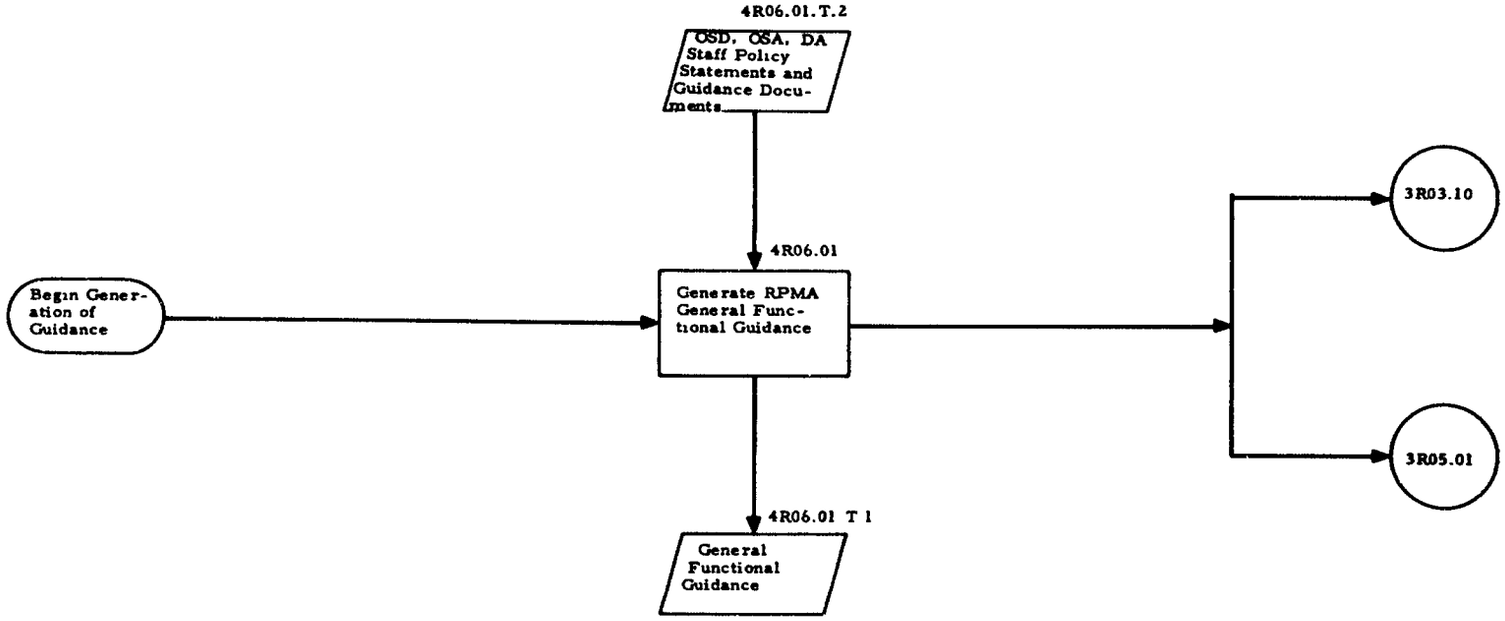

GENERATION OF RPMA GENERAL FUNCTIONAL GUIDANCE (RPMAO)

E. Variations from RPMA Notional Design

Section III and subsection IV.A. of this design report have set forth both an overview and a detailed description of the RPMA notional design for a strengthened RPMA functional management channel. As this is a CONUS-only design and the bulk of RPMA funding is expended by CONARC, the CONARC functional organization has been the basis for this design. However, CONUS encompasses commands other than CONARC whose functional organizations vary sufficiently to justify a variation from the notional design for providing these RPMA management data. Analysis has established that three variations from the notional design will provide an RPMA functional management reporting capability for all commands in CONUS. These variations address the CONUS commands as follows:

- Variation 1: STRATCOM, TSG, ASA, MTMTS
- Variation 2: AMC (less GOCO)
- Variation 3: GOCO (AMC)

The United States Military Academy (USMA), which is not a command, and the Army Map Service/Topographic Command occupy unique positions and have been considered in this analysis. It was not considered necessary to design a separate variation for these activities, as variation 1 with a minor change is applicable to them. The use of variation 1 for USMA and AMS Topographic Command is discussed in more detail in subsequent paragraphs. Functional organization and funding source were considered when designing the variations to the RPMA notional design. Conclusions were:

- The development of RPMA data at the installation level was similar regardless of funding source.
- The notional installation-level design could be used for all CONUS commands with the exception of GOCO, which, due to its unique position in the RPMA management channel, required a modification of the installation design.
- Functional capability for RPMA management at MSC and MAFC was the major cause for variation from the notional design.

- Only slight changes from the notional design were necessary at HQ DA to accommodate the revised MSC, MAFC functions reflected in the variations.

While not a variation in the sense in which the foregoing variations have been described, it is considered within the scope of this discussion to address the intent of DA Circular 37-44, Reimbursement For Base Operations Support Received By Army Tenant/Satellite Activities. This circular, published in August 1968, establishes that tenants/satellites will reimburse the host installation for minor construction work determined necessary solely for tenant/satellite mission activity, even though the host and the tenant/satellite are financed from the same appropriation.

This circular is particularly applicable to commands such as Combat Developments Command and Recruiting Command, whose activities receive base operation support on a non-reimbursable basis.

Visits to the field verified that tenant/satellites are aware of this circular and are requesting funding for minor construction projects.

The IFS RPMA design will incorporate those projects reported by the users (identified by program element) to the post engineer and included in the project list of the URR, into an output by the RPMA office to the commands which will provide funding. These projects should remain within the RPMA channel to provide technical review and to afford the RPMA office an opportunity to review the projects within the context of total RPMA requirements.

The following subsections describe each of the variations and how they vary from the notional design. Flow charts (pages IV-704 to -757) have been prepared on an exception basis for variations 1 and 2 to better illustrate the differences from the notional design rather than prepare a full set of flow charts (installation to HQ DA) for each variation with the differences obscured. Variation 3 (GOCO), however, is portrayed by flow charts (pages IV-758 to -774) from installation HQ DA as the GOCO reporting of RPMA management data does depart from the notional design sufficiently to warrant separate flowcharting.

1. Variation 1

STRATCOM, ASA, TSG, MTMTS, and USMA and AMS/ Topographic Command are treated similarly in this variation. No change from the notional design is envisioned for the preparation of RPMA data at STRATCOM, ASA, and TSG installations. As stated previously, the notional design has been structured against the CONARC functional organization. It is in the area of the MSC and MAFC that significant differences occur. For the purposes of the RPMA design, none of these commands was considered to have a functional capability at the MSC level. These commands are MAFC's but all possess a very limited technical engineer and RPMA management capability. For design purposes, therefore, it was considered desirable to maintain these commands in the RPMA functional management channel, but to augment their capability to provide the RPMA functional management required. As can be seen from the flow charts (pages IV-704 to -706, IV-715 to -117, IV-727 to -729, IV-737 to -739 and IV-749 to -751), STRATCOM, ASA, and TSG will act in the role of the MSC in manipulating RPMA data. Significant differences can be seen, however, between the notional design MSC and STRATCOM, ASA, and TSG. Due to their limited capability, these commands will perform a review and a consolidation and summarizing function. This is considered feasible within their capabilities and will enable them to monitor RPMA activities. The functions performed by the MSC in the notional design will be accomplished by OCE in this variation as OCE acts in the role of the MAFC. This is considered feasible since only a limited number of installations is involved, and OCE, at present, performs technical functions for these commands. As a result of acting in the role of the MAFC, some of the operations of OCE shown in the notional design are not required since they would be redundant and therefore have been eliminated from the variation. The foregoing comments are applicable to the other commands (MTMTS), AMS/Topographic Command, and special activity (USMA) addressed in this variation with only slight modification. In the case of MTMTS, which does have an MSC structure with eastern and western area commands, the modification occurs at the installation level. In the western area command the post

engineer is colocated with and is part of the facilities division of the command; therefore, for design purposes the command should perform the functions indicated in the notional design for the installation level. The eastern area command is more complex in that it is not colocated with the two port facilities included in the command. In this case each port facility Military Ocean Terminal (MOT) Bayonne and MOT Sunny Point will develop and report RPMA management data in accordance with the notional design for installations. The Facility Management Branch of the Directorate of Services, eastern area command, will review this installation input and forward it to MTMTS.

AMS/Topographic Command is treated as an installation directly under OCE, as Topographic Command is colocated with Army Map Service and does not have a capability to participate in the design as an MSC. Therefore, AMS will prepare RPMA management data in the same manner as described for other commands but will forward these data directly to OCE in the role of an MAFC, thereby eliminating the portion of the variation applying to the MSC.

The United States Military Academy will prepare RPMA management data in the same manner as described for the other commands, but, as with AMS/Topographic Command, will forward these data directly to OCE in the role of an MAFC, thereby eliminating that portion of the variation applying to the MSC.

2. Variation 2 - AMC (Less GOCO)

This variation is the same as variation 1 at the installation and MSC level. As in variation 1, the notional design for installation is applicable for AMC installations. AMC MSC's are similar in RPMA management capability to STRATCOM, ASA, TSG, and MTMTS. Therefore, the flowcharts for this echelon reflect the same operations. The differences for AMC exist at the MAFC level. AMC does have an excellent engineer functional management capability in the AMC Installation and Services Agency located at Rock Island, Illinois. Variation 2 takes

this capability into account and has RPMA data going from the MSC to AMC Installations and Services Agency (I&SA) where this agency performs functions similar to those shown for OCE in variation 1. As indicated in the flow charts (pages IV-710 to -713, IV-721 to -723, IV-732 to -734, IV-743 to -745, and IV-754 to -755), AMC I&S at HQ AMC then reviews the inputs of RPMA data from AMC I&SA before forwarding these data on to OCE where the notional design once more becomes applicable.

3. Variation 3 - GOCO

Flow charts (pages IV-758 to -774) have been prepared separately for the preparation and flow of RPMA management data at a GOCO, since this activity is distinctly different from the type of military activities depicted in the notional design and variations 1 and 2. At present, the only RPMA data available from the GOCO's are a summarized form of the technical data report. Analysis indicates that more detailed RPMA data can be made available by the contractor when stipulated in the contract. Variation 3 offers a means of modifying the notional design to receive from the GOCO's planning (URR), budgeting (SAWP), and performance (PYPR) data that will provide Army facility managers and technical evaluators credible data on the maintenance and repair of the Army's GOCO's. All levels of detail are reflected in this variation and can be provided if justified.

Flow charts are shown for all levels — installation to HQ DA — for the preparation of the URR, but since the operations performed from MSC to HQ DA are the same for the SAWP and PYPR, these flowcharts have not been repeated.

The modification of the notional design for the GOCO has been primarily in providing a review-only capability to higher echelons. Due to the nature of a GOCO and the contracts under which they are operated, it is not visualized that higher echelons would maintain the same control as that exercised over other military installations. The review processes shown, however, would provide a monitoring capability to the AMC commands.

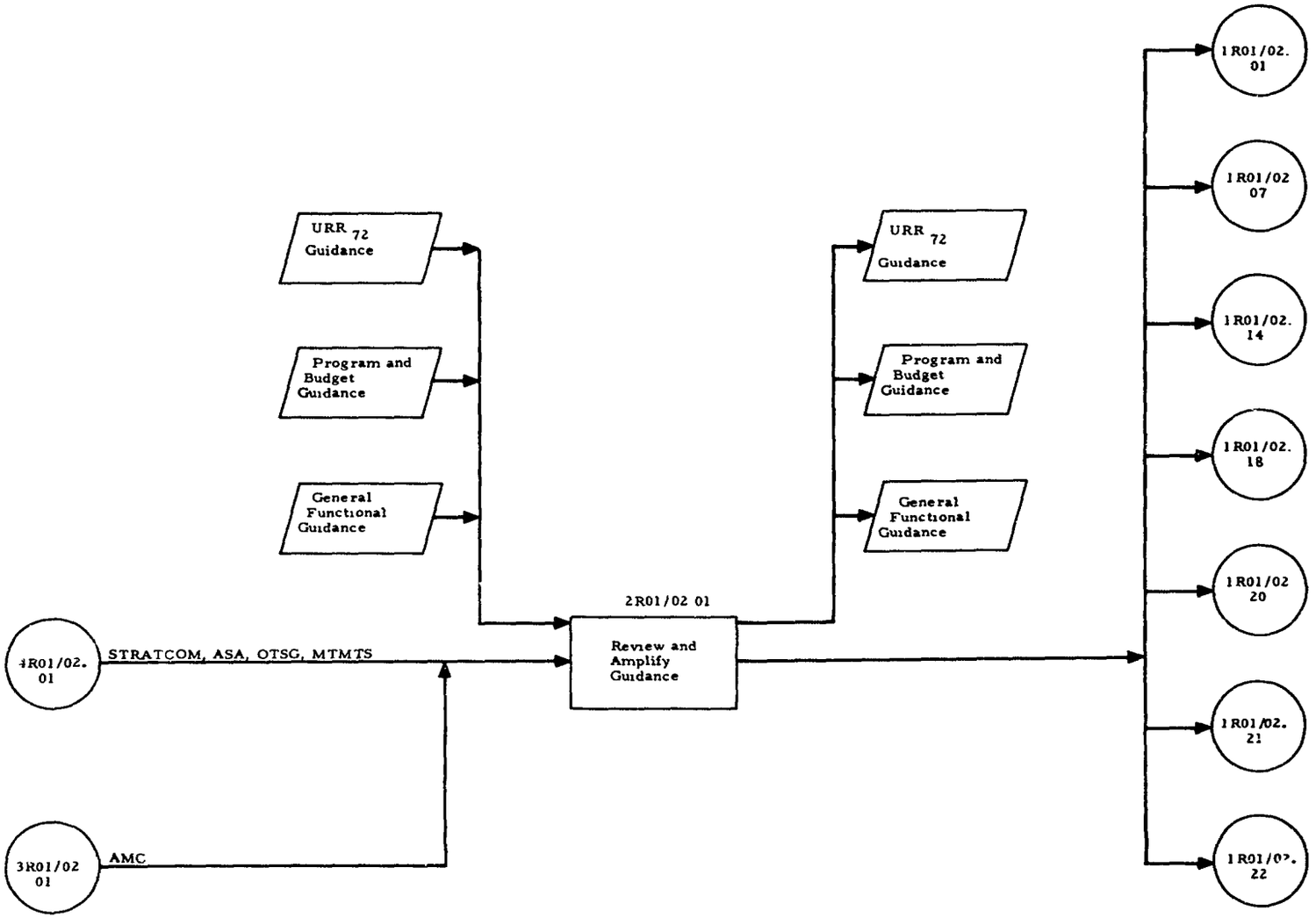

Note: Subscript denotes FY.
(Year of execution: FY72)

RPMA PLANNING AND PROGRAMMING FUNCTION FOR STRATCOM, ASA, OTSG, MTMTS, AND AMC
(MSC PREPARATION OF THE URR)

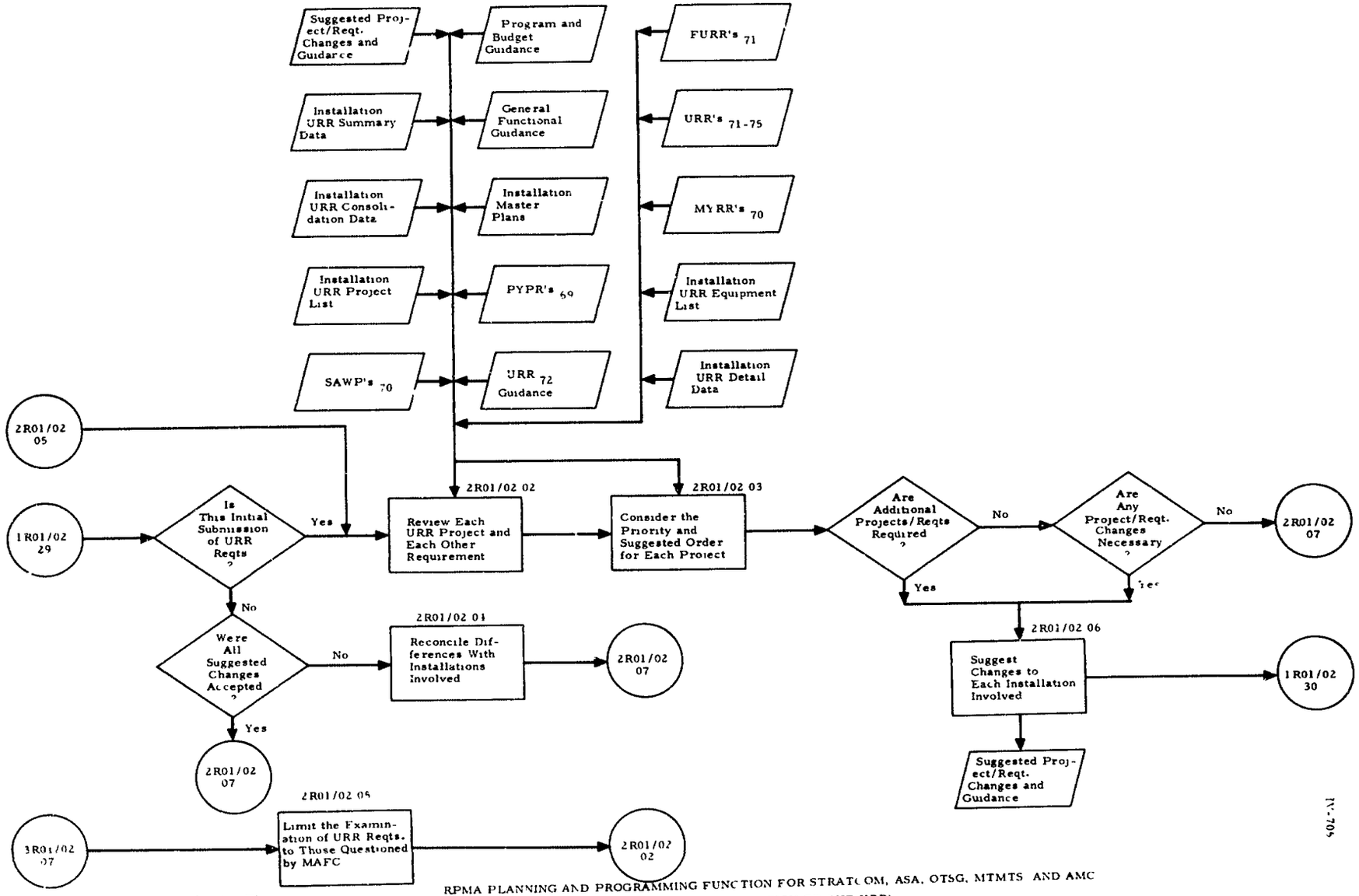

Note: Subscript denotes FY (Year of execution FY72)

RPMA PLANNING AND PROGRAMMING FUNCTION FOR STRATCOM, ASA, OTSG, MTMTS AND AMC (MSC PREPARATION OF THE URR)

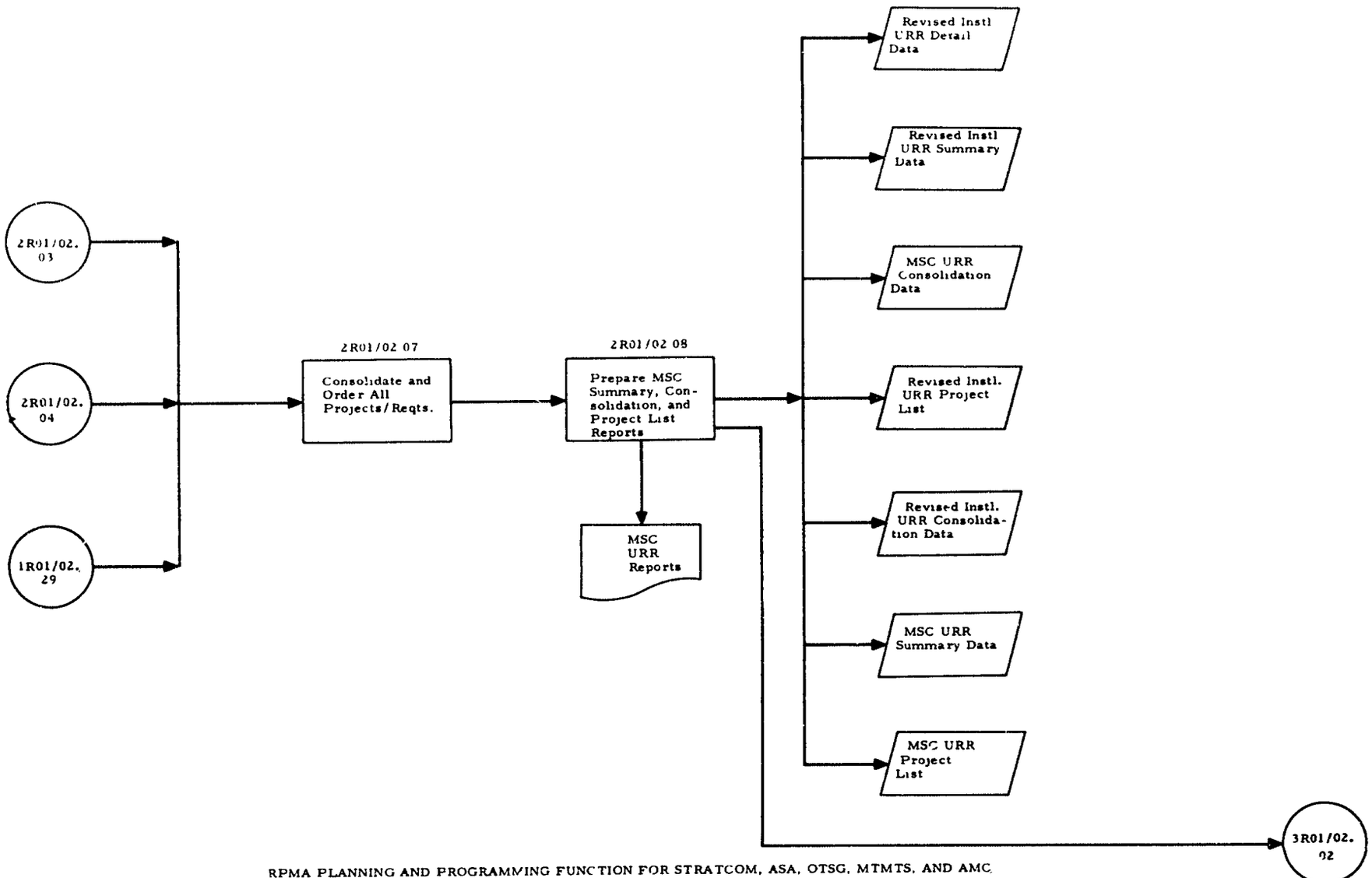

RPMA PLANNING AND PROGRAMMING FUNCTION FOR STRATCOM, ASA, OTSG, MTMTS, AND AMC
(MSC PREPARATION OF THE URR)

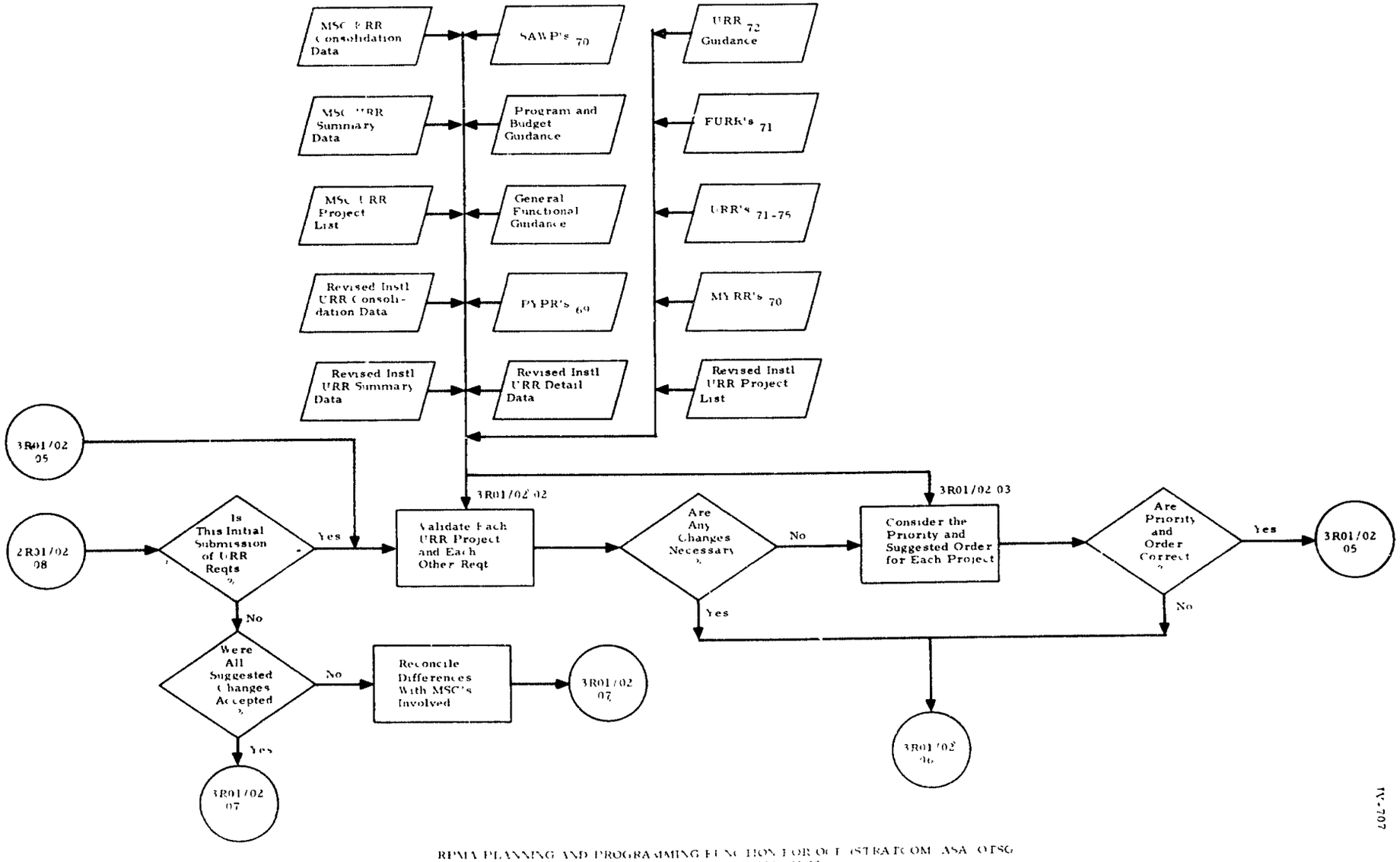

Note Subscript denotes FY
(Year of execution: FY72)

RPMA PLANNING AND PROGRAMMING FUNCTION FOR OCE (STRATCOM, ASA, OTSG AND MTMTS) AND AMC [illegible]
(MAFC PREPARATION OF [illegible] URR)

IV-707

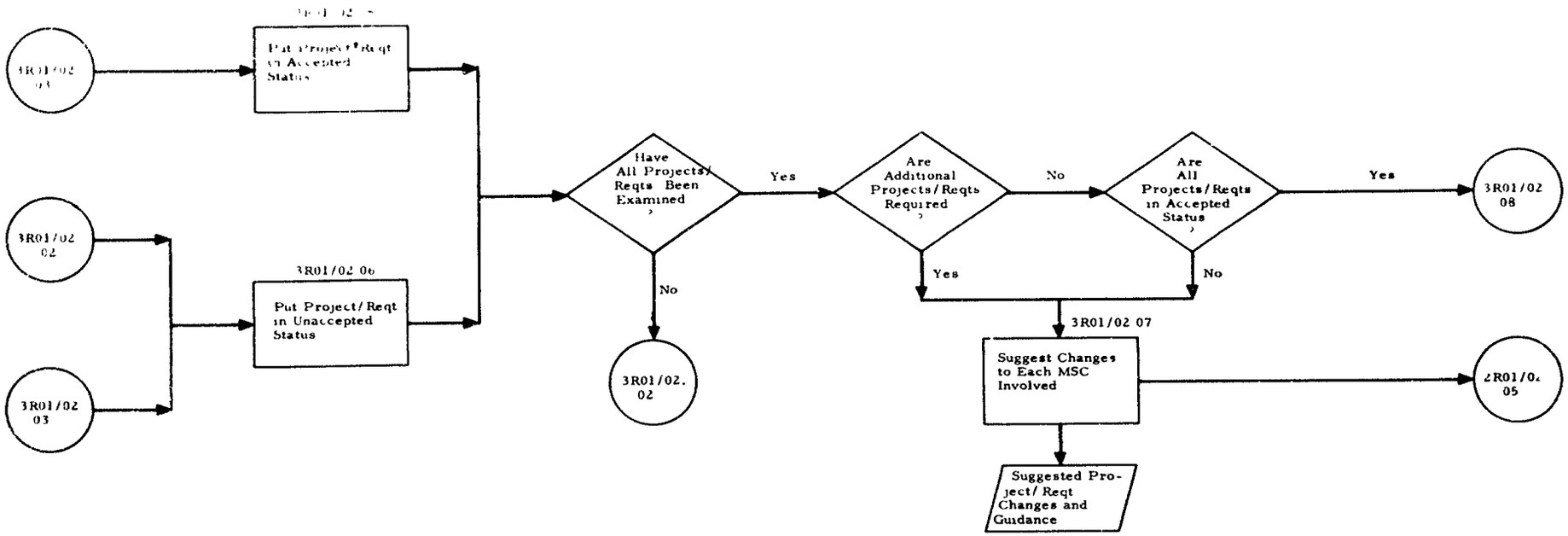

RPMA PLANNING AND PROGRAMMING FUNCTION FOR OCE (STRATCOM, ASA, OTSG, MTMTS) AND AMC I & SA

(MAFC PREPARATION OF THE URR)

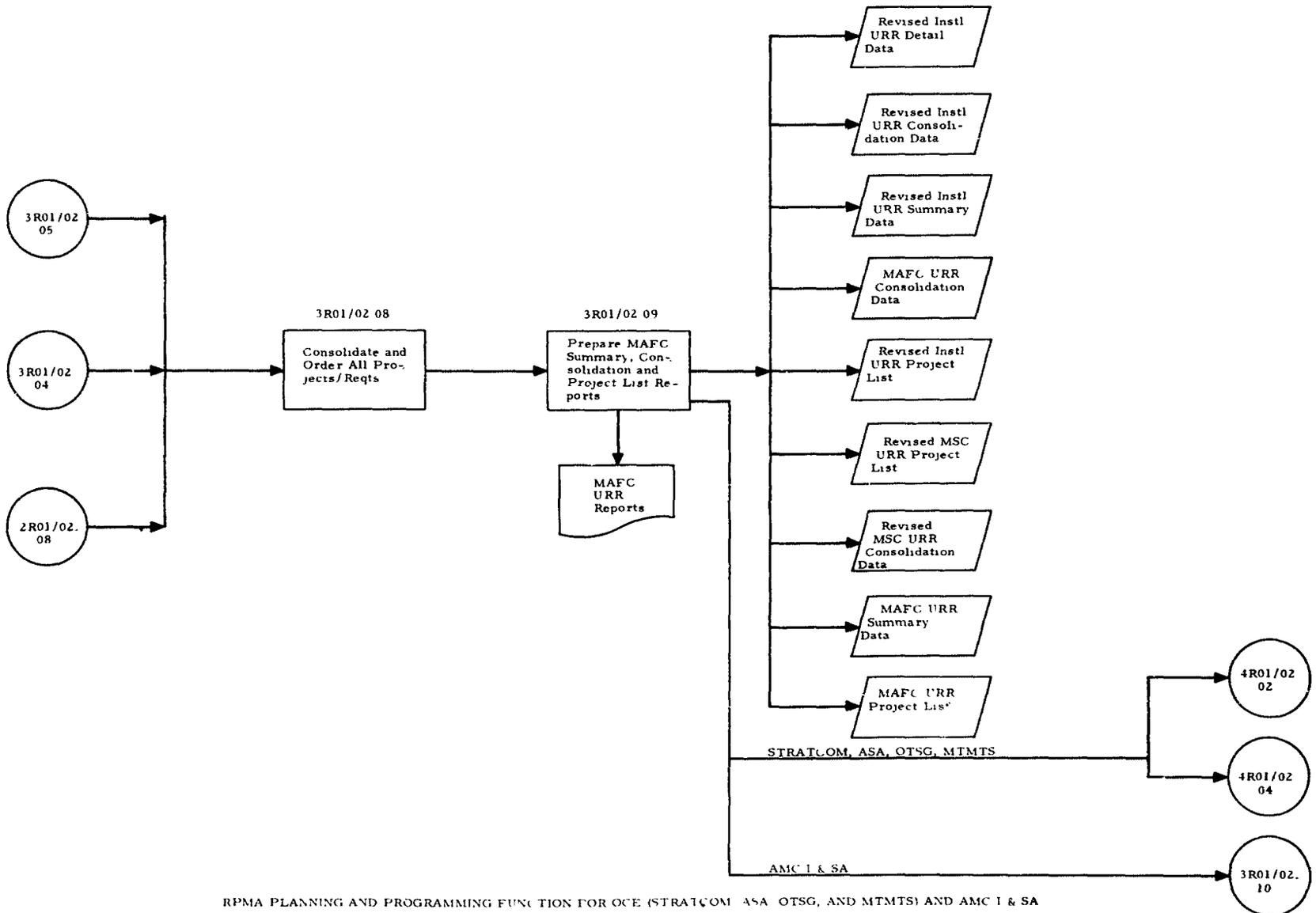

RPMA PLANNING AND PROGRAMMING FUNCTION FOR OCE (STRATCOM, ASA, OTSG, AND MTMTS) AND AMC I & SA (MAFC PREPARATION OF THE URR)

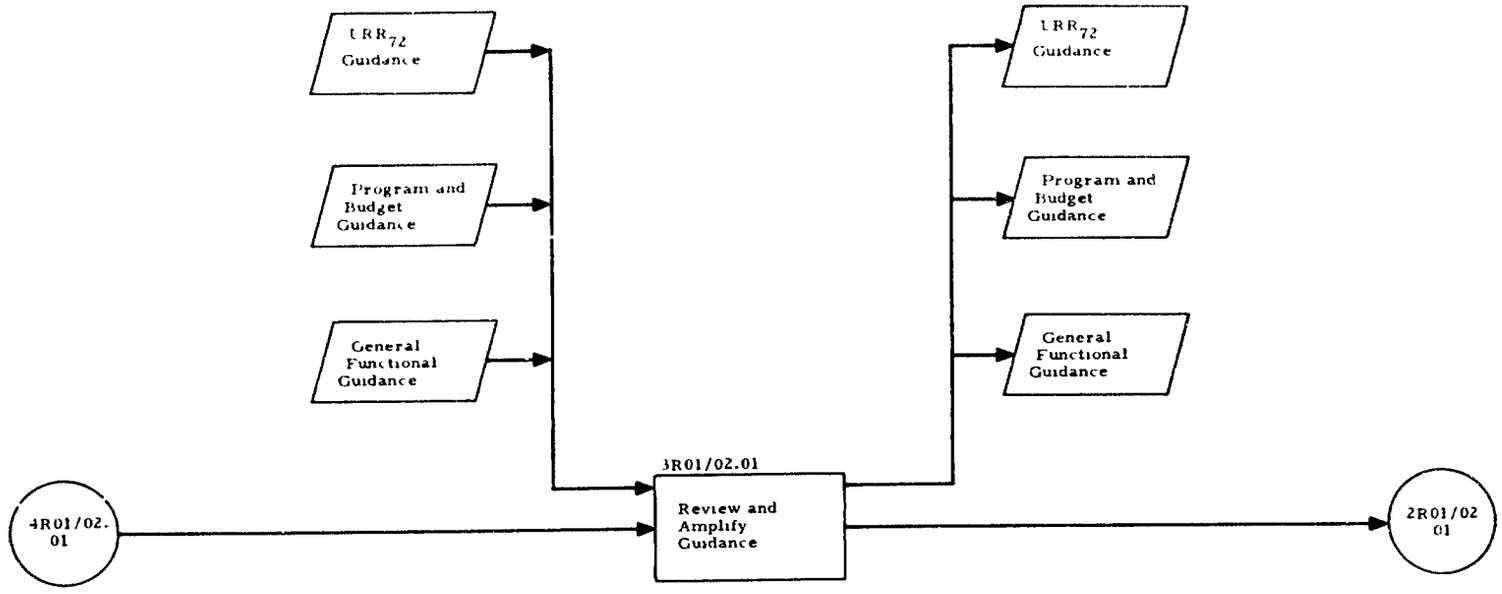

Note: Subscript denotes FY.
(Year of execution FY72)

RPMA PLANNING AND PROGRAMMING FUNCTION FOR AMC I & S
(MAFC PREPARATION OF THE URR)

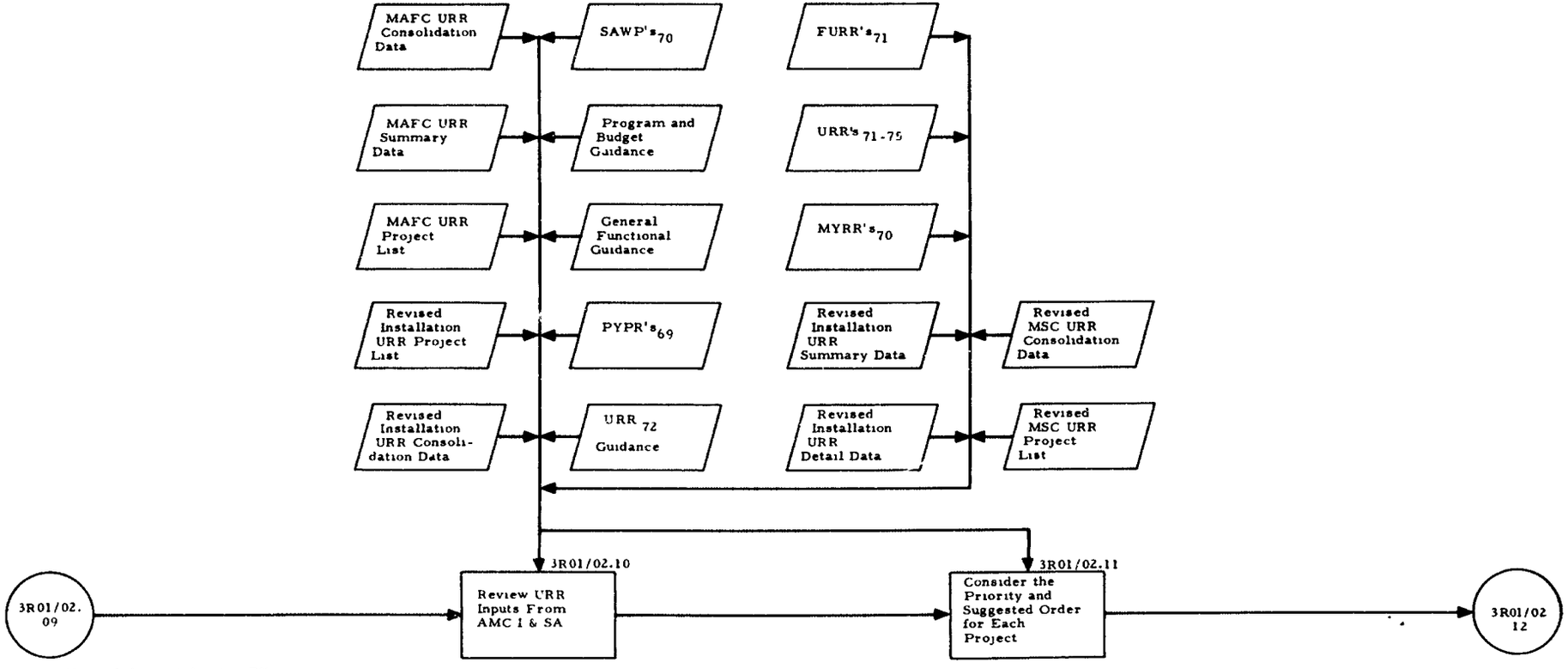

Note Subscript denotes FY. (Year of execution FY72)

RPMA PLANNING AND PROGRAMMING FUNCTION FOR AMC I & S
(MAFC PREPARATION OF THE URR)

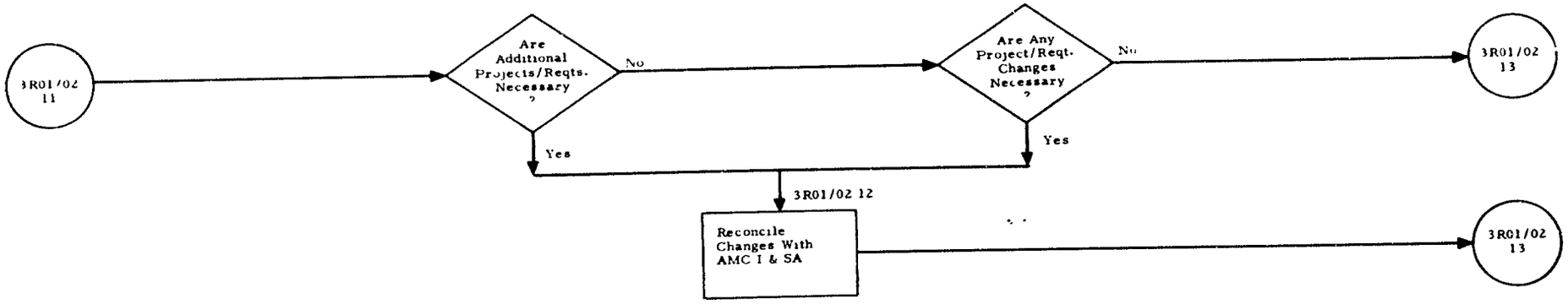

RPMA PLANNING AND PROGRAMMING FUNCTION FOR AMC I & S
(MAFC PREPARATION OF THE URR)

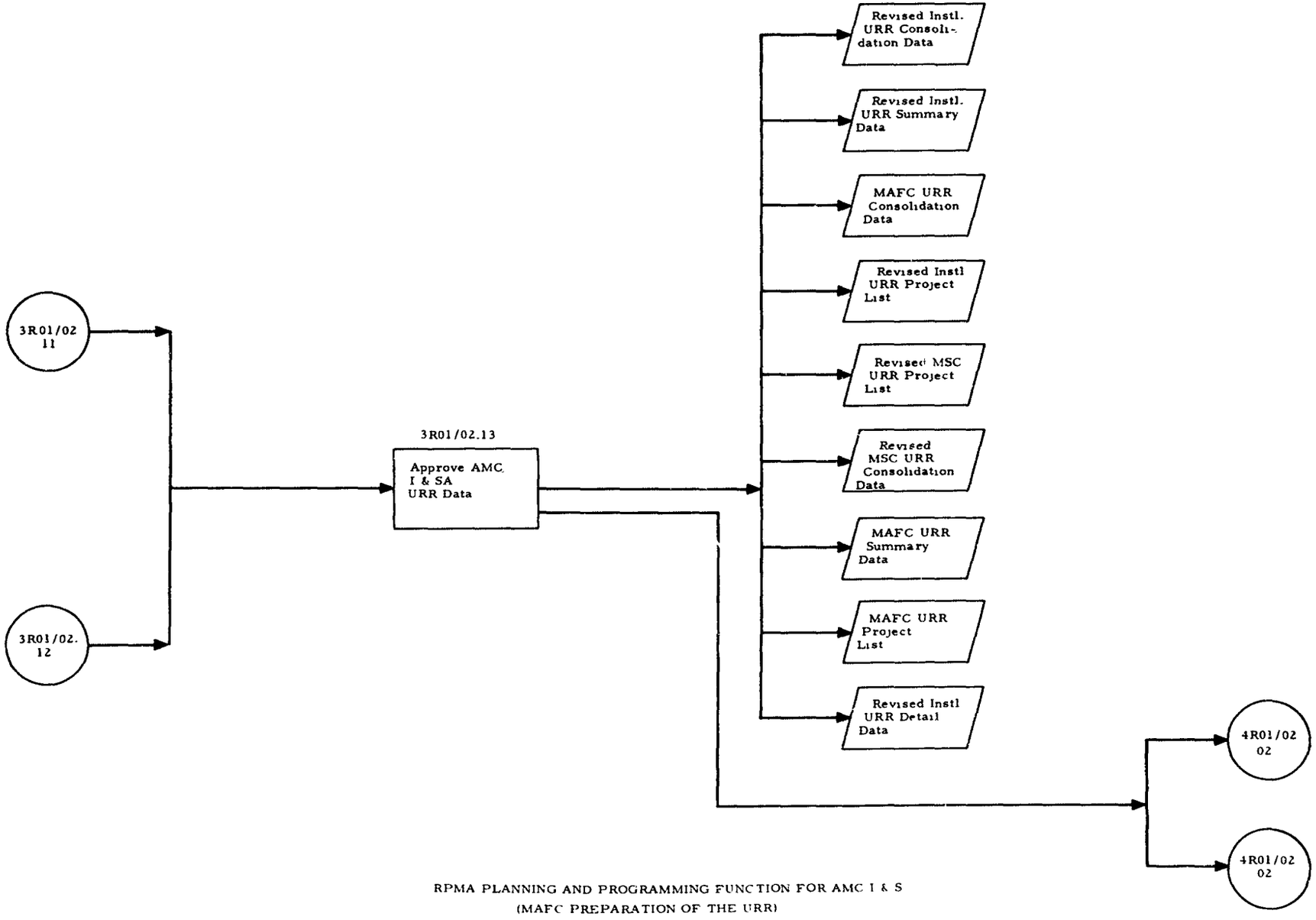

RPMA PLANNING AND PROGRAMMING FUNCTION FOR AMC I & S
(MAFC PREPARATION OF THE URR)

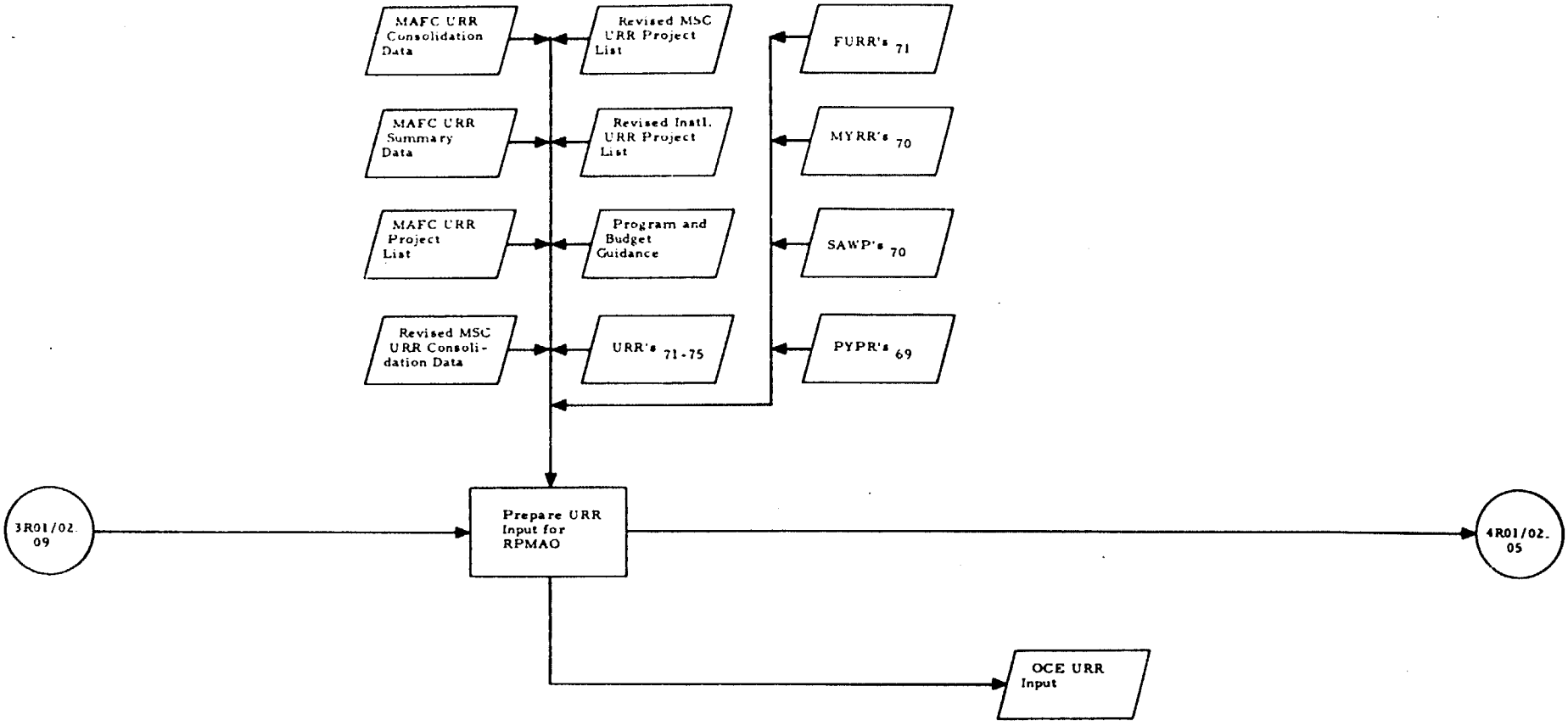

Note: Subscript (e.g., URR_{71}) denotes FY.
(Year of execution: FY72)

RPMA PLANNING AND PROGRAMMING FUNCTION FOR STRATCOM, ASA, OTSG, AND MTMTS
(OCE PROCESSING OF THE URR)

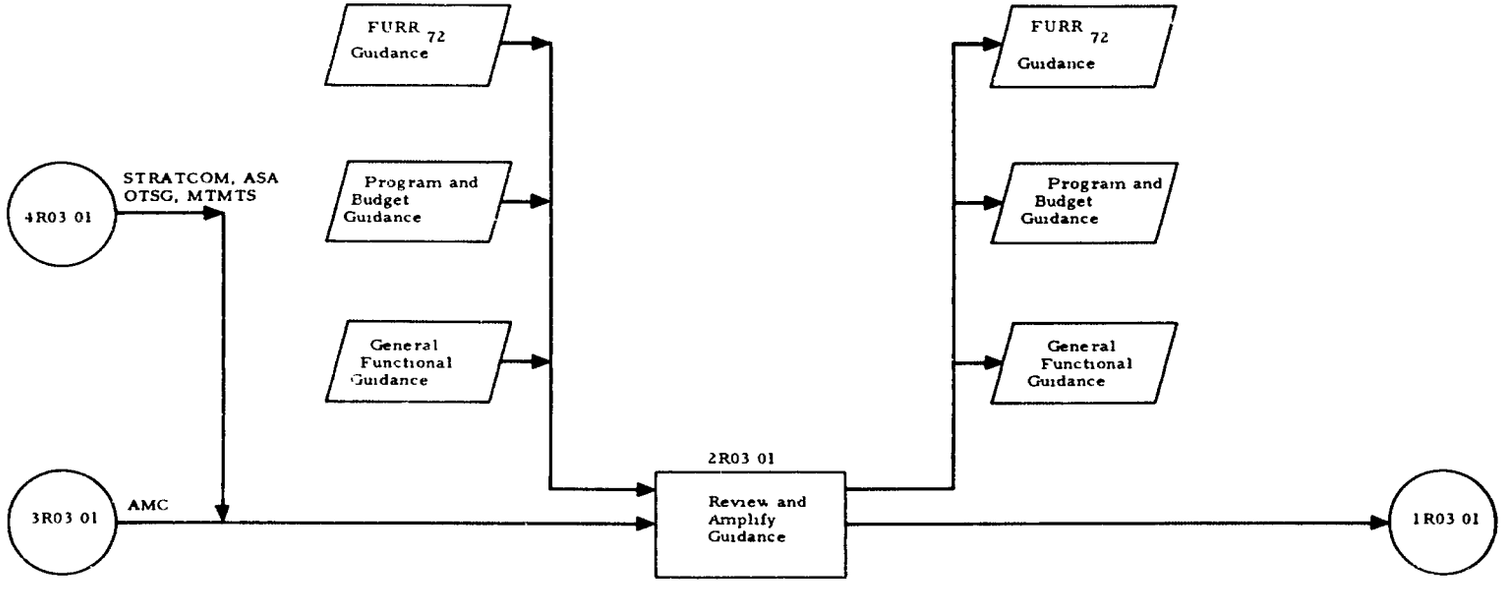

Note. Subscript denotes FY
(Year of execution FY72)

RPMA BUDGETING FUNCTION FOR STRATCOM, ASA, OTSG, MTMTS, AND AMC
(MSC PREPARATION OF THE FUPR)

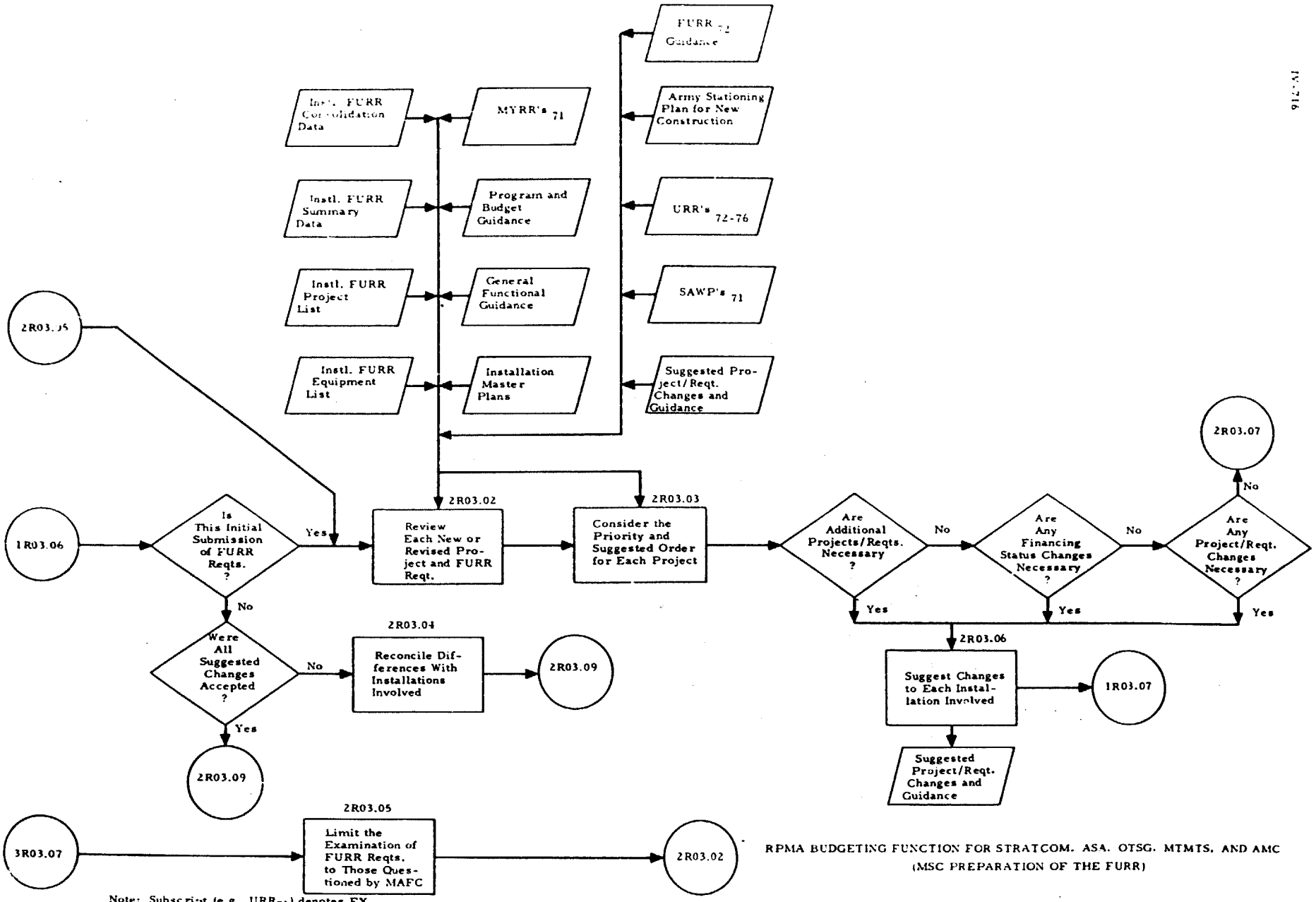

RPMA BUDGETING FUNCTION FOR STRATCOM, ASA, OTSG, MTMTS, AND AMC
(MSC PREPARATION OF THE FURR)

Note: Subscript (e.g., URR_{71}) denotes FY.
(Year of execution: FY72)

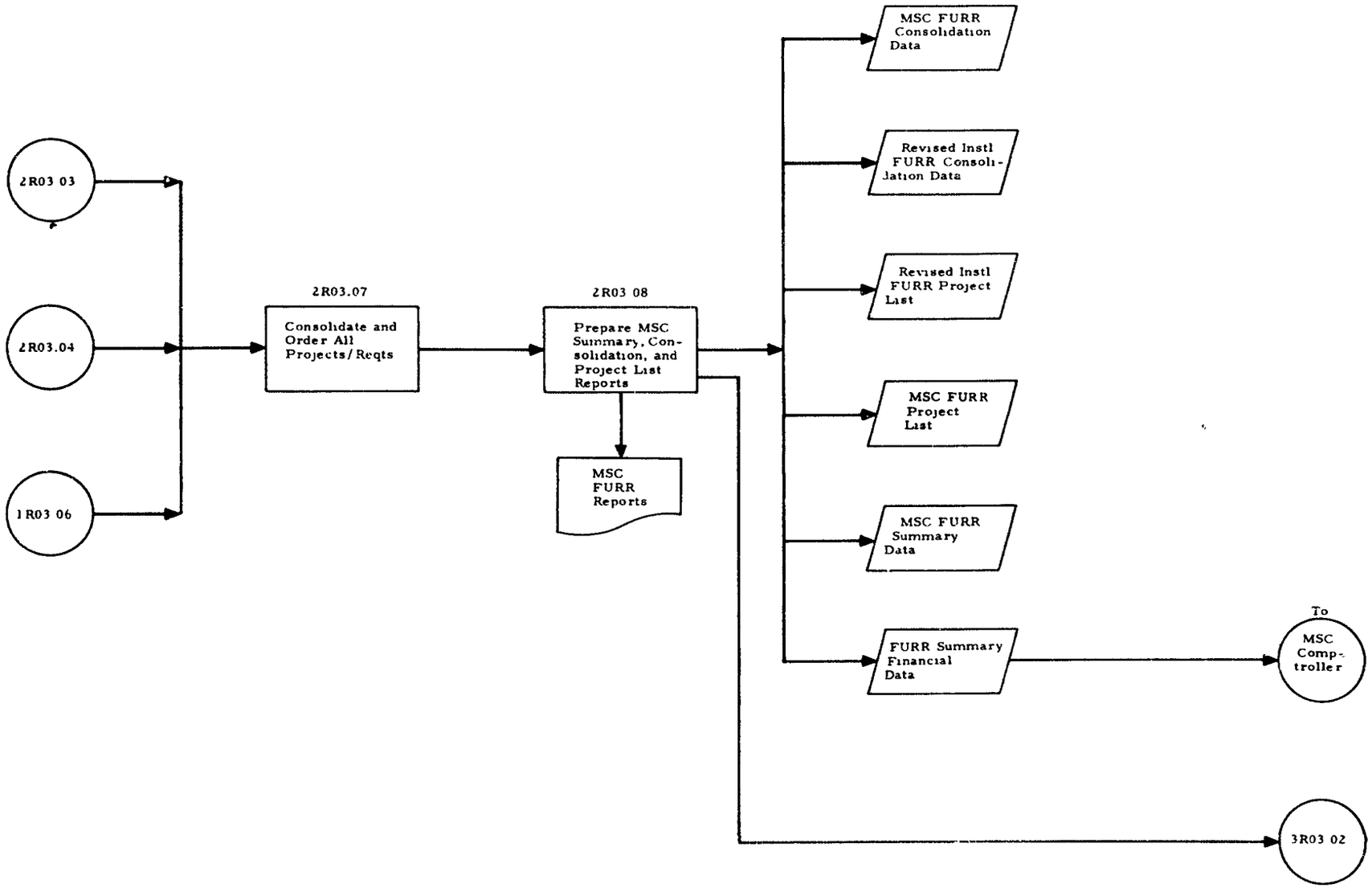

RPMA BUDGETING FUNCTION FOR STRATCOM, ASA, OTSG, MTMTS, AND AMC
(MSC PREPARATION OF THE FURR)

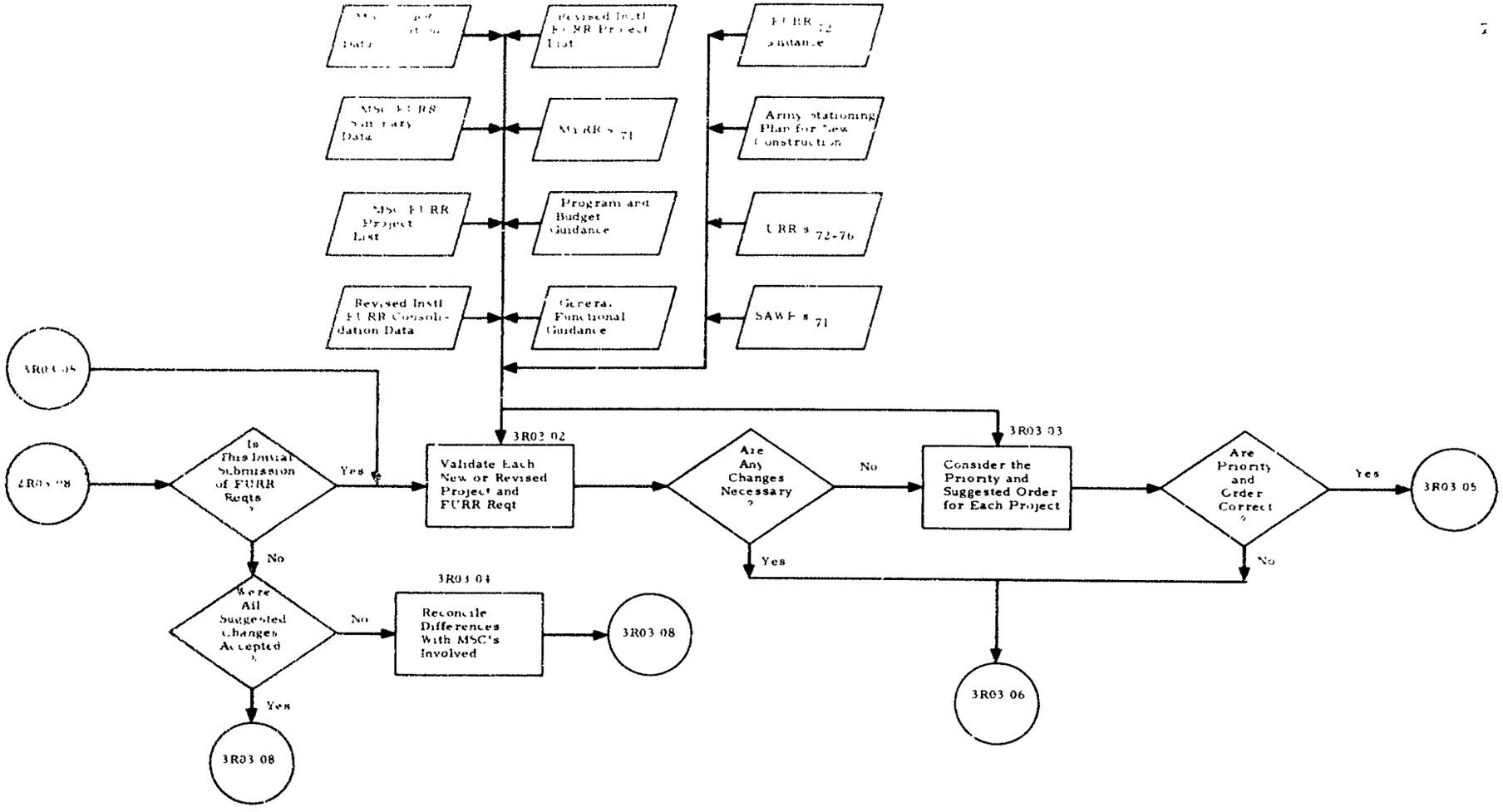

Note: Subscript denotes FY
(Year of execution: FY72)

RPMA BUDGETING FUNCTION FOR OCE (STRATCOM, ASA, OTSG, AND MTMTS)
AND AMC I&SA
(MAFC PREPARATION OF THE FURR)

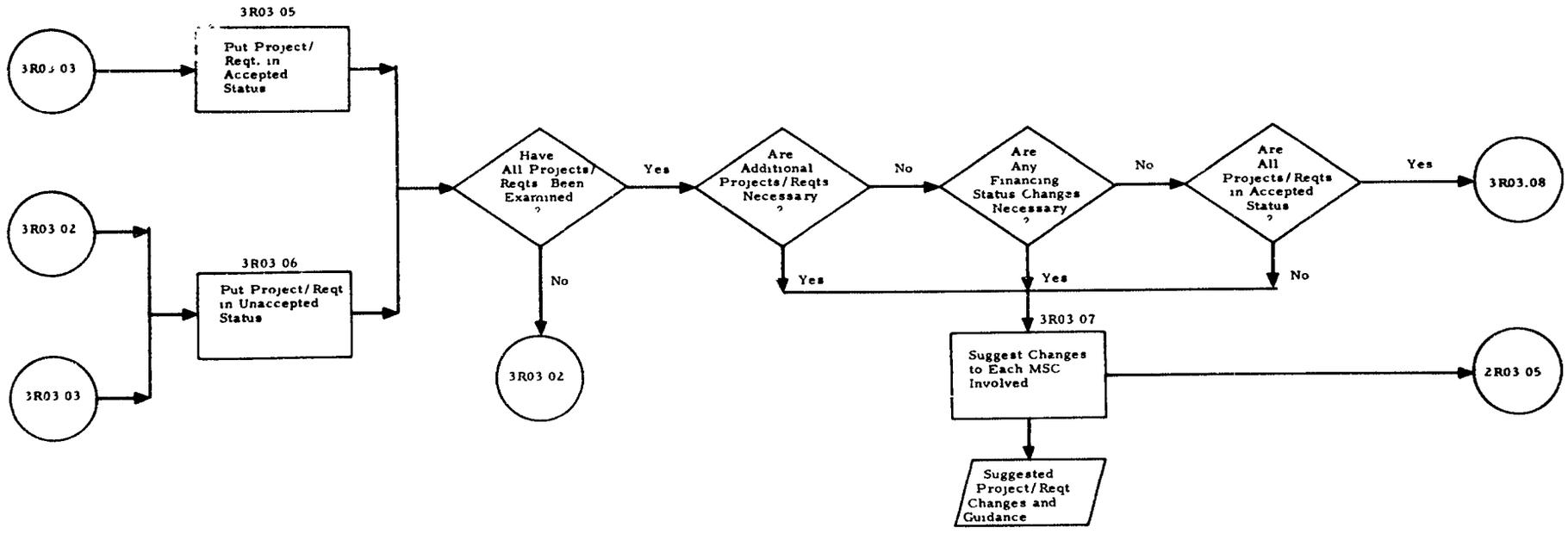

RPMA BUDGETING FUNCTION FOR OCE (STRATCOM, ASA, OTSG, MTMTS) AND AMC 1 & SA
(MAFC PREPARATION OF THE FURR)

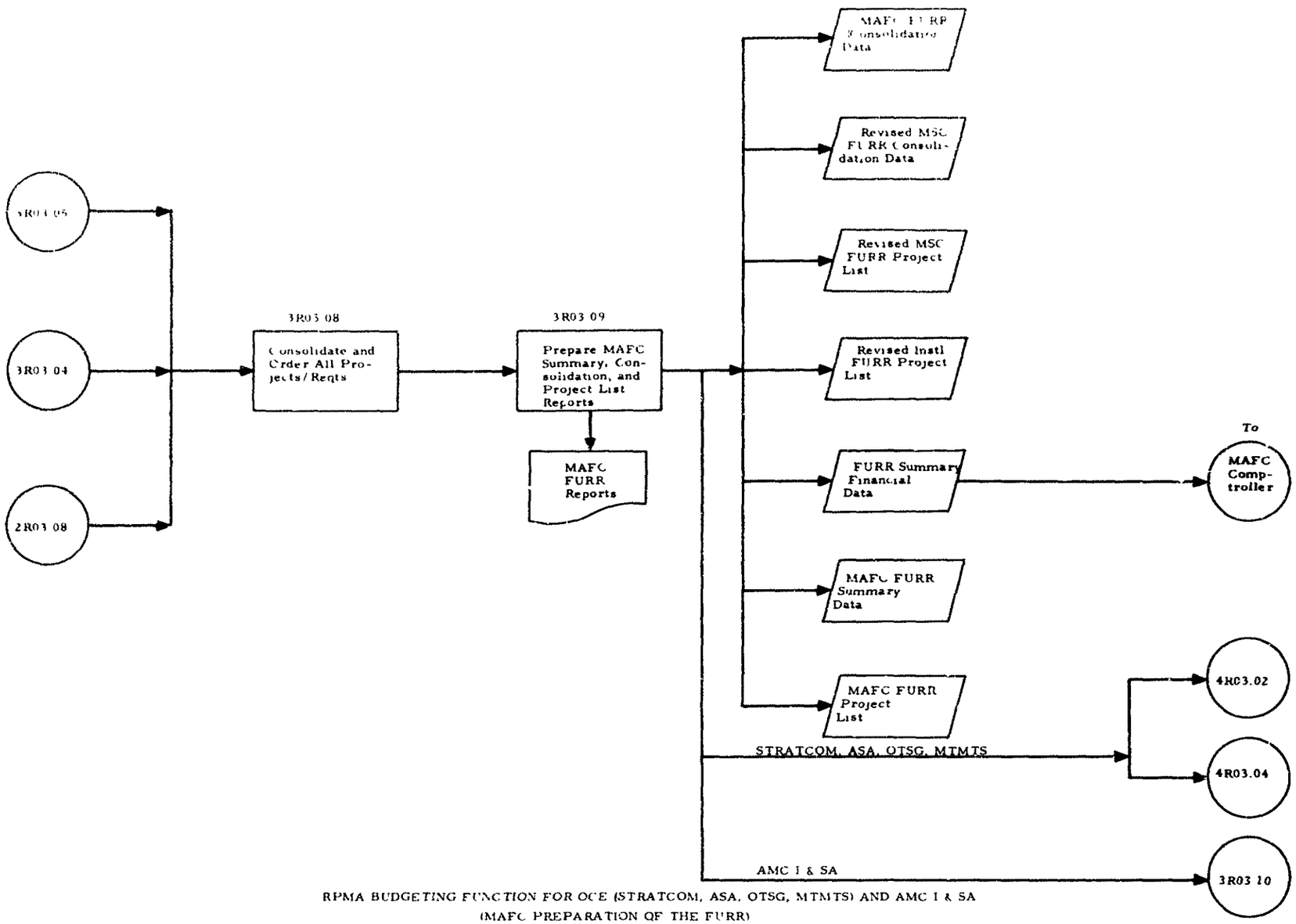

RPMA BUDGETING FUNCTION FOR OCE (STRATCOM, ASA, OTSG, MTMTS) AND AMC I & SA
(MAFC PREPARATION OF THE FURR)

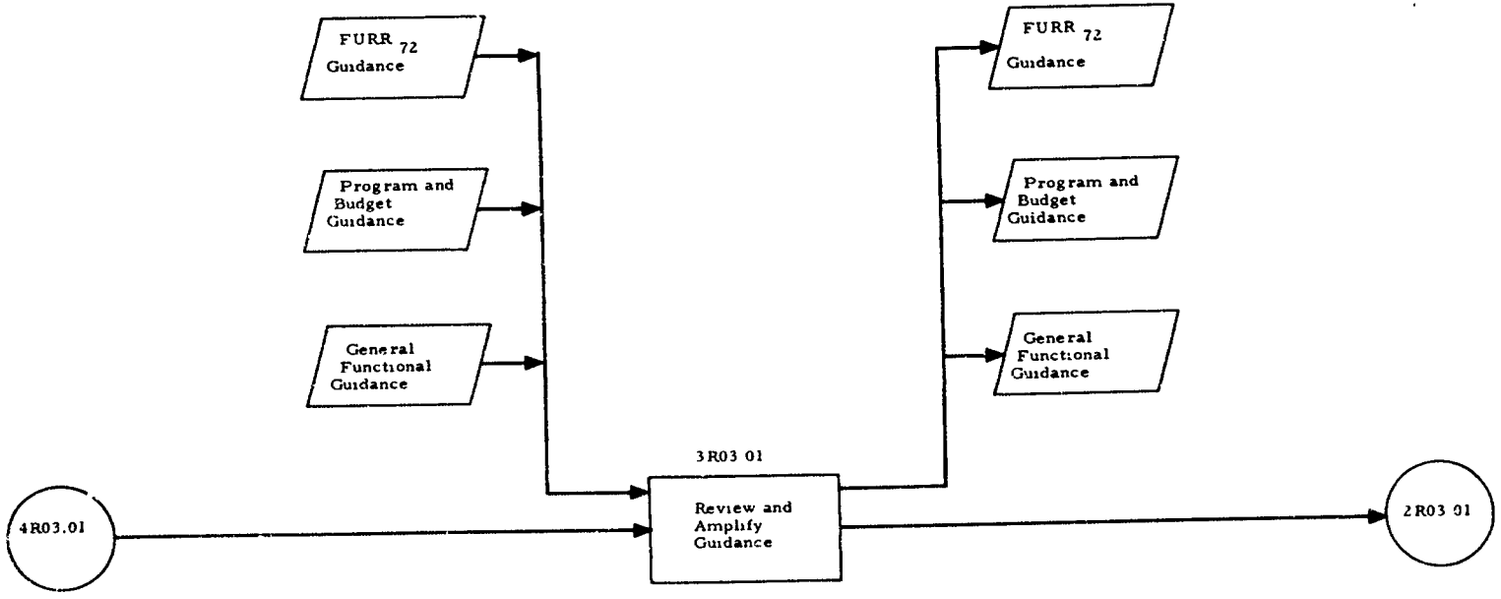

RPMA BUDGETING FUNCTION FOR AMC I & S.
(MAFC PREPARATION OF THE FURR)

Note Subscript denotes FY
(Year of execution: FY72)

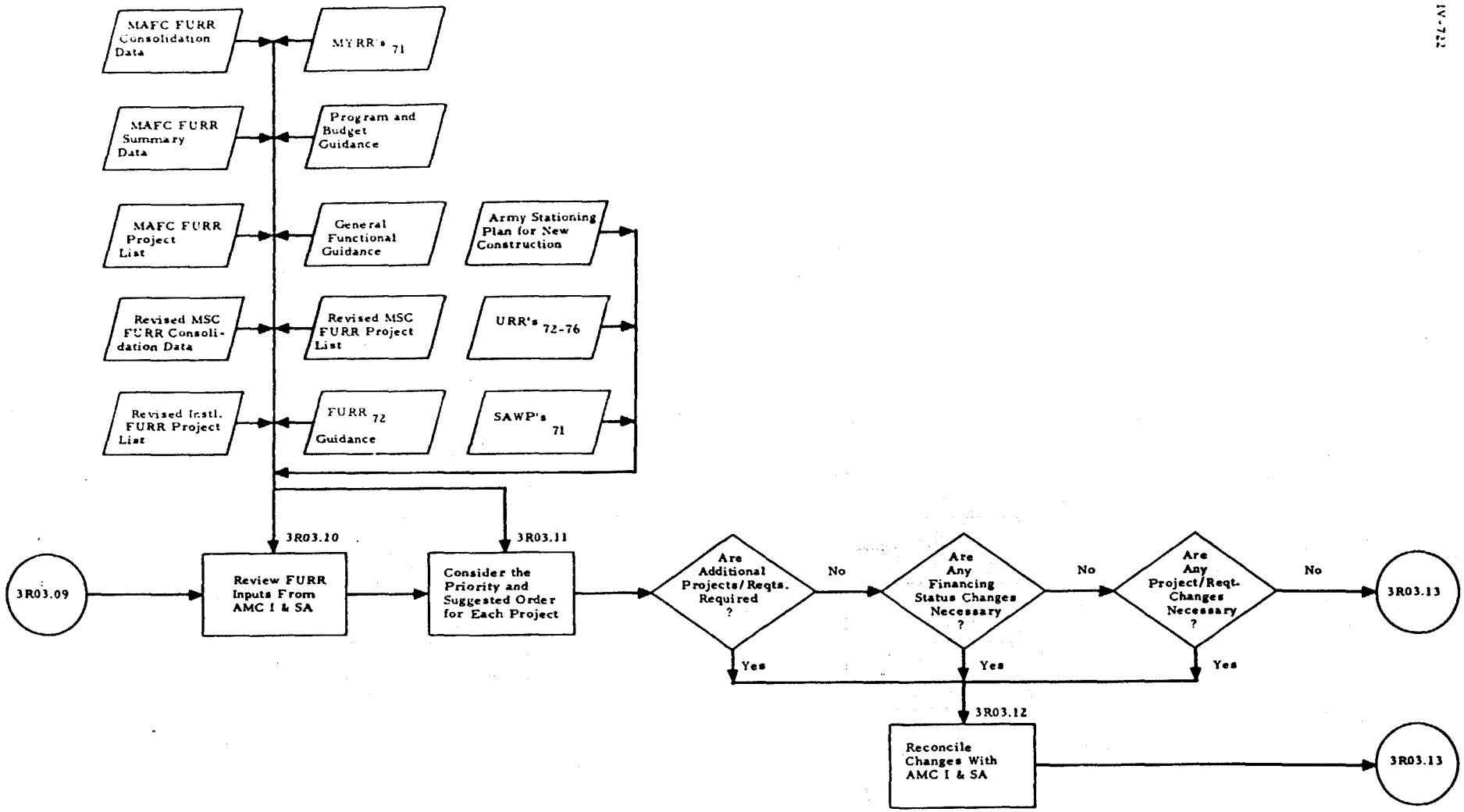

Note: Subscript denotes FY.
(Year of execution: FY72)

RPMA BUDGETING FUNCTION FOR AMC I & S
(MAFC PREPARATION OF THE FURR)

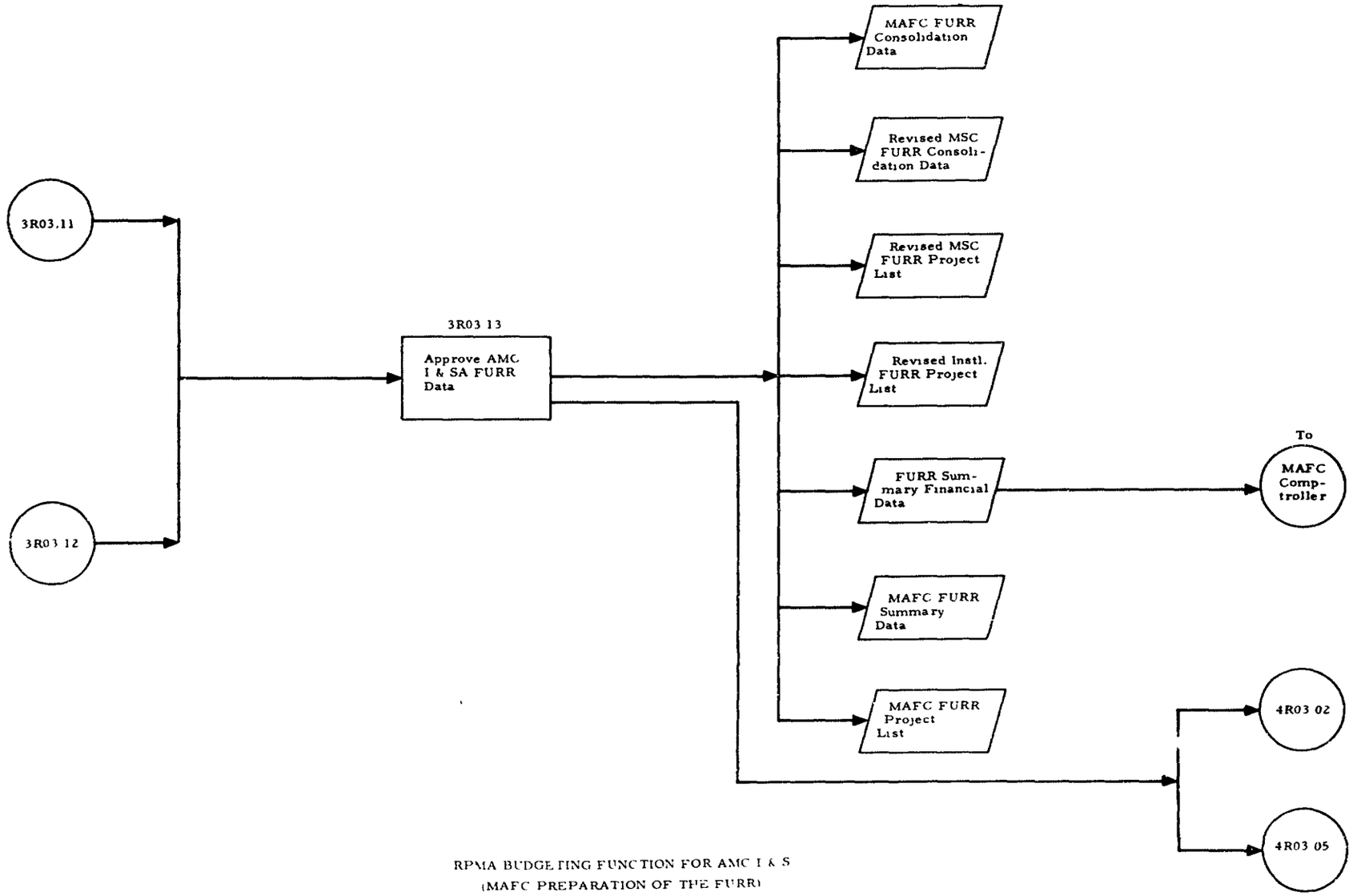

RPMA BUDGETING FUNCTION FOR AMC I & S
(MAFC PREPARATION OF THE FURR)

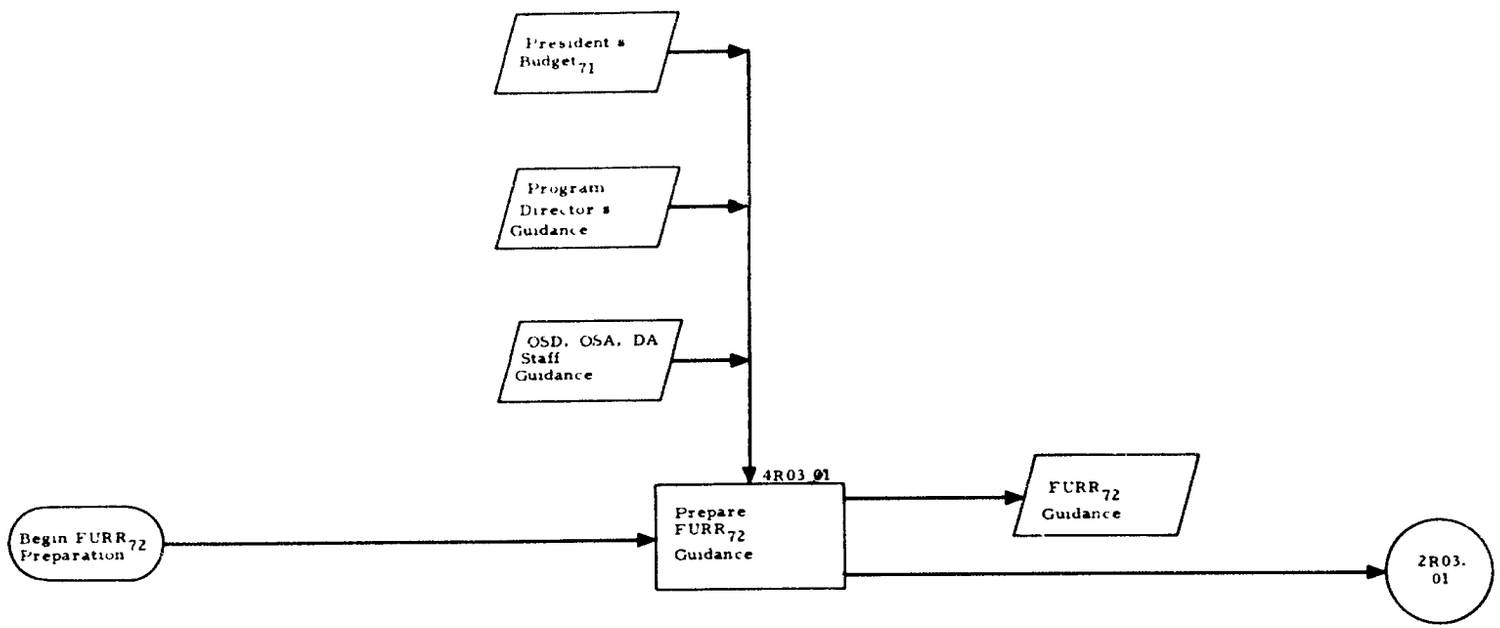

Note Subscript (e.g. URR$_{71}$) denotes FY. (Year of execution FY72)

RPMA BUDGETING FUNCTION FOR STRATCOM, ASA, OTSG, AND MTMTS
(RPMAO PROCESSING OF THE FURR)

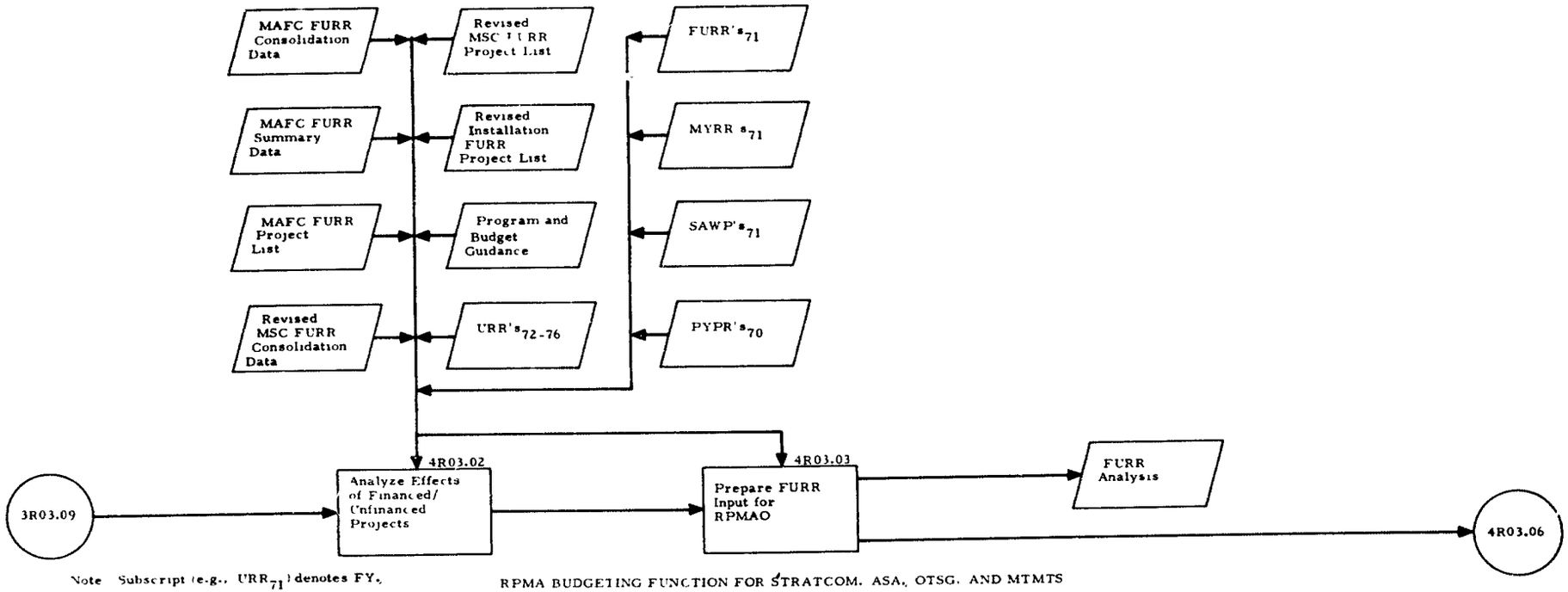

Note Subscript (e.g., URR_{71}) denotes FY, (Year of execution- FY72)

RPMA BUDGETING FUNCTION FOR STRATCOM, ASA, OTSG, AND MTMTS
(OCE PROCESSING OF THE FURR)

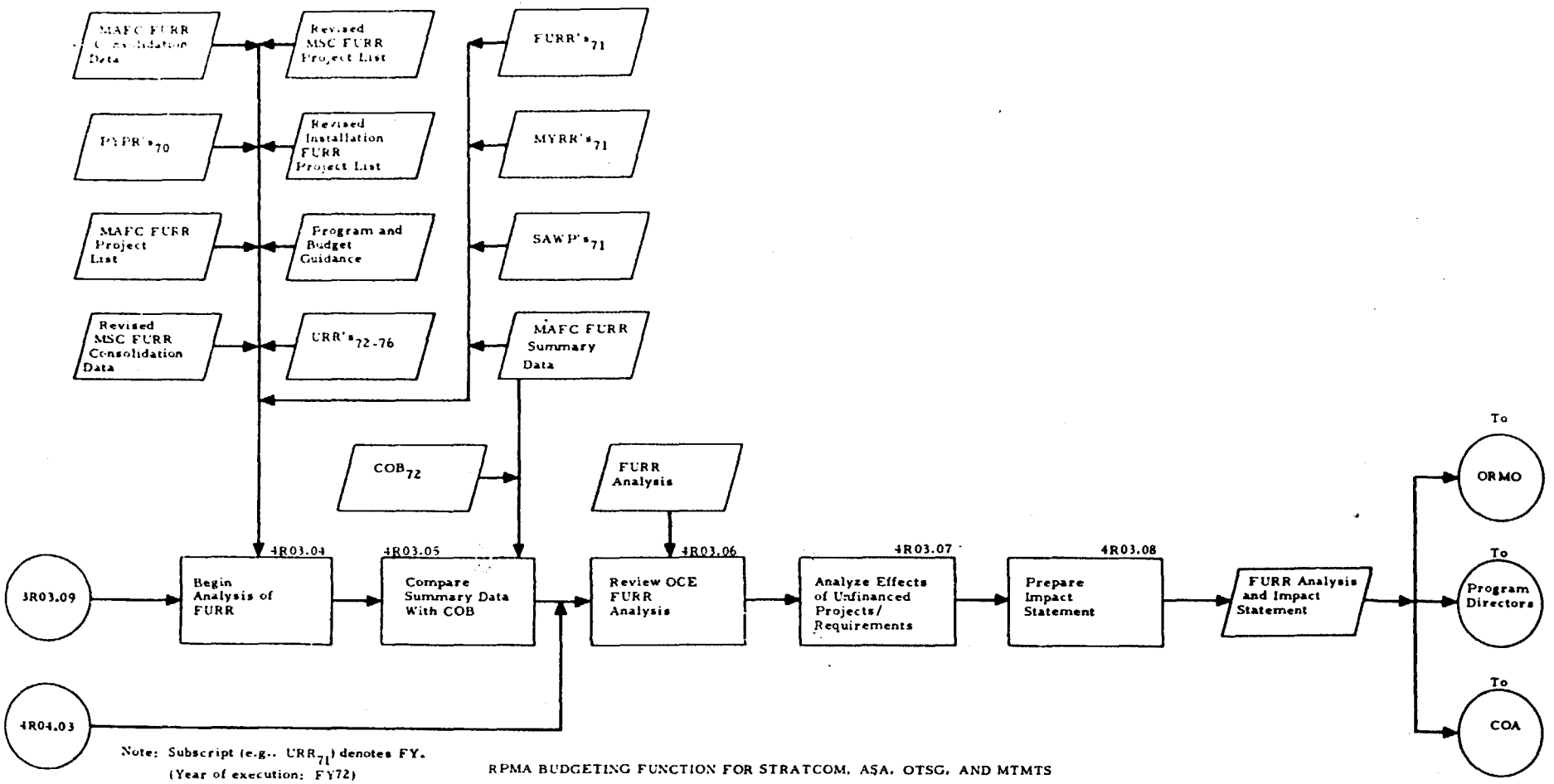

Note: Subscript (e.g., URR_{71}) denotes FY. (Year of execution: FY72)

RPMA BUDGETING FUNCTION FOR STRATCOM, ASA, OTSG, AND MTMTS
(RPMAO PROCESSING OF THE FURR)

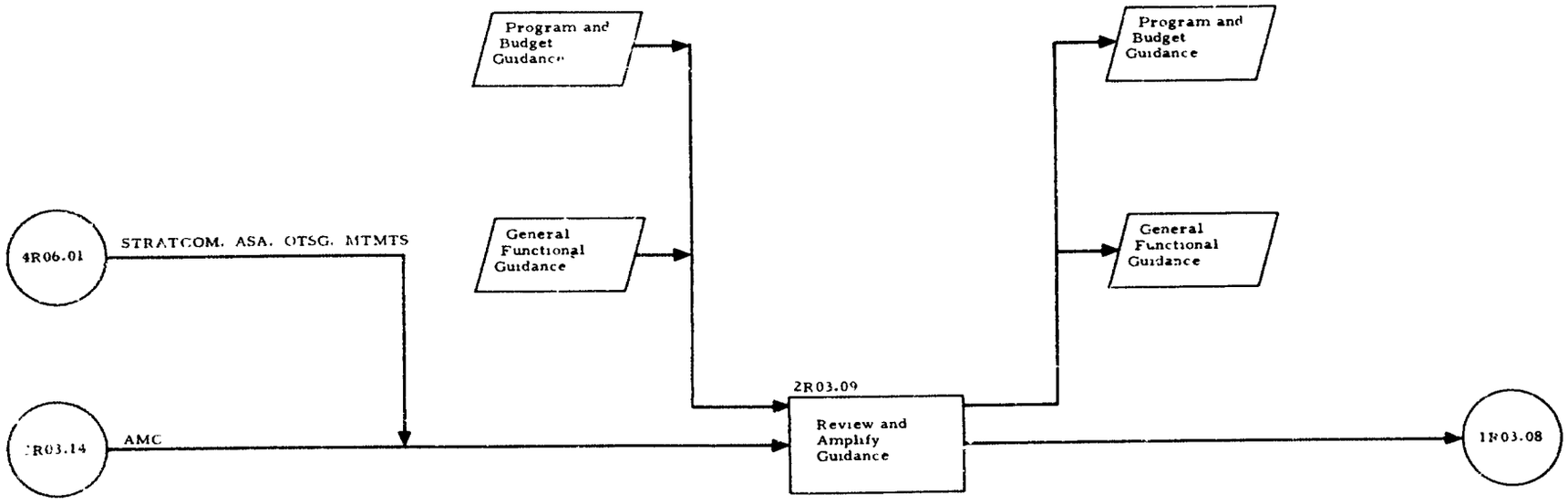

RPMS BUDGETING FUNCTION FOR STRATCOM, ASA, OTSG, MTMTS, AND AMC
(MSC PREPARATION OF THE SAWP)

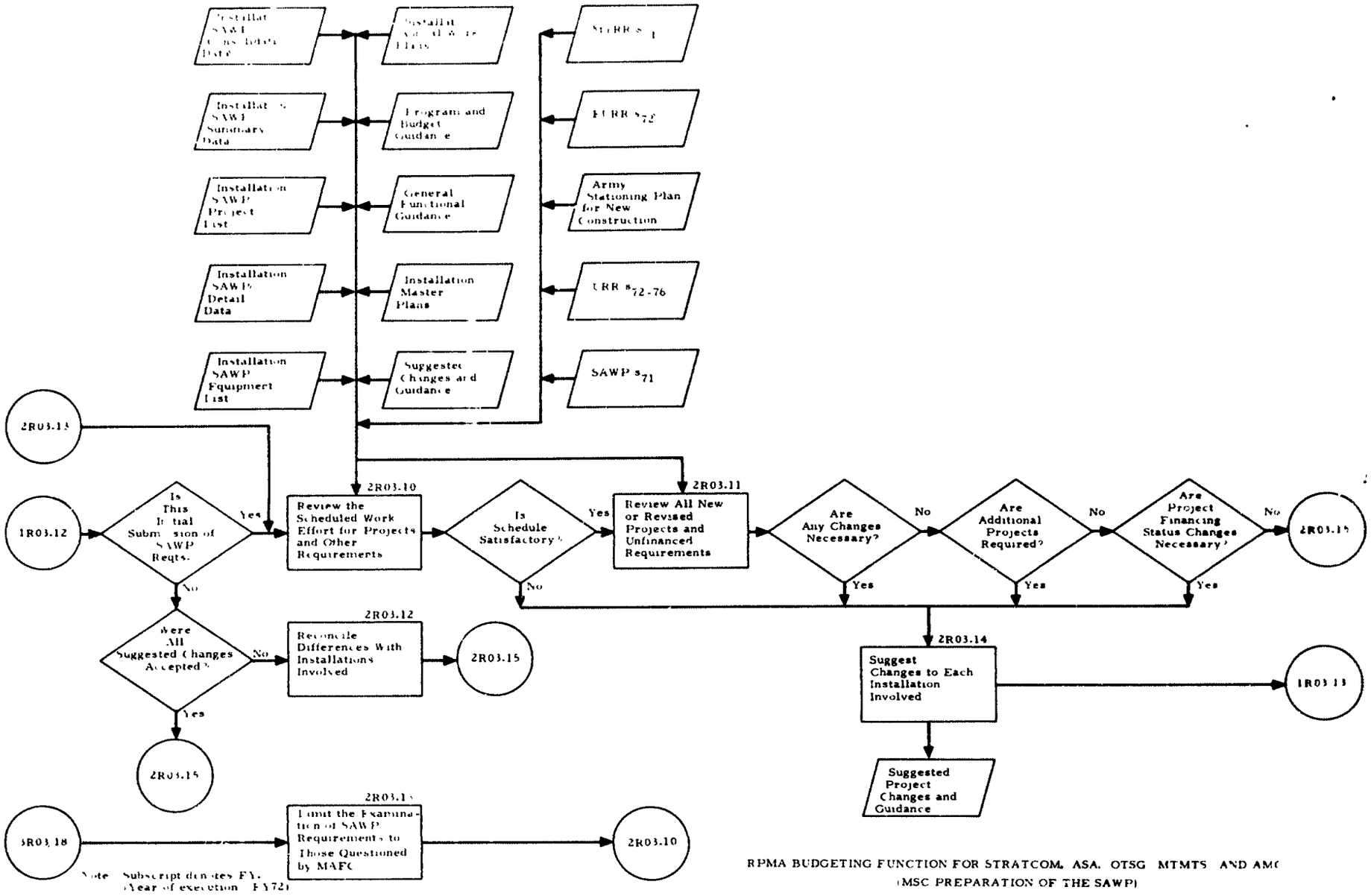

Note: Subscript denotes FY. (Year of execution = FY72)

RPMA BUDGETING FUNCTION FOR STRATCOM, ASA, OTSG, MTMTS, AND AMC
(MSC PREPARATION OF THE SAWP)

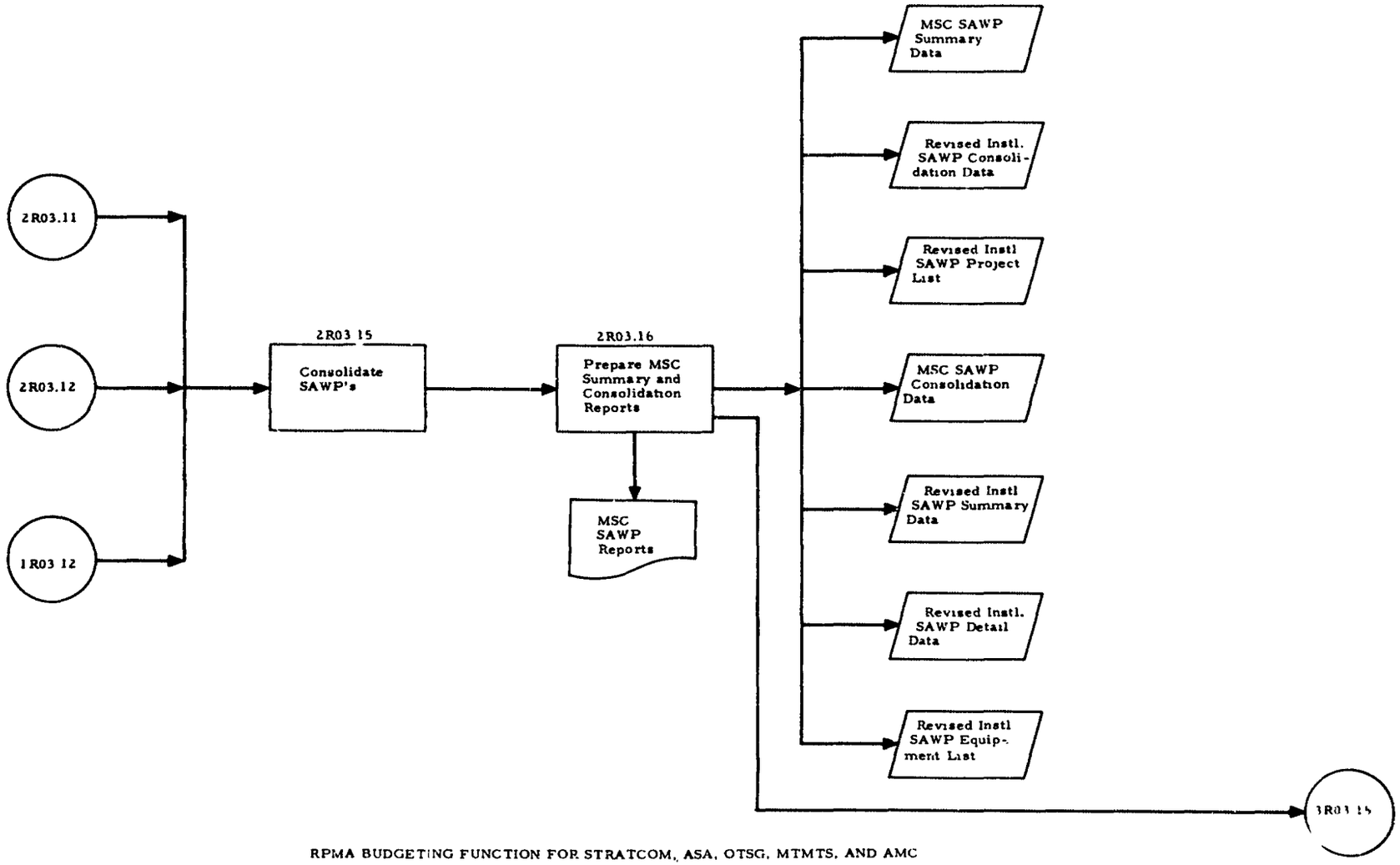

RPMA BUDGETING FUNCTION FOR STRATCOM, ASA, OTSG, MTMTS, AND AMC
(MSC PREPARATION OF THE SAWP)

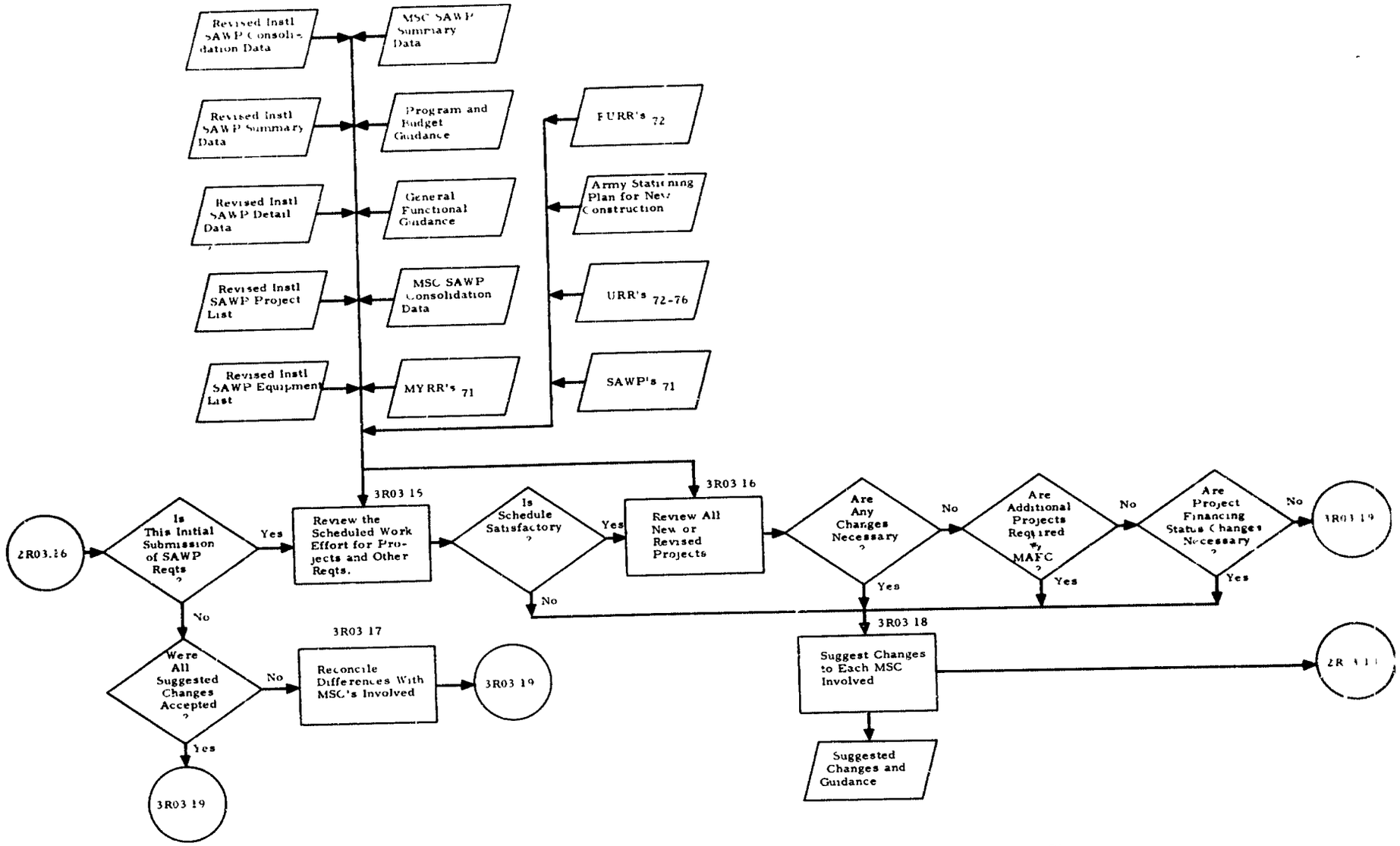

Note Subscript denotes FY (Year of execution FY72)

RPMA BUDGETING FUNCTION FOR OCE (STRATCOM, ASA, OTSG, MTMTS) AND AMC I & SA (MAFC PREPARATION OF THE SAWP)

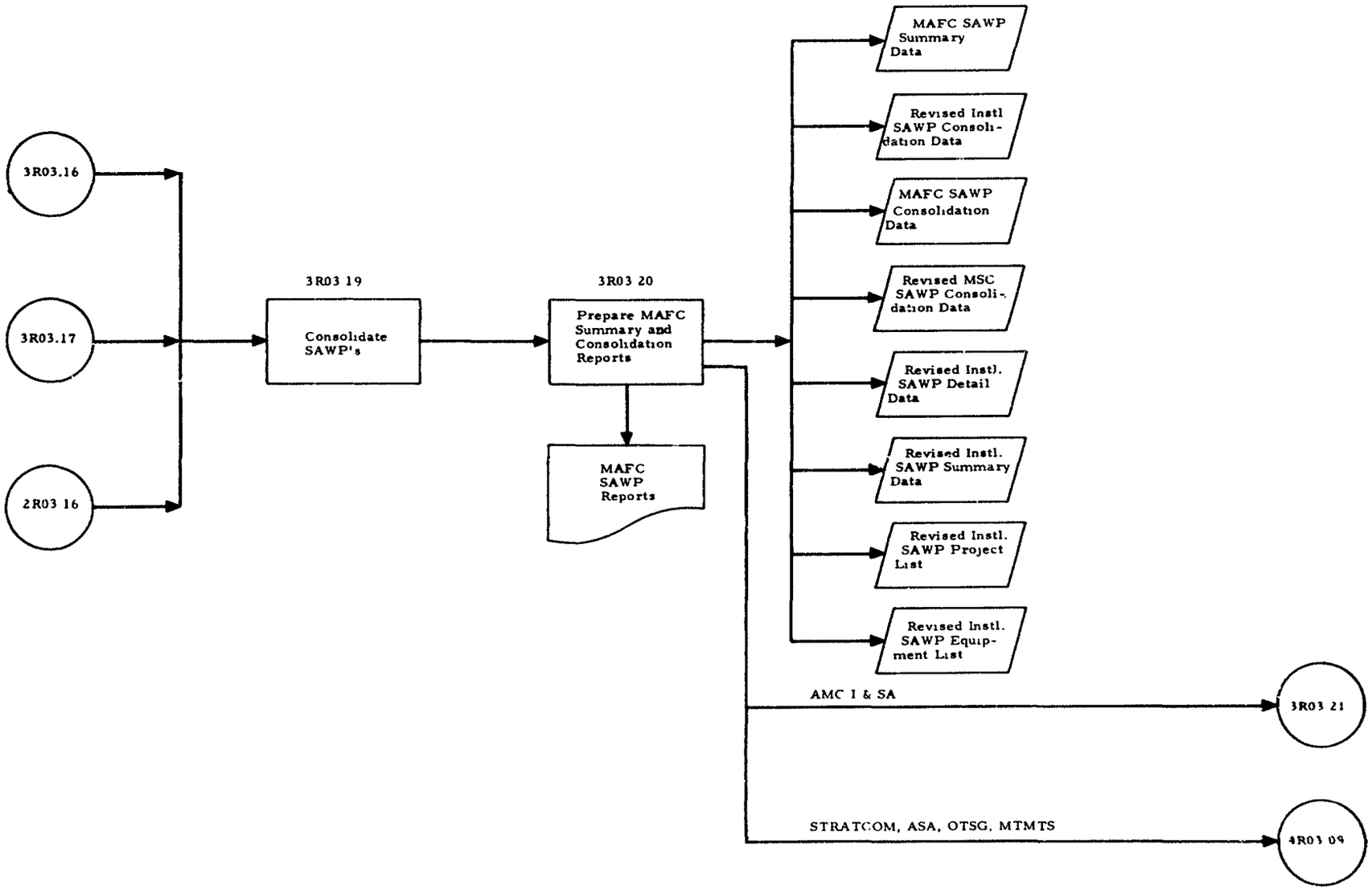

RPMA BUDGETING FUNCTION FOR OCE (STRATCOM, ASA, OTSG, MTMTS) AND AMC I & SA
(MAFC PREPARATION OF THE SAWP)

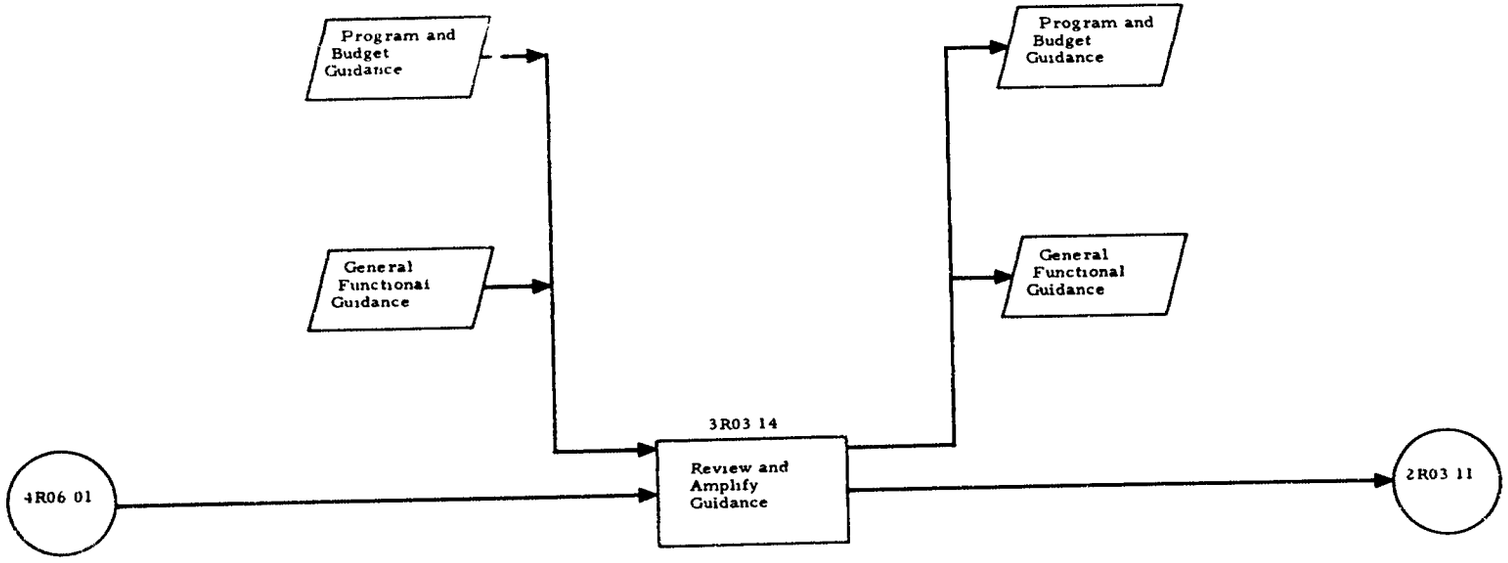

RPMA BUDGETING FUNCTION FOR AMC I & S
(MAFC PREPARATION OF THE SAWP)

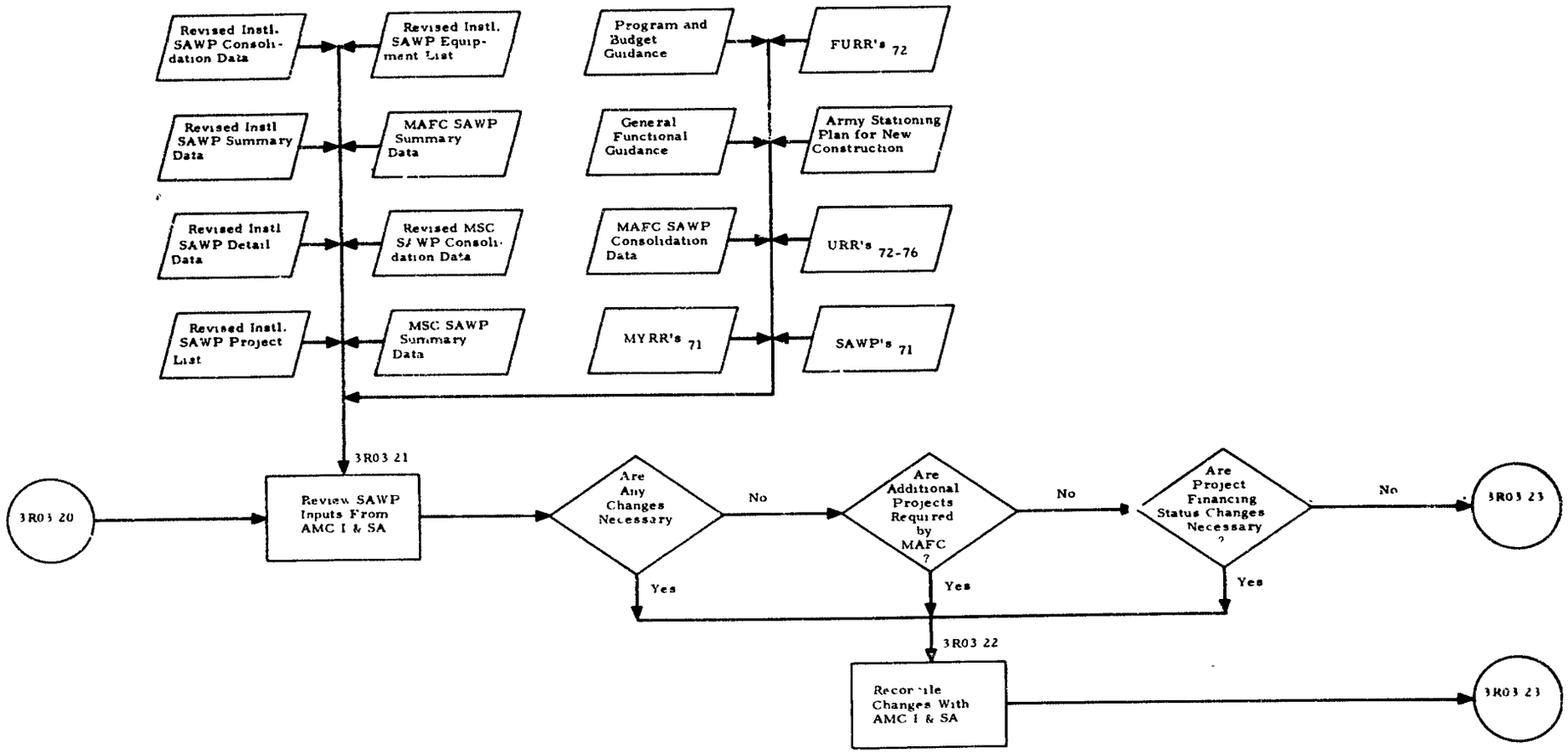

Note: Subscript denotes FY-
(Year of execution = FY72)

RPMA BUDGETING FUNCTION FOR AMC I & S
(MAFC PREPARATION OF THE SAWP)

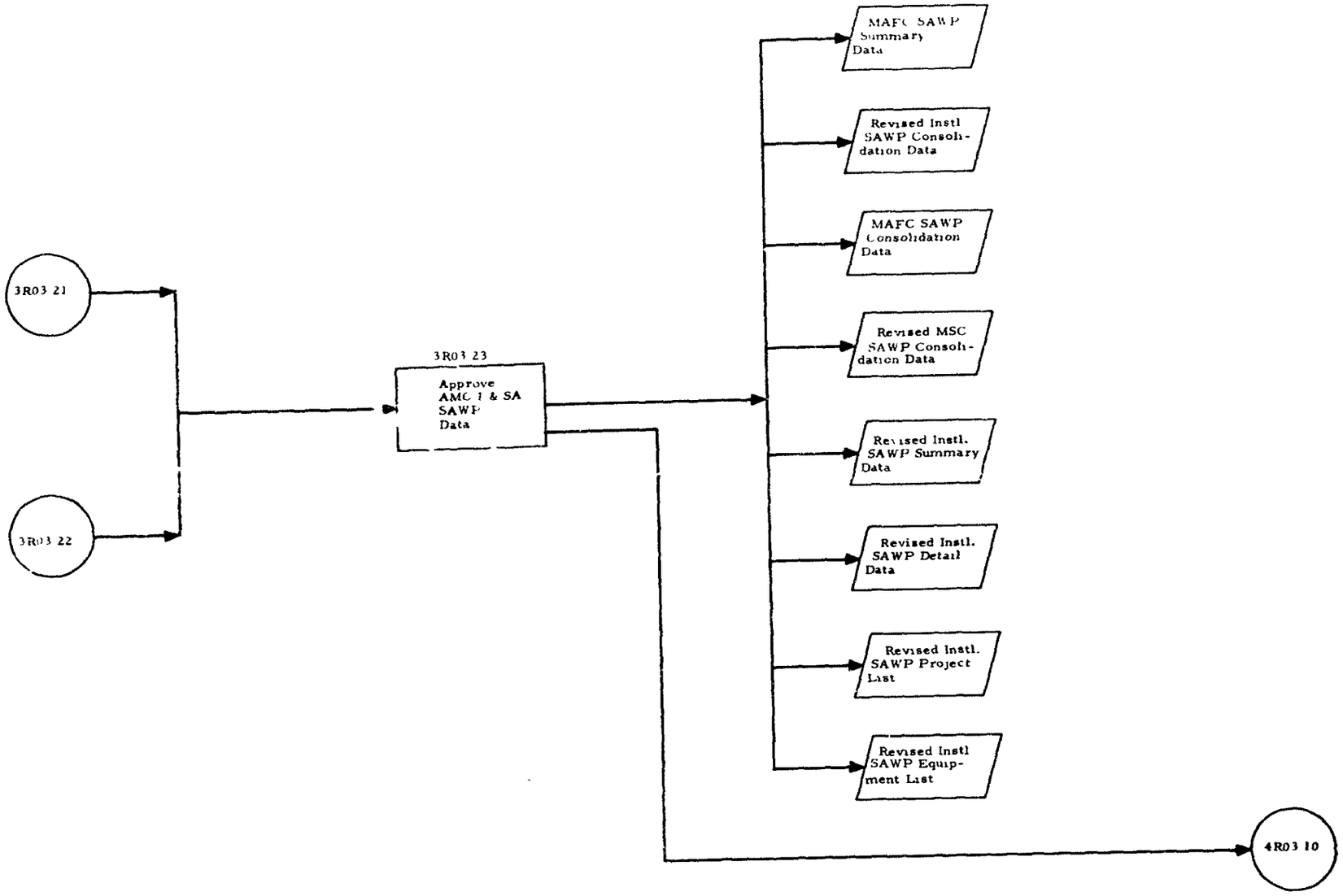

RPMA BUDGETING FUNCTION FOR AMC I & S
(MAFC PREPARATION OF THE SAWP)

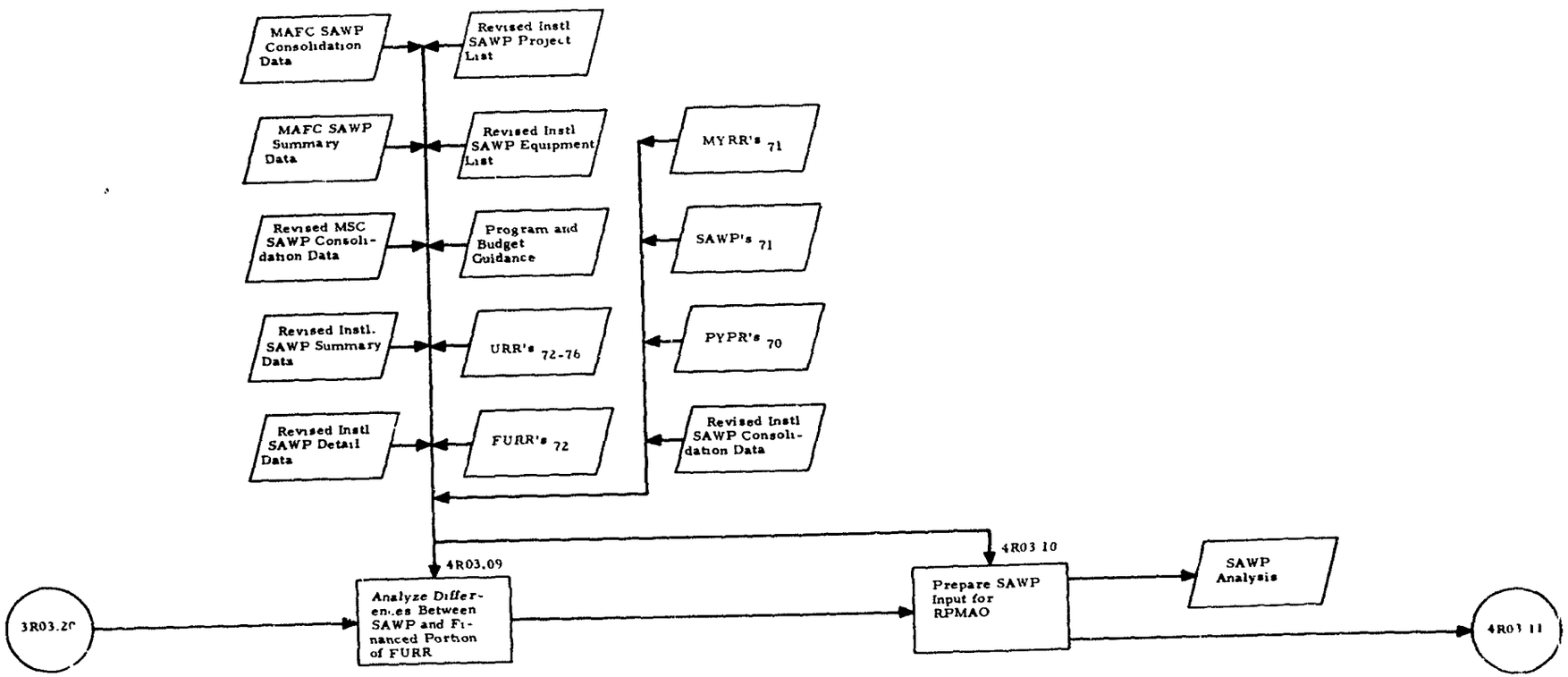

Note: Subscript (e.g., URR_{71}) denotes FY.
(Year of execution: FY72)

RPMA BUDGETING FUNCTION FOR STRATCOM, ASA, OTSG, AND MTMTS

(OCE PROCESSING OF THE SAWP)

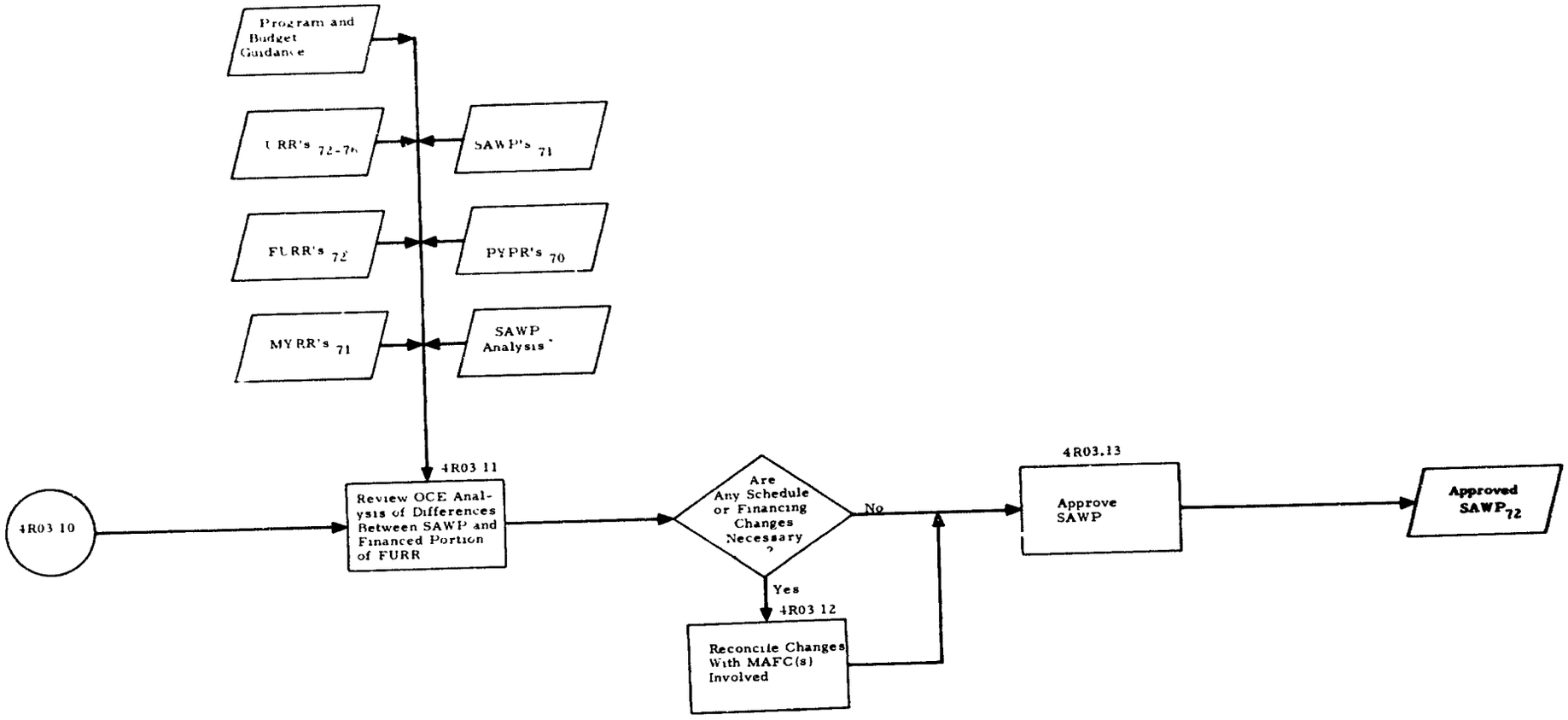

Note: Subscript (e.g., URR_{71}) denotes FY. (Year of execution. FY72)

RPMA BUDGETING FUNCTION FOR STRATCOM, ASA, OTSG, AND MTMTS
(RPMAO PROCESSING OF THE SAWP)

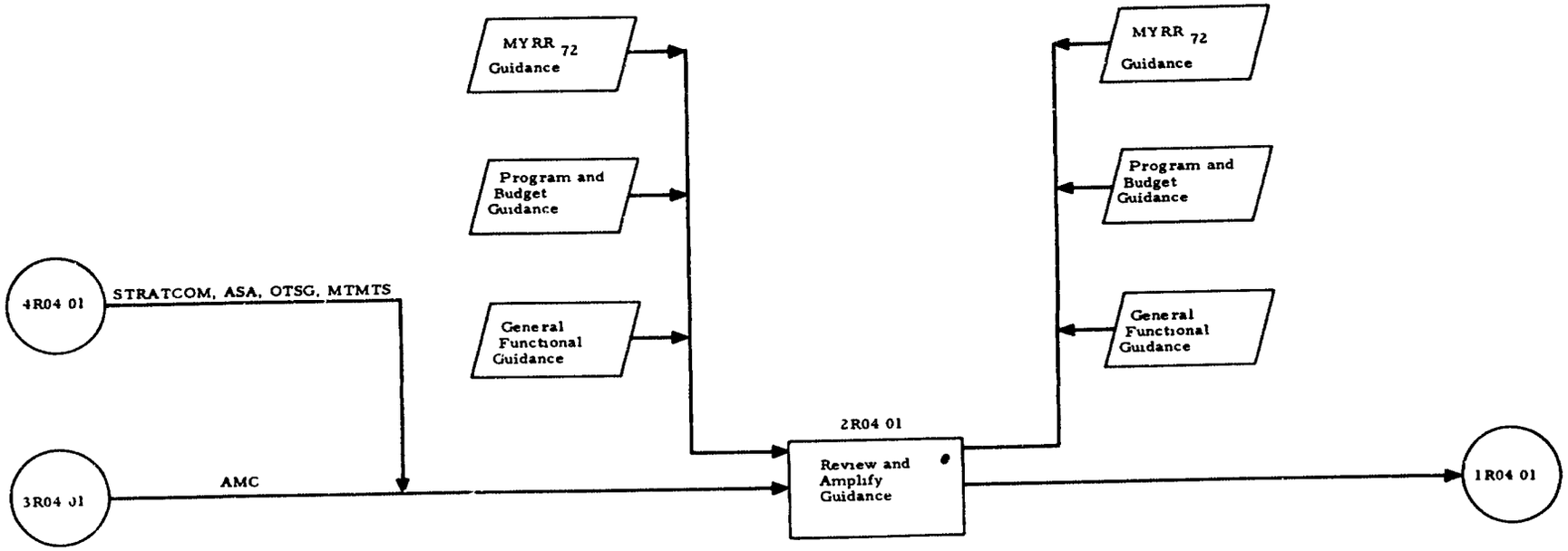

Note: Subscript denotes FY
(Year of execution: FY72)

RPMA EXECUTION FUNCTION FOR STRATCOM, ASA, OTSG, MTMTS, AND AMC
(MSC PREPARATION OF THE MYRR)

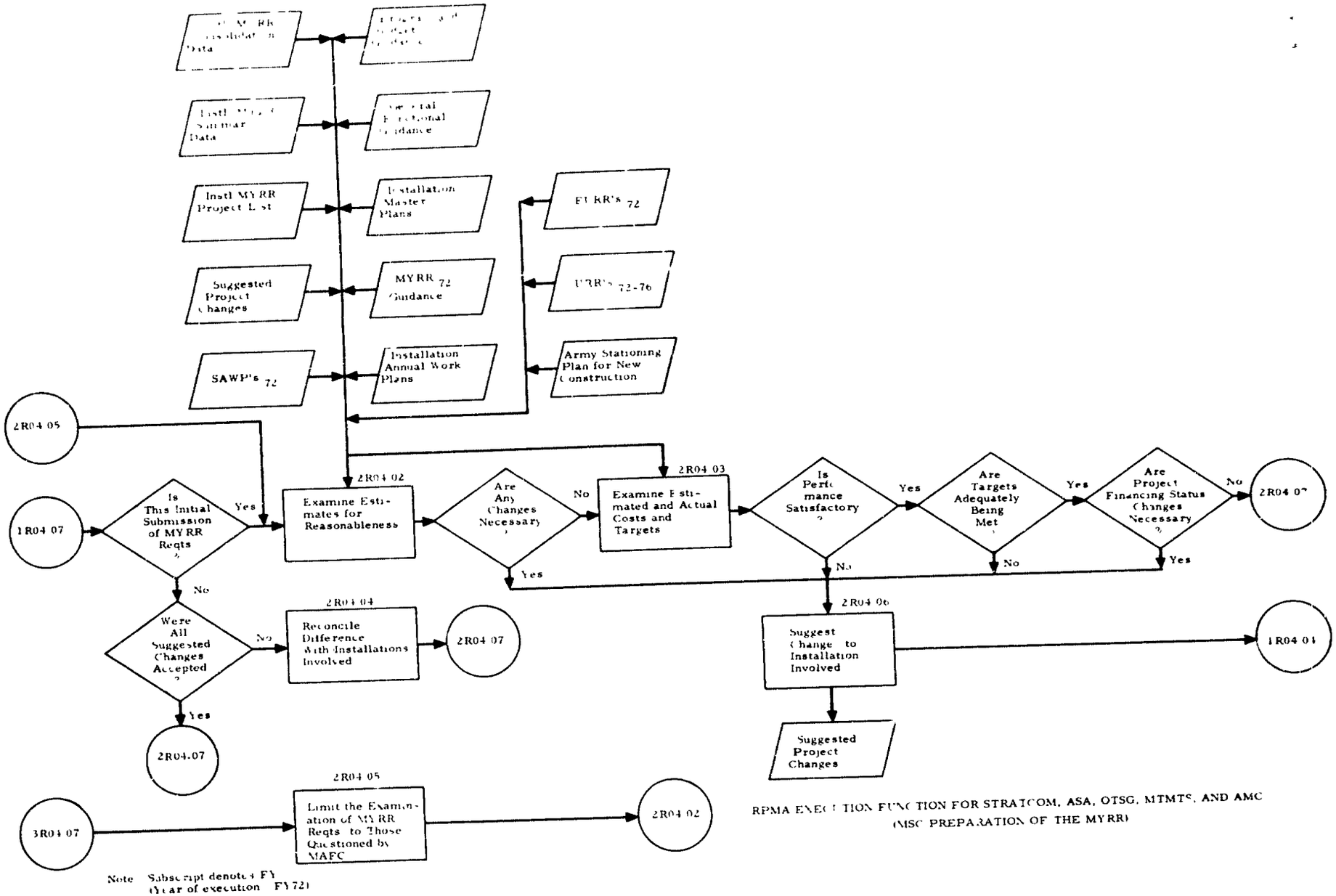

Note Subscript denotes FY (Year of execution FY72)

RPMA EXECUTION FUNCTION FOR STRATCOM, ASA, OTSG, MTMTS, AND AMC (MSC PREPARATION OF THE MYRR)

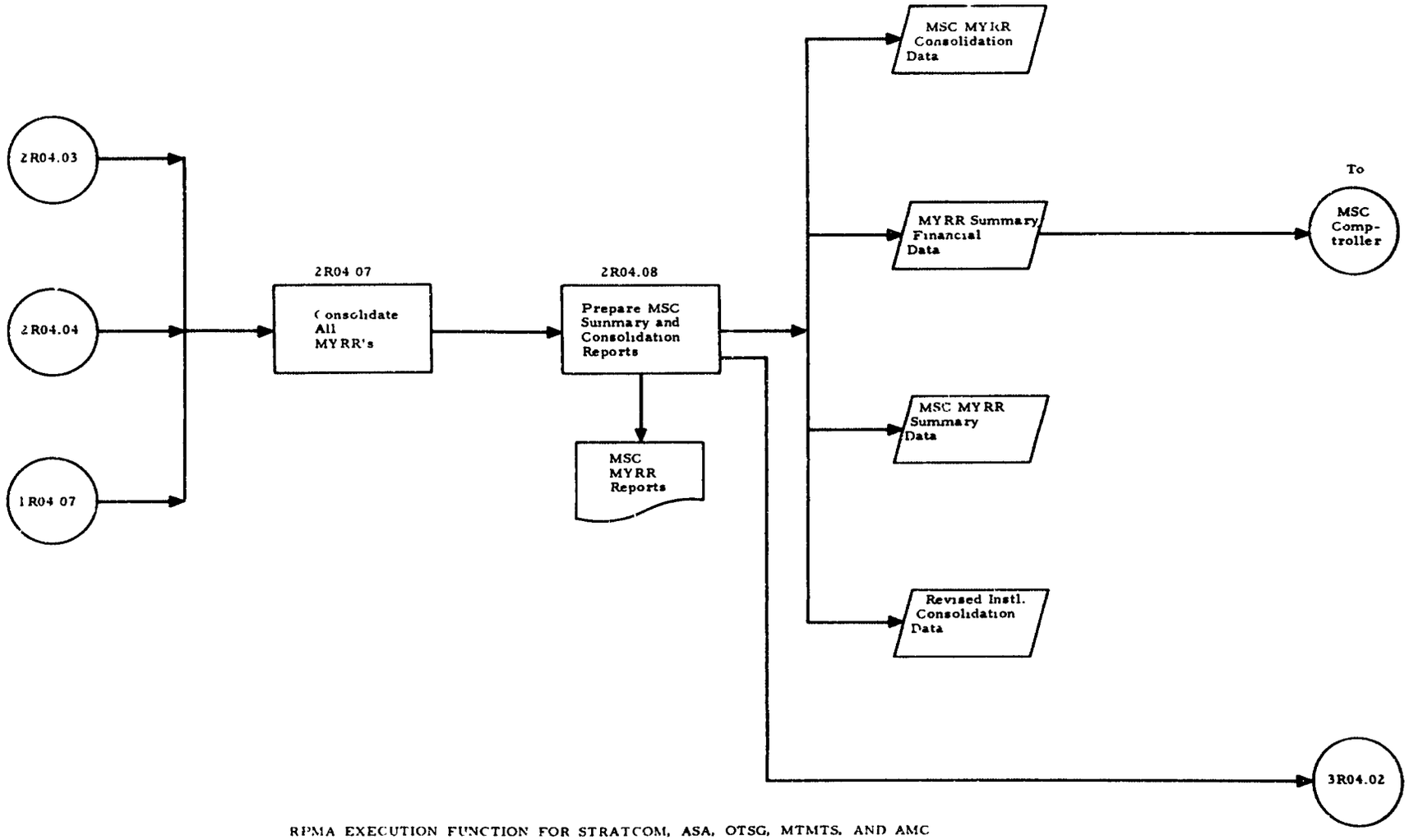

RPMA EXECUTION FUNCTION FOR STRATCOM, ASA, OTSG, MTMTS, AND AMC
(MSC PREPARATION OF THE MYRR)

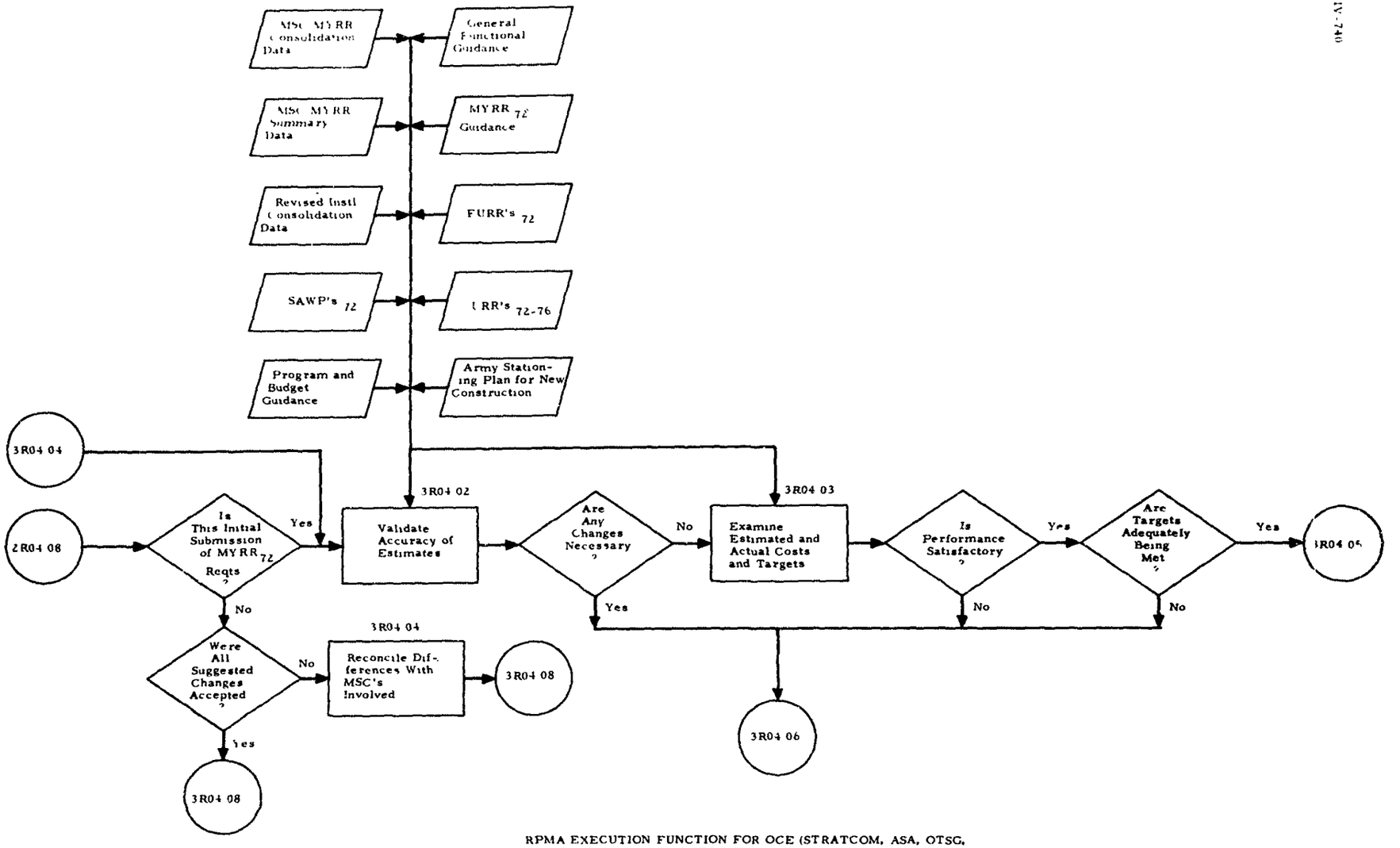

Note Subscript denotes FY (Year of execution. FY72)

RPMA EXECUTION FUNCTION FOR OCE (STRATCOM, ASA, OTSG, MTMTS) AND AMC I&SA

(MAFC PREPARATION OF THE MYRR)

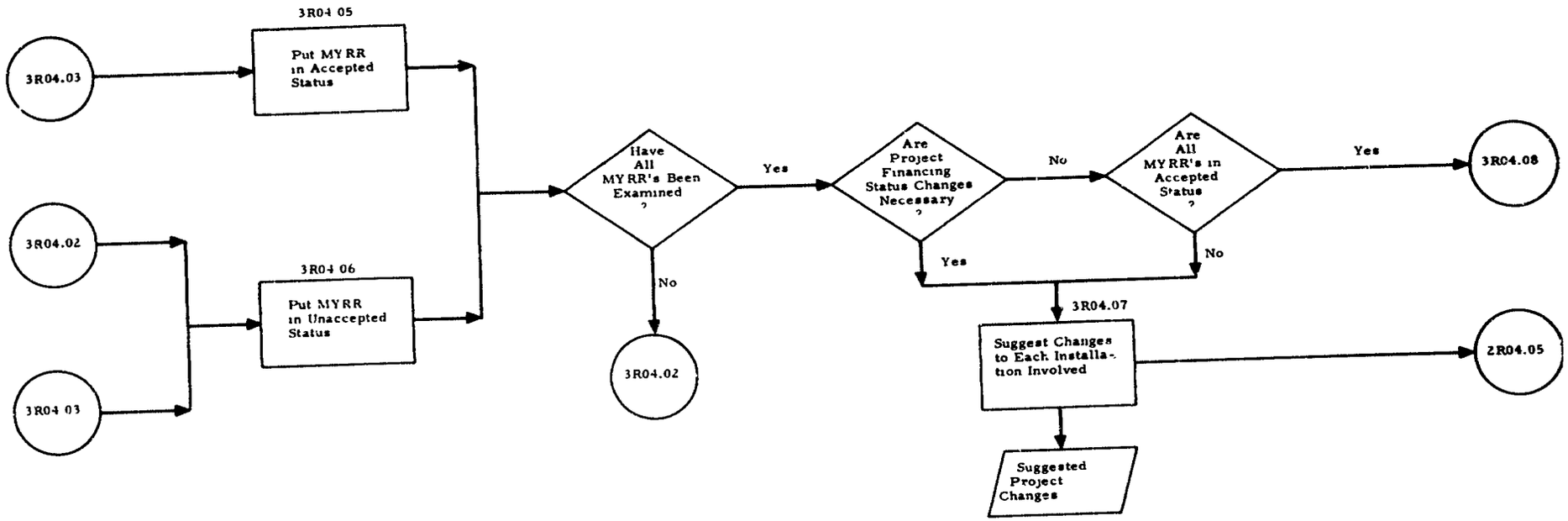

RPMA EXECUTION FUNCTION FOR OCE (STRATCOM, ASA, OTSG, AND MTMTS) AND AMC I & SA
(MAFC PREPARATION OF THE MYRR)

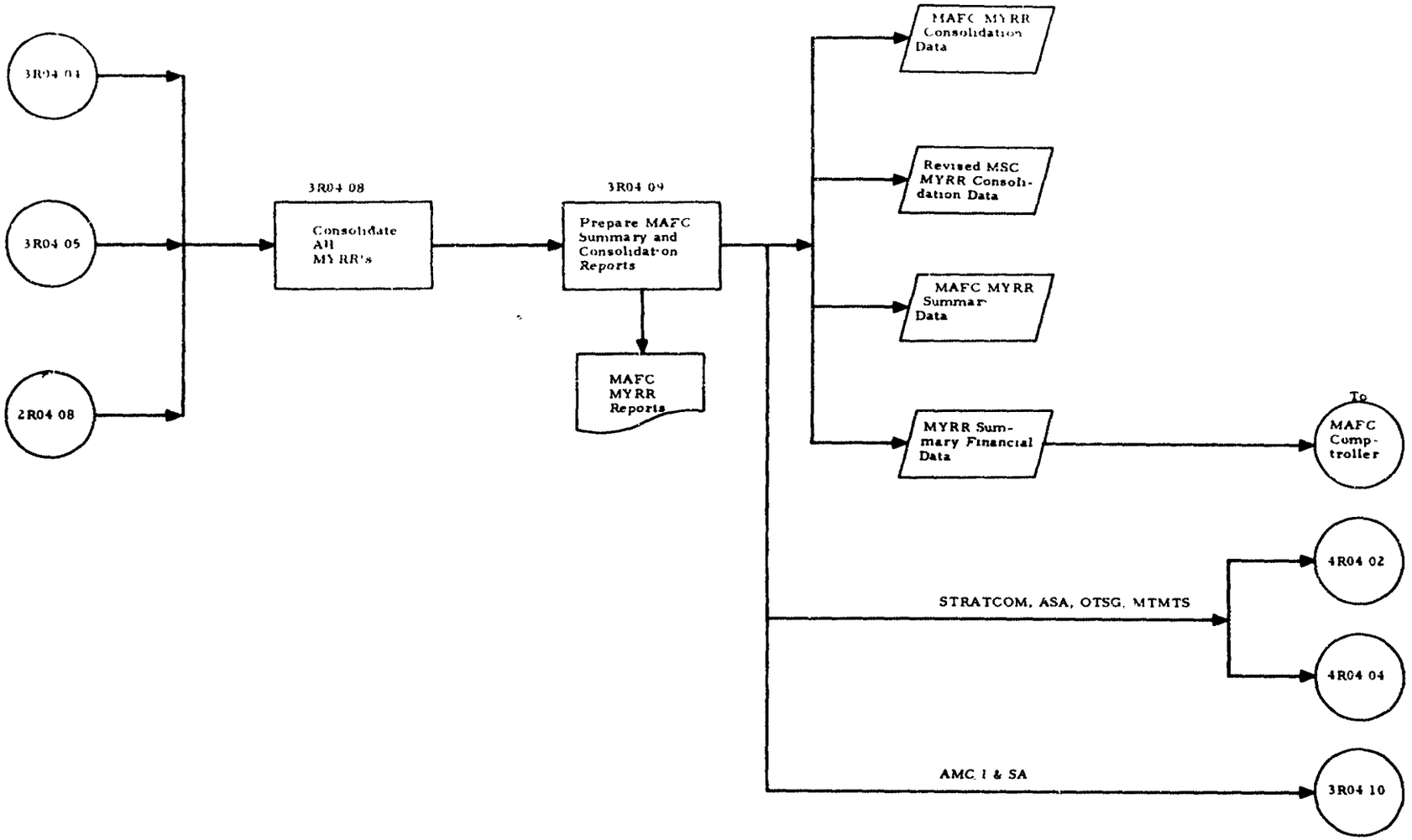

RPMA EXECUTION FUNCTION FOR OCE (STRATCOM, ASA, OTSG, MTMTS) AND AMC I&SA

(MAFC PREPARATION OF THE MYRR)

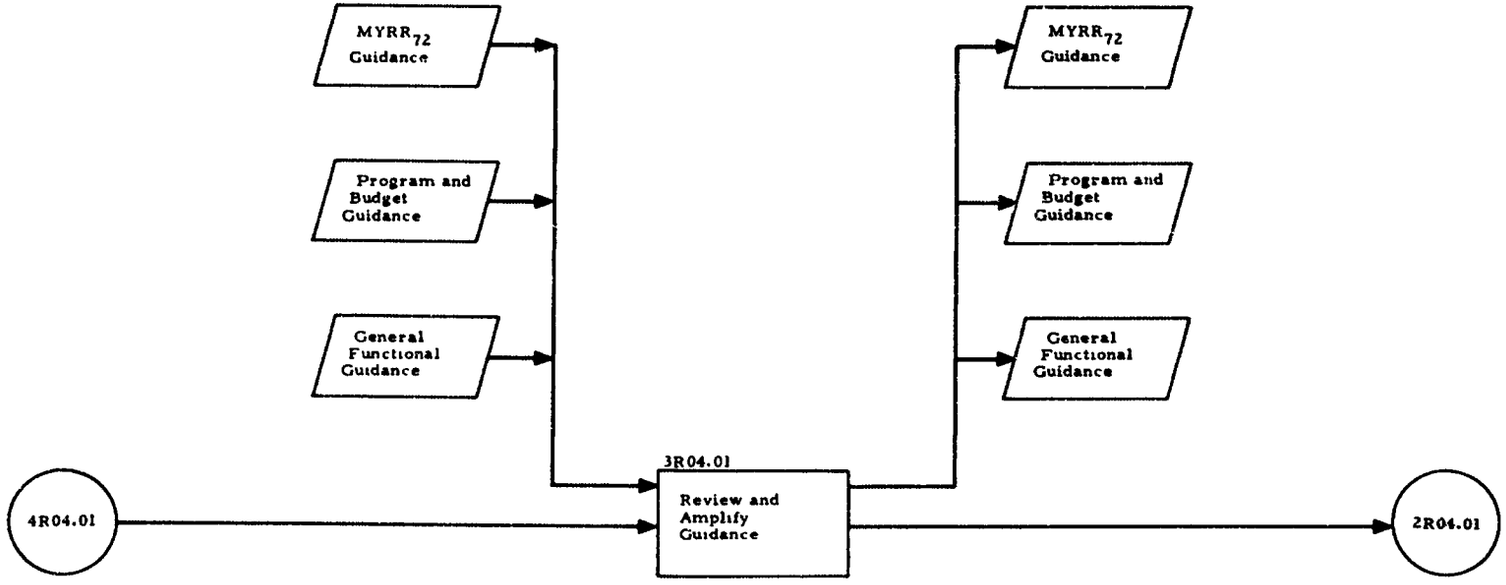

Note: Subscript denotes FY.
(Year of execution: FY72)

RPMA EXECUTION FUNCTION FOR AMC I & S
(MAFC PREPARATION OF THE MYRR)

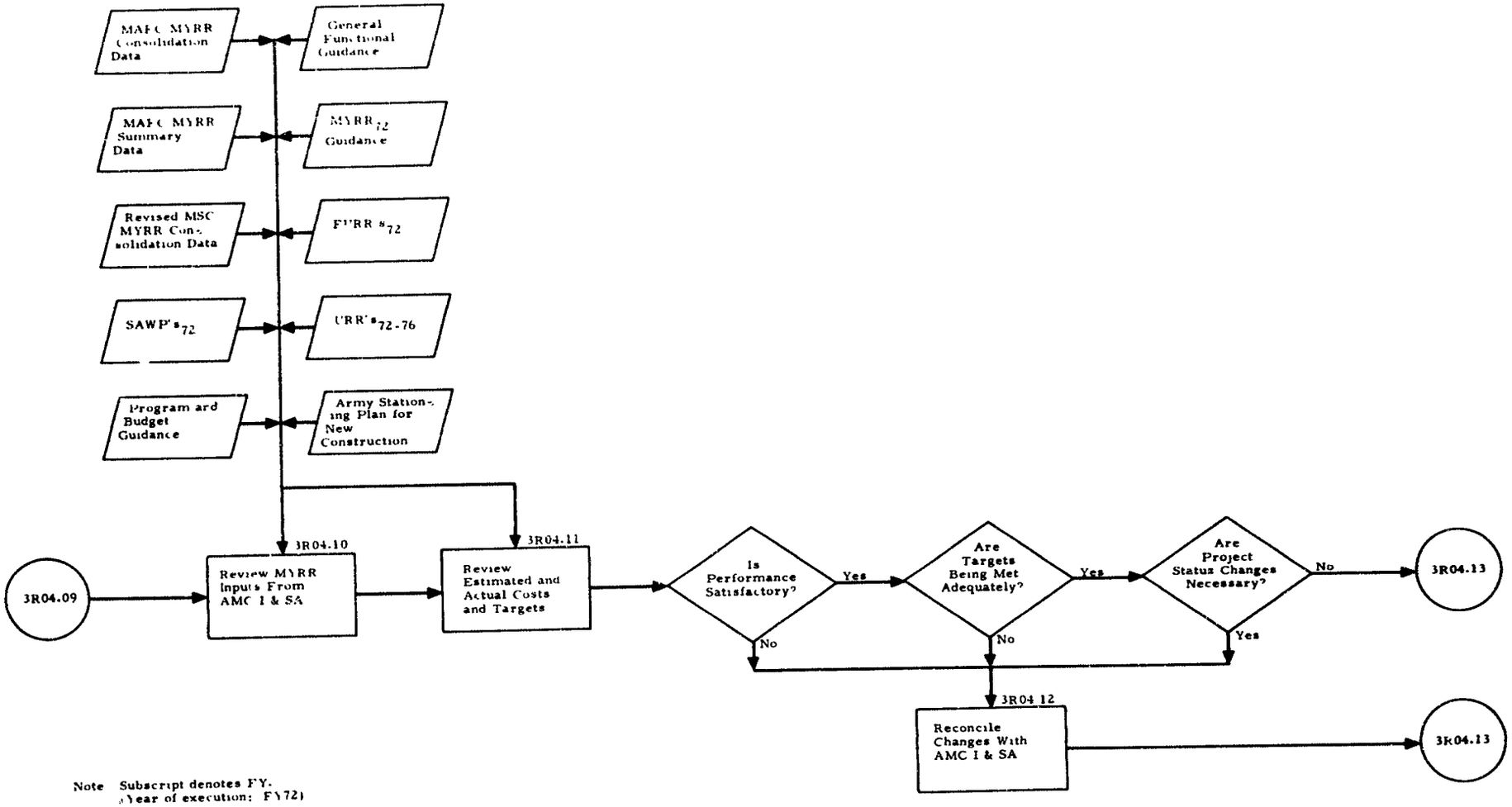

Note Subscript denotes FY. (Year of execution: FY72)

RPMA EXECUTION FUNCTION FOR AMC I&S
(MAFC PREPARATION OF THE MYRR)

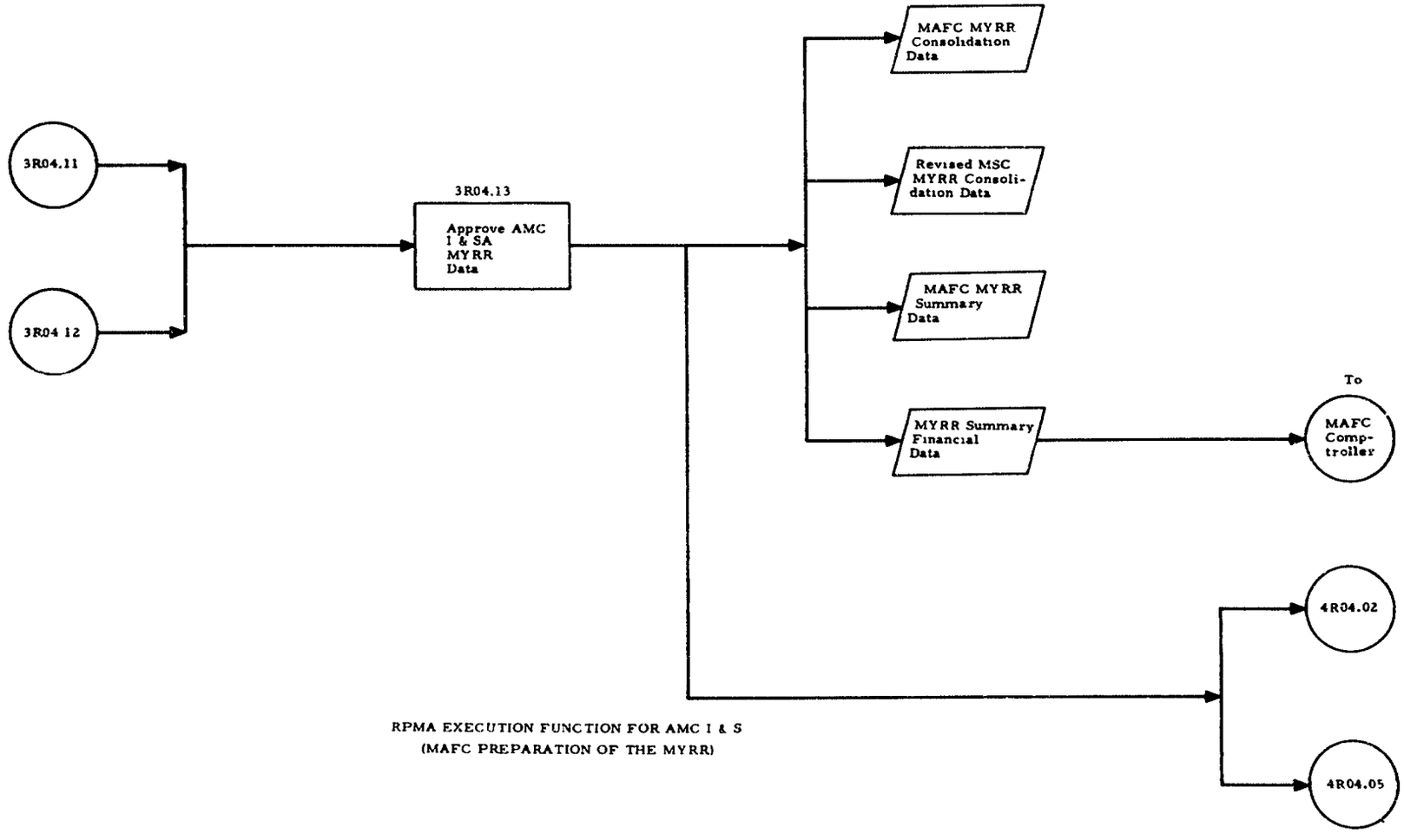

RPMA EXECUTION FUNCTION FOR AMC I & S
(MAFC PREPARATION OF THE MYRR)

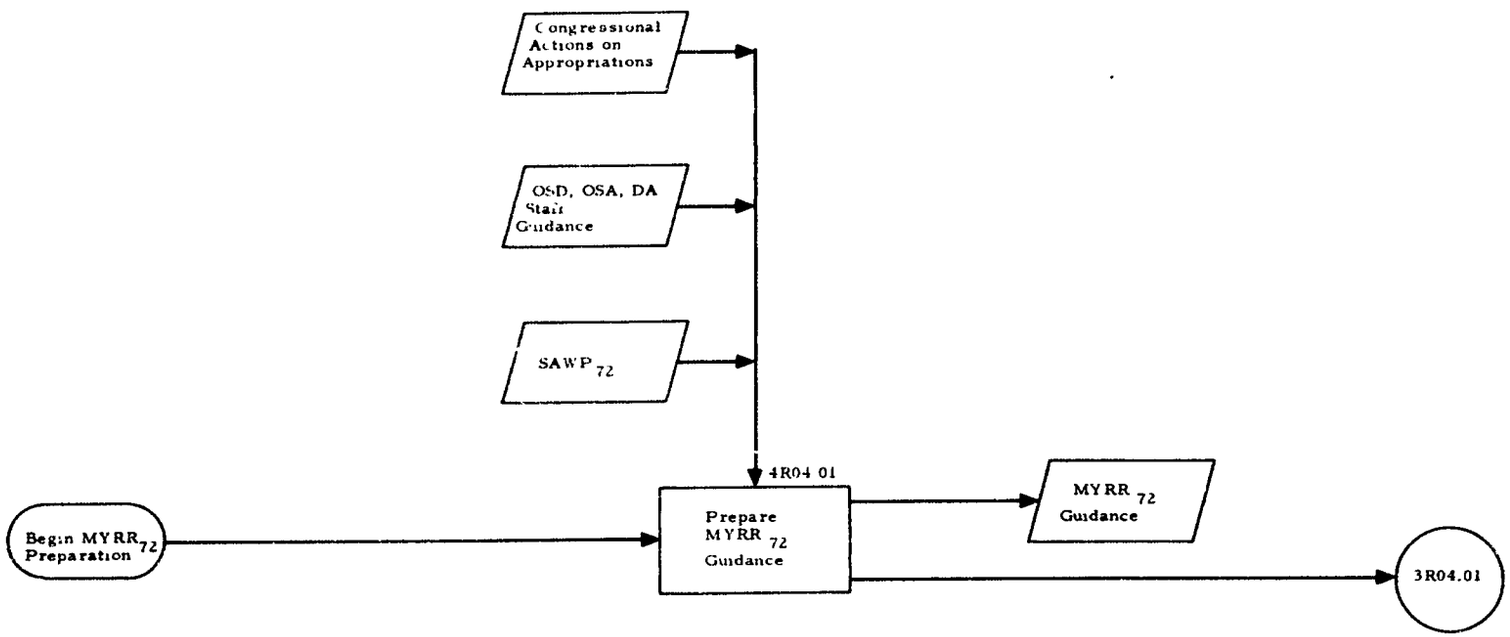

RPMA EXECUTION FUNCTION FOR STRATCOM, ASA, OTSG, AND MTMTS
(RPMAO PROCESSING OF THE MYRR)

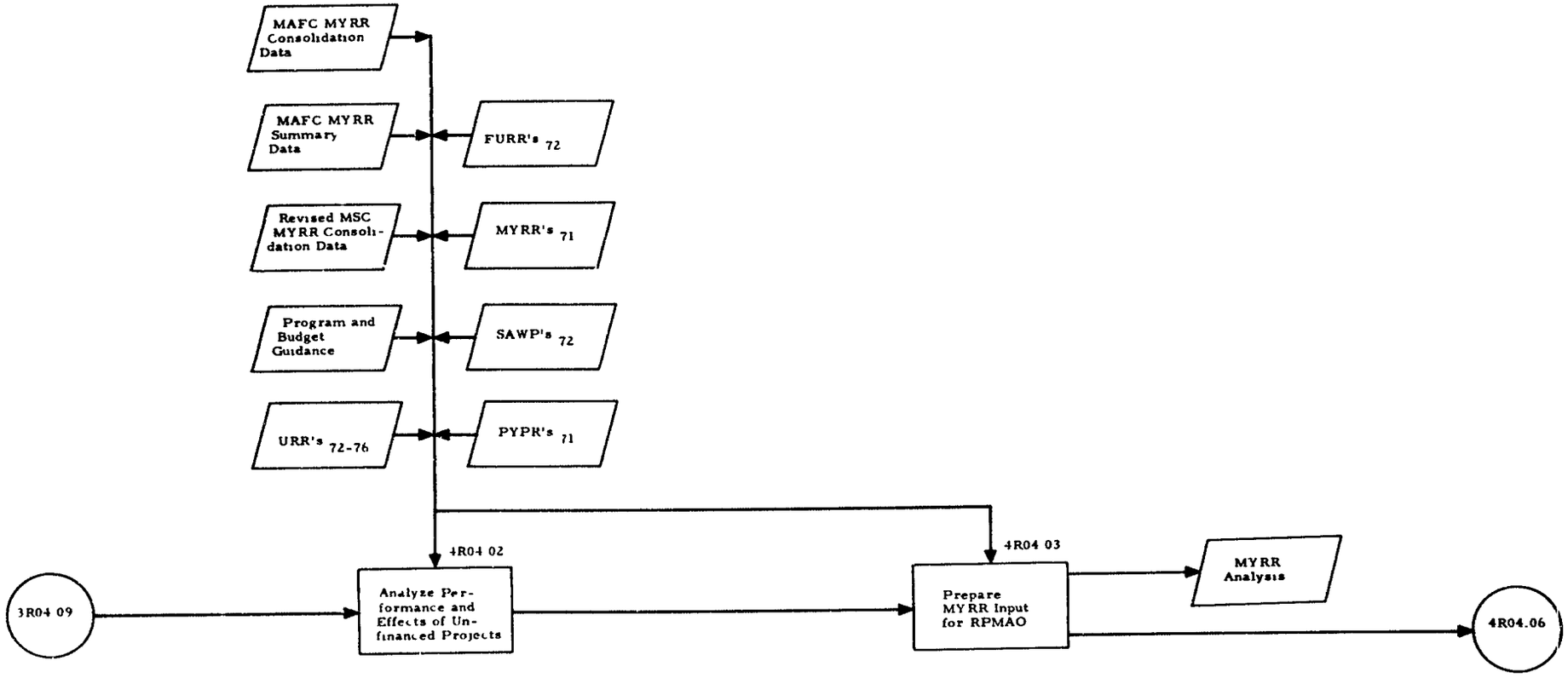

Note Subscript (e.g., URR_{71}) denotes FY. (Year of execution FY72)

RPMA EXECUTION FUNCTION FOR STRATCOM, ASA, OTSG, AND MTMTS
(OCE PROCESSING OF THE MYRR)

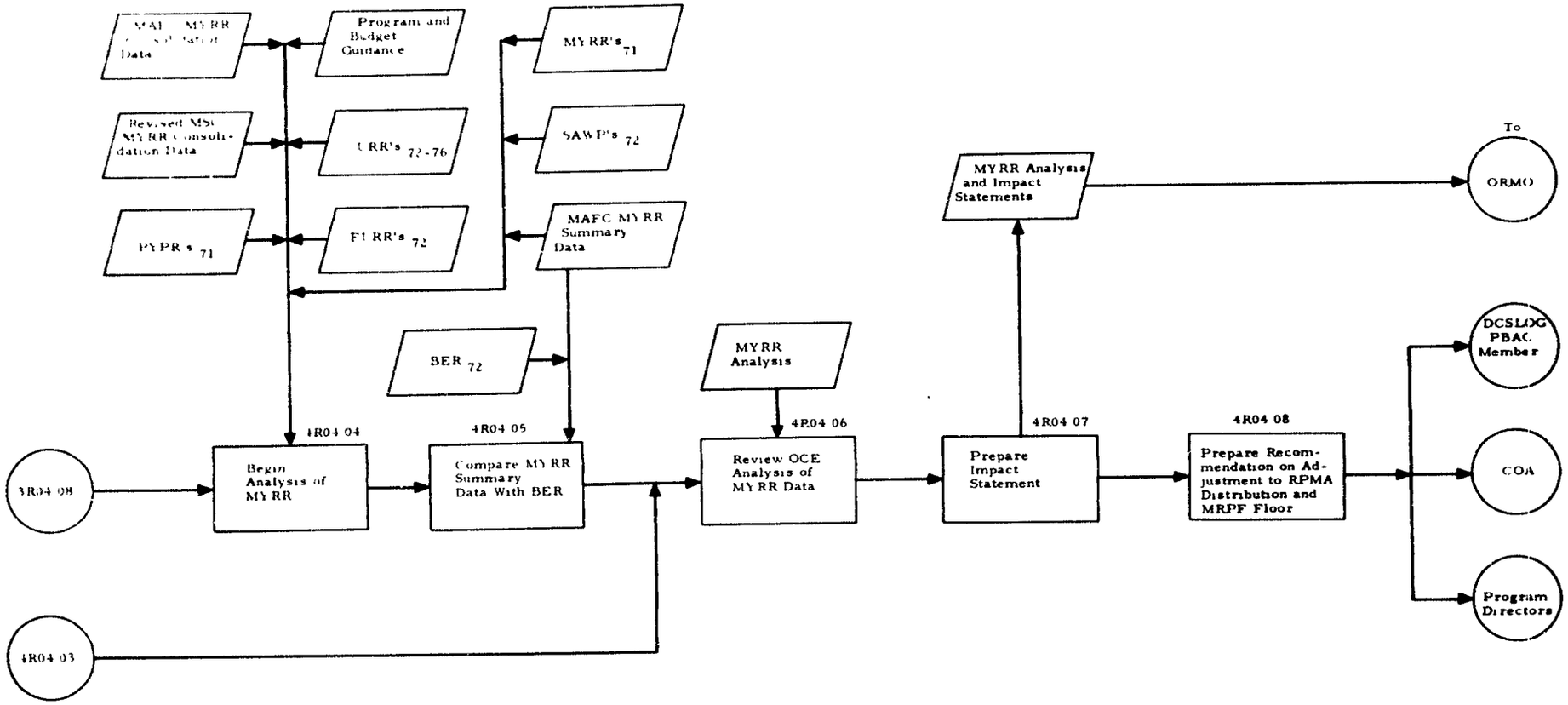

Note Subscript (e.g., URR_{71}) denotes FY (Year of execution FY72)

RPMA EXECUTION FUNCTION FOR STRATCOM, ASA OTSG, AND MTMTS
(RPMAO PROCESSING OF THE MYRR)

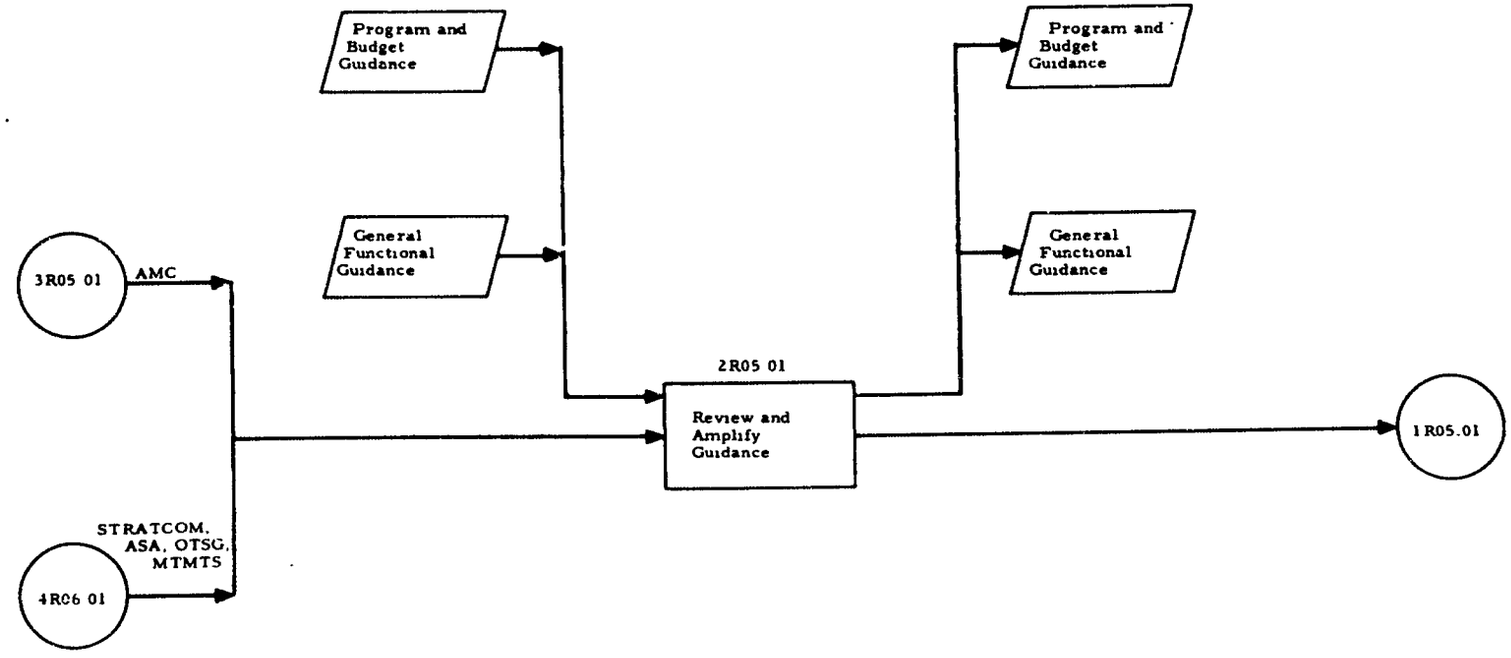

RPMA REVIEW FUNCTION FOR STRATCOM, ASA, OTSG, MTMTS, AND AMC
(MSC PREPARATION OF THE PYPR)

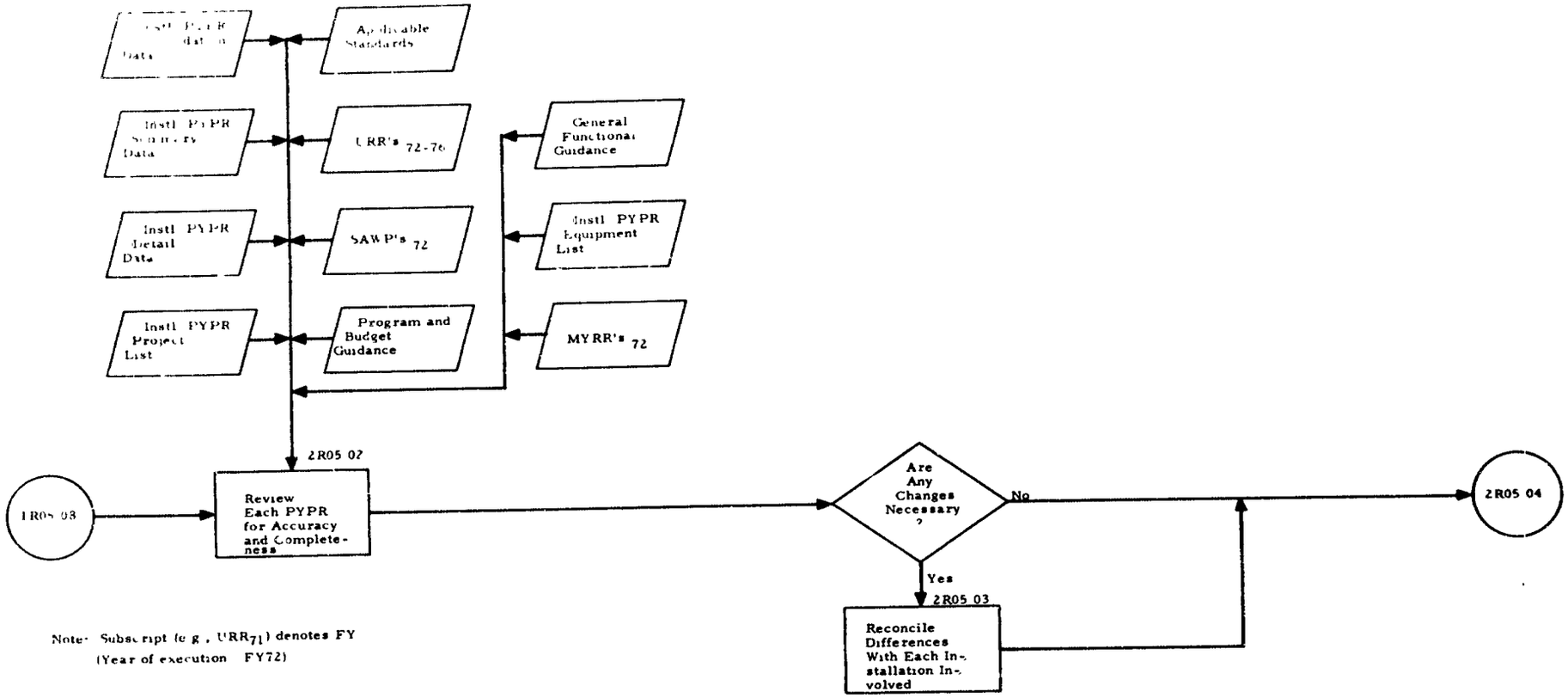

Note: Subscript (e.g., URR_{71}) denotes FY (Year of execution FY72)

RPMA REVIEW FUNCTION FOR STRATCOM, ASA, OTSG, MTMTS, AND AMC
(MSC PREPARATION OF THE PYPR)

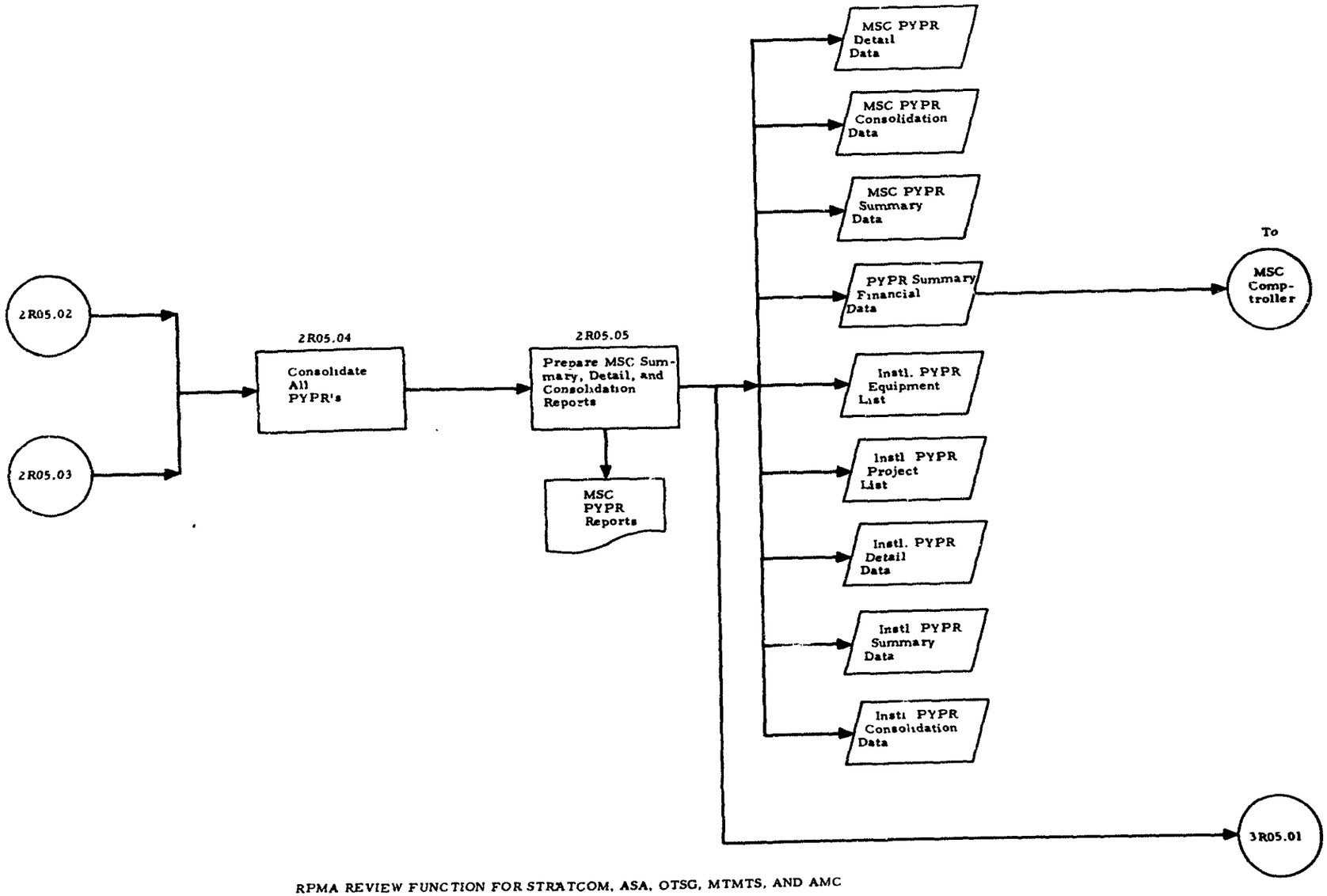

RPMA REVIEW FUNCTION FOR STRATCOM, ASA, OTSG, MTMTS, AND AMC
(MSC PREPARATION OF THE PYPR)

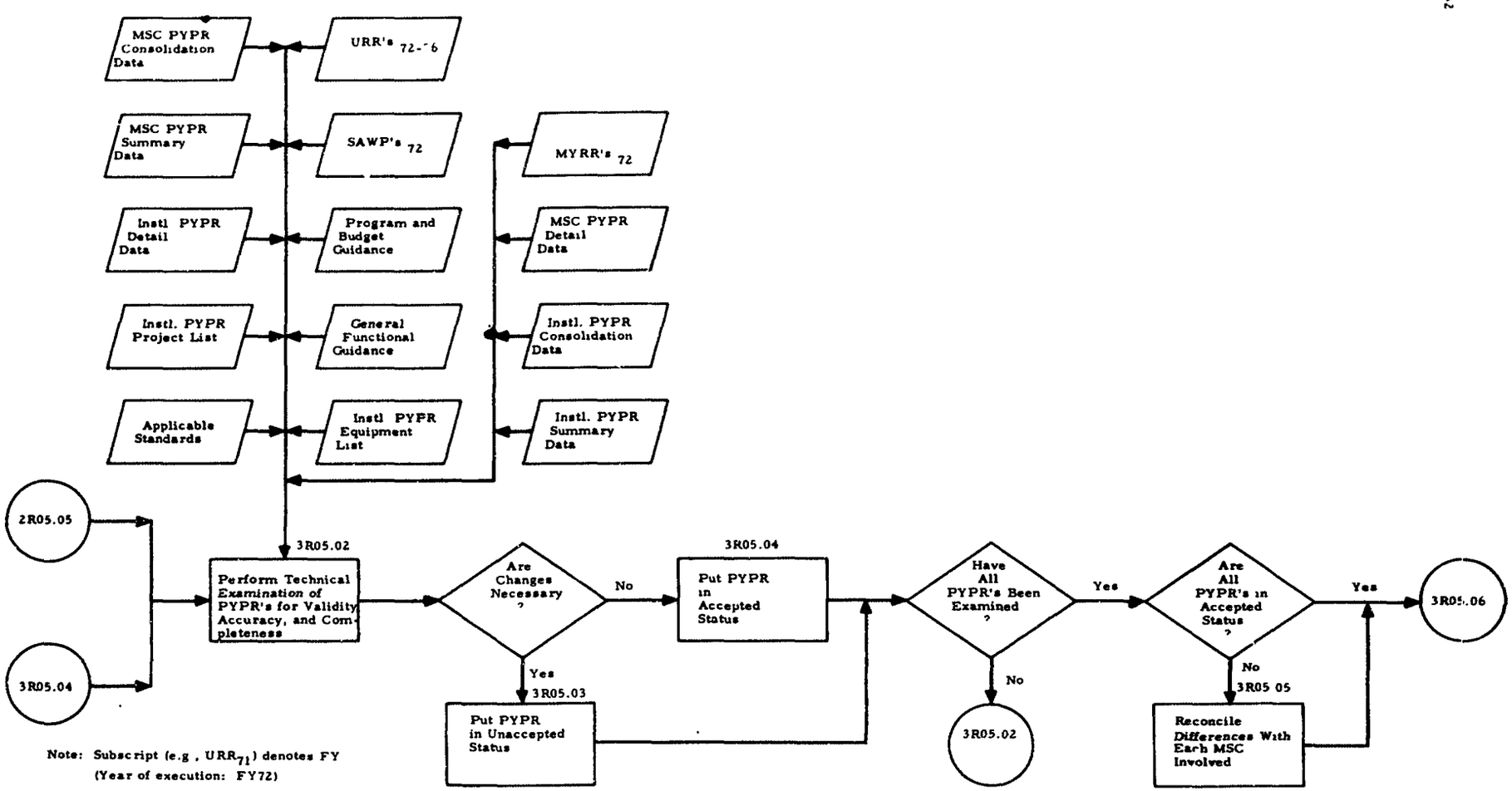

Note: Subscript (e.g , URR_{71}) denotes FY (Year of execution: FY72)

RPMA REVIEW FUNCTION FOR OCE (STRATCOM, ASA, OTSG, AND MTMTS) AND AMC I & SA
(MAFC PREPARATION OF THE PYPR)

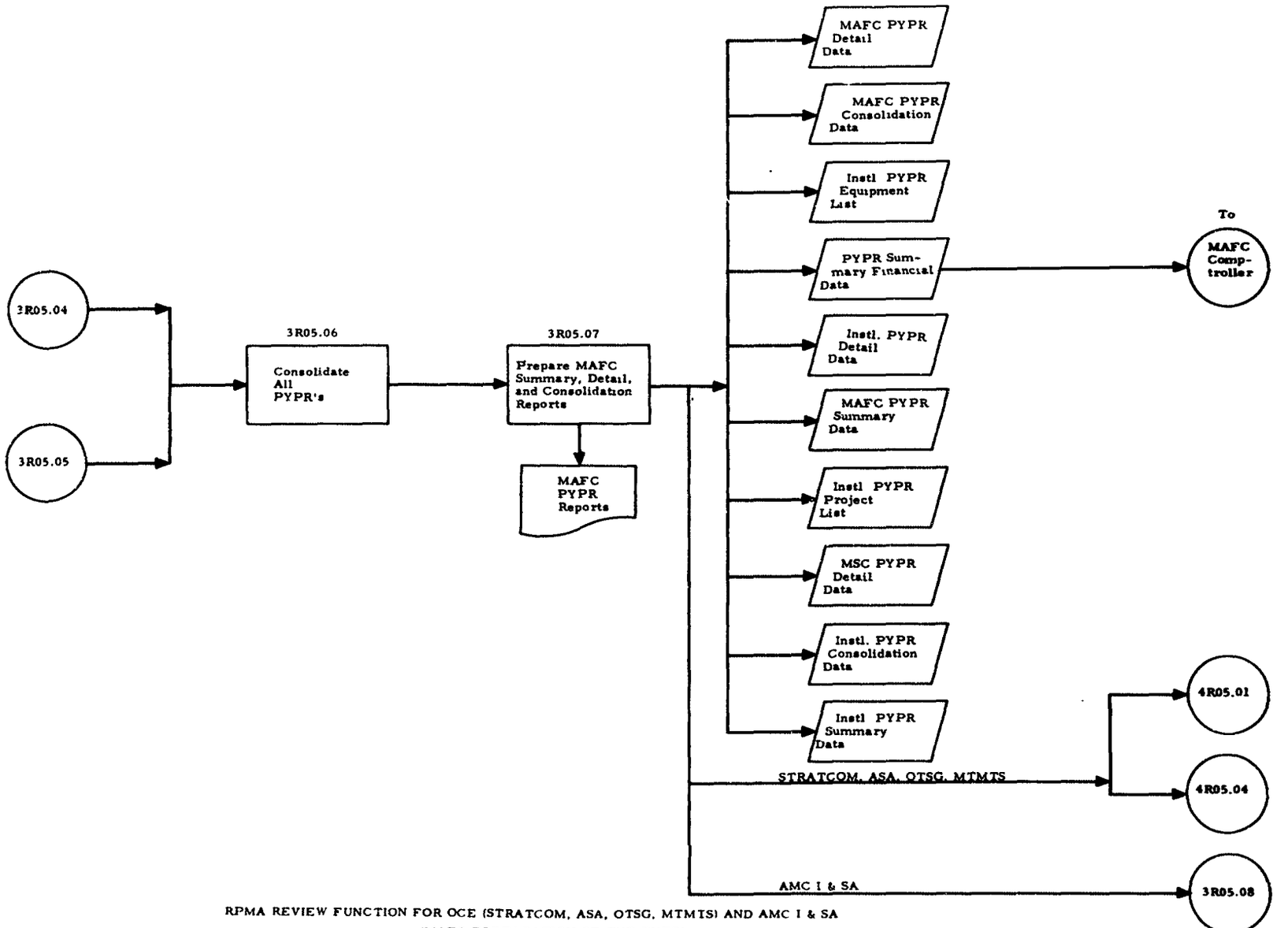

RPMA REVIEW FUNCTION FOR OCE (STRATCOM, ASA, OTSG, MTMTS) AND AMC I & SA
(MAFC PREPARATION OF THE PYPR)

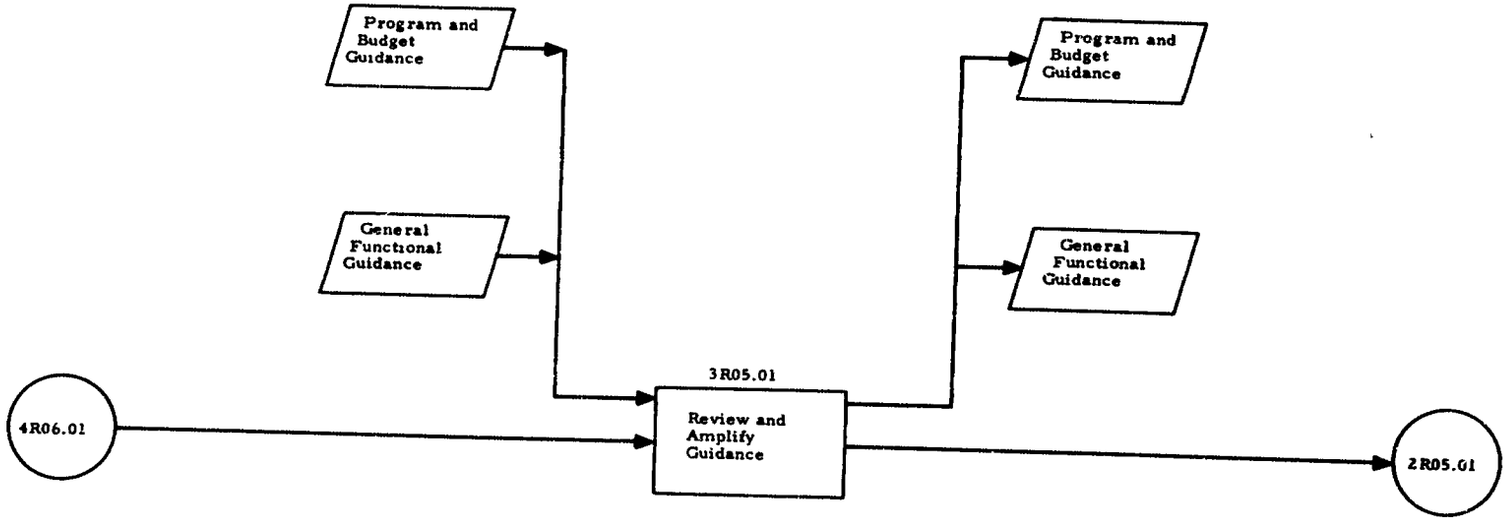

RPMA REVIEW FUNCTION FOR AMC I & S
(MAFC PREPARATION OF THE PYPR)

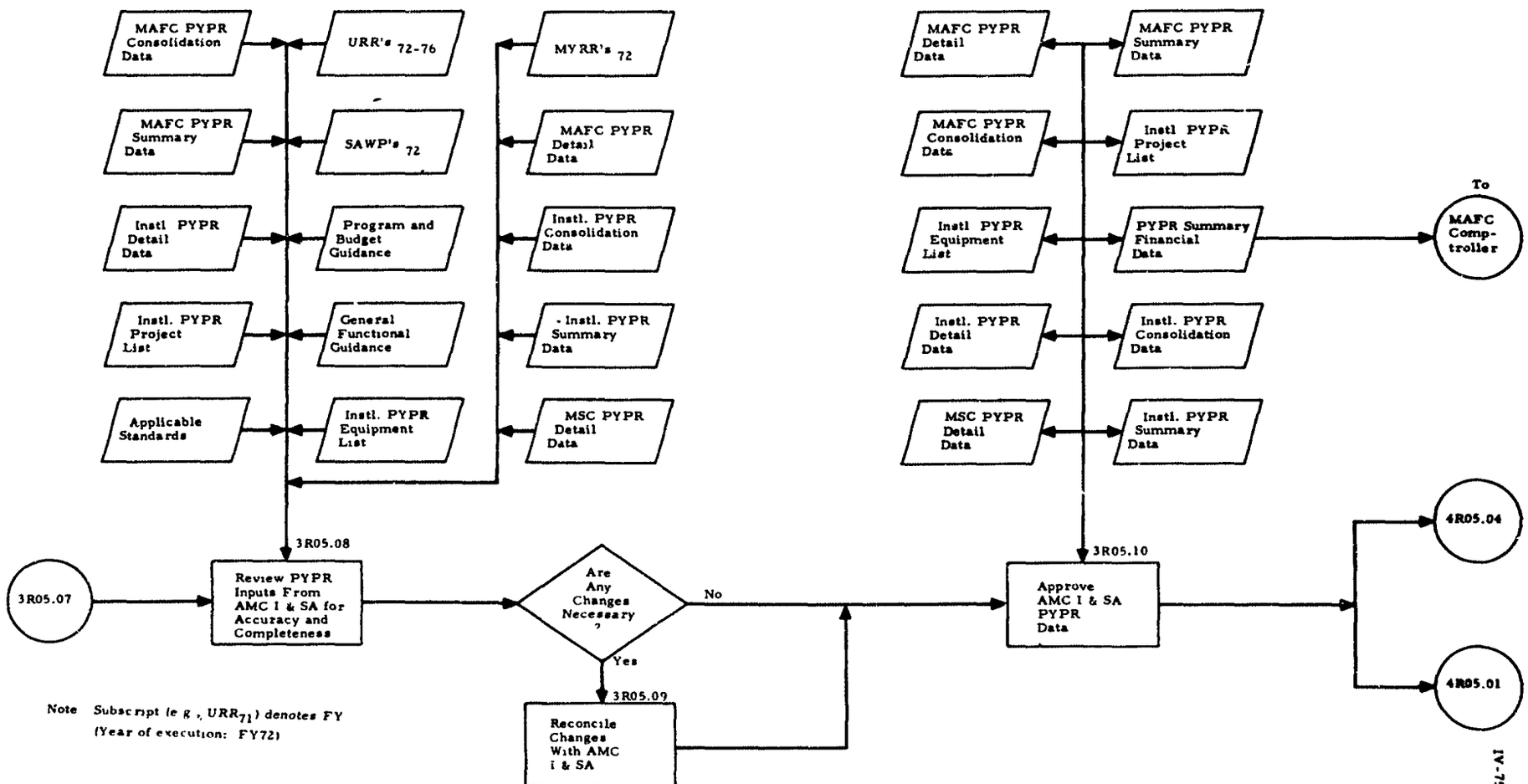

Note Subscript (e g , URR_{71}) denotes FY (Year of execution: FY72)

RPMA REVIEW FUNCTION FOR AMC I & S
(MAFC PREPARATION OF THE PYPR)

IV-755

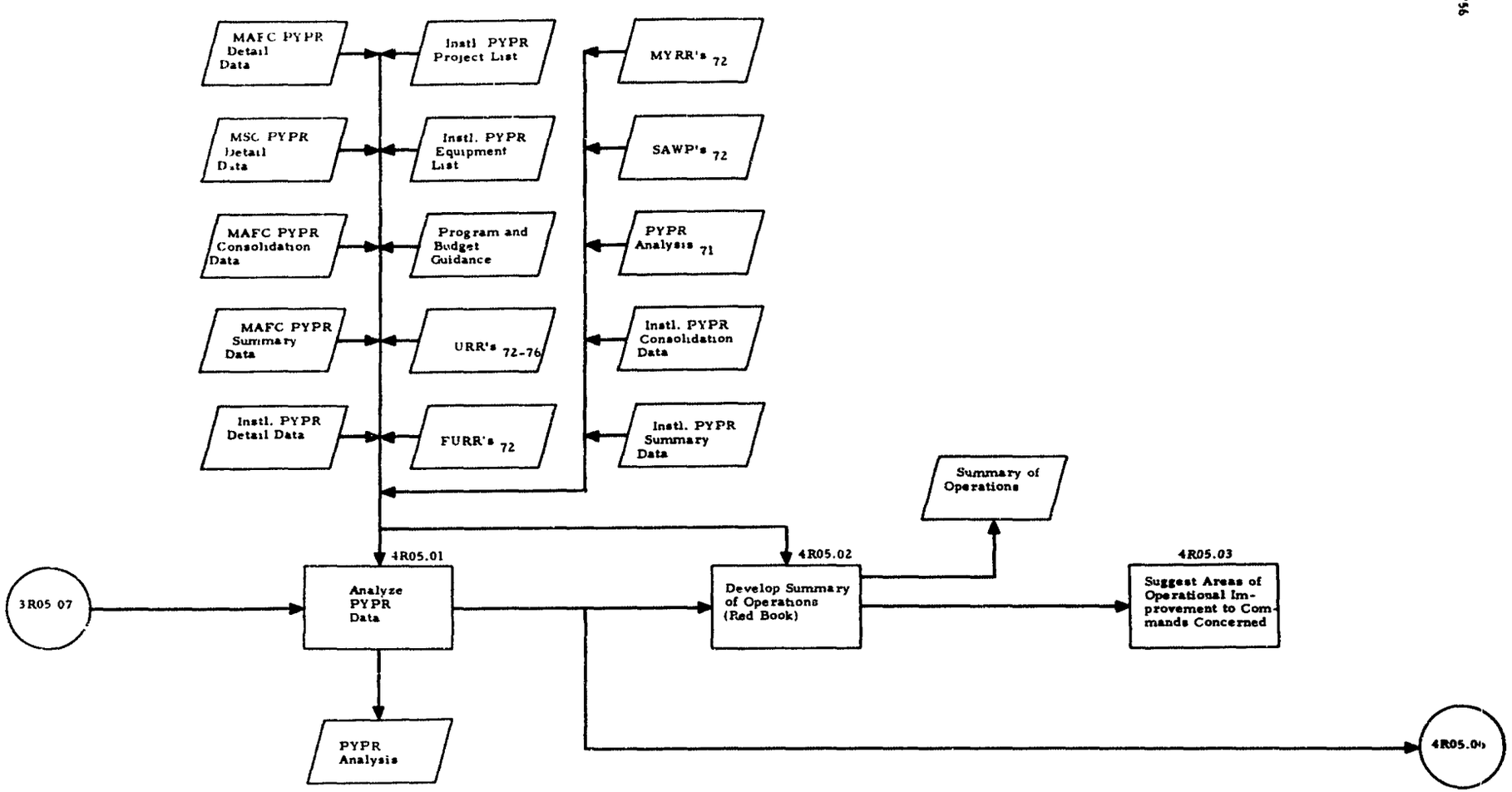

Note: Subscript (e.g., URR_{71}) denotes FY.
(Year of execution: FY72)

RPMA REVIEW FUNCTION FOR STRATCOM, ASA, OTSG, AND MTMTS
(OCE PROCESSING OF THE PYPR)

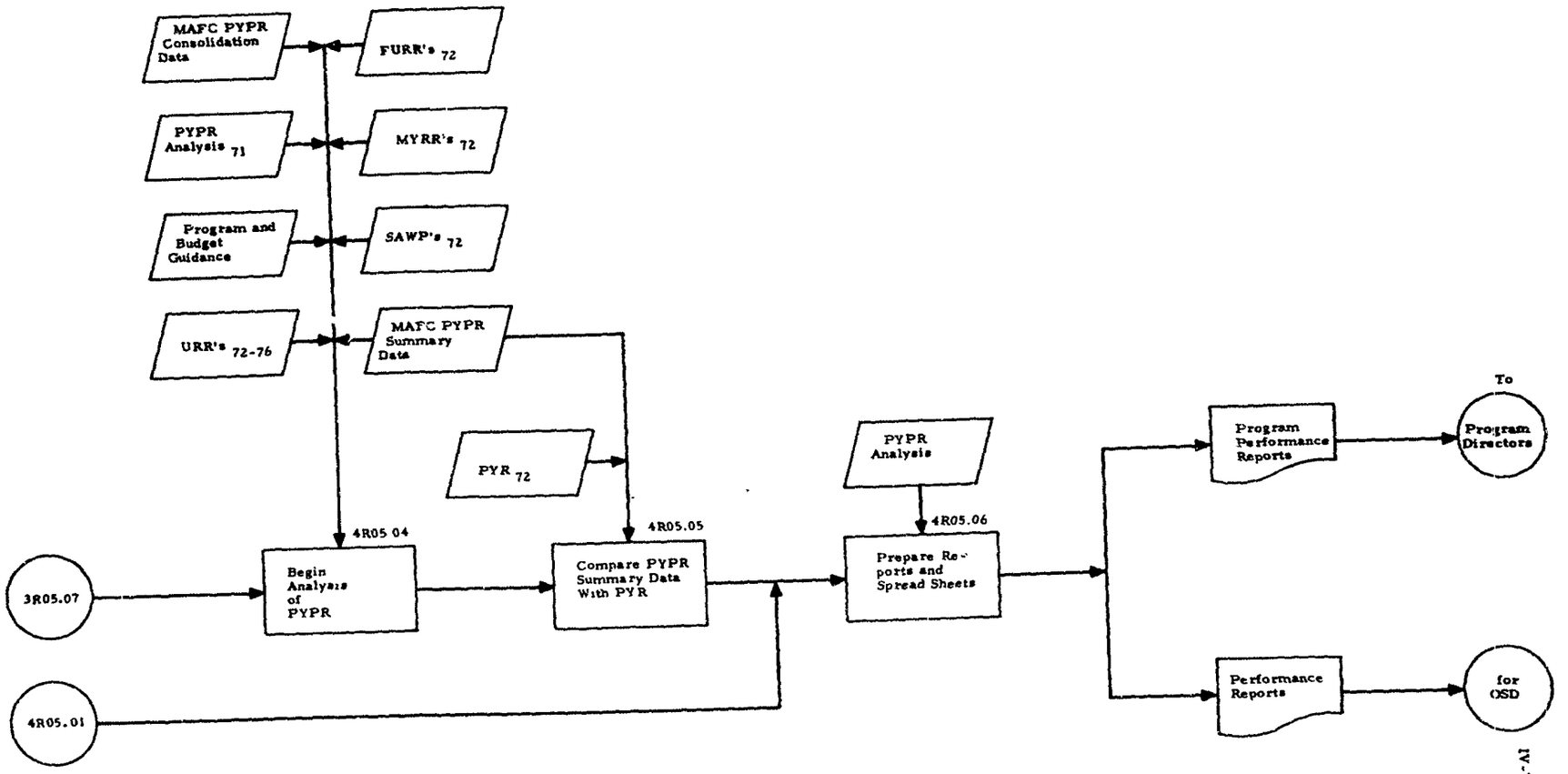

Note: Subscript (e.g., URR_{71}) denotes FY.
(Year of execution: FY72)

RPMA REVIEW FUNCTION FOR STRATCOM, ASA, OTSG, AND MTMTS
(RPMAO PROCESSING OF THE PYPR)

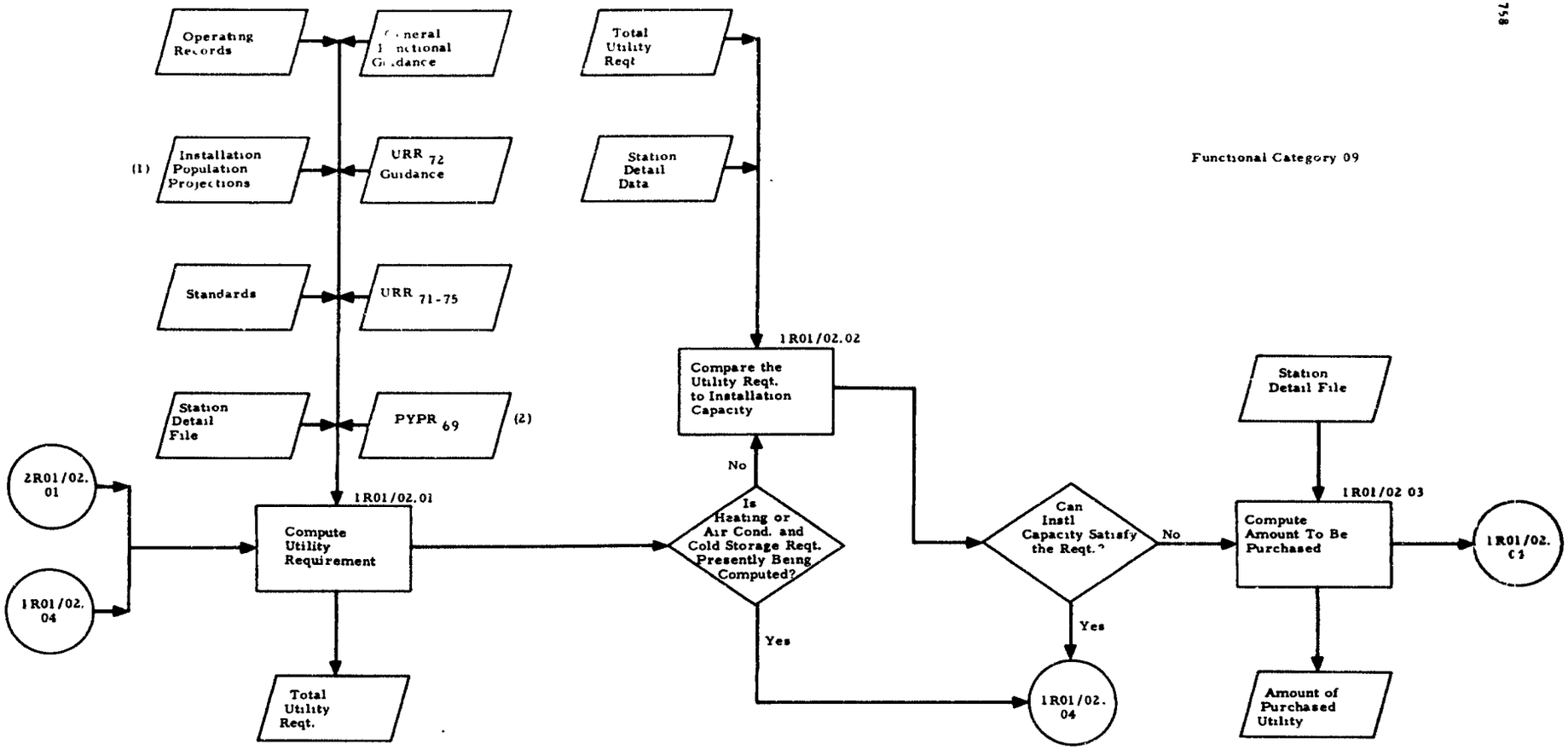

Functional Category 09

Notes: Subscript (e.g., URR_{71}) denotes FY.
(Year of execution: FY72)
(1): Not used during air-cond. and cold storage requirements computation.
(2): Not used during water and heating requirements computation.

RPMA PLANNING AND PROGRAMMING FUNCTION FOR GOCO PLANT REPORTING
(INSTALLATION PREPARATION OF THE URR)

Functional Category 09

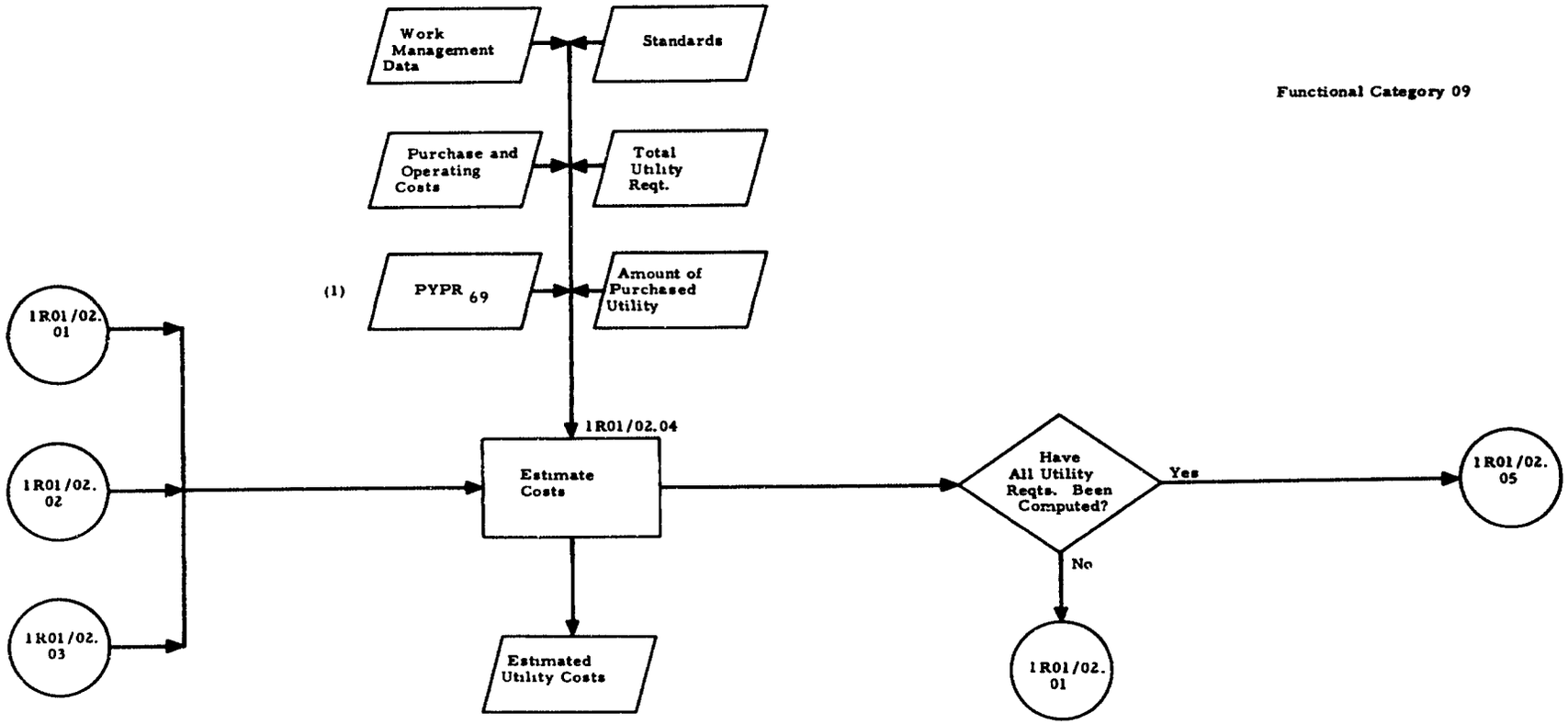

Note: Subscript (e.g., URR $_{71}$) denotes FY.
(Year of execution: FY72)
(1) Not used during computation of heating or air-conditioning and cold storage costs.

RPMA PLANNING AND PROGRAMMING FUNCTION FOR GOCO PLANT REPORTING
(INSTALLATION PREPARATION OF THE URR)

Functional Categories
09 and 12 (Refuse Handling)

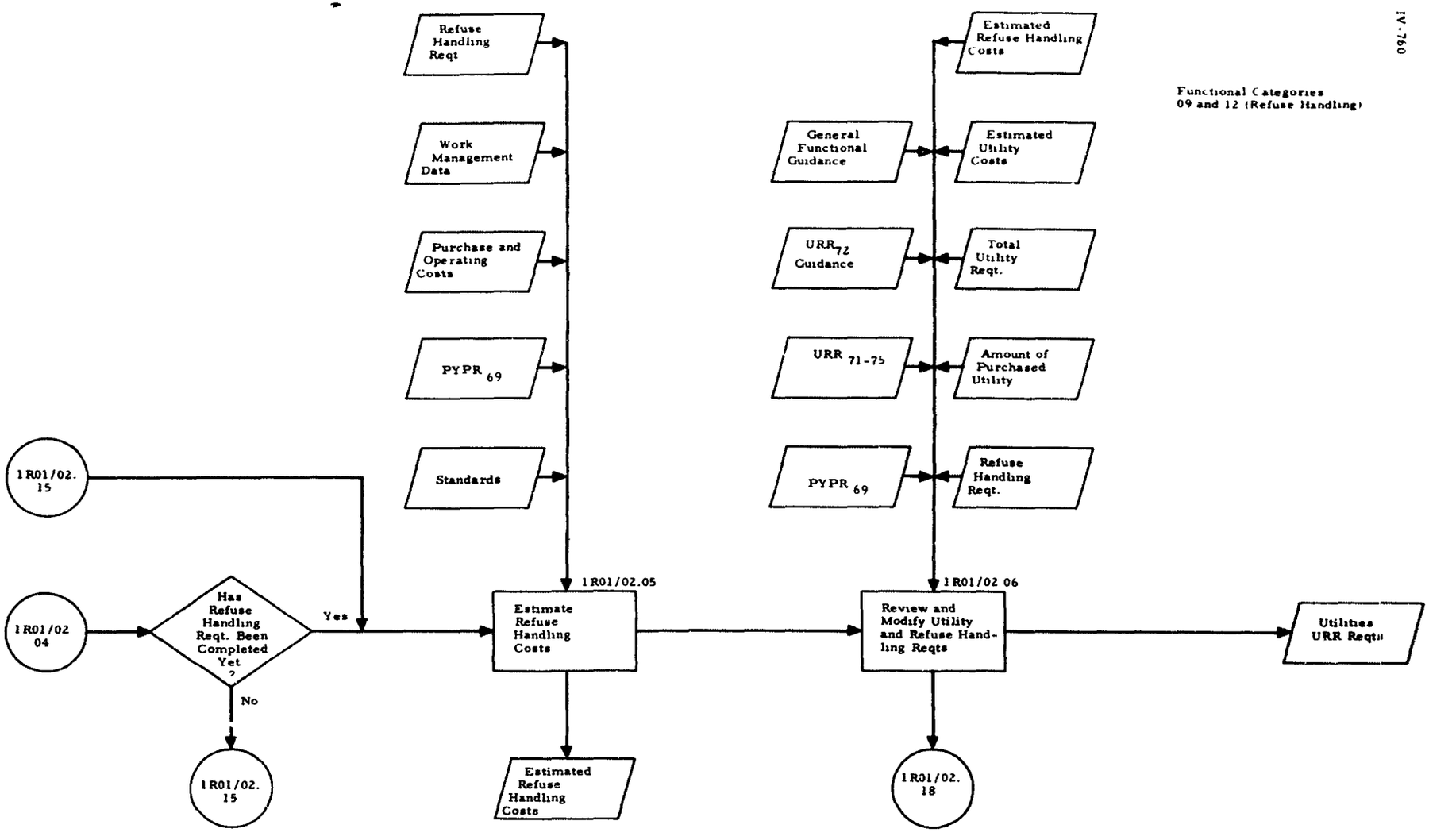

Note: Subscript (e.g., URR_{71}) denotes FY
(Year of execution: FY72)

RPMA PLANNING AND PROGRAMMING FUNCTION FOR GOCO PLANT REPORTING
(INSTALLATION PREPARATION OF THE URR)

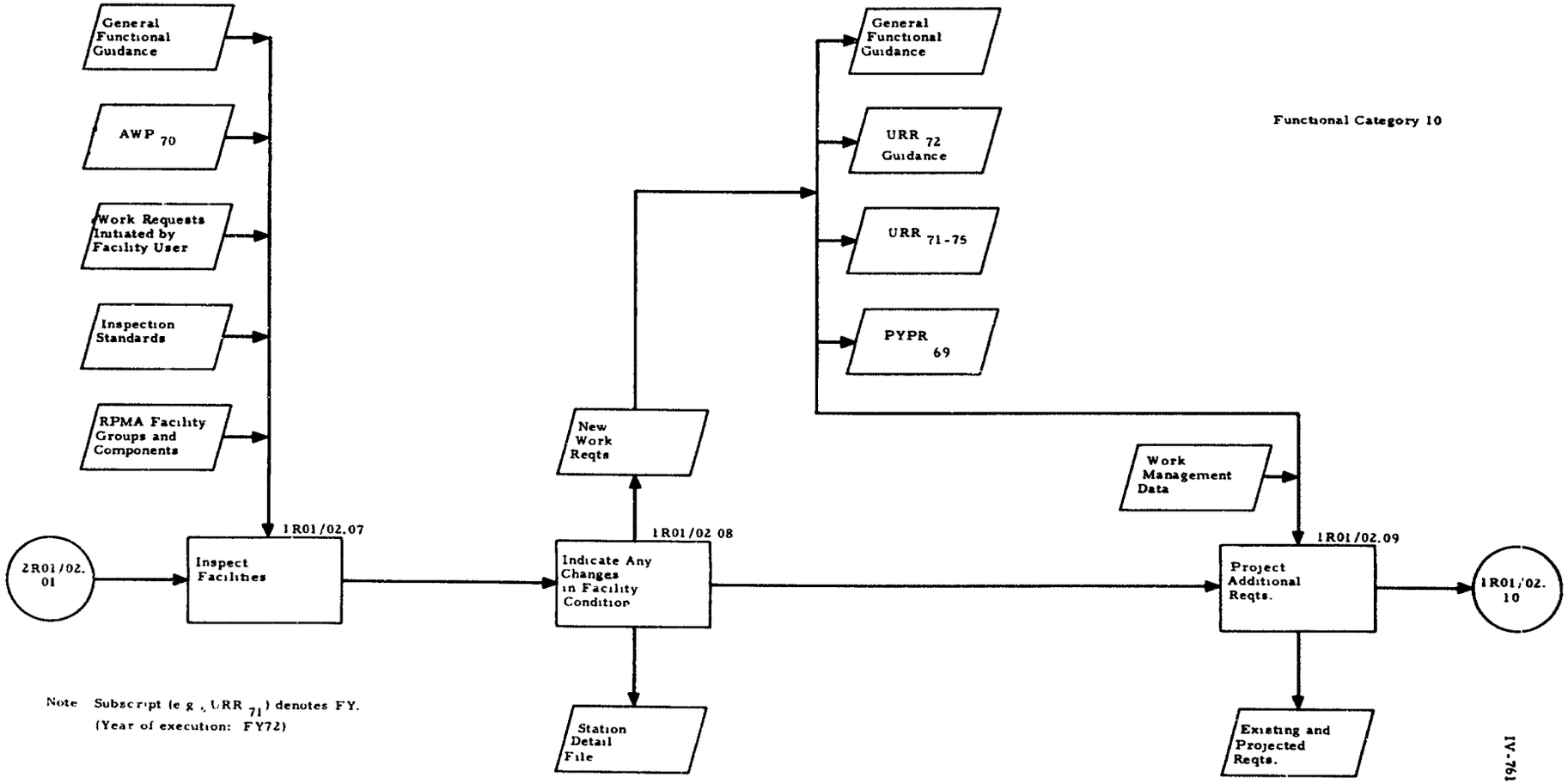

Note Subscript (e g , URR $_{71}$) denotes FY.
(Year of execution: FY72)

IV-761

RPMA PLANNING AND PROGRAMMING FUNCTION FOR GOCO PLANT REPORTING
(INSTALLATION PREPARATION OF THE URR)

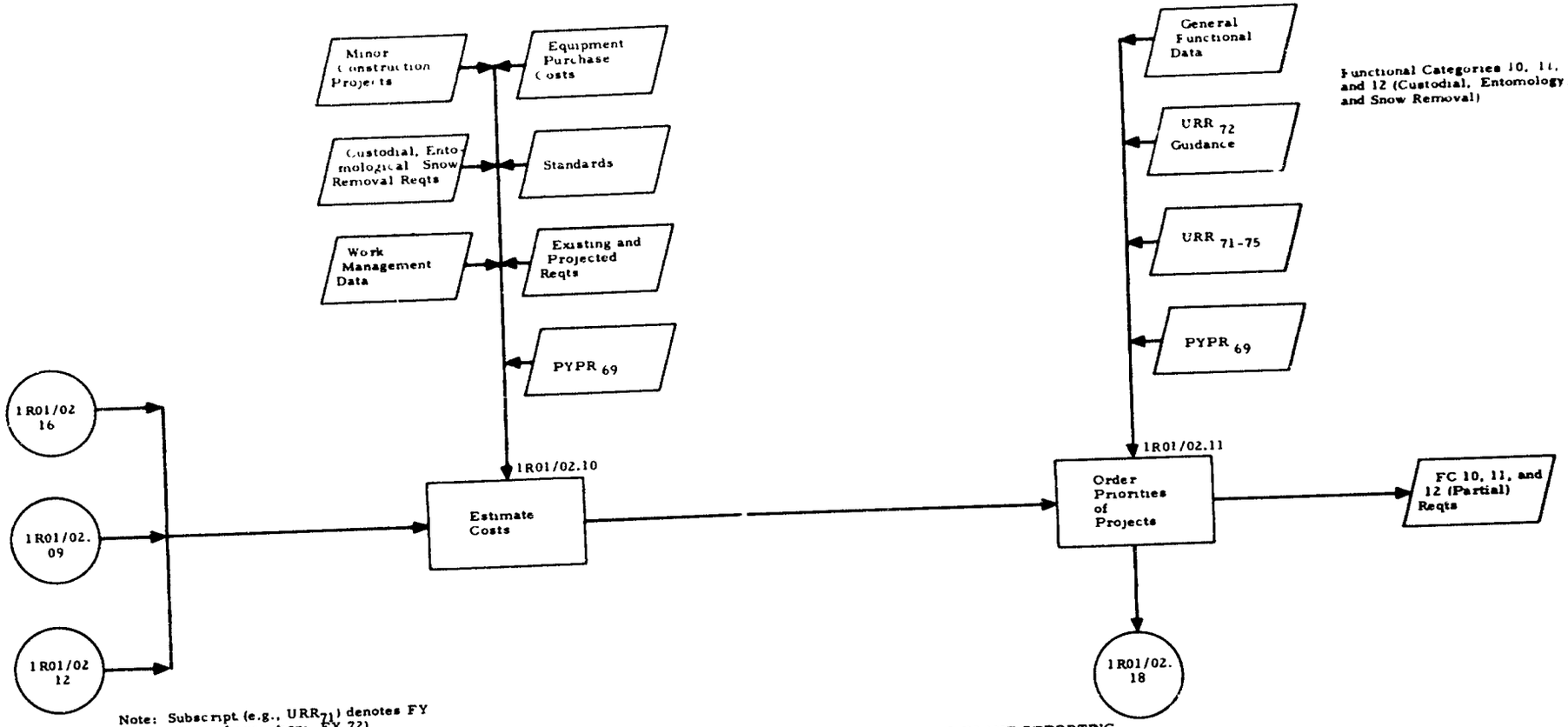

Functional Categories 10, 11, and 12 (Custodial, Entomology, and Snow Removal)

Note: Subscript (e.g., URR_{71}) denotes FY (Year of execution: FY 72)

RPMA PLANNING AND PROGRAMMING FUNCTION FOR GOCO PLANT REPORTING
(INSTALLATION PREPARATION OF THE URR)

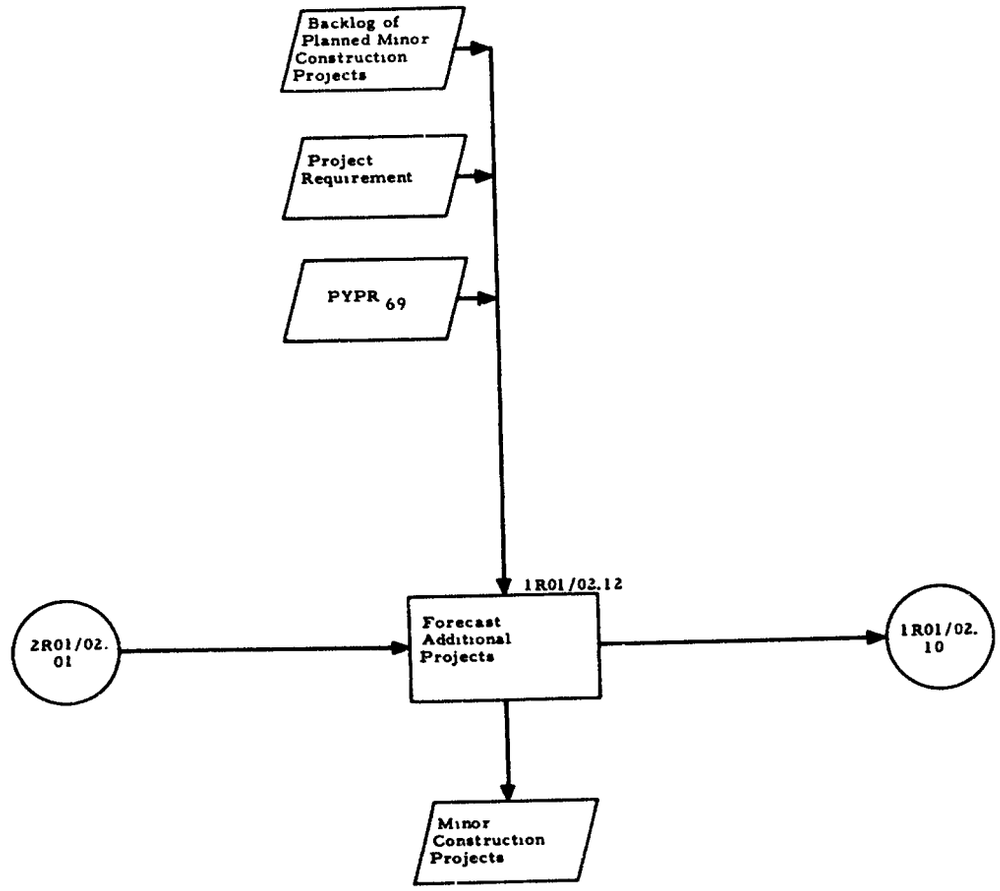

Functional Category 11

Note: Subscript denotes FY.
(Year of execution: FY72)

RPMA PLANNING AND PROGRAMMING FUNCTION FOR GOCO PLANT REPORTING
(INSTALLATION PREPARATION OF THE URR)

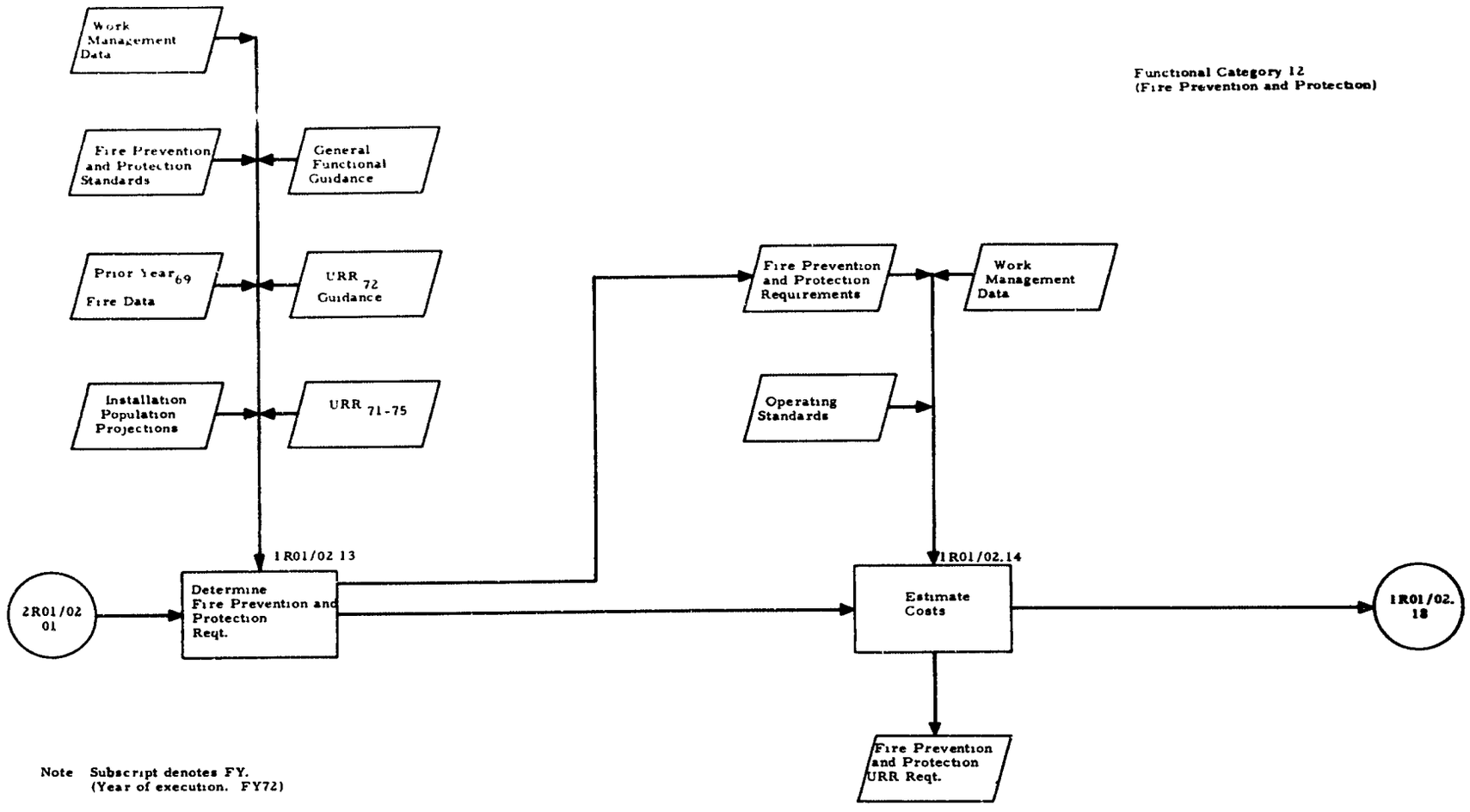

Note Subscript denotes FY.
(Year of execution. FY72)

RPMA PLANNING AND PROGRAMMING FUNCTION FOR GOCO PLANT REPORTING
(INSTALLATION PREPARATION OF THE URR)

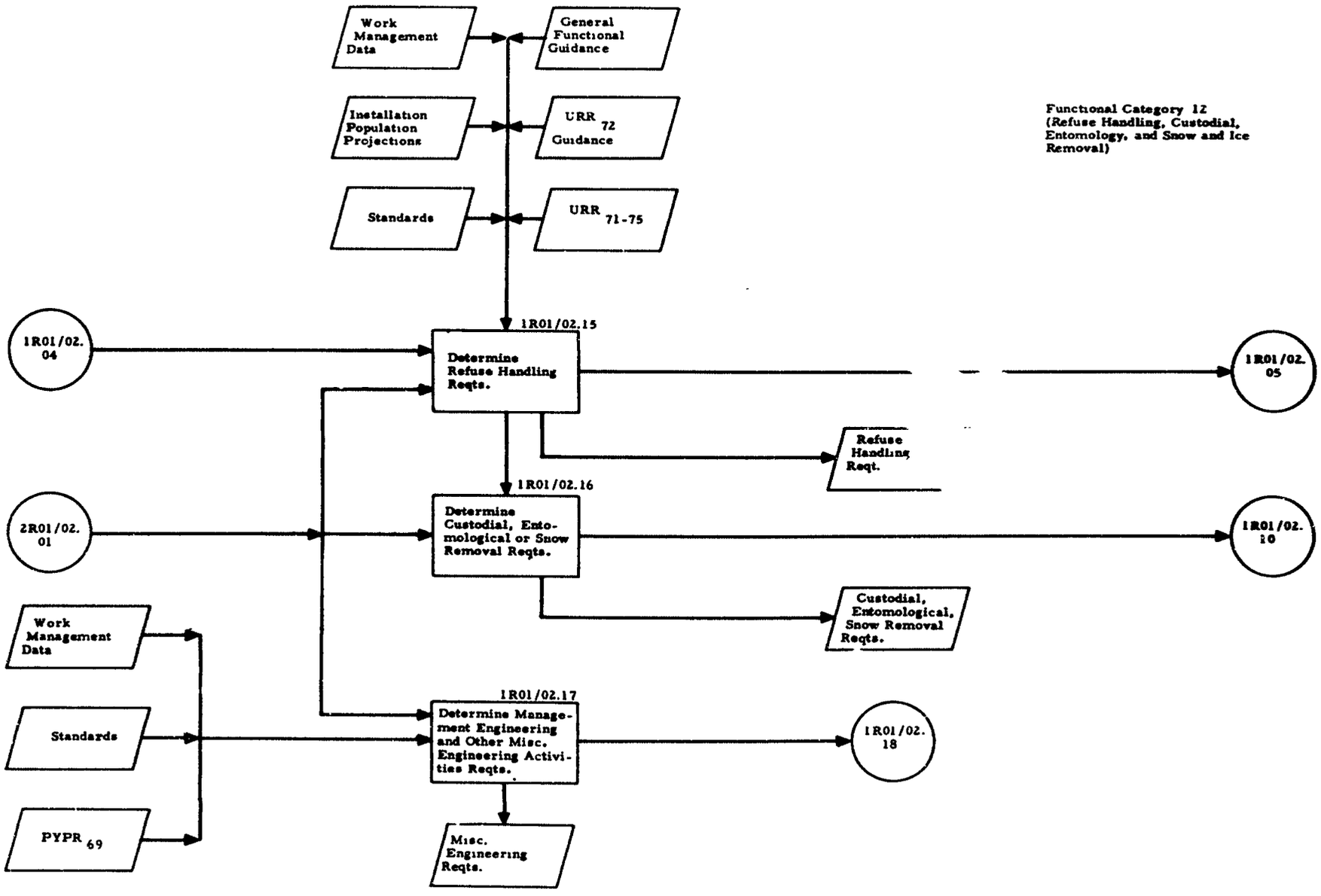

Note: Subscript (e.g., URR_{71}) denotes FY. (Year of execution: FY72)

RPMA PLANNING AND PROGRAMMING FUNCTION FOR GOCO PLANT REPORTING (INSTALLATION PREPARATION OF THE URR)

Consolidation of URR Requirements and Preparation of Summary

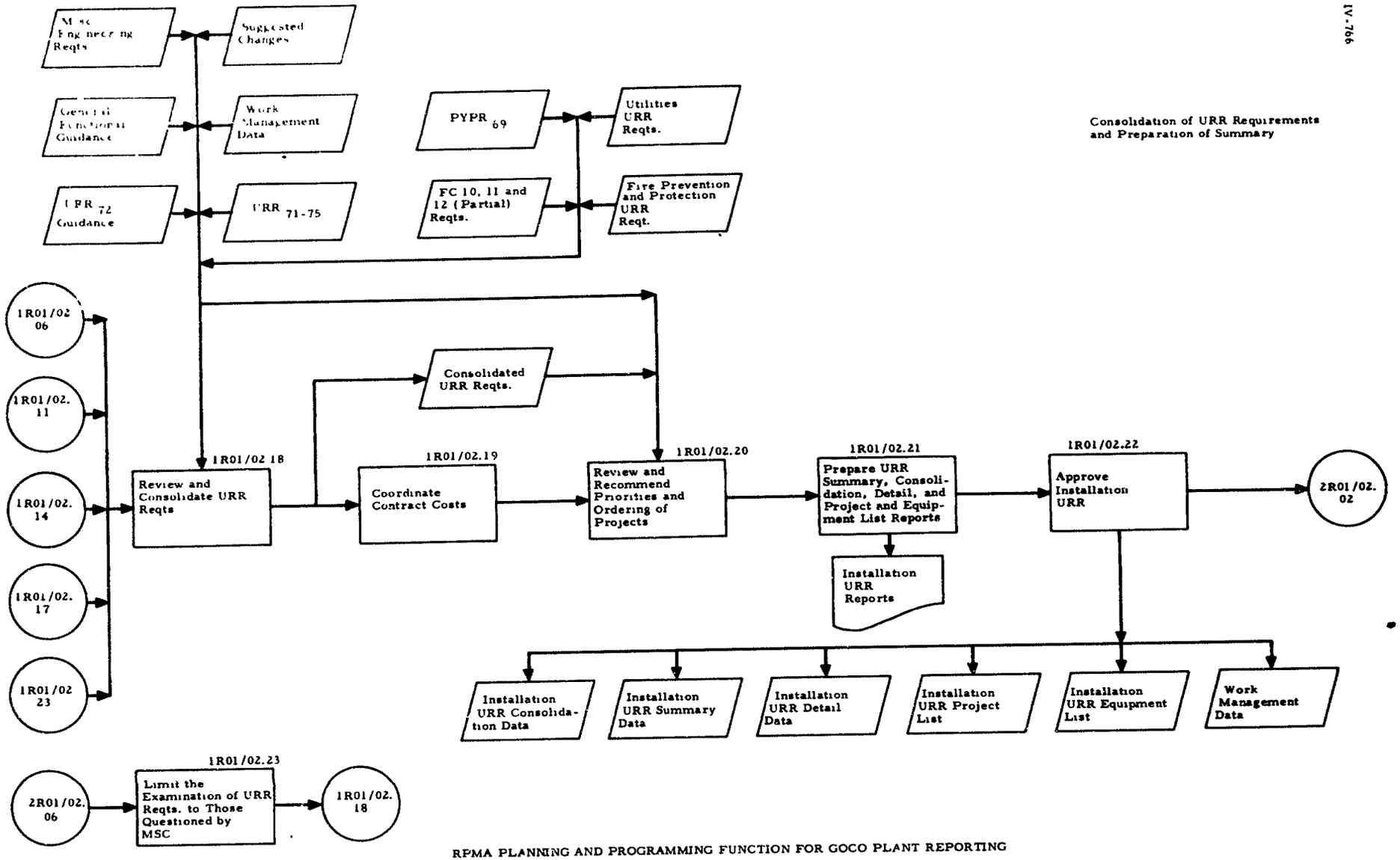

Note: Subscript denotes FY (Year of execution: FY72)

RPMA PLANNING AND PROGRAMMING FUNCTION FOR GOCO PLANT REPORTING (INSTALLATION PREPARATION OF THE URR)

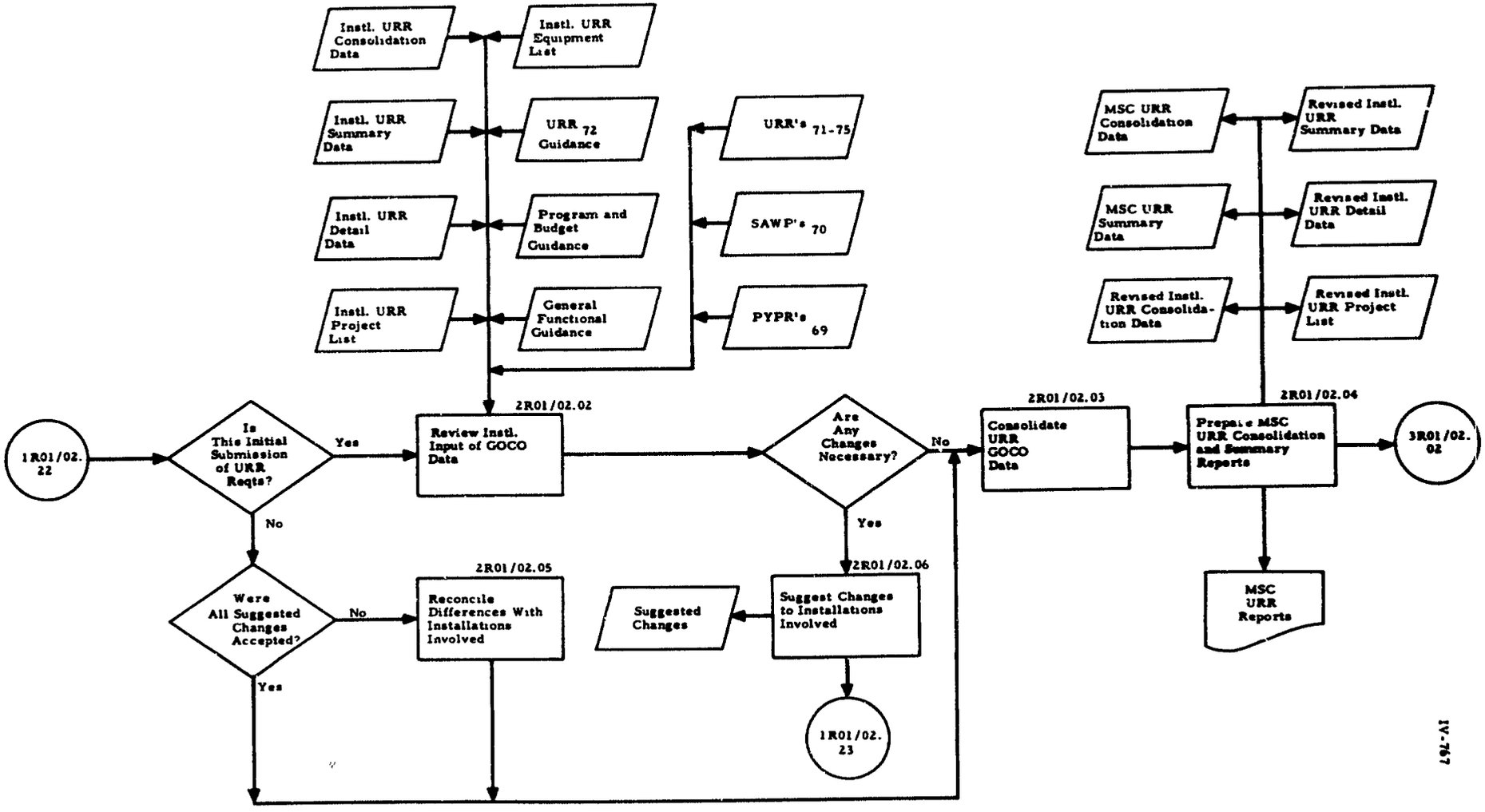

Note: Subscript (e.g., URR_{71}) denotes FY.
(Year of execution: FY72)

RPMA PLANNING AND PROGRAMMING FUNCTION FOR GOCO PLANT REPORTING
(MSC PREPARATION OF THE URR)

IV-767

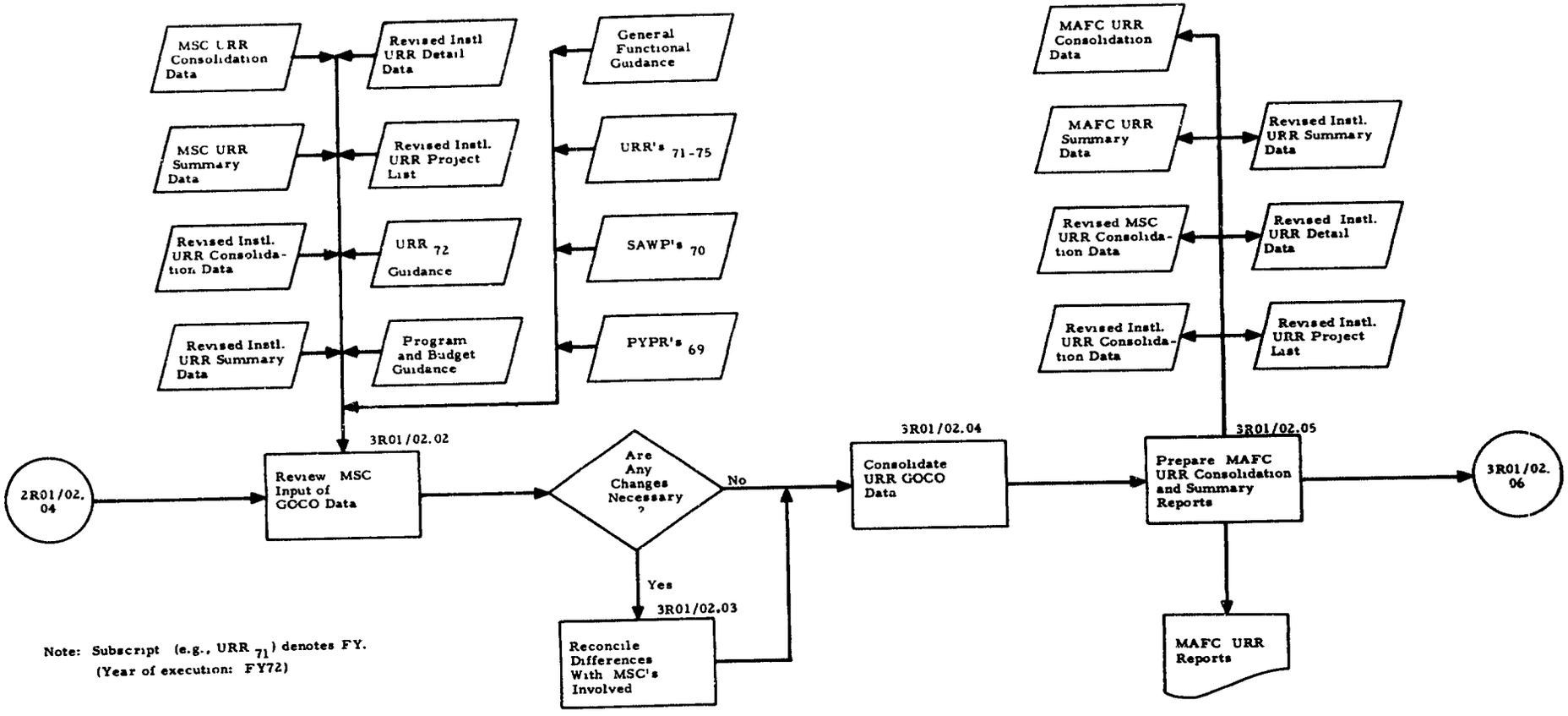

Note: Subscript (e.g., URR $_{71}$) denotes FY.
(Year of execution: FY72)

RPMA PLANNING AND PROGRAMMING FUNCTION FOR GOCO PLANT REPORTING
(AMC I & SA PREPARATION OF THE URR)

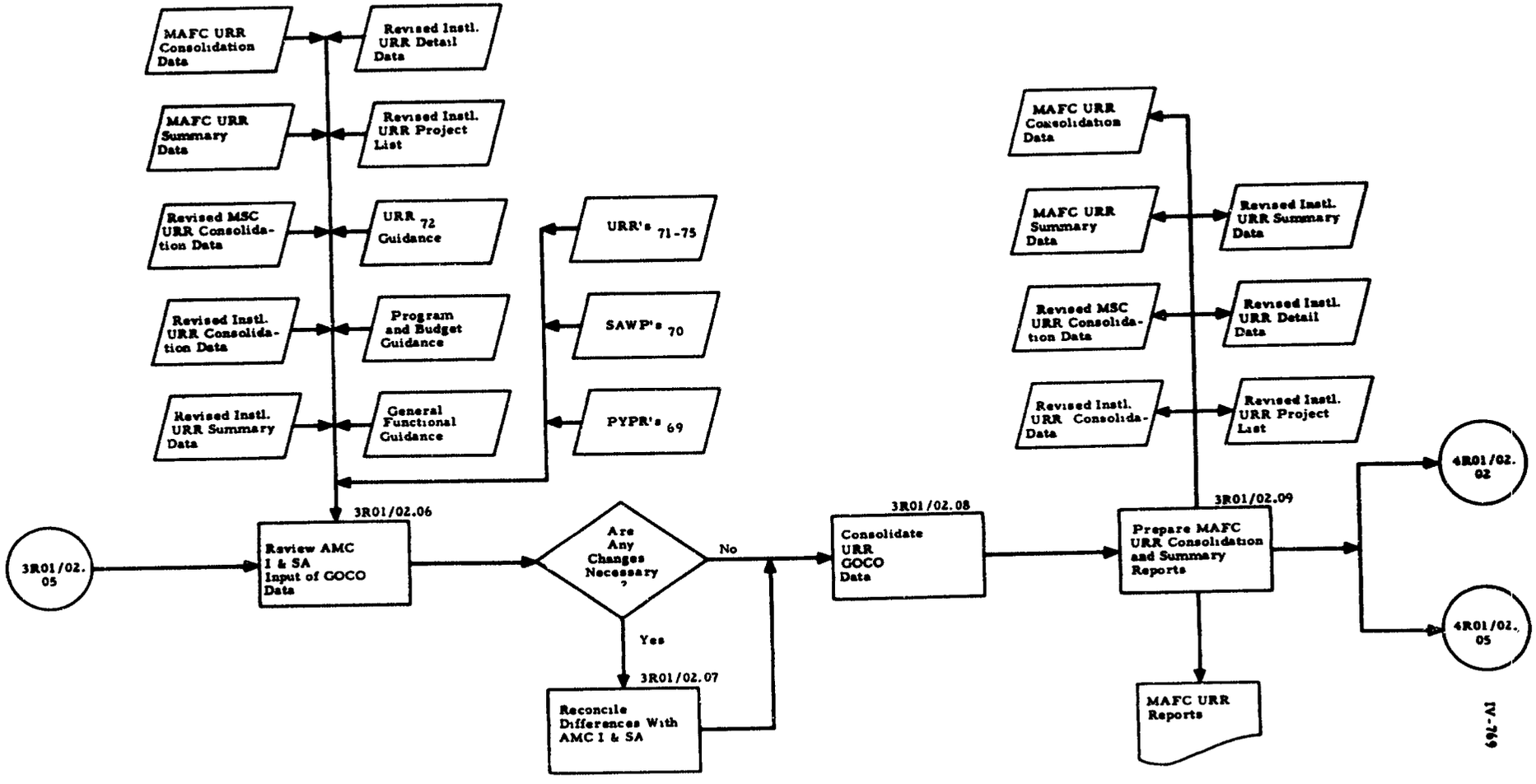

Note: Subscript (e.g., URR $_{71}$) denotes FY. (Year of execution: FY72)

RPMA PLANNING AND PROGRAMMING FUNCTION FOR GOCO PLANT REPORTING
(AMC I & S PREPARATION OF THE URR)

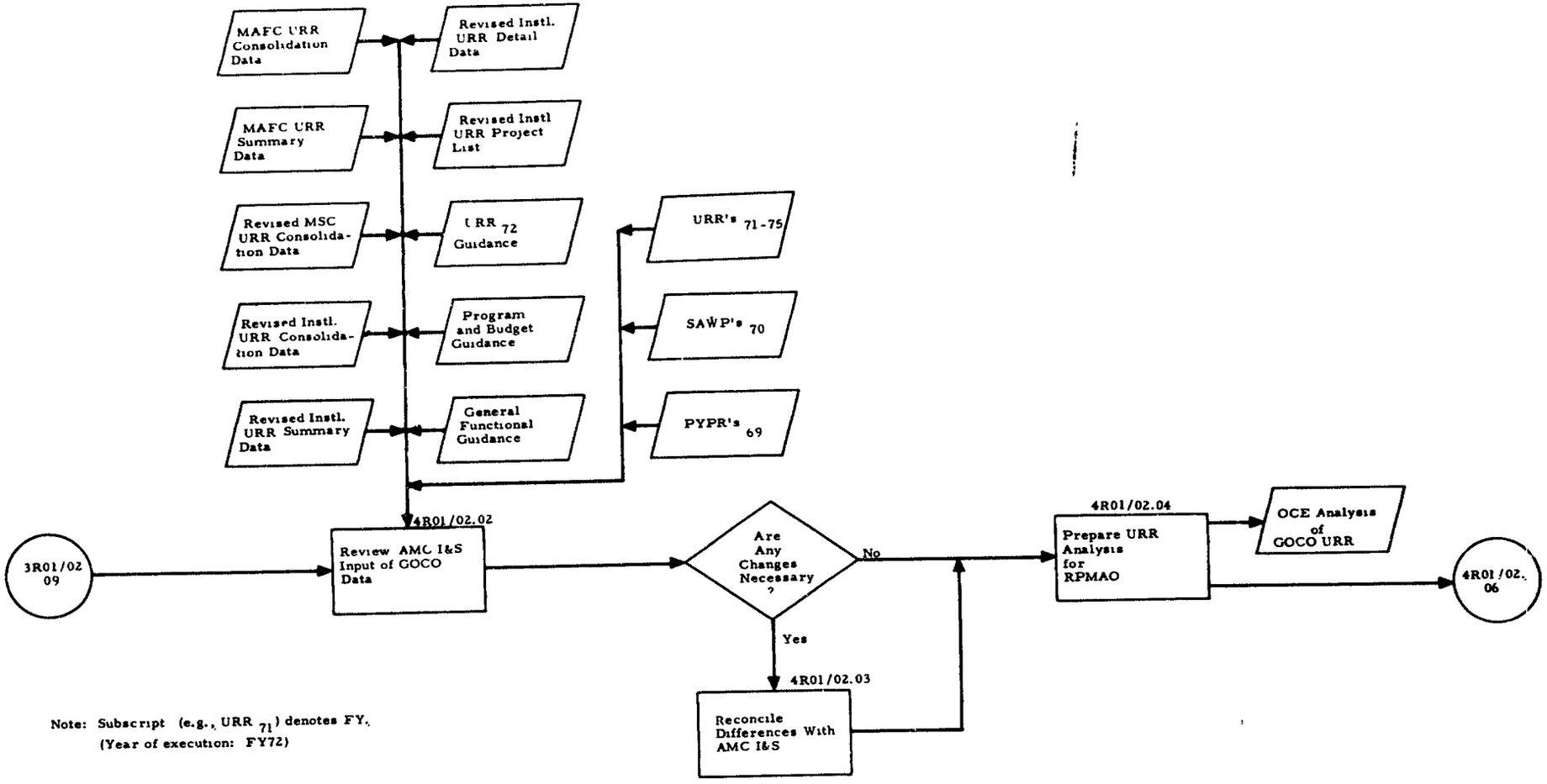

Note: Subscript (e.g., URR $_{71}$) denotes FY.
(Year of execution: FY72)

RPMA PLANNING AND PROGRAMMING FUNCTION FOR GOCO PLANT REPORTING
(OCE PROCESSING OF THE URR)

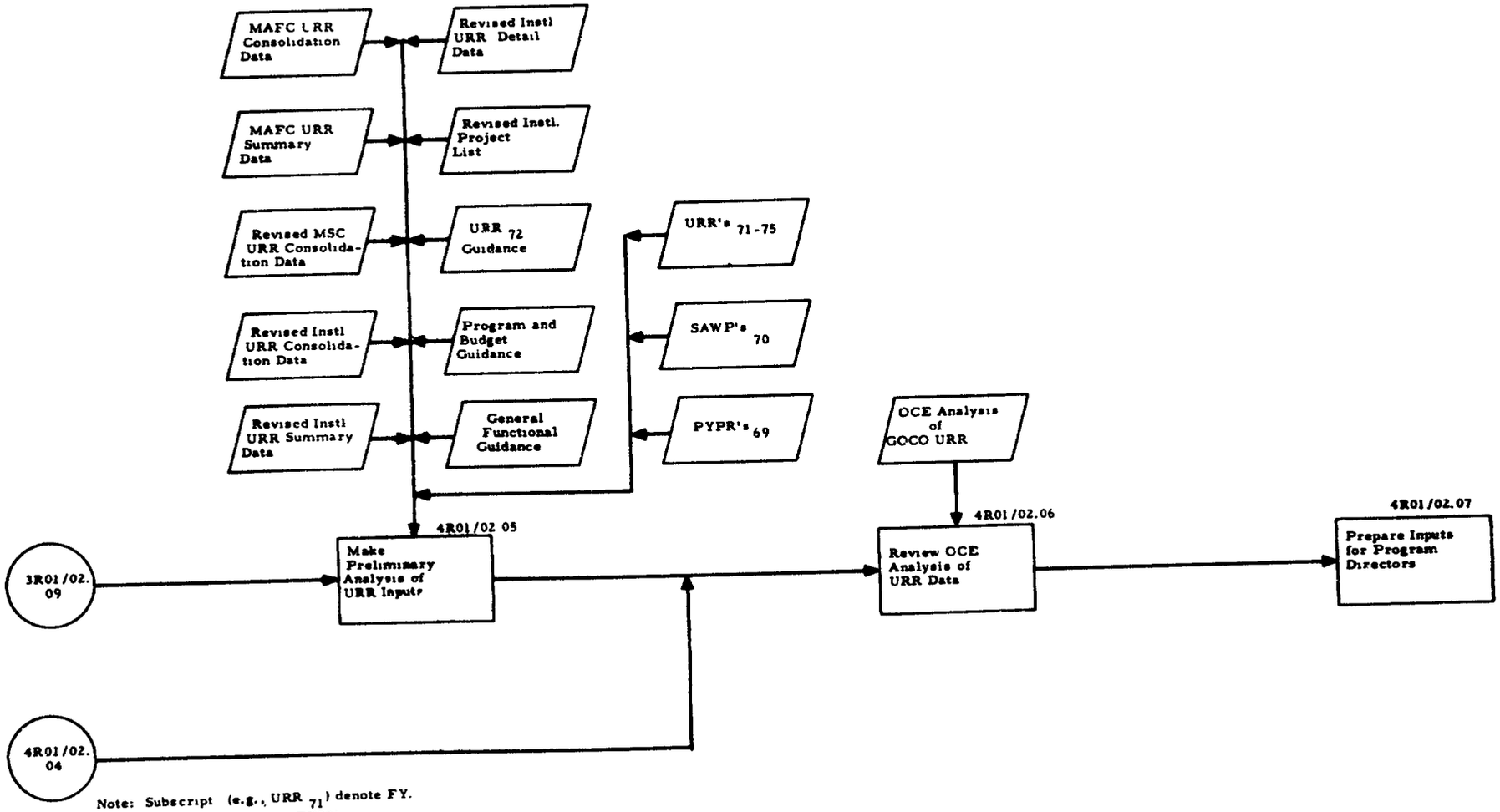

Note: Subscript (e.g., URR $_{71}$) denote FY.
(Year of execution: FY72)

RPMA PLANNING AND PROGRAMMING FUNCTION FOR GOCO PLANT REPORTING
(RPMAO PROCESSING OF THE URR)

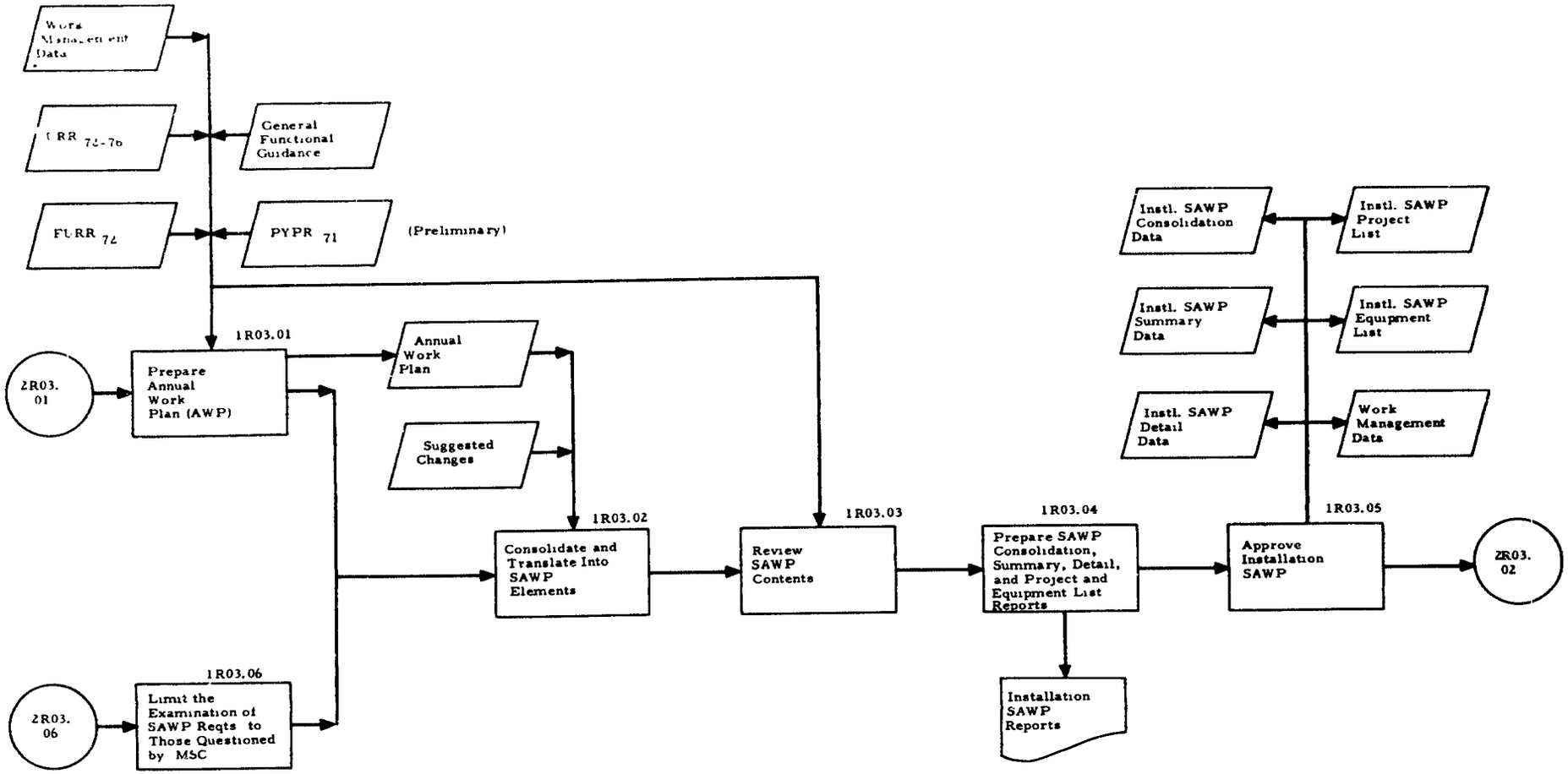

Note. Subscript denotes FY.
(Year of execution. FY72)

RPMA BUDGETING FUNCTION FOR GOCO PLANT REPORTING
(INSTALLATION PREPARATION OF THE SAWP)

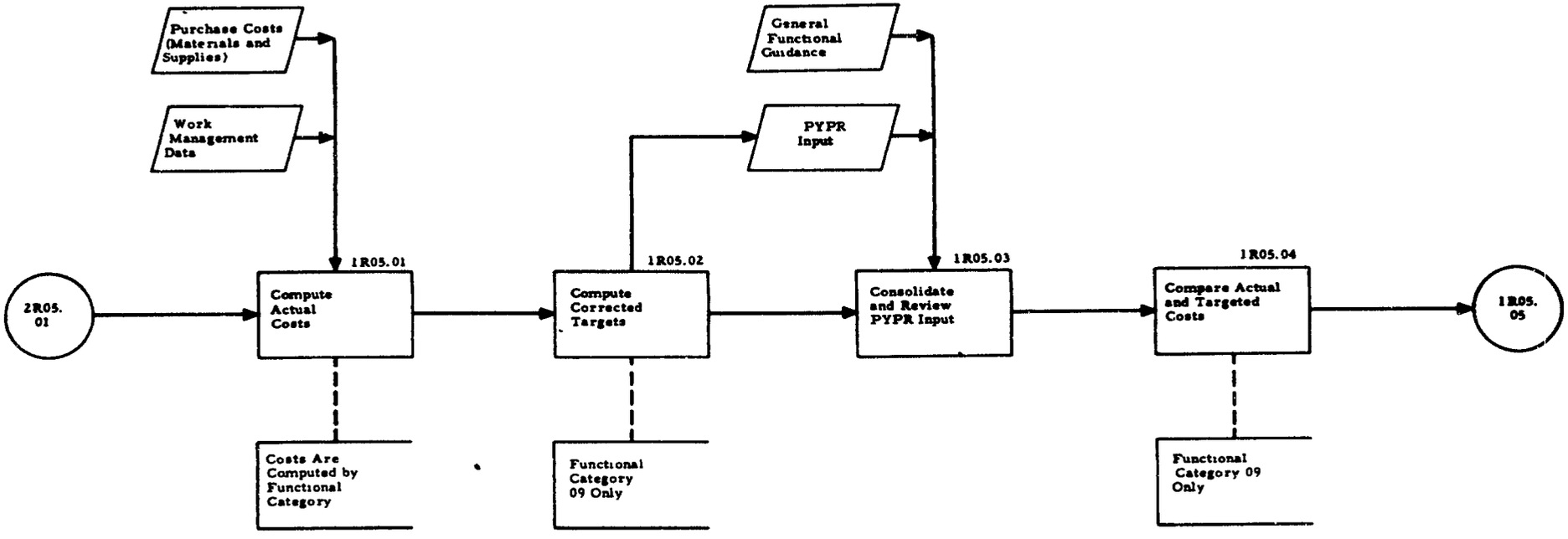

Note: Subscript (e.g., URR_{71}) denotes FY.
(Year of execution: FY72)

RPMA REVIEW FUNCTION FOR GOCO PLANT REPORTING
(INSTALLATION PREPARATION OF THE PYPR)

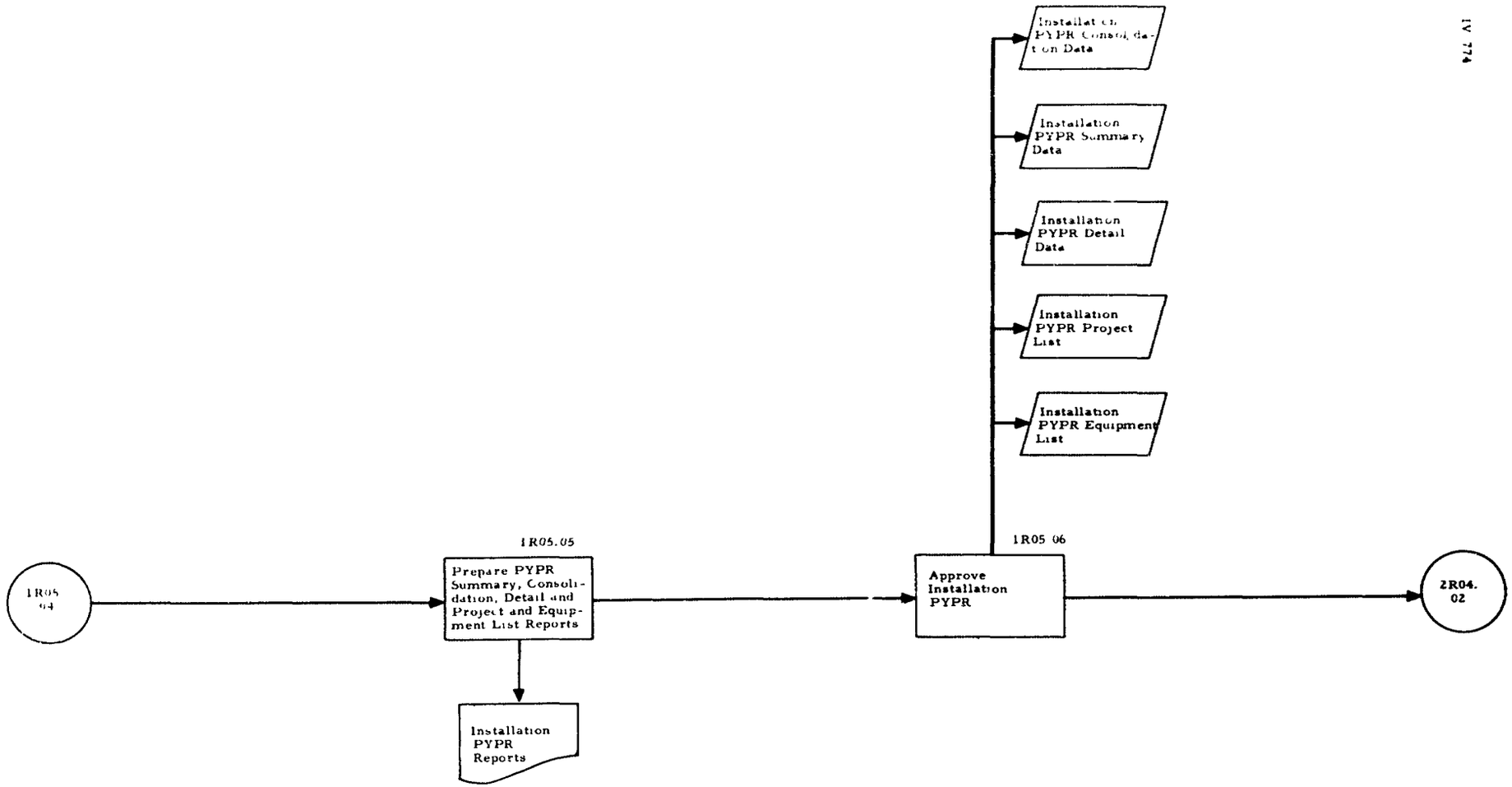

Note Subscript denotes FY
(Year of execution. FY72)

RPMA REVIEW FUNCTION FOR GOCO PLANT REPORTING
(INSTALLATION PREPARATION OF THE PYPR)

Unclassified
Security Classification

DOCUMENT CONTROL DATA - R & D

(Security classification of title, body of abstract and indexing annotation must be entered when the overall report is classified)

1. ORIGINATING ACTIVITY *(Corporate author)*
Planning Research Corporation
1100 Glendon Avenue
Los Angeles, California 90024

2a. REPORT SECURITY CLASSIFICATION
Unclassified

2b. GROUP
NA

3. REPORT TITLE
Real Property Maintenance Activities (RPMA) Functional Design For the Integrated Facilities System

4. DESCRIPTIVE NOTES *(Type of report and inclusive dates)*
Second of a two section report.

5. AUTHOR(S) *(First name, middle initial, last name)*
John G. Cleveland, John H. Linden, Barry Reichert
Edward J. Harms, Harvey R. Meltzer, Robert K. Wood
Walter Jamieson, John W. Nocita

6. REPORT DATE
June 1970

7a. TOTAL NO. OF PAGES
658

7b. NO. OF REFS

8a. CONTRACT OR GRANT NO.
DAHC15 68 C 0404

b. PROJECT NO.

c.

d.

9a. ORIGINATOR'S REPORT NUMBER(S)
R-1209, Vol II, Part 3

9b. OTHER REPORT NO(S) *(Any other numbers that may be assigned this report)*

10. DISTRIBUTION STATEMENT
Each transmittal of this document outside the agencies of the US Government must have prior approval of HQ, DA, ATTN: DCSLOG/DI-IFSO.

11. SUPPLEMENTARY NOTES
None

12. SPONSORING MILITARY ACTIVITY
Headquarters, Department of the Army
Deputy Chief of Staff for Logistics
Director of Installations
Washington, D. C. 20310

13. ABSTRACT
~~This~~ is a companion document to report R-1209, Volume II, Part 3. This document, Section IV of report R-1209, Volume II, Part 3, provides specific details on data source/flow/disposition in support of the Real Property Maintenance Activities Modular Design for the Integrated Facilities System. (U)

14. KEY WORDS

Budgeting	Military Facilities
Decision Making	Readiness
Facilities	Requirements
Facilities Management	Real Property
Information Systems	Systems Analysis
Logistics Management	
Logistics Operations	
Logistics Planning	
Logistics Readiness	
Maintenance	
Management Engineering	
Management Planning	
Management Systems	

DD FORM 1 NOV 65 1473 REPLACES DD FORM 1473, 1 JAN 64, WHICH IS OBSOLETE FOR ARMY USE.

Unclassified
Security Classification