UNCLASSIFIED

AD NUMBER
AD871154
LIMITATION CHANGES
TO: **Approved for public release; distribution is unlimited.**
FROM: **Distribution authorized to U.S. Gov't. agencies and their contractors; Critical Technology; APR 1970. Other requests shall be referred to U.S. Army Aviation Materiel Laboratories, Fort Eustist Virginia 23604. This document contains export-controlled technical data.**
AUTHORITY
USAAMRDL ltr, 18 Jun 1971

THIS PAGE IS UNCLASSIFIED

AD

AD871154

USAAVLABS TECHNICAL REPORT 70-16

A STUDY OF V/STOL GROUND-BASED SIMULATION TECHNIQUES

By

J.B. Sinacori

AD No. ____
DDC FILE COPY

DDC
RECEIVED
JUL 1970
B

April 1970

U. S. ARMY AVIATION MATERIEL LABORATORIES
FORT EUSTIS, VIRGINIA

CONTRACT DAAJ02-68-C-0019
NORTHROP CORPORATION
AIRCRAFT DIVISION
HAWTHORNE, CALIFORNIA

This document is subject to special export controls, and each transmittal to foreign governments or foreign nationals may be made only with prior approval of U.S. Army Aviation Materiel Laboratories, Fort Eustis, Virginia 23604

43

Disclaimers

The findings in this report are not to be construed as an official Department of the Army position unless so designated by other authorized documents.

When Government drawings, specifications, or other data are used for any purpose other than in connection with a definitely related Government procurement operation, the United States Government thereby incurs no responsibility nor any obligation whatsoever; and the fact that the Government may have formulated, furnished, or in any way supplied the said drawings, specifications, or other data is not to be regarded by implication or otherwise as in any manner licensing the holder or any other person or corporation, or conveying any rights or permission, to manufacture, use, or sell any patented invention that may in any way be related thereto.

Disposition Instructions

Destroy this report when no longer needed. Do not return it to the originator.

ACCESSION for
CFSTI WHITE SECTION ☐
DDC BUFF SECTION ☑
UNANNOUNCED ☐
JUSTIFICATION .....
.....
BY .....
DISTRIBUTION/AVAILABILITY CODES
DIST. AVAIL. and/or SPECIAL
2

DEPARTMENT OF THE ARMY
U. S. ARMY AVIATION MATERIEL LABORATORIES
FORT EUSTIS, VIRGINIA 23604

This report has been reviewed by the U. S. Army Aviation Materiel Laboratories and is considered to be technically sound. The work was performed under Contract DAAJ02-68-C-0019.

The report is published for the dissemination and application of information and the stimulation of ideas in the area of simulation technology, with emphasis on handling qualities research.

Task 1F162204A14233
Contract DAAJ02-68-C-0019
USAAVLABS Technical Report 70-16
April 1970

A STUDY OF V/STOL GROUND-BASED SIMULATION TECHNIQUES

NOR-69-168

By

J.B. Sinacori

Prepared by

Northrop Corporation
Aircraft Division
Hawthorne, California

for

U. S. ARMY AVIATION MATERIEL LABORATORIES
FORT EUSTIS, VIRGINIA

This document is subject to special export controls, and each transmittal to foreign governments or foreign nationals may be made only with prior approval of U. S. Army Aviation Materiel Laboratories, Fort Eustis, Virginia 23604.

ABSTRACT

The use of ground-based flight simulators for establishing the handling quality characteristics of aircraft through correlation with actual flight data is still in the early stages of development. Only qualitative and subjective opinions are available as to the proper level of simulation that gives acceptable fidelity for a given simulation.

The purpose of this study is to provide a definition of the simulation characteristics required to establish the simulator as a reliable and valid tool in the development of V/STOL aircraft and helicopters.

A flight simulator employing the point light source principle to generate a visual display was used in these studies. Previous studies of a jet-lift V/STOL aircraft in this simulator uncovered a pilot-vehicle performance deficiency during lateral maneuvers, resulting in a nausea reaction which limited pilot participation. In the present investigation, human motion perception was studied, and solutions to this pilot-vehicle performance deficiency were evolved by the use of a moving base.

The results demonstrated that effective simulation is possible when certain constraints are observed. The best constraints of the drive mechanism were determined experimentally and were compared with those implied from physiological concepts of human motion perception.

A simulation validation rationale was also developed to assist the pilot in his evaluations. An example of this is described together with a discussion of some limitations.

Pilot head movements, during moving-base operations for the tasks studied, were found to be related to the vehicle motions. Similar head movements were found in flight with a helicopter. Head movements in the simulator during fixed-base operation were different. An explanation is offered based on the eye counterroll reflex and certain concepts of human spatial orientation.

A discussion of a simulation for a large cargo helicopter during up-and-away operations is included, and the effects of vehicle size are discussed.

The basic advantages and limitations of the simulators studied are discussed, and suggestions for future research are given. The conclusion is offered that valid flight simulation can be accomplished with ground-based simulators and that quantitative and subjective data, which closely compare with flight results, can be obtained when certain physiological motion and visual stimuli requirements are met.

FOREWORD

This technical report covers part of the work performed by Northrop Corporation, Aircraft Division, during the period 1 February 1968 to 1 January 1970. It was sponsored by USAAVLABS, Fort Eustis, Virginia under Contract DAAJ02-68-C-0019, and was monitored by Mr. Robert P. Smith of the Aeromechanics Division. The work was authorized by DA Task 1F162204A14233.

The program at Northrop was performed within the Research and Technology Department, with Mr. J.B. Sinacori serving as Principal Investigator.

The author wishes to thank the many people who contributed generously to the effort, particularly Mr. R.M. Gerdes of NASA-Ames, the primary evaluation pilot, and Messrs. H.D. Cooles, R.B. Wilson, and D.M. Patton of the Northrop Aerosciences Laboratory. Particular thanks are offered to Mr. R.L. Scharpf of the U.S. Army, for his criticism, and to Major T.E. West and Mr. D.R. Simon, also of the U.S. Army, who performed more than their fair share of the related evaluations.

BLANK PAGE

TABLE OF CONTENTS

	Page
ABSTRACT	iii
FOREWORD	v
LIST OF ILLUSTRATIONS	viii
LIST OF SYMBOLS	ix
INTRODUCTION	1
IMPORTANT FEATURES OF THE PILOT'S ENVIRONMENT	3
REVIEW OF THE EARLY SIMULATIONS	5
DEVELOPMENT AND USE OF A VALIDATION RATIONALE	6
THE POINT LIGHT SOURCE SIMULATOR FIXED BASE	8
Background Information	8
Effects of Transparency Scale	9
750-To-One Scale	9
80-To-One Scale	9
The Physiological Implications	10
THE POINT LIGHT SOURCE SIMULATOR MOVING BASE	12
Design and Use of a Moving-Base Drive Mechanization	12
Test Results	14
PILOT HEAD MOVEMENTS	16
CONCLUSIONS	17
RECOMMENDATIONS FOR FUTURE RESEARCH	18
LITERATURE CITED	31
DISTRIBUTION	32

LIST OF ILLUSTRATIONS

Figure		Page
1	The Acting Forces for the Lateral Quick-Stop Maneuver	20
2	Block Diagram Representation of the System	21
3	Point Light Source Simulator	22
4	Lateral Plane Motion Drive Mechanization	23
5	Rotational Filter Test Results	24
6	Moving-Base Comparison With Flight for $\omega_p = 0$ Rad/Sec.	25
7	Moving-Base Comparison With Flight for $\omega_p = 0.3$ Rad/Sec.	26
8	Moving-Base Comparison With Flight for $\omega_p = 0.5$ Rad/Sec.	27
9	Moving-Base Comparison With Flight for $\omega_p = 1.0$ Rad/Sec.	28
10	Reference Flight Test Data	29
11	Pilot Head Movements in the Lateral Quick-Stop Maneuver	30

LIST OF SYMBOLS

F_y	-	Aerodynamic side force, pounds
g	-	Acceleration of gravity, 32.2 feet per second squared
Hz	-	Frequency, cycles per second
K_p	-	Motion drive high-frequency gain
m	-	Vehicle mass, slugs
RMS	-	Root-mean-square value
s	-	Laplace transform variable
T	-	Thrust, pounds
v	-	Side velocity, knots
$\dot{V}_{co}$	-	Observed lateral acceleration in the body axis frame of reference, feet per second squared
δ_{SR}	-	Lateral stick displacement
σ	-	Normalized amplitude, ratio of amplitude to the root-mean-square value
τ_p	-	Rotational motion high-pass filter time constant, seconds
τ_y	-	Rotational motion low-pass filter time constant, seconds
φ	-	Vehicle bank angle, radians
$\omega_p = \frac{1}{\tau_p}$	-	Rotational motion high-pass filter break frequency, radians per second
$\omega_p = \frac{1}{\tau_y}$	-	Linear motion low-pass filter break frequency, radians per second

Subscripts

D	-	Display
M	-	Motion

A dot over a quantity indicates differentiation with respect to time.

INTRODUCTION

At this time, no well-established procedures are available for the design of ground-based flight simulators. The main difficulty lies in the understanding of the man-machine interface*. Specifically, it is not possible to predict human responses to the stimuli of an artificial environment which only approximates the real world. In most cases, whether it is realized or not, simulations have been performed using some basic assumptions, both for the mathematical representation of the vehicle and for the relevant human response. The results of ground-based simulation have varied from excellent to poor. For example, the control moment required for a certain task, as determined from a "poor" simulation, is considerably different from what is actually required according to flight test.

Apparent handling qualities observed in a "poor" simulation are also different from those of the simulated vehicle. Obviously, if simulation is ever to become an effective engineering tool, methods must be determined which will allow the design of a simulation for a known or unknown flight environment to an acceptable degree of accuracy.

The approach that is being used here in determining these methods can be summarized as follows:

1. Compare simulator results with flight data, and consider differences in the dominant stimuli.

2. Study the latest concepts and experimental data on human perception.

3. Interpret the interaction of 1 and 2, and formulate assumptions regarding the relevant human perception.

4. Test the assumptions by conducting an experiment with various simulator concepts, and determine simulator performance trade-offs.

5. Extrapolate the results to the unknown vehicles, test when possible, and formulate simulator design criteria.

---

* Specifically, the interface of machine to man, because the man to machine, e.g., "force feel," is relatively easy to represent.

This report summarizes results of studies that follow this approach. Attempts were made to gather data that demonstrated when equivalence between simulator and flight data was high. These data include pilot comments and results of numerical analysis.

A simulation of a jet-lift vehicle was conducted which demonstrated the possibility of obtaining a high equivalence between simulator and flight. Motion stimuli were required for tasks requiring rapid movements. Effects attributed to static forces were also found. No work has been undertaken thus far to extrapolate the results to unknown vehicles, although this work is planned.

IMPORTANT FEATURES OF THE PILOT'S ENVIRONMENT

In order to enhance the discussions to follow, a description of the pilot's environment is necessary. The tasks studied were the precision hover at an altitude of 15 feet while maintaining constant heading, and the lateral quick-start and -stop maneuver. This latter maneuver was a lateral position change starting from a hover. The bank angle was precisely controlled so as to produce the desired vehicle linear acceleration and deceleration corresponding to the desired position change. Heading, altitude, and longitudinal positions were maintained nearly constant. Position changes for the lateral quick-stop maneuver were about 40 feet. During the initial banking portion of the maneuver, the combination of the vehicle's thrust and weight forces resolved to form the side force which accelerated the vehicle. When side velocity was attained, a small negative aerodynamic side force resulted, which, for a velocity of 6 knots, was no larger than 2 percent of the vehicle's weight. Peak bank angles were 12 degrees, peak roll rates were 0.4 radian per second, and peak angular accelerations were about 1.3 radians per second squared. The bank attitude motions occurred at dominant frequencies of 3 radians per second.

The moments were transmitted directly to the pilot; however, the linear forces acting on the pilot were composed mainly of the thrust force. The thrust varied slightly in magnitude as altitude was being held but remained essentially fixed to the aircraft as it banked. This is illustrated in Figure 1.

The consequence of this is that the rotational moments correlate very well with the observed rotational motions; however, the lateral linear forces observed by the pilot in the body axis frame of reference did not correlate with the lateral linear motions of the aircraft in the earth-fixed frame of reference. The situation is analogous to a conventional aircraft initiating a coordinated turn while flying formation close to another aircraft. The observed relative linear motion as the banking aircraft departs sideways from the other aircraft does not correlate with any observed change in linear force on the pilot.

The motions during hover were much less. Peak rotational accelerations were ± 0.15 radian per second squared, peak roll rates were ± 0.07 radian per second, and peak bank angles were ± 2 degrees. Maximum sideways position excursions during precision hover were ± 1 foot. The moment and force effects just described also applied during the precision hover. The forces were nearly the same but the moments were considerably less.

The gust susceptibility of the aircraft used in the study (X-14A) is very low. For this reason, the effects of turbulence were not studied, and the conclusions offered herein are for tasks where there are no external disturbances.

REVIEW OF THE EARLY SIMULATIONS

The early simulations are considered to be a failure because of the inadequate visual displays used. For the representation of the ground, an abstract rectangular outline of a runway was used together with a horizon display. No texture was included, and nonlinear operation of the display for small movements was apparent to the pilot. However, the large-amplitude sinusoidal response was adequate. The scene as described was projected on the back of a wide translucent screen which was placed about ten feet in front of the pilot's eye station. Cockpit rotational motion programmed one to one about the approximate reference center was used for the rotational degrees of freedom. No linear motions were used. Cockpit features such as manipulator forces, instrumentation, and visibility were represented accurately.

The comments of the pilot were unfavorable because of the lack of a strong visual environment. The evaluation of the attitude control characteristics proceeded with the pilot projecting the vehicle motions from the attitude response he observed since he did not have realistic position information.

The detailed results are reported in Reference 1.

DEVELOPMENT AND USE OF A VALIDATION RATIONALE

The validation rationale described here is simply an equivalence criterion. In Figure 2 an oversimplified block diagram of the problem elements is presented to illustrate their interaction. The representation is for the lateral plane only, although the concept is general. The simulation complex here is composed of the real time computer mechanization which solves the dynamical equations for the vehicle motions and the pilot stimulus generator, the simulator itself. It is assumed that a mathematical representation of the vehicle exists, so the problems of validating these equations will not be discussed. The other component, the simulator, receives outputs from the computer and supposedly generates the stimuli pertinent to the problem. The pilot in this situation receives task commands and attempts to execute them by reference to his memory and the stimuli generated. A pilot with recent experience in the reference aircraft is required.

The intent is that the simulation complex be representative of the vehicle. Considering the purposes of the research simulator, the word "representative" is taken here to mean dynamically equivalent. Simple proof of this equivalence is the matching of time histories for selected variables such as manipulator position, body rates, attitudes, and position when the pilot accepts the total illusion as representative of the situation. In this sense, the pilot serves as an analyzer by comparing his workload, scanning pattern, feelings, and general well-being with those of the corresponding flight situation.

Unfortunately, time histories of selected variables are difficult to sequence accurately enough for a simple comparison, if at all. To overcome this difficulty, the time histories are sampled statistically, and the results are reduced to power spectral density and probability density distributions. Comparison of these distributions comprises the test for equivalency.

The sequencing problem may be alleviated by the use of a tape recorder. The pilot can practice a series of maneuvers in the aircraft while commenting to the recorder. The tape recorder can be carried into the simulator and the maneuvers can be repeated while listening to the recording made during flight. If the tape is synchronized with the recording of the aircraft and manipulator variables, then direct comparison may be possible. This procedure has not been attempted yet.

Use of the same pilot reduces the variability among pilots. However, the intertrial variability is present and contributes to the fundamental limiting accuracy. Some data gathered thus far for the X-14A vehicle were reduced and analyzed using an electronic wave analyzer. The low-frequency data were transcribed to tape loops, and speed scaled to the higher frequencies required by the machine. Splice points were carefully chosen so as not to introduce additional error. Filter bandwidth was chosen between 0.05 and 0.1 Hz, depending on the sample record length. The record lengths were at least 40 seconds for the hover task and 35 to 40 seconds for one cycle of a lateral quick-stop maneuver. Where possible, more than one cycle was used to increase the sample length. The data for the lateral maneuver were to some degree periodic. The choice of the electronic method was made for economic reasons. No detailed error analysis was undertaken, and therefore no confidence statements can be made now. The comparison of the power spectra and probability density distributions was made subjectively. It is felt that the crude way in which the data were processed did not warrant a more detailed error analysis, especially considering that pilot opinion was also available.

Work has been undertaken to increase the number of samples and to incorporate more refined analysis techniques, including confidence statements regarding spectral equivalence. The data acquisition is being improved also.

The recognized deficiencies in the analysis method used here are not offered as an excuse for ignorance, but rather are taken as encouragement to refine the methods, especially considering that the preliminary results appear to be reasonable.

The validation rationale is summarized below. Dynamic equivalence between a vehicle and a simulation of that vehicle is established when the following conditions are satisfied:

1. Power spectral density and probability density distributions for the pilot's manipulator (and other variables) are equivalent to those for flight.

2. The vehicle motions, workload, and sensations appear to the pilot to be identical to those in flight.

3. The same pilot performs the same tasks in both simulator and flight.

Validation of the X-14A simulation was carried out using the criteria just described.

THE POINT LIGHT SOURCE SIMULATOR FIXED BASE

BACKGROUND INFORMATION

At the conclusion of the early experiments, a point light source visual display system with a fixed cockpit became available. It was decided to attempt a final simulation in the hope of attaining positive results.

The point light source simulator used (Northrop Rotational 3-Axis Flight Simulator) is shown diagrammatically in Figure 3. Basically, a flat transparent plate decorated with airport features such as runways, taxiways, control towers, etc., was mounted just below an intense point light source. A spherical screen of 12-foot radius, whose center coincided with the light, extended 200 degrees around and ± 30 degrees above and below a cockpit placed just beneath the plate. The shadows cast on the screen by the transparent objects represented the scene as viewed from the light. The resulting visual scene representation of the transparency constituted the visual display. To create the visual illusion of movement, the transparency was hydraulically driven in six degrees of freedom. A body-to-earth transformation was required to drive the hydraulic actuators. Two transparency scales were used; they were 750 to one and 80 to one. The 750-to-one plate contained the airport scene; the 80-to-one plate contained only an abstract grid. Small-angle assumptions were made in computing the north-south and east-west velocities. Altitude rate computations were exact. These velocities were integrated, and a combination of velocity and position was fed to each actuator in order to achieve matched dynamic response for all actuators. The bandwidth of the system was approximately 2 Hz.

A cockpit configuration representing the same jet-lift vehicle was installed and integrated with the computers. The computers were programmed with equations of motion which were validated using flight-test data for the lateral quick-stop maneuver and the precision hover. These equations were also validated using full-scale data from the Ames 40- by 80-foot wind tunnel. The research pilot who flew the flight test evaluated the simulation. All "flights" were recorded on magnetic tape to facilitate playback for analysis purposes. Pilot comments were also recorded. The complete "flights" could be played back later for the benefit of the principal engineer observing from the cockpit. The maneuvers of interest were electrically marked and transcribed from the tape for analysis.

The detailed results are presented in Reference 1. The highlights will be described here. No significant training time was required by the pilot, and it was observed that lift-offs and mild maneuvering were possible immediately.

The visual illusion of flight was described as very good by the pilot, and the visual scene was considered to be very representative in its gross aspects. As evaluation progressed, however, certain deficiencies in the display became apparent.

EFFECTS OF TRANSPARENCY SCALE

750-to-One Scale

Thresholds at this scale resulted in unrealistic hovering performance. Close to the ground, resolution decreased rapidly, and the visual illusion deteriorated. Occasional excitation of a high-frequency transparency mode momentarily destroyed the illusion. Altitude and pitch attitude cues were confusing at low altitude.

Pilot-vehicle performance was poor. Attitude controllability did not resemble that in flight, and position controllability was compromised by the servo thresholds. The power spectral and probability density distributions for the lateral stick position during the precision hover, and the lateral quick-stop maneuver did not appear to match those from flight, and the pilot reported nausea, particularly during the lateral quick-stop maneuvers. Oscillatory attitude behavior was reported by the pilot during the attitude reversals. Inadvertent head movements were also observed.

80-to-One Scale

Hover controllability resembled that of the aircraft. Position accuracy also was similar, and the pilot reported the whole illusion of hovering to be quite similar to flight. The power spectral and probability density distributions for the lateral stick position appeared to match those from flight reasonably well for the precision hover task. The observed handling qualities were similar to those of the aircraft. Some pitch-altitude confusion persisted.

Results for the lateral quick-stop maneuver, however, were discouraging. Attitude controllability was reported as poor, with frequent oscillatory behavior during reversals. Position overshoots resulted and severe nausea was reported, especially during attitude reversals. Power spectral density and probability density distributions for the lateral stick position did not appear to match those from flight, with the most notable difference being a large increase in the energy of the spectrum of the simulator record at frequencies of 0.5 Hz. The nausea reported persisted during the periods of reduced activity and increased each time a maneuver was attempted until the "flight" was terminated due to acute pilot discomfort. Inadvertent head movements were again observed, especially during the attitude reversals. The head movements were not recorded during this simulation. Brief periods of disorientation were also reported.

THE PHYSIOLOGICAL IMPLICATIONS

The hover representation achieved with the 80-to-one transparency was due to the choice of transparency scale, which reduced the vibratory excitation of the plate by an order of magnitude and offered position change information accurate enough for the precision hover. The pitch-altitude confusion persisted, but since the task was in the lateral plane, this deficiency was not considered to be serious for the study. For a longitudinal plane task, such as a forward quick start and stop, difficulty could be expected. This coupling is explainable when the optical characteristics of the projector are examined. These will be discussed later.

A closed-loop analysis was conducted in an attempt to determine the orientation information required for the pilot to accomplish the desired tasks, and to try to explain the observed pilot-simulator performance. The results demonstrated that the insufficient ability to detect roll rate at frequencies of 0.5 Hz could easily account for the observed performance. The available literature on physiology contained many references (for example, Reference 2) to the bandwidth of the human visual system, and the performance predicted by the closed-loop analysis when only a visual pathway is included agrees reasonably well with the observed performance.

Therefore, the inference is that the vestibular pathways are also employed for this task because it is known that an accurate sensation of angular roll rate can be evoked by the vertical semicircular canals at frequencies of 0.5 Hz. The utricular pathways for these tasks are hardly stimulated at all, because the observed lateral forces at the pilot's head are due to the rolling moment (the head is approximately two feet above the roll center) and a small aerodynamic side force which is a maximum of approximately 2 percent of the vehicle's weight.

If reflexive types of head movements had been correctly reproduced in the simulation, the conclusion might be drawn that reduced stimulation of the vertical semicircular canals resulted which is different from flight. Compensatory eye movements therefore did not occur correctly either, and the question naturally arises concerning the correctness of the visual pathway stimuli. As it turned out in the moving-base experiments later, head movements were observed, which further complicated the issue.

The onset of nausea during the roll reversals may be the result of stimulus comparison in the higher association centers, which is recognized as being in conflict with the precognitive information. Some evidence to support this premise is the absence of nausea when two inexperienced pilots performed nearly the same tasks.

It is emphasized here that the absence of the semicircular canal pathway stimulus resulted in poor performance and nausea. It is therefore very likely that the reason for good performance during the hover task (at an 80-to-one scale) is that the visual pathways alone are adequate.

The further inference is that a pilot-vehicle response which can be forced to the necessary bandwidth without the need for high-frequency rate detection will not require vestibular stimulation. Such a system will have good performance but may still be disorientating and nausea-inducing. These deductions require further research.

The case has been made for the inclusion of vestibular stimulation, and moving-base experiments were created to study this problem. Three basic assumptions were made here to facilitate the design of the moving-base drive:

1. Rotational motion stimuli are necessary at frequencies between 0.2 and 10 radians per second, the apparent bandpass of the semicircular canals.

2. Force stimuli are necessary to frequencies from zero to the bandwidth of the aircraft's lateral motions, namely, about 0.2 radian per second*.

3. The bandwidth of the visual information is the bandwidth of the simulator actuators.

---

* The approximate bandwidth reported for the utricles is 1.5 radians per second which is compatible with the 0.2 of the aircraft.

THE POINT LIGHT SOURCE SIMULATOR MOVING BASE

DESIGN AND USE OF A MOTION BASE DRIVE MECHANIZATION

As a consequence of the fixed-base results, a study was conducted to achieve several drive mechanizations for a motion base which was installed in place of the fixed cockpit. The motion system had five degrees of freedom - pitch, roll, yaw, heave, and surge - with the following limits:

pitch	-	± 12°
roll	-	± 15°
yaw	-	± 7°
heave	-	± 0.5 foot
surge	-	± 0.5 foot

Before proceeding with a description of the drive mechanization that evolved from the study, a discussion of constraints is necessary.

The visual display will give the correct apparent transformation of visual coordinates and velocities only if viewed from the center of the spherical screen. Since the light occupies this point, a position below this point is the usual position of the pilot's eye center. Distortions which are a function of the vehicle orientation, the position of the pilot's eye center with respect to the screen, and the screen radius are therefore introduced into the display. The pitch-altitude confusion described earlier results from this. The distortions are minimized when the pilot's eye center is closest to the spherical screen center and when the screen radius is large. The distortion takes the form of a position distortion, which means that errors in the derivatives (velocity, etc.) exist also.

Subjective pilot comments on the visual display were always favorable; however, in order to minimize the distortion, the pilot's eye station was kept as close to the sphere center as possible and the pilot's head movements were kept small. For this reason, only the pitch, roll, and yaw degrees of freedom of the motion base were used.

The motion base drive mechanization for the lateral plane is shown in Figure 4. This mechanization attempted to do the following:

1. Provide semicircular canal stimulation at frequencies where the stimulus corresponds nearly to perceived angular velocity, namely, 0.2 to 10 radians per second.

2. Provide utricular stimulation at low frequencies only, i.e., up to 0.25 radian per second.

3. Minimize false stimulation of the vestibular organs and maintain low-frequency postural reflexes.

The mechanization attempted to do this by the use of simple filter networks used with computed quantities from the dynamical equations for the vehicle. Rotation of the simulator cockpit, exactly like the aircraft cockpit, resulted in apparent linear accelerations which were a function of the simulator attitude. Since these linear accelerations comprised a false stimulus, a high-pass network was used to reduce the attitude at a rate which was not detrimental to the performance of the pilot-simulator system, considering the resulting utricular stimulus. At the same time, computed apparent linear accelerations at the pilot's seat station were used to tilt the simulator cockpit to an attitude that reproduced the computed linear accelerations at a rate which was not detrimental to the performance of the pilot-simulator system, considering the resulting semicircular canal stimulus.

The remaining portions of the mechanization were designed to give accurate visual stimuli at frequencies up to the simulator bandwidth (2 Hz) and to provide compensating inputs in order to achieve dynamic response matching for all actuators. The display corrections, due to the pilot eye station location two feet above the center of gravity of the vehicle, were not programmed because their values were of the order of the visual display distortions at an altitude of 15 feet.

Estimates of the drive filter constants ω_p and ω_y consider that the dynamics of the vestibular organs are the only operative processing that takes place in the pathways to the brain. ω_p and ω_y are assumed to be related to the long time constant of the semicircular canals (for the corresponding axis). The estimates yield a value of 0.1 to 0.3 radian per second for ω_p. The value of ω_y is necessarily nearly the same.

TEST RESULTS

To test the empirical prediction, evaluations by the same research pilot were conducted using the same basic simulator setup, with the inclusion, however, of the motion drive mechanization. Before proceeding with the evaluation, a brief experiment was conducted with four more pilots to determine if an improved visual display incorporating a helipad with familiar objects would reduce the nausea. It was thought that the visual distortions emphasized by the grid pattern contributed to the nausea and that a more realistic scene with less stark features might be better. Such a transparency was built and evaluated with and without the motion base operating. For these tests, the motion base drive constants ω_p and ω_y were set at 0.3 and 0.25 radian per second, respectively. The results showed that the greatest reduction (or, in most "flights," complete elimination) of nausea was obtained with the motion base operating and that the improvements in the visual display had a minor effect.

Following these tests, the primary evaluation was conducted using the same research pilot employed in the fixed-base tests. The results are summarized in Figure 5 and are presented as overall root-mean-square values of lateral stick position in terms of percentage of full travel plotted versus rotational filter break frequency ω_p. A value of zero for ω_p corresponds to an infinitely long return time, while a value of infinity corresponds to a fixed-base operation. The flight-test value of 11.4-percent RMS is presented also. Pilot comments are included also and were favorable at values of 0.3 and 0.5 radian per second. For an ω_p of 1.0, considerable difficulty with oscillatory behavior was expressed by the pilot during the attitude reversals, and nausea was reported.

Interestingly enough, for $\omega_p = 0$, the linear force stimulus resulting from not returning the cockpit to level for a constant bank was immediately sensed by the pilot and was reported as a false cue. However, because it was correlated with attitude, the total illusion was that of a better handling aircraft, which suggests that the utricular pathway was being used in the simulator, whereas it was not in flight, thus giving erroneous results.

The resulting power spectral and probability density distributions of lateral stick position for the four cases investigated are compared with the flight results in Figures 6, 7, 8, and 9. The flight results are shown in Figure 10. Note the poor comparison for $\omega_p = 0$ and $\omega_p = 1.0$ and the good comparison in the range from 0.3 to 0.5 radian per second. For these tests, a value of $\omega_y = 0.25$ radian per second was maintained.

The aircraft used for this validation generated almost zero apparent side force for the tasks studied, and for this reason the empirical testing of this drive mechanization for ω_y is not considered to be very meaningful.

The intertrial variability for the research pilot who contributed to this research was examined during related tests on the same simulator. The maximum variation from the mean root-mean-square value for six trials was 12 percent. Unfortunately, only one sample was taken at each condition. This value is thought to be consistent with the error incurred during data acquisition and analysis.

PILOT HEAD MOVEMENTS

Due to inadvertent-appearing pilot head movements which were noted during the fixed-base simulation, pilot head movements were measured using a helmet-mounted rate gyro aligned with the sensitive axis of the vertical semicircular canals (an axis inclined 28 degrees from the saggital axis) for the moving-base simulator. The measurements showed clearly that compensatory head movements occurred during the lateral quick-stop maneuver which for moving-base operation tended to reduce the total inertial rolling of the head. Specifically, when peak bank angles were below 5 to 6 degrees, the head remained fixed to the cockpit. When the peak bank angles exceeded 5 to 6 degrees, a countering head movement was observed which limited the inertial roll to less than 5 degrees. For fixed-base operation, the movement was reversed, i.e., the head tended to follow the display, which moved in the opposite direction to the direction of rolling. The sequence is illustrated in Figure 11. The same pattern of head movements was observed by the author as five different pilots performed the same task while piloting a helicopter. For this reason, it is deemed most interesting that such a phenomenon should occur, and a bit of speculation is therefore warranted.

The simple explanation of a postural reflex (Reference 2) requires that a sizable lateral force be present, but it is not. Could it be, therefore, that this occurrence of rolling above, but not below, 6 degrees is related to the 1g counterroll limit of 5 to 7 degrees? If so, then one would surmise that the effect is designed to provide eye counterroll for purposes of retinal image stabilization so as to enhance the process of orientation. It is possible that the neck receptors are also contributing useful information to the brain. It may be a learned reflex; however, this seems doubtful since the eye counterroll reflex undoubtedly is used during our everyday lives. It is the author's opinion that head-rolling movements are used to achieve retinal image stabilization when the external rolling of the vehicle is small enough not to cause neck discomfort. The resulting visual and neck receptor information is then used to maintain the reference stable visual environment. When the external rolling is great, requiring considerable head movements with respect to the torso, it is not possible to stabilize retinal images, and the reference stable environment is changed by the brain. When external rolling is less than the counterroll limit, no compensating head movements are needed to achieve retinal image stabilization. The effect is also believed to be a high-frequency phenomenon.

In future simulations, it is intended to measure pilot head and eye movements more closely in the hope of collecting and analyzing data to better understand this phenomenon.

CONCLUSIONS

Experiences with several types of simulators were described in order to show their suitability to adequately represent the flight maneuvers studied. For the visual conditions corresponding to the flight tasks, the early simulations were considered to be a failure because the visual stimuli were inadequate. It is concluded, therefore, that an abstract display consisting of a runway outline and a sharp horizon does not give the visual information required for the precision hover and lateral maneuvering tasks. However, the degree of abstraction required is still an open question.

A validation rationale that uses random data analysis techniques to support pilot opinion was described. This rationale appears to be able to determine when a simulation is adequate. The criterion for adequacy is dynamic equivalence between the simulator and the reference vehicle. However, the random data analysis techniques employed in this study were electronic in nature, were cumbersome, and tended to contaminate the data.

Detailed studies of the point light source type of simulator with fixed base are reported where the validation rationale was applied. It was found that hover operations could be adequately represented if the projection scale is chosen properly. The lateral maneuvers could not be adequately represented due to physiological factors related to the absence of motion. Nausea was also induced.

The possible physiological factors that produced an inadequate fixed-base representation were studied in order to design an effective motion-system drive mechanization. The resulting mechanization was used to drive a three-degree-of-freedom motion base which was added to the basic point light source simulator. The best motion base drive constants were determined using the validation rationale. The results using the best constants compared very favorably with flight, and the nausea was significantly reduced or, in most cases, completely eliminated. The best constants were shown to be compatible with the dynamics of the vestibular organs.

Pilot head movements in the fixed- and moving-base point light simulator were examined and found to be correlated with the maneuvers. Movements similar to those with the moving base were found in flight with a helicopter. An explanation of these movements based upon speculation of the function of the counterroll reflex was offered.

RECOMMENDATIONS FOR FUTURE RESEARCH

If one accepts the idea of compromising the rotational stimuli in favor of improving the linear force stimuli, then it is possible with a large-amplitude linear motion simulator to reproduce the exact apparent force orientation with respect to the cockpit reference frame. Sustained changes in the magnitude of the apparent force are, of course, impossible without unwieldy motion systems.

The physiological research directed at the semicircular canals is noteworthy. Less research has been devoted to the utricles and saccules (Reference 3), which has resulted in a rather incomplete view of the role of these sensors in the perceptual process. There may very well exist a dependency of the pilot's response on a knowledge of the stimulus, especially in the presence of a visual environment, which is exactly the case during flight in an aircraft.

Several questions may now be asked. What role do the linear force sensors play in the organization of orientation information in the central nervous system in the presence of a gravitational force? What frames of reference are possible under the influence of a gravitational and an external force? What are the effects on orientation during periods of reduced or absent gravitational force? Can the human really distinguish between the two kinds of forces? Can the human construct effective information regarding his environment when the stimuli are in conflict during flight? Until some answers to the question of the force sensor role in the nervous system are found, the practicing simulator engineer will decide that it is advantageous to attempt exact force simulation at bandwidths up to that of the vehicle.

Along these lines, a simulation conducted jointly by Boeing-Vertol and Northrop may serve to illustrate this point. The vehicle simulated was a large cargo helicopter where the pilot's seat station was located 18 feet forward of the center of gravity. Therefore, the force response at the pilot's station was the moment response with complications due to rotor lead-lag and aerodynamic effects. This simulation was conducted on a large-amplitude device and demonstrated that the pilot does use high-frequency (above 0.2 radian/second) force stimuli. The detailed results are reported in Reference 4.

The results presented, using the jet-lift vehicle data, apply when the pilot is near the center of gravity, where the force bandwidth is low. When the force bandwidth is not low, as in the case of the large vehicle (with high pilot offset), the force-sensing characteristics of the pilot appear to be extremely important. The force sensations may act to

decrease pilot time delay in multiloop environments; thus onset alone may be the underlying factor. On the other hand, the low-frequency gain which is known to exist in the perception of tilt (considering habituation effects) in a gravitational field may demonstrate a wider use of the linear force-sensing organs. The results of the Boeing-Vertol simulation illustrate these effects. Certainly, some additional work is necessary before large-amplitude motion systems for simulation can be designed. A great deal of evidence has been collected during the performance of this simulation, and it is hoped that fruitful interpretation of the results will follow.

In order to provide a continuous flow of research information which will lead to the establishment of accepted procedures for simulation testing, the following research is recommended:

1. Use existing large-amplitude motion systems in conjunction with good visual displays to determine the requirements for simulation of vehicles with sizable offset-center-of-gravity pilot stations.

2. Continue research on visual display quality and dynamic requirements.

3. Continue research on human sensory processes with emphasis on the linear force sensors and the processing of the information from all sensors to the higher centers of the nervous system.

4. Develop automated digital data acquisition and processing techniques.

5. Develop digital servomechanisms which could interface directly to a digital computer.

6. Continue the development of mathematical representations of vehicles and auxiliary effects such as ground contact dynamics, turbulence, low-velocity forces, and moments on fuselage shapes using hybrid computers.

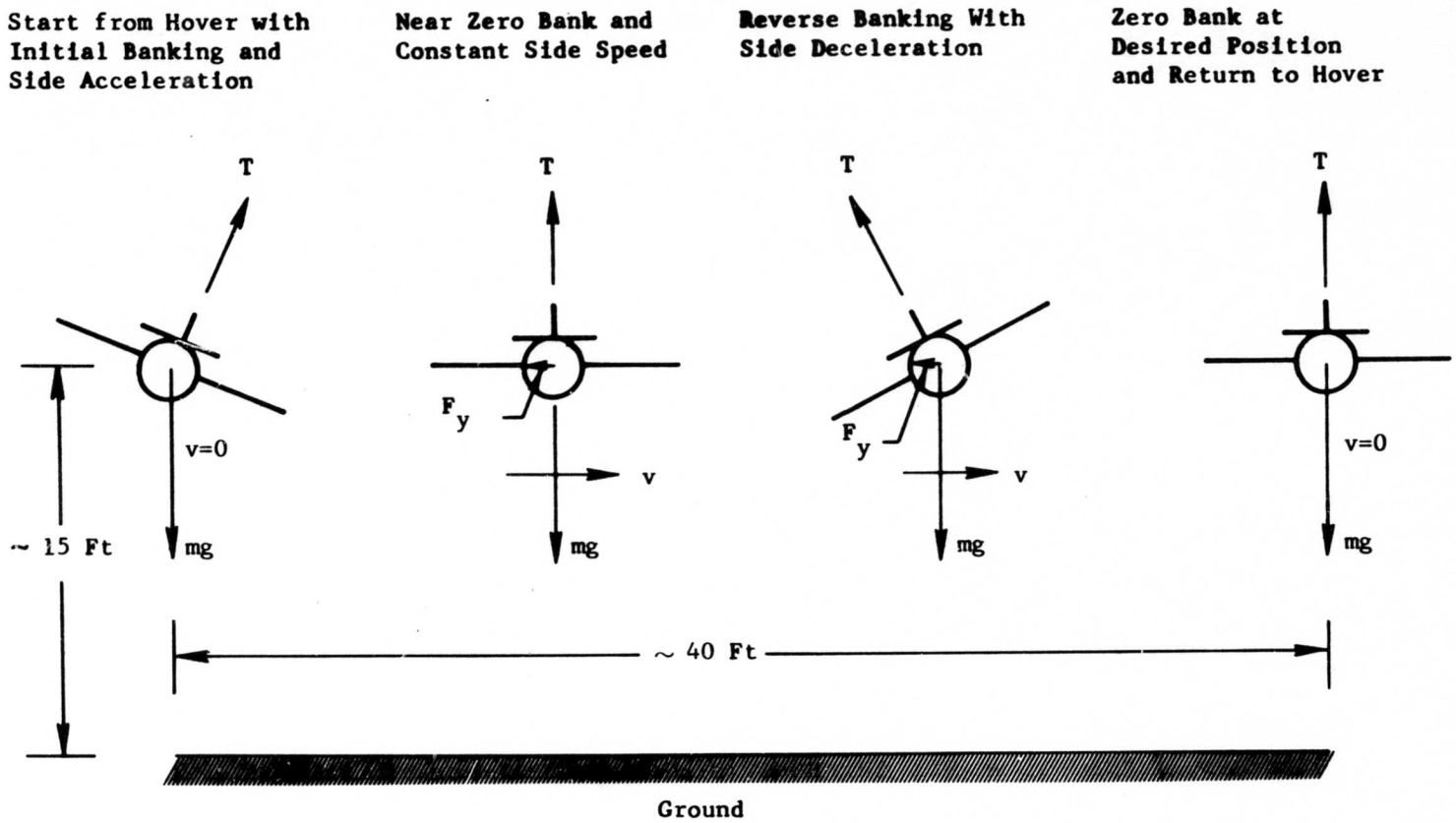

- o Pilot Feels Moments
- o Pilot Feels Thrust + Aerodynamic Forces (Which Remain Nearly Fixed to the Aircraft)

Figure 1. The Acting Forces for the Lateral Quick-Stop Maneuver.

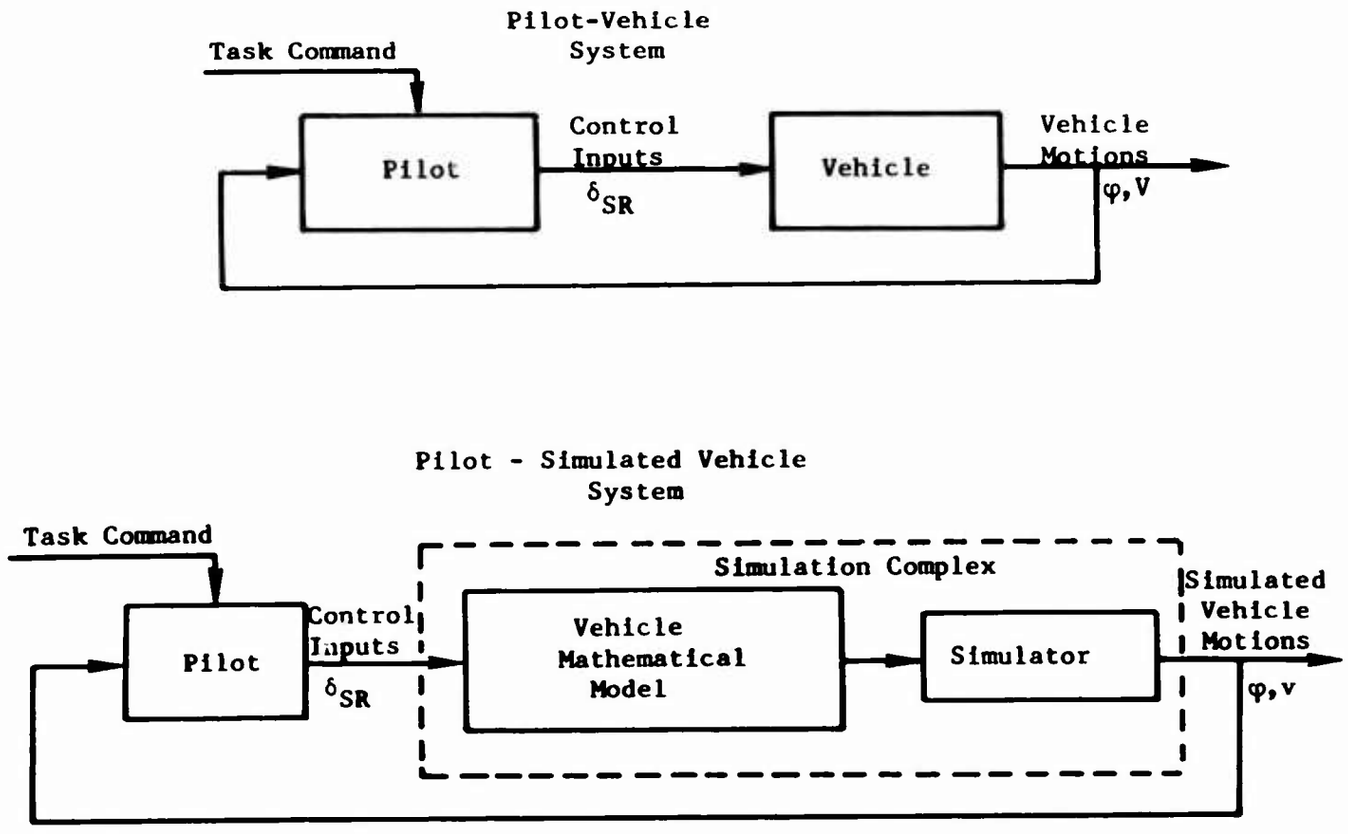

Figure 2. Block Diagram Representation of the System.

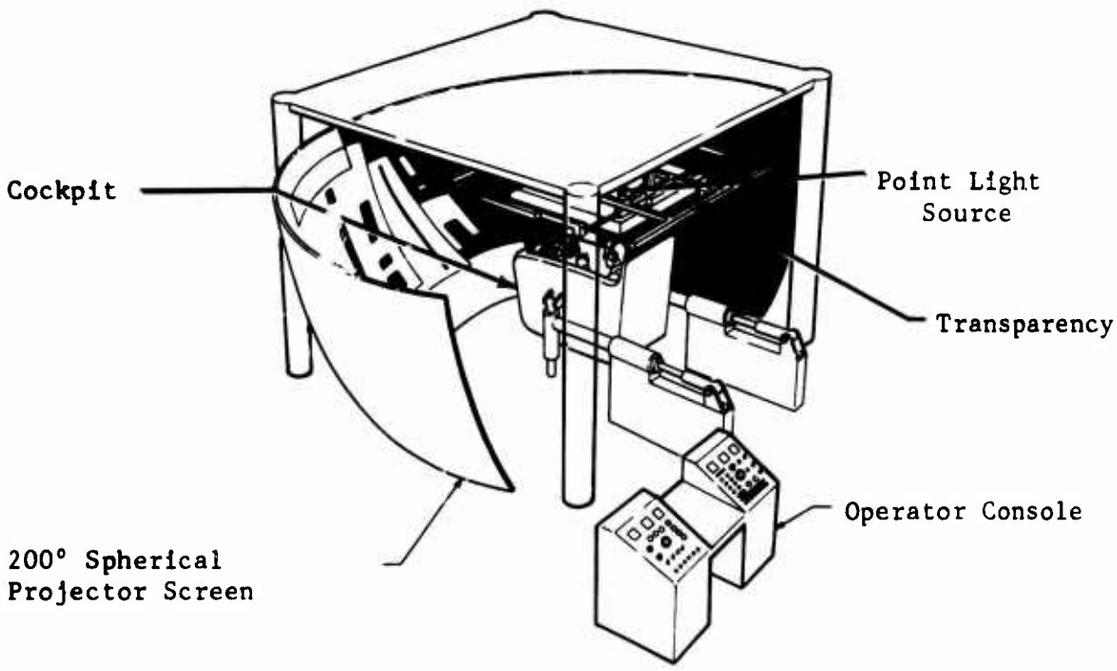

Figure 3. Point Light Source Simulator.

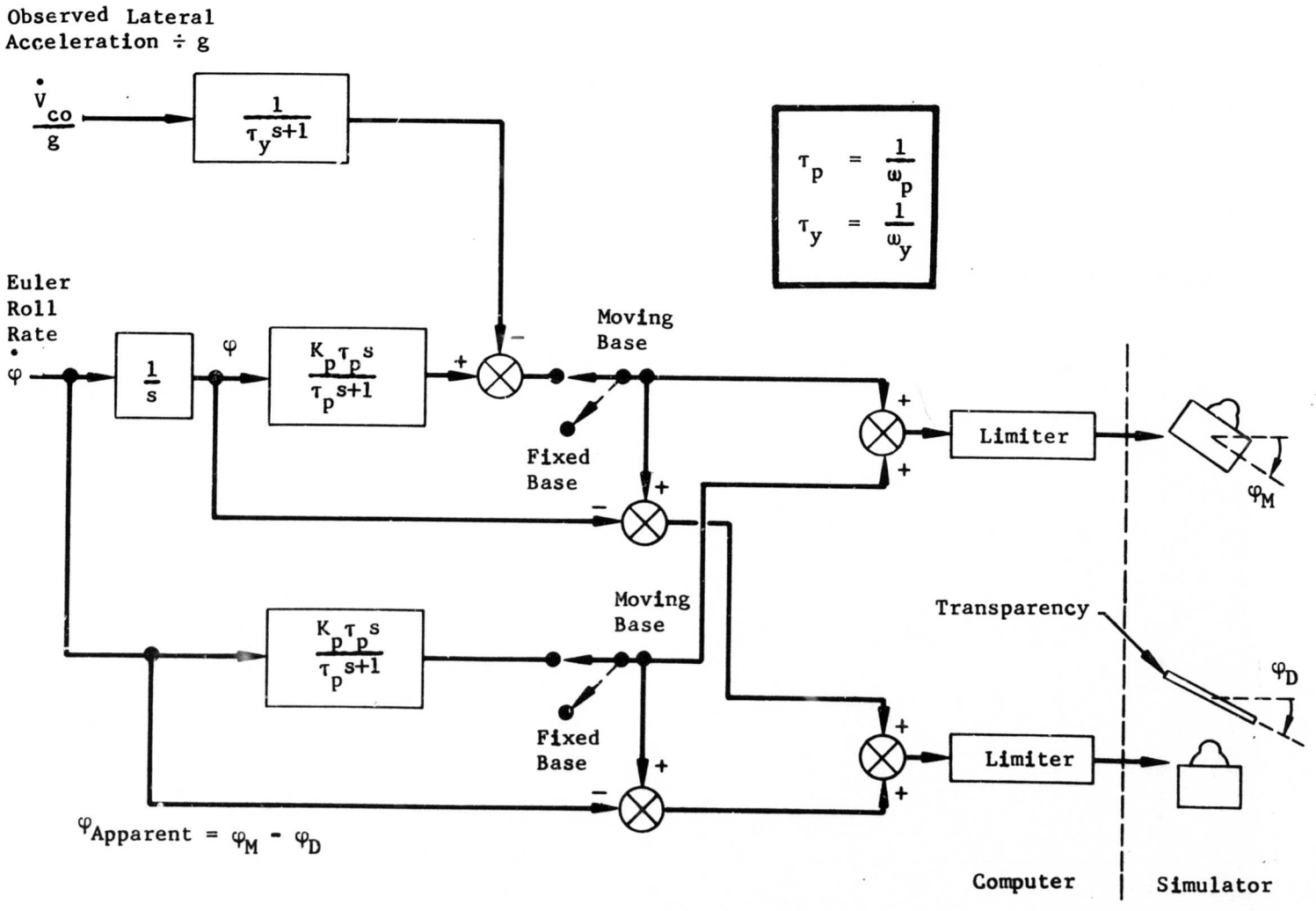

Figure 4. Lateral Plane Motion Drive Mechanization.

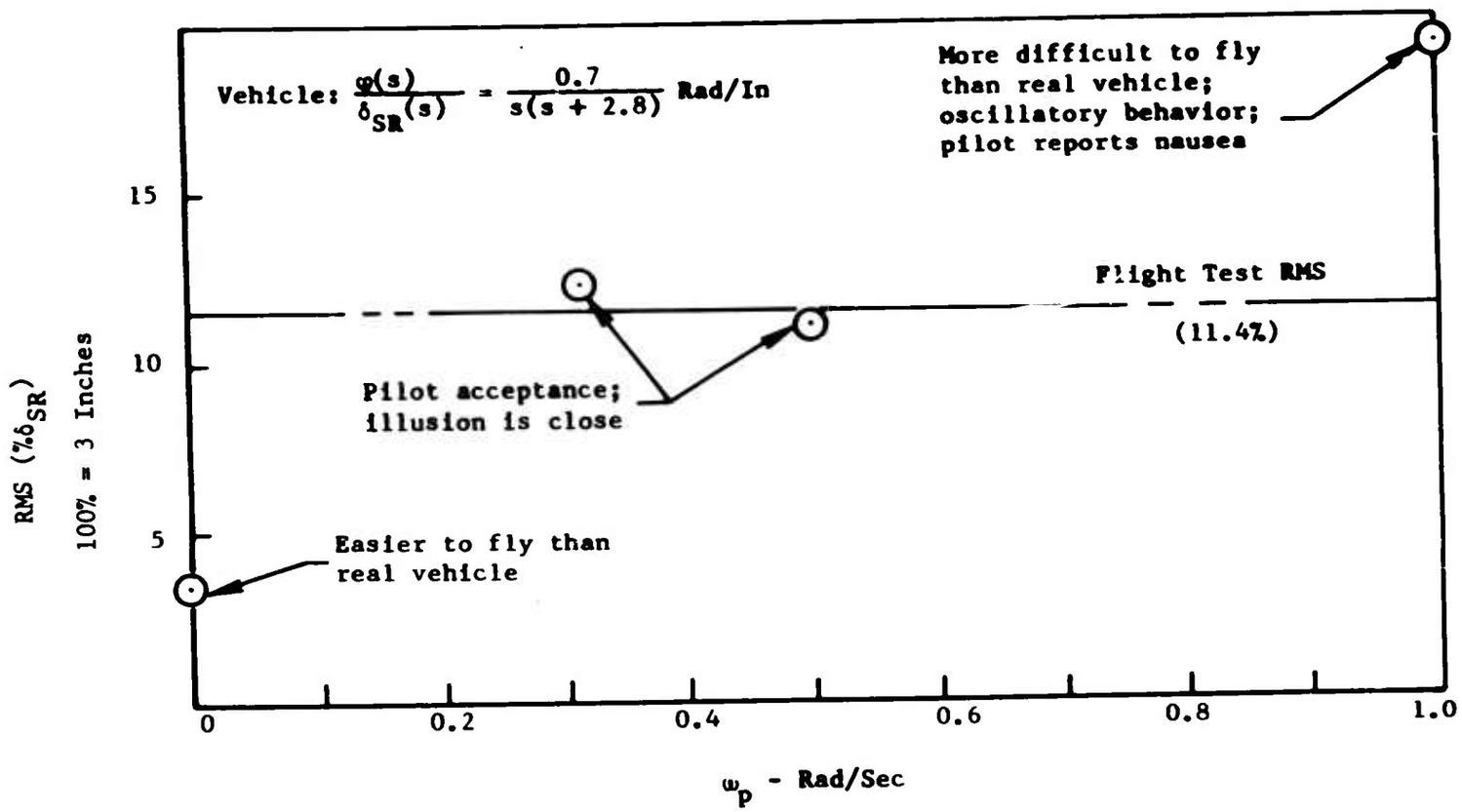

Figure 5. Rotational Filter Test Results.

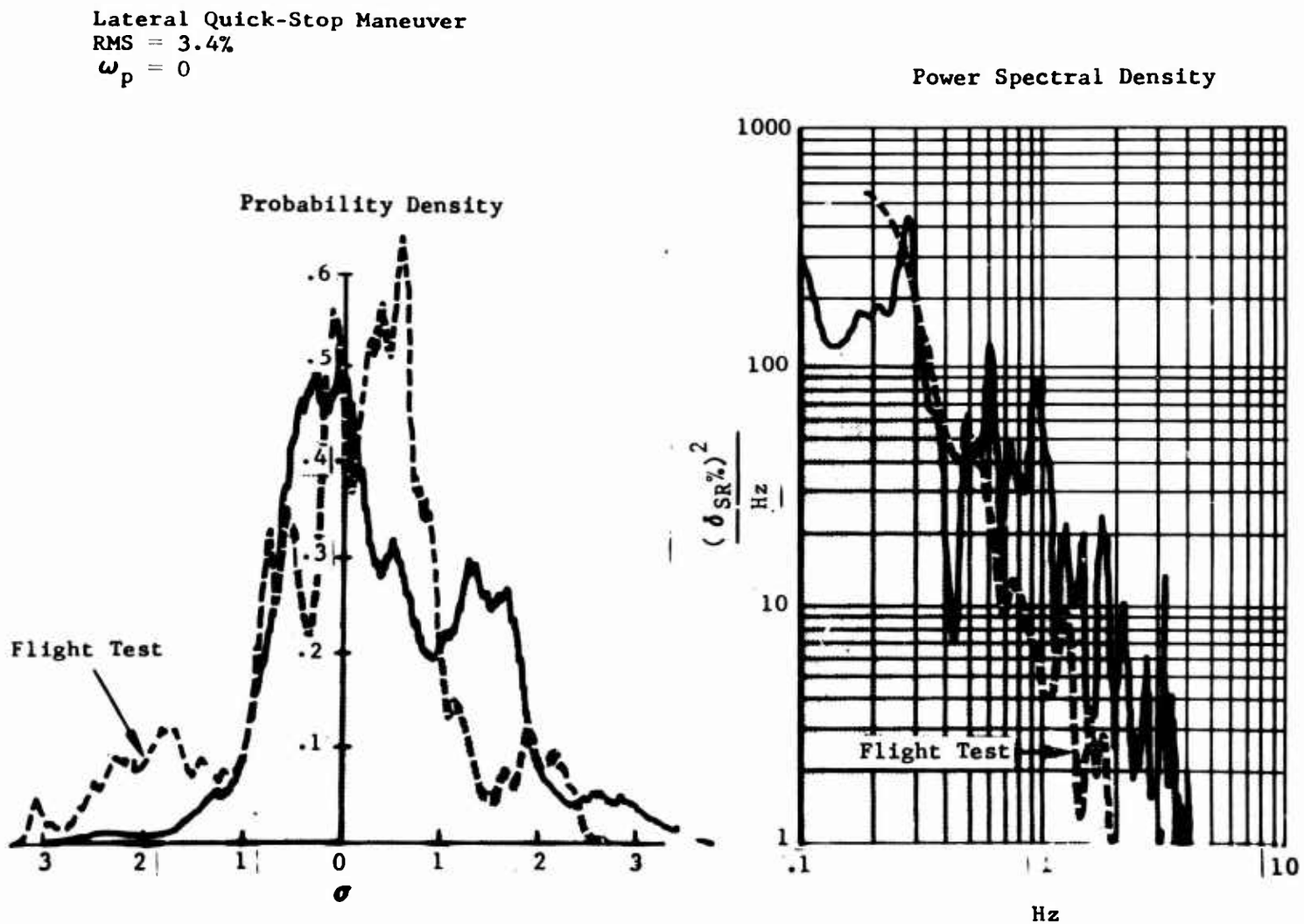

Figure 6. Moving-Base Comparison with Flight for ω_p = 0 Rad/Sec.

Lateral Quick-Stop Maneuver
RMS = 12.5%
ω_p = 0.30 Rad/Sec

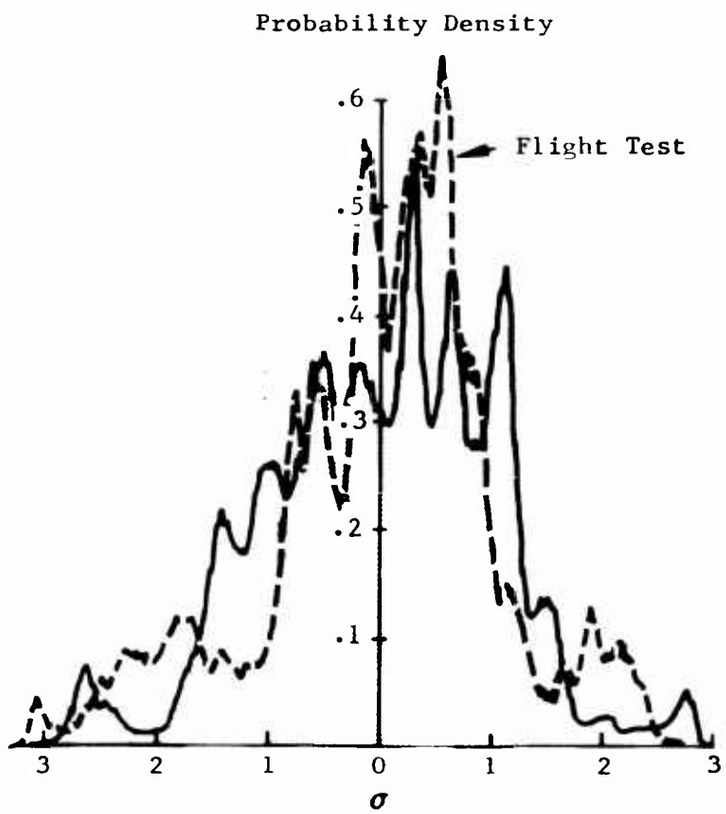

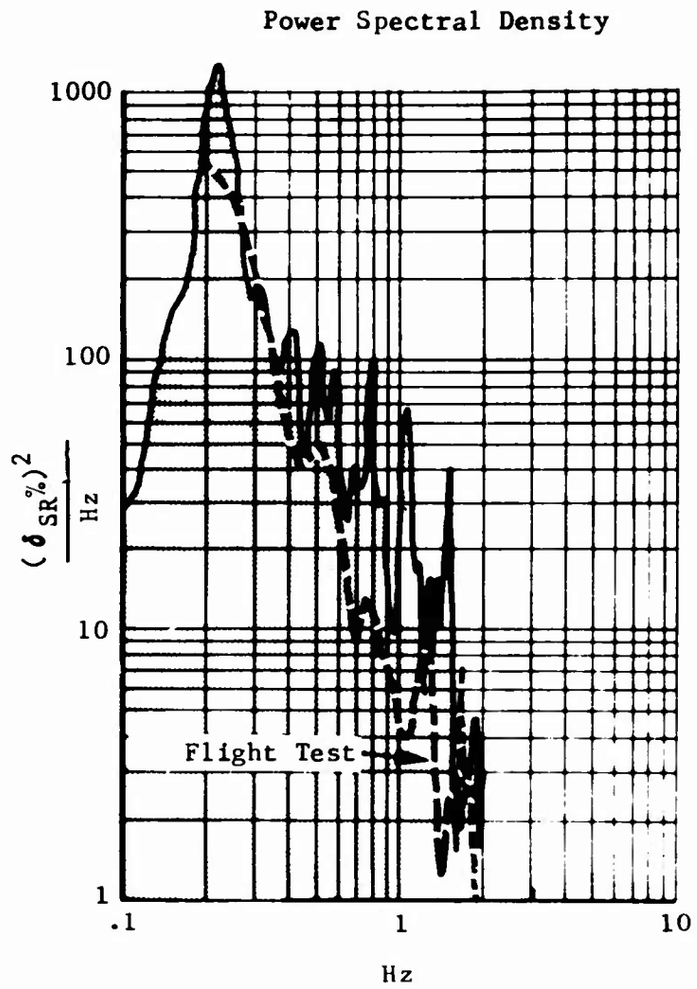

Figure 7. Moving-Base Comparison with Flight for ω_p 0.3 Rad/Sec.

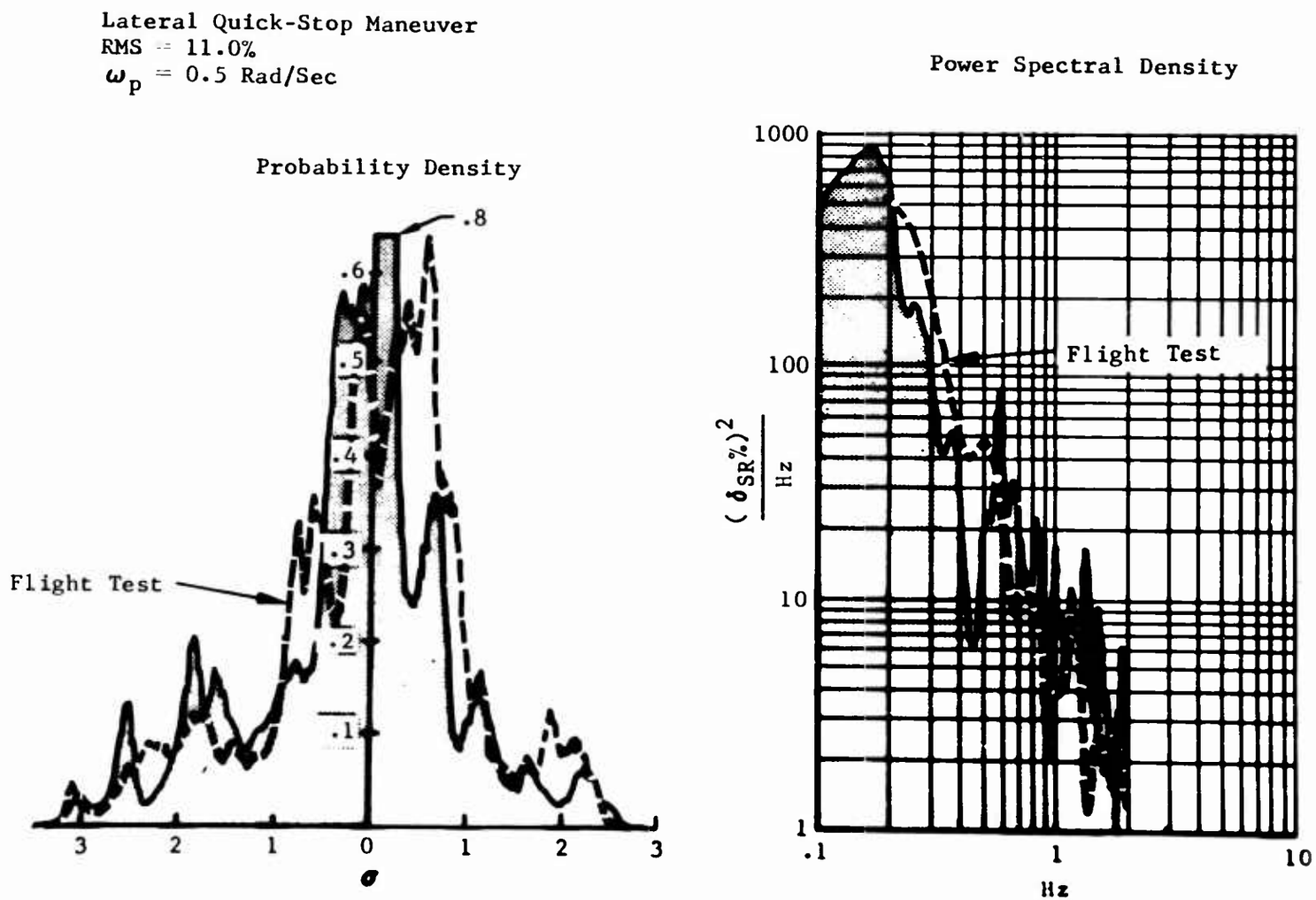

Figure 8. Moving-Base Comparison with Flight for ω_p = 0.5 Rad/Sec.

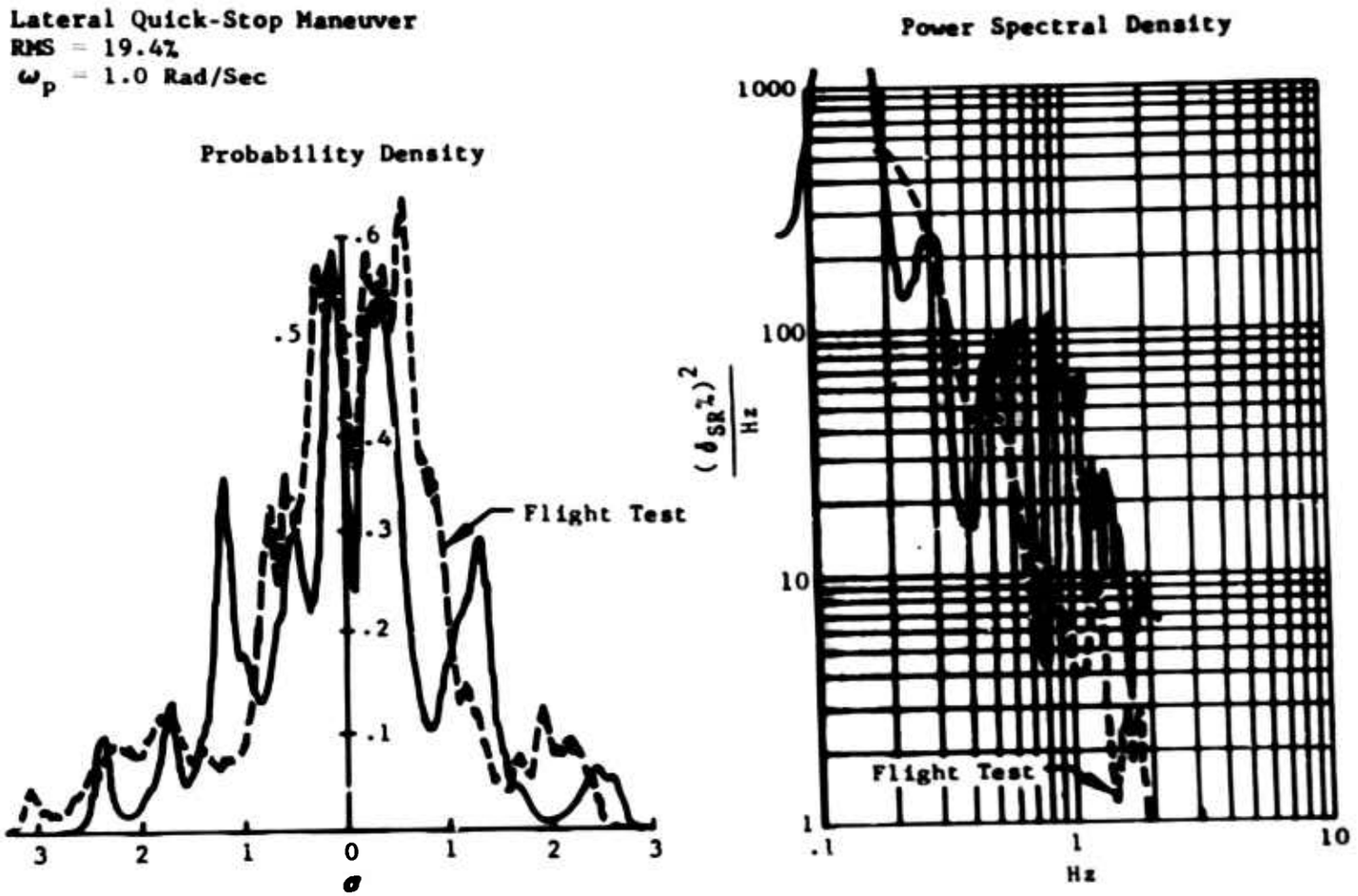

Figure 9. Moving-Base Comparison with Flight for ω_p = 1.0 Rad/Sec.

Lateral Quick-Stop Maneuver
RMS = 11.5%

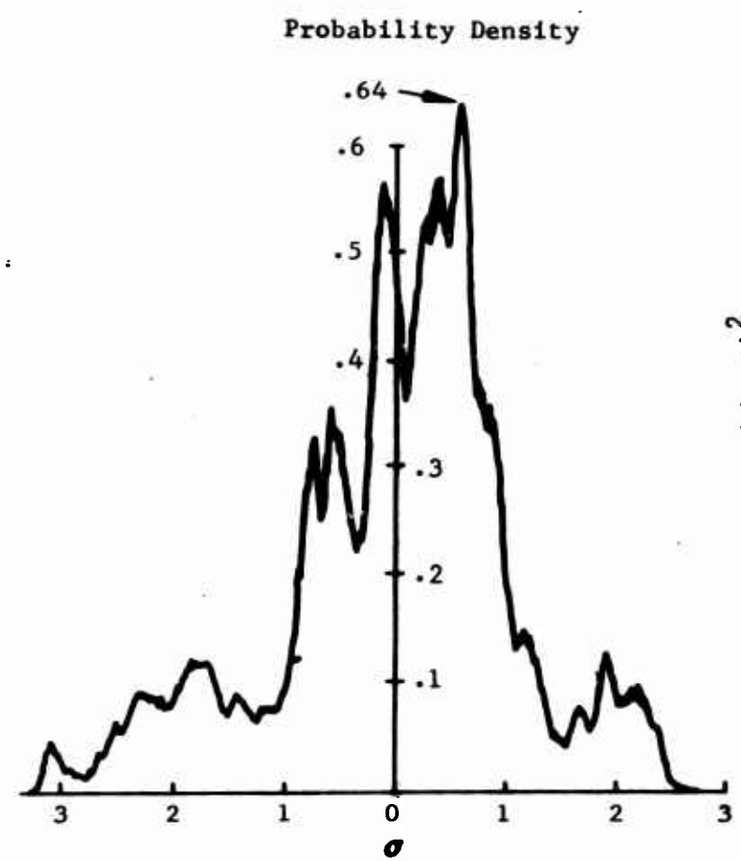

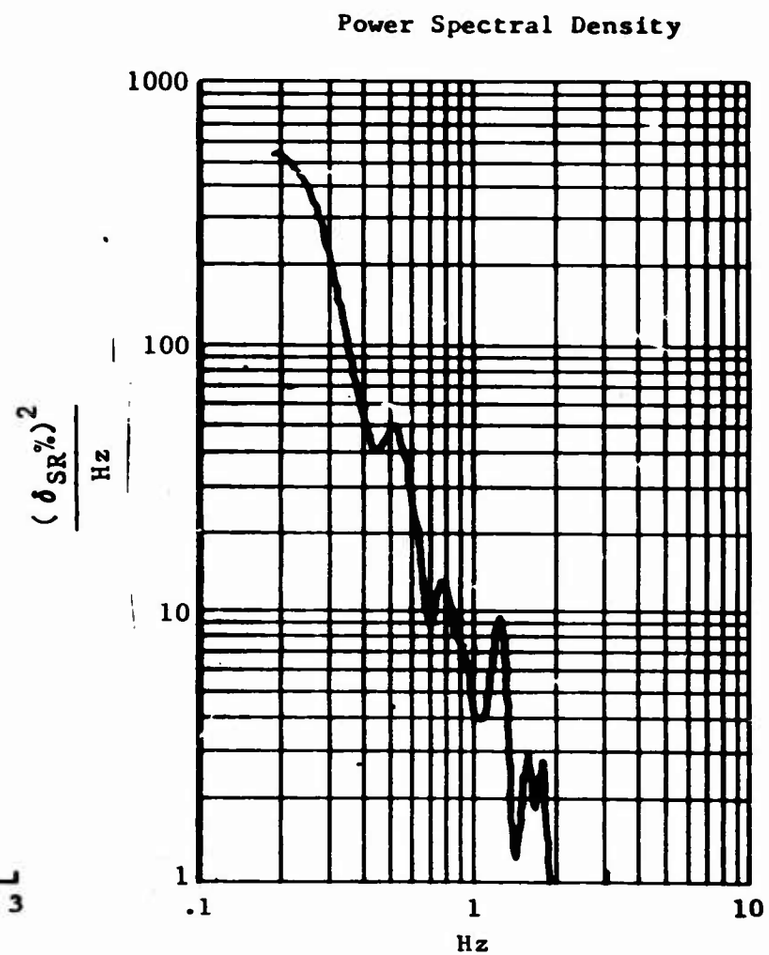

Figure 10. Reference Flight Test Data.

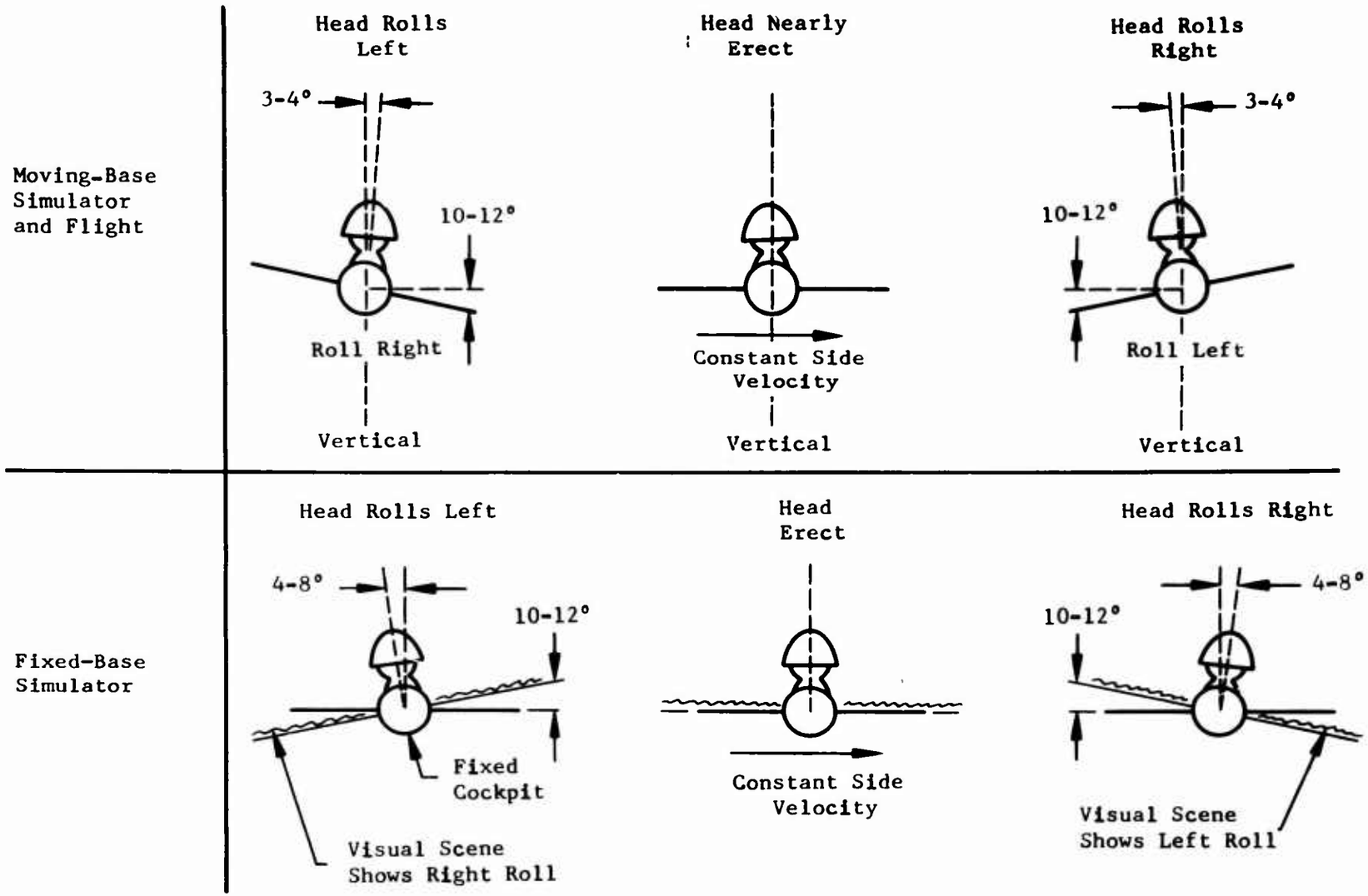

Figure 11. Pilot Head Movements in the Lateral Quick-Stop Maneuver.

LITERATURE CITED

1. Sinacori, J.B., V/STOL GROUND-BASED SIMULATION TECHNIQUES, Northrop Corporation; USAAVLABS Technical Report 67-55, U. S. Army Aviation Materiel Laboratories, Fort Eustis, Virginia, September 1967, AD 665425.

2. Peters, R.A., DYNAMICS OF THE VESTIBULAR SYSTEM AND THEIR RELATION TO MOTION PERCEPTION, SPATIAL DISORIENTATION, AND ILLUSIONS, NASA CR-1309, April 1969.

3. Miller, E.F., II, COUNTERROLLING OF THE HUMAN EYES PRODUCED BY HEAD TILT WITH RESPECT TO GRAVITY, Bureau of Medicine and Surgery, U. S. Naval School of Aviation Medicine, Report No. 75, September 1962.

4. Blake, B.B., Albion, N., and Radford, R.C., FLIGHT SIMULATION OF THE CH-46 HELICOPTER, American Helicopter Society Paper No. 361, May 1969.

DISTRIBUTION

Army Materiel Command	4
Army Aviation Systems Command	5
United States Army, Pacific	1
Director of Defense Research and Engineering	2
Chief of R&D, DA	3
Army Aeromedical Research Unit	1
Army R&D Group, Europe	2
Army Aviation Materiel Laboratories	18
Army Aviation Systems Test Activity	2
Army Limited War Laboratory	1
Army Human Engineering Laboratories	2
Army Ballistic Research Laboratories	1
Harry Diamond Laboratories	1
Army Aeronautical Research Laboratory, Ames Research Center	1
Army Research Office-Durham	1
Army Materials and Mechanics Research Center	6
Plastics Technical Evaluation Center	1
Army Test and Evaluation Command	1
Army Materiel Systems Analysis Agency	1
Army Electronics Command	2
Army Combat Developments Command, Fort Belvoir	2
Army Combat Developments Command Experimentation Command	1
Army Combat Developments Command Aviation Agency	3
Army Combat Developments Command Transportation Agency	1
Army Ordnance Weapons Command	1
Ordnance Special Weapons-Ammunitions Command	1
Army Medical R&D Command	1
Army Advanced Materiel Concepts Agency	1
Army Edgewood Arsenal	1
Army Frankford Arsenal	1
Army War College	1
Army Command and General Staff College	1
Army Aviation School	1
Assistant Chief of Staff for Force Development, DA	1
Army Tank-Automotive Command	2
Army Armor and Engineer Board	1
Army Aviation Human Research Unit	1
Army Board for Aviation Accident Research	1
1st Cavalry Division (Airmobile)	1
Air Force Office of Scientific Research	1
Air Force Flight Test Center, Edwards AFB	2
Army Field Office, AFSC, Andrews AFB	1
Air Force Avionics Laboratory, Wright-Patterson AFB	1
Air Force Materials Laboratory, Wright-Patterson AFB	3
Air Force Flight Dynamics Laboratory, Wright-Patterson AFB	6
Systems Engineering Group, Wright-Patterson AFB	1
Naval Ship Engineering Center	1
Naval Air Systems Command	11
Office of Naval Research	3

Naval Safety Center, Norfolk	1
Naval Air Test Center, Patuxent River	1
Naval Air Propulsion Test Center, Philadelphia	2
Naval Air Development Center, Johnsville	1
Naval Weapons Center, China Lake	1
Naval Weapons Laboratory, Dahlgren	1
Commandant of the Marine Corps	1
Marine Corps Development and Education Command	1
Marine Corps Liaison Officer, Army Transportation School	1
Electronics Research Center, NASA	1
Lewis Research Center, NASA	2
Manned Spacecraft Center, NASA	1
Marshall Space Flight Center, NASA	1
NASA Scientific and Technical Information Facility	2
Langley Research Center, NASA	1
Ames Research Center, NASA	3
Aeronautical Vehicles Division, NASA	1
HQ, NASA, Washington, DC	1
Bureau of Aviation Safety, National Transportation Safety Board	2
Federal Aviation Administration, Washington, DC	7
Federal Aviation Administration, Jamaica, NY	1
NAFEC Library, FAA	2
Civil Aeromedical Institute, FAA	2
The Surgeon General	1
Government Printing Office	1
Defense Documentation Center	20

Unclassified
Security Classification

DOCUMENT CONTROL DATA - R & D

(Security classification of title, body of abstract and indexing annotation must be entered when the overall report is classified)

1. ORIGINATING ACTIVITY (Corporate author) Northrop Corporation Aircraft Division Hawthorne, California	2a. REPORT SECURITY CLASSIFICATION Unclassified 2b. GROUP

3. REPORT TITLE

A STUDY OF V/STOL GROUND-BASED SIMULATION TECHNIQUES

4. DESCRIPTIVE NOTES (Type of report and inclusive dates)

Final Report 1 February 1968 to 1 January 1970

5. AUTHOR(S) (First name, middle initial, last name)

John B. Sinacori

6. REPORT DATE April 1970	7a. TOTAL NO. OF PAGES 41	7b. NO. OF REFS 4
8a. CONTRACT OR GRANT NO. DAAJ02-68-C-0019 b. PROJECT NO. IF162204A14233 c. d.	9a. ORIGINATOR'S REPORT NUMBER(S) USAAVLABS Technical Report 70-16 9b. OTHER REPORT NO(S) (Any other numbers that may be assigned this report) NOR-69-168	

10. DISTRIBUTION STATEMENT

This document is subject to special export controls, and each transmittal to foreign governments or foreign nationals may be made only with prior approval of U. S. Army Aviation Materiel Laboratories, Fort Eustis, Virginia 23604.

11. SUPPLEMENTARY NOTES	12. SPONSORING MILITARY ACTIVITY U.S. Army Aviation Materiel Laboratories Fort Eustis, Virginia

13. ABSTRACT

The use of ground-based flight simulators for establishing the handling quality characteristics of aircraft through correlation with actual flight data is still in the early stages of development. Only qualitative and subjective opinions are available as to the proper level of simulation that gives acceptable fidelity for a given simulation.

The purpose of this study is to define the simulation characteristics required to establish the simulator as a reliable and valid tool in the development of V/STOL aircraft and helicopters.

A flight simulator employing the point light source principle to generate a visual display was used in these studies. Previous studies of a jet-lift V/STOL aircraft in this simulator uncovered a pilot-vehicle performance deficiency during lateral maneuvers, resulting in a nausea reaction which limited pilot participation. In the present investigation, human motion perception was studied, and solutions to this pilot-vehicle performance deficiency were evolved by the use of a moving base.

The results demonstrated that effective simulation is possible when certain constraints are observed. The best constraints of the drive mechanism were determined experimentally and were compared with those implied from physiological concepts of human motion perception.

A simulation validation rationale was also developed to assist the pilot in his evaluations. An example of this is described together with a discussion of some limitations.

DD FORM 1 NOV 65 1473 REPLACES DD FORM 1473, 1 JAN 64, WHICH IS OBSOLETE FOR ARMY USE.

Unclassified
Security Classification

Unclassified
Security Classification

14. KEY WORDS	LINK A ROLE	LINK A WT	LINK B ROLE	LINK B WT	LINK C ROLE	LINK C WT
Simulation, V/STOL Airplane						
Techniques, V/STOL Airplane Simulation						
Airplane, V/STOL Simulation						

Unclassified
Security Classification