UNCLASSIFIED

AD NUMBER

AD869272

NEW LIMITATION CHANGE

TO

Approved for public release, distribution unlimited

FROM

Distribution: Further dissemination only as directed by Department of the Army, Attn: Public Affairs Office, Washington, DC 20310, DEC 1969, or higher DoD authority.

AUTHORITY

ODCSL DIA ltr, 11 Jan 1974

THIS PAGE IS UNCLASSIFIED

RPMA MODULE ANALYSIS
FOR THE
INTEGRATED FACILITIES SYSTEM

PRC R-1209
VOLUME II, PART 2

December 1969

Prepared for

Department of the Army
Deputy Chief of Staff for Logistics
Director of Installations

D D C
RECEIVED
MAY 20 1970
C

This document may be further distributed by any holder only with specific prior approval of HQ DA, ATTN: DCSLOG/DI-IFSO.
Wash D.C. 20310

PLANNING RESEARCH CORPORATION
LOS ANGELES, CALIFORNIA WASHINGTON, D.C.

Best
Available
Copy

ACCESSION for
CFSTI WHITE SECTION ☐
DDC BUFF SECTION ☑
UNANNOUNCED ☐
JUSTIFICATION .....
BY .....
DISTRIBUTION/AVAILABILITY CODES
DIST. AVAIL. and/or SPECIAL
5

RPMA MODULE ANALYSIS
FOR THE
INTEGRATED FACILITIES SYSTEM

PRC R-1209
VOLUME II, PART 2

December 1969

Prepared for

Department of the Army
Deputy Chief of Staff for Logistics
Director of Installations

by

John Watson (Task Coordinator)

Robert L. Anelli
John G. Cleveland
John W. Nocita
Robert K. Wood

PLANNING RESEARCH CORPORATION

Universal Building North • Suite 1030 • 1875 Connecticut Avenue N.W. • Washington, D.C. 20009

This document may be further distributed by any holder only with specific prior approval of HQ DA, ATTN: DCSLOG/DI-IFSO.

FOREWORD

Module systems analysis, with which this document is concerned, consists of an analytical review and assessment of organizational goals and missions, existing functions, operations and systems, and internal and external interfaces for the purpose of defining:

- Functions that should be accomplished to achieve the mission and goals
- Information required to support/perform the delineated functions
- Processes required to produce the outputs required by the functions

The next step, module systems design, produces flow charts and supporting material that depict:

- Data sources
- Specific inputs
- Data files
- Processing logic
- Specific outputs
- Subsystem and module interfaces

These, in turn, establish the framework for system specification.

This report concludes the documentation on systems analysis of Real Property Maintenance Activities (RPMA) and presents the results of that analysis. It provides the guidance required to proceed to the next step, module systems design, the results of which will be presented in the RPMA Functional Design Report.

This report distills the findings and earlier analysis of the RPMA area as reported in two previous documents:

1. Volume I, System Definition for the IFS, contains information in Sections IV and V addressing RPMA, primarily within organizations below Headquarters, Department of the Army (HQ DA).

2. Volume II, Part 1, RPMA Management Function Analysis for the IFS, addresses RPMA at HQ DA level and above.

Since this is one in a series of Integrated Facilities System (IFS) documents, a detailed discussion of background information is not contained herein. Rather, reference is made to the following existing IFS documents:

Planning Research Corporation (PRC), D-1506, Integrated Facilities System, August 1967.

Planning Research Corporation (PRC), D-1506, Integrated Facilities System, October 1967.

Planning Research Corporation (PRC), R-1104, Program Definition for the Design and Development of an Integrated Facilities System (IFS), March 1968.

PRC Technical Proposal B-68-08-471A, A Proposal for the Design and Development of an Integrated Facilities System (IFS), 30 September 1968.

Planning Research Corporation (PRC), R-1209, Volume III, Part 1, Facility Requirements Analysis for the Integrated Facilities System, March 1969.

Planning Research Corporation (PRC), R-1209, Volume VI, Part 1, Facility Condition and Readiness Definition for the Integrated Facilities System, April 1969.

Planning Research Corporation (PRC), R-1209, Volume I, System Definition for the Integrated Facilities System, June 1969.

Planning Research Corporation (PRC), R-1209, Volume II, Part 1, Real Property Maintenance Activities (RPMA) Management Function Analysis, June 1969.

Planning Research Corporation (PRC), R-1209, Volume IV, New Construction Module Analysis and Design for the Integrated Facilities System (Draft), August 1969.

Planning Research Corporation (PRC), R-1209, Volume VII, ADP Analysis for the Integrated Facilities System, August 1969.

Planning Research Corporation (PRC), R-1209, Volume VIII, Phase IIB Development Plan for the Integrated Facilities System, August 1969.

Planning Research Corporation (PRC), R-1209, Volume III, Part 2, Facility Planning Module Analysis and Design for the Integrated Facilities System (Draft), August 1969.

Planning Research Corporation (PRC), R-1209, Volume VI, Part 2, Facility Condition Field Test and Impact Analysis for the Integrated Facilities System, September 1969.

PRC Technical Proposal B-63-08-674A, A Proposal for the Continued Development of the Integrated Facilities System (IFS) - Phase IIB, 8 October 1969.

Planning Research Corporation (PRC), R-1209, Volume V, Assets Storage and Retrieval Module Analysis and Design for the Integrated Facilities System, November 1969.

PRECEDING PAGE BLANK - NOT FILMED

TABLE OF CONTENTS

			Page
FOREWORD			iii
I.	SUMMARY		I-1
	A.	Functional Design Overview	I-1
	B.	Executive Summary	I-4
		1. Section I - Summary	I-4
		2. Section II - RPMA Management	I-4
		3. Section III - RPMA Functional Management	I-6
		4. Section IV - RPMA Financial Management	I-9
		5. Section V - IFS Data Uniformity	I-12
II.	RPMA MANAGEMENT		II-1
	A.	The Need for an Improved System	II-1
	B.	The Concept for an Improved System	II-4
	C.	Data Requirements of RPMA	II-4
		1. Requirements Within the RPMA Management Area	II-4
		2. Requirements External to RPMA Area But Within IFS	II-5
		3. Requirements External to IFS	II-5
	D.	PPBER, the Echelons, and the Cycles	II-6
	E.	RPMA in the Planning Phase	II-11
	F.	RPMA Management and PPBER	II-17
III.	RPMA FUNCTIONAL MANAGEMENT		III-1
	A.	Problems Related to Strengthening Functional Management	III-2
		1. Transition From Present to Proposed Procedures	III-2
		2. The Meaning of Unconstrained Requirements	III-3
		3. RPMA Standards	III-4
		4. Procedures for Determining Unconstrained Requirements	III-10

TABLE OF CONTENTS
(Continued)

Page

5. Facility Condition Evaluation III-26
6. Continuous Collection III-28
7. Groups of Similar Facilities III-29
8. Priorities III-32
9. Facility Components III-34

B. Reports in the RPMA Functional Management Channel III-34
1. Unconstrained Requirements Report III-35
2. Financed/Unfinanced Requirements Report . . . III-54
3. Summary Annual Work Plan III-56
4. Midyear Review Report III-57
5. Prior- Year Performance Report III-58

IV. RPMA FINANCIAL MANAGEMENT IV-1

A. Financial Requirements Development During the Planning Phase IV-1
B. Financial Aspects of Programming and Budgeting in Formulation Phase IV-1
1. Problem Areas IV-1
2. Impact of Extension of FYDP-Based Management Structure to Installation Level . . . IV-2
3. Assumptions as Basis for Concept for Financial Management IV-5
4. RPMA in the Budget Formulation Process IV-5
5. Financial-Functional Interface at All Levels . . IV-24
6. RPMA in the Non-OMA Appropriations IV-30
7. RPMA Functional Design IV-34

V. IFS DATA UNIFORMITY V-1

A. Background V-1
B. Approaches V-1
C. Data Management Concept V-5

TABLE OF CONTENTS
(Continued)

Page

D. Determination of Key Data Elements V-7

E Data Base Development V-8

APPENDIX A UNIFORM CODING METHODOLOGY KEY DATA ELEMENTS A-1

APPENDIX B ELEMENT OF EXPENSE TRANSLATIONS B-1

APPENDIX C AMS BASE OPERATIONS BUDGET PROJECT ACCOUNTS VERSUS OSD FUNCTIONAL CATEGORIES C-1

APPENDIX D GLOSSARY D-1

PRECEDING PAGE BLANK - NOT FILMED

LIST OF EXHIBITS

		Page
I-1	Tentative RPMA Systems Design	I-3
II-1	Major Dimensions of the RPMA System	II-3
II-2	Five-Year Budgetary Cycle	II-7
II-3	Matrix of Present Reports Replaced or Partially Replaced by New RPMA Reports	II-9
II-4	RPMA Requirements Projection	II-14
II-5	Project Assets To Be Available	II-15
II-6	Project Expected Demands	II-16
II-7	RPMA Management Cycle	II-19
III-1	RPMA Standards	III-6
III-2	Organization of RPMA Standards	III-9
III-3	Generation of Unconstrained Requirements: Functional Category 10 - Maintenance of Real Property (Alternative One)	III-11
III-4	Sample Work Requirement, Shop Level	III-15
III-5	Sample Work Requirements, Branch Level	III-17
III-6	Sample Work Requirements, Division Level	III-19
III-7	Use of Standards in Determining Unconstrained M&R Requirements	III-21
III-8	Generation of Unconstrained Requirements: Functional Category 10 - MORP (Alternative Two)	III-23
III-9	Relationship of Unconstrained Requirements to Year of Execution	III-30
III-10	URR Summary Sheet - Installation	III-37
III-11	URR Functional Category 9, Operation of Utilities	III-39
III-12	URR Functional Category 10, Maintenance of Real Property	III-42

LIST OF EXHIBITS
(Continued)

		Page
III-13	URR Functional Category 11, Minor Construction . . .	III-49
III-14	URR Functional Category 12, Other Engineering Support.	III-51
III-15	Financed/Unfinanced Requirements Report (FURR) . .	III-55
III-16	PYPR - Functional Category 9, Operation of Utilities	III-61
III-17	PYPR - Functional Category 11, Minor Construction .	III-63
IV-1	Dollar Guidance for RPMA in PBG	IV-9
IV-2	Dollar Guidance for Base Operations in an FYDP-Based Structure	IV-11
IV-3	Sample of Present Narrative Guidance for RPMA in PBG.	IV-13
IV-4	Use of UR and FUR Reports to Influence Level of RPMA Support	IV-15
IV-5	Preparation of RPMA in Army Budget Estimate.	IV-19
IV-6	Approved Operating Budget	IV-25
IV-7	Concept for Flow of RPMA and Financial Data.	IV-29
V-1	Data Management Technique.	V-4
V-2	Key Data Elements	V-6

I. SUMMARY

A. Functional Design Overview

Our earlier analyses disclosed that one of the major shortcomings of RPMA management has been the absence of visibility of RPMA requirements in a form, at a time, and at all echelons where planning, programming, and budgeting (i.e., resource decisionmaking) is going on. This absence of a base point from which to adjust and build priorities, and against which to describe the impact of shortfalls in RPMA resources, has been the single most significant impediment to proper consideration of RPMA needs. "Consideration of RPMA needs" should be interpreted to cover both the period when plans, programs, and budgets are being made and the period of execution of work during any given year.

Analysis also disclosed--perhaps in a more implied than directly stated fashion--that a companion aspect of this lack of visibility of RPMA requirements was the absence of any convenient language for talking about the impact or effect of RPMA work and effort upon (1) the Army mission-activities being supported and (2) the facilities being maintained. This absence of an RPMA language can be blamed for part of the difficulty being experienced in obtaining understanding and support of RPMA within the Army.

This document presents ways that these shortcomings may be corrected or significantly reduced. Concepts of procedures and techniques are outlined for developing a sound annual basis for determining RPMA requirements and a way to present such requirements so as to ensure consideration at the time Army basic annual decisions are being made. Moreover, the format and methods proposed for developing and presenting requirements can be carried through as a fundamental management tool for work planning and resource allocation throughout the entire management cycle, to include execution of the RPMA task. A rudimentary language of effect and impact is created through the introduction of condition terminology and by encouraging the Army's early

exploitation of the full potential of RPMA standards, especially those identified as "mission" standards. Also, regarding standards, it is shown herein how they can be used to develop requirements and thus establish a common, agreed-upon, credible basis at all echelons for evaluating requirements.

Further, in recognition of the desirability of improved performance of RPMA and more effective use of engineer manpower, a recommendation is made that the Army accelerate and widen its adoption of automated support of work management activities at the installation level.

Recognizing the need for stronger, clearer ties between requests for funds and the purpose to be served or work to be carried out with the funds requested, a detailed functional management system is proposed for RPMA, which will provide the data necessary to display RPMA requirements and deficiencies relatable to support of forces, missions and protection of investment. Only RPMA functional category summary amounts within the funding guidance and approved budget levels will be carried in the financial management system. In this way, valid and justifiable RPMA requirements rather than past funding or performance levels should influence favorable financial support decisions.

In summary, the broad outlines of the tentative RPMA system design are illustrated in Exhibit I-1. Guidance from the Office of the Secretary of Defense (OSD) and HQ DA is sent to each level of command, major Army field command (MAFC), major subordinate command (MSC), and installation. The IFS functional management system will combine, consolidate, and contain RPMA data in reports that cover functional planning, programming, distribution of financial resources, and correlation with other facilities data and which are channeled in facilities functional management channels. The IFS functional management system will provide summary amounts and details as required in a timely manner at any stage of the planning, programming, budgeting, execution, or evaluation processes. RPMA data will not be removed from the financial management channel but financial management reports will be simplified to eliminate all but RPMA functional category summary financial data.

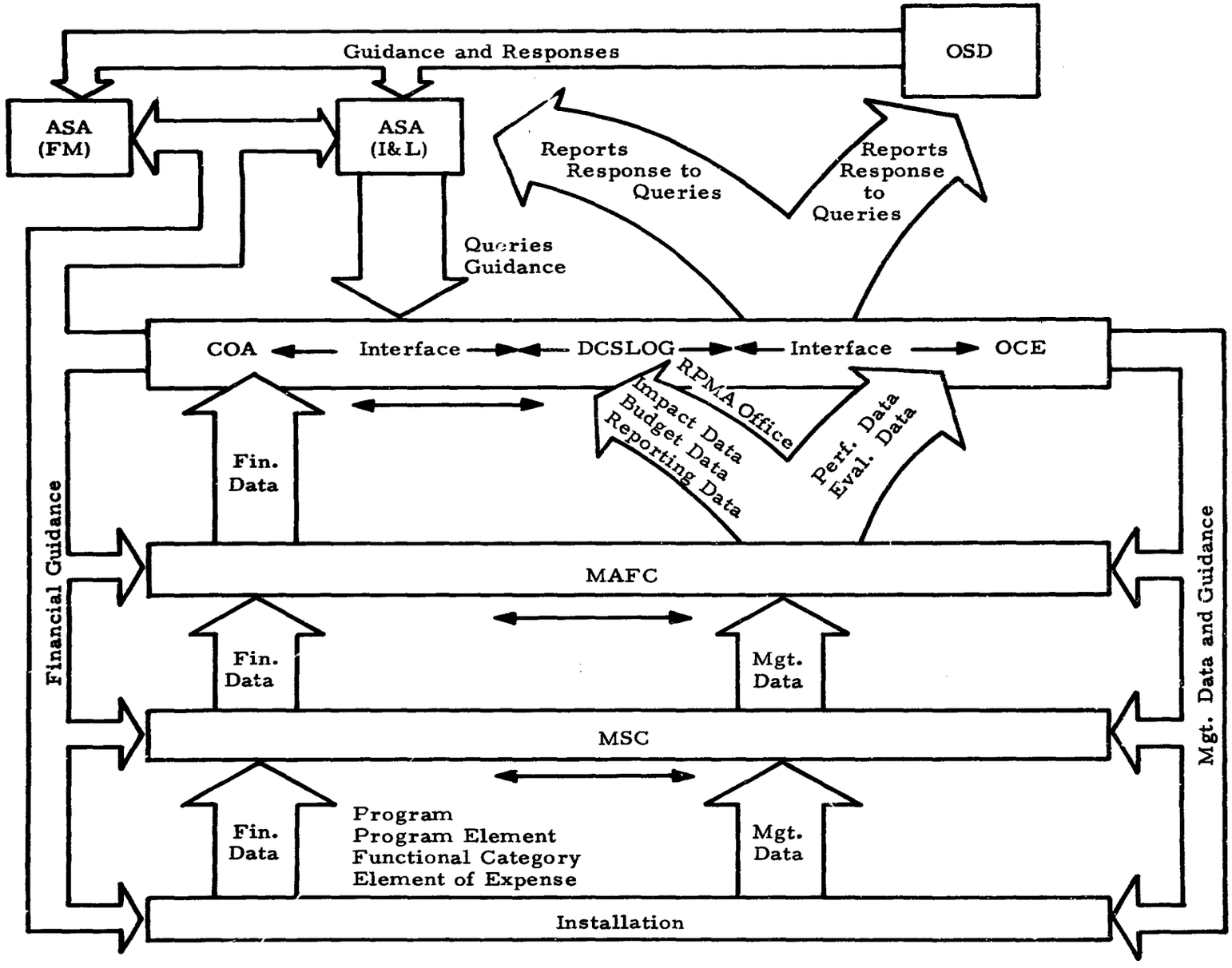

EXHIBIT I-1 TENTATIVE RPMA SYSTEMS DESIGN

B. Executive Summary

1. Section I - Summary

This subsection is a summary of the most important points covered in the following sections of this report. Since this summary condenses the contents of the report, some background and detail are lost; the reader is therefore encouraged to peruse the entire report.

2. Section II - RPMA Management

This section states that an improved system for management of RPMA is needed to correct the following deficiencies identified during systems analysis:

- Lack of statement of RPMA requirements during the planning phase of the planning-programming-budgeting-execution-review (PPBER)[1] cycle
- Poor correlation between technical, financial, and real property accounting reports
- Poor visibility of technical and financial aspects of RPMA management
- Current information systems not being able to rapidly produce structured backup in answer to questions concerning RPMA

The concept for an improved system for management of RPMA is that:

- RPMA requirements are generated at the installation level, processed through the chain of command, and reported to HQ DA early enough in the PPBER cycle to influence preparation of the Defense Guidance Memorandum, which addresses logistics guidance, including RPMA.
- Two separate but supporting channels are used for management of RPMA. The present RPMA functional management channel is strengthened and distinguished from the financial management channel.

[1] The review phase has also been referred to in other IFS documents as "performance evaluation."

Five new reports, which replace current functional management plans and reports, provide the data that flow in the functional management channel. Each of the functional management reports supports a phase of the PPBER cycle. Each report addresses the four RPMA functional categories: operation of utilities, maintenance of real property, minor construction, and other engineering support. And each report is used by both facility users and facility maintainers at each echelon from installation to HQ DA. These five reports will utilize a uniform format so that all reports are similar in general outline, thereby providing to both facility users and facility maintainers similarly structured data in all reports. The major difference in these reports will be in the degree of detail provided (e. g., PYPR vs. URR), as highly detailed data are required for review and evaluation purposes while more general data can be provided for planning purposes.

The table below shows each RPMA report, its acronym, the phase of the PPBER cycle in which it occurs, and the corresponding PPBER document:

RPMA Report	Acronym	PPBER Phase	PPBER Document
Unconstrained Requirements Report	URR	Planning	DGM (Logistics Guidance) MPM (Land Forces)
Financed/Unfinanced Requirements Report	FURR	Programming	COB
Summary Annual Work Plan	SAWP	Budgeting	AOB
Midyear Review Report	MYRR	Execution	BER
Prior-Year Performance Report	PYPR	Review	PYR

- The financial management channel uses budget and financial guidance documents to identify RPMA funding authorisations or guidance by Five-Year Defense Program (FYDP) programs and program elements as well as by appropriation or fund source. The financial data

requirements are summarized by functional categories, and the detailed RPMA requirements, workload data, and expense authorization or distribution will be contained in the RPMA functional management reports and guidance documents.

Section II also lists all activities and staff elements that either require or generate RPMA data within and external to IFS management.

3. Section III - RPMA Functional Management

This section provides samples of the five RPMA functional management reports. It also discusses important questions raised by the concept. These include:

a. Transition From Present to Proposed Procedures

The present doctrine on post engineer work management and planning [as expressed in Army Regulation (AR) 420-17] forms the platform upon which the new system will be built. While the proposed new system will replace currently used plans and reports, the content and basic purpose of these plans and reports will continue in different, more useful forms. The new URR, FURR, SAWP, MYRR, and PYPR are presented in this analysis as manually developed plans and reports. If these reports are implemented manually on an interim basis, however, they will not be capable of providing rapid response to RPMA queries during that period. Since the detailed backup information used for preparation of the reports would not be readily retrievable during a period of manual operation, the RPMA portion of the IFS data base would not be available for manipulation, use, and integration with other portions of the IFS data base. The transition from manual to automated mode should therefore be accomplished as rapidly as possible in order to fully utilize the complete IFS data base.

b. The Meaning of Unconstrained Requirements

A keystone of the RPMA concept presented in this document is the early systematic generation and projection of RPMA requirements unconstrained by budget and manpower limitations. The following definition is proposed: Unconstrained requirements include all work necessary for the post engineer to operate and maintain the installation facilities, support his customers, and safeguard his assets in accordance with established policies and at the RPMA standards prescribed in pertinent regulations, technical manuals, and other approved RPMA documents.

c. RPMA Standards

The Department of the Army (DA) has established and published rules, measures, and models by which the degree of satisfactoriness of real property maintenance activities can be measured. These RPMA standards are diffused through a large collection of documents and are not organized in a way that provides visibility to facility managers above installation level. There is a need for the Army to undertake an effort to sort RPMA standards by (1) functional category and (2) mission support and technical efficiency categories.

d. Procedures for Determining Unconstrained Requirements

Two alternative techniques are proposed for determining unconstrained requirements; one is based on procedures now used to generate requirements for the annual work plan, the second is based on teams of inspectors. In the first alternative, each person in the post engineer chain of command, from craftsman to installation commander, participates in the systematic process. Each brings to bear his knowledge of approved RPMA standards, of actual condition of facilities, and of requests made by facility users to estimate unconstrained work requirements. The formalized procedure shows reports proceeding from shop level to the installation commander. In the second and preferred alternative, trained and certified inspectors collect project requirements, thereby lending credibility and uniformity to the estimates, removing the paperwork burden from the post engineer shop personnel, and combining with the inspection effort of collecting facility condition data. Collection procedures, which continue throughout the year, feed into a reservoir of known and estimated requirements. It is from this reservoir that requirements for the URR, FURR, and SAWP are obtained.

e. Facility Condition Evaluation

The IFS facility condition methodology provides a new basic language for portraying some of the effects and impacts of RPMA efforts. It already shows promise as a valuable tool not only for RPMA but for all of IFS. It will (1) aid in the allocation of resources, (2) show,

within the RPMA management area, where to put effort, (3) assist in performance evaluation and detection of trouble spots, and (4) enhance the preventive maintenance program by identifying areas that need immediate attention. Facility condition evaluation will eventually become an integral part of strengthened RPMA functional management.

f. Groups of Similar Facilities

To provide visibility to facility users and facility maintainers at all echelons, the proposed reports (URR, etc.) will use "groups of similar facilities." These groups, based on and consistent with FC&CCC, will form the basis for a line item review of maintenance, repair, and condition of facilities supporting each FYDP program and, possibly, each program element. PRC, with assistance from the Army, will produce a DA standard list of groups of similar facilities to be used at installations Army-wide. Only through the establishment and adoption of standard groupings can the requisite visibility be provided.

g. Priorities

A system of priorities for RPMA management is necessary to assist decisionmakers at all echelons in ensuring that the most essential RPMA work is funded and executed. Although a system for determining priorities exists at the installation level and is used in making the annual work plan, such a system appears to be lacking at higher echelons. A priority system for facilities management is therefore proposed for use at all echelons. It consists of three suggested groupings, as follows:

Priority 1 - includes functional category 9, operation of utilities; most of functional category 12, other engineering services; those portions of functional categories 10 and 11 that are most essential and most difficult to delay, including in-house work; and some contracts and equipment acquisitions.

Priority 2 - includes items, primarily contracts and equipment acquisitions within functional categories 10, 11, and 12, that are important and should not be delayed.

Priority 3 - includes items that are justified but can be delayed without deleterious effect on mission, morale, safety, or facilities.

4. Section IV - RPMA Financial Management

This section addresses the problems of (1) identity and visibility of RPMA in the appropriations programs and (2) the upgrading in importance of RPMA in the programming, budgeting, and review processes.

A current decision by the Army to implement an FYDP-based management structure for Operation and Maintenance, Army (OMA), has reduced the emphasis on the problems of identity and visibility of RPMA within the present Army Management Structure (AMS). As of 1 July 1970, the Army will implement an FYDP-based management structure for OMA down to the installation level. This new structure will conform to the resource management system project, Priority Management Effort (PRIME).

Some characteristics of Project PRIME are:

- It is one of a number of improvements in resource management initiated by the Department of Defense (DOD).
- The programs in the FYDP provide the basis on which the entire system is structured.
- Costs are developed on an accrual basis.

The shift by the Army to Project PRIME procedures should be accomplished with minimal changes in existing techniques. Some changes, probably minor in nature, will occur in programming and budgeting under the FYDP program structure as opposed to the present AMS-budget-program-based structure.

Some assumptions that have been made and upon which this portion of the analysis is based are:

- The former budget-program-based AMS for OMA will be replaced by an FYDP-based management structure.
- The budget-program-based AMS will continue to be used to develop data for the President's budget and congressional hearings.

- Financial data reporting from the field in the OMA portion of the Army budget system, under Project PRIME, will be by FYDP program, program element, functional category, and element of expense.
- Any system design for improved RPMA management will be compatible with, and will interface with, Project PRIME reporting requirements.

In moving to an FYDP-based management structure for OMA, the Army has developed a new code structure that closely parallels the Resources Management System (RMS) code structure. This shift to a new code structure should alleviate the workload presently experienced by the Army in using the budget-program-based AMS in lieu of the program element structure.

a. RPMA Programming, Budgeting, and Review

Program budget dollar guidance for base operations, which is distributed four times annually, should be changed in the new AMS to provide data having a more direct correlation between base operations and the functional categories contained therein. Considerable change should take place in the program budget narrative guidance for RPMA when the new AMS is implemented. Most, if not all, of the guidance for RPMA presently set forth will then be distributed in an RPMA document.

The preparation of the Command Budget Estimate (CBE) will, with the implementation of the URR, be influenced for the first time by an input from the field that has been designed for that purpose.

Two changes should occur at HQ DA upon implementation of the strengthened RPMA functional management channel:

- Program Directors should return separate dollar guidance decisions on RPMA recommendations directly to the RPMA office (RPMAO) rather than through the Operating Resources Management Office (ORMO).

- The more direct role of RPMAO will require the formalizing of the present informal relationship that exists between RPMAO and the Program Directors.

The functional management channel will provide data to RPMAO and the Office of the Chief of Engineers (OCE) that can be used effectively for budget hearings and supporting the Program Directors.

The only change in the Command Operating Budget (COB) will be that much of the detailed RPMA data [Maintenance and Operation of Real Property (MORP)] now carried in this budget will be removed. The present format for the COB will be retained, but The Automated Army Budget System (TAABS) output schedule will carry summarized RPMA data only.

The Budget Execution Review (BER), as with the COB, will carry summarized RPMA data only; supporting data will move through the functional management channel in the form of the MYRR.

The Prior-Year Report (PYR) will be supported by the PYPR, so the PYR also will carry summarized RPMA data only.

b. Development of Coordination

To ensure that all management requirements are met, both financial and functional, a major task to be accomplished in the RPMA system design phase (IIB) will be to develop the Comptroller-Engineer-Program Director relationship at all echelons of command.

Other areas of coordination to be developed will be between RPMAO/OCE and COA, ORMO, and the Program Directors. Also, a separate task will be to develop a methodology to provide data for decisions at the executive level, i. e., Office of the Chief of Staff, Army (OCSA), Office of the Secretary of the Army (OSA), and Office of the Secretary of Defense (OSD).

c. RPMA and the Non-OMA Appropriations

Although shortage of resources for RPMA and resultant deferred maintenance at installations supported by non-OMA

appropriations and funds do not appear to have developed to any significant degree, the current reporting procedures and code structure used in the financial channel give only partial visibility to the dollars programed and spent for RPMA. Accordingly, greater reliance, for RPMA functional management purposes, must be placed on the newly strengthened functional channel of RPMA for these non-OMA areas.

5. Section V- IFS Data Uniformity

This section discusses alternatives for data uniformity within the IFS and presents the proposed functional requirements for a data management system. The methodology employs key data elements to facilitate data input, manipulation, and retrieval by all management areas of IFS and will be used as a conceptual guide during the development of the IFS data base during Phase IIB of IFS development. Appendixes provide tables showing the relationship of data elements to selected IFS reports. There are also tables showing the translation of data elements between two Army and OSD accounting codes.

II. RPMA MANAGEMENT

A. The Need for an Improved System

The PRC analysis of RPMA management functions[1] identified a number of specific deficiencies in present RPMA management. Present RPMA reporting relies generally on the Army financial management system, partly because of OSD-directed increases in detail to be displayed in budget support data. This added detail in the financial management system has not provided the data necessary to display RPMA requirements and deficiencies needed for effective planning and management.

The RPMA concept presented herein is aimed at removing from the financial channel the detailed RPMA requirements, workload data, and expense authorization and distribution while including these data in a strengthened and separate channel for RPMA functional management. This functional management channel is designed to be responsive to the daily planning and operating needs of RPMA. The concept recognizes the RPMA management task as one of providing a key Army support service through effective management--administrative, technical, and financial--of manpower, equipment, supplies, facilities, and dollars.

This section addresses both the functional and the financial management channels. It stresses the close relationships and articulation that exist within the three primary dimensions of an RPMA system:

- RPMA functional categories[2]
- PPBER
- Echelons of users and maintainers

The RPMA functional categories include all the support provided by the post engineer to his installation, its occupants, and its facilities. The PPBER cycle is a primary tool used to manage all Army activities.

---

[1] Volume I, Sections IV and V; and Volume II, Part 1, in the IFS series of PRC reports.

[2] Functional Categories: 9 - Operation of Utilities; 10 - Maintenance of Real Property; 11 - Minor Construction; 12 - Other Engineering Support

The facilities managers and program directors or their representatives at all echelons influence the command decisions that result in RPMA support. By integrating these three dimensions (see Exhibit II-1), the proposed design concept for improved RPMA management will address correction of the deficiencies of the present system, which are summarized below.

1. Lack of statement of requirements during the planning phase of the PPBER cycle.

2. Poor correlation between data systems: technical, e.g., Command Analysis of Utility Operations (CAUO) and Technical Data Reports (TDR); Comptroller, e.g., AMS budget; and real property assets accounting, e.g., Facility Classes and Construction Categories Codes (FC&CCC).

3. RPMA trace through the PPBER cycle unclear, with poor comparability from one phase to the next.

4. Poor visibility for facility users (e.g., program directors) of RPMA support of their programs; i.e., they are not given information on:

   a. Condition of facilities occupied.

   b. Quality and effectiveness of RPMA support rendered.

   c. Requirements and impact of shortfalls.

5. Poor visibility of technical aspects of the RPMA programs for facility maintainers at echelons above installation; i.e., RPMA staffs are not given sufficient information on the degree to which standards are being met.

6. Internal shop management data at installation not readily relatable to reporting requirements of higher echelons; i.e., the correlation between the organizational elements of the post engineer and the RPMA activity accounts in the AMS is poor.

7. No provision in current reports for building component information, which is needed for better visibility of RPMA functional management. (See subsection III.A.9, page III-34).

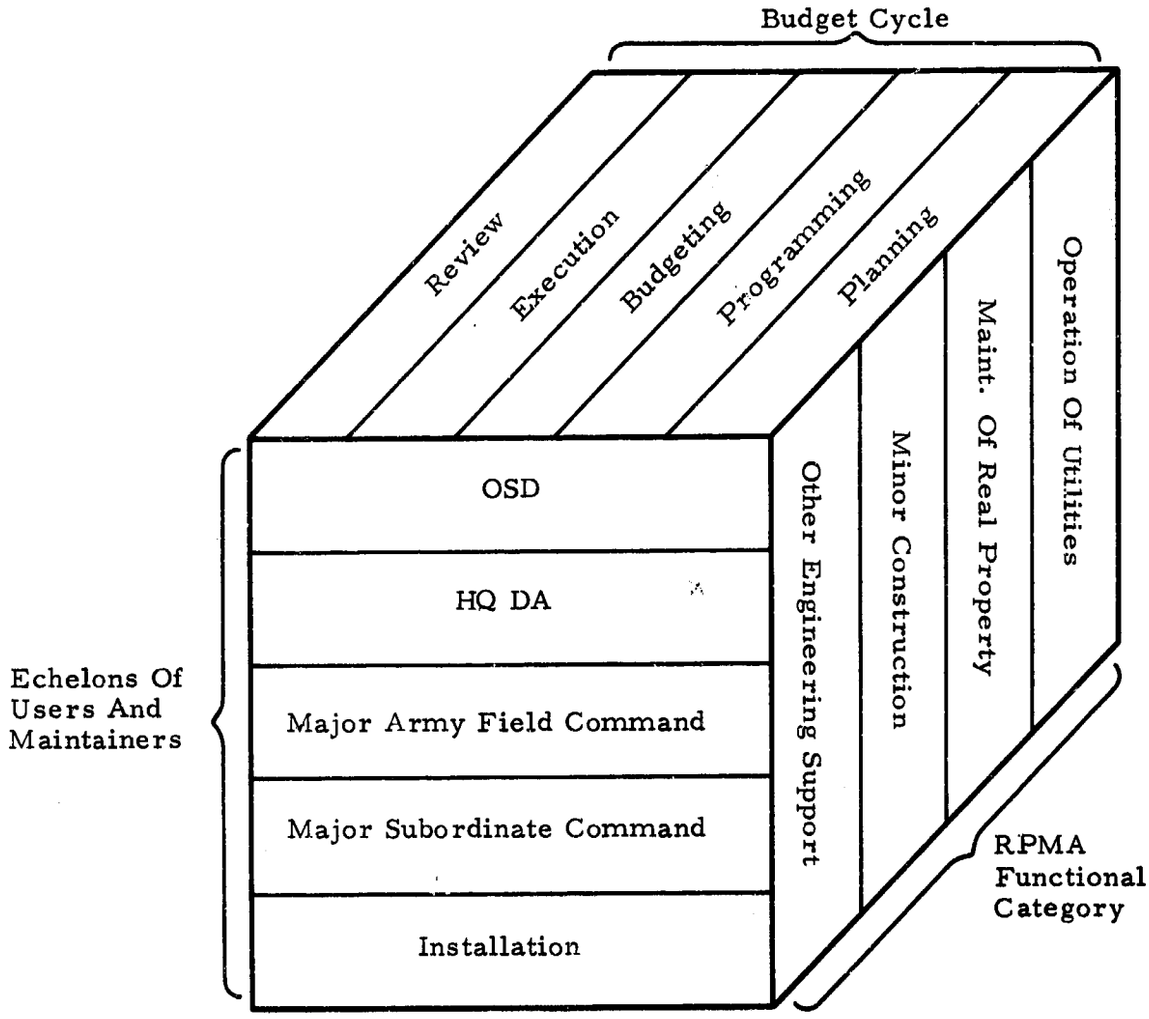

EXHIBIT II-1 MAJOR DIMENSIONS OF THE RPMA SYSTEM

8. Slow response; information systems cannot rapidly produce answers to queries.

9. Lack of structured and comprehensive backup that can be easily retrieved if requested during reviews or analysis.

B. The Concept for an Improved System

The deficiencies found cannot be corrected individually, for they are closely related; changes in one area will cause changes in other areas. For this reason, PRC has looked at the problem as a whole and is proposing a strengthened RPMA management system that, in its overall form, will correct the deficiencies and will support more effective RPMA management. The proposed system will be directly related to the PPBER cycle, with a specific RPMA management action--for the purpose of simplicity, we will call it a report--supporting each phase of the PPBER cycle. This system will have uniform data elements that management can use to follow RPMA actions directly from one phase to the next. And it will be designed to meet the needs of both facility users (program element directors) and facility maintainers (RPMA staffs) at all echelons.

C. Data Requirements of RPMA

Listed below is a display of the places where RPMA data requirements will exist. The requirements are listed with respect to whether they are wholly internal to the RPMA management area or whether they are external interfaces of RPMA with other staff and management areas. The listing is an aid to the work of system design that follows during Phase IIB of the IFS project. It should be noted that this formal identification of RPMA data requirements contributes to the solution of the problems of data control.

1. Requirements Within the RPMA Management Area

a. Internal to RPMA functional management at each echelon (including facility condition).

b. Internal to RPMA financial management at each echelon.

c. Interrelationship between functional and financial management at each echelon.

d. Interrelationship with echelon above (functional and financial).

e. Interrelationship with echelon below (functional and financial).

2. Requirements External to RPMA Area But Within IFS

a. Installation or Facilities Manager.

b. IFS Manager.

c. New Construction management area (functional and financial).

d. Facilities Planning area.

e. Assets, Storage, and Retrieval area.

3. Requirements External to IFS

a. The customers/program directors.

b. The sources of support of RPMA.

- Authorizations for people and equipment [Tables of Distribution and Allowances (TDA)]
- Personnel (including civilian personnel training)
- Equipment and tools
- Supplies
- Maintenance
- Transportation
- Communications
- Budget and funding
- EDP services
- Contracting officer

c. Guidance and coordination points:

- G1 - safety advice, personnel, administrative policy
- G3 - commitments, plans, and priorities
- G4 - commitments to support others or be supported by others
- Surgeon - health and sanitation advice
- Post Planning Board - priorities
- Director, Base Operations Program Element

ACSFOR - authorizations (manpower and equipment)
- work measurement

- Local, State, and Federal agencies - building codes, roads and highways, soil conservation, erosion and flood control, pollution control

D. PPBER, the Echelons, and the Cycles

Because the timing of reports in the proposed RPMA system meshes with that of the PPBER cycle, it is considered appropriate to discuss this cycle before describing the proposed RPMA management in detail. The PPBER cycle and the timing of its documents can be more easily understood by referring to the 5-year budgetary cycle shown in Exhibit II-2. The vertical axis on the left-hand side of the exhibit represents fiscal years (FY): prior year (PY) 1969, current year (CY) 1970, budget year (BY) 1971, target year (TY) 1972, and the year succeeding the target year, 1973.

In each FY on the vertical axis are the levels of command or echelons from installation upward through Major Subordinate Command (MSC), Major Army Field Command (MAFC), and HQ DA, to OSD. Each horizontal strip for an FY refers to budgetary activities, at each level of command, which pertain to that particular FY. For example, the third horizontal strip portrays all budgetary activities that pertain to BY 1971, from preparation of the Joint Strategic Objectives Plan (JSOP) for BY 1971 through receipt of the PYR for BY 1971.

The horizontal axis at the top of the page is the time axis, expressed as FY's 1969 through 1973. Each vertical strip for an FY refers to all budgetary activities pertaining to the PY, CY, BY, and TY that take place during one FY time period. During 1970, for example, budgetary activities pertain to documents ranging from the PYR for PY 1969 to the JSOP for TY 1972.

The solid-line boxes in the exhibit refer to the present PPBER cycle of actions with budget documents moving through the financial management channel (Comptroller). The broken-line boxes refer to new reports in the proposed RPMA management system that will move in a strengthened functional management channel. These new reports will provide data for facility managers at all levels of command and

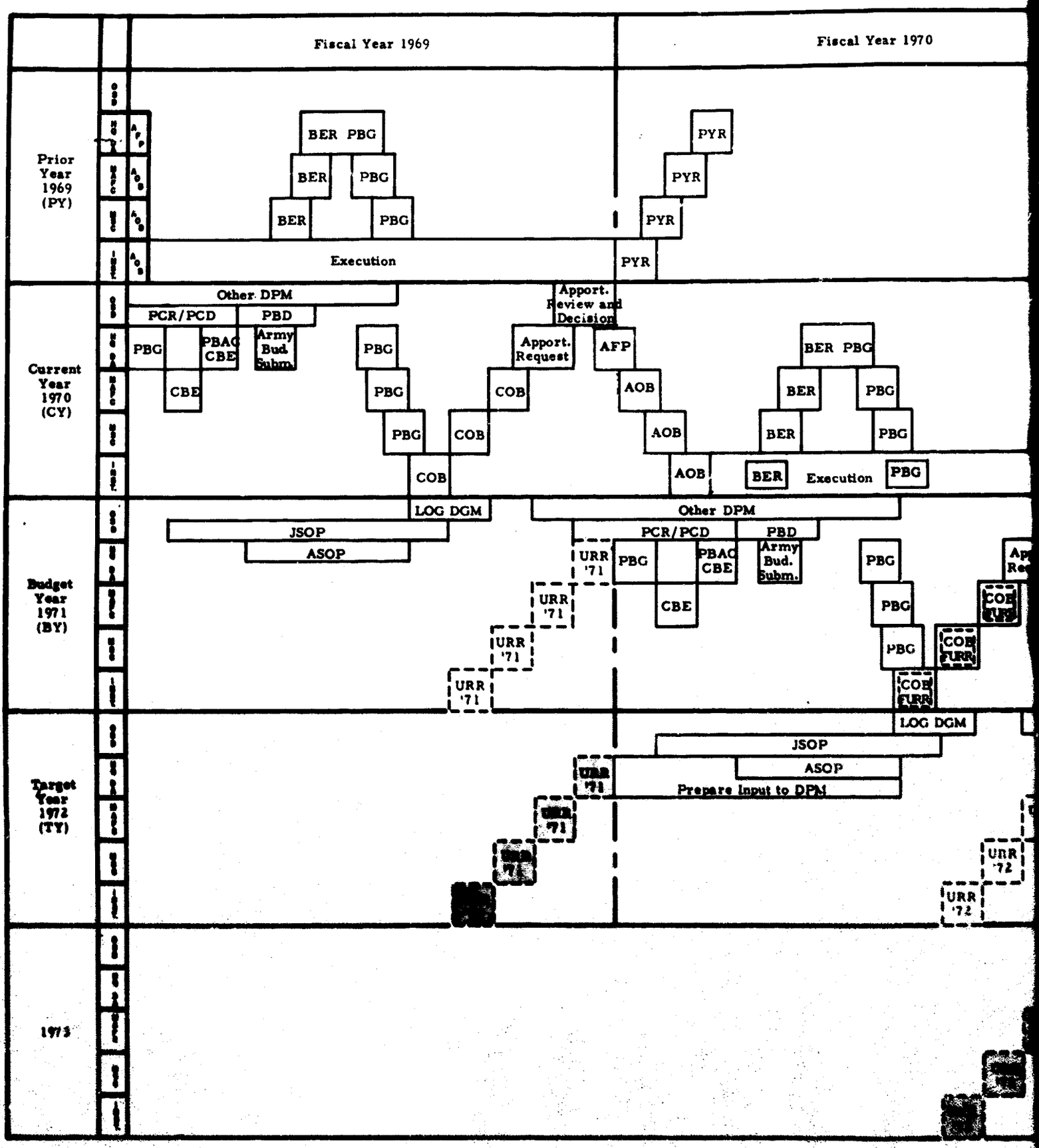
Fiscal Year 1969
Fiscal Year 1970
Prior Year 1969 (PY)
BER PBG
BER
PBG
BER
PBG
PYR
PYR
PYR
Execution
PYR
Current Year 1970 (CY)
Other DPM
PCR/PCD
PBD
PBG
PBAC CBE
Army Bud. Subm.
CBE
PBG
PBG
PBG
COB
COB
Apport. Review and Decision
Apport. Request
AFP
AOB
AOB
AOB
BER PBG
BER
PBG
BER
PBG
BER
Execution
PBG
Budget Year 1971 (BY)
LOG DGM
JSOP
ASOP
Other DPM
PCR/PCD
PBD
URR '71
PBG
PBAC CBE
Army Bud. Subm.
CBE
URR '71
URR '71
URR '71
PBG
PBG
PBG
LOG DGM
Target Year 1972 (TY)
JSOP
ASOP
Prepare Input to DPM
URR '72
URR '72
1973

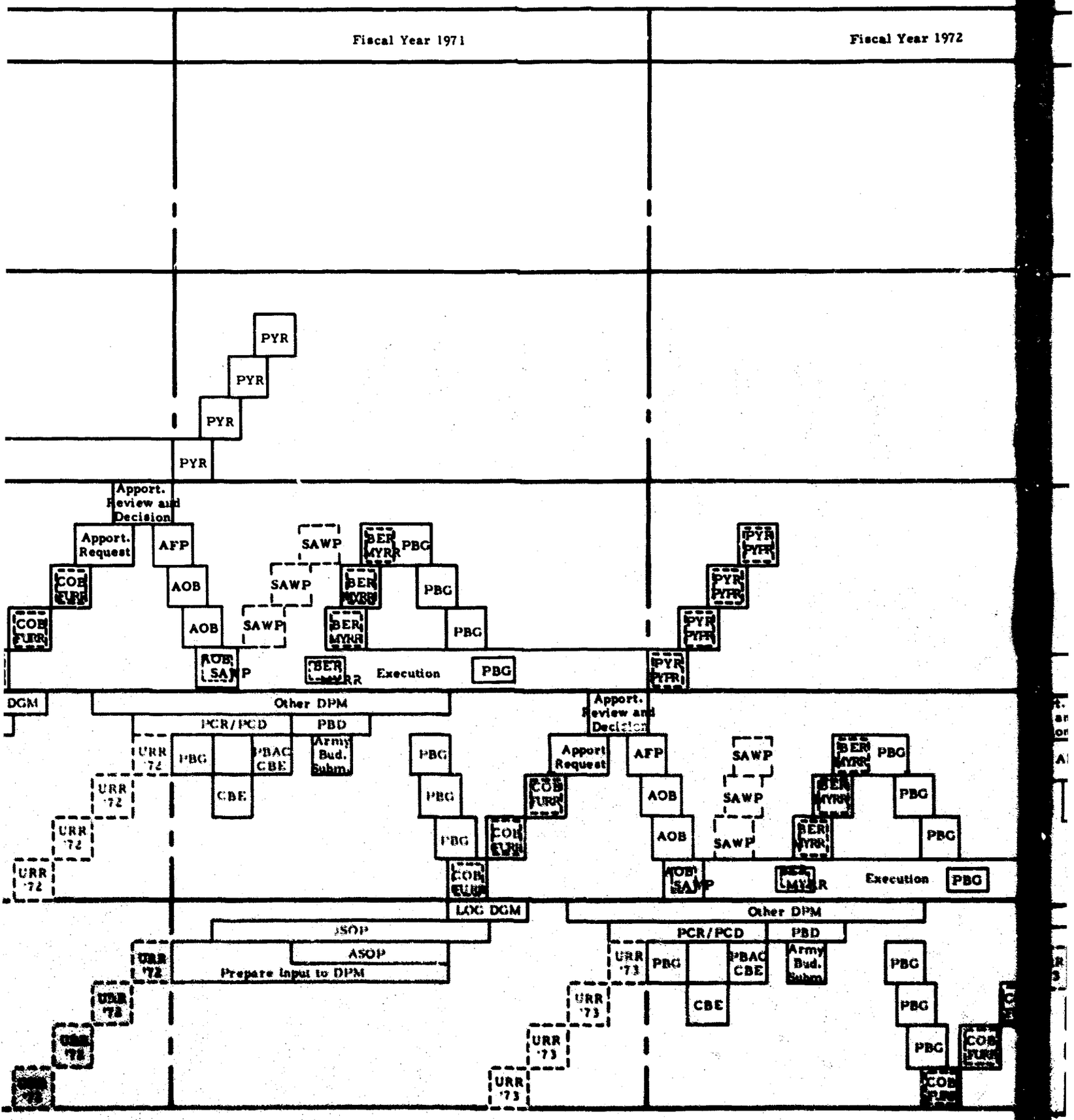
Fiscal Year 1971
Fiscal Year 1972
PYR
PYR
PYR
PYR
Apport. Review and Decision
Apport. Request
AFP
AOB
AOB
SAWP
SAWP
SAWP
PBG
PBG
PBG
Execution
PBG
DGM
Other DPM
PCR/PCD
PBD
URR '72
PBG
PBAC CBE
CBE
Army Bud. Subm.
URR '72
URR '72
URR '72
PBG
PBG
PBG
Apport. Request
AFP
AOB
AOB
SAWP
SAWP
SAWP
PBG
PBG
PBG
Execution
PBG
LOG DGM
Other DPM
JSOP
ASOP
Prepare Input to DPM
PCR/PCD
PBD
URR '73
PBG
PBAC CBE
CBE
Army Bud. Subm.
PBG
PBG
PBG
URR '73
URR '73
URR '73

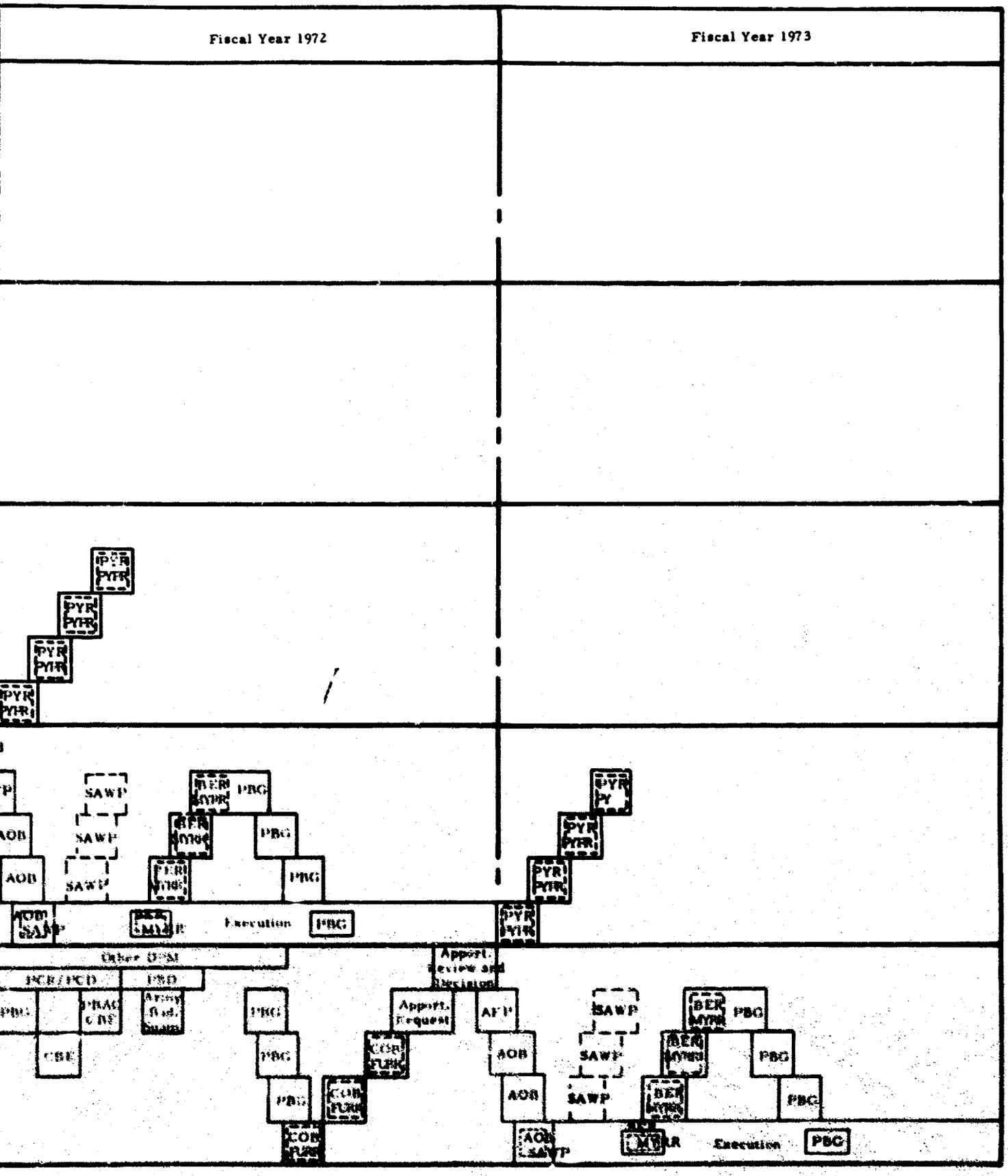

EXHIBIT II-2 FIVE-YEAR BUDGETARY CYCLE

PRECEDING PAGE BLANK - NOT FILMED

backup data available to support financial managers at all echelons through HQ DA. The shaded boxes signify the use of one of the new reports (unconstrained requirements) for one FY as a basis for projection of requirements for a subsequent year (see subsection E, RPMA in the Planning Phase).

Each phase of the PPBER cycle will have tied to it an RPMA functional management report that provides input to, or supports, a PPBER document and provides data for technical management. These reports will utilize a basic or uniform format in presenting data that may vary only in detail to satisfy the requirements of each report (e.g., performance data in the PYPR). The table below shows each RPMA report, its acronym, the phase of the PPBER cycle in which it occurs, and the corresponding PPBER document:

RPMA Report	Acronym	PPBER Phase	PPBER Document
Unconstrained Requirements Report	URR	Planning	DGM (Logistics Guidance) MPM (Land Forces)
Financed/Unfinanced Requirements Report	FURR	Programming	COB
Summary Annual Work Plan	SAWP	Budgeting	AOB
Midyear Review Report	MYRR	Execution	BER
Prior-Year Performance Report	PYPR	Review	PYR

Exhibit II-3 is a matrix relating the five proposed RPMA functional reports (URR, FURR, etc.) to reports presently used in providing RPMA data in both the financial and functional (technical) channels. Symbols have been used in the matrix to indicate how the proposed RPMA reports relate to the present reports in three basic ways: (1) replace present reports; (2) replace 95 percent of RPMA input to present reports; and (3) replace portion of RPMA data in the present reports. This matrix indicates some duplication of data in category (3), should the present reports be retained in their present format. The similarity in format of the five proposed reports, however, will provide RPMA data continuity, visibility, and credibility that should eliminate the need for RPMA data in the present reports. These reports could be restructured and evaluated as to their further retention in the Army reporting system.

Proposed RPMA Reports	Present Reports*																												
	1	2	3	4	5	6	7	8	9	10	11	12	13	14	15	16	17	18	19	20	21	22	23	24	25	26	27	28	29
1. URR	●		●					●				●		●		●	x								●	●		●	●
2. FURR								●										—							●				
3. SAWP	●		●					●				●		●									●	●	●				
4. MYRR								●											—					●	●		●		
5. PYPR	●	●	●	x	x	x	x	●	x	x	x		●		●					—	x	●		●	●		●		

SYMBOLS

x Replaces 100 percent of present report

— Replaces 95 percent RPMA input to present report

● Replaces portion of RPMA data in present report

EXHIBIT II-3 MATRIX OF PRESENT REPORTS REPLACED OR PARTIALLY REPLACED BY NEW RPMA REPORTS

EXHIBIT II-3 (Continued)

*Legend of Present Reports					
No.	Name	Form	No.	Name	Form
1.	Natural Resources - Part I	DA 2785R	16.	Rqmts Data, Master Plan	—
2.	Natural Resources - Part II	2785-1-R	17.	Rqmts Data, LRWP	—
3.	Natural Resources - Part III	2785-2-R	18.	RPMA data, COB	—
4.	TDR - Part I	2788	19.	RPMA data, BER	—
5.	TDR - Part II	2788-1	20.	RPMA data, PYR	—
6.	TDR - Part III	2788-2	21.	MORP Report	Exh. 13
7.	TDR - Part IV	2788-3	22.	DDI 4150.9	—
8.	R&U Special Projects Rept	2867	23.	Elements AWP	—
9.	CAUO, - Part I	2869	24.	DDI 4270.24	—
10.	CAUO, - Part II	2869-1	25.	RP Fac Project Req.	DD 1391
11.	CAUO, - Part III	2869-2	26.	Pest Control Summary	DD 1532
12.	Air Pollution, Summary	3205-R	27.	Family Housing Rept	DA 2866
13.	Air Pollution, Annual Prog.	3206-R	28.	Refuse Report	DA 5-126
14.	Water Pollution, Summary	3274-R	29.	Custodial Report	DD 1113
15.	Water Pollution, Annual Prog.	3280-R			

We see from Exhibit II-2 that preparation of the URR for TY 1972 would begin at installation shortly after receipt of the February program budget guidance (PBG) shown in BY 1971 and after submission of the COB for BY 1971. At that time, the post engineer organization would have a firm idea of funding levels for the BY (1971) to guide it in developing unconstrained requirements for the TY (1972). The URR would leave the installation approximately 15 months before the TY begins, in time to reach HQ DA to influence preparation of the June PBG and staff-developed CBE for the TY (1972). As importantly, the URR for the TY would also be used by HQ DA in preparing its staff-developed input to the Defense Guidance Memorandum (DGM) for the year succeeding the TY (i.e., 1973).

The FURR would be prepared after receipt of the January PBG--about 11 months after the URR for the same FY. The timing of the FURR would correspond to the preparation and submission of the COB, the former moving through the functional management channel, and the latter through financial management channels.

The SAWP would be prepared after receipt of the Approved Operating Budget (AOB) in June--about 4 months after submission of the FURR.

The MYRR would be prepared in November--about 4 months after submission of the SAWP. The timing of the MYRR would correspond to the preparation and submission of the BER.

The PYPR would be prepared after the year of execution--about 9 months after submission of the MYRR. The timing of the PYPR would correspond to the preparation and submission of the PYR.

E. RPMA in the Planning Phase

Analysis has established a need within the planning phase of the PPBER cycle for a technique to present RPMA requirements in a way and at a time or times in this cycle that such requirements would be considered before key planning guidance documents, such as the DGM and Draft Presidential Memorandum (DPM), are published. The following is the technique proposed for influencing the content of OSD annual logistics guidance.

In essence, the technique is a method for the Army staff to make a 1-year projection, or extrapolation, of unconstrained requirements beyond those furnished HQ DA by field installations and commands. In the earlier discussion of the RPMA functions, it was proposed that a URR be generated annually, immediately following completion of the COB. This URR addresses the year after that addressed by the newly completed COB. This information is transmitted through channels to HQ DA, where it serves two purposes.

First, it influences the action during the formulation of the June PBG and markup of the COB. Concurrently, it furnishes the MAFC's with a more complete basis than they now have for their response to the June PBG and markup of the COB.

Second, it forms the base and point of departure for a projection of RPMA requirements into the next year beyond the year addressed. Reference to Exhibit II-2 makes it clear that the Army staff is then able to make a projection of requirements for the same target year as that being addressed by the JSOP, which is in preparation during this same time period. Most important, such projection addresses the same target year as the DGM on logistics guidance, and the proposed Army staff action takes place at a time early enough to permit a unilateral Army submission to OSD prior to publication of that DGM. Such a unilateral submission of RPMA and other facility requirements is proposed as a logical adjunct to the January update of the FYDP.

Coordinated with the unilateral submission to OSD, and taking place during the same time frame, is the other approach proposed for presenting RPMA requirements during the planning phase: participation in midrange planning actions. Projected RPMA requirements will be included in the Army Strategic Objectives Plan (ASOP), and through that plan will be carried into the JSOP as the Army's input to the joint plan. In this way, RPMA requirements will be directed at OSD through the joint channel. These needs will be part of the full sweep of facility aspects included in midrange plans. The Army thus adops an active aggressive posture in attempting to influence the content of the DGM, and, even after the DGM is published, the Army is armed with a soundly reasoned basis for rapid response during the "for comment" period.

The methodology for projection of requirements is portrayed, as a flow chart, in Exhibit II-4. RPMA requirements, in terms of workload requirements, are functions of the quantity of facility assets on hand and the expected demand for facilities and related RPMA support of all Army missions, activities, and commitments. It is necessary, therefore, to project the assets to be on hand and the demands for facilities expected during the TY to be studied. Projection of assets is accomplished as shown in Exhibit II-5. Starting with the current assets inventory, there are added all completions of new construction plus all other acquisitions foreseen, whether purchased, leased, or borrowed from other agencies. From this total must then be deducted the planned disposals and demolitions. The net figure represents the expected assets position or picture of total facilities to be on hand in the TY. Source material for making these computations would include inputs--such as the URR--from field agencies, as well as military construction program performance and experience data. The precision of this projection of assets could be expected to improve as facility planners gain experience with their estimating factors.

The other projection, that of estimating the demands that will be made on facilities assets, also involves a series of computations (see Exhibit II-6). Most of this projection is furnished to the RPMA planner at HQ DA by the facility planners. The RPMA planner must be provided a projection of facility requirements based on deployment and stationing of all Army forces worldwide, for the TY. To the resultant demand for facilities required for Army troop units and their associated station complements are added, in turn, the facilities needed to support training base missions, logistic base missions, research and development (R&D), and other special missions. Next, there must be added planned support of others. This includes commitments to furnish facilities or other RPMA support to other services, agencies, or allied forces. Lastly, from those computations is deducted the support that will be furnished Army missions and forces by other services, agencies, or allies. The impact of support arrangements between services and nations must be included.

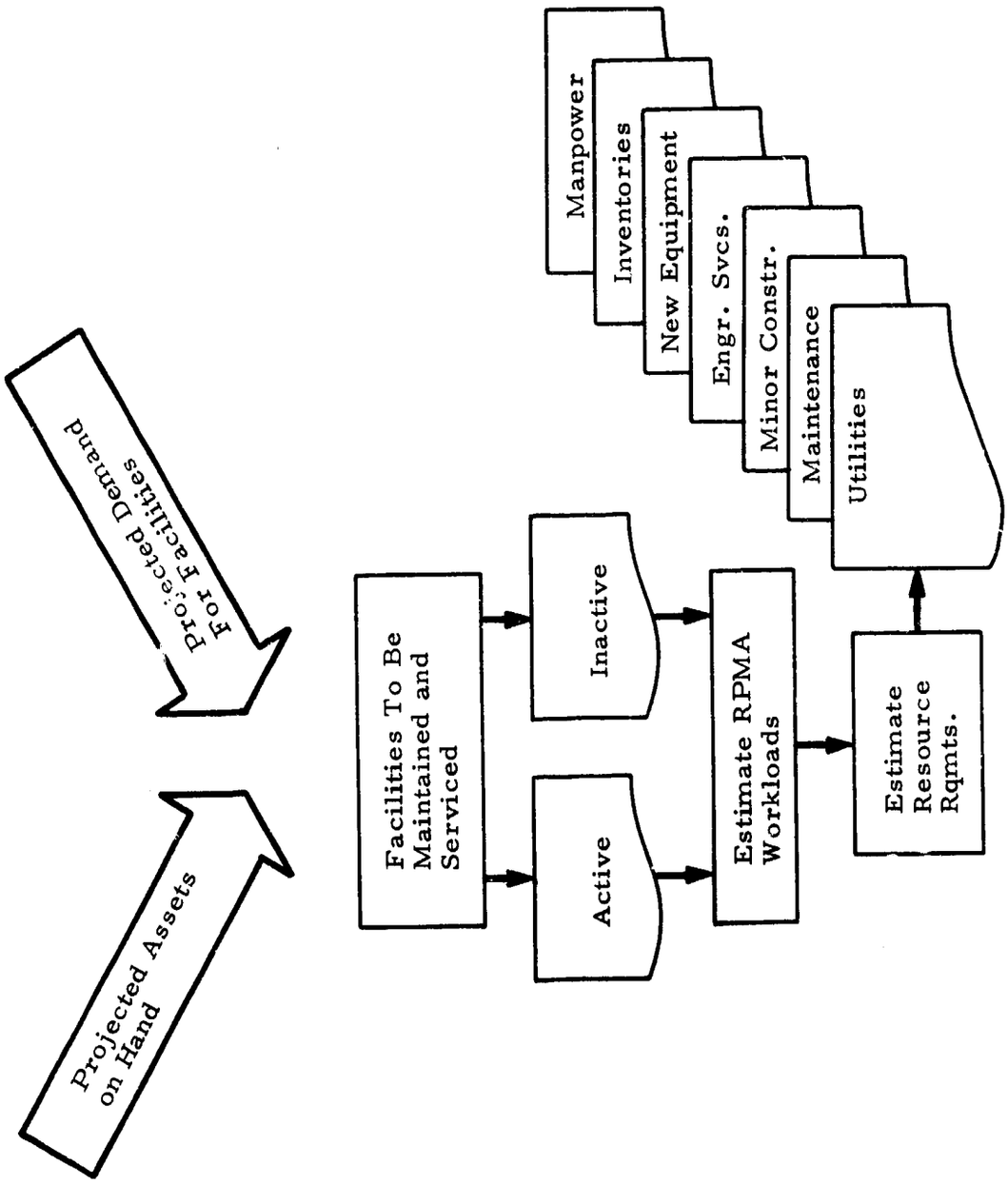

EXHIBIT II-4 RPMA REQUIREMENTS PROJECTION

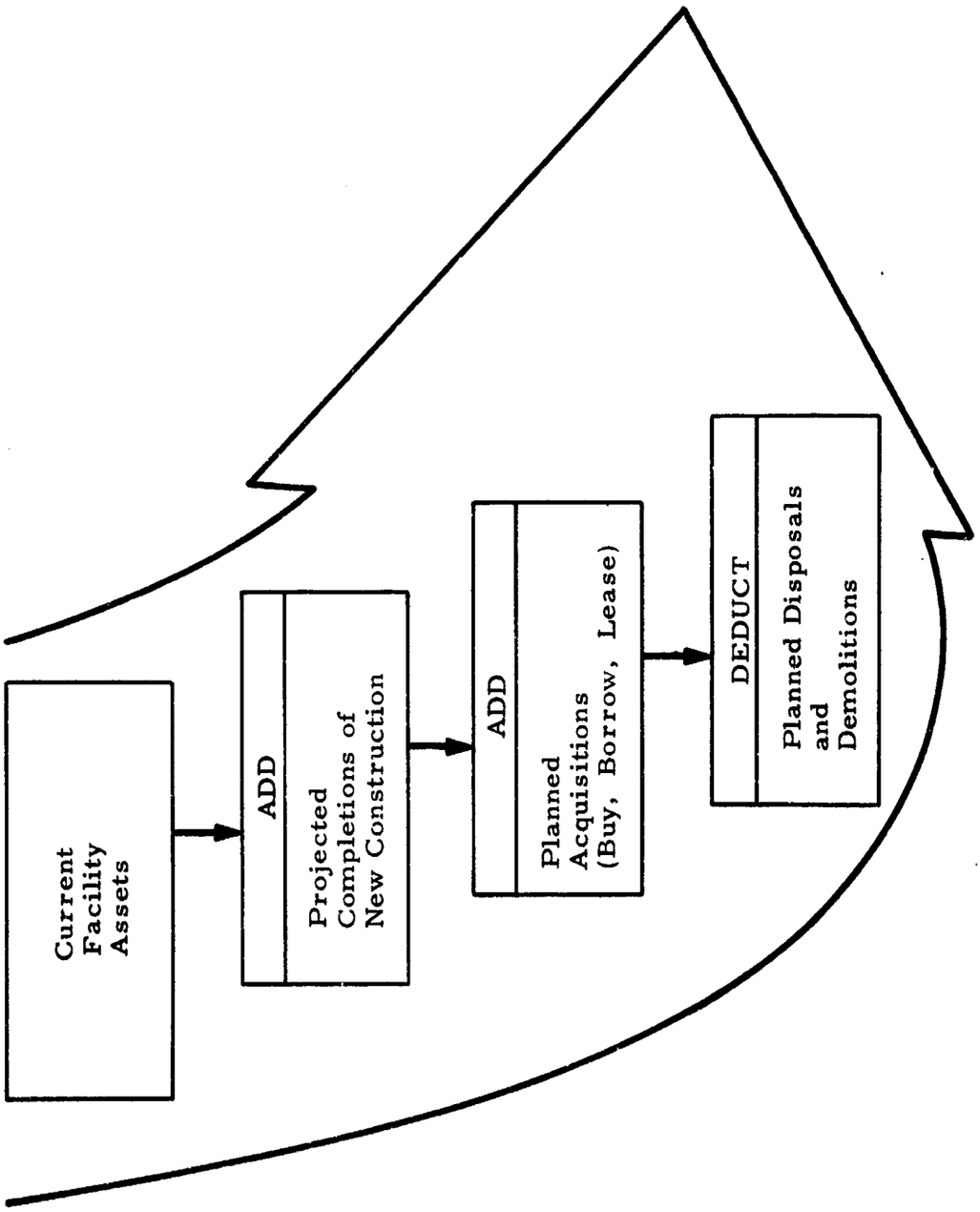

EXHIBIT II-5 PROJECT ASSETS TO BE AVAILABLE

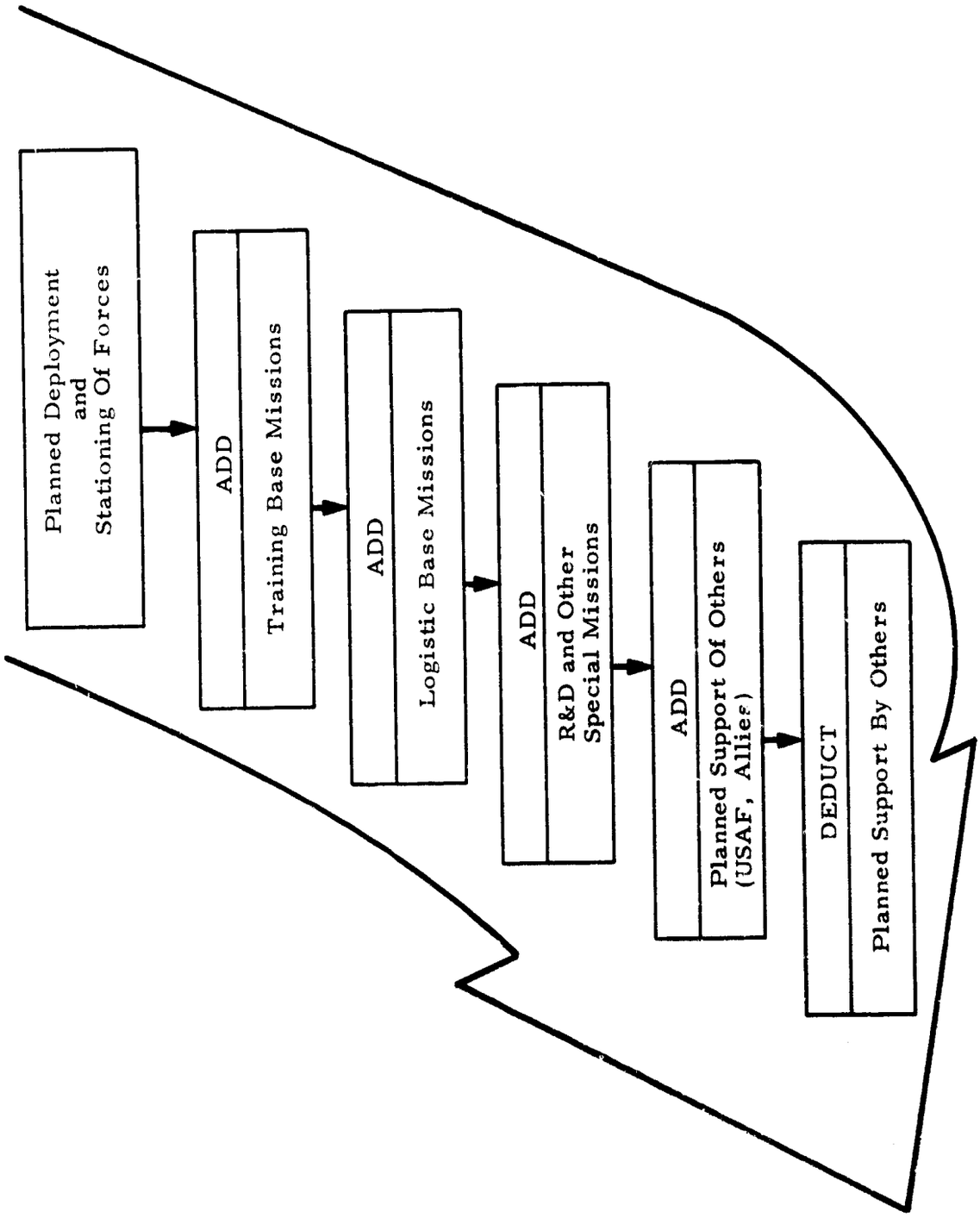

EXHIBIT II-6 PROJECT EXPECTED DEMANDS

Once these two projections--one of assets and the other of demands--are completed, a matching must be made to determine how much, and what kinds, of Army assets will be in an active status, and similarly in an inactive status, during the TY. Following this determination by facility planners, estimates of RPMA workloads are then made. Finally, from estimated workloads, the resources needed to meet those RPMA workloads are approximated. These resource needs are presented in terms of engineer manpower, inventories, new equipment, and dollars, displayed in terms of the four functional areas of RPMA. This information is then displayed to show the support to be rendered each Army mission. The base point of departure for such a display of projected resource requirements is the URR pertaining to the year just prior to the TY. Analysis of these statements of unconstrained requirements will identify RPMA efforts that would continue into the TY.

It should be noted that planning will not change the URR. However, the decisions and guidance resulting from the planning may require changes in the URR at the next update period after guidance is received at installation level.

F. RPMA Management and PPBER

The preceding subsections have presented the role of RPMA in the planning phase of PPBER. This subsection, and the ensuing sections, continue into other PPBER phases. This is approached by looking closer at RPMA's functional dimension:

RMS Functional Category	Title	Former AMS Budget Project Account
9	Operation of Utilities	9050
10	Maintenance of Real Property	9060
11	Minor Construction	9070
12	Other Engineering Support	9080

OSD has defined these RPMA functional categories, and the Army has structured its RPMA data system to satisfy the OSD definitions.

Most of the current RPMA reports, both budget and technical, are structured in these terms. Furthermore, this is a logical breakout that, though subject to minor improvements, should be continued as the basic RPMA structure.

The RPMA dimension is graphically related to the PPBER dimension in Exhibit II-7. Each large rectangle in this chart represents one of the five proposed RPMA reports in the PPBER cycle. Each small rectangle represents one of the four functional categories of RPMA. They are shown in separate boxes to illustrate the major RPMA breakout in these reports. For example, the URR will contain four sections--one each for functional categories 9, 10, 11, and 12. Then, through the use of uniform data elements, it will be possible to follow items reported in each of the functional categories in the URR through similar items in FURR, SAWP, MYRR, and PYPR.

The PPBER phases are further discussed in Sections III and IV of this report.

While the program and budget actions shown at the top of Exhibit II-6 are applicable to documents used for the financial management of OMA, the five reports will serve to provide RPMA data as required for non-OMA financial management documents.

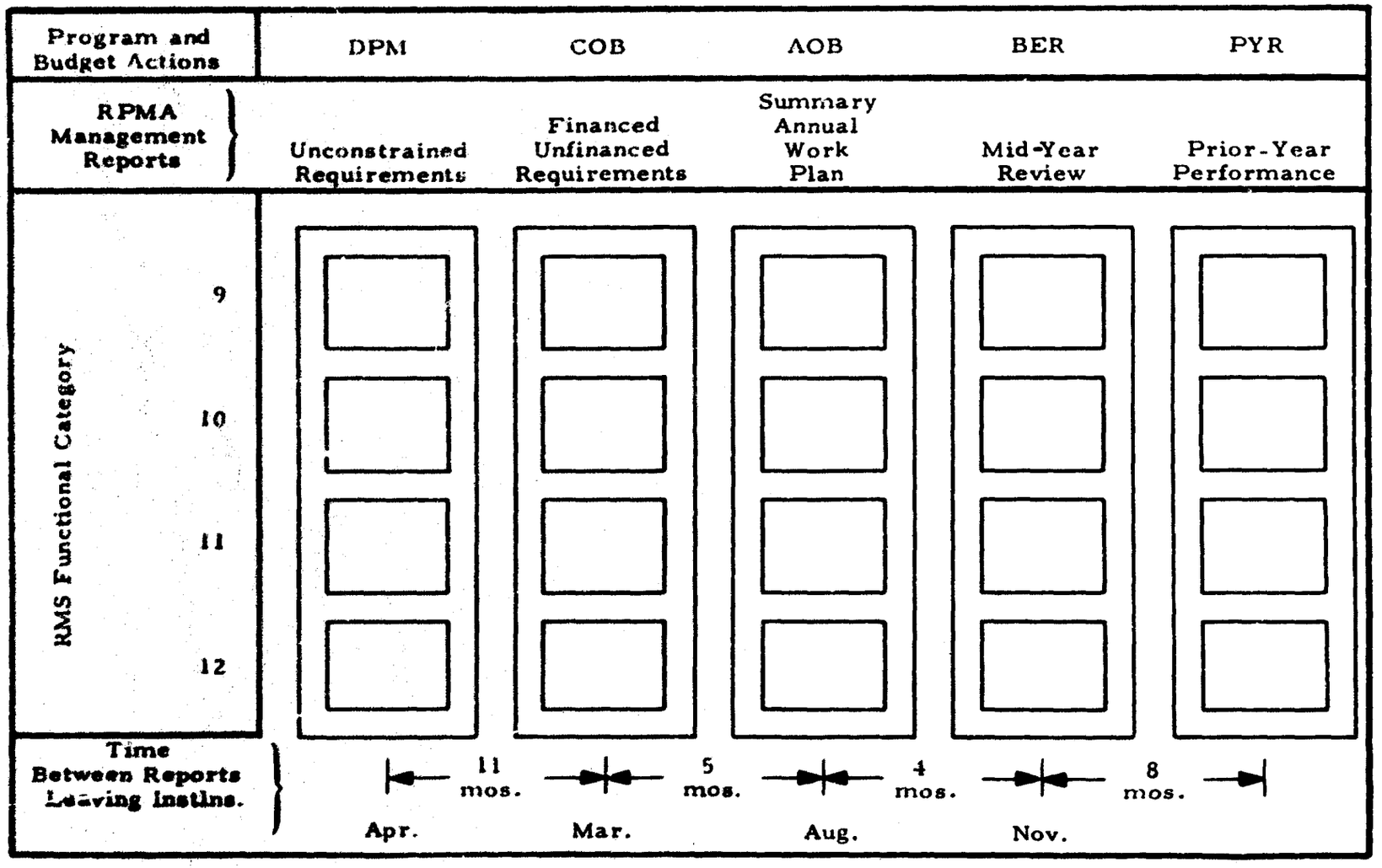

EXHIBIT II-7 RPMA MANAGEMENT CYCLE

III. RPMA FUNCTIONAL MANAGEMENT

Section II presented a concept for strengthening the functional management of RPMA and tying this functional management closely to the Army's financial management channel and budgetary cycles. This section addresses the functional management of RPMA. Subsection A deals with a number of problems that are directly related to strengthening the functional management of RPMA. They include (1) use of automation and transition from present to proposed procedures, (2) the meaning of unconstrained requirements, (3) RPMA standards, (4) procedures for determining unconstrained requirements, (5) facility condition evaluation, (6) the need for a better way to classify or group facilities, (7) means for determining priorities, (8) the impact of the self-help program, and (9) the need for closer management supervision of installed post engineer shop equipment.

Subsection B deals with proposed reports in the RPMA functional management channel. These include the URR, FURR, SAWP, MYRR, and PYPR. The second half also shows how the RPMA functional categories (operation of utilities, maintenance of real property, minor construction, and other engineering support) will be treated at the installation level and at echelons above the installation.

The RPMA functional concept described in this section applies to all RPMA activities, regardless of funding source. While the discussion and the examples apply primarily to RPMA activities funded from OMA sources, the same principles apply to RPMA activities funded from other sources such as the Military Family Housing Account (MFHA) and the Army Industrial Fund (AIF).

The sample reports shown are not complete; they serve only to illustrate the concept, not to show complete solutions. While they are generally correct for the areas covered, they leave many areas unaddressed. Exhibit III-11, for example, is complete for water service, but not for sewage, electric, heating, and air conditioning. Actual content of the reports proposed in this document will be determined during

Phase IIB as a part of system design. Any considerations that apply to special applications such as research and development, military family housing, and industrial funding will be addressed at that time.

A. Problems Related to Strengthening Functional Management

1. Transition From Present to Proposed Procedures

How does the proposed concept for an improved RPMA management information system relate to the present system of RPMA management? What currently accepted work management and planning procedures will be displaced, and what new ones will be imposed? And how does automation at the installation level fit into the picture?

With regard to current procedures, the present doctrine on post engineer work management and planning, as expressed in AR 420-17 and DA Pamphlet 420-6, forms the platform on which the new system will continue to be built. The basic tenets of the current system appear sound, and the Army has made considerable progress in the last 5 years in improving its facilities engineering work management system. The formal documentation of the present system consists of a number of plans, orders, and reports, the most important of which are the Long-Range Work Plan (LRWP), the Annual Work Plan (AWP), job orders, the Technical Data Report (TDR), and the CAUO Report. While the proposed new system will replace all of the present plans and reports (but not operating, service, and job orders), the content and basic purpose of these plans and reports will continue.

What is now in the LRWP will be included in the URR;[1] what is now in the AWP will be included in the FURR and the SAWP; and what is now in the TDR and CAUO Report will be included in the PYPR. The evolutionary changes introduced in the proposed new system are needed to correct the deficiencies mentioned above. Although all of the important plans and reports used in the present system will be replaced by

[1] The TY will be presented in detail; the three subsequent years, in brief.

other plans and reports that are synchronized with the budget cycle, none of the excellent practices now being used will be abolished.

With regard to the impact of automation at installation level, there is a need for planned phasing from present manual methods to computer-assisted methods of planning, accounting, and reporting. The URR, FURR, SAWP, MYRR, and PYPR are presented in the following section as manually developed plans and reports. This presentation will allow for interim manual implementation possibly on a pilot basis to allow for corrections and improvements prior to automation. It should be recognized, however, that manually prepared reports will provide only that information indicated on the report formats. Without automation there will not exist the capability to retrieve and manipulate detailed backup data used in preparing the reports. The entire RPMA portion of the IFS data base would not be available for manipulation, use, and integration with other portions of the IFS data base. For example, lack of automation would prevent effective transfer and manipulation of RPMA data that would be required to determine the economic impact of projected troop stationing plans. The transition from manual to automated mode should therefore be accomplished as rapidly as possible in order to fully utilize the complete IFS data base. The post engineer would then enter new planning and operating data into the IFS data base and the computer would generate the necessary reports and data transfer to the echelons.

PRC believes that computer-assisted RPMA management at the installation level would improve efficiency of post engineer operations. The Army has progressed toward this goal with such systems as SPEED and SPEEDEX (Systemwide Project for Electronic Equipment at Depots - Extended) and the automated post engineer program at Fort Huachuca, Arizona. Although these are excellent programs, they are designed to assist present manual procedures and do not address the RPMA management information system proposed in this document. Therefore, during the design phase, PRC will recommend additional automated work management procedures at the installation level to support the system concept presented in this document.

2. <u>The Meaning of Unconstrained Requirements</u>

The keystone of the RPMA concept presented in this document is the early systematic generation and projection of RPMA requirements.

The subject of RPMA requirements is complicated by a number of factors such as priorities, "hard core" needs, and commanders' desires. PRC's analysis has, however, revealed that RPMA standards approved by HQ DA form the best basis for generation of RPMA requirements. The subject of RPMA standards is treated in the next section. Suffice it to say here that these HQ DA-approved standards form the basis for determining the requirements reported in the URR.

The term "unconstrained" has been selected to describe the type of requirement that will be generated and forecast for planning early in the budget cycle. Another term that might have been used is "basic," for these requirements represent only what is needed to meet the standards established and approved by higher authority.

The term "unconstrained" does not imply that the process of generating requirements is without limits. Rather, it shows that the post engineer is not constrained by predetermined budget and engineer manpower figures when he states his estimate of work to be done and resources required. He is, however, restrained to develop only those requirements which are based upon approved standards. The following definition is therefore proposed: Unconstrained requirements include all work necessary for the post engineer to operate and maintain the installation facilities, support his customers, and safeguard his assets in accordance with established policies and at the RPMA standards prescribed in pertinent regulations, technical manuals, and other approved RPMA documents. The term "RPMA standards" is the crux of this definition. Therefore, this term, as well as its more abstract and inclusive relative--standard of living--is discussed in the next section.

3. RPMA Standards

What is the Army's policy on standard of living for its people? Although this question has been reasonably well answered for the food and clothing aspects of living standards, it has not been satisfied for that equally important portion of living standards--shelter. Here, the factors involved seem more difficult to define, and the extremes of acceptability more widely separated.

Further questions arise: should some Army facilities be plush, others austere; should some be well maintained while others are allowed to deteriorate? Furthermore, who should answer these questions, and who should judge whether the standards established for facilities are correct and adequate? Although answers are not simple, it is certainly correct to say that the Secretary of the Army, the Chief of Staff, and commanders down through the chain of command are vitally concerned, and in the end establish the policies and make the decisions that in turn establish the Army's standard of living. And what is the facility standard they set? It might be stated as follows: Army facilities should be adequate for the job, neat, clean, serviceable, and in consonance with generally accepted middle class and big business practices; only under exceptional circumstances should Army facilities be either plush or austere; and they should never be gold-plated or slum-like.

These generalities are subject to different interpretations by different people. The best solution seems to be found in the word "standards," for standards are defined as established or accepted rules, measures, or models by which the degree of satisfactoriness of a product or act is determined. DA has established and published a variety of these rules, measures, and models by which the degree of satisfactoriness of real property maintenance activities, and in turn the Army's living standards, can be measured. These RPMA standards are diffused through a large collection of documents that serve a variety of purposes and address a variety of readers. A list of the various documents that contain HQ DA-approved RPMA standards is shown in Exhibit III-1. The problem with this listing is that there is no structured way to use it. Although the documents in the list contain all the RPMA standards established by HQ DA, the standards are not organized in a logical way. Only an expert in a particular field (e.g., paving) can quickly find, quote, and interpret the standards for his speciality (e.g., roads).

A facilities manager, either user or maintainer, interested in an overall view of RPMA standards would have to go through each document, extracting a bit of data here and a bit there. This would be a tedious

EXHIBIT III-1. RPMA STANDARDS

Document	Contents
Army Regulations —	
AR 37-100-XX	RPMA Performance Factors and Costs
AR 210-17	General Maintenance and Repair Standards for Part-Time and Inactive Facilities
AR 420 Series, Including	Policies and Directives Governing Conduct of RPMA
AR 420-44	Procedures for Determining Utilities Targets and Standards
AR 420-70	Standards for RPMA Work on Buildings and Structures
DA Pamphlets —	
DA PAM 20-551	Staffing Guide for Post Engineer Organizations
DA PAM 420-2	Workload Standards for Fire Department Personnel
DA PAM 420-5	Work Performance Standards for Post Engineering
DA Technical Bulletins —	
TB ENG 259	Instructions for Targeting and Evaluation for Utilities Utilization, and Tables of Allowances
TB ENG 405	R&U Standards for Reactivation of Inactive Facilities
TB MED 163	Standards for Swimming Pools
DA Technical Manuals -	
TM 5-600 Series	Approximately 50 Manuals Containing Guidance, Practices, and Procedures for Operation and Maintenance of Facilities
TM 5-800 Series	Design Criteria

EXHIBIT III-1 (Continued)

Document	Contents
DA Program Budget Guidance	Broad Priorities for RPMA Work Extracts and Summaries from References Listed Above
OCE Letters to Major Commands	Establish Utilities Targets for Use in the Command Analysis of Utilities Operations (CAUO) Report Updated Periodically To Reflect Changes in Costs, Population, and Facilities
OCE Guide Specifications for Military Construction	New Construction Criteria
OCE Post Engineering Annual Summary of Operations	DA Targets for 9050 Utilities Operations and DA Objectives for 9070 Minor Construction
The Engineer School Handbook for Post Engineer Management	Standard Costs for Purchase and Production of Utilities
DOD Manual 4270-1	DOD Construction Criteria
National Codes of Professional Engineering Societies (Electric Code, Fire Prevention Code, Etc.)	Practices and Specifications

and time-consuming process hardly worth the effort. Rather, what seems to be needed here is a major administrative effort to organize and categorize existing RPMA standards, particularly those which are meaningful to the using program director and those which are significant to the facility maintainer or post engineer.

How should RPMA standards be organized, and who should do the organizing? PRC's analysis of RPMA standards reveals that there are two primary types of standards--those which describe to the facility user the quality of support that he should be provided, and those which the post engineer uses to measure the efficiency with which he has performed his work. The first type establishes the approved standard of living. The second type is used to determine whether the Government received its money's worth for what it spent. An example of the first type of standard is contained in AR 420-70, which lists approved painting cycles as:

Interior:	4 to 5 years
Exterior:	Metal, 4 to 6 years
	Wood, 5 to 6 years
	Masonry, 6 to 8 years

and then goes on to say, "Approved painting cycles should be extended as much as practicable consistent with the state of deterioration of the existing coatings and the degree of protection and appearance required."

An example of the second type of standard is contained in DA Pamphlet 420-5, which shows that interior wood surfaces should be painted at the rate of 0.53 man-hours per 100 square feet.

For the purpose of distinguishing between these two types of standards, PRC recommends using the term "mission support standards" to describe the first, or standard of living, type, and "technical efficiency standards" to describe the second, or performance, type. These two types should in turn be segregated by functional category so that they will relate to the RPMA categories established by OSD. This logical ordering of RPMA standards is shown in Exhibit III-2.

The next question then is: Who should comb through the documents listed in Exhibit III-1, extract the standards, and organize them in the

EXHIBIT III-2 ORGANIZATION OF RPMA STANDARDS

	Mission Support Standards Specified Quantity and Quality	Technical Efficiency Standards Performance and Efficiency
Utilities Operations Standards	M9	T9
Maintenance and Repair Standards	M10	T10
Alteration and Construction Standards	M11	T11
Engineer Services Standards	M12	T12

manner shown in Exhibit III-2? While this is a task that a contractor could perform, OCE would be more qualified to do the work--perhaps with contractor assistance. OCE has the technically qualified professional engineers--the people who in many cases actually sponsor the standards in their present form--and it is these people who could best perform the work.

4. Procedures for Determining Unconstrained Requirements

In addition to the problems concerning definitions of unconstrained requirements and RPMA standards, another important question arises concerning the early projection of RPMA requirements: What procedures will the post engineer use to work up his unconstrained requirements based on standards? Two alternatives are presented: the first is based on the procedures specified in the present work management system; the second alternative is based on teams of inspectors collecting the unconstrained requirements. In the first alternative the present procedures work like this: The post engineer organizational element (shop) most familiar with the particular RPMA requirement describes the work to be performed or service to be provided. This element also estimates the resources (labor, materials, contracts, equipment) required to accomplish the work. Branch and division chiefs in the post engineer organization--using knowledge gained from onsite inspection, their own professional engineering judgment, and an understanding of established standards--modify, verify, and integrate the requirements forecast by subordinates. The Work Coordinating Office then assembles the information and ensures that all is properly coordinated within the post engineer organization.

The first alternative proposed in this document redefines the procedures just described, which are now being used at most installations to generate requirements for the AWP. The technique is illustrated schematically, as a flow chart, in Exhibit III-3.

Each person in the post engineer chain of command--from the craftsman to the installation commander--knows what maintenance and repair work is required to meet the maintenance and repair standards and policies that pertain to his speciality or area of responsibility.

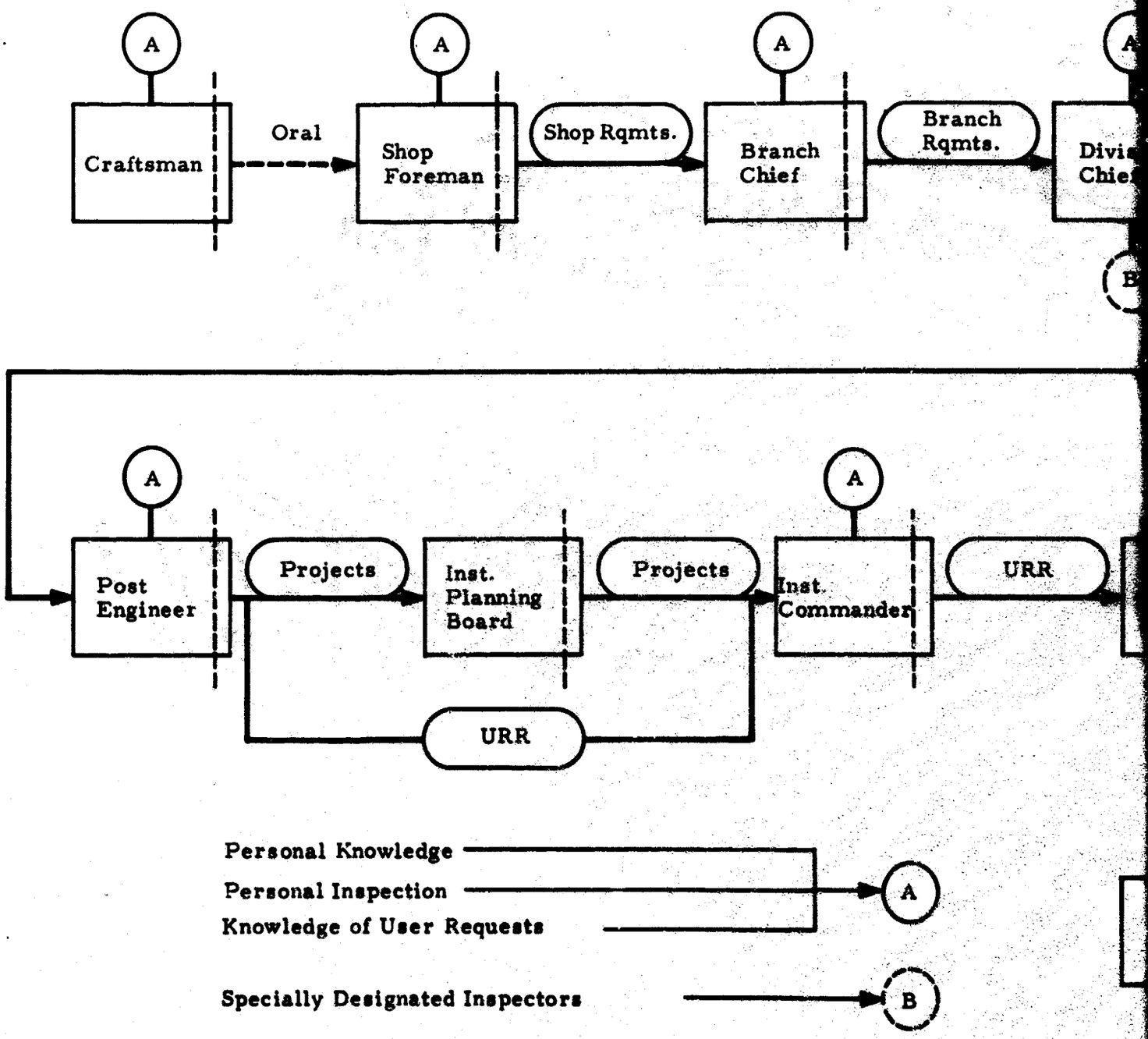

EXHIBIT III-3 GENERATION OF UNCONSTRAINED REQUIREMENTS
10 - MAINTENANCE OF REAL PROPERTY (ALTERN

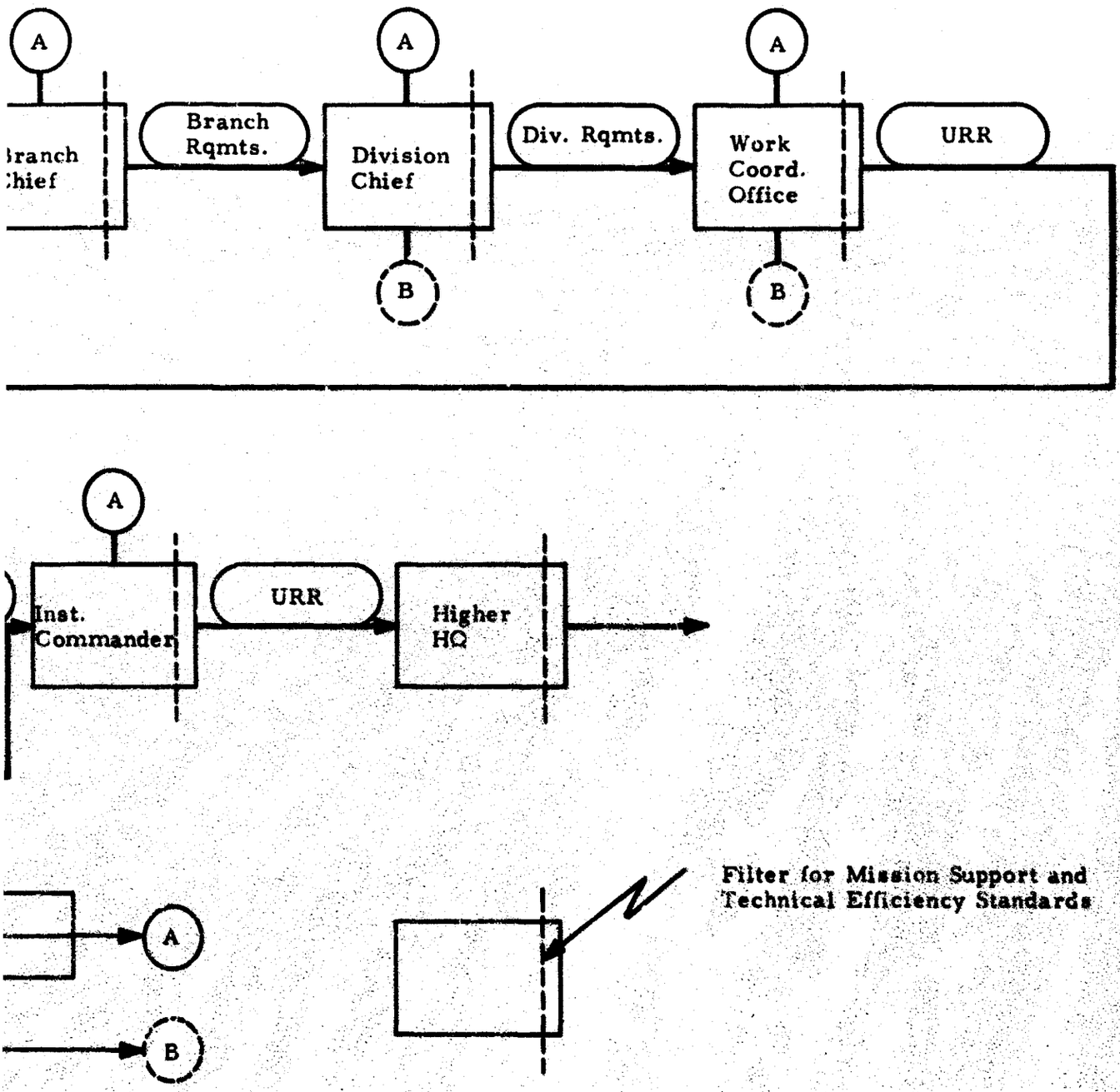

NCONSTRAINED REQUIREMENTS: FUNCTIONAL CATEGORY
E OF REAL PROPERTY (ALTERNATIVE ONE)

PRECEDING PAGE BLANK - NOT FILMED

He obtains this knowledge from several sources: from his understanding, as a tradesman or professional, of the written standards pertaining to his speciality; from personal inspections and visits to real property facilities themselves; and from requests made by facility users, who are frequently the first to detect and report maintenance and repair deficiencies.

When requirements are generated from the lowest level, as shown in Exhibit III-3, each succeeding person in the organizational structure has an opportunity to review the recommendations made by his subordinates. Then, using his own broader scope and understanding, each successive supervisor can reduce, modify, or add to the recommendations of his subordinates.

For example, a carpenter who has worked in many areas of the installation may realize that the doors in one particular area are, through continuous wear and tear, degenerating to the point where they will need to be replaced or completely rebuilt. He reports this to his shop foreman, who, with knowledge of maintenance and repair standards for doors, makes an initial estimate of requirements and furnishes this information to his branch chief.

The chief of the buildings and structures branch then inspects the doors in the area reported by the carpenter shop foreman. He reviews the requirements estimate in light of his knowledge of existing standards and work requests made by the building occupants, makes appropriate changes, and sends the forecast requirement to the chief of the buildings and grounds division. The chief of buildings and grounds in turn modifies, changes priorities, or redirects his branch chief's recommendations if they do not agree with his own interpretation of established standards and knowledge of plans for use of the area. The branch and division chiefs in the Buildings and Grounds and Utilities divisions and the chief of the Work Coordinating Office are key individuals in the process. As shown in Exhibit III-3, while they obtain feeder information from their craftsmen and shop foremen, they do not rely entirely on this information. Rather, they use the information obtained from

their subordinates and supplement it with their own knowledge of customer requests and what is required to meet established standards.

Examples of backup and feeder forms that could be used as basic documents in the procedure described above are shown in Exhibits III-4, III-5, and III-6. Exhibit III-4 is an example of backup data submitted by the carpenter shop to the buildings and structures branch; Exhibit III-5 is an example of a feeder data form submitted by the buildings and structures branch to the buildings and grounds division; and Exhibit III-6 is an example of a feeder form submitted by the buildings and grounds division to the work coordinating office.

These are the basic forms on which maintenance and repair requirements are collected and reported. Note that each shop records the appropriate facility group and describes the maintenance and repair work that will be required on the facilities.

In addition to a description of the required work, the forms provide entries for facility component, category of work, priority, resources required, and standards reference. The identification of facility component is important to both the maintainer and the user. For the maintainer, it will indicate those parts of a facility which require special attention, and to the user it will indicate an impact of facility condition. For example, if a great deal of work needs to be done on heating systems, it will warn the user that his barracks may be cold if required funds are not provided.

The entries for category of work are provided to aid in the planning and management of maintenance and repair work. These categories--consisting of standing operation orders (SOO), service orders, and individual job orders (IJO)--require different management techniques and procedures.

The entries for priority are important to program directors at each echelon who are faced with the problem of making equitable distribution of available assets. The shop foreman is the first to assign a priority number (1, 2, or 3) to a line item of work. His assignment of priorities is examined and possibly rearranged by his superiors up the chain of command.

EXHIBIT III-4 SAMPLE WORK REQUIREMENT, SHOP LEVEL

Subject: Forecast Work Requirement

From: Carpenter Shop Foreman

To: Chief, Bldgs. & Structures Branch

1. Facility Group: Mobilization Barracks
2. Building Number(s): 200-300
3. Building Component: Doors
4. Work Description: Repair approx. 50 doors
5. Category of Work: I.J.O.
6. Priority: 1
7. Labor Estimate: 50 man-hours
8. Materials: 10 sheets plywood, 25 ft. 2X4, 5 sheets glass, 5 lbs. nails
9. Contract or In-House: In-house
10. Standards Reference: —
11. When Required: FY 72
12. Remarks: Due to wear and tear on cheap doors

One of the primary purposes of the URR is to show requirements for manpower and dollar resources. These requirements are recorded on the feeder forms in entries for labor, materials, and contracts, which provide the basic source for substantiation of stated requirements. The entries for labor, which show both man-hours and dollars, are added at the branch level or above. They are an estimate of the in-house engineer manpower that will be required to accomplish the maintenance and repair work described. Man-hour estimates are made at the shop level or above, and dollar estimates are made at the division level. The entries for materials are an estimate of the cost of materials that will be consumed in accomplishing this work. These figures should, if possible, be supported by a rough bill of materials, which can be used by the supply and storage division for long-range planning.

Often, either because of manpower shortages or the technical nature of the requirement, it is more appropriate to accomplish the work by contract than by in-house forces. In these cases, an estimate of contract cost is entered and coordinated with the engineering and services branch.

The final entry on the feeder form is a reference to the written maintenance or repair standard that substantiates the need for the work. Exhibit III-7 shows some of the documents containing RPMA mission requirement and technical efficiency standards that craftsmen and supervisors would use to determine RPMA requirements.

Although many feeder data collection forms have been illustrated, they need not all be used at every installation. If the post engineer feels that use of all the forms would generate too much paperwork, his organization could still produce the URR without actually reducing all the supporting information to writing. Intermediate echelons and the installation would work out details on how much feeder and backup data would have to be recorded. Although the same general steps would be followed, the amount of backup data that would be made a matter of record would depend on the local management at each installation. Furthermore, when post engineer planning and work management procedures become automated, written reports will no longer be made.

EXHIBIT III-5 SAMPLE WORK REQUIREMENTS, BRANCH LEVEL

Facility Group	Bldg. Number(s)	Bldg. Component	Work Description
Barracks, Permanent	130-160	Roofs	Repair minor leaks
	127-129	Roofs	New roofs
			-----more entries-----
Barracks, Mobilization	200-300	Doors	Repair approx. 50 doors
	206	Other	Replace 5 wood foundation posts
			-----more entries-----
Mess Halls, Semipermanent	174, 184	Floors	Repair 2,000 ft.^{2} warped floors
			-----more entries-----
Mess Halls, Permanent	165, 167	Paint	Repaint interior

Note: Will have attached a list of required mobile and installed equipment as well as materials a

Forecast Work Requirements

From: Chief, Bldgs. and Structures Branch
To: Chief, Bldgs. and Grounds Division

Description	Category of Work (SOO,SO, IJO)	Priority (1,2,3)	Labor MH	Materials	Contract	Standards Reference
	SO	1	25	See attached list	No	TM 5-617, par. 10a
	Project	2	300	See attached list	Yes	TM 5-617, par. 11
'e entries-----						
›rs	IJO	2	50	See attached list	No	–
ation posts	IJO	1	10	See attached list		–
e entries-----						
ped floors	Project	3	100	See attached list	Yes	–
e entries-----						
	Self-help	3	80	See attached list	No	–

well as materials and supplies required.

PRECEDING PAGE BLANK - NOT FILMED

EXHIBIT III-6 SAMPLE WORK REQUIREMENTS, DIVISION LEVEL

Facility Group	Painting				Roofs				Floors		
	Labor		Matl.	Contr.	Labor		Matl.	Contr.	Labor		Mat
	MH	$	$	$	MH	$	$	$	MH	$	$
Priority 1:											
Barracks, Permanent	XX	XX	XX	XX	XX	XX	XX	XX	XX	XX	XX
Barracks, Mobilization	XX	XX	XX	XX	XX	XX	XX	XX	XX	XX	XX
Messhalls, Semipermanent	XX	XX	XX	XX	XX	XX	XX	XX	XX	XX	XX
	- - - - - - - - -				- - - - - - - - -				- - -more entri		
Priority 2:											
Barracks, Permanent	XX	XX	XX	XX	XX	XX	XX	XX	XX	XX	XX
Barracks, Mobilization	XX	XX	XX	XX	XX	XX	XX	XX	XX	XX	XX
Messhalls, Semipermanent	XX	XX	XX	XX	XX	XX	XX	XX	XX	XX	XX
	- - - - - - - - -				- - - - - - - - -				- - -more entri		
Priority 3:											

PRECEDING PAGE BLANK - NOT FILMED

Forecast Work Requirements

From: Chief, Bldgs. and Grounds Division
To: Chief, Work Coordinating Office

	Floors				Walls, Ceilings, Prtns.				Windows and Doors				Other			
Contr	Labor		Matl.	Contr.	Labor		Matl.	Contr.	Labor		Matl.	Contr.	Labor		Matl.	Contr.
$	MH	$	$	$	MH	$	$	$	MH	$	$	$	MH	$	$	$
XX	XX	XX	XX	XX	XX	XX	XX	XX	XX	XX	XX	XX	XX	XX	XX	XX
XX	XX	XX	XX	XX	XX	XX	XX	XX	XX	XX	XX	XX	XX	XX	XX	XX
XX	XX	XX	XX	XX	XX	XX	XX	XX	XX	XX	XX	XX	XX	XX	XX	XX
- -	- - more entries - -				- - - - - - - -				- - - - - - - -				- - - - - - - -			
XX	XX	XX	XX	XX	XX	XX	XX	XX	XX	XX	XX	XX	XX	XX	XX	XX
XX	XX	XX	XX	XX	XX	XX	XX	XX	XX	XX	XX	XX	XX	XX	XX	XX
XX	XX	XX	XX	XX	XX	XX	XX	XX	XX	XX	XX	XX	XX	XX	XX	XX
- -	- - more entries - -				- - - - - - - -				- - - - - - - -				- - - - - - - -			

PRECEDING PAGE BLANK - NOT FILMED

EXHIBIT III-7 USE OF STANDARDS IN DETERMINING UNCONSTRAINED M&R REQUIREMENTS

	TM 5-600 Series	AR 420-Series	AR 210-17 AR 420-70	LOM STD AR 420-10	DA PAM 420-5
Craftsman	M				
Shop Foreman	M	M	M		
Branch/Div. Ch.	M	M	M	M	T
Work Coord. Ctr.	M	M	M	M	T
Post. Engr.		M	M	M	T

Note:

M = RPMA mission requirement standard
T = RPMA technical efficiency standard
LOM STD = Level of Maintenance Standard

The second alternative for collecting the post engineers' unconstrained maintenance and repair requirements is to use teams of inspectors. In addition to collecting RPMA unconstrained requirements, the inspectors would also collect facility condition data, as proposed in PRC R-1209, Facility Condition Field Test and Impact Analysis for the Integrated Facilities System, Vol. VI, Part 2, September 1969.

There are many advantages to using teams of inspectors. The two primary advantages are uniformity and credibility of estimates. The inspectors would be fully trained and certified to ensure a degree of uniformity from installation to installation. The use of inspectors and the backup data generated in collecting requirements would lend credibility to the RPMA unconstrained requirements and condition data. A further advantage in the use of inspectors to collect unconstrained requirements is that the same inspectors would also collect the facility condition data since comparable skills are required for identifying, collecting, and estimating both sets of data. A fourth advantage with the use of inspectors is that the operating personnel would not be diverted from their primary task of maintaining and would not be burdened with the additional paperwork of collecting future requirements.

As shown in the flowchart in Exhibit III-8, the inspectors would perform those functions that the craftsmen and other operating personnel must perform in identifying project requirements in the first alternative. The branch chiefs and division chiefs would continue to project those requirements that cannot be identified through inspection, such as an estimate of service orders, standing, operating orders, and those projectable projects such as painting, reroofing, and road treatment, which must be accomplished to meet established maintenance cycles. This input, as well as that of the inspectors, would be assembled by the WCC in preparing the URR. Project requirements identified by the inspectors would be available to the division and branches for use in the later preparation of their input to the annual work plan.

The inspector's method of collecting requirements would be similar to that outlined in the first alternative. Through personal inspection of a

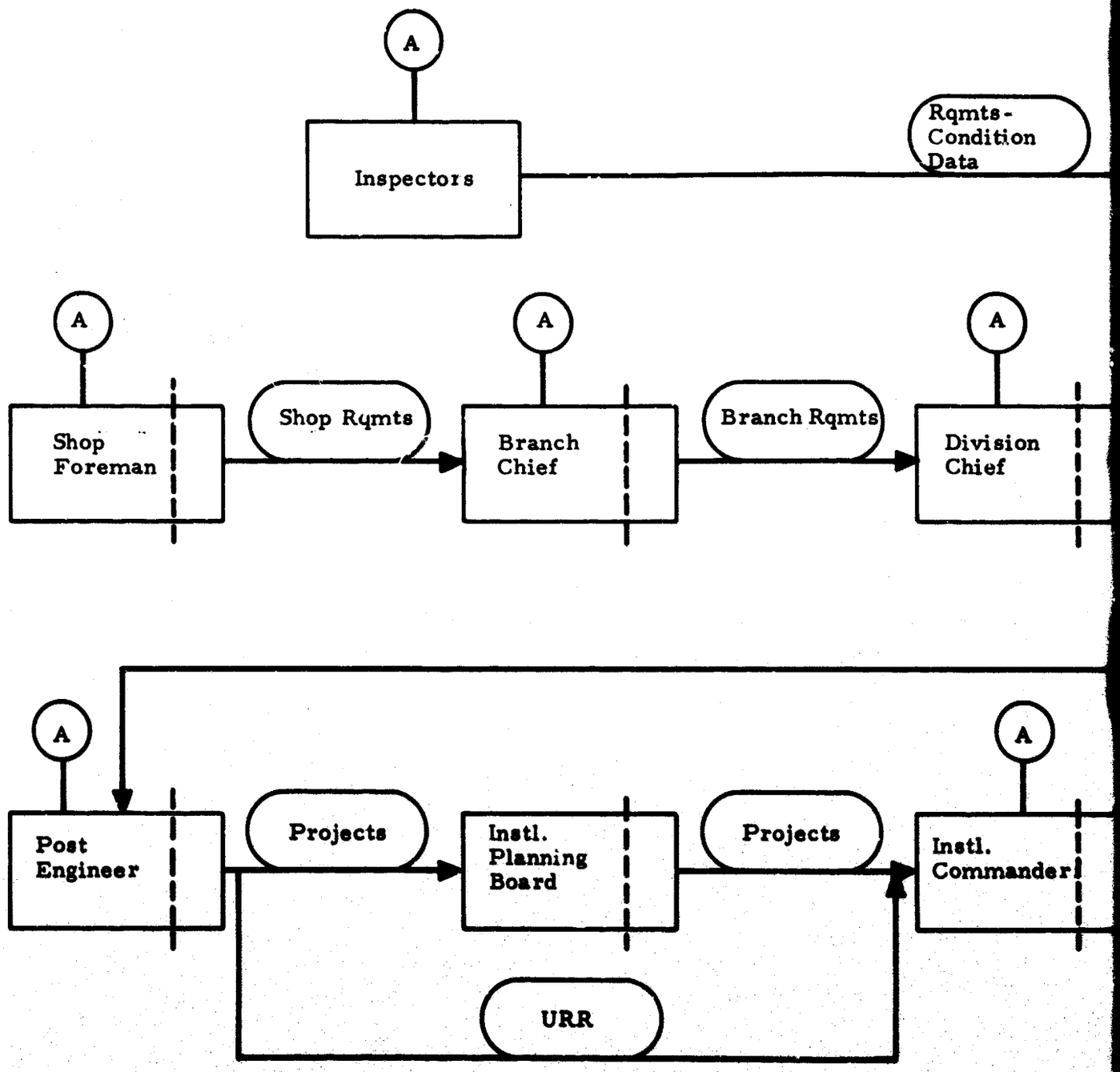

EXHIBIT III-8 GENERATION OF UNCONSTRAINED REQUI
MENTS: FUNCTIONAL CATEGORY 10 - M
(ALTERNATIVE TWO)

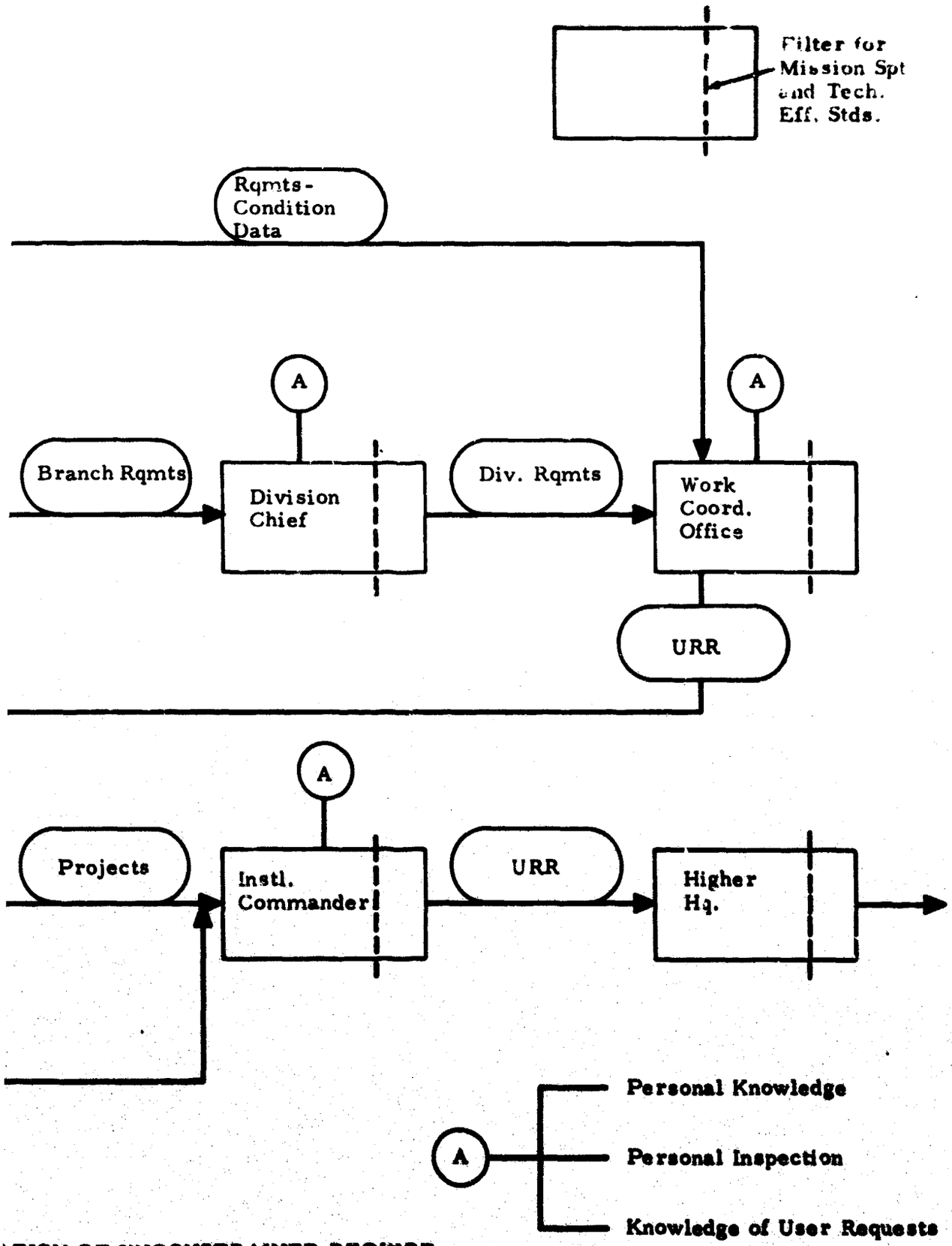

ATION OF UNCONSTRAINED REQUIRE-
FUNCTIONAL CATEGORY 10 - MORP
NATIVE TWO)

PRECEDING PAGE BLANK - NOT FILMED

facility, discussions with the facility users and post engineer shop personnel familiar with the facility, and knowledge of the applicable standards, the inspector could identify requirements.

Many aspects of an inspection system remain to be settled, including the number of inspectors, their grade level, their organizational location, and the method of implementation. In determining the number of inspectors for each installation, one important aspect is the factor to be used, for example, 2 man-hours per 1,000 square feet of the facility. A pilot test similar to that conducted in the facility condition area may help answer these and other questions. Yet to be determined also is the grade level for the inspectors, whether they would be experienced craftsmen each familiar with a number of crafts (such as the estimators in the WCO), construction inspectors (such as those found at the district level), or professional engineers.

A third major uncertainty is whether the inspectors should be assigned within the post engineer organization or assigned to high headquarters, such as the major subordinate command or an outside agency such as the District engineer. The desirability of a statement of unconstrained requirements from the installation and the fact that post engineer personnel at an installation would be most familiar with its facilities are two arguments for placing the inspectors within the post engineer organization. Against these arguments is the greater objectivity gained by use of outside inspectors.

Implementation depends on the resolution of the preceding questions although some principles seem clear. Since the initial collection of the RPMA unconstrained requirements and facility condition data would be a considerably greater effort than the updating of the data thereafter, the initial collection process should be phased to equalize the initial collection and updating workload. Secondly, representation on the inspection team from a higher headquarters would be desirable during the initial collection phase to help ensure objectivity and uniformity of estimates.

In summary, the pros and cons of the two alternatives can be stated as follows:

Alternative 1. Use present post engineer organization to obtain RPMA requirements data.

For: No additional cost.

Against: (1) Puts additional administrative burden on shop personnel and diverts them from their primary jobs.

(2) Does not provide for adequate standardization of inspections and therefore reduces credibility of results.

(3) Does not provide for collection of facility condition data.

Alternative 2. Use teams of trained and certified inspectors to obtain RPMA requirements and condition data.

For: (1) Reduces administrative burden on shop personnel and permits them to spend their time on their primary jobs.

(2) Provides for standardization of inspections and credibility of results.

(3) Provides for collection of facility condition data.

Against: Will cost between $2 million and $3 million per year to implement (see PRC R-1209, Vol. VI, Part 7, p. V-28).

In view of the urgent need for credible RPMA requirements and condition information at each echelon, the second alternative appears to be more desirable than the first.

5. Facility Condition Evaluation

A topic closely associated with RPMA standards and the determination of unconstrained requirements is facility condition evaluation. As was reported earlier in the analysis of the RPMA management area, one of the inherent difficulties of this activity has been the absence of a way--a language--to justify or explain RPMA resource requirements in terms of what effect the resources requested will have on either the facilities or the missions of those who use the facilities. Implicit too has been the need for a language for portraying some of the effects and impacts of RPMA effort. Emerging from its feasibility tests, the facility condition method already shows promise as a valuable tool not only for RPMA but for other areas of IFS as well. Some of the most significant potential management applications are listed below.

a. An Aid, at All Levels From Installation to HQ DA, to the Allocation of Resources

An installation commander is given a way to measure and appraise the effect of his alternative allocations of funds to support his RPMA as opposed to other installation activities. The commanders of each MSC and MAFC can likewise appraise the comparable alternatives at their respective levels. At HQ DA the RPMA proponent will be assisted in presenting his resource requirements to the director of each program supported by being able to include in his justification condition impact information. Each program director, like the field commanders, will thus be aided in his appraisal of RPMA needs versus other program requirements. The same condition language is available throughout the regular planning, programming, and budgeting cycle as well as at any time that resource decisions, allocations, or reallocations must be made.

b. An Aid, Within the RPMA Management Area, to Decisions on Where To Put Emphasis

At the installation, work management would be aided by having condition information as a convenient guide to the placement of emphasis and effort. Moreover, by grouping facilities in mission packages, the facility manager could, through the C-ratings, readily determine whether all facilities supporting a priority mission are being kept at the same condition level. Such a display for a high-priority airfield might show the air strip to be C1 (top condition) but the hangars and control tower to be C3 (marginal condition). This same grouping of the support related to specific missions could also be used effectively at HQ DA to explain and interpret RPMA support to the interested program directors.

c. Analysis of Condition Changes and Trends From Year to Year Could Assist Performance Evaluation, Detect Trouble Spots, and Disclose Impact of Insufficient RPMA Resources

Evaluation of performance in terms of resources expended versus improvement in condition realized could be used as a tool for comparison of performance among several installations or commands.

Within a single installation, a trend analysis that showed continuous lowering of facility condition despite application of more than normal amounts of RPMA effort could point to a facility that should be considered for replacement, or could suggest inefficiency, poor training, supervision, tools, or materials. It might even reveal destructive habits of tenants. Lastly, most downward condition trends, when related to the unconstrained requirements of a facility as compared with actual resources made available, would provide a useful measure of the impact of resources denied.

d. Collection of Condition Data, an Aid to Both Facility Planning and Preventive Maintenance

Collection of condition data over a period of a few years would create a fund of historical data of value to the facilities planners, cost analysts, and staff officers confronted with quick-response, "what if" type questions pertaining to RPMA support of plans, programs, or special projects.

Finally, the condition data collection process itself tends to identify potential maintenance problems before they come to the attention of the tenants, thus strengthening the post engineer's position in performing his prime mission--providing support to the facility user. The facility condition system enhances the preventive maintenance program by identifying areas that need immediate attention. Furthermore, if specially designated inspectors are appointed to make facility condition inspections, the results of their inspections will be included in the techniques used to determine unconstrained requirements.

6. Continuous Collection

The process of generating unconstrained requirements and determining facility condition continues throughout the year. Whenever a new requirement for maintenance and repair work becomes known through facility user requests, identification by post engineer shop personnel, or through updating inspections, it is added to a reservoir of known work requirements. Entries, made continuously through the year, will feed into this reservoir of requirements, and from this reservoir the post engineer will draw the unconstrained requirements for the TY.

It is from this reservoir that facility condition, the work plan for the CY, financed work for the BY, and projected requirements for following years will actually be derived. Thus, only at the time when the URR is submitted (immediately following the financed/unfinanced report for the coming BY), will a cutoff be made showing the work that should be done in the TY following the BY. Decisions as to what work should be financed in the BY and what work should be done in the TY will be made as a result of a review of all known work requirements at the time of receipt of budget guidance for the BY. A water analogy chart showing the relationship of work generation procedures to planning for a 5-year period corresponding to the FYDP period is shown in Exhibit III-9.

7. Groups of Similar Facilities

Another question that must be answered in the presentation of a concept for a strengthened RPMA functional management system is: How should facilities be identified and classified for RPMA management purposes?

PRC's Assets Storage and Retrieval (AS&R) team has analyzed the facility assets accounting area during Phase IIA of the IFS contract. Their report, which was published in November 1969, addresses assets information required by facility managers. It proposes that assets reports be furnished to users and maintainers at all echelons. One of these reports, for example, is a "Tenant Assignment Report," which furnishes information on the utilization of facilities by specific tenants for such management areas as:

Post Engineer	Director of Services[1]
Real Estate and Real Property Reporting	Facility Planning
Lease Management	Supply Storage
Maintenance Work Management Center	Building Assignment
Master Planning	

This example is structured for the installation level. It can be restructured for use at management levels above the installation.

[1] G-4/Deputy Chief of Staff for Logistics (DCSLOG).

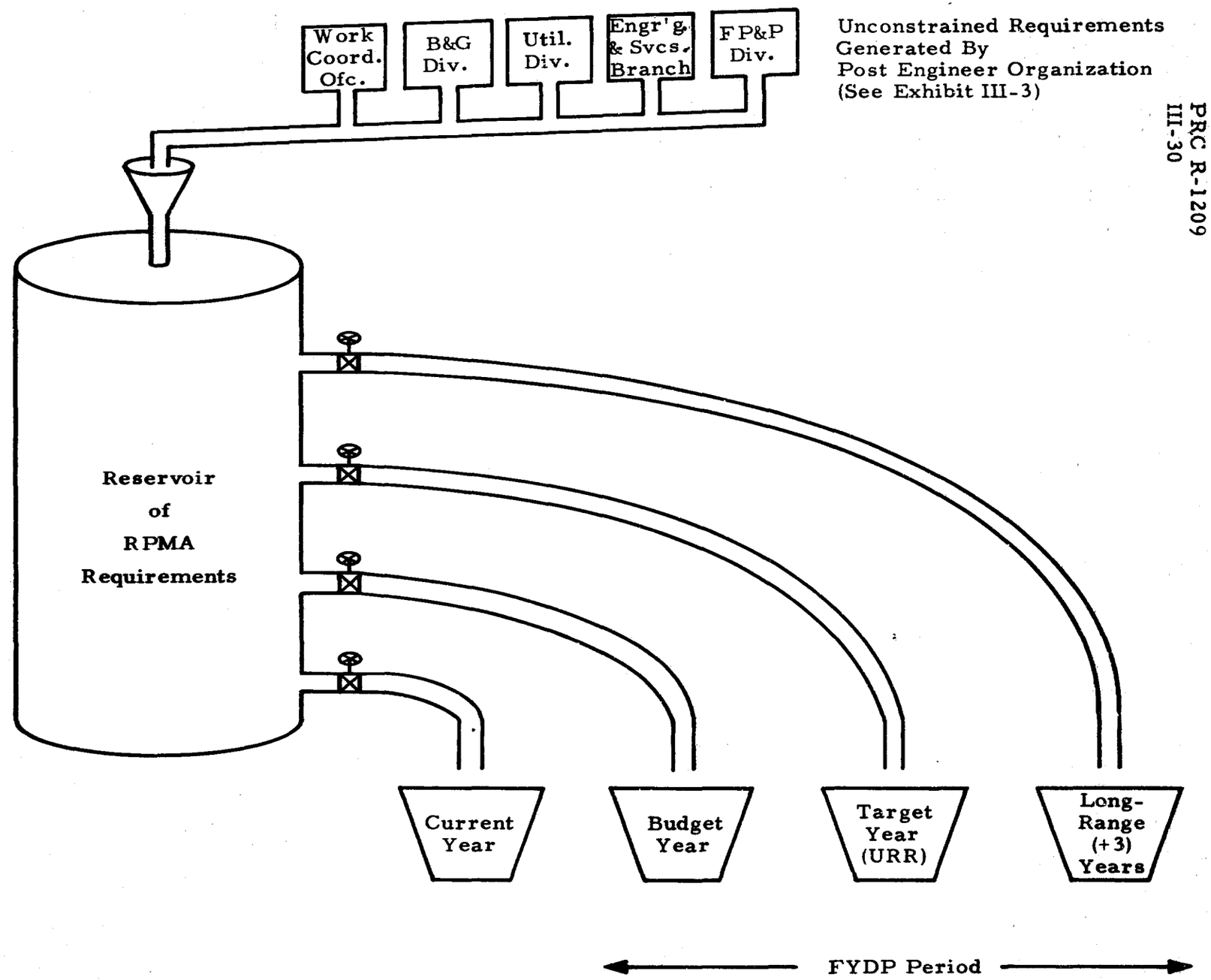

EXHIBIT III-9 RELATIONSHIP OF UNCONSTRAINED REQUIREMENTS TO YEAR OF EXECUTION

If the RPMA reports used in the concept recommended in this document are to be useful for facility management, they must identify facilities by using descriptions that are characteristic of whole groups or classes of facilities. Higher level mangers could make little use of RPMA reports that listed thousands of individual facilities.

The problem then is how to group or classify facilities in a way that will be most useful to facility managers. The OSD FC&CCC places facilities by primary groups. Another grouping could be by age, another by size, still another by type of construction. Each of these classifications, when used alone, has shortcomings, for it does not reveal the entire picture. What is needed is a new classification that will combine the attributes of use, age, condition, and quality or type of construction. Such a listing could be very large. However, to be most useful to management, it should be limited to 50 or 60 line items.

These groups should be composed of homogeneous types of facilities. For example, all mobilization-type barracks built in the same time period, refurbished under a DA-sponsored program (Bruckerized), and in approximately the same condition would be classified as a group of similar facilities.

One of the purposes of classifying facilities into groups as proposed here is to make it possible for higher headquarters to make meaningful aggregations. Therefore, the line item listing of possibly 50 to 60 groups of similar facilities should be published by HQ DA and used Army-wide. This listing will be produced during Phase IIB of the IFS project. In addition to providing the required standardization, the listing will provide, to the users (program directors) and the maintainers (post engineers) at all echelons, descriptions that will help them visualize the facilities. An example might be "WWII mobilization barracks."

At each installation, the G-4 and the engineer analyze all facilities on the installation and, using the DA listing of uniform groupings, publish a master list of appropriate groups. This master list then forms a line item basis for management of facilities. It shows each user what facilities he is occupying, and it shows each element of the post engineer organization how these groupings relate to his responsibility. For example, with this listing, the chief of the buildings and structures branch

will be able to direct his effort toward those buildings which are most critical to the installation missions and those in greatest need of maintenance.

8. Priorities

A system of priorities for RPMA management is necessary to assist decisionmakers at all echelons in ensuring that the most essential RPMA work is funded and executed. At the present time, a formal procedure for attaching priorities to projects exists at many installations in the form of a post planning board. The board comprises representatives of the various installation occupants and the post engineer, who determine the recommended order in which major post engineer projects are to be accomplished.

Another example of the use of a priority system for facility management can currently be found at the installation level. In the post engineer organization, the AWP is prepared with sections on projects and mobile equipment acquisitions listed in priority order. Upon receipt of the January PBG at the installation, the post engineer organization divides the AWP into financed and unfinanced portions--a task that is simplified by the existence of the lists of equipment acquisitions and projects, in priority order.

A system of priorities for facilities management appears to be most lacking at higher echelons, where decisions to allocate resources for facilities management could be improved by establishing a priority system. The program element director would be much aided if he knew the priority of items affected by a budget reduction (as well as the impact of such a reduction).

Such a priority system for RPMA management is proposed for use at all echelons, from installation through HQ DA. For purposes of discussion, a priority system consisting of three groupings is suggested. The post engineer organization would initially assign priorities to the unconstrained requirements for a particular FY over 15 months prior to the year of execution. These priorities could be rearranged and reordered throughout the budget cycle within the post engineer organization, by commanders, and by managers at higher headquarters in consultation with installation personnel.

Before discussing the three priority groups, let us examine the demands that the post engineer organization must consider in assigning priorities. First, while all unconstrained requirements may be equally justified by their foundation in Army standards, the standards themselves imply a priority ordering. For example, among projects, modifications to a post support facility such as the bowling alley or chapel would be of lower priority than a mission-related project. Secondly, guidance from higher headquarters must be considered, particularly meeting the maintenance floor and observing the priority guidance. Thirdly, the post engineer must have sufficient in-house work, of a type that matches his work forces' skills, to keep them fully employed. And finally, he must try to meet users' requests.

Items classified priority one would have the highest priority and would include initially what the post engineer organization judges most important. As a general rule, functional category 9 (operation of utilities) and nearly all functional category 12 (other engineering services) would be treated as priority one. Those portions of functional categories 10 and 11 (maintenance of real property, and minor construction) that the post engineer feels are most essential and most difficult to delay, including in-house work and perhaps some contracts and equipment acquisitions, would be treated as priority one.

The distinction between priorities two and three is more difficult. Priority two might include those items, primarily contracts and equipment, within functional categories 10 and 11 that are important and that should not be delayed. In minor construction, for example, priority two may encompass those projects which are important and justified and whose total dollar volume, when combined with those minor construction projects of priority one, would still be less than the present HQ DA objective of 15 percent of functional category 10.

Priority three would include those items which are justified, again primarily in the functional categories 10 and 11 area, but are less important than those in higher priorities, those items that might be delayed, and those items that have been impossible to do in the past due to lack of manpower or funding, e.g., some preventive maintenance.

9. Facility Components

Reports now used for the management of real property facility maintenance (i.e., the Technical Data Report and comptroller reports used throughout the budgetary cycle) contain information on the major categories of facilities (e.g., training buildings, maintenance and production buildings, roads, etc.) but not on the components that make up these facilities (e.g., floors, building shells, roofs, etc.).

The engineer functional manager is primarily concerned with maintenance of these components. Although he is interested in the broad categories of facilities contained in the 9060 series of AMS accounts, these are not enough. He needs to have more specific information on facility components. He should know about interior electrical and plumbing systems, about the cost and frequency of interior and exterior painting of buildings, and about the base as well as the wearing surface of roads. Without information on components of the facilities they maintain, managers in the functional chain have little basis for technical recommendations and decisions. It is therefore recommended that facility component information be included in appropriate reports used in the RPMA functional management channel. OCE concurs with this recommendation.

During PRC's analysis of the RPMA function, it was revealed that the present threshold for reporting mobile equipment (power-operated, construction-type equipment as differentiated from fixed or installed equipment) is $500. Here, again, it would appear appropriate to change the threshold to $1,000 to be in consonance with the OMA-PEMA breakpoint for capital assets.

B. Reports in the RPMA Functional Management Channel

Section II, which described the concept for a strengthened RPMA management information system, listed five RPMA functional management reports--one for each phase of the PPBER cycle. Subsection III.A stated that these reports would supplement or supplant present documents such as the LRWP, AWP, TDR, and CAUO Report. Subsection III.A also addressed a number of problems that spread across the entire PPBER spectrum.

This subsection addresses each of the proposed RPMA functional management reports. It contains samples of the contents of the reports and shows how each of the RPMA functional categories will be treated in each phase of the PPBER cycle.

1. Unconstrained Requirements Report

The URR will be a new report--one not required under the present system. Its development will parallel very closely the way the AWP is prescribed to be developed under the present system. Under procedures outlined in DA pamphlet 420-6, "The Work Management System," each post engineer makes up a plan for accomplishing all valid RPMA requirements for the coming BY. This "unconstrained requirement" plan is supposed to be the basis for a statement of requirements to the installation command, the installation Program Budget Advisory Committee (PBAC), and the installation comptroller. DA pamphlet 420-6 merely states that it should be prepared "in advance of the fiscal year."

The new URR for the TY would be prepared in response to the February PBG immediately after preparation of the COB for the BY. At this time, the post engineer will be able to make a fairly accurate forecast of the work he will be able to accomplish with resources available for the current FY and with resources forecast for the coming FY. With this knowledge, he will then be able to forecast his "unconstrained requirements" for the following FY.

The URR will consist of a summary sheet followed by individual sections for operation of utilities, maintenance of real property, minor construction, and other engineering support. An example of the summary sheet is shown in Exhibit III-10. The URR will also briefly address the remaining 3 years of the FYDP, now covered in the LRWP.

a. Operation of Utilities

Input to the URR for functional category 9 (operation of utilities) would be prepared by the utilities division of the post engineer organization with the assistance of the utilities branches. Once the utilities input to the URR had been prepared, it would be forwarded to the work coordinating center, where the total and summary URR would be assembled before being sent to the post engineer for his approval.

The utilities portion of the URR would cover the utilities services--water, sewage, electric, heating, and air conditioning--with a more detailed breakout similar to that found in the existing TDR and CAUO Report. For illustrative purposes, let us take water service as an example of a portion of the URR for operation of utilities. As shown in Exhibit III-11, water service might be subdivided into purchased water, filtered water, and unfiltered water; filtered water would be further subdivided into plant operations and pumping operations, and unfiltered water into chemical treatment and pumping operations.

For each category of water service, the following data would be provided, where applicable: a factor or unit of measure, such as gallons in thousands; targeted quantities as determined by the procedure outlined in AR 420-44 and TB Eng 259; costs broken into labor, material and supplies, and contracts to permit preparation of the URR Summary Sheet, per capita usage, and priority. All operations of utilities would be considered priority one.

Since the data broken into program elements are useful at all echelons for technical management and budgetary considerations, the work coordinating center at each installation would prorate these major utility services among all program elements represented at the installation, according to some mutually agreed upon formula (see Exhibit III-11). Such a formula might be based on the percentage of total installation population represented by each program element, percentage of total installation facility area, or percentage of total direct labor hours charged by the post engineer organization to each program element.

This amount of detail on utility service breakouts is useful for technical management up to the level of OCE. Above that level (e.g., DCSLOG, COA, OSD), summarizations of the major utilities services (e.g., total water service and total sewage service) would be provided. This is a preliminary judgment, however, and the data requirements of OCE and RPMAO will be determined more thoroughly during the system design phase.

EXHIBIT III-10 URR SUMMARY SHEET - INSTALLATION

Program Element	Priority	FC 9		FC 10		FC 11		FC 12		Total RPMA		
		Total $	$/ capita	Total $	$/ sq. ft.	Total $	% of FC 10	Total $	$/ sq. ft.	Total $	$/ capita	$/ sq.
Installation		XXX	XX	XXX	XX	XXX	XX	XXX	XX	XXX	XX	XX
23596 A	Total	XXX	XX	XXX	XX	XXX	XX	XXX	XX	XXX	XX	XX
	1	XXX	XX	XXX	XX	XXX	XX	XXX	XX	XXX	XX	XX
	2	XXX	XX	XXX	XX	XXX	XX	XXX	XX	XXX	XX	XX
	3	XXX	XX	XXX	XX	XXX	XX	XXX	XX	XXX	XX	XX
88096 A	Total	XXX	XX	XXX	XX	XXX	XX	XXX	XX	XXX	XX	XX
	1	XXX	XX	XXX	XX	XXX	XX	XXX	XX	XXX	XX	XX
	2	XXX	XX	XXX	XX	XXX	XX	XXX	XX	XXX	XX	XX
	3	XXX	XX	XXX	XX	XXX	XX	XXX	XX	XXX	XX	XX
91212 A	Total	XXX	XX	XXX	XX	XXX	XX	XXX	XX	XXX	XX	XX
	1	XXX	XX	XXX	XX	XXX	XX	XXX	XX	XXX	XX	XX
	2	XXX	XX	XXX	XX	XXX	XX	XXX	XX	XXX	XX	XX
	3	XXX	XX	XXX	XX	XXX	XX	XXX	XX	XXX	XX	XX

12		Total RPMA			Labor						Materials and Supplies	Equipment	Contracts	Other
					Military			Civilian						
$	$/ sq. ft.	Total $	$/ capita	$/ sq.ft.	Auth.	On Hand	$	Auth.	On Hand	$				
	XX	XXX	XX	XX	XX	XX	XXX	XXX	XXX	XXX	XXX	XXX	XXX	XXX
	XX	XXX	XX	XX			XXX			XXX	XXX	XXX	XXX	XXX
	XX	XXX	XX	XX			XXX			XXX	XXX	XXX	XXX	XXX
	XX	XXX	XX	XX			XXX			XXX	XXX	XXX	XXX	XXX
	XX	XXX	XX	XX			XXX			XXX	XXX	XXX	XXX	XXX
	XX	XXX	XX	XX			XXX			XXX	XXX	XXX	XXX	XXX
	XX	XXX	XX	XX			XXX			XXX	XXX	XXX	XXX	XXX
	XX	XXX	XX	XX			XXX			XXX	XXX	XXX	XXX	XXX
	XX	XXX	XX	XX			XXX			XXX	XXX	XXX	XXX	XXX
	XX	XXX	XX	XX			XXX			XXX	XXX	XXX	XXX	XXX
	XX	XXX	XX	XX			XXX			XXX	XXX	XXX	XXX	XXX
	XX	XXX	XX	XX			XXX			XXX	XXX	XXX	XXX	XXX

EXHIBIT III-11 URR FUNCTIONAL CATEGORY 9, OPERATION OF UTILITIES

Program Element	Utilities Services	Unit Measure	Target	
			Quantity	C
Instln. Total	Water Service, Total	M gallons	XXX	X
	Purchased Water	M gallons	XXX	X
	Filtered Water	M gallons	XXX	X
	Plant Operations	M gallons	XXX	X
	Pumping Operations	M gallons	XXX	X
	Unfiltered Water	M gallons	XXX	X
	Chemical Treatment	M gallons	XXX	X
	Pumping Operations	M gallons	XXX	X
	Sewage Service, Total			
	.			
	.			
	.			
	.			
	Electric Service, Total			
	.			
	.			
	.			
	.			
	Heating Service, Total			
	.			
	.			
	.			
	.			
	Air Conditioning Service, Total			
	.			
	.			
	.			
	.			
23596A	Water Service, Total			
	Sewage Service, Total			
	Electric Service, Total			
	Heating Service, Total			
	Air Conditioning Service, Total			
88096A	Water Service, Total			
	.			
	.			
	.			
	.			
91212A	Water Service, Total			
	.			
	.			
	.			
	.			

PRECEDING PAGE BLANK - NOT FILMED

ILITIES

re	Target		Cost Breakout				Per Capita Usage	Priority
	Quantity	Cost	Labor		Matl. and Supplies	Contracts		
			MH	$				
ıs	XXX	XXX	XX	XXX	XXX	XXX	XXX gpd	1
ıs	XXX	XXX				XXX	XX gpd	
ıs	XXX	XXX	XX	XXX	XXX		XX gpd	
ıs	XXX	XXX	XX	XXX	XXX			
ıs	XXX	XXX	XX	XXX	XXX			
ıs	XXX	XXX	XX	XXX	XXX		XX gpd	
ıs	XXX	XXX	XX	XXX	XXX			
ıs	XXX	XXX	XX	XXX	XXX			

b. Maintenance of Real Property

Subsection III.A.4 described in some detail the alternative procedures that are used to generate unconstrained maintenance and repair requirements. Subsection III.A.6 stated that these unconstrained requirements are continuously updated by adding input from the machinery for generating requirements and assigning work accomplished or to be accomplished to a particular year. Knowing the resources available in the CY and projected to be available in the BY, the post engineer estimates his requirements for the TY. Input to the URR for functional category 10 (maintenance of real property) is thus obtained from the reservoir of unconstrained requirements.

An important aspect of the URR for functional category 10 is that it gives high visibility to both the facility user and the facility maintainer. Exhibit III-12 contains a sample of the maintenance of real property portion of the URR. First, note that the vertical axis has a primary division that indicates users such as troops, administration, maintenance, storage, and supply, all in Program 2, General Purposes Forces. If an installation supports more than one FYDP program, this also will be shown. Next, note that the vertical axis aggregates common-use facilities, which are prorated among all using programs. Finally, note that the vertical axis aggregates utilities, which are common to all users.

While the vertical axis is designed primarily to give visibility to facility users, the horizontal axis is designed to give visibility to facility maintainers. Note that it shows facility components as well as resources required.

c. Minor Construction

That portion of the URR covering functional category 11 (minor construction) would be prepared by the engineering, plans, and real property office of the post engineer organization with input from the inspection teams. The minor construction portion of the URR would then be sent to the WCC for inclusion in the total and summary URR.

The minor construction portion of the URR serves to notify higher headquarters of future requirements in that area. No approval actions are implied by receipt of the URR at higher headquarters. The present approval system for minor construction projects, as outlined in AR 415-35 with use of the DD Form 1391 (Military Construction Line Item Data), would remain unchanged.

EXHIBIT III-12 URR - FUNCTIONAL CATEGORY 10, MAINTENANCE OF REAL PROPERTY

Fort Somewhere, Texas
Buildings

	Square Feet Occupied (000)	Number of Personnel Occupying	Exterior Painting	Interior Painting	Roofs	Floors	Building Shell	Heating Systems	Ventilation and Air Conditioning	Plumbing	Electrical	Other	Total	Labor	Materials	Contracts
Program 2 - General-Purpose Forces	X	X	X	X	X	X	X	X	X	X	X	X	X	X	X	X
Program Element - 23596A Base Operations - CONUS	X	X	X	X	X	X	X	X	X	X	X	X	X	X	X	X
Barracks (Total)																
Permanent	X	X	X	X	X	X	X	X	X	X	X	X	X	X	X	X
Bruckerized	X	X	X	X	X	X	X	X	X	X	X	X	X	X	X	X
Mobilization	X	X	X	X	X	X	X	X	X	X	X	X	X	X	X	X
Mess Halls (Total)																
Permanent	X	X	X	X	X	X	X	X	X	X	X	X	X	X	X	X
Semipermanent	X	X	X	X	X	X	X	X	X	X	X	X	X	X	X	X
Mobilization	X	X	X	X	X	X	X	X	X	X	X	X	X	X	X	X
Administration Buildings																
Permanent	X	X	X	X	X	X	X	X	X	X	X	X	X	X	X	X
Semipermanent	X	X	X	X	X	X	X	X	X	X	X	X	X	X	X	X
Mobilization	X	X	X	X	X	X	X	X	X	X	X	X	X	X	X	X

EXHIBIT III-12 (Continued)

Fort Somewhere, Texas
Buildings (con't)

	Square Feet Occupied (000)	Number of Personnel Occupying	Exterior Painting	Interior Painting	Roofs	Floors	Building Shell	Heating Systems	Ventilation and Air Conditioning	Plumbing	Electrical	Other	Total	Labor	Materials	Contracts
Maintenance Buildings																
Permanent	X	X	X	X	X	X	X	X	X	X	X	X	X	X	X	X
Semipermanent	X	X	X	X	X	X	X	X	X	X	X	X	X	X	X	X
Temporary	X	X	X	X	X	X	X	X	X	X	X	X	X	X	X	X
Storage and Supply Buildings																
Permanent	X	X	X	X	X	X	X	X	X	X	X	X	X	X	X	X
Semipermanent	X	X	X	X	X	X	X	X	X	X	X	X	X	X	X	X
Temporary	X	X	X	X	X	X	X	X	X	X	X	X	X	X	X	X
Total	X	X	X	X	X	X	X	X	X	X	X	X	O			
Labor	X	X	X	X	X	X	X	X	X	X	X	X	X	O		
Materials	X	X	X	X	X	X	X	X	X	X	X	X	X	X	O	
Contracts	X	X	X	X	X	X	X	X	X	X	X	X	X	X	X	O

EXHIBIT III-12 (Continued)

Fort Somewhere, Texas
Pavements and Grounds

	Length and Width	Capacity	Wearing Surface	Base	Shoulders	Drainage	Other	Total	Labor	Materials	Contracts
Program Element - 23596A (Cont.)											
Airfield Runways and Taxiways	X	X	X	X	X	X	X	X	X	X	X
Motor Parks	X	X	X	X	X	X	X	X	X	X	X
Firing Ranges and Tank Trails	X	X	X	X	X	X	X	X	X	X	X
Other Training Facilities	X	X	X	X	X	X	X	X	X	X	X
Improved Grounds	X	X	X	X	X	X	X	X	X	X	X
Unimproved Grounds and Maneuver Areas	X	X	X	X	X	X	X	X	X	X	X

EXHIBIT III-12 (Continued)

Fort Somewhere, Texas
Common Use Facilities

Common Use Facilities To Be Prorated Among Using Program Elements	Size	Capacity	Same Components	Total	Labor	Materials	Contracts
Administration Buildings	X	X	X	X	X	X	X
Warehouses	X	X	X	X	X	X	X
Post Spt. Facilities (chapel, commissary, theater, library, post office, PX, bank, service station, field house, gym, bowling, swimming pool, etc.)	X	X	X	X	X	X	X
Roads, Railroads, Bridges, Parking Areas	X	X	X	X	X	X	X
Improved Grounds (parade grounds and athletic fields/courts)	X	X	X	X	X	X	X
Unimproved Grounds	X	X	X	X	X	X	X
Program Element - 23599A	X	X	X	X	X	X	X
Family Housing - CONUS	X	X	X	X	X	X	X
Total	X	X	X	X	X	X	X
Labor	X	X	X	X	X	X	X
Materials	X	X	X	X	X	X	X
Contracts	X	X	X	X	X	X	X

EXHIBIT III-12 (Continued)

Fort Somewhere, Texas
Utilities

To Be Prorated Among Using Program Elements	Capacity	Machinery	Mains	Laterals	Other	Building Structure	Total	Labor	Materials	Contracts
Electricity										
Generating plants	X	X	X	X	X	X	X	X	X	X
Distribution and transmission lines	X	X	X	X	X	X	X	X	X	X
Heat										
Central heating plants	X	X	X	X	X	X	X	X	X	X
Distribution and transmission lines	X	X	X	X	X	X	X	X	X	X
Sewage										
Sewage treatment plants	X	X	X	X	X	X	X	X	X	X
Sewage pumping plants	X	X	X	X	X	X	X	X	X	X
Sewage collection systems	X	X	X	X	X	X	X	X	X	X
Water										
Water filtration and treatment plants	X	X	X	X	X	X	X	X	X	X
Water pumping plants	X	X	X	X	X	X	X	X	X	X
Water distribution mains and services	X	X	X	X	X	X	X	X	X	X

The extent of project description in the preparation of the minor construction portion of the URR could depend on the level of approval for the projects. AR 415-35 gives the Operating Agency Commander (OAC) approval authority for all OMA minor construction projects. The OAC may delegate all of his approval authority to subordinate commanders, including installation commanders, with the provision that installation commanders may not approve projects costing in excess of $10,000.

The URR prepared at the installation therefore would list minor construction projects greater than $10,000 and give lump-sum totals for all projects less than or equal to $10,000. This is an arbitrary cutoff, but it seems clear that some summarizing is desirable. The cutoff could be lowered to $5,000, for example, if more visibility of individual projects was desired. An illustrative form of the URR for minor construction is shown in Exhibit III-13. The projects or totals would be grouped by program element, priority, and work method, whether in-house or contract. For each entry, the approval headquarters and the funded, unfunded, and total costs would be given, as well as a cost breakout for in-house projects by labor, materials, and supplies.

OMA minor construction would be grouped into three priorities:

- Priority one would include the most important minor construction projects to be performed by in-house forces as part of their basic workload, as well as any contract projects believed to be most essential and most difficult to delay.
- Priority two would include those projects which are important and should not be delayed, but are not so essential as those in priority one.[1]
- Priority three would include those projects that are less important than those in priorities one and two.[2]

---

[1] As an arbitrary guideline we might say that the total dollar volume of minor construction projects in both priorities one and two would be less than the present HQ DA objective of 15 percent of functional category 10.

[2] We may also arbitrarily state that priority three would contain those projects which would cause the total minor construction requirements to exceed the 15-percent objective mentioned in footnote 1 above.

d. Other Engineering Support

Input to the URR for functional category 12 (other engineering support) would be prepared in the appropriate sections of the post engineer organization and forwarded through their division offices to the WCC. These would include the preventive maintenance and custodial section, entomology section, pavement section (snow removal and ice alleviation), refuse collection and disposal section, and the fire prevention and protection division, each preparing its respective portion of the URR. Inputs for the remaining activities, management and engineering-active facilities, engineering support-inactive facilities, and miscellaneous engineer activities, would be prepared by the engineering, plans, and real property office.

Referring to Exhibit III-14, for each service or support function, the following data elements would be collected, where applicable: a factor or unit of measure such as number of military and civilian personnel assigned to the fire prevention and protection activity, or square feet in thousands for custodial services; the estimated quantity; a unit cost and total cost of requirements broken out into in-house and contracts, with the in-house cost further broken into labor, materials and supplies, and equipment to permit preparation of the URR Summary Sheet. All support service totals would be prorated by program element, as shown in Exhibit III-14. Most support services would be treated as priority number one. However, some support services, such as parts of miscellaneous engineer activities, may fall into other priority categories.

e. Echelons Above Installation

The URR, with its summary sheet and backup sheets for each functional category, would be forwarded to the MSC for its consideration. The MSC, with its overview of Army area activities and its access to information that may not have reached installation, would exercise its managerial prerogative of reconsidering the unconstrained requirements. Generally, it would review the work of the installation for correctness of application of standards and basis for workload computations and recognition of recent mission changes. Technical experts

EXHIBIT III-13 URR FUNCTIONAL CATEGORY 11, MINOR CONSTRUCTION

Program Element	Project Description	Priority	Work Method (in-house, contract)	Approval HQ (Instl., Maj. Sub. Cmd.)	Lab Man-Hours
23596A	Lump Sum Total	1	In-House	Instl.	XXX
	Modify Admin. Bldg. # 177		In-House	MSC	XXX
	Alter Heating System, Bldg. # 82		Contract	MSC	-
	.				
	.		In-House	MSC	XXX
	.				
	Lump Sum Total	2	In-House	Instl.	XXX
	Lump Sum Total		Contract	Instl.	-
	Modify Mess Hall # 547		In-House	MSC	XXX
	.				
	.		In-House	MSC	XXX
	.				
	Lump Sum Total	3	In-House	Instl.	XXX
	Lump Sum Total		Contract	Instl.	-
	Modify Exhaust System, # 1173		Contract	MSC	-
	.				
	.				
88096A	Lump Sum Total	1	In-House	Instl.	XXX
	.				
	.				
	.				
	.				
	.				
	.				
91212A	Lump Sum Total	1			
	.				
	.				
	.				
	.				
	.				
	.				

ON

pproval HQ stl., Maj. ub. Cmd.)	Labor		Materials and Supplies	Funded Cost	Unfunded Cost	Total Cost
	Man-Hours	$				
Instl.	XXX	XXX	XXX	XXX	XX	XXX
MSC	XXX	XXX	XXX	XXX	-	XXX
MSC	-	-	-	XXX	-	XXX
MSC	XXX	XXX	XXX	XXX	XX	XXX
Instl.	XXX	XXX	XXX	XXX	XX	XXX
Instl.	-	-	-	XXX	-	XXX
MSC	XXX	XXX	XXX	XXX	-	XXX
MSC	XXX	XXX	XXX	XXX	XX	XXX
Instl.	XXX	XXX	XXX	XXX	XX	XXX
Instl.	-	-	-	XXX	-	XXX
MSC	-	-	-	XXX	-	XXX
Instl.	XXX	XXX	XXX	XXX	XX	XXX

EXHIBIT III-14 URR FUNCTIONAL CATEGORY 12, OTHER ENGINEERING SUPPORT

Program Element	Service or Support Function	Work Method	Factor	Quantity	Unit Cos
Instl. Total	Fire Prevention and Protection				
	Supervision	In-House	Mil. Pers.	XXX	XX
			Civ. Pers.	XXX	XX
	Firefighting	In-House	Mil. Pers.	XXX	XX
			Civ. Pers.	XXX	XX
	Fire Prevention	In-House	Mil. Pers.	XXX	XX
			Civ. Pers.	XXX	XX
		Contract			
	Custodial Services	In-House	M sq. ft.	XXX	XX
			M sq. ft./ capita	XXX	
		Contract	M sq. ft.	XXX	XX
			M sq. ft./ capita		
	Entomology Services	In-House	M sq. ft.	XXX	XX
		Contract	M sq. ft.		
	Refuse Handling		M cu. yds.	XXX	XX
	Refuse Collection	In-House	M cu. yds.	XXX	XX
		Contract	M cu. yds.	XXX	XX
	Refuse Disposal	In-House	M cu. yds.	XXX	XX
		Contract	M cu. yds.	XXX	XX
	Snow Removal and Ice Alleviation	In-House			
		Contract			
	Other				
	Mgt. and Engr. - Active Facilities	-	% of RPMA	XXX	
	Engr. Supt. - Inactive Facilities	-			
	Miscellaneous Engr. Activities	-			
23596A	Fire Prevention and Protection	-	Mil. Pers.		
			Civ. Pers.		
	Custodial Services	-	M sq. ft.		
	Entomology Services				
	Refuse Handling				
	.				
	.				
	.				

PRECEDING PAGE BLANK - NOT FILMED

Quantity	Unit Cost	Total Cost	Labor		Materials and Supplies	Equipment	Priority
			Man-Hours	$			
		XXX	XX	XX	XXX	XXX	1
XXX	XX	XXX	XX	XX			1
XXX	XX	XXX	XX	XX			1
XXX	XX	XXX	XX	XX	XXX	XXX	1
XXX	XX	XXX	XX	XX	XXX	XXX	1
XXX	XX	XXX	XX	XX	XXX	XXX	1
XXX	XX	XXX	XX	XX	XXX	XXX	1
		XXX					1
XXX	XX	XXX	XX	XX	XXX	XXX	1
XXX							
XXX	XX	XXX					1
XXX	XX	XXX	XX	XX	XXX	XXX	1
							1
XXX	XX	XXX	XX	XX	XXX	XXX	1
XXX	XX	XXX	XX	XX	XXX	XXX	1
XXX	XX	XXX					1
XXX	XX	XXX	XX	XX	XXX	XXX	1
XXX	XX	XXX					1
		XXX	XX	XX	XXX	XXX	1
		XXX					1
		XXX	XX	XX	XXX	XXX	1
XXX		XXX	XX	XX			1
		XXX	XX	XX			1
		XXX	XX	XX	XXX	XXX	1
							2
							3

at the MSC would examine the URR's from each installation for validity and accuracy of estimates, as well as the possible reordering of priorities. Program element directors represented at the MSC, with their knowledge of possible changes in missions, would add or delete affected items and recompute workloads; and with their knowledge of the relative importance of their missions among installations, they would examine the URR's for possible reordering of priorities. The MSC would make its amendments in consultation with installations and consolidate the URR's for the entire subordinate command.

The URR summary sheets for each installation would be consolidated by program element into a single URR summary sheet. The backup sheets for each functional category would be similarly consolidated with the following exception: For functional category 11, the URR leaving MSC would include only lump-sum totals of minor construction projects. No individual projects would be listed since the major subordinate commander has approval authority for all OMA minor construction projects in excess of $10,000.

From the MSC, the URR would be forwarded to the MAFC, where it would be examined, reconsidered, verified, modified, would have priorities reordered, and would be consolidated for all MSC's.

At OCE, the URR would be accorded similar treatment and consolidated Army-wide. The detailed backup sheets for each functional category would be condensed since it does not appear at this stage of systems analysis that the amount of detail in the URR would be required above OCE. For functional category 9, as illustrated in Exhibit III-11, only totals of the major utility services (e.g., total water service) would be necessary. For functional category 10, totals for each group of similar facilities would be sufficient, eliminating data by building component. Functional category 11 would remain unchanged, with projects listed by lump-sum totals. For functional category 12, illustrated in Exhibit III-14, only totals of the support services (e.g., total refuse handling service) would be necessary.

The URR summary sheet and condensed backup sheets would be forwarded to RPMAO in DCSLOG, while the detailed backup for each

functional category would remain at OCE. The RPMAO would then have the information necessary to support the RPMA requirements of each program element director.

The preceding section has dealt primarily with the URR. This report was treated in some detail because it introduced several key aspects of the proposed new RPMA system concept. The other four RPMA management reports that support the budget cycle follow the same philosophy as the URR and are treated in the following subsections.

2. Financed/Unfinanced Requirements Report

The January PBG leaves HQ DA about 6 months before the year of execution and provides guidance for the preparation of the COB. The post engineer organization would update the previously prepared URR in preparing its input to the COB. With the elapse of 11 months from the preparation of the URR and changes in circumstances, missions, budgets, and guidance from higher headquarters, revisions to the URR would be necessary. A condensation of the updated URR, divided into financed/unfinanced portions and accompanied by a narrative impact statement, would be known as the financed/unfinanced requirements report. This would rise through the RPMA functional management channel to OCE and DCSLOG to provide more detailed backup to the COB and support for the apportionment review in determining the AOB just prior to the start of the year of execution.

The FURR (Exhibit III-15) would include a description of RPMA activities by program element and functional category, broken into financed/unfinanced portions. For each entry under a functional category, priority, work method (in-house or contract), and cost would be given.

Under functional category 9 (operation of utilities), there would be entries for total water service, total sewage service, total electric service, total heating service, and total air conditioning service. Under functional category 10 (maintenance of real property), the entries would be the list of facility types, as identified in the discussion of the URR, and an entry for equipment. Under functional category 11 (minor construction),

EXHIBIT III-15 FINANCED/UNFINANCED REQUIREMENTS REPORT (FURR)

Program Element	Funct. Category	Description	Priority	Work Method	Cost
23596 A		Financed			XXXX
	9	Water Service, Total	1	In-House	XXX
			1	Contract	XX
		Sewage Service, Total	1	In-House	XXX
			1	Contract	XX
		.			
		.			
		.			
	10	Permanent Barracks	1	In-House	XX
			2	In-House	XX
			2	Contract	XX
		Bruckerized Barracks	1	In-House	XX
		.			
		.			
		.			
		Equipment Acquisition	1	-	XXX
			2	-	XX
	11	Minor Construction Projects	1	In-House	XXX
			1	Contract	XXX
			2	In-House	XXX
		.			
		.			
		.			
	12	Fire Prevention	1	In-House	XXX
			1	Contract	XXX
		.			
		.			
		.			
		Unfinanced			XXX
	10	Permanent Barracks	2	Contract	XX
			3	Contract	XX
		.			
		.			
		.			
		Equipment Acquisition	2	-	XX
			3	-	XX
		.			
		.			
		.			
	11	Minor Construction Projects	2	Contract	XX
			3	Contract	XX
		.			
		.			
		.			
88096A		Financed			XXXX
	9	Water Service, Total			XXX
		.			
		.			
		.			

the entries would be the lump-sum totals of projects. Under functional category 12 (other engineering support), the entries would include the major support services, such as (1) fire prevention and protection and (2) management and engineering--active facilities.

Actions taken on the FURR as it moves through RPMA management channels from installation to HQ DA are similar to those previously described under the URR; that is, the report would be examined, reconsidered, verified, modified, have priorities reordered, and be consolidated at each successively higher level through OCE.

3. Summary Annual Work Plan

At the present time, preparation of the currently constituted AWP begins after receipt of the January PBG as a plan of all work the post engineer expects to perform during the coming year of execution. A corrected version is prepared and divided into financed and unfinanced portions after receipt of the AOB at the start of the year of execution.

The proposed RPMA management system envisages a stronger role for a reconstituted annual work plan since detailed specifications of requirements exist in the form of the URR, its backup sheets, and in the case of functional category 10, the feeder forms from the shops. The URR and FURR would form the basis for the reconstituted AWP, although in the AWP, the emphasis and display would shift from requirements by organizational units--divisions, branches, and shops--to permit the use of the document as an internal work management tool. The reconstituted AWP would be made more useful as an internal management tool for the post engineer by the existence of cost estimates broken down into labor (man-hours and dollars), materials and supplies, equipment, and contracts, which can be related to shops by the updated URR, its backup sheets, and feeder forms.

The AWP itself would remain at the installation level, but another document--the SAWP--would be sent through RPMA management channels to OCE. The SAWP would be comparable in detail and form to the URR and, like the corrected AWP, would be prepared once the AOB is known--at the start of the year of execution.

The SAWP would be the second of three major reports for facility management from the installation level through HQ DA, the first and third being the URR and PYPR, respectively. Briefly, the first would present unconstrained requirements well in advance of the year of execution, the second would arrange these requirements into financed and unfinanced requirements to bring them in accord with the AOB at the start of the year of execution, while the third would report performance with available resources. These reports would close the management cycle by providing (1) what is needed, (2) what is planned with the resources expected, and (3) what was accomplished with the resources received.

In general terms, the SAWP would continue the practice of identifying RPMA activities by user (both program element and command) and by priority. There would be separate sheets for each functional category with a summary sheet similar to that of the URR. Maintenance of real property would include: the type of facility and building component; type of work; and costs, broken down into labor, materials and supplies, contracts, and equipment. Minor construction would include: project description following the guidance on listing projects or lump-sum totals suggested in the previous discussion on minor construction; approval authority; work method, whether in-house or contract; and costs, broken down into labor, materials and supplies, funded and unfunded costs, and total cost. The portion of the SAWP covering other engineering services would include: the service or support function; factor or unit of measure; quantity; and costs, broken out into labor, materials and supplies, contracts, equipment, unit cost, and total cost.

4. Midyear Review Report

The midyear review originates at the installation level in the form of the BER--approximately 4 months after the year of execution has begun. Such a review is held to assist and influence reprogramming decisions caused by changes in missions and circumstances since publication of the AOB. In preparing its input to the BER, the post engineer organization would update the SAWP to provide a support document for the BER. The document would be known as the midyear review

report and could be identical in format to the FURR (Exhibit III-15), which provides backup to the COB. Since performance and expense data for the first 4 months of the year of execution are reported in the BER, only a revised breakout of RPMA activities into financed and unfinanced portions would be included in the MYRR. The MYRR would include an impact statement to present the post engineer's case and would rise through RPMA management channels to HQ DA.

5. Prior-Year Performance Report

Following the year of execution, prior-year reports close the PPBER cycle, permitting comparison between actual performance and expected performance. The two will differ due to changes in circumstances, missions, budget guidance, and uncertainties in estimates. The PYPR would follow the format of the other RPMA facilities management reports--the URR and SAWP in particular--with a summary sheet and backup sheets for each functional category. The summary sheet for the PYPR would be identical to that of the URR (Exhibit III-10). Data collected by the post engineer organization during work execution would include program element; priority; building component, where appropriate; and cost breakout by labor, materials and supplies, equipment, and contracts, so that comparisons could be made with requirements as expressed in the URR and with the execution plan as expressed in the SAWP. The PYPR would include data presently contained in the TDR and the CAUO Report, as well as other comparative data, so that the TDR and CAUO Report could be replaced by a single PYPR. The PYPR would continue the Narrative Review presently found in the CAUO so that explanatory comments could be sent forward.

An impact statement accompanying the PYPR would play a valuable role in letting program directors, manpower directors, and technical management at higher headquarters know the effects of their decisions. Significant impacts on the accomplishment or lack of accomplishment of the user's missions, such as utility stoppages or unfunded projects whose cause could be related in part to shortages of funds or manpower, would be reported.

For functional category 9 (operation of utilities), the utility services breakout would be identical to that in the URR. Using water service as an example again (see Exhibit III-16), let us look at the data that would be presented, where applicable, for each entry of a utility service:

- A factor or unit of measure, such as gallons in thousands for water service
- Corrected target quantities, as developed in TB Eng 259, to reflect actual conditions during the FY, and the actual quantities consumed or expended
- Costs, broken down into labor, supplies, funded contracts, the corrected target cost, and the actual cost
- Sales of the service, divided into quantity of service sold and the reimbursed cost
- Per capita usage as a corrected target and actual usage
- Performance, composed of a unit of measure such as dollars per thousand gallons, the standard cost per unit of measure, and the actual unit cost, where such standard costs would be meaningful

To permit program element directors and technical managers at all echelons to make comparisons with unconstrained requirements and financed/unfinanced requirements as set forth in the SAWP, the major utility services would be prorated among program elements represented at the installation.

For functional category 10 (maintenance of real property), again the format would be the same as that in the URR. It provides primary visibility to facility users by breaking the vertical axis out by FYDP program or program element supported. It uses standardized groups of similar facilities, as discussed in subsection III.A.7, to permit aggregation and comparison by higher echelons. The visibility afforded to using program and program element directors by the display of results of functional category 10 operations permits them to make rational budgetary decisions on amounts to be programmed for their facilities.

The display also provides visibility to the post engineer functional branches and divisions at the installation level and above. It does this by breaking the horizontal axis out by facility component as well as by labor, materials, and contracts. By comparing the completed display to the earlier URR and SAWP for the same year, engineer functional management should be able to improve the efficiency of its operations.

That portion of the PYPR covering functional category 11 (minor construction) would be similar to that same portion of the URR, following the general format and rules discussed previously for listing projects or lump-sum totals. The report, shown in illustrative form in Exhibit III-17, would include projects or totals grouped by program element, priority and work method, and whether in-house or contract. For each entry, there would be given the approval headquarters; a cost breakout by labor, material and supplies, and equipment; the approved cost; and the actual cost divided into funded, unfunded, and total.

Recognizing the need by OSD for the semiannual Special Projects Report (DA Form 2867) as outlined in AR 420-21 and DODI 4270.24, the report would continue and would be accommodated by the IFS. Since the report calls for only lump-sum totals of the OMA minor construction projects, its effect on the RPMA management system is not great.

Functional category 12 (other engineering support) would be treated similarly to operation of utilities and would agree with the URR and SAWP. The format of the functional category 12 portion of the PYPR would be identical to that of the URR (Exhibit III-14). For each service or support function, the following data would be collected:

- A factor or unit of measure
- The quantity involved
- The actual unit cost and total cost, broken into labor, material and supplies, and contracts

Again, the support services would be prorated by program elements.

The RPMA functional concept described in this section has been illustrated with a number of examples. Although the examples were based on RPMA activities at a Class I installation funded from OMA sources, the principles illustrated apply across the board, regardless of installation or funding source.

EXHIBIT III-16 PYPR - FUNCTIONAL CATEGORY 9, OPERATION OF UTILITIES

Program Element	Utilities Services	Unit Measure	Quantity		C			
			Corrected Target	Actual	Labor		Matls. and Supplies	E Co
					MH	$		
Instlr. Total	Water Service, Total	M gallons	XXX	XXX	XXX	XXX	XXX	
	Purchased Water	M gallons	XXX	XXX				
	Filtered Water	M gallons	XXX	XXX	XX	XX	XX	
	Plant Operations	M gallons	XXX	XXX	XX	XX	XX	
	Pumping Operations	M gallons	XXX	XXX	XX	XX	XX	
	Unfiltered Water	M gallons	XXX	XXX	XX	XX	XX	
	Chemical Treatment	M gallons	XXX	XXX	XX	XX	XX	
	Pumping Operations	M gallons	XXX	XXX	XX	XX	XX	
	Sewage Service, Total							
	.							
	.							
	.							
	.							
	.							
	Electric Service, Total							
	.							
	.							
	.							
	.							
	.							
	Heating Service, Total							
	.							
	.							
	.							
	.							
	.							
	Air Conditioning Service, Total							
	.							
	.							
	.							
	.							
	.							
23596A	Water Service, Total							
	Sewage Service, Total							
	Electric Service, Total							
	Heating Service, Total							
	Air Conditioning Service, Total							
88096A	Water Service, Total							
	.							
	.							
	.							
	.							
91212A	Water Service, Total							
	.							
	.							
	.							
	.							

Costs ($)						Sales		Per Capita Usage		Performance		
Labor		Matls. and Supplies	Funded Contracts	Corr. Target	Total	Quantity	Reim. Costs	Corr. Target	Actual	U/M	Std.	Actual
H	$											
X	XXX	XXX	XXX	XXX	XXX	XX M gal	XX	XXX	XXX			
			XXX	XX	XX			XX	XX			
X	XX	XX		XX	XX	XX	XX	XX	XX	$/Mg	XX	XX
X	XX	XX		XX	XX							
X	XX	XX		XX	XX							
X	XX	XX	XX	XX	XX	XX	XX	XX	XX	$/Mg	XX	XX
X	XX	XX	XX	XX	XX							
X	XX	XX		XX	XX							

EXHIBIT III-17 PYPR - FUNCTIONAL CATEGORY 11, MINOR CONSTRUCTION

Program Element	Project Description	Priority	Work Method	Approval HQ	Ma
23596A	Lump Sum Total	1	In-House	Instl.	
	Modify Admin. Bldg. #177		In-House	MSC	
			Contract	MSC	
	.		In-House	MSC	
	.				
	.				
	Lump Sum Total	2	In-House	Instl.	
	Lump Sum Total		Contract	Instl.	
	Modify Mess Hall #547		In-House	MSC	
	.		In-House	MSC	
	.				
	.				
	Lump Sum Total	3	In-House	Instl.	
	Lump Sum Total		Contract	Instl.	
	.		Contract	MSC	
	.				
	.				
88096A	Lump Sum Total	1	In-House	Instl.	
	.				
	.				
	.				
	.				
	.				
	.				
91212A	Lump Sum Total	1			
	.				
	.				
	.				
	.				
	.				
	.				

PRECEDING PAGE BLANK-NOT FILMED

TION

Work Method	Approval HQ	Labor		Materials and Supplies	Approved Cost	Actual Costs		
		Man-Hours	$			Funded	Unfunded	Total
-House	Instl.	XXX	XXX	XXX	XXX	XXX	XX	XXX
-House	MSC	XXX	XXX	XXX	XXX	XXX	-	XXX
ntract	MSC	-	-	-	XXX	XXX	-	XXX
-House	MSC	XXX	XXX	XXX	XXX	XXX	XX	XXX
-House	Instl.	XXX	XXX	XXX	XXX	XXX	XX	XXX
ntract	Instl.	-	-	-	XXX	XXX	-	XXX
-House	MSC	XXX	XXX	XXX	XXX	XXX	-	XXX
-House	MSC	XXX	XXX	XXX	XXX	XXX	XX	XXX
-House	Instl.	XXX	XXX	XXX	XXX	XXX	XX	XXX
ntract	Instl.	-	-	-	XXX	XXX	-	XXX
ntract	MSC	-	-	-	XXX	XXX	-	XXX
-House	Instl.	XXX	XXX	XXX	XXX	XXX	XX	XXX

PRECEDING PAGE BLANK - NOT FILMED

Finally, it is reiterated that the examples shown illustrate only partial, sample results. Complete results will be produced during Phase IIB as a part of system design.

IV. RPMA FINANCIAL MANAGEMENT

A. Financial Requirements Development During the Planning Phase

Section II presented a technique for influencing the content of OSD annual logistics guidance during the planning phase. This portion of the analysis addresses the development of financial requirements for RPMA during that period and, in the next subsection, reviews the financial aspects of RPMA in the programming, budgeting, and review phases.

The development, during the planning phase, of an estimate of the financial requirements of RPMA for the TY will involve a cost analysis of the estimated RPMA workloads computed as described in Section II. Specific cost analysis techniques will be comparable to those currently in use for estimating the costs of midrange plans at HQ DA. The estimating will take advantage of data from unconstrained requirements reports from field commands, particularly where continuing annual level-of-effort costs can be identified. Because RPMA is financed by a number of appropriations, the cost estimates must identify the amounts associated with each appropriation and where practicable with each of the FYDP programs that they support.

B. Financial Aspects of Programming and Budgeting in the Formulation Phase

1. Problem Areas

The problems of identity and visibility of RPMA in the present OMA data structure (AMS) were attributed to the submemo[1] role that RPMA financial requirements play in that structure. These problems were also evident, to a lesser degree, in the non-OMA appropriations, e.g., research, development, test, and evaluation (RDTE), PEMA, etc.

---

[1] PRC R-1209, Real Property Maintenance Activities Management Function Analysis, Volume II, Part 1, June 1969 (hereafter referred to as Volume II, Part 1) pp. III-3 through III-5.

2. Impact of Extension of FYDP-Based Management Structure to Installation Level

Among the approach tasks suggested for further analysis, a number of options that could raise the level of importance of RPMA in the OMA budget process were offered and discussed.[1] These options, which were related to the present budget-program-based AMS code structure, varied in approach from that of establishing a separate appropriation account for RPMA, to that of identifying a segment of a Budget Project Account (BPA) with RPMA (e.g., 2109.9050). A recent decision by the Army to move to an FYDP-based management structure has lessened the need for further analysis of this problem because the FYDP structure will provide the desired greater measure of visibility of RPMA. This decision extends, as of 1 July 1970, the FYDP-based management structure down to the installation level to ensure conformation with the resources management system Project PRIME. Use of the FYDP code structure (e.g., Base Operations Program Element 23596A) for management of OMA resources will alter to some degree the programming and budgeting system (AMS; e.g., BP 2000) presently in use. This follows earlier Army efforts to improve the interface between the AMS and the FYDP. Some of the problem areas between these two structures were described in Volume II, Part I, subsection III.C. Although the Army's continued use of AMS in lieu of the program element structure has resulted in criticism by OSD for generating unnecessary workload at all levels, it should be noted that the work that the Army has done in improving the interface between AMS and the FYDP code structure will still be of value when preparing data for the President's budget or congressional hearings.

[1] Volume II, Part I.

a. Project PRIME

To place into proper perspective the impact of the implementation of the FYDP code structure on RPMA in the OMA area, it is necessary to digress at this point to describe those aspects of Project PRIME--the system for management of resources for operating units--that apply to this analysis.

Project PRIME is one of a number of improvements in resource management initiated by DOD to bring about a revision of the programming system, budgeting system, and the management accounting system so that they will be more useful to managers at all echelons of command. The programs in the FYDP provide the basis on which the entire system is structured.

One of the basic concepts of Project PRIME is to develop costs on an accrual basis. As congressional authorization of funds by appropriation is still on an obligation basis, FYDP accounting procedures established by OSD state that obligation control will be exercised at the FYDP program level to avoid overobligation of limitations established by funding agencies. DOD Instruction 7220.22 states that "the accounting records will provide the information needed by the component headquarters to control obligations in the OMA appropriation."

The initial shift to Project PRIME procedures, after a period of field testing, occurred on 1 July 1968, when Army accounting procedures in the OMA appropriations area and the Military Personnel, Army (MPA) costs associated with it were converted from an obligation accounting basis to an accrual accounting basis (expense) down to the installation level. This type of accounting should prove useful in the RPMA area as accrual accounting offers a means of relating resources consumed to work done, which then can be compared to work planned. Such data are not readily available in the present system. Project PRIME is a system that is principally for financial management: however, financial data alone are insufficient for adequate management of RPMA, and the IFS introduces a means by which data structured to reflect RPMA performance (in dollar terms and otherwise) can complement

the financial data available from Project PRIME. The implementation of Project PRIME should also prove useful in providing a system with which IFS can more readily interface, particularly in its ability to provide timely data related to mission or accomplishment, further related to program, as opposed to the present system, which is expressed in terms of resources (inputs).

Section II presented and discussed an outline of the concept for the RPMA system design. Implementation of this proposed system and the forthcoming shift to the FYDP code structure should provide better identity and visibility of RPMA in the OMA budget process for correlation with programs and program elements. Using data identified with a specific program element such as base operations, RPMA managers, with facility management data available from IFS, will be able to provide program directors and other resource managers with a more accurate description of the RPMA support given to, or required for, their program/mission. This, in turn, should also lead to better visibility, for relating RPMA support to mission will make program directors more aware of their requirements in this area.

Instructions for implementation of the FYDP-based management structure within the OMA portion of the Army budget system are presently under preparation by the Office of the Comptroller of the Army (OCA). These instructions, together with the proposed structure, are tentatively scheduled for release to the field on or about 1 November 1969. At this writing, no specifics have been established for the reporting of financial data in FYDP terms of Project PRIME. There is only one DA document presently available on Project PRIME.[1] This document does outline in detail accounting procedures and some reporting requirements of financial data. PRC anticipates that requirements

[1] DA Pamphlet 37-6, Accounting and Reporting Procedures Manual for Project PRIME Under Resource Management Systems, January 1969.

for financial data such as the COB under the FYDP-based management structure will be similar to the present system. Report formats, however, will differ in terms of code structure.

3. Assumptions as Basis for Concept for Financial Management

This analysis of RPMA financial management, using the FYDP structure, has been written on the basis of interpretation of data presently available. Therefore, the concepts and thoughts expressed may differ somewhat from those subsequently published by the Army. Following are some assumptions on which this analysis is based:

- The former budget-program-based AMS for OMA will be replaced by an FYDP-based management structure
- The budget-program-based AMS will continue to be used to develop data for the President's budget and congressional hearings
- Financial-data-reporting from the field in the OMA portion of the Army budget system, under Project PRIME, will be by FYDP program, modified program element, functional category, and element of expense
- Any system design for improved RPMA management will be compatible with, and will interface with, Project PRIME reporting requirements

4. RPMA in the Budget Formulation Process

It is anticipated that the forthcoming change by the Army to an FYDP-based management structure in the OMA appropriation area will result in only minor changes in the present budget system

for OMA. As a new AMS code structure will be introduced, let us review the Army budget process for OMA within the context of the new FYDP-based management structure so far as it concerns RPMA financial management and its anticipated interface with the RPMA functional management channel discussed in Section III.

When establishing the new code structure for the FYDP-based management structure, the Army took a large step in developing a better translation necessary between the budget-program-based management structure and the FYDP code structure. For example, in the FYDP code structure, Base Operations, Europe, in Program 2 is 23196A. In the new AMS code structure, this will appear as 203196, the first digit indicating the FYDP program, the second digit the former budget program (BP 2000), and the last four digits coupled with the first digit, the program element. The translation problem has been improved two ways:

- The Army code structure will now be in the same terms as the FYDP code structure, thereby providing a common code structure and resolving any further difficulties with OSD in this area.
- A direction translation from RMS to AMS for preparation of the Army portion of the President's budget and congressional hearings will be provided from the RMS codes in use; for example, Modified Program Element 81XXXX would indicate that this RMS program element would be accumulated against budget program 2100.

In the OMA budget process itself, a number of actions occur in each budget cycle: (1) preparation of PBG and CBE; (2) preparation of the budget estimate and associated actions at HQ DA; (3) COB actions; (4) preparation of the approved budget; and (5) execution, review, and performance actions (BER, PYR).

a. Preparation of PBG and CBE

How will the new AMS and the RPMA functional management channel of IFS affect the present financial management channel and the actions associated with it? As discussed in Volume II, Part 1, PBG is distributed four times each year (June, October, January, and February). All PBG is similar in format and preparation and is the vehicle whereby the Army Chief of Staff, issues guidance and HQ DA exercises financial management of the Army budget. Volume II, Part 1 of this analysis showed the type of data moving through the Comptroller's financial channel and revealed that considerable non-financial data was traveling in that channel for lack of other means being available. Annex IV to Volume I of the PBG specifically addresses base operations for all commands and agencies. Exhibit IV-1 shows the format in which dollar guidance for program levels in base operations is set forth. Note in the example that no correlation exists between the figures carried against BPA's to the right of the total and the 9000 accounts carried to the left. Therefore, while the MAFC's can use the guidance in the BPA figures, little or no value can be gathered from the 9000 account figures.

To illustrate what is meant by the above comments, while $218 million is shown against the United States Continental Army Command (USCONARC) for 2009 base operations, it is not possible to determine the amount of that $218 million of 2009 money to the various 9000 accounts shown to the left. The 9000 accounts summarize all 2X09 money in each account (i.e., 9050 reflects a total of all 9050 money in 2009, 2109, 2209, 2309, and 2609). In moving to a new code structure, it is proposed that the Army revise this guidance document to provide data with a direct correlation between base operations and the functional categories contained therein. Exhibit IV-2 offers a new format for providing these data to the MAFC's and portrays how this dollar guidance may appear in future years when structured in FYDP code structure terms.

One area in the PBG in which considerable change should take place is in the narrative guidance for RPMA, contained in Annex IV, Volume I. This narrative guidance (an example is shown in Exhibit IV-3) varies with the PBG and addresses each of the functional categories of RPMA. As can be seen from Exhibit IV-3, the RPMA guidance contained in the PBG is directly related to RPMA management and has little or no correlation to financial management. This type of RPMA guidance has appeared on a continuing basis in the PBG, with updating occurring when necessary. It becomes fairly obvious in reviewing RPMA guidance contained in the PBG that such functional guidance should be removed to free this program and budget document of unnecessary data. With the establishment of IFS and the strengthened functional management channel for RPMA, it is proposed that all RPMA narrative guidance not required by the Comptroller for financial management be removed from the PBG. The analysis of this narrative guidance indicates that most, if not all, of this guidance can be set forth in an RPMA guidance document, updated periodically and distributed to the field through the functional management channel. RPMA guidance required on an ad hoc basis could be issued as required through either or both management channels, depending on content.

In regard to RPMA and the CBE, one important change will occur in preparing the staff-developed budget estimate when IFS and the RPMA functional management channel become operational. In the past, no definitive picture of RPMA requirements from the field other than that contained in the COB, has been available at the MAFC for inclusion in the comments for the CBE. With the introduction of the URR in the RPMA functional management channel, which was described in Section III, a means will become available to provide timely data to the RPMAO/OCE. This report and the FURR will be used to provide data to the program directors and to influence the level of RPMA support for their programs. Exhibit IV-4 portrays the flow of these data. The staff-developed budget estimate now begins with the

EXHIBIT IV-1 DOLLAR GUIDANCE FOR RPMA IN PBG

Cmd./FY	9010	9020	9030	9040	9050	9060	9070	9080	9090	Total	200
USCONARC											
Jan. PBG (FY__)	30	71	12	63	25	49	6	25	70	351	21
-	XX	XX	XX	XX	XX	XX	X	XX	XX	XXX	XX
-											
-											
- -											
USAREUR											
-	XX	XX	XX	XX	XX	XX	XX	XX	XX	XXX	XX
-											
-											
-											
-											
USARPAC	XX	XX	XX	XX	XX	XX	XX	XX	XX	XXX	
-											
USAMC	XX	XX	XX	XX	XX	XX	XX	XX	XX	XXX	
-											
USARSO	XX	XX	XX	XX	XX	XX	XX	XX	XX	XX	
-											
XXXX											

Volume I - All Commands and Agencies
Annex IV - Base Operations
Table 4 - FY__ + FY__ Program Levels
Direct Obligations - $Millions

9070	9080	9090	Total	2009	2109	2209	2309	2409	2509	2609	2709	2809
6	25	70	351	218	117	2			5	9		
X	XX	XX	XXX	XXX	XXX	X			X	X		
XX	XX	XX	XXX	XXX		X	X		X			
XX	XX	XX	XXX			XX						
XX	XX	XX	XXX	X	X	XX						
XX	XX	XX	XX									

PRECEDING PAGE BLANK - NOT FILMED

EXHIBIT IV-2 DOLLAR GUIDANCE FOR BASE OPERATIONS IN AN FYDP-BASED STRUCTURE

Program Element	Major Army Field Comm							
Modified Program Element	USCONARC		USAREUR		USARPAC		USAM	
102214. #	XXX							
. (Less RPMA)		XX						
. (RPMA)		XX						
- PBG (FY)	XX							
+ - (Sch A-1)	XX							
- PBG (FY)	XX							
—	XX							
—	XX							
203196. #			XXX					
. (Less RPMA)				XX				
. (RPMA)				XX				
—			-					
—			-					
—			-					
203296. #					XXX			
. (Less RPMA)						XX		
. (RPMA)						XX		
—					-			
					-			
					-			
203596. #	XXX						XXX	
. (Less RPMA)		XX						
. (RPMA)		XX						
—	-						-	
	-						-	
Total	XXX		XXX		XXX		XXX	
				XX		XX		
(Less RPMA)		XX		XX		XX		
(RPMA)		XX						

PRECEDING PAGE BLANK - NOT FILMED

Volume I - All Commands and Agencies
Annex IV - Base Operations
Table 4 - FY & FY Program Levels

AN FYDP-BASED STRUCTURE

Major Army Field Commands and Agencies					
	USARPAC	USAMC	XXXX	XXXX	XXXX
	XXX				
	XX				
	XX				
	-				
	-				
	-				
		XXX			
		XX			
		XX			
		-			
		-			
	XXX	XXX			
	XX	XX			
	XX	XX			

PRECEDING PAGE BLANK - NOT FILMED

EXHIBIT IV-3 SAMPLE OF PRESENT NARRATIVE GUIDANCE FOR RPMA IN PBG

VOLUME I - ALL COMMANDS AND AGENCIES

ANNEX IV - BASE OPERATION (continued)

SECTION 6 - MAINTENANCE OF REAL PROPERTY (BPA 9060) (continued)

3. Priorities:

a. Priority will be given to maintenance of troop housing. Living facilities will be maintained to meet established standards by maximum use of the self-help program. Except for facilities directly related to the conduct of defense operations in strategic areas, other facilities will not be accorded a level of maintenance higher than that provided for troop housing. (Tenants - Family Housing - must be supported to the extent that Defense Family Housing Funds are available).

b. Provide timely procurement of supplies to support direct hire personnel.

c. Perform preventive maintenance.

d. Perform special work under local emergency conditions to remove hazards or to avoid interruption of essential operations.

e. Provide adequate and timely repair to permit rapid resumption of essential operations in event of breakdown.

f. Perform maintenance and repair necessary to prevent further increase, and to effect a decrease in the backlog of essential maintenance and repair (BEMAR).

g. Perform additional maintenance as required to overcome the impact of previous fund shortages, to improve living and working conditions, and to meet the standards commensurate with sound commercial and industrial practices.

h. Perform maintenance and repair of facilities at inactive installations required to support the training scheduled by the Active Army or Reserve Components.

i. Perform other maintenance and repair at inactive command facilities, (AR 210-17).

EXHIBIT IV-3 (Continued)

4. Standards of Maintenance:

a. Facilities to be used more than ten years will be maintained as necessary to preserve the asset and ensure its most economical and efficient usefulness for an indefinite period.

b. Facilities to be used from three to ten years will be given maintenance consistent with the projected useful life of the structure or program to which it is related.

c. Facilities to be used for less than three years and only to meet a temporary demand shall be maintained to the minimum acceptable standard without jeopardizing the health and safety of personnel or seriously impairing the accomplishment of the mission.

d. Inactive facilities in mobilization plans will be maintained to the extent necessary to ensure weather tightness, structural soundness, protection against fire and erosion, and as necessary to permit reactivation in period prescribed. Lay-up measures as appropriate for proper protection of the property will be applied to these facilities (AR 210-17).

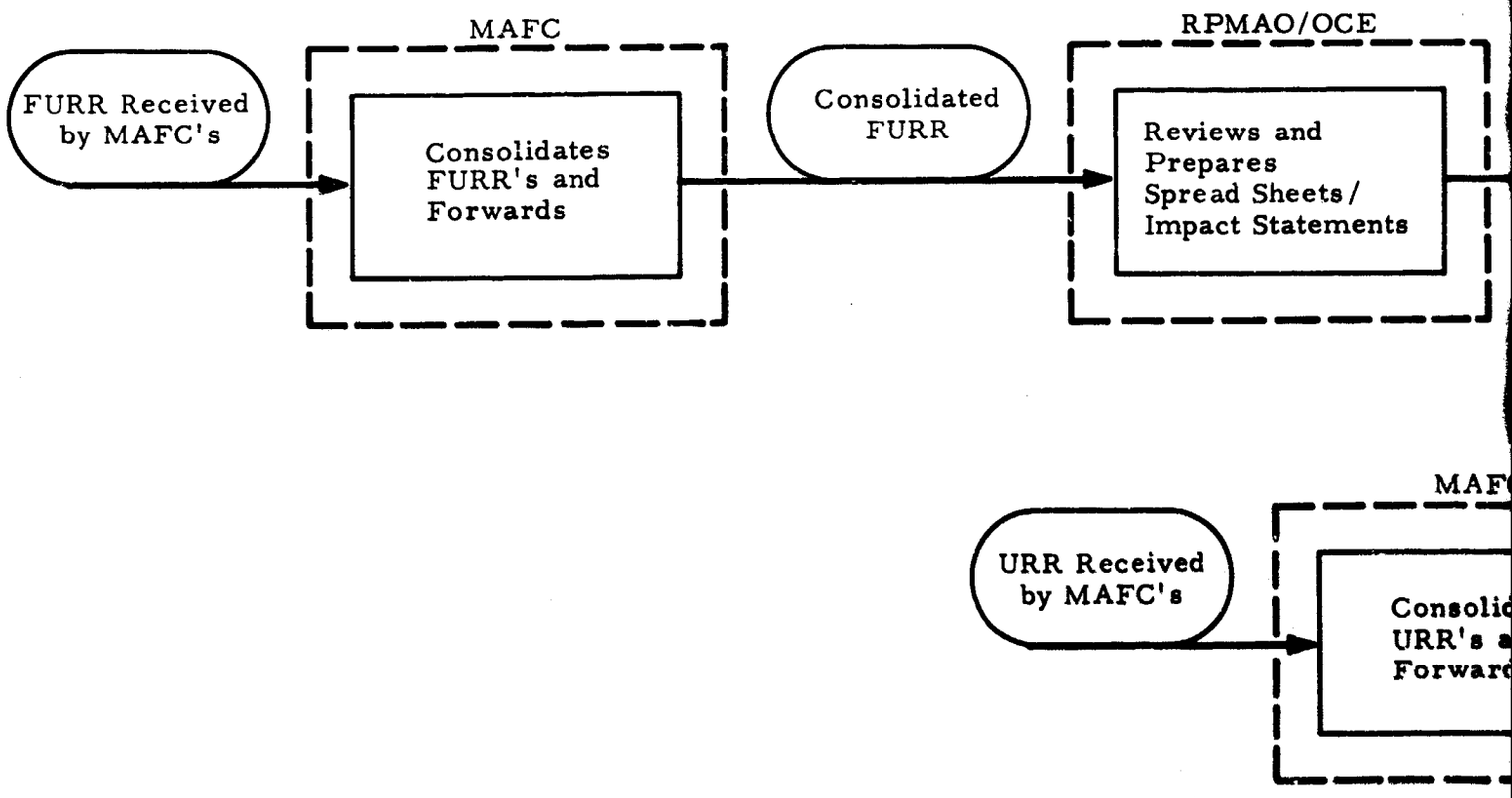

EXHIBIT IV-4 USE OF UR AND FUR REPORTS TO INFLUEN

MAY

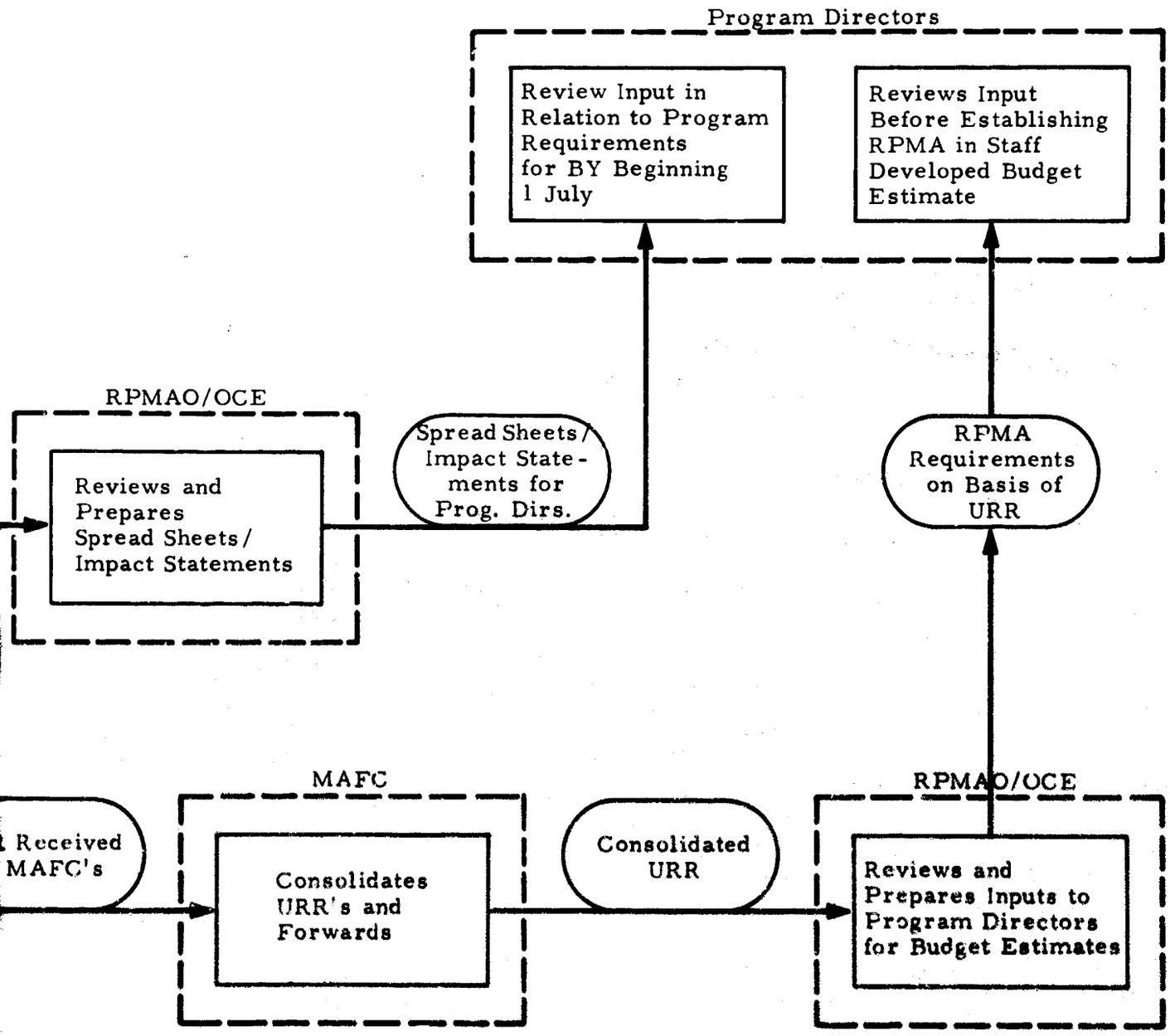

FUR REPORTS TO INFLUENCE LEVEL OF RPMA SUPPORT

PRECEDING PAGE BLANK - NOT FILMED

markup of the COB (Section IV, Volume II, Part 1), which is returned to the field in June. This markup contains the results of the apportionment request for the BY beginning in July. It also shows the initial guidance (change) for the BY 13 months hence. It is this staff-developed estimate that constitutes the PBG and on which the MAFC's in the current version of the CBE comment by exception. Receipt of the FURR by the RPMAO/OCE prior to the markup of the COB will provide for the first time, an opportunity to influence the last entry in the markup of the COB (CBE) prior to its being distributed to the field. The present method of staff development of the Army budget estimate is expected to continue, and little change in procedure will take place in the RPMA area in shifting from the present budget-program-based management structure (AMS) to the FYDP-based management structure.

b. Preparation of Budget Estimate and Associated Actions at HQ DA

To provide the required support to the Comptroller, Program Directors, the Assistant Secretary of the Army (Installation and Logistics) [ASA (I&L)], OSD, and other staff agencies, during the budget formulation process, the RPMAO of DCSLOG will have to assume a more direct role in providing such support. The development of unconstrained requirements for RPMA and the insertion of these requirements into the planning process should result in more definitive funding in the Army budget estimate for RPMA. In turn, to ensure that this funding is not diluted in preparing the Army budget estimate for base operations, Program Directors should return separate dollar guidance decisions on RPMA recommendations directly to the RPMA office rather than through the present method (portrayed in Exhibit III-6 of Volume II, Part 1). Exhibit IV-5 herein sets forth a concept whereby dollar guidance for base operations, less RPMA, will be provided to ORMO, DCSLOG, with the dollar guidance for RPMA provided separately to the RPMAO. ORMO would remain responsible for receiving an input from the RPMAO and coordinating the preparation of the necessary documentation for support of the budget estimate for base operations.

Any conflict between these offices in regard to distribution of funds would be referred to the Program Directors for resolution.

Referring to Exhibit IV-6 of Volume II, Part 1, the interrelationship that exists during the budget process between the Program Directors, ORMO, and the RPMAO/OCE will change somewhat when the functional management channel becomes operational. It is anticipated that the introduction of the RPMA system design and the forthcoming shift by the Army to the FYDP-based management structure, in the OMA appropriation, will bring into being greater recognition of RPMA activities and thereby more identification and visibility. This, in turn, will result in additional management responsibilities for the staff elements involved in RPMA from the installation level through HQ DA. Some aspects of these additional management responsibilities were discussed in Section II.

The more direct role that is visualized for the RPMAO in both RPMA funding and management will required formalization of the relationship that now exists between the RPMAO and the Program Directors. This relationship will then provide the basis for building the interface of data inputs and outputs required to support the Program Directors and to influence budget decisions pertaining to RPMA.

Participation by the RPMAO/OCE in Army and OSD/Bureau of the Budget (BOB) budget hearings has, in the past, been confined primarily to testimony in the areas of the Maintenance of Real Property Facilities (MRPF) floor and Backlog of Essential Maintenance and Repair (BEMAR). The MORP report was developed as a supporting document for the Army for use at OSD/BOB budget and apportionment hearings. As pointed out in Volume II, Part 1, of this analysis, this report has proved of little value. Data that will become available to the RPMAO/OCE when IFS and the strengthened functional management channel are in being will provide the support needed for hearings. As shown in Section III of this report, the submission of the URR and the FURR during the budget cycle will produce the type of data that can be used effectively by the RPMAO/OCE in appearing at Army and OSD/BOB

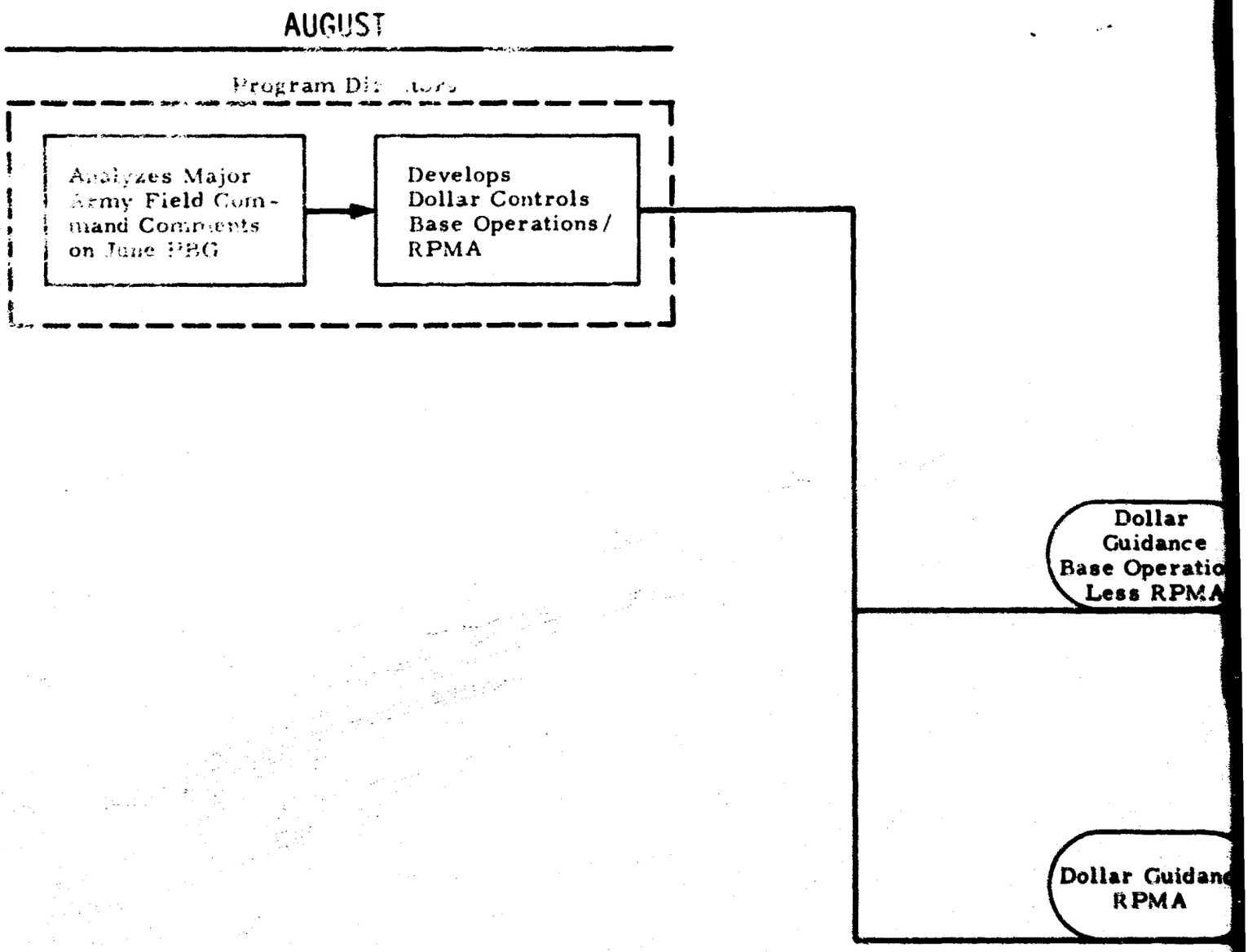

EXHIBIT IV-5 PREPARATION OF RPMA IN ARMY BUD

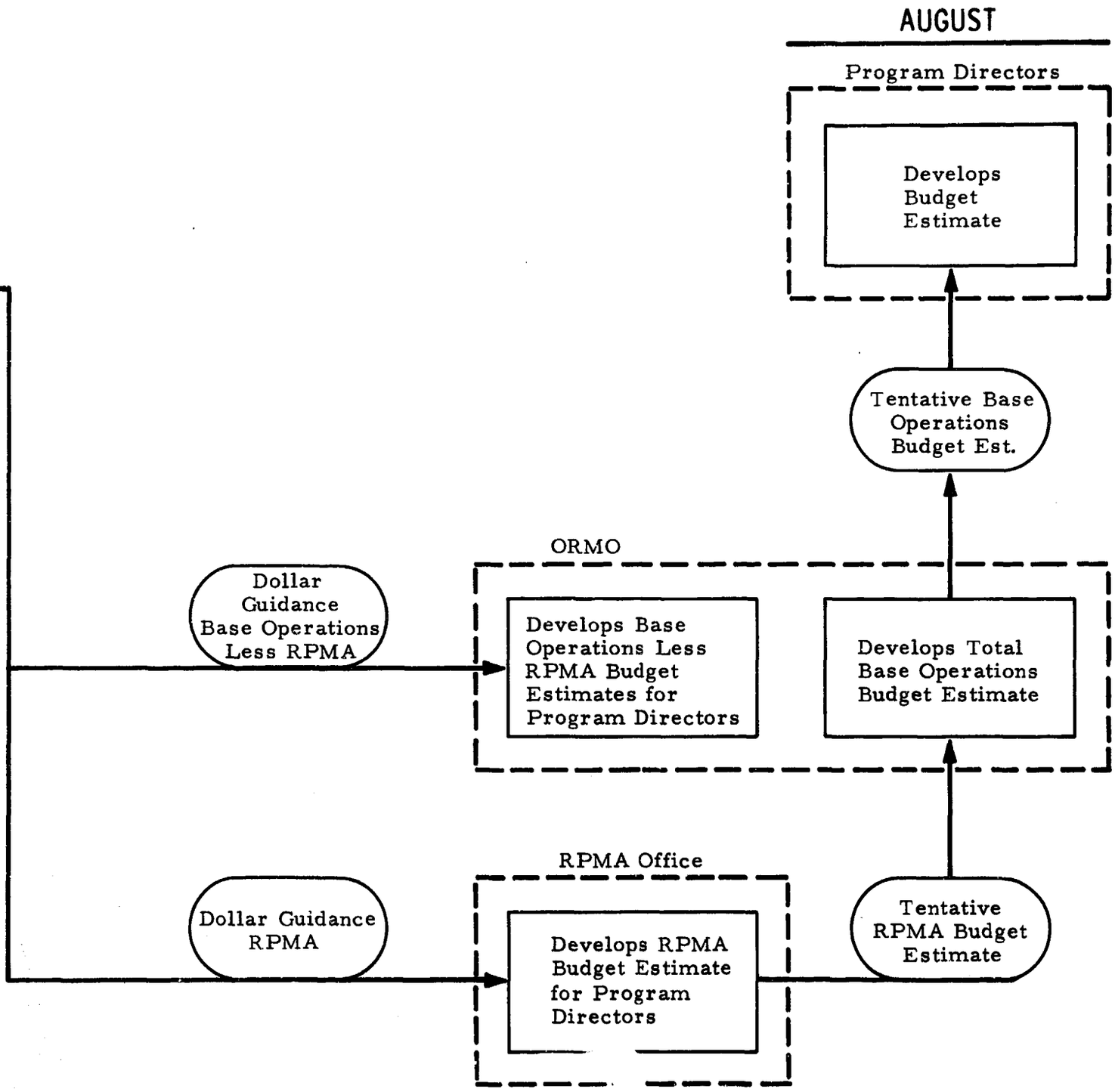

ATION OF RPMA IN ARMY BUDGET ESTIMATE

PRECEDING PAGE BLANK - NOT FILMED

budget hearings. It will also prove effective in supporting the Program Directors in defending their budget estimates. The detailed display of the data to arrive at HQ DA in these reports will be part of the system design phase for RPMA. For examples of these displays, see Exhibits III-11 and III-16.

What information displays must the RPMA manager at HQ DA have in order to present RPMA support and requirements in terms that will be intelligible to the FYDP program directors? Using Program 2 as an example, the RPMA manager's direct concern is with the five base operations program elements of Program 2:

- Base Operations - Europe
- Base Operations - Pacific
- Base Operations - Alaska
- Base Operations - South
- Base Operations - Continental United States (CONUS)

Taken together, these base operations program elements contain the RPMA support for all other program elements in Program 2. Note that these five are geographical or command oriented, whereas all of the supported program elements are functionally or type-unit configured. However, command location information is maintained within each of the type unit program elements; it is thus possible to readily relate RPMA support to all of the units in each of the geographic areas of the base operations program elements. The management techniques proposed for RPMA will permit further displays of relationships, to include the RPMA supporting particularly high-priority mission forces and force packages within one theater or spread over several. Flexibility will also permit ready retrieval, if desired, of information by installation and by MSC.

The capability to present mission packages in turn permits presentation of force packages in priority order, thus ensuring identification of the priorities for RPMA support.

It should be noted that it would also be possible to identify RPMA support costs for different types of units, within the limits of the present program element structure. It should be recognized that the

different types of units organic to divisions and brigades are not readily separable by program element. Consequently, they cannot be presented with separate nondivisional units of the same type if total support costs, Army-wide, for a type unit are desired.

With the above displays, the RPMA manager at HQ DA can state his resource requirements to the Program Director in terms of what they will support--by mission, by command, by program element, by subordinate command, even by installation. Although only Program 2 has been discussed, the same rationale and similar capabilities will be available to the RPMA manager at HQ DA in presenting his requirements to each of the Program Directors whose programs include base operations.

It appears at this time that a requirement will continue to exist for a base operations, memorandum-type budget with its breakout of RPMA to support the OMA portion of the Army submission to the President's budget. The conversion from RMS to AMS in preparing this budget will remain necessary until Congress agrees to conduct hearings on the FYDP programs rather than the present AMS appropriations. The present method of preparing this memorandum-type budget (as shown in Exhibit IV-7 in Volume II, Part 1) will remain relatively unchanged.

c. Command Operating Budget Actions

Data inputs to the COB are established annually on the basis of installation and command distribution of PBG dollar guidance consistent with the Army budget estimate included in the President's budget. It is through the instructions for preparing the COB that substantial RPMA data reporting requirements have been placed on the field. As stated in Volume II, Part 1 of this analysis, the RPMA manager and OCE can, at present, by utilizing COA channels, prescribe the type of input data required and propose revisions to the AMS, but the process is somewhat cumbersome. With the establishment of the functional management channel for RPMA, a capability will exist for data requirements to be expressed through either the

financial or functional channel. As a result, data such as that which was required as an input to the COB (FY 1970) for the MORP report would move through the functional channel rather than the financial channel.

Use of the functional management channel and the IFS data base to move detailed RPMA supporting data will reduce RPMA data inputs to the TAABS output schedule of the COB at the installation level to summarized RPMA data (functional category, elements of expense), with a resultant significant saving in man-hours in preparing this output schedule. Supporting RPMA data for the summarized data in the COB will be provided by the FURR. The data for this report will be an output, in automated form, from the IFS data base.

The content of the FURR will be available at each echelon from installation to HQ DA to provide the staff engineer with detailed data required to defend the RPMA portion of base operations in the COB. Moreover, should the post engineer/staff engineer become a member of the PBAC at all echelons below HQ DA, as recommended in Volume II, Part 1, he will be able to directly influence the PBAC review of the COB with the data available to him through the functional management channel.

It is visualized that, except for the code structure (AMS) used at present, the COB will retain its present format when the FYDP-based management structure is implemented in the OMA area. It is anticipated, however, that the use of the COB for special reporting of the RPMA data such as the MORP report will no longer be necessary when the functional management channel has been established.

d. Preparation of the Approved Operating Budget

Little change should occur in the preparation of the initial AOB, or to subsequent revisions that occur during the execution year. The Army has already structured the AOB to provide financial data for OMA by FYDP program, with a breakout by AMS budget programs and military personnel expenses under each FYDP program.

Exhibit IV-6 offers an example of the AOB in its present format. As the AOB applies to RPMA in a general sense only, these comments are offered primarily to complete the picture of the changes anticipated in the forthcoming shift by the Army to the FYDP-based management structure for managing OMA resources.

e. Execution, Review, and Performance Actions

The development of the RPMA portion of the BER at the installation level will differ from the present format in two ways. First, costs by element of expense will be reflected against program elements and functional categories of the FYDP as opposed to Budget Project Accounts (BPA) and Summary Activity Accounts (SAA). Second, detailed RPMA data will be removed from the financial channel and will be provided as supporting data in the MYRR moving through the functional channel concurrently with the BER in the financial channel.

The last financial report to be discussed is the PYR. This report, which is forwarded to HQ DA annually in August, is submitted in a format similar to the COB and BER for the TAABS output schedule, but without a narrative supplement. As with the COB and BER, the TAABS output schedule for the PYR presently carries a large amount of detailed RPMA data for utilization by the RPMAO/OCE for budget support and analysis purposes. In the RPMA concept for system design, detailed data will be provided through the functional channel in the PYPR at the time the PYR is rising through the financial management channel. This new report will provide a capability for comparing actual performance against what had been programmed for that year. This will differ markedly from the present PYR, which provides data only for the OMA appropriation by which RPMA can only be used to measure what was actually accomplished during the prior year in OMA programs.

5. Financial-Functional Interface at All Levels

With IFS, the financial reporting structure of the FYDP-based management structure can be used to advantage for improving

EXHIBIT IV-6 APPROVED OPERATING BUDGET

Approved Operating Budget	Issued by	Char
Appropriation: Operations, Army, FY 1969	Issued to	

Primary Program	Cumulative Direct Expense Program				Change in Selected Resources	I Obl
	1st Qtr.	2d Qtr.	3d Qtr.	4th Qtr.		
(1)	(2)	(3)	(4)	(5)	(6)	
Program 1:						
Mil. Pers. Exp. BP 2000						
Program 2:	XX	XX	XX	XX		
Mil. Pers. Exp. BP 2000	XX	XX	XX	XX		
Program 3:						
Mil. Pers. Exp. BP 2900						
Program 5:	XX	XX	XX	XX		
Mil. Pers. Exp. BP 2600	XX	XX	XX	XX		
Program 7:						
Mil. Pers. Exp. BP 2200						
Program 8:	XX	XX	XX	XX		
Mil. Pers. Exp.	XX	XX	XX	XX		
BP 2100	XX	XX	XX	XX		
BP 2400	XX	XX	XX	XX		
BP 2530	XX	XX	XX	XX		

			Change No.	Allotment Symbol		
				Effective Date		
se Program		Change in Selected Resources	OMA Direct Obligations	OMA Funded Reimb.	OMA Automatic Reimb.	Total OMA Obligations
Qtr.	4th Qtr.					
4)	(5)	(6)	(7)	(8)	(9)	(10)
XX	XX					
XX	XX		XX	-	-	XX
XX	XX					
XX	XX		XX	-	-	XX
XX	XX					
XX	XX					
XX	XX		XX	-	XX	XX
XX	XX		XX	-	-	XX
XX	XX					

PRECEDING PAGE BLANK - NOT FILMED

RPMA management. This will be accomplished by aggregating or summarizing cost data available at the installation level in a number of ways useful for determining RPMA performance in dollar terms. For example, RPMA costs can be determined for a specific program at each installation and rolled up to HQ DA, thereby giving RPMA managers the ability to compare accurately RPMA dollar guidance established by the Program Director with total RPMA costs actually incurred. Costs can also be aggregated for facilities by program or by installation, or costs can be determined for specific program elements to determine total operating costs. Data of this nature when combined with data from the functional channel, can provide improved management of RPMA and data necessary to defend or reclama decisions made at the HQ DA/OSD levels that have impact on RPMA funding.

As described earlier, it is visualized that the system design for improved RPMA management will provide a means for RPMA management data (detail below the functional category/BPA) to be moved without recourse to the present Comptroller financial data channel. At present, RPMA management data, with the exception of the TDR, the CAUO Report, and specialized reports such as insect control, must travel "piggyback" within the financial data channel for lack of any other means of transmission. This aspect of moving RPMA data through the Comptroller's financial management channel has been discussed in visits with Comptroller personnel at all echelons, and they are in general agreement that this degree of detail is not required for financial reporting and management.

The system design concept for RPMA will utilize the IFS data base for RPMA management and the movement of associated data, thus freeing the Comptroller's financial data management channel to carry only those data required for Comptroller needs. System design for the RPMA module will incorporate cost and performance data elements at the installation level for entry and update into the IFS data base; these data elements can be utilized by the installation to improve management. When financial reporting is required

(COB, BER), RPMA supporting data, and other RPMA data now carried in the financial channel, will move through the RPMA functional management channel with coordination at each echelon to ensure adequate support to the Comptroller. Exhibit IV-7 depicts this concept. While not fully solving the problems of identity and visibility of RPMA in the budget process, strengthening the functional management channel for RPMA will, when combined with the improvement in these areas gained through use of the IFS uniform code structure correlated with the FYDP-based management structure (Functional Categories 9, 10, 11, and 12), result in substantial improvement over the present system.

To ensure that all management requirements are met, both financial and functional, a major task to be accomplished in the RPMA system (functional design phase) will be to develop, in detail, the Comptroller-Program Director-Engineer interface at all echelons of command. On the basis of this system design, detailed report formats and the data elements contained therein will be developed to meet the Comptroller's needs. At present, the installation data base is used to store all cost and performance data for the post engineer. Reports produced by the post finance and accounting office for the post engineer in most cases only partially satisfy the post engineer's needs. This is due primarily to the reports being structured more for financial management than facilities management. It is assumed that, with the introduction of IFS and its associated data base, the post engineer will utilize the IFS data base for his functional activity reviews, cost distribution applications and feeder data for the RPMA portion of installation cost accounting, and the preparation of reports to move through the functional management channel.

Another major task to be accomplished is to determine what post engineer data, in addition to cost data, should be stored in the installation data base for use in local management by the Comptroller. As each installation differs in this respect, and as local management must respond to the desires of the post commander, system design may have to provide for command-unique requirements at the installation level to allow data transfers in response to the needs of the local commander.

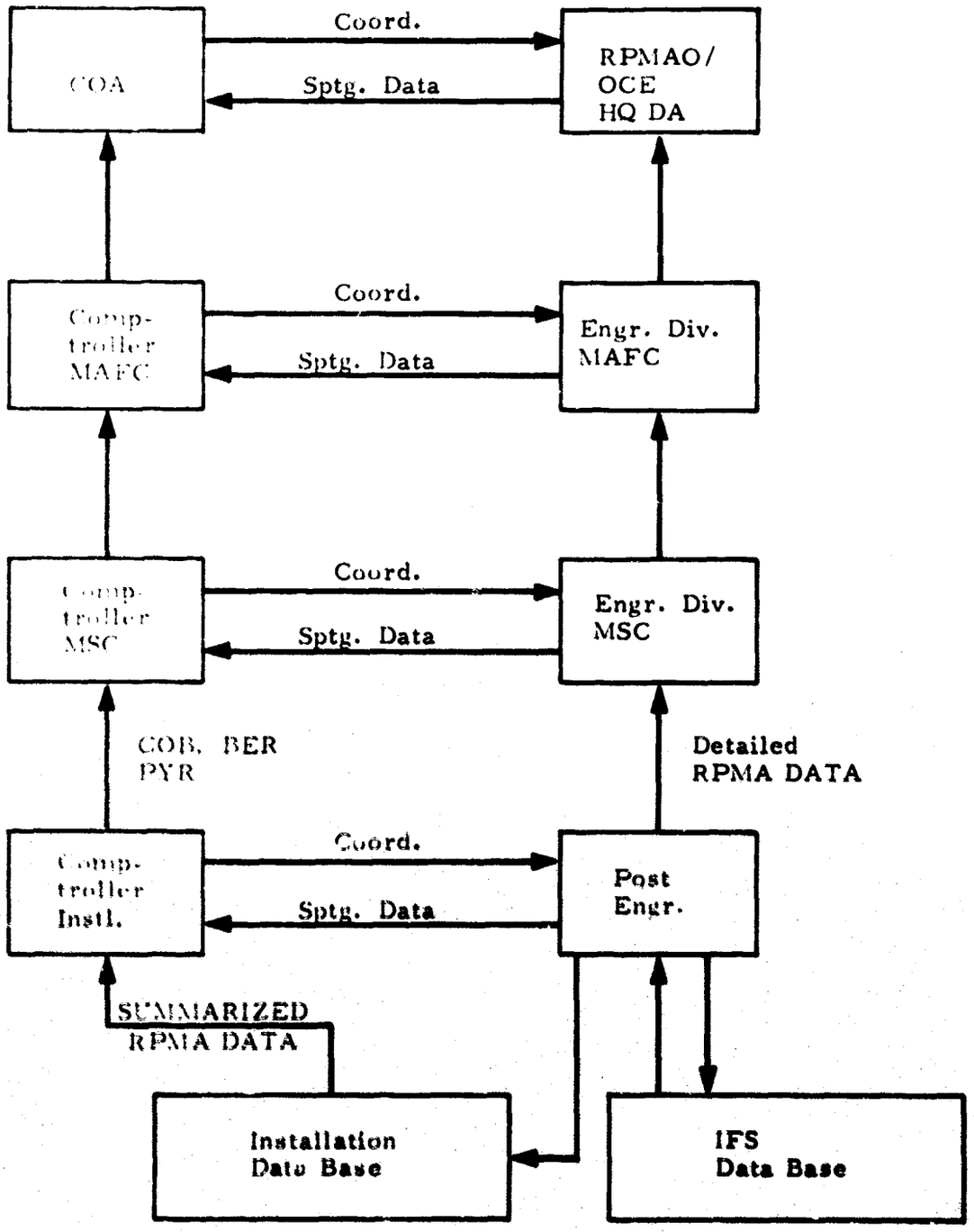

EXHIBIT IV-7 CONCEPT FOR FLOW OF RPMA AND FINANCIAL DATA

A similar task will exist at all echelons for developing an interface between the financial and RPMA management channels. For example, system design for the HQ DA level will include, as part of the design, those reports/spread sheet data elements that will be prepared by RPMAO/OCE for use by Program Directors and COA analysts in programming and budgeting of RPMA funds. These detailed interfaces at all echelons will be developed in the system design phase and will require more definitive information from the Army outlining the means for implementation of the FYDP-based management structure within the OMA budget process.

RPMA system design for the functional management channel will interface also with whatever data requirements are identified in the Executive Decision Information Requirements Status Report, which will be produced and presented as an annex to the Phase IIB Development Plan Report.

6. RPMA in the Non-OMA Appropriations

It was pointed out in the Volume II, Part I, analysis of RPMA that the problem of identity and visibility of RPMA in the non-OMA appropriations code structure differed both in degree and importance with OMA and among the non-OMA appropriations themselves. Preliminary conclusions arrived at in that analysis stated that partial visibility and identity of RPMA was available in the RDTE and Family Housing Management Account (FHMA) appropriations, with little or no visibility evident in the MPA and PEMA appropriations and the AIF.

Further analysis has brought forth some major findings with respect to RPMA in the non-OMA appropriations. It was learned that the budgeting, funding, and deferred maintenance problems in RPMA that are of such significant concern in the area supported by the OMA appropriation do not, for the most part, exist in the RPMA area supported by non-OMA appropriations. For example, a visit to one Class II installation financed under the AIF indicated no budget problems in RPMA and a record of no Backlog of Essential Maintenance and Repair (BEMAR) for the past 11 years. A visit to another Class II

installation financed under RDTE revealed adequate annual funding for RPMA with only a small BEMAR in 1 year since 1960. The only problem in RPMA at the second installation appeared to be in manpower--the post engineer would like to have had more civilian personnel assigned.

Another example that further strengthens these findings was surfaced during the facilities condition test conducted by PRC for 4 weeks in April and May of 1969 at a Class I and a Class II installation. On a scale of C1 through C4 depicting condition--with C1 reflecting an index comparable to facilities up to design standards (i.e., adequate RPMA funding and post engineer performance), it was interesting to note that most structures at the Class I installation were in condition C2 and C3, while most structures at the Class II installation were C1. This difference in condition may be attributable to the fact that RPMA in the non-OMA appropriations is funded more adequately because the installations/activities involved have an opportunity to express their total needs prior to the authorization of funds. Another factor that contributes to this apparent difference is that, in the non-OMA appropriations area, RPMA-type support is accorded a higher priority in relation to mission than in the OMA appropriation. For example, at a Class II installation operating with an AIF, it is recognized by the tenants that RPMA support must be planned and budgeted for by them. The RPMA related to the AIF operations is adequately financed through the fund management technique of establishing customer charge rates, which include distribution of overhead charges.

Although RPMA functions are performed in the same way at all Army installations, each of the non-OMA-appropriation-supported RPMA activities differs in how its RPMA support is funded for and reported on. This funding for RPMA in the non-OMA-appropriation-supported area varies from the direct correlation found in the automatic reimbursement of an installation OMA account--as is the case with FHMA appropriation--to an after-the-fact determination of funds expended for RPMA support--as is the case with PEMA-supported RPMA at a Government-owned, contractor-operated installation.

The following is a summary of current non-OMA appropriations funding and reporting channels pertaining to RPMA support. Also shown for each appropriation are comments as to the adequacy of these channels to meet the needs of the proposed RPMA system.

a. Family Housing Management Account

The FHMA receives the bulk of its RPMA support from the post engineer on the basis of automatic reimbursement. Due to the nature of FHMA, RPMA support can be estimated with some degree of accuracy; these estimates are included in post engineer planning. The fiscal structure of FHMA and the control of this appropriation provide the FHMA managers with the means to anticipate, and budget for, adequate RPMA support. To provide more visibility and identity of RPMA data in the FHMA for budget purposes would require an expansion and revision of the management structure of this appropriation without any appreciable gain in RPMA support over the present procedure.

b. Research Development Test and Evaluation

The RDTE funding of RPMA was discussed in Volume II, Part 1, of this analysis. Direct funding for RPMA from RDTE funds is limited to three installations. A considerable portion of RDTE funding is for specified project tasks and includes support costs, be it an activity under the AIF or an activity at a Class I installation. Other RPMA is provided on a reimbursable basis chargeable to RDTE Program-wide management support. Present RPMA funding channels appear to be adequate in the RDTE area to meet new system needs.

c. Army Industrial Fund

The AIF budgets approximately $1.25 billion annually, of which $80 million is for RPMA support. Each August the Army Materiel Command (AMC) and Military Traffic Management and Terminal Service (MTMTS) receive budgets prepared by the AIF installations for the BY beginning 10 months later. RPMA costs can be developed from these budgets. The budgets are reviewed by AMC and MTMTS

and then forwarded to the COA for further review by HQ DA. Upon completion of the HQ DA review, the consolidations of the AIF budgets are forwarded to OSD/BOB. Individual-installation AIF budgets are held on an "on-call" basis to be provided OSD/BOB if required. The AIF consolidations tie in with DOD Program Elements (e.g., 65001A R&D industrially funded activities; 431110 Port Terminal Operations) and are reviewed by OSD in that format. The review of the AIF budgets by OSD results in a Program Budget Decision (PBD) to the Services, and necessary revisions are made on the basis of the PBD.

Tenants operating under an AIF must budget and fund for RPMA support. The "pay-as-you-go" characteristics of the AIF encourage adequate funding, which in turn generally results in adequate RPMA support. The present arrangement for RPMA support at installations with an AIF appears, in most cases, to be providing the RPMA support required to accomplish the mission.[1]

d. Procurement of Equipment and Missiles, Army

RPMA in the PEMA appropriation is completely different in nature from the other non-OMA appropriations. PEMA funds are used for the procurement of equipment and missiles. This can vary from a procurement contract for end-items produced in a contractor-owned plant to a contract for end-items produced in a GOCO plant. Within this framework, presentation of RPMA financial requirements in a budget program or program element code would be extremely difficult, if not impossible. The budget for PEMA each year is based on procurement of end-items with many variables with respect to where the end-item will be produced. Costs for RPMA, therefore, must be part of the unit price in budgeting. One possibility in this area for generating

[1] One AIF installation visited did have unfinanced requirements for FY 1969 of $4.7 million. Total BEMAR for AIF in AMC forFY 1968 was $4.7 million.

information is for the Army to develop a set of sound empirical factors that can be related to RPMA in the unit price for PEMA procurement.

e. Military Personnel, Army

There is no direct identification of RPMA in the AMS codes of MPA. The Army is now costing military personnel to RPMA through the accrual accounting system. Therefore, it is not considered either necessary or feasible to require greater visibility and identity of RPMA in this appropriation.

f. Military Construction, Army (MCA)

The MCA appropriation, as presently structured, does not include RPMA costs.

Funding and financial reporting channels for RPMA in the non-OMA appropriations appear, in general, to be adequate for meeting the needs of the proposed RPMA system. RPMA efforts supported by non-OMA appropriations, however, are limited in current reporting procedures and code structures in the financial channel to only partial visibility of the dollars spent for RPMA.

7. RPMA Functional Design

The RPMA functional design document to be produced in Phase IIB of IFS will provide for application in principle of the RPMA functional management system to non-OMA appropriations and funds, including OMA National Guard. The design document will describe how each of the non-OMA appropriations will fit in the new PPBER reporting system.

As an evolutionary matter, the Army may wish to consider modification of the code structures of these non-OMA appropriations so that they will present the full financial support of RPMA. Accordingly, greater reliance for management purposes must be placed on the newly strengthened functional channel for RPMA. Implementation of the RPMA functional management channel for the activities supported by non-OMA appropriations will provide the RPMAO/OCE with an approved capability to monitor and evaluate performance in the non-OMA area, to furnish RPMA management guidance, and to participate, to a varying degree, in the RPMA funding.

V. IFS DATA UNIFORMITY

A. Background

The requirement for data uniformity in IFS has been identified and discussed in two previous reports of the IFS documentation series.[1] In summary, these reports--particularly the RPMA report--emphasize that the current reporting of facilities data is contained in a number of reporting systems utilizing different forms of data identification. The data in these reporting systems overlap, are duplicated in many cases, and often cannot be correlated from one system to another. The multiple inputs of the same data into several systems seems uneconomical and prone to unnecessary errors.

The data uniformity problem results from two factors: (1) the reporting of data in several reporting systems, and (2) the different code structures used to identify facilities data. The proposed concept of a single functional engineering reporting system, discussed earlier in this report, will correct the first data uniformity factor. This section of the report will address the second factor--data identification--by presenting a concept for IFS data management.

This analysis was included with the RPMA task because a majority of the uniformity problems are associated with the reporting of RPMA data. But the analysis performed actually included the total needs of IFS and was not limited to RPMA data identification.

B. Approaches

The principal approach was to analyze the existing code structures (AMS, RMS, FC&CCC, etc.) and from them develop a satisfactory concept for recording and relating IFS data to the reporting and operating requirements of the IFS management areas. For example, the

[1] PRC R-1209, RPMA Management Function Analysis for the Integrated Facilities System, Vol. II, Part 1, June 1969; and PRC R-1209, System Definition for the Integrated Facilities System, Vol. I, June 1969.

performance of a specific maintenance task on a building must be related to the real property records for that building so that historical maintenance costs can be accumulated and retrieved for use by both the RPMA management area and the New Construction management area.

An attempt was first made to define a single uniform code that would provide for the recording and relating of IFS data reporting requirements. Such a code would incorporate all the features of all existing code structures and provide the desired relationships of data to all management areas. It would consist of a rigidly defined set of data codes of a fixed number of digits. Subsequent analysis in this direction demonstrated that this approach was not feasible. The principal reasons for this conclusion are:

1. A single code that would incorporate the existing features of all the present code structures would be excessively large. The single code would have to incorporate such things as program element, element of expense, craft performing work, building number, FC&CCC, installation code, and many others.

2. The single code, because of its size, would impose an inordinate workload on personnel recording the data.

3. The many elements of the single code would encourage a high probability of error being introduced into the system.

4. A single code would not be responsive to changes in coding systems or the introduction of new coding requirements (such as RMS replacing AMS). These changes would require (1) changing the data input forms and (2) retraining the personnel recording the data.

5. With a single code, it would be difficult or impossible to add additional requirements to relate facilities data in any manner different from the relationships defined at the time the single code was first structured.

The second approach was to develop a concept for recording and relating facilities data employing data management techniques. Data management techniques relate to the procedures used in data management systems for storing, retrieving, and updating data. These data

management system procedures deal primarily with the structuring and indexing of the data in the system to obtain the required classifications and relationships needed to support the functional processes.

The utilization of data management techniques would minimize the input data required for entry every time an input was made. The system would associate with the data being entered all the required data element codes, using table lookup and indexing techniques, triggered by certain key data element codes included in the input. The term "data element," as used here, is in accord with the Standardization Program definition;[1] i. e., it is a grouping of information units that has a unique meaning and subcategories of distinct values. Each subcategory may be represented by a data element code. An example of a data element is "Facility Classes and Construction Categories Code." One of the subcategories of FC&CCC is "Enlisted Men's Barracks Without Mess" and is represented by the data element code 72210.

Exhibit V-1 illustrates an example of data management techniques. Under the techniques, a workman at an installation, after performing some repair on a building, records the building number--where the work was performed, his craft, the date performed, and the hours worked. The data management system then associates with this input data the FC&CCC and the installation code by means of a table lookup from the real property record associated with the building number. As the example illustrates, the development of the relationships with all the applicable coding structures is a function of the data management system, not of the personnel initially recording the data. Personnel recording the data are required to enter the key data element that will enable the data management system to generate the relationships required. These techniques are similar to those utilized in payroll systems, whereby an employee enters his payroll number on his time card and the computer system then relates the payroll number to the employee's social security number and other descriptive or historical data pertaining to that employee.

---

[1] AR 18-10, Data Elements and Codes Standardization Program, 27 October 1965.

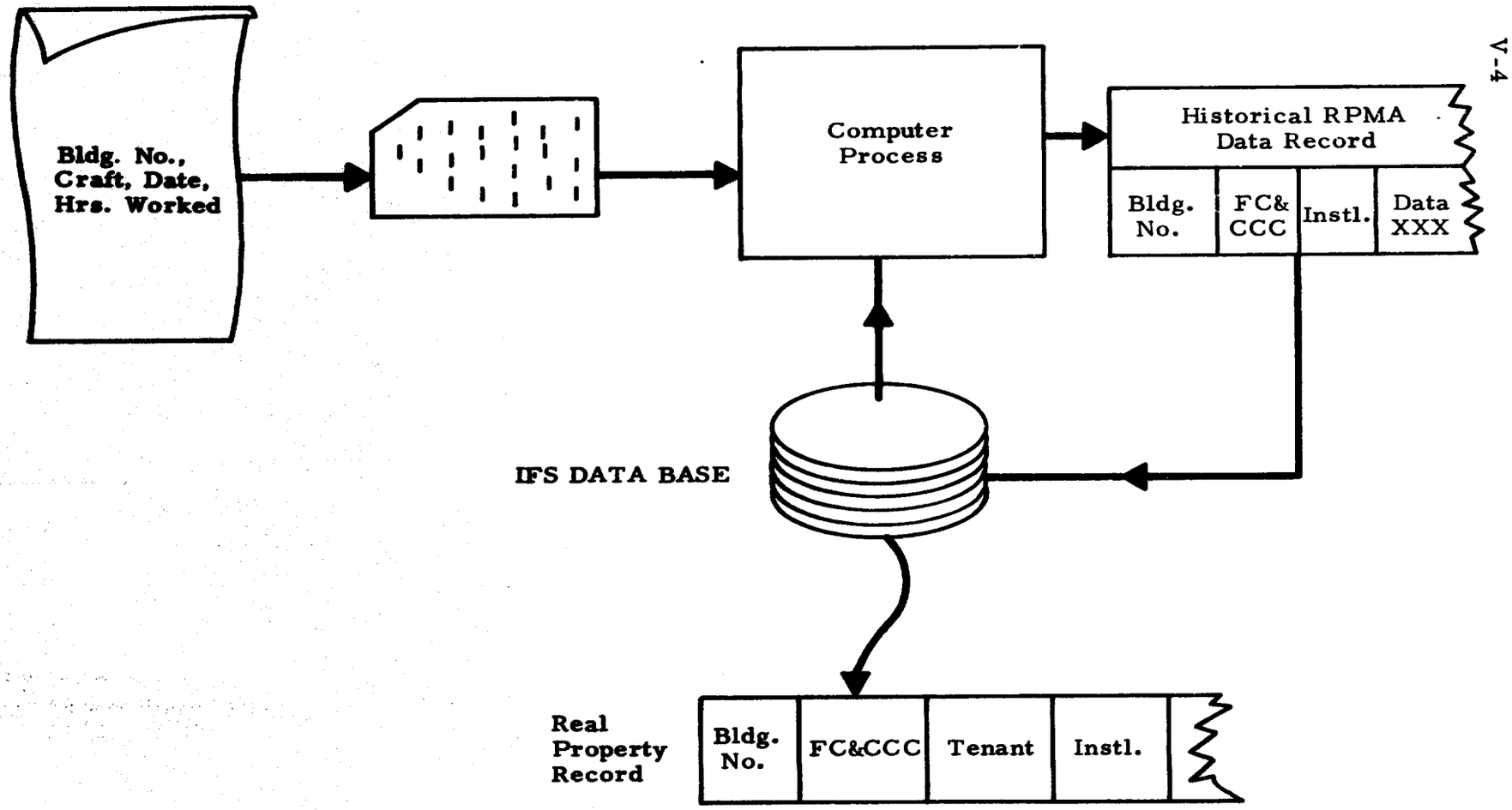

EXHIBIT V-1 DATA MANAGEMENT TECHNIQUE

The second approach, utilizing data management techniques, was selected as the most feasible and practical approach to IFS data identification for the following reasons:

- It reduces to a minimum the workload required by personnel recording the input data and takes advantage of data management technology.
- It provides flexibility for the addition or changes of coding structures (code changes could be accommodated by altering tables in the computer system).
- It provides for the inclusion of additional data relationships by changing the table lookup or indexing techniques in the data management system without impinging on the personnel inputting the data.

After selecting the second approach, analysis was continued to identify the key data elements. The following subsection describes the concept that resulted from this further analysis.

C. Data Management Concept

The objective was to identify the key data elements that are required to be entered with IFS data. Analysis revealed that they can be classified into groups that satisfy five requirements:

- Who is performing the activity or work, and for whom is it being performed?
- What is the activity or work being performed?
- Where is the activity or work being performed?
- When was the activity or work performed, or when is it required?
- How was the activity or work performed?

In Exhibit V-2, these five requirements are shown associated with the respective key data elements identified during the analysis. An asterisk (*) denotes those key data elements that normally must be input manually; the remaining values of the data elements would be generated automatically within the computer.

EXHIBIT V-2 KEY DATA ELEMENTS

Note: Underlined words are data elements. Examples of subcategories appear under the data elements.

	PERFORMING ACTIVITY/CUSTOMER							
WHO	Prog. El.	Tenant	Project	Funding	Funding Status			
	Cmd. Instl.	Cmd. Organ. Prog. El.		OMA RDTE • •	Finan. Unfin. • •			
	FUNC. CATEGORY *	CRAFT-SERVICE *	EL. OF EXPENSE *					
WHAT	Oper. of Util. Maint. of Real Prop. Minor Const. Engr. Services	Woodwork Plumbing • • Entomology	El. of Exp. (DOD) El. of Exp. (Army)					
	FACILITY DESCRIPTORS							
WHERE	Fac. No.*	FC&CCC	Fac. Group	Utility Capacity	Status	Type Const.	Age	Component*
			Mob. Bks. • •	(XXXX BTU)	Act. Inact.	Perm. Semi-perm. Temp.		Roof Floor • •
	TIME REQUIRED		TIME PERFORMED					
WHEN	Date, Freq.		Date *					
	CAT. OF WORK *							
HOW	IJO SOO SO Contract							

Most of the data elements selected are standard Army or OSD data elements; these have their own codification. However, several of the data elements that appear necessary for the IFS are non-standard and do not have codes of their own. These include the funding status, craft-service, facility group, component, and category of work.

Suggested codification of the subcategories will be determined largely by ease of use for the user. Where possible, the suggested codes will be identical with abbreviations already in common use. For example, a coding of the "service order" subcategory of the data element "category of work" might be "SO."

The expansion of the facility category code to meet overall IFS needs was addressed by both the AS&R and the Facility Planning Modules. Since the RPMA functional design may uncover additional information requirements, a refined definition of these data elements in terms of their subcategories and associated codes will be included in the system specifications.

D. Determination of Key Data Elements

The basis for determining the key data elements was an examination of the data classifications found in the proposed reports described in earlier sections of this volume (URR, FURR, SAWP, MYRR, and PYPR), and the major current functional reports (TDR, CAUO, and MORP). Appendix A presents the relationships between data elements and reports, with the key data elements grouped into the five categories mentioned in subsection V.C. above. Definitions of each of the data elements and other data elements which may be determined necessary during system design for exception reporting and queries will be contained in the IFS Data Dictionary, to be produced in Phase IIB.

The analysis also included the translations between the following Army and OSD classifications:

- Army Element of Expense versus OSD Element of Expense
- Present Base Operations 9050, 9060, 9070, and 9080 Activity Accounts versus OSD Functional Categories

These translations, presented in Appendixes C and D, will be accommodated by the IFS data management system.

E. Data Base Development

The foregoing summary of analysis, findings, and concepts will provide guidance to the development of the IFS data base during Phase IIB of IFS development. The functional requirements data management system and the data management technique requirements of IFS will be specified as part of the IFS Detailed Functional System Requirements (DFSR). These requirements will cover the IFS data editing, updating, indexing, and retrieving characteristics and will be presented in the IFS DFSR document together with the data base description.

APPENDIX A

UNIFORM CODING METHODOLOGY KEY DATA ELEMENTS

		Recommended Reports					Current Reports		
		URR	FURR	SAWP	MYRR	PYPR	MORP	TDR	CAUO
WHO	Activity Performing Work								
	Program Element (FYDP)	X	X	X	X	X			
	Major Army Field Command	X	X	X	X	X	X	X	X
	Major Subordinate Command	X	X	X	X	X	X	X	X
	Installation	X	X	X	X	X	X	X	X
	Customer								
	Tenant Cmd.[1]	X	X	X					
	Tenant Organ.[1]			X					
	Project I.D.	X	X	X	X	X			
	Funding Source (OMA, RDTE, . . .)	X	X	X	X	X		X	
	Funding Status (Finan./Unfin.)		X		X	X		X	
WHAT	Functional Category (9050,60,70,80)	X	X	X	X	X	X	X	
	Work Description								
	Craft-Service	X	X	X	X	X	X		
	Priority	X	X	X	X	X			
	Work Order No.								
	Nature of Expense (Labor, Contract, . . .)								
	Element of Exp. (DOD)						X	X	
	Element of Expense (Army)	X	X	X	X	X			
WHERE	Facility Descriptors								
	Facility Number								
	FC&CCC[1]	X	X	X		X	X		
	Utility Capacity						X	X	X
	Facility Size[1]								
	Facility Status[1] - Active/Inactive/Standby/Excess						X	X	
	Facility Component	X		X		X			
	Type Construction[1] - Perm/Semi-Perm/Temp.	X		X		X			
	Facility Age[1]								
	Facility Group (Mob. Bks., Mess Halls, . . .)	X	X	X	X	X			
WHEN	Time								
	Date Req./Planned	X	X	X					
	Required Frequency	X							
	Date Completed				X	X	X	X	X
HOW	Category of Work (SOO, IJO, . . .)			X	X	X			

[1]Data element furnished by AS&R module

APPENDIX B

ELEMENT OF EXPENSE TRANSLATIONS

PRECEDING PAGE BLANK - NOT FILMED

DOD Elements of Expense (DOD 7220.20) / Army Elements of Expense (AR 37-100)	Mil. Personnel	Mil. Trainees	Mil. Unassigned	Civilian Personnel	Travel of Personnel	Transportation of Things	Utilities and Rents	Communications	Purchased Equip. Maint. (Intra-DOD)	Purchased Equip. Maint. (Commercial)	Printing and Reproduction	Other Purchased Services	A/C POL
	01	02	03	04	05	06	07	08	09	10	11	12	13
110				X									
120				X									
130				X									
141	X												
142		X											
143			X										
144	X												
145	X												
146	X												
147	X												
148	X												
160				X									
170				X									
211					X								
212					X								

PRECEDING PAGE BLANK - NOT FILMED

Purchased Equip. Maint. (Commercial)	Printing and Reproduction	Other Purchased Services	A/C POL	Ship POL	Other Supplies	Equipment	Other Expenditures	Service Credits	DOD Elements of Expense / Army Elements of Expense
10	11	12	13	14	15	16	17	18	
									1XX Personnel Services
									110 Personnel Compen. (Direct Hire, U.S.)
									120 Personnel Benefits (Direct Hire, U.S.)
									130 Benefits for Former Personnel
									141 Mil. Personnel, Army
									142 Mil. Trainees and Students
									143 Mil. Unassigned
									144 Mil. Personnel, Loaned
									145 Mil. Personnel, Borrowed
									146 Mil. Personnel, Air Force
									147 Mil. Personnel, Navy
									148 Mil. Personnel, Marine Corps
									160 Personnel Compen. (Direct Hire, Foreign Nat.)
									170 Personnel Benefits (Direct Hire, Foreign Nat.)
									2XX Contractual Services and Supplies
									211 Travel and Trans. - U.S. Personnel Stationed Abroad and Traveling Abroad (Per Diem)
									212 Travel and Trans. - U.S. Personnel Stationed U.S. Traveling Abroad (Per Diem)

PRECEDING PAGE BLANK - NOT FILMED

DOD Elements of Expense (DOD 7220.20) / Army Elements of Expense (AR 37-100)	Mil. Personnel	Mil. Trainees	Mil. Unassigned	Civilian Personnel	Travel of Personnel	Transportation of Things	Utilities and Rents	Communications	Purchased Equip. Maint. (Intra-DOD)	Purchased Equip. Maint. (Commercial)	Printing and Reproduction	Other Purchased Services	A/C POL	Ship POL
	01	02	03	04	05	06	07	08	09	10	11	12	13	14
213					X									
214					X									
215					X									
219					X									
220						X								
231							X							
232								X						
240											X			
251												X		
252														
253									X					
254									X					
255									X					
256												X		
257												X		
258												X		

PRECEDING PAGE BLANK - NOT FILMED

Maint. (Commercial)	Printing and Reproduction	Other Purchased Services	A/C POL	Ship POL	Other Supplies	Equipment	Other Expenditures	Service Credits	DOD Elements of Expense / Army Elements of Expense
10	11	12	13	14	15	16	17	18	
									213 Travel and Trans. - Payment to Foreign Carrier for Travel of U.S. Military, U.S. Civilian and Foreign National Personnel
									214 Travel and Trans. - Travel of Direct Hire Foreign National Pers. (Per Diem)
									215 Travel and Trans. - Travel of Indirect Hire Foreign National Pers. (Per Diem)
									219 Travel and Transpor. - All Other
									220 Transportation of Things
									231 Utilities and Rents
									232 Communications
	X								240 Printing and Reproduction
		X							251 Purchased Services
									252 Purchased Equipt. Maintenance (OOCO/COCO)
									253 Purchased Equipt. Maintenance (Other Mil. Depts.)
									254 Purchased Equipt. Depot Maint. (Organic, Non-AIF)
									255 Purchased Equipt. Depot Maint. (Organic, AIF)
		X							256 Management Studies and Projects
		X							257 ADP Services, Studies, and Projects
		X							258 Operations Research (OR) Studies or Projects

DOD Elements of Expense (DOD 7220.20) / Army Elements of Expense (AR 37-100)	Mil. Personnel	Mil. Trainees	Mil. Unassigned	Civilian Personnel	Travel of Personnel	Transportation of Things	Utilities and Rents	Communications	Purchased Equip. Maint. (Intra-DOD)	Purchased Equip. Maint. (Commercial)	Printing and Reproduction	Other Purchased Services	A/C POL	Ship POL
	01	02	03	04	05	06	07	08	09	10	11	12	13	14
261														
262													X	
263														X
264														
265														
271												X		
272												X		
277														
278														
279														
280				X										
311														
312														
313														
320														
330														

Purchased Equip. Maint. (Commercial)	Printing and Reproduction	Other Purchased Services	A/C POL	Ship POL	Other Supplies	Equipment	Other Expenditures	Service Credits	DOD Elements of Expense / Army Elements of Expense
10	11	12	13	14	15	16	17	18	
					X				261 Supplies (Ex. POL and Medical)
			X						262 Aircraft POL
				X					263 Ship POL
					X				264 Other POL
					X				265 Medical Supplies
		X							271 Purchased Motor Pool Services (OMA)
		X							272 Purchased Motor Pool Services (MPA)
						X			277 R&U Equipment Rental
								X	278 Service Credits (OMA)
								X	279 Service Credits (MP)
									280 Contract Personnel, Indirect Hire, Foreign
									3XX Acquisition of Capital Assets
						X			311 Capital Equipment (Investment Items)
						X			312 Capital Equipment (Expense Items)
						X			313 Medical
							X		320 Lands and Structures - Acquired by Contract
							X		330 Investments and Loans

PRECEDING PAGE BLANK - NOT FILMED

DOD Elements of Expense (DOD 7220.20) / Army Elements of Expense (AR 37-100)	Mil. Personnel	Mil. Trainees	Mil. Unassigned	Civilian Personnel	Travel of Personnel	Transportation of Things	Utilities and Rents	Communications	Purchased Equip. Maint. (Intra-DOD)	Purchased Equip. Maint. (Commercial)	Printing and Reproduction	Other Purchased Services	A/C POL
	01	02	03	04	05	06	07	08	09	10	11	12	13
410													
420													
990													

PRECEDING PAGE BLANK - NOT FILMED

Purchased Equip. Maint. (Commercial)	Printing and Reproduction	Other Purchased Services	A/C POL	Ship POL	Other Supplies	Equipment	Other Expenditures	Service Credits	DOD Elements of Expense / Army Elements of Expense
10	11	12	13	14	15	16	17	18	
									4XX Grants and Fixed Charges
							X		410 Grants, Subsidies, and Contributions
							X		420 Insurance Claims and Indemnities
									9XX All Other
							X		990 General

APPENDIX C

AMS BASE OPERATIONS BUDGET PROJECT ACCOUNTS VERSUS OSD FUNCTIONAL CATEGORIES

AMS BPA's	OSD Functional Categories			
	9	10	11	12
9050	X			
9060		X		
9070			X	
9080				X

Note: There are minor exceptions to this translation:

(1) All RPMA performed for overseas dependents is classified as Functional Category 6.

(2) Property disposal activities are classified as Functional Category 4.

These exceptions can be accommodated in the operational IFS by computer programs that check for these conditions.

APPENDIX D

GLOSSARY

GLOSSARY

ADP	Automatic Data Processing
AIF	Army Industrial Fund
AMC	Army Materiel Command
AMS	Army Management Structure
AOB	Approved Operating Budget
AR	Army Regulation
ASOP	Army Strategic Objectives Plan
AS&R	Assets Storage and Retrieval
AWP	Annual Work Plan
BEMAR	Backlog of Essential Maintenance and Repair
BER	Budget Execution Review
BOB	Bureau of the Budget
BPA	Budget Project Account
BY	Budget Year
CAUO	Command Analysis of Utility Operations
CBE	Command Budget Estimate
COA	Comptroller of the Army
COB	Command Operating Budget
CONUS	Continental United States
CY	Current Year
DA	Department of the Army
DCSLOG	Deputy Chief of Staff for Logistics
DGM	Defense Guidance Memorandum
DOD	Department of Defense
DPM	Draft Presidential Memorandum
EDP	Electronic Data Processing
FHMA	Family Housing Management Account
FURR	Financed/Unfinanced Requirements Report
FY	Fiscal Year
FYDP	Five-Year Defense Program
GOCO	Government-Owned, Contractor-Operated
HQ DA	Headquarters, Department of the Army
IFS	Integrated Facilities System

IJO	Individual Job Order
JSOP	Joint Strategic Objectives Plan
LRWP	Long-Range Work Plan
MAFC	Major Army Field Command
MCA	Military Construction, Army
MFHA	Military Family Housing Account
MORP	Maintenance and Operation of Real Property
MPA	Military Personnel, Army
MPM	Major Program Memorandum
MSC	Major Subordinate Command
MTMTS	Military Traffic Management and Terminal Service
MYRR	Midyear Review Report
OAC	Operating Agency Commander
OCA	Office of the Comptroller of the Army
OCE	Office of the Chief of Engineers
OCSA	Office of the Chief of Staff, Army
OMA	Operation and Maintenance, Army
ORMO	Operating Resources Management Office
OSA	Office of the Secretary of the Army
OSD	Office of the Secretary of Defense
PBAC	Program Budget Advisory Committee
PBD	Program Budget Decision
PBG	Program Budget Guidance
PEMA	Procurement of Equipment and Missiles, Army
PPBER	Planning-Programming-Budgeting-Execution-Review
PRC	Planning Research Corporation
PRIME	Priority Management Effort
PY	Prior Year
PYPR	Prior-Year Performance Report
PYR	Prior-Year Report
R&D	Research and Development
RDTE	Research, Development, Test, and Evaluation
RMS	Resources Management System
RPMA	Real Property Maintenance Activities
RPMAO	Real Property Maintenance Activities Office

SAWP	Summary Annual Work Plan
SOO	Standing Operating Order
SPEEDEX	Systemwide Project for Electronic Equipment at Depots - Extended
TAABS	The Automated Army Budget System
TDR	Technical Data Report
TY	Target Year
URR	Unconstrained Requirements Report
USCONARC	United States Continental Army Command
WCC	Work Coordinating Center

Unclassified

Security Classification

DOCUMENT CONTROL DATA - R & D

(Security classification of title, body of abstract and indexing annotation must be entered when the overall report is classified)

1. ORIGINATING ACTIVITY *(Corporate author)*

Planning Research Corporation
1100 Glendon Avenue
Los Angeles, California 90024

2a. REPORT SECURITY CLASSIFICATION

Unclassified

2b. GROUP

NA

3. REPORT TITLE

RPMA Module Analysis for the Integrated Facilities System

4. DESCRIPTIVE NOTES *(Type of report and inclusive dates)*

Final Report. ~~(Part of a Series)~~

5. AUTHOR(S) *(First name, middle initial, last name)*

John Watson
Robert L. Anelli
John G. Cleveland
John W. Nocita
Robert K. Wood

6. REPORT DATE

Dec[redacted]69

7a. TOTAL NO. OF PAGES

144

7b. NO. OF REFS

5

8a. CONTRACT OR GRANT NO.

DAHC15-68-C-0404

8b. PROJECT NO.

9a. ORIGINATOR'S REPORT NUMBER(S)

~~R-1209, Vol II, Part 2~~

PR R-1209-Vol-Pt-2

9b. OTHER REPORT NO(S) *(Any other numbers that may be assigned this report)*

ASDIRS 2462
DLSIE 17052 D

10. DISTRIBUTION STATEMENT

This document may be further distributed by any holder only with specific prior approval of HQ DA, ATTN: DCSLOG/DI-IFSO

11. SUPPLEMENTARY NOTES

12. SPONSORING MILITARY ACTIVITY

Headquarters, Department of the Army
Deputy Chief of Staff for Logistics
Director of Installations
Washington, D. C. 20310

13. ABSTRACT

This report presents ways that the shortcomings identified in the Real Property Maintenance Activities (RPMA) Management Function Analysis may be corrected or significantly reduced. Concepts of procedures and techniques are outlined for developing a sound annual basis for determining RPMA requirements and a way to present such requirements so as to ensure consideration at the time Army basic annual budget decisions are being made. A rudimentary language of effect and impact is created through the introduction of condition terminology and by encouraging the Army's early exploitation of the full potential of RPMA Standards. (U)

14. KEY WORDS

Budgeting
Decision Making
Facilities
Facilities Management
Information Systems
Logistics Management
Logistics Operations
Logistics Planning
Logistics Readiness
Maintenance
Management Engineering
Management Planning
Management Systems
Military Facilities
Readiness
Requirements
Real Property
Systems Analysis

DD FORM 1 NOV 65 1473 REPLACES DD FORM 1473, 1 JAN 64, WHICH IS OBSOLETE FOR ARMY USE.

Unclassified

Security Classification