UNCLASSIFIED

AD NUMBER

AD867617

NEW LIMITATION CHANGE

TO

Approved for public release, distribution unlimited

FROM

Distribution: Further dissemination only as directed by Controlling DoD Organization.. Air Force Aero Propulsion Laboratory, Attn: AFSC, Wright-Patterson AFB, OH 45433, 31 DEC 1969, or higher DoD authority.

AUTHORITY

AFAPL ltr, 12 Apr 1972

THIS PAGE IS UNCLASSIFIED

Expandable Airlock Experiment (D021)

AD 867617
DDC FILE COPY

QUARTERLY PROGRESS REPORT No. 9, 10, 11

1 Nov - 31 Dec 69.

GER-13124-24

CDRL B-021

95 p.

CONTRACT F33615-67-C-1380

BPSN ~~7(63-817004-62405214)~~

Prepared by

GOODYEAR AEROSPACE CORPORATION

AKRON, OHIO

This document may be released to foreign nationals only with specific prior approval of the AFAPL.

for AIR FORCE AERO PROPULSION LABORATORY (AFAPL)
DIRECTORATE OF LABORATORIES (DOL)
AIR FORCE SYSTEMS COMMAND (AFSC)
WRIGHT PATTERSON AFB, OHIO

1 JANUARY 1970

DDC

Statement #5 per Lt Silverman

Controlling Office: AFAPL (APO-1)
W-PAFB, Ohio 45433

R Newsom
4-17-70

ACCESSION for
CFSTI WHITE SECTION
DDC BUFF SECTION
UNANNOUNCED
JUSTIFICATION
BY
DISTRIBUTION/AVAILABILITY CODES
DIST. AVAIL. and/or SPECIAL
5

TABLE OF CONTENTS

Section	Title	Page
I	INTRODUCTION	1
II	SUMMARY	3
III	WORK ACCOMPLISHED DURING THIS REPORTING PERIOD	5
	(1) Hardware Design	5
	(2) Analytics	5
	(3) Fabrication	6
	(4) Reliability	7
	(5) Quality Assurance	7
	(6) Testing	7
	(7) Documentation, AWL	8
	(8) Trips and Meetings	8
IV	ANTICIPATED WORK	10
V	PROBLEM AREAS	11
VI	MANAGEMENT	11
	A. Man Hours	11
	B. Personnel Changes	11

Appendix

A	Conference Minutes D021/D024 Experiments Coordination Conference 28/29 October 1969	A-1
B	SP-7099 Dated 23 September 1969, D-21 Airlock Experiment Vacuum Chamber Deployment Failure Analysis Report	B-1
C	Weight Analysis	C-1
D	D021 Airlock Vacuum Chamber Low Temperature Deployment Test	D-1

LIST OF TABLES

Table	Title	Page
I	Man Hour Expenditures	12-13

REF. ENGINEERING PROCEDURE S-017
B-ID-15(7-61)(77-10)

SECTION I

INTRODUCTION

Under USAF Contract F33615-67-C-1380, Goodyear Aerospace Corporation (GAC) is developing the "Expandable Airlock Experiment (D021)" to be utilized aboard the SIVB Orbital Workshop (OWS). Since July of this year, NASA has initiated several radical changes to the entire payload. The OWS has been changed from a "WET" stage to a "DRY" stage SIVB configuration, and the Apollo Telescope Mount (ATM) has been added to the cluster. The booster has been changed from the S-1B to the Saturn V.

This has resulted in a significant impact on the D-21 launch and orbital environments requiring both an analytical review of the design suitability to meet these new environments as well as incorporation of some hardware modifications. This work was started subsequent to the coordination meeting held October 28 and 29, 1970, (see Appendix A - Minutes of Conference), and is nearing completion. Upon modification of the hardware, the crew training unit will be delivered to Marshall Space Flight Center (MSFC) for Crew Systems Review, and the Test Unit will be returned to AEDC, Tullahoma, Tennessee, for continuation of the Environmental Qualification Tests (EQT). The Flight and Backup Units will be updated after completion of the EQT.

REF: ENGINEERING PROCEDURE S-017
E-ID-15(7-66)(77-10)

This document is to be considered the 9th, 10th, and 11th Quarterly Progress report and covers the period from 1 April 1969, through 31 December 1969. (Also in accord with agreements made at the conference, the D024 experiment progress will be included in the D021 reports.)

B-ID-15(7-64)(7-10)
REF: ENGINEERING PROCEDURE S-017

SECTION II

SUMMARY

After taking the corrective action described in the previous quarterly report, the Instrumentation Box Assembly, P/N 66QS1502, successfully passed the 10-day humidity chamber test and was reinstalled in the Qualification Test Unit (QTU). The QTU was then taken to AEDC for further testing.

The QTU was subjected to the launch ambient pressure change with no damage to the airlock.

During the next test which demonstrated airlock deployment under combined low temperature and vacuum conditions, some damage was incurred by the expandable structure. The unit was returned to GAC for evaluation.

The word was received at about this time that the Orbital Workshop was to undergo significant configuration changes. Effort on the airlock program was then reduced to investigation of the failure until after the October 28, 29 coordination meeting.

Appendix B presents the subsequent failure analysis and corrective action. As part of the investigative action, the Crew Training Unit (CTU) was returned to GAC and successfully deployed at room temperature and vacuum conditions to evaluate the effect of long-term storage in the packaged state.

A transient thermal analysis of the airlock was performed and indicated that a thermal blanket would be required to maintain the expandable structure temperature above -20°F limitation until after deployment. The analysis

B-10-15(7-68)(77-10)
REF: ENGINEERING PROCEDURE S.017

was subsequently modified to include the effects of the new cluster configuration.

This thermal blanket was incorporated on the CTU and the pressurization system was revised to include a preshaping cycle. The CTU was then successfully deployed under combined low temperature and vacuum environment as reported in Appendix C.

The expandable structure portion of the CTU is being exchanged for damaged structure currently on the QTU. Upon completion, the unit will be returned to AEDC for continuation of qualification testing.

The damaged expandable structure will be repaired and delivered as part of the CTU.

REF: ENGINEERING PROCEDURE S-017
B-10-15(7-64)(77-10)

SECTION III

WORK ACCOMPLISHED DURING THIS REPORTING PERIOD

1. Hardware Design

All hardware design has been completed for the basic D-21 Airlock configuration, for the AGE, and for the D-24 Materials Experiment. However, a number of modifications are under consideration as a result of the NASA change to the cluster configuration and the launch vehicle. These changes will be engineered and released upon confirmation of the added design requirement.

2. Analytics

(a) Structural Analysis. Structural analysis has been completed but will be supplied as necessary to support the added design effort.

(b) Thermal Analysis. A preliminary thermal analysis has been performed by computer to determine the orbital airlock temperatures to be expected in the new configuration. This will be further refined upon final definition of the exact configuration.

(c) Weights Analysis. The current experiment weights listed in the DEP GER-13036 Rev. B are as follows:

Equipment Item	Weight Lbs
D021 Airlock Package	203.0
D021 Material Samples (2)	.33
D024 Material Samples and Frames (2)	1.20
*D021 and D024 Material Sample Returner Container (1)	3.00

*Note - Weight was listed for one container only but it is now apparent that two containers will be launched on the AAP-2 flight.

E-ID-15(7-64)(77-10)
REF: ENGINEERING PROCEDURE S-017

1. The new weight allowances desired are listed below. (These increases are explained and justified in Appendix C.

Equipment Item	Weight Lbs
D021 Airlock Package	209.7
D021 Material Samples (2)	0.3
D021 and D024 Sample Containers (2)	9.0
D024 Samples and Frames (2)	1.2
Total	220.2

3. Fabrication

The qualification training unit had been completed and sent to AEDC for testing. It was returned to GAC for failure analysis and corrective action after the low temperature vacuum chamber deployment test (see Appendix B).

The unit is being prepared for repair and continuation of the environmental qualification test program.

The crew training unit had been delivered to AFAPL, but return to GAC was requested for investigation of the effects of long-term packaging on the deployment sequence. Testing has been completed and the unit will be redelivered no later than 2 March 1970, after incorporation of changes to make it representative of flight hardware configurations.

Flight and backup hardware units will remain in storage in the partially assembled state until the scheduled refurbishment period two months prior to delivery.

E-ID-15(7-64)(77-10)
REF: ENGINEERING PROCEDURE S-017

4. Reliability

Reliability efforts have been completed except for occasional consultations as needed.

5. Quality Assurance

Quality assurance work is continuing on a level proportionate to the limited fabrication effort.

6. Testing

The Environmental Qualification Test was temporarily suspended pending analysis of an unsatisfactory deployment at low temperature and vacuum conditions. Results of the subsequent engineering investigation are presented in Appendix B.

The crew training unit was returned to GAC to investigate whether long term storage in the packaged condition may have been a contributing factor to the unsatisfactory deployment of the qualification test unit. A successful deployment of the crew training unit in the altitude chamber at GAC eliminated this concern. Results of this test are also covered in Appendix B.

The design changes which seemed advisable as a result of the failure investigation were incorporated on the crew training unit; i.e., the addition of a super insulating thermal blanket and the incorporation of a low flow, low capacity, pre-shaping pressure bottle for initial deployment. The unit was then successfully deployed under combined low temperature and vacuum environments. These results are presented in Appendix D.

S-ID-15(7-64)(T-10)
REF: ENGINEERING PROCEDURE S.017

It is planned to continue the qualification test program upon acceptance of the failure analysis and approval of the remedial action.

D024 Material Return Container test instructions have been issued and will be initiated upon completion of hardware.

7. Documentation

The following reports were issued:

CDRL No.	GAC No.	Title	Date
B-021	GER 13124-23	Expandable Airlock Experiment (D-21) Quarterly Progress Report	1 April 1969
B-002	GER 13137-23	Milestone Status Report	1 April 1969
* B-004	GER 13036 Rev B	Definitive Experiment Plan	18 Feb. 1969

* This revised issue of the DEP was issued in the first half of 1969 under the assumption that it would reflect the final status of the hardware design. Since July 1969, the events have indicated the need for further revision and it is planned to again revise the document to be in agreement with the latest MSFC's Experiment Requirements Document.

8. Trips and Meetings

The following meetings were attended during this reporting period.

Facility and Location	Purpose	Date
Arnold Engineering and Development Center Tullahoma, Tenn.	Environmental Qualification Test Discussion (Test Unit Delivered)	5/26/69

(Continued)

S-10-15(T-64)(77-10)
REF: ENGINEERING PROCEDURE S-017

8. Trips and Meetings (Continued)

Facility and Location	Purpose	Date
McDonnell Douglas Astronautics Co. (MDAC) St. Louis, Mo.	D021 Experiment Interface Integration Meeting	6/26/69
MOL Houston Field Office Houston, Texas	Review of Deployment Test Results	7/29/69
Marshall Space Flight Center - Huntsville, Alabama	"DRY WORKSHOP" Advance Planning	7/30/69
MDAC St. Louis, Mo.	D021, D024 Experiment Integration Meeting	10/27 & 10/28/69

E-ID-15(7-64)(77-10)
REF: ENGINEERING PROCEDURE S-017

SECTION IV

ANTICIPATED WORK

The following modifications to the airlock design are expected to be incorporated on four units.

1. Addition of a super insulation thermal blanket to cover the expandable structure in the packaged configuration.
2. Modify the pressurization system to include a low flow limited capacity preshaping cycle for initial deployment.

The following changes to the D024 material experiment are anticipated as a result of recommendations made at the most recent Interface Integration Meeting.

1. Addition of an attachment fitting to the materials return container in accord with MDAC's mounting provisions.
2. Addition of a handle to the materials return container suitable for attachment to the astronauts tether.
3. Replacement of current flight sample attachments using Velcro strips with metallic snap fasteners.

Upon modification of the Qualification Test hardware with the above changes, the Environmental Qualification Test Program will be continued.

S-ID-15(7-66)(77-10)
REF: ENGINEERING PROCEDURE S.017

SECTION V

PROBLEM AREAS

With the apparent resolution of the deployment system difficulties, there are no other problems visible at this time.

SECTION VI

MANAGEMENT

A. Man Hours

Table I shows the man hours expended through December 31, 1969, on this program.

B. Personnel Changes

None.

S-ID-15(7-66)(77-10)
REF: ENGINEERING PROCEDURE S.017

TABLE I - Man Hour Expenditures

Hours	1967 MONTH ENDING									
	Jan 15	Feb 15	Mar 15	Apr 15	May 31	Jun 30	Jul 31	Aug 31	Sep 30	Oct 31
Hours this month.	2,259	4,268	4,489	3,536	7,579	2,630	1,466	4,151	4,195	5,203
Total hours expended	2,259	6,527	11,016	14,552	22,131	24,761	26,277	30,428	34,623	40,426
% Total	5.4	15.6	26.5	*32.0 ~~35.2~~	* 48.5 ~~52.8~~	* 54.2 ~~60~~	* 57.6 ~~63.4~~	* 66.7 ~~73.4~~	* 76.0 ~~83.6~~	* 88.6 ~~97.6~~

Hours	1968 MONTH ENDING									
	Nov 30	Dec 31	Jan 31	Feb 29	Mar 31	Apr 30	May 31	Jun 30	Jul 30	Aug 30
Hours this month.	4,804	3,844	3,667	1,525	295	300	499	1,475	1,471	1,446
Total hours expended.	45,230	49,074	52,741	54,272	54,568	54,868	55,367	56,841	58,312	59,758
% Total	* 99.2 ~~109.2~~	107.6	115.6	119.0	** 87.4 ~~119.6~~	87.7 ~~120.5~~	88.5 ~~122.4~~	90.9 ~~124.6~~	93.3	95.6

* Above percentage reflects additional hours allocated by Contract Amendment SA/P005 effective April 1967, thru 29 February 1968.

** Percentages revised to reflect Contract Amendment P006 and anticipated program revision.

TABLE I - Man Hour Expenditures
(continued)

Hours	MONTH ENDING									
	Sep 30	Oct 31	Nov 30	Dec 31	1969 Jan 31	Feb 28	Mar 31	Apr 30	May 31	Jun 30
Hours this month.	1,291	1,323	877	631	860	872	500	563	670	213
Total hours expended.	61,041	62,373	63,249	63,880	64,740	65,612	66,112	66,675	67,345	67,558
% Total	97.8	99.4	101	102.3	108.6	105.0	105.8	106.7	107.8	108.1

	MONTH ENDING									
	1969 Jul 31	Aug 31	Sep 30	Oct 31	Nov 30	Dec 31				
Hours this month.	60	9	4	38	14	22				
Total hours expended.	67,618	67,627	67,681	67,669	67,683	67,705				
% Total	108.2	108.3	108.2	108.3	108.3	108.3				

APPENDIX A

CONFERENCE MINUTES

D021/D024 EXPERIMENTS

COORDINATION CONFERENCE

28/29 OCTOBER 1969

E-ID-15(7-60)(77-10)
REF: ENGINEERING PROCEDURE S.017

MCDONNELL AIRCRAFT CORPORATION
BOX 516, ST. LOUIS, MISSOURI 63166

TRANSMITTAL MEMO
TECHNICAL DATA ONLY

NO. 646-11-11-69

SHEET 1 OF 2

DATE 11 November 1969

TO:
(2 copies)

National Aeronautics and Space Admin.
George C. Marshall Space Flight Center
Marshall Space Flight Center, Ala. 35812
Attn: F. M. Drummond, PM/AA

MODEL 1003	JOB ORDER NO. 646
CONTRACT NO. NAS 9-6555	
CONTRACT CALL NO.	
PURCHASE REQUEST	PURCHASE ORDER NO
EFFECTIVITY	

REF: NASA Resident Office Memo PM-AA-RS-71-69, 24 October 1969

ACTION THE FOLLOWING ITEMS ARE TRANSMITTED FOR (CHECK ONE)

[ ] SUBMITTAL TO CUSTOMER PLEASE ADVISE OF CUSTOMER'S DISPOSITION OF DATA.
[ ] RETURN TO VENDOR WITH CHANGE. PLEASE REQUEST CORRECTED PRINTS.
[X] INFORMATION
[ ] APPROVAL
[ ] SEE REMARKS
[ ] RETURN TO VENDOR WITHOUT CHANGE.
[ ] OTHER

ITEM NO.	QTY.	IDENTIFICATION NO.	REV.	DESCRIPTION	REMARKS
1	2			Experiment Coordination Meeting, D021 & D024 (9 pages Minutes - 31 pages Figures)	

CC: NASA/MSFC, Alabama, Attn: B. Jones, PM-CO-PW (w/Item 1)
NASA/MSFC, Alabama, Attn: W. Nichols, PM-CO-PW (w/Item 1)
NASA Resident Manager's Office, Attn: H. H. Stevenson (w/2 copies Item 1)

CC: NASA/MSFC, Alabama, Attn:

* A. W. Bearskin, S&E-ASTN-SDI
* J. M. Price, PM-AA
* E. O. Walker, PM-AA

NASA, MSC, Experiment Field Office, Houston, Texas

* Lt. N. S. Cason, USAF

Goodyear Aerospace Corp. (GAC)

* L. Manning, D021, D024 Project Engineer
* R. Hose, D021 Electrical Systems

* w/Item 1

(cc Addressees Continued on Page 2)

TRANSMITTED BY: L. E. Schultz
SIGNATURE
DEPT. E451 BLDG 106 DATE 11 Nov. 1969

SIGNED RECEIPT REQUESTED: [X] YES [ ] NO
RETURN TO SENDER.
SIGNATURE DATE

A-2

TRANSMITTAL MEMO

No. 646-11-11-69

Sheet 2 of 2

Date 11 November 1969

CC: Martin Marietta Corp. (MMC), Attn:

* R. Danner, D021 Experiment Analyst
* G. E. Stevenson, D024 Experiment Analyst
* R. Doughty, Integration Test

CC:
* D. L. Boatman, MDAC/Houston
* D. A. DeFreece, MDAC-ED/Huntsville
* W. J. Edwards
* R. P. Gillooly
* L. A. Goran
* H. F. Imster
* R. M. Jacobs, MDAC/Huntington Beach
* E. C. Lundergan
* P. A. Lutz/Cape Kennedy
* F. G. Morgan, MDAC/Houston
* S. M. Redelsheimer
* R. W. Saffley
* F. J. Smith
* R. H. Summerl, MDAC/Huntington Beach

* W/Item 1

R. W. Saffley
Operations & Control

F. J. Smith
Engineering Manager
Airlock

W. E. Thorne
Contract Administration
Airlock

~~TELECON~~ CONFERENCE REPORT
(CROSS OUT ONE)

~~XXXXXXXX~~ CONF. DATE: 28/29 October 1969

SUBJECT: (PROJECT, MODEL, COMPONENT, ETC.)

Experiments D021/D024 Coordination Meeting

ORIGINATOR OF TELECON	PLACE OF CONFERENCE

MDC PARTICIPANTS	OTHER PARTICIPANTS
See Page 2	See Page 2

DISCUSSION: (DETAILS, INFO. OBTAINED, CONCLUSIONS, ETC.)

1. Although the major purpose of the meeting was to discuss status of the AM experiment ICD's, it was felt that a general coordination meeting was in order, since (a) some of the action items initiated during the July meeting had not been satisfied, (b) comments from MDAC-ED on the D021 EIRD could be applied to its replacement document (Experiment Requirements Document - ERD), and (c) MDAC-ED had been requested by MSFC to give a short briefing relating to impact of the wet to dry workshop on the AM program. With this in mind, the meeting was based on the agenda items presented in Figure (1).

ACTION REQUIRED: (BY WHOM AND WHEN)

PREPARED BY: L. E. Schultz

DATE: 11 November 1969

DISTRIBUTION: W. T. Boman, R. T. Brill, L. D. Calhoun, E. T. Carmody, C. R. Carter, C. R. Chubb, R. A. Garrett, J. E. Hallemann, H. F. Imster, B. E. Keith, J. E. Lovelace, H. J. Musing, D. R. Rebert, F. J. Sanders, M. L. Scheer, R. L. Sharp, F. J. Smith, E. A. Thompson, R. M. Schwarz, MDAC-ED Attendees.

MCDONNELL DOUGLAS

LIST OF ATTENDEES

MSFC	Participation
A. W. Bearskin, Payload Integration, S&E-ASTN-SDI	Full Time
J. M. Price, PM-AA-AL	Full Time
NASA Resident Office	
E. L. Mabie, Airlock Coordination, PM-AA-AL	Full Time
MSC, MOL Field Office, USAF	
Lt. N. S. Cason	Full Time
Goodyear Aerospace Corporation (GAC)	
R. Hose, D021 Electrical Systems	Full Time
L. Manning, D021 Project Engineer	Full Time
Martin Marietta Corporation (MMC)	
R. Danner, D021 Experiment Analyst	Full Time
G. E. Stevenson, D024 Experiment Analyst	Full Time
R. Doughty, Integration Test	Part Time
MDAC-ED	
G. F. Bell, Crew Station Integration	Part Time
W. M. Deriscavage, Electrical Design	Part Time
T. E. Emmons, Electrical Design	Part Time
F. J. Fairbanks, GSO Electrical	Part Time
W. Gamble, Structural Design	Part Time
G. Gildehaus, Experiment Integration	Part Time
P. Hayek, GSO Fluids	Part Time
J. R. Lauchli, AM Interface	Full Time
R. M. Lawton, Electronics - EMI	Part Time
W. B. Lyttle, AM Interface	Full Time
E. B. Robb, Structural Design	Part Time
J. L. Roberts, Electrical Interface Coordination	Part Time
D. L. Schindler, Engineering Contract Services	Part Time
L. E. Schultz, Experiment Coordination	Full Time
B. Sorkin, GSE	Part Time
H. D. Tripp, Engineering Contract Services	Part Time

• IMPACT OF WET TO DRY WORKSHOP

2. Figures (2) through (12) were used to discuss the impact of the wet to dry workshop on the AM. The 1/10th scale model AM was used to supplement the figures and assist in visualizing the ATM-DA and the orientation of the D021 experiment. The writer cautioned all attendees that the ATM-DA design might be revised and that the figures are, therefore, representative. In addition, a discussion of the mounting orientation of D021 as presented in Figure (12) was included. Design considerations and alternative mounting locations of the experiment were also discussed (based on Figures (13) through (24)) to emphasize reasons for the choice presented in Figure (12) and to show why the D021/D024 sample-return panels would not be exposed to sunlight if attached to the base of D021.

Experiment D022 remains in the figures since the formal cancellation notice had not been received by either MSFC or MDAC-ED by the date of the meeting.

Attendees were given a short tour of the AM trainer to further emphasize structural relationships.

• PRELIMINARY MECHANICAL & ELECTRICAL ICD'S

3. Preliminary ICD's for D021 and D024 were distributed at the meeting for a page by page review of content. All ICD's were returned to MDAC-ED at the conclusion.

4. The preliminary mechanical ICD for D021, (13M12011), was reviewed, and the comments are listed as follows:

4.1 Paragraph 1.1 of the ICD is directed to the mechanical interface requirements between the AM and the D021. The EIRD for D021 was referenced as the document to specify the experiment, but since the EIRD's are not to be used in the future, the definition document will either be the new ERD (when approved) or the Definitive Experiment Plan (DEP) from GAC.

Action: MSFC (J. Price, PM-AA) to determine which, if any, of these documents should be referenced and to discuss with MDAC-ED prior to the ICD rough draft due date of 1 Dec. 1969.

4.2 The experiment ICD's will be available as follows:

Rough Draft for MSFC - 1 Dec. 1969
Update - Feb. 1970
Update - April 1970

4.3 Paragraph 2.0, on Applicable Documents, lists reports and specifications, some of which are not in general distribution to all contractors.

Action: MDAC-ED to keep the list to a minimum and include only those documents in general distribution to all contractors. Any information needed from other reports shall be written into the ICD, thereby precluding the imposition of requirements on those contractors that are not distributed all documents.

4.4 MSFC requested that MDAC-ED include the Cluster Specification in the list of applicable documents. MDAC-ED informed MSFC that this could not be done since the document has not been contractually imposed on us to date.

4.5 Paragraph 3.1.1 of the ICD.

Action: MDAC-ED to include external lighting requirements on Figure 3.1-1, AM/D021 Experiment Mechanical Interface Configuration drawing.

4.6 Paragraph 3.1.1.2 of the ICD.

Action: MDAC-ED to include both packaged and deployed experiment configuration and loads in Table 3.1-1.

4.7 Paragraph 3.1.1.2.1 of the ICD.

Action: MDAC-ED to include on the interface drawing of Figure 3.1-1 the AM coordinates of the packaged and deployed experiment center of gravity.

4.8 Paragraph 3.1.1.4.1 of the ICD refers to the experiment controls and displays shown in Figure 3.1-2 and which are located on the AM Control Panel of the STS. To date, the Deployment Harness Release action is followed by a pre-shaping and Proof Pressure Leak Test of 5 psi. GAC has found that .3 psi for pre-shaping, followed by an additional 3.5 psi for Pressure Leak Testing, is sufficient. Therefore, an additional switch for .3 psi pressurization is required. The 5 psi pressurization switch would be designated 3.5 psi and the remaining 3.5 psi pressurization switch for the Working Pressure subsequent to EVA would remain unchanged.

Action: MSFC to send MDAC-ED a go-ahead to rework the Control Panel and associated AM wiring.

Action: GAC to send MDAC-ED, via MSFC, drawings of revised electrical and pneumatic circuitry.

Action: MDAC-ED to add functions and definitions of switches and lights to Paragraph 3.1.1.4.1.

4.9 Paragraphs 3.1.2 and 3.1.3 should be deleted from this ICD since GSE equipment interfaces will appear in other GSE documents.

Action: GAC to send MDAC-ED, via MSFC approval, drawings and orientation of the experiment hoist points and hoist point loads.

Action: MDAC-ED to incorporate hoist points on the Mechanical Interface Configuration drawing of Figure 3.1-1.

Action: MDAC-ED to include in Figure 3.1-1 the port for charging the experiment gas bottles prior to launch. Orientation of the experiment shall be such that the fittings for servicing the experiment gas bottles in the VAB are accessible.

4.10 MDAC-ED stated in Paragraph 3.2 of the ICD that the only environments presented will be directed to the experiment.

Action: MSFC to send MDAC-ED an updated table of environments which is planned for the Cluster Specification.

4.11 Paragraph 3.2.1 of the ICD.

Action: Instead of MDAC-ED requiring a pyrotechnic shock spectrum from NASA, the paragraph will be rewritten to state that ignition of the pyrotechnic devices shall not affect the AM.

Action: MDAC-ED to place above information in Section 3.4 Safety.

4.12 Paragraph 3.2.2 of the ICD.

Action: MDAC-ED to include in the paragraph not only cleanliness of the AM and the D021 installed on the AM, but also cleanliness requirements during and prior to PIA, verification, and installation. The D021 should be received by MDAC-ED in a condition that is cleanable to Class 10, in order to make use of test equipment available in the MDAC-ED Clean Room.

Action: MDAC-ED to place above information in Section 3.4 Safety.

Action: GAC to provide MDAC-ED with information pertaining to the effect of MDAC-ED Process Specifications 20500 and 20501 on GAC D021 cleanliness.

4.13 As presently written, Paragraph 3.3 of the ICD does not describe the thermal interface. The following action must be taken:

Action: MDAC-ED to provide GAC, via MSFC, with the mounting location and shadowing information for D021.

Action: GAC to determine thermal properties of the D021 materials and coatings to be used, and provide this information to MDAC-ED.

Action: MDAC-ED Thermodynamics Dept. to use above properties for a determination of the D021/AM thermal interface.

Action: MSFC, GAC and MDAC-ED to meet on or about 15 Dec. to discuss analysis results. MDAC-ED will rewrite Paragraph 3.3 of the ICD to reflect results.

4.14 Paragraph 3.4.1 of the ICD is directed to the installation of the pyrotechnic devices and responsibility for range safety. The writer stated that all work associated with range safety should be initiated now, and presented Figure (25) in the handouts to show how the AM could be affected by the pyrotechnic category designation. The following action must be taken:

Action: MSFC to determine category of pyros with the Range Safety Office at KSC and inform MDAC-ED as soon as possible.

4.15 Delete Paragraph 3.4.2 of the ICD on non-metallic materials.

4.16 Change the title of Paragraph 4.0 in the ICD from Tests to Interface Verification Testing.

4.17 Delete Paragraphs 4.1 Interface Requirements Checks and 4.2 Assembly Verification Checks since this information will be accounted for in MDAC-ED Report E914, Airlock Acceptance Test Plan and appropriate SEIR's.

Action: MDAC-ED to add this sentence in 4.0:
"Interface Verification Testing will be conducted during SST."

Action: MDAC-ED to change Table 4.1-1 to read:
"Interface Requirements-Testing and Verification Criteria" and Table 4.2-1 to read:
"Assembly Verification Checks-Testing and Verification Criteria."

4.18 General action items associated with the mechanical ICD.

Action: GAC to provide MDAC-ED, via MSFC, with the number callouts of any special high pressure fittings required for compatibility of servicing and testing hardware. MDAC-ED to incorporate these callouts in the mechanical ICD. (GAC will supply fittings as necessary, if other than AN flared tube types are required).

Action: GAC to forward copies of their updated Engineering Test Instructions and High Pressure System Drawings to MDAC-ED with MSFC cognizance. The information will be used by GSO.

5. The preliminary electrical ICD for D021, (40M35613), was reviewed, and the comments are listed as follows:

5.1 Paragraphs 4.1 through 4.4 of these minutes also apply to the electrical ICD.

5.2 The experiments power profile is referred to in Paragraph 3.1.1 of the ICD and is presented in Table 3.1-1. It was stated that a typical experiment mission load profile in graphic form would be more practical than a tabular form, because (a) it can be added to the overall mission load profile for power budgeting studies and (b) it presents at a glance a more useful form of reference.

Action: MDAC-ED to replace Table 3.1-1 by an experiment load profile for a typical mission.

5.3 Paragraph 3.1.1.1.2 in the ICD.

Action: GAC to review their D021 SOW for compatibility with the AM regulator output characteristics. Any incompatibilities are to be reported.

5.4 Paragraphs 3.1.1.1.2, .3, .4, and .5 of the ICD contain data which is not relevant to the document.

Action: MDAC to delete information not related to the AM/D021 interface.

5.5 Paragraph 3.1.1.2.3, on electrical grounding of equipment, must be adhered to.

Action: GAC to inform MDAC-ED of the electrical specifications used for the experiment design. These will be compared for compatibility of experiment grounding requirements with AM grounding requirements.

5.6 Paragraph 3.1.1.2.3.4 of the ICD.

Action: MDAC-ED to delete Table 3.1-II, Signal Levels.

5.7 Paragraph 3.1.2 Electrical Connectors.

Action: MDAC-ED to revise Figure 3.1-1, Electrical Interface - AM/D021, by removing from it internal wiring of D021 and AM circuitry.

Action: MDAC-ED to make minor corrections to Table 3.1-III, Connector Identification and Function Interface.*

* The format will be changed to agree with that used by MSFC during previous programs.

5.8 Paragraphs 3.1.5 and 3.1.6 of the ICD, on GSE and Facilities, should be deleted since experiment interfaces with these areas should appear in other documents.

5.9 Paragraphs 4.0, 4.1 and 4.2 on interface verification testing will be revised as described in Paragraphs 4.16 and 4.17 of these minutes.

5.10 General action items associated with the electrical ICD.

Action: MSFC, GAC and MDAC-ED to discuss wiring of the arming relay to obtain a position signal for both Safe and Arm positions.

Action: MSFC, GAC and MDAC-ED to participate in discussions on redundancy requirements for vent valve motor, harness release motor, instrumentation wiring, and connector redundancy in the floodlight circuits.

Action: GAC to forward the harness release motor and vent valve release motor specifications to MDAC-ED.

- STATUS REVIEW OF PREVIOUS ACTION ITEMS

6. Figure (26) was presented to facilitate discussion of the status of action items evolved from the previous experiment coordination meeting (10/11 July 1969). The following statements will relate to only those action items about which additional information is available.

6.1 Item 1: Evaluate for Dry Workshop configuration and relocation of D021 on the ATM-DA.

6.2 Items 2, 3 and 4: Evaluate for the Dry Workshop configuration.

6.3 Item 5: McCandless wants foot restraints instead of additional handhold loops. Evaluate for Dry Workshop configuration.

6.4 Item 6: GAC is looking into the possibility of a diagonal attach strip to hold the sample panels against the velcro. MDAC-ED will supply velcro for the support structure and GAC will supply velcro for the panels.

6.5 Item 7: MSFC will supply GAC with information necessary to attach the sample return container to the pressure suit. GAC will add a handle to the sample return container.

6.6 Item 11: GAC will forward to MDAC-ED the D021 Progress Report which contains the battery temperature limits.

6.7 Item 12: MSFC will evaluate MDAC-ED proposed cluster access through the PS and relate to D021 access.

6.8 Item 13: MSFC will discuss pyrotechnic category with Range Safety.

6.9 Item 14: The 5V power supply ground of D021 is isolated from bus ground.

6.10 Item 16: GAC to forward hoist points and hoist point design loads on D021 to MDAC-ED.

• COMMENTS ON D021 EIRD

7. Although it was known that the EIRD's would not be updated and would be replaced by ERD's, MDAC-ED felt that the list of comments to the D021 EIRD forwarded to MSFC would be useful in writing the ERD. MSFC and MMC confirmed. In addition, MMC distributed several copies of the preliminary D021 and D024 ERD's for review.

Action: MDAC-ED groups will review the ERD's relative to EIRD comments and forward suggestions to MMC via MSFC.

Figures (25), (27) and (28), covering Range Safety requirements, N_2 servicing, and experiment cleanliness were presented to MSFC and MMC as an assist in writing the ERD's.

8. Miscellaneous Items

8.1 Action: MDAC-ED to compile a list of comments on the D021 Definitive Experiment Plan and forward as soon as possible to GAC through MSFC for document update.

8.2 The meeting was adjourned at 3:45 PM, 29 October 1969.

EXPERIMENTS D021 & D024 COORDINATION MEETING
AGENDA ITEMS

- IMPACT OF WET TO DRY WORKSHOP
- DISCUSS PRELIMINARY MECHANICAL & ELECTRICAL ICD'S FORM & CONTENT
- STATUS REVIEW OF PREVIOUS ACTION ITEMS
- DISCUSS COMMENTS TO D021 EIRD

Figure (1)

REASONS - WET WORKSHOP TO DRY WORKSHOP

- SATURN V LAUNCH VEHICLE HAS PAYLOAD CAPABILITY TO LAUNCH A COMPLETELY OUTFITTED S-IVB WORKSHOP, AIRLOCK MODULE, MULTIPLE DOCKING ADAPTER, AND APOLLO TELESCOPE MOUNT (ATM).
- MAJOR CREW AND EQUIPMENT TRANSFER PROCEDURES ELIMINATED AND HABITATION SIMPLIFIED.
- LUNAR MODULE NOT REQUIRED SINCE THE ATM IS PART OF THE CLUSTER LAUNCHED BY SATURN V.

Figure (2).

NOTES:

"WET" TO "DRY" SATURN WORKSHOP CONVERSION

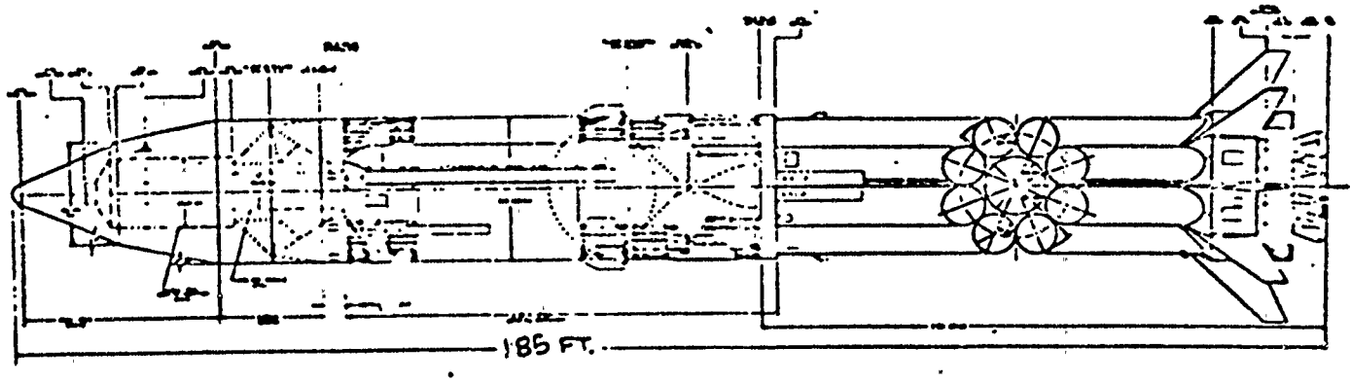

SATURN IB WORKSHOP

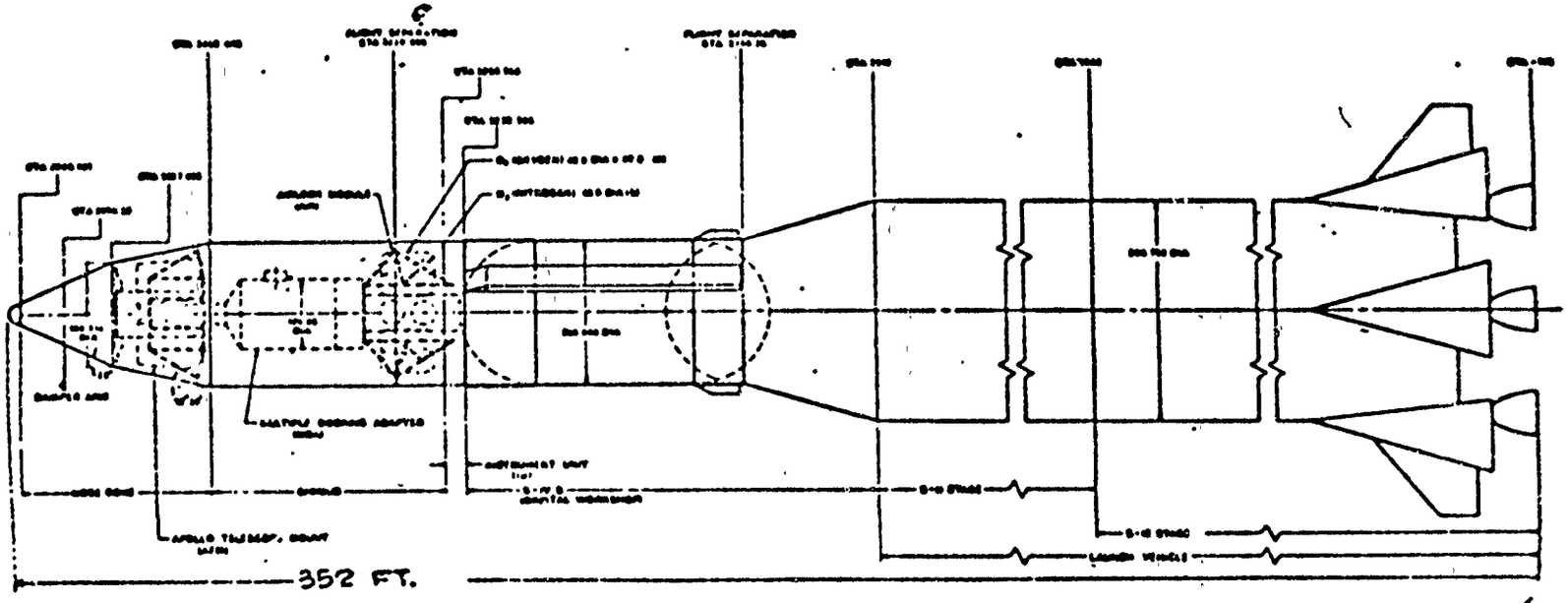

SATURN V WORKSHOP

MCDONNELL DOUGLAS

Figure (3)

ATM DEPLOYMENT ASSY - GENERAL ARRANGEMENT

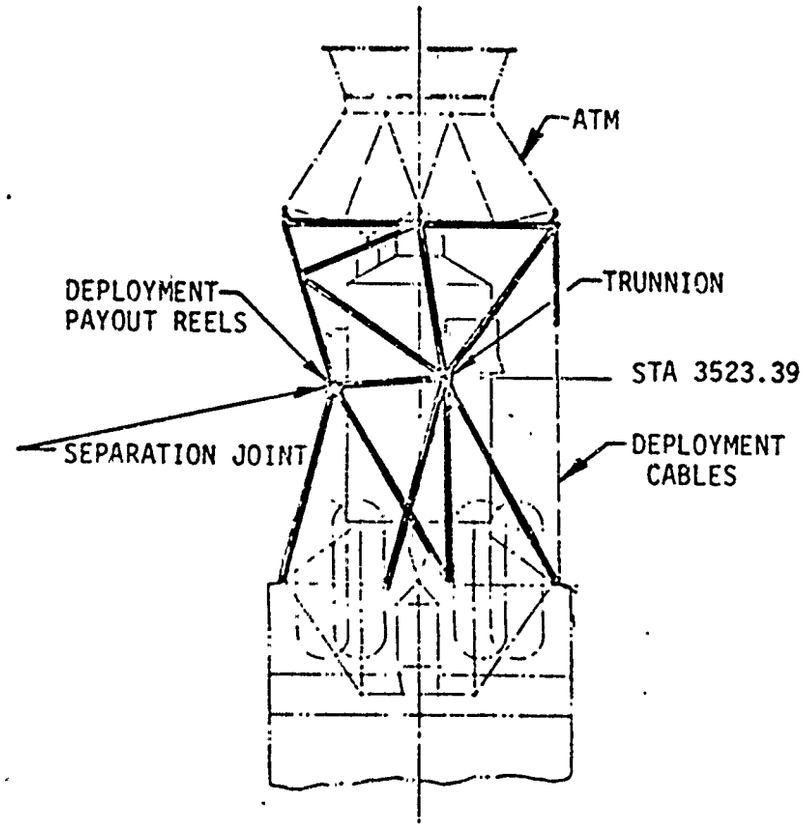

LAUNCH CONFIGURATION

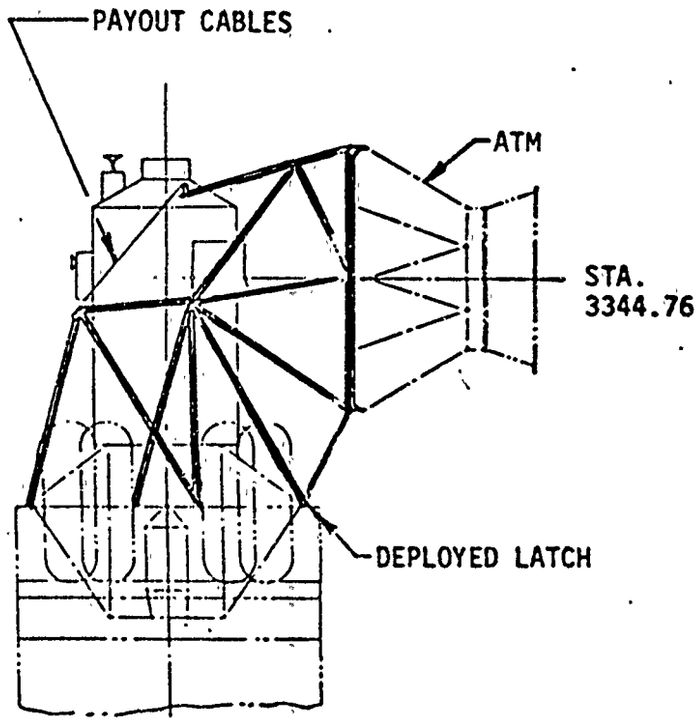

ORBITAL CONFIGURATION

13 OCTOBER 1969

MCDONNELL DOUGLAS CORPORATION

Figure (4)

PAYLOAD SHROUD JETTISON

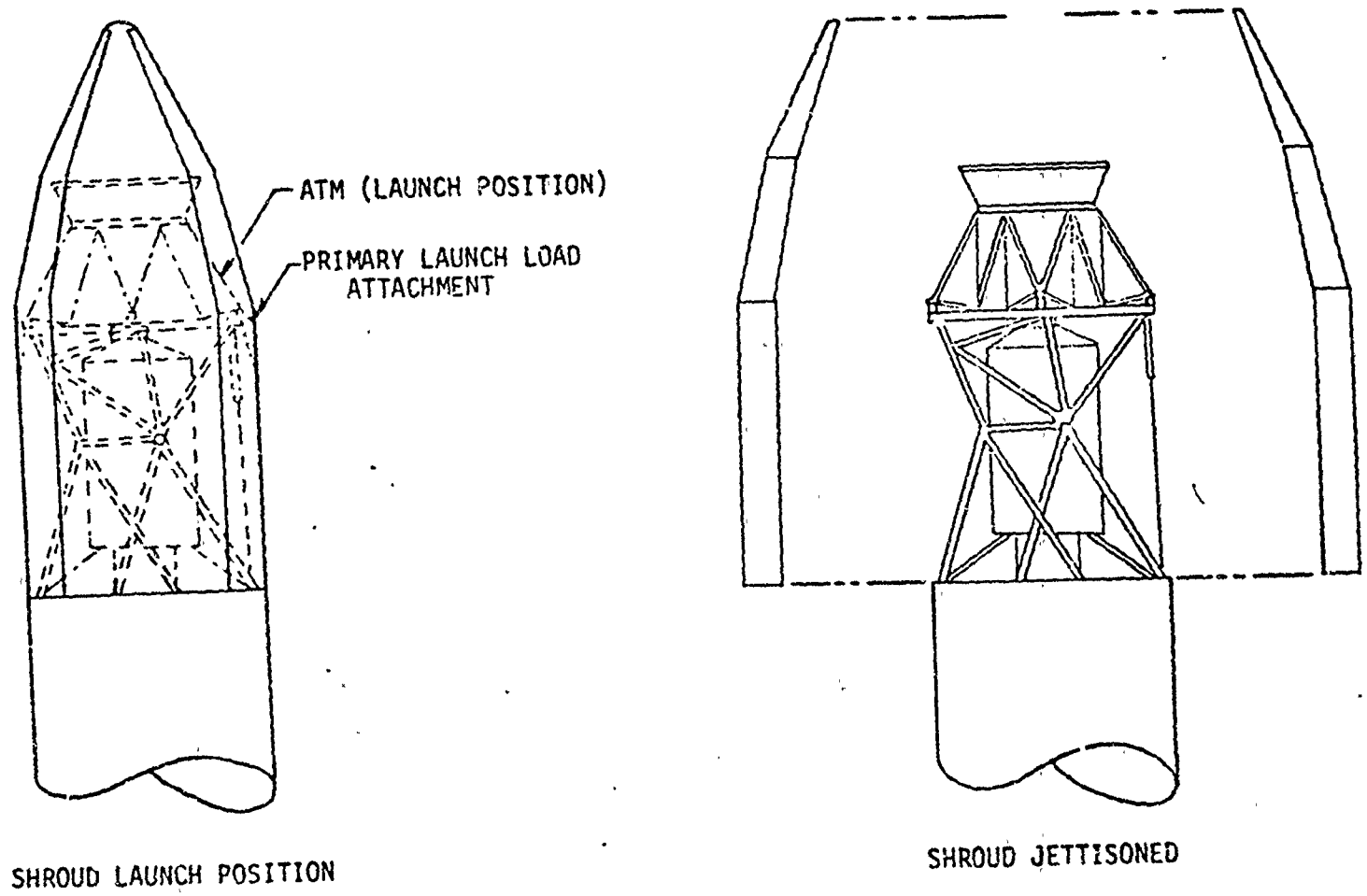

Figure (5)

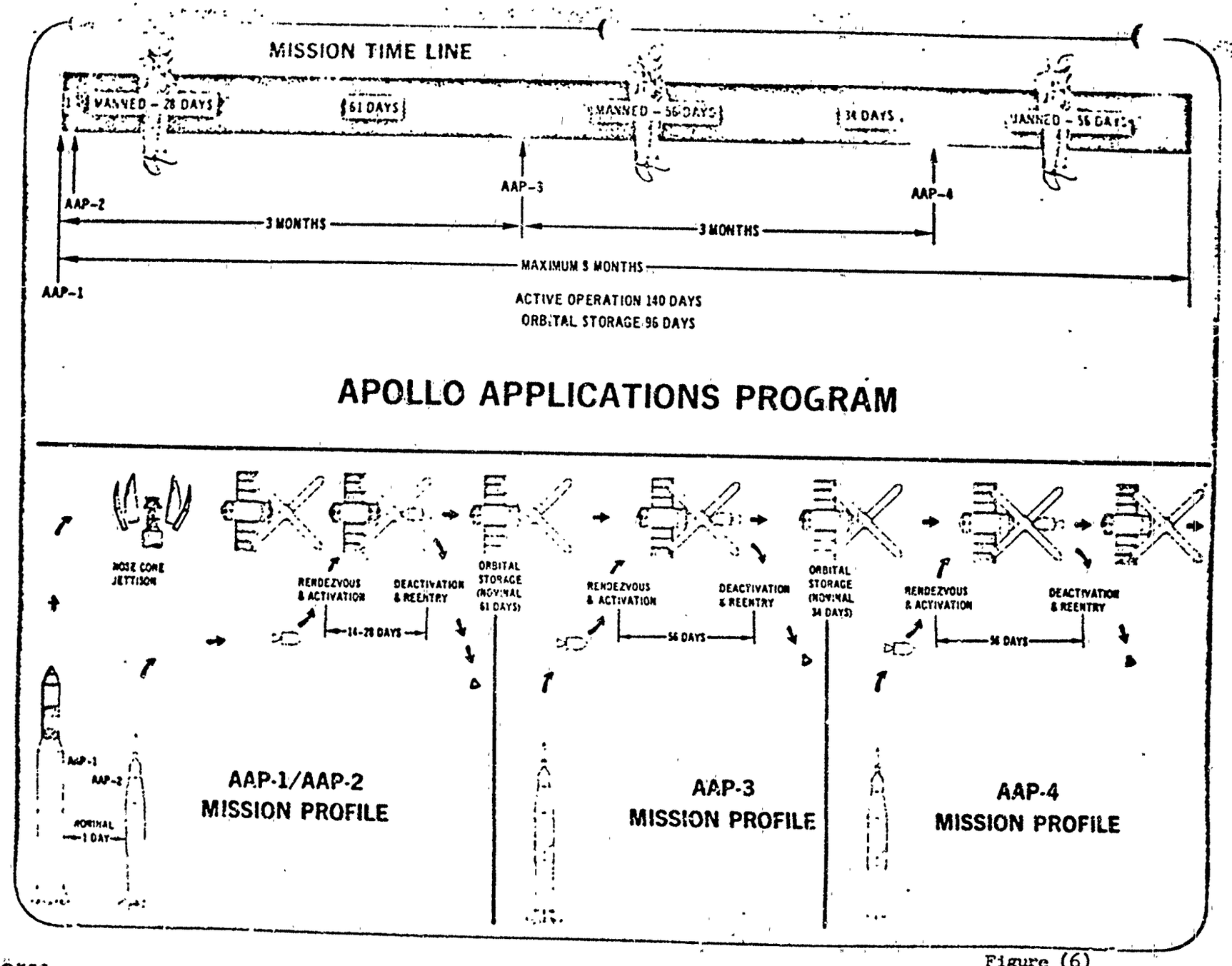

NOTES:

Figure (6)

CLUSTER CONFIGURATION

AAP-1 SOLAR INERTIALLY STABILIZED

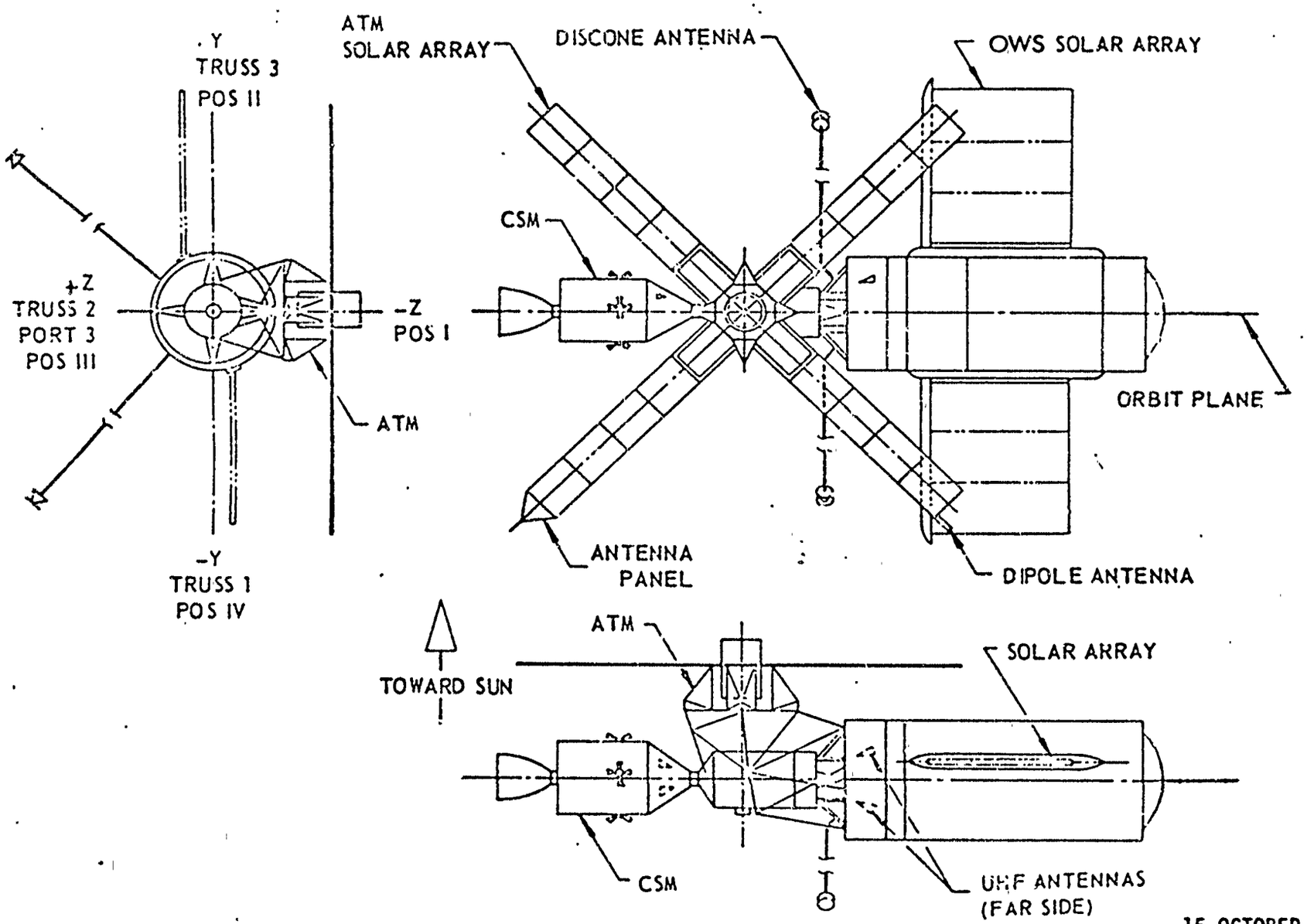

15 OCTOBER 1969
Figure (7)

LIST OF AM CHANGES ASSOCIATED WITH CHANGE FROM WET TO DRY CWS

ITEM	CHANGE	WEIGHT EFFECT
	CCP47	
1	CO_2/CH_2 STORAGE PROVISIONS	25,854 lbs.
2	DELETE SCIENTIFIC AIRLOCK AND ASSOCIATED EXPERIMENTS	-259
3	DELETE MISCELLANEOUS GAS DISTRIBUTION SYSTEM COMPONENTS	-234
4	ADD TWO GAS CONTROL SYSTEMS	91
5	DELETE S-IVB PASSIVATION CONTROL PANEL, WACS INTERFACE CONTROL PANEL, WINDOW AND GAS CONTROL PANEL	-97
6	DELETE LOW PRESSURE TRANSDUCERS THAT DETECT PASSIVATION OF S-IVB	5.5
7	INCORPORATE MODIFICATIONS TO AM INSTRUMENTATION AND DCS SYSTEM	19
8	DELETE DOCKING PORTS #1 AND #4 AND ADD DOCKING PORT #3	0
9	INCORPORATE ATM CONTROLS AND DISPLAYS ACTIVE COOLING REQUIREMENTS IN AM SYSTEM SINGLE AM LOOP	42
10	MODIFY INSULATION INSTALLATION (TUBE REMOVAL AND FAS BOTTLE LOCATION)	47
11	REVISE ALL CONTRACTUAL SPECIFICATIONS AND DOCUMENTS	0
12	PROVIDE NEW ELECTRICAL SYSTEMS ANALYSIS	0
13	REVISE ELECTRICAL POWER SYSTEM	33
14	REVIEW STRUCTURAL ANALYSIS, DYNAMIC ANALYSIS, ETC., FOR SATURN V LAUNCH	0
15	REVIEW GSE-FACILITY REQUIREMENTS	0
16	INCORPORATE FIXED AIRLOCK SHROUD	2,425
17	PROVIDE NEW THERMAL ANALYSIS (INCLUDING SOLAR INERTIAL EFFECTS)	0
18	INCREASE PROGRAM PERIOD OF PERFORMANCE BY SIX MONTHS	0
19	DELETED (GFE CIRCULATION FANS)	0
20	ADD REDUNDANT (3RD) O_2 EVA UMBILICAL CONNECTION	2
21	ADD PROVISIONS FOR TV CONNECTION	9
22	INCREASE HATCH AND WINDOW COVER CYCLE REQUIREMENTS	0
23	AIRLOCK COMPLIANCE WITH ON-ORBIT ACOUSTIC NOISE CRITERION	TBD
24	DELETED (MOVE ATM RECORDER TO AM)	0
25	PROVIDE EMERGENCY AND WARNING SYSTEM UTILIZING GFE SENSORS FOR EMERGENCY DETECTION	10
26	PROVIDE AIRLOCK MODULE REQUIREMENTS FOR CLUSTER INTEGRATED TESTING	0
27	ADD CYCLE TESTS FOR AM BATTERIES	0
28	REDUNDANT PRESSURE SEAL FOR FLEXIBLE AM EXTENSION	TBD
29	UPDATE ZERO-G AND NEUTRAL BUOYANCY TRAINERS	0
30	ADD EXPERIMENT ICSA ON AM AND IMPACT LATEST EIRD'S	0
31	INCORPORATE POSITIVE PRESSURIZATION OF SUIT COOLING AND ATM COOLING SUBSYSTEMS RESERVOIRS	15
32	INCORPORATE LAUNCH PAD GROUND UMBILICAL	TBD
33	PROVIDE INCREASED NUMBER AND REDESIGN OF SPEAKER INTERCOMS	-19
34	PROVIDE FOR INCORPORATION OF IN-ORBIT REMOTE PRESSURIZATION OF SWS	10
	CCP49	
1	PROVIDE APOLLO TELESCOPE MOUNT DEPLOYMENT ASSEMBLY	1,272
2	PROVIDE PAYLOAD ENCLOSURE	14,445

Figure (8)

NOTES:

AIRLOCK GENERAL ARRANGEMENT

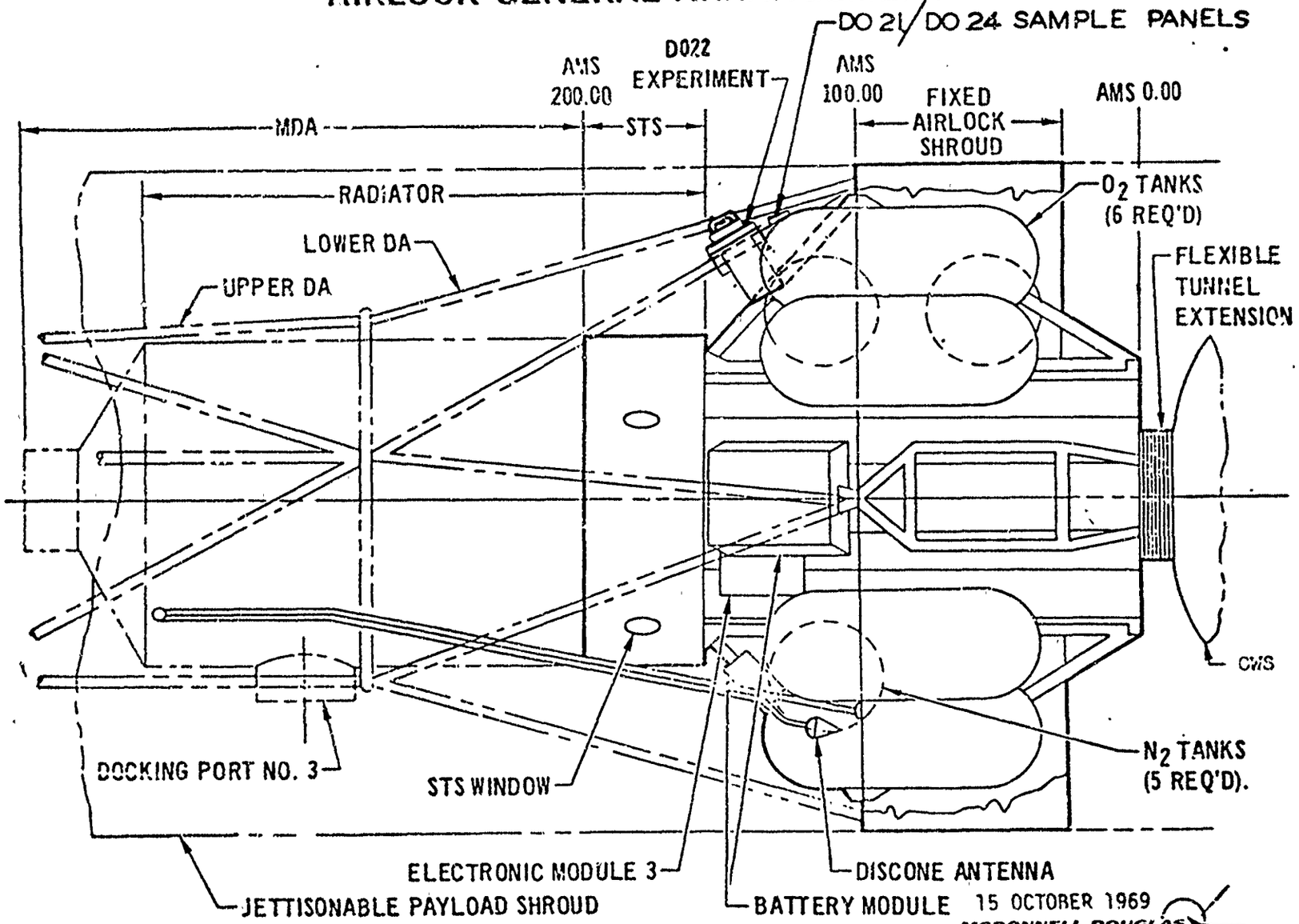

15 OCTOBER 1969

MCDONNELL DOUGLAS CORPORATION

Figure (9)

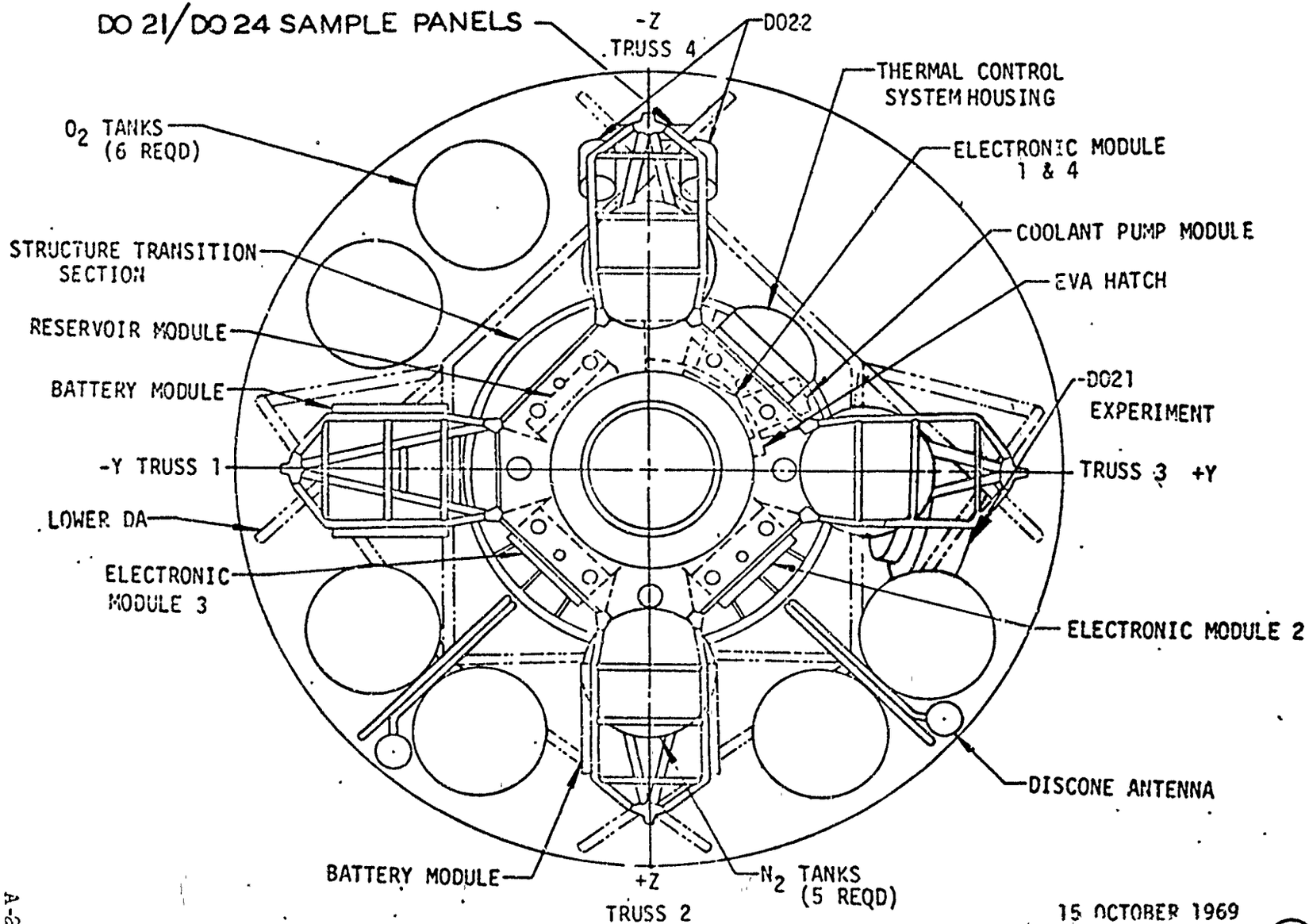

AIRLOCK GENERAL ARRANGEMENT
LOOKING FORWARD

15 OCTOBER 1969

MCDONNELL DOUGLAS CORPORATION

Figure (10)

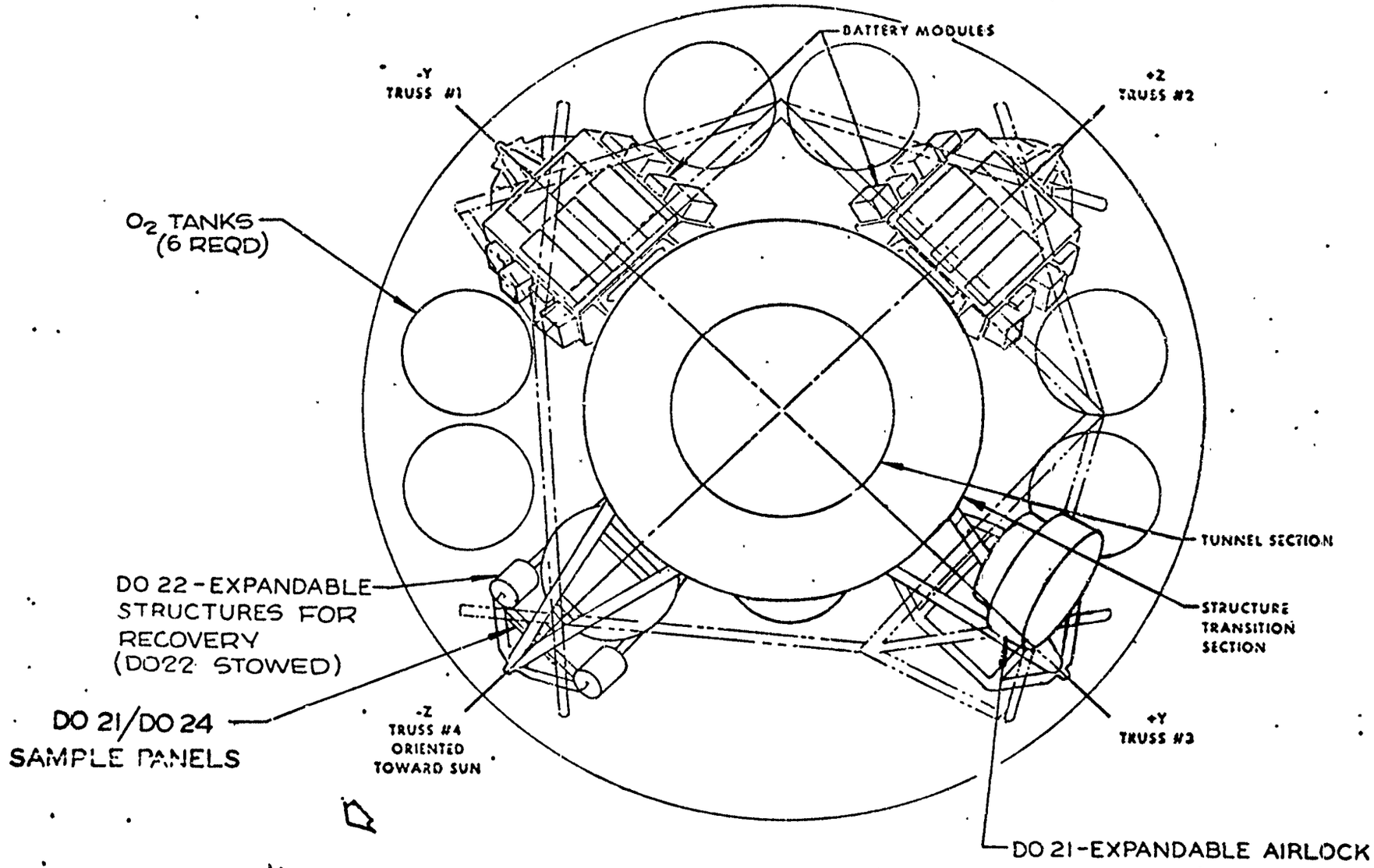

TRUSS GENERAL ARRANGEMENT

(LOOKING AFT AT AMS 200)

15 OCTOBER 1969

MCDONNELL DOUGLAS CORPORATION

Figure (11)

EXPERIMENTS

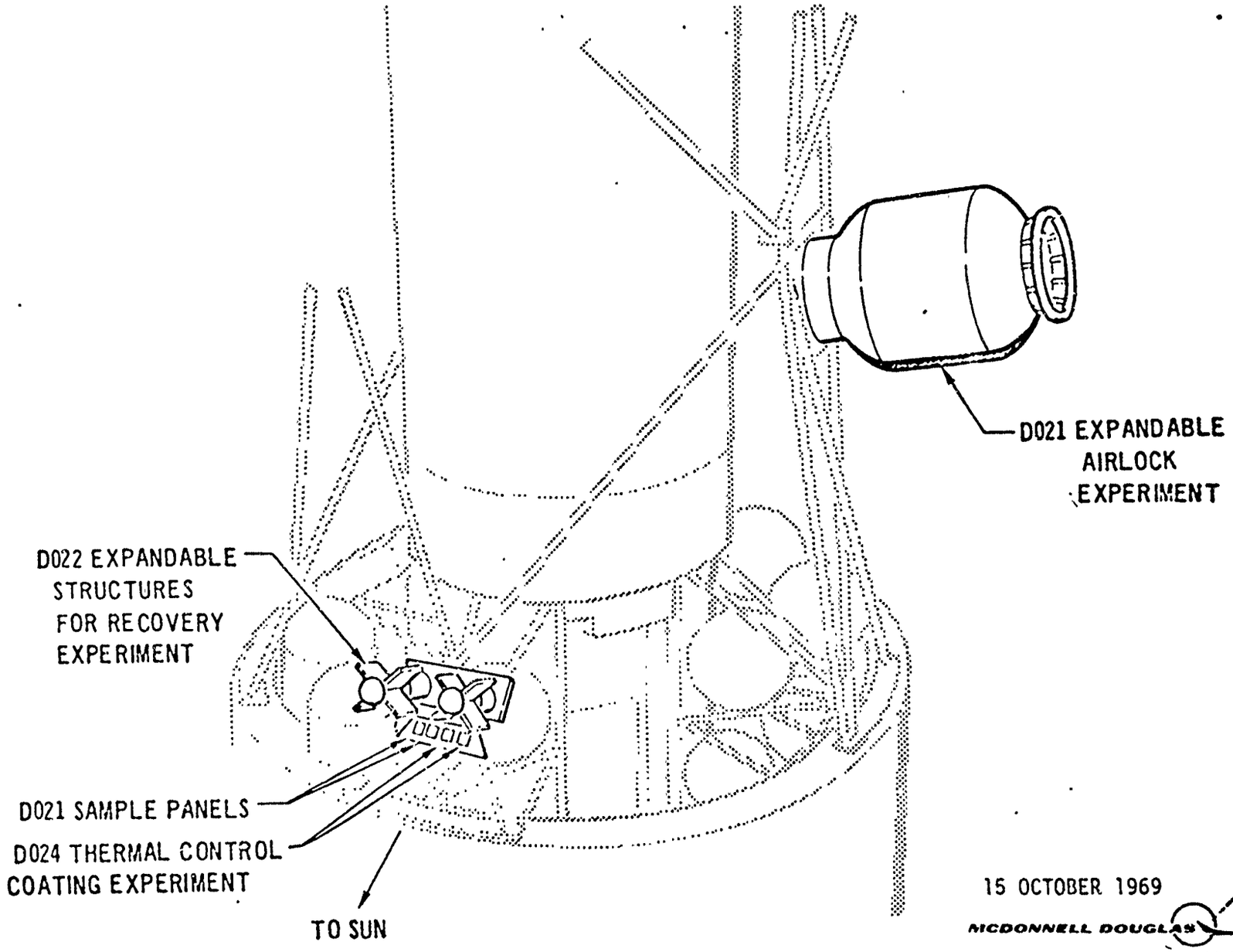

15 OCTOBER 1969

MCDONNELL DOUGLAS CORPORATION

Figure (12)

GENERAL DESIGN CONSIDERATIONS USED IN DETERMINING LOCATION OF EXPERIMENTS D021 & D024

- MOUNTABILITY
  - a. STABILITY
  - b. LOAD REQUIREMENTS ON AM AND ATM TRUSS NETWORK
- ACCESSIBILITY TO EXPERIMENT BY ASTRONAUT
  - a. ORIENTATION OF EXPERIMENT
  - b. SURROUNDING STRUCTURE FOR MOBILITY AIDS
  - c. DISTANCE FROM EVA HATCH
- SHADING OF STS/MDA RADIATORS BY EXPERIMENT
- SHADING OF EXPERIMENT BY ATM SOLAR ARRAY PANELS
  - a. TEMPERATURE CONSIDERATIONS
  - b. PHOTOGRAPHIC LIGHTING CONSIDERATIONS
- LINE OF SIGHT TO PHOTOGRAPH D021 DEPLOYMENT AND ASTRONAUT INGRESS/EGRESS
  - a. VISIBILITY OF EXPERIMENT FROM CSM
  - b. VISIBILITY OF EXPERIMENT FROM EVA HATCH
  - c. VISIBILITY OF EXPERIMENT FROM STS PORT WINDOW

Figure (13)

INTERFERENCE ATM-DA TRUSS WITH DO21

(FORMER POSITION DO21 EXP. ON AM TRUSS#3 SHOWN)

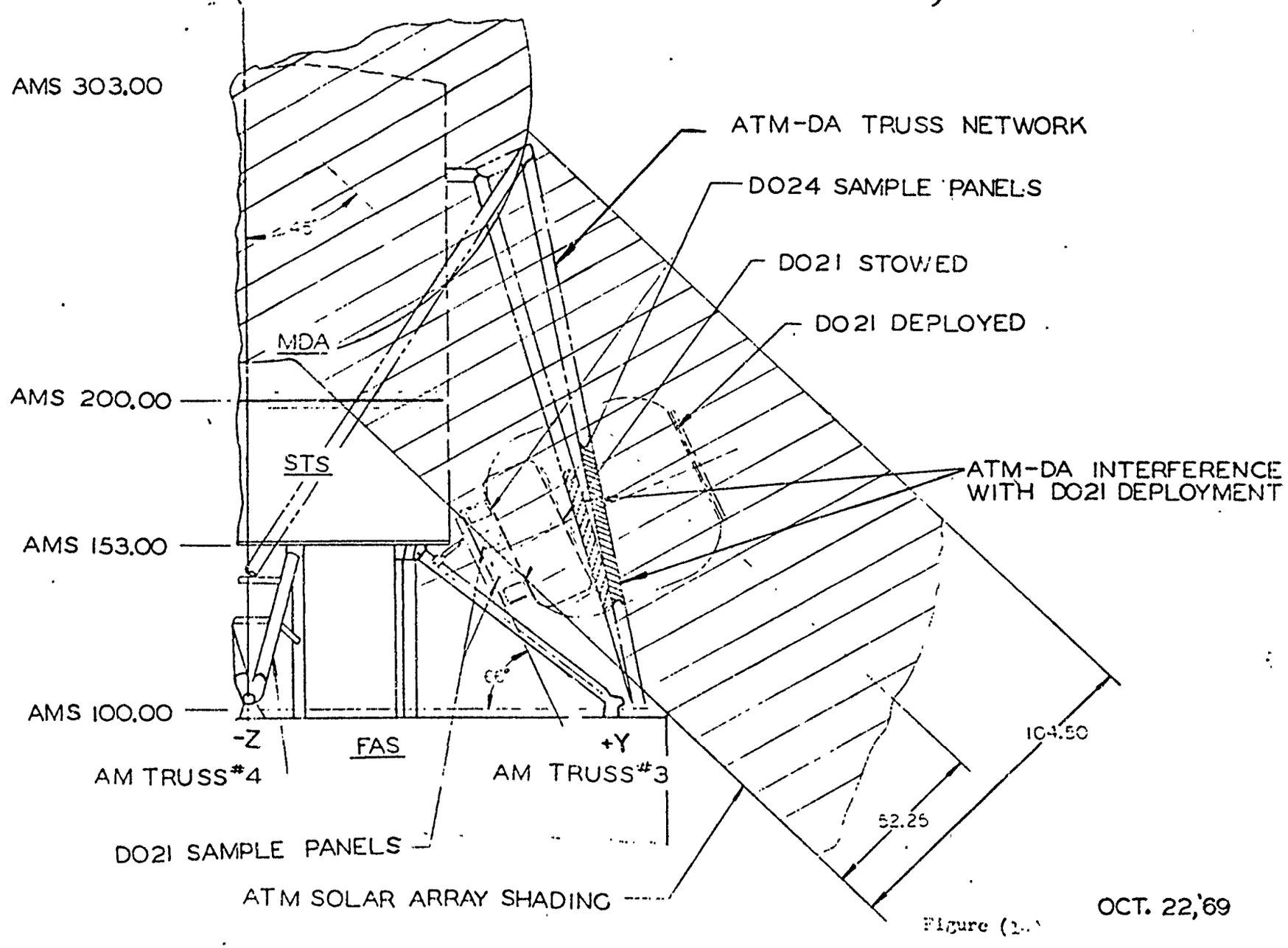

OCT. 22,'69

Figure (1.)

LOCATION NO. 1 DESIGN CONSIDERATIONS

- LARGE MOMENT IS APPLIED TO TRUSS NO. 3 WITH POSSIBLE TRUSS BEEF-UP REQUIRED. EXPERIMENT POSITIONING AFFECTED BY POSSIBLE INTERFERENCE WITH ATM-DA.

- ACCESSIBILITY TO EXPERIMENT IS GOOD WHEN ASTRONAUT IS ON FAS, BUT POOR DURING TRANSFER FROM EVA HATCH AROUND DEPLOYED EXPERIMENT UP TO FAS. SUBSEQUENT EVA'S ARE COMPLICATED BY THIS LOCATION.

- STS RADIATOR IS PARTIALLY SHADED BY EXPERIMENT. IF EXPERIMENT IS MOVED TOWARD AMS 100, SHADING OF RADIATOR IS REDUCED, AND FIELD OF VIEW FROM EVA HATCH IS DEGRADED BY DEPLOYED EXPERIMENT.

- ATM SOLAR ARRAY BLOCKS CONSIDERABLE INCIDENT SOLAR RADIATION TO EXPERIMENT. FLOODLIGHTING IS REQUIRED FOR PHOTOGRAPHY.

- ASTRONAUT HAS DIRECT LINE OF SIGHT TO EXPERIMENT FROM EVA HATCH, BUT THE FIELD OF VISION FROM THE STS WINDOW IS REDUCED BY THE DEPLOYED EXPERIMENT.

Figure (15)

LOCATION NO. 1 - ON AM TRUSS #3

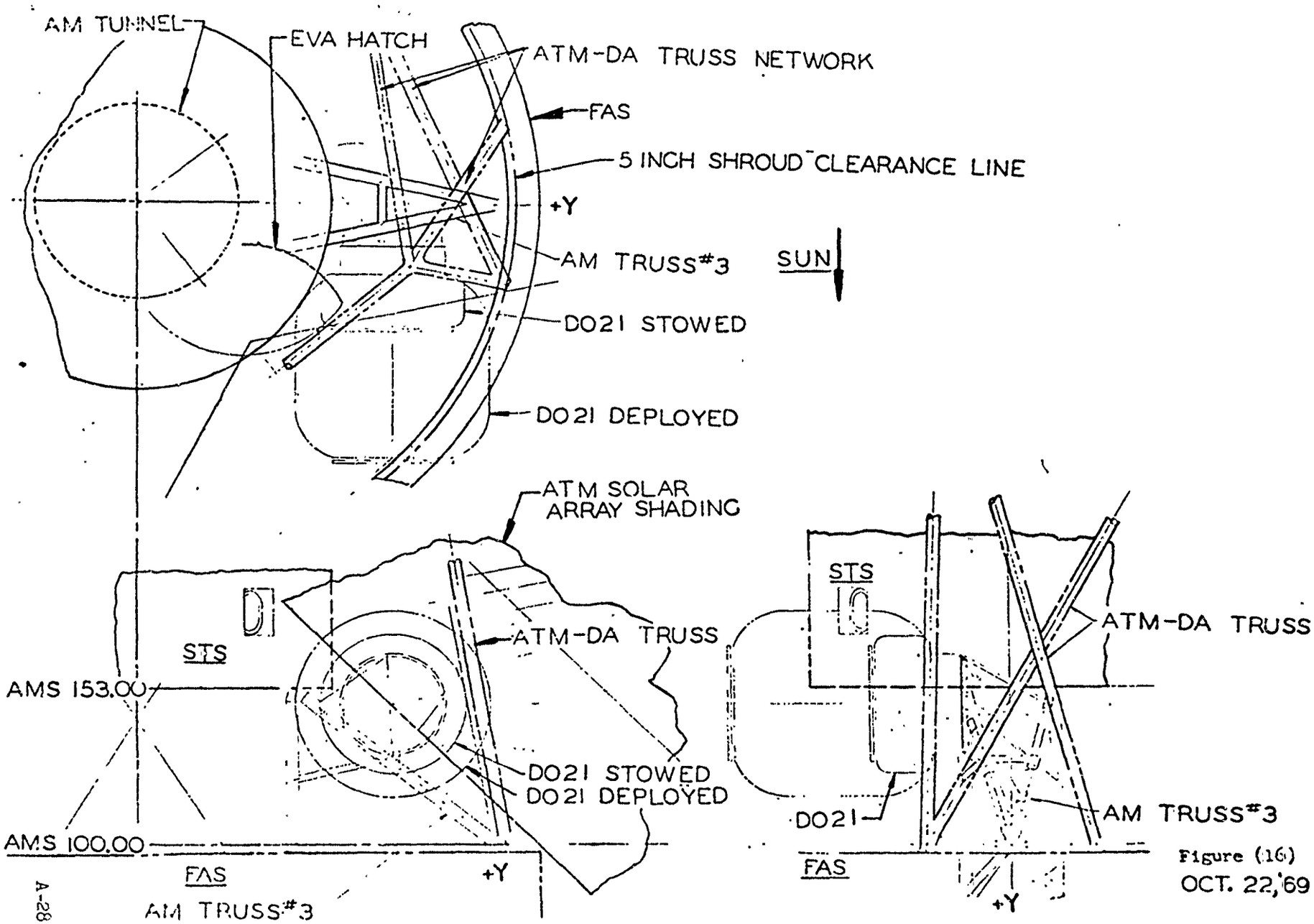

Figure (16)
OCT. 22, '69

LOCATION NO. 2 DESIGN CONSIDERATIONS

- EXPERIMENT SUPPORT STRUCTURE WOULD BE REQUIRED ON THE STS, RESULTING IN A REDESIGN OF THE STS RADIATOR.
- EXPERIMENT IS ON THE OPPOSITE SIDE OF TRUSS NO. 3 FROM THE EVA HATCH. ASTRONAUT MUST CROSS OVER TRUSS NO. 3 OR UNDER THE DA FOR EXPERIMENT EVA.
- EXPERIMENT SHADES PARTS OF BOTH THE STS AND MDA RADIATORS.
- ATM SOLAR ARRAY BLOCKS CONSIDERABLE INCIDENT SOLAR RADIATION TO EXPERIMENT. FLOODLIGHTING IS REQUIRED FOR PHOTOGRAPHY SINCE DEPLOYED EXPERIMENT IS IN SHADE.
- EXPERIMENT ALMOST COMPLETELY BLOCKS STS WINDOW.
- NO VISIBILITY FROM EVA HATCH.

Figure (17)

LOCATION NO.2 - ABOVE O_2 TANKS

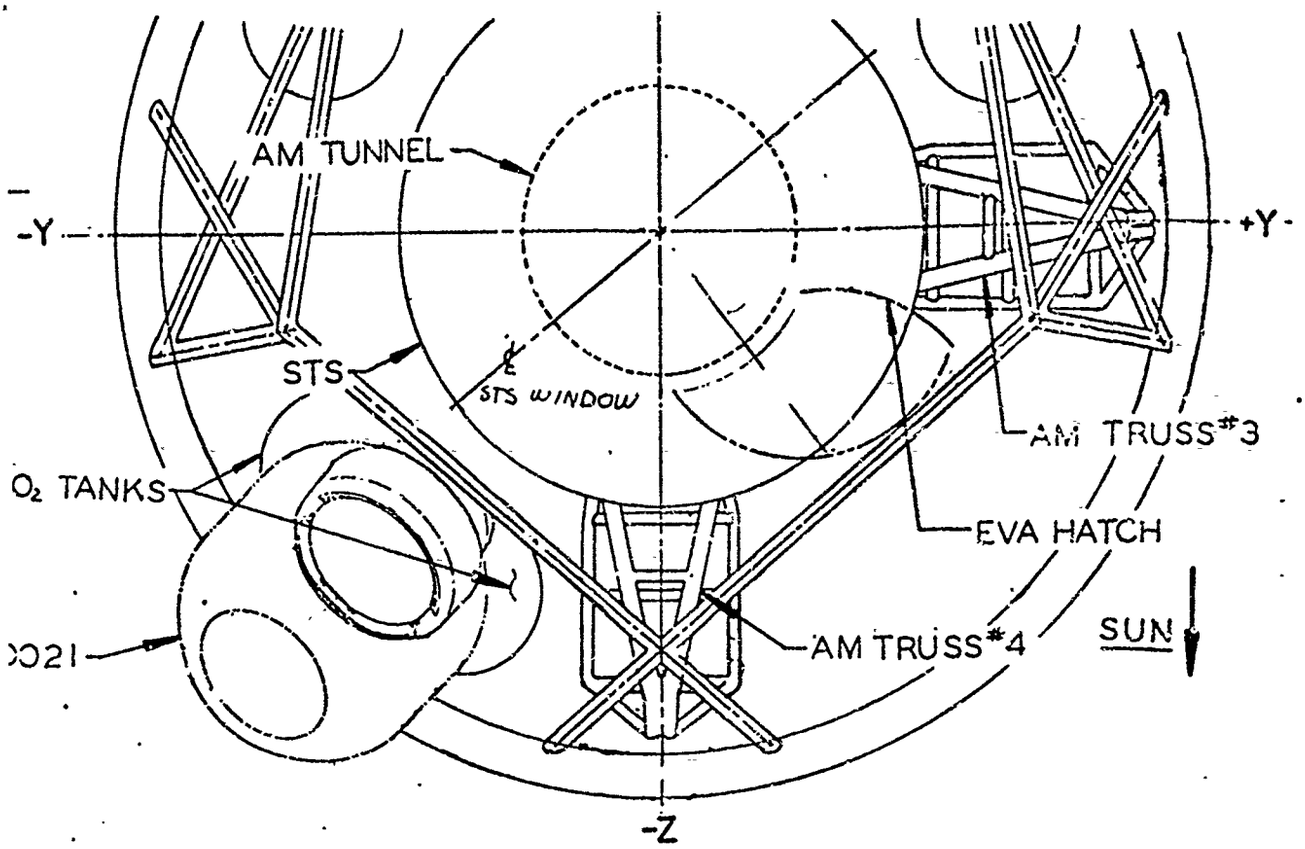

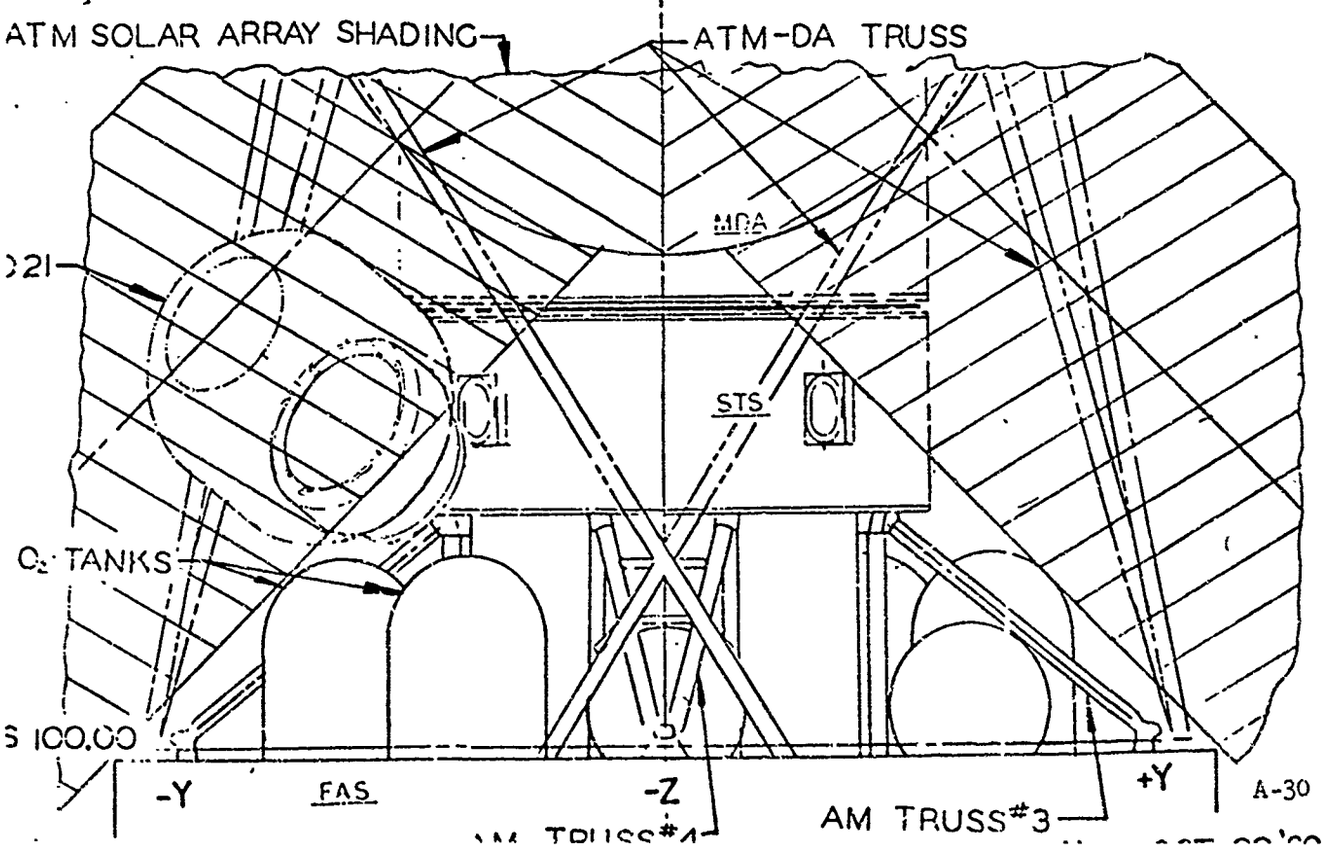

LOCATION NO. 3 DESIGN CONSIDERATIONS

- EXPERIMENT SUPPORT STRUCTURE INTERFACES WITH OPENING OF EVA HATCH.
- STS RADIATOR IS PARTIALLY SHADED BY EXPERIMENT.
- PACKAGED EXPERIMENT IS IN SUNLIGHT; DEPLOYED EXPERIMENT IS IN SUNLIGHT EXCEPT FOR THE INGRESS/EGRESS HATCH, WHICH IS SHADED BY THE ATM SOLAR ARRAY.
- FIELD OF VIEW FROM STS WINDOW IS REDUCED BY DEPLOYED EXPERIMENT.

Figure (19)

LOCATION NO. 3 - ABOVE EVA HATCH

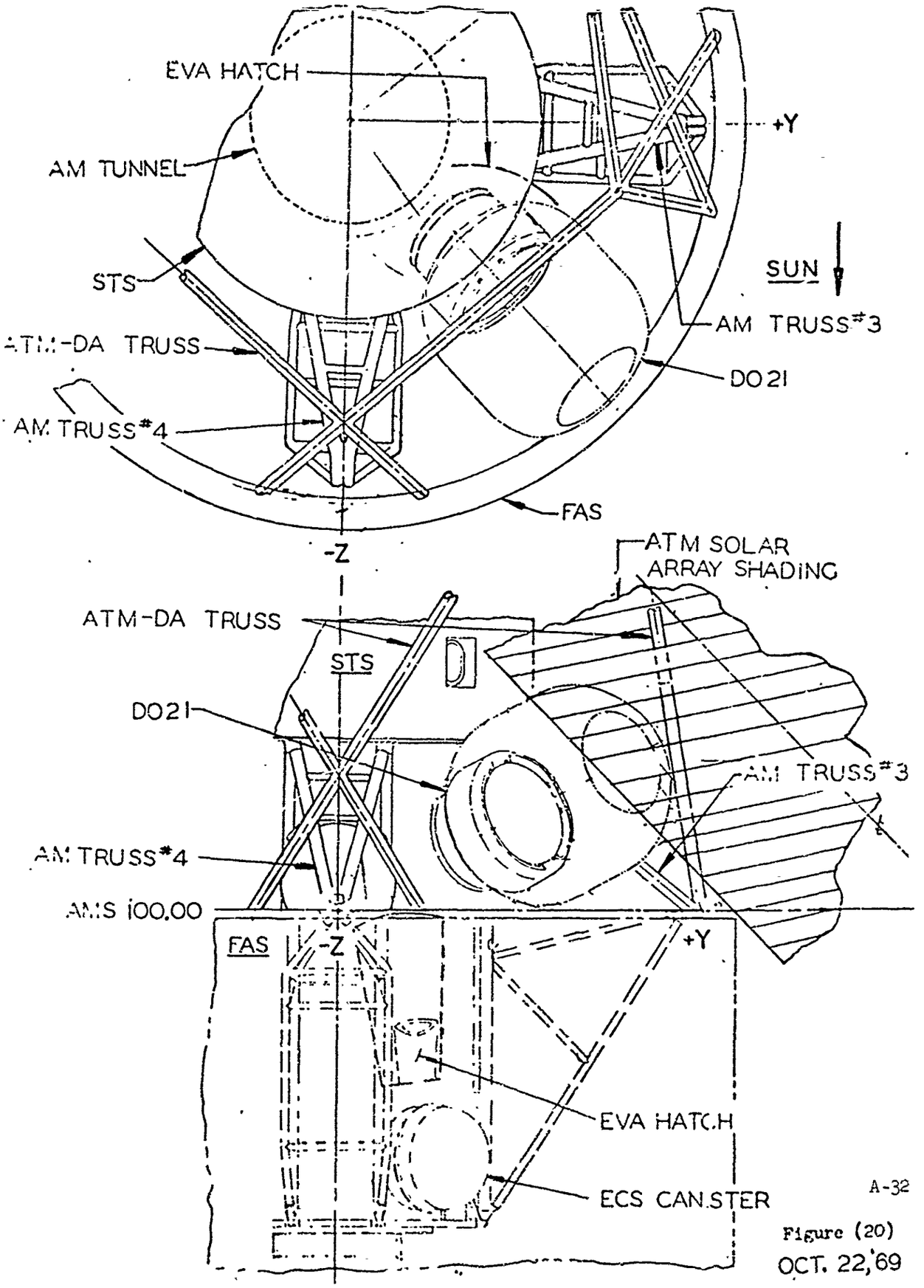

A-32

Figure (20)

OCT. 22, '69

LOCATION NO. 4 DESIGN CONSIDERATIONS

- SUPPORT STRUCTURE REQUIRED BETWEEN ATM-DA TRUSS MEMPERS. EXPERIMENT POSITION DEPENDS ON ASSESSMENT OF POSSIBLE INTERFERENCE WITH THE DEPLOYED UPPER ATM-DA TRUSS ASSEMBLY.
- GOOD ACCESSIBILITY FROM EVA HATCH, BUT AVAILABLE STRUCTURE FOR ADDING MOBILITY AIDS IS LIMITED.
- MDA RADIATOR IS PARTIALLY SHADED BY EXPERIMENT.
- ATM SOLAR ARRAY COMPLETELY BLOCKS INCIDENT SOLAR RADIATION TO EXPERIMENT. FLOODLIGHTING IS REQUIRED FOR PHOTOGRAPHY.
- VISIBLE FROM CSM, EVA HATCH, AND STS WINDOW.

Figure (21)

LOCATION NO.4 - FRONT SIDE DA TRUSS

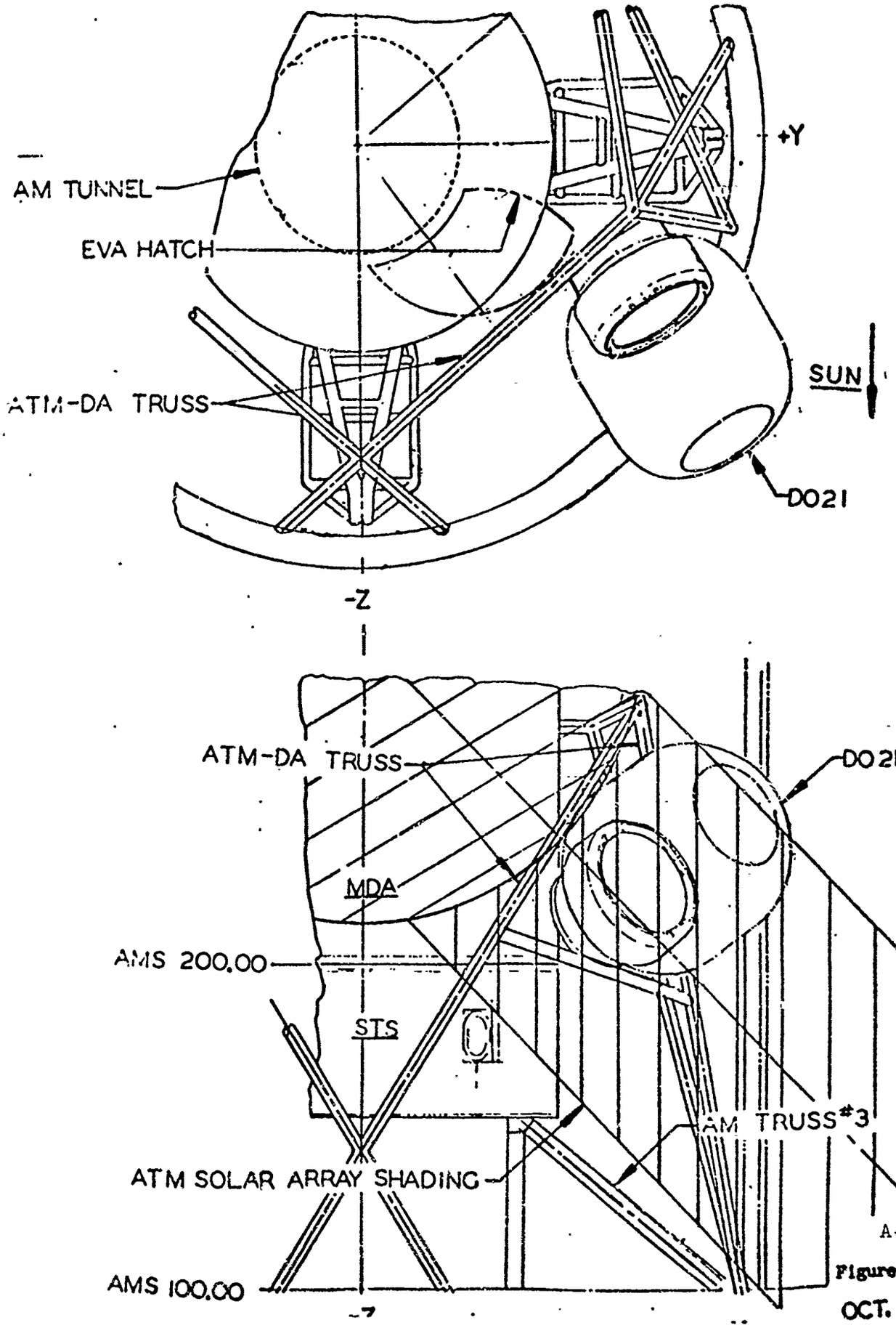

A-34

Figure (22)

OCT. 22,'69

LOCATION NO. 5 DESIGN CONSIDERATIONS
(PREFERRED LOCATION)

- EXPERIMENT POSITION REQUIRES LITTLE ADDITIONAL SUPPORT STRUCTURE.
- GOOD ACCESSIBILITY WITH SUFFICIENT STRUCTURE AVAILABLE FOR ADDING MOBILITY AIDS.
- MDA RADIATOR IS PARTIALLY SHADED BY EXPERIMENT.
- EXPERIMENT IN THE PACKAGED AND DEPLOYED CONFIGURATION RECEIVES PARTIAL SUNLIGHT. FLOODLIGHTING MAY NOT BE REQUIRED FOR PHOTOGRAPHY.
- VISIBILITY FROM CSM, EVA HATCH, AND STS WINDOW.

Figure (23)

LOCATION NO.5 - +Y SIDE DA TRUSS

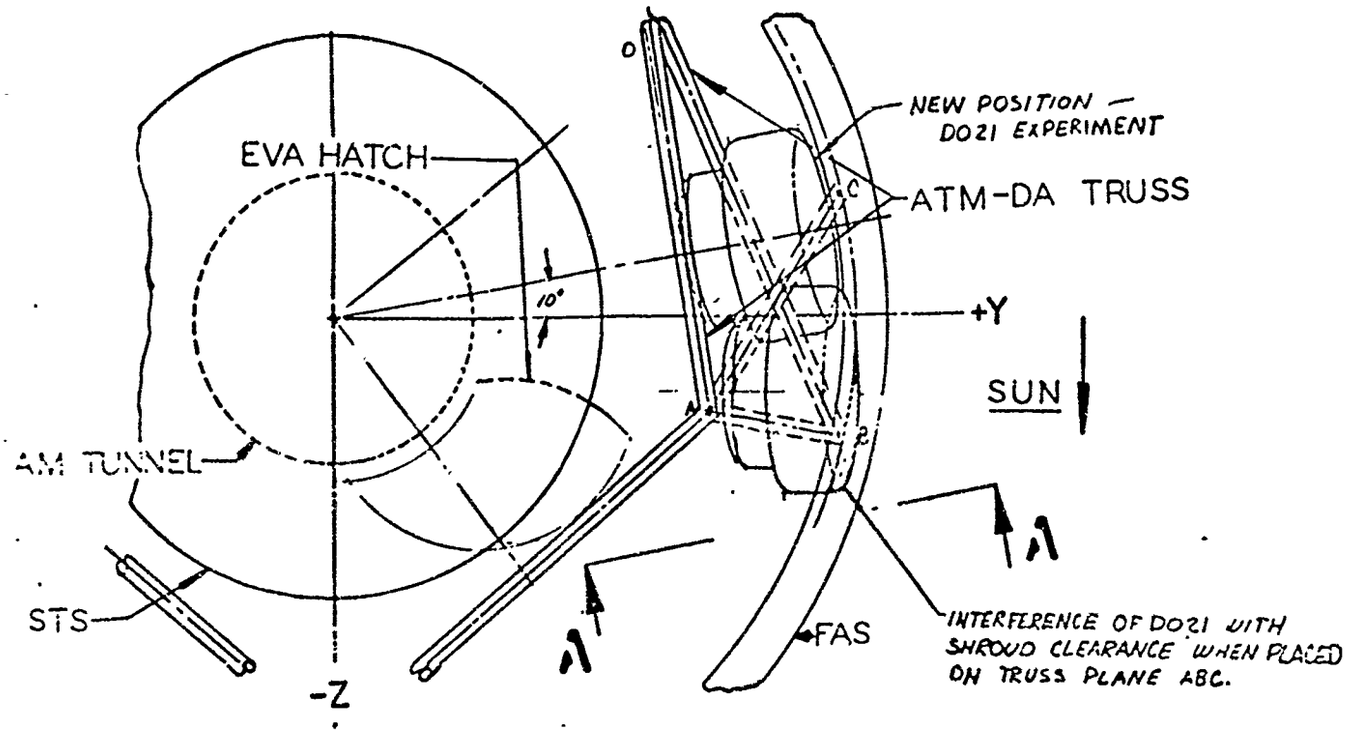

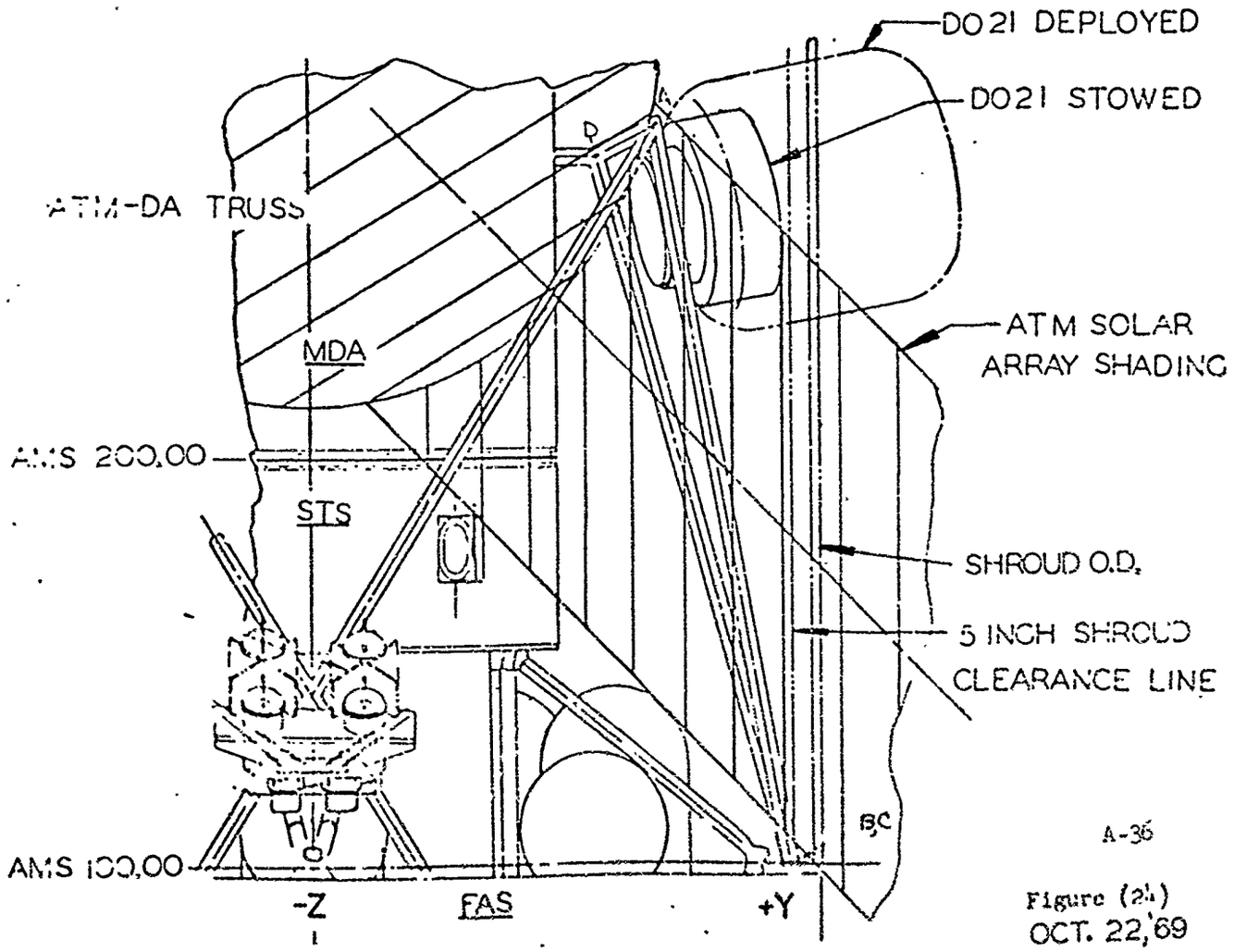

A-36

Figure (24)
OCT. 22,'69

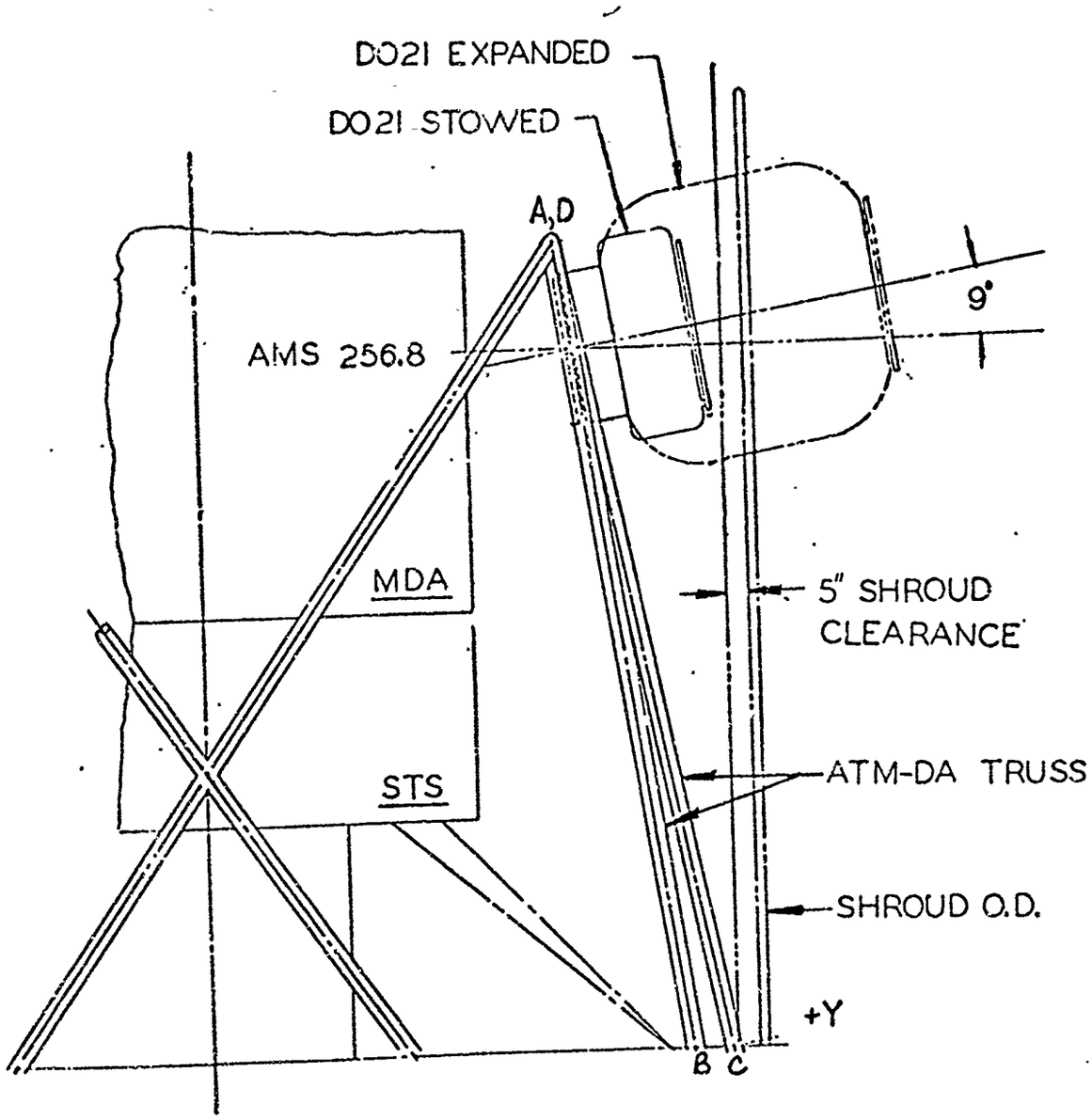

A-1

Figure (24) Cont'd.
OCT. 22,'69

COMMENTS ON RANGE SAFETY REQUIREMENTS AS APPLIED TO D021

1. GAC should complete the forms for Validation of Compliance with ordnance requirements as soon as possible (AFETR127-1, pages 169 and 171). This will permit KSC Range Safety to determine concurrence with Category A or B pyrotechnics, as presented by GAC in the validation forms.

2. If the D021 pyrotechnics are considered as Category A, then the arm circuit must be remotely monitored at a Range Safety Console, prior to launch. Thus, Category A involves wiring changes in the following areas:

   (a) Experiment D021 (GAC) must provide direct readout from the arming relay.

   (b) AM/S-IVB (MDAC-ED & WD) wiring must be provided from the AM to the S-IVB forward skirt umbilical.

   (c) Launch complex (GE/PAA) umbilical must include wiring for arming relay readout.

3. If Category A is considered, then range safety will involve the following organizations:

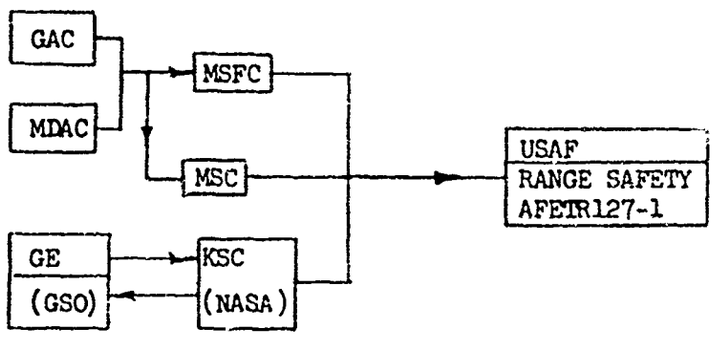

4. All of the data above should be incorporated in the EIRD or subsequent ERD.

Figure (25)

ACTION ITEM STATUS

ACTION ITEMS	RESPONSIBILITY	STATUS
1. Investigate possibility of filming D021 deployment from CM windows.	MSFC, USAF	In work at MSFC
2. Determine a contingency task enalysis in case of a remote harness-release malfunction.	MSFC, GAC	No work performed
3. Check on reliability and safety of gas - bottle pyros relative to proximity of astronauts, if contingency mode of deployment exercised.	MSFC	No work performed
4. Account for additional D021 control panel in contingency mode task analysis.	MSFC, GAC	No work performed
5. Discuss with astronauts the MDAC-ED request for additional handhold loops on D021.	MSFC, GAC	In work. Either hand-hold or foot restraint.
6. Determine the force required to remove return sample panels from Velcro attach pads.	GAC	Unknown
7. Determine whether or not tethers are required between sample panels and the pressure suit or the AM structure.	MSFC	In work. Possibilities are: Panels attached to net bag, panels in container attached by tether to pressure suit.
8. Determine venting requirements for sample-panel containers during launch phase.	GAC	Relief valves added.
9. Determine mounting position of return-sample containers and design support structure.	MDAC-ED	In work
10. Following drawings to be forwarded to MDAC-ED: 68Q31133, Return-Sample Container 69Q31134, Return Sample 69Q31135, Return Sample (a) What assurance is there that drawings are kept up-to-date?	GAC	Drawings delivered by GAC

Figure (26)

ACTION ITEM STATUS
(continued)

ACTION ITEMS	RESPONSIBILITY	STATUS
11. Supply MDAC-ED with an allowable temperature range of the D021 batteries.	GAC	MDAC-ED awaiting information
12. Determine experiment access requirements relative to design of the Payload Shroud. (e.g., T/M, parts or experiment replacement)	MSFC	Access to cluster through PS being defined by MDAC for Dry Workshop.
13. Determine when experiment pyrotechnics should be installed during the countdown.	MSFC	In work. Perhaps T-4 days to T-6 days.
14. Determine whether the 5V power supply ground (GAC drawing 66QS1296) is isolated from bus ground.	GAC	To be obtained from GAC for MDAC-ED.
15. Comment on proposed MDAC-ED changes to D021 controls and displays.	GAC	To be discussed at 28/29 October meeting. (See D021 EIRD)
16. Discuss handling and hoisting of D021 relative to AM.	GAC, MSFC, MDAC-ED(GSE)	No coordination to date.
17. Determine D021 lighting requirements.	MDAC-ED	In work and dependent on ATM-DA design.

Figure (26) Cont'd.

INTER-OFFICE MEMO

Memo No.: Airlock E451-2011
Date: 29 September 1969
Revision A: 3 October 1969

TO: F. J. Smith

CC: W. T. Boman, R. T. Brill, C. R. Carter, M. R. Czarnik, D. A. DeFreece, R. P. Gillooly, D. M. Green, A. M. Hatch, H. F. Imster, B. E. Keith, J. E. Lovelace, E. C. Lundergan, W. B. Lyttle, P. Lutz, J. D. McCullough, R. A. Pepping, F. J. Sanders, H. D. Tripp, R. E. DeFrees

SUBJECT: N_2 Service for Experiment D021, Expandable Airlock Technology

References: (a) Final Failure Mode and Effects Analysis, D021 Experiment, Goodyear Aerospace Corporation Report GER 13171-1, 14 July 1967
(b) Range Safety Manual, AFETRM 127-1, 1 January 1969
(c) Experiment Integration Requirements Document (EIRD), D021 Expandable Airlock Technology, 30 June 1969

1. Nitrogen pressurization of D021 is used for initial experiment deployment and Proof pressure prior to EVA, and for Working Pressure subsequent to EVA. Three 150 in.^{3} N_2 bottles which are designed into the experiment are used for this purpose and require topping-off at the latest practical moment in the pre-launch schedule while in the VAB. One of the bottles, used for Working Pressure, is pressurized at 3150 psig. The two remaining bottles, used for Proof Pressure are pressurized at 2250 psig. Since equipment for topping-off the pressure vessels is available in the VAB, it is necessary to determine the compatibility between the pressure vessel design criteria and the KSC Range Safety Manual requirements. A supplemental addendum to Reference (a) indicates that the N_2 bottles are designed to a proof pressure factor of safety of 2.50 and a burst pressure factor of safety of 3.33. Reference (b), section 7, requires a proof pressure factor of safety of 1.50 and a burst pressure factor of safety of 2.00. Thus, compatibility is proved and topping-off can be performed safely in the VAB.

2. Paragraph 9.1.7 of Reference (c) indicates that gaseous N_2 is to be supplied for pre-installation testing of D021 by MDAC-ED. (It should be noted that Reference (c) is not a contractual document and at present is under a detailed review by the writer. Therefore, no statements in the document are binding until MDAC-ED recommendations are discussed and acted upon with MSFC). In addition, Paragraph 9.2.6 of Reference (c) indicates a N_2 service cart to be used for Subsystem and Flight Readiness Testing at KSC. The writer has confirmed in discussions with MSFC,

Figure (27)

Goodyear Aerospace Corporation (GAC), and KSC that responsibility has
(A) not been assigned for this GSE. However, it is reasonable to assume that a special service cart will be unnecessary at KSC, based on the information presented in paragraph 1 and the pressurizing equipment available in the Manned Space Operations Building (MSOB). In addition, PIA testing can be accomplished at MDAC-ED using either the Class 10 ECS high pressure bench with a helium service trailer converted to gaseous N_2 or the propulsion PIA bench which contains its own high pressure source.

3. Conclusion: N_2 servicing can be supplied to D021 by existing equipment at MDAC-ED and KSC.

Lloyd E. Schultz
Group Engineer
AM Experiment Coordination
Dept. E451, Sta. 26526

LES:re

Figure (27) Cont'd.

CLEAN ROOM CLASS COMPARISON

CLASS (MIAC-ED Process Specs)

4 - Air conditioned, with throw-away filters.

6 - Filtered air, removal of 65% of particles 0-5μ, 95% 5-9μ, 99% $\geq$ 10μ.

10 - Filtered air to removal of 99.9% of particles $\geq$ 1μ, 90% of particles .3-1μ.

CLASS (Fed-Std.-209 a)

100 - Particle count $\leq$ 100 $\frac{\text{particles}}{\text{ft}^3}$ or 3.5 $\frac{\text{particles}}{\text{liter}}$ (size $\geq$ .5μ)

10,000 - (a) Particle count $\leq$ 10,000 $\frac{\text{particles}}{\text{ft}^3}$ or 350 $\frac{\text{particles}}{\text{liter}}$ for (size $\geq$ .5μ)

(b) Particle count $\leq$ 65 $\frac{\text{particles}}{\text{ft}^3}$ or 2.3 $\frac{\text{particles}}{\text{liter}}$ for (size $\geq$ 5μ)

100,000 - (a) Particle count $\leq$ 100,000 $\frac{\text{particles}}{\text{ft}^3}$ or 3,500 $\frac{\text{particles}}{\text{liter}}$ for (size $\geq$ .5μ)

(b) Particle count $\leq$ 700 $\frac{\text{particles}}{\text{ft}^3}$ or 25 $\frac{\text{particles}}{\text{liter}}$ for (size $\geq$ 5μ)

Figure (28)

APPENDIX B

SP-7099 DATED 23 SEPTEMBER 1969

D-21 AIRLOCK EXPERIMENT VACUUM CHAMBER DEPLOYMENT

FAILURE ANALYSIS REPORT

SP-7087 DATED 4 SEPTEMBER 1969

THERMAL ANALYSIS

EFFECT OF APOLLO TELESCOPE MOUNT ON

D-21 AIRLOCK LOCATION

F-ID-15(7-60)(77-10)
REF ENGINEERING PROCEDURE S 017

ENGINEERING MEMORANDUM

23 September 1969
SP-7099

Subject: D-21 Airlock Experiment Vacuum Chamber Deployment Failure Analysis Report

Reference: (a) SP-7087 dated 4 September 1969 - Thermal Analysis - Effect of Apollo Telescope Mount on D-21 Airlock Location

INTRODUCTION AND SUMMARY

The initial deployment test in the vacuum chamber at Arnold Engineering Development Center (AEDC) resulted in some damage to the expandable structure. The deployment was intermittent and final expansion step was rather sudden.

The primary reason for the erratic deployment is attributed to low temperature effects on the materials, compounded by an excessive pressure rise prior to full preshaping of the structure.

A review of all pertinent factors indicates that the environmental test procedures should be revised to more realistically simulate the orbital space environment as well as some design improvements to the airlock.

For design improvement, it is planned to add a thermal insulation blanket to the packaged state of the airlock and to revise the pressurization system to a much slower flow rate from a limited supply container. The thermal environment values are being revised in the Qualification Test Procedures to reflect the thermal analysis results.

TEST DESCRIPTION

The deployment test was conducted using the Qualification Test Unit (GAC Serial No. 1). The airlock was installed in the Mark I vacuum chamber on 17 June 1969 and pump down was started. The following day, the LN_2 cold wall cool down was started at 11:30 a.m. and deployment was initiated at 5:45 p.m. At the time of deployment, a test thermocouple located on the exterior of the hatch read -85° F, and the temperature sensors built into the airlock expandable structure were

reading +28° F to +42° F. The test was intended to be conducted at a temperature -65° F. Internal airlock pressure readings were recorded during deployment and are presented as Figure 1.

Movies were taken of the airlock deployment and correlated to the pressure recordings.

ANALYSIS OF DATA

Based on the above temperature readings, it was theorized that the exposed expandable structure must have reached -85° F or even colder. The difference in temperatures at the various locations could be attributed to the fact that all airlock temperature sensors are packaged well into the interior of the folded material in the launch configuration. This assumption is further supported by subsequent thermal analysis. The micrometeoroid barrier is a good insulator and will keep the interior of the airlock fairly warm for extended cold soak periods. The exterior will chill down quite rapidly and this is what apparently occurred during the vacuum chamber test. It is therefore reasonable to assume that the outer inch or so of exposed expandable structure was as low as -85° F.

Movies taken of the airlock deployment were analyzed by comparing framing speeds against pressure rise recordings. Results are correlated on Figure 1. The sudden deployment event corresponds to the sharp drop in pressure at approximately 6.0 seconds after start.

From the above evidence, it appears that at least a portion of the expandable structure was in a "semi-frozen" state at the time of deployment. An excessive pressure rise occurred with the airlock restricted to approximately 30 percent of its expanded volume by the trapped folds of material. This pressure finally produced enough force to unwrap the folds but at this point the conversion of pneumatic potential energy to kinetic energy occurred so rapidly that damage to the structure was incurred in the unfolding process.

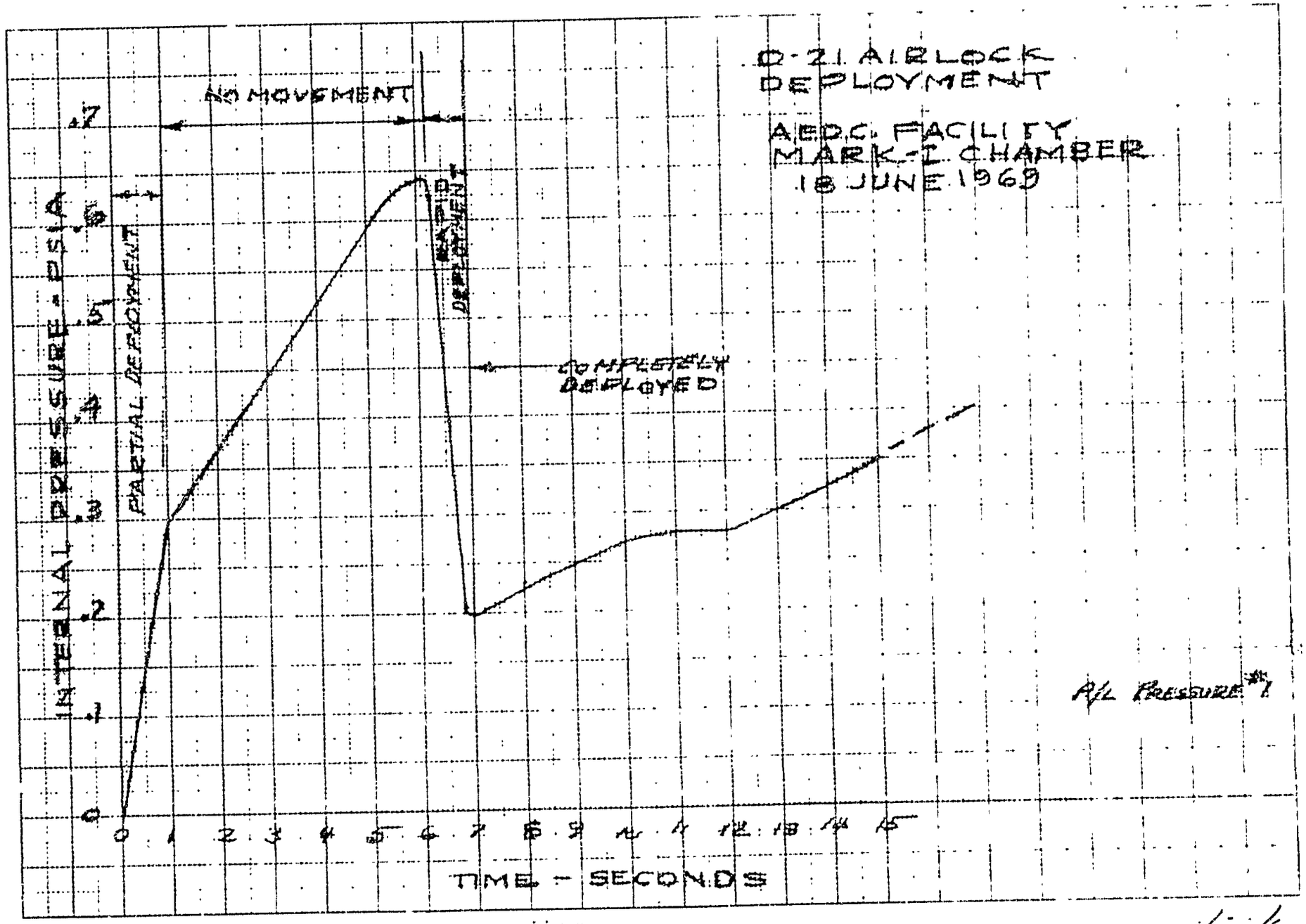
D-21 AIRLOCK
DEPLOYMENT
AEDC FACILITY
MARK-I CHAMBER
18 JUNE 1969
NO MOVEMENT
PARTIAL DEPLOYMENT
RAPID DEPLOYMENT
COMPLETELY DEPLOYED
A/L PRESSURE #7
INTERNAL PRESSURE - PSIA
TIME - SECONDS
0
.1
.2
.3
.4
.5
.6
.7
0 1 2 3 4 5 6 7 8 9 10 11 12 13 14 15

Inspection of the airlock disclosed failure of the filament wound structure in two areas, several areas of delamination of the bladder from the filament wound cage, and a number of rips in the outer cover and micrometeoroid barrier. A typical rupture of the outer surface is shown on Figure 2.

SUBSTANTIATION TESTS

General

In order to add confidence to the accuracy of the above analysis, it was decided to conduct additional low temperature material tests and conduct a deployment test in a vacuum chamber at room temperature.

Low Temperature Material Tests

The results of low temperature tests on the micrometeoroid barrier disclosed an unexpected effect. This data is shown on Figure 3. Originally, the design had been based on 1.0 pcf polyurethane foam for this layer and low temperature verification tests of flexibility had been carried out on composite sections of the airlock structure. Flexibility had been maintained well below -65° F and this temperature was specified for environmental qualification testing. Subsequently, fire retardant characteristics were added to the material requirements as a result of the Apollo fire. At the time, the only polyurethane foam which met the new "self-extinguishing in air" requirement was available only in 2.0 pcf density. An erroneous assumption was made that the low temperature characteristics would be reasonably close to that of the 1 pcf foam. As can be seen from Figure 3, the 2.0 pcf foam is approximately 15 times stiffer in compression modulus at -65° F, whereas the difference is insignificant at room temperature. There appears to be an abrupt change in the stiffness characteristics at -20° F to -25° F.

Sections of the expandable structure using both 1.0 pcf and 2.0 pcf foam were cold soaked to varying temperatures as low as -100° F in the folded state. These were then manually unfolded to determine the degree of stiffness in a qualitative sense. The 1.0 pcf foam section was obviously less stiff at any temperature. Although the

Figure 2. Typical Tear of Outer Cover Caused by Low Temperature Deployment

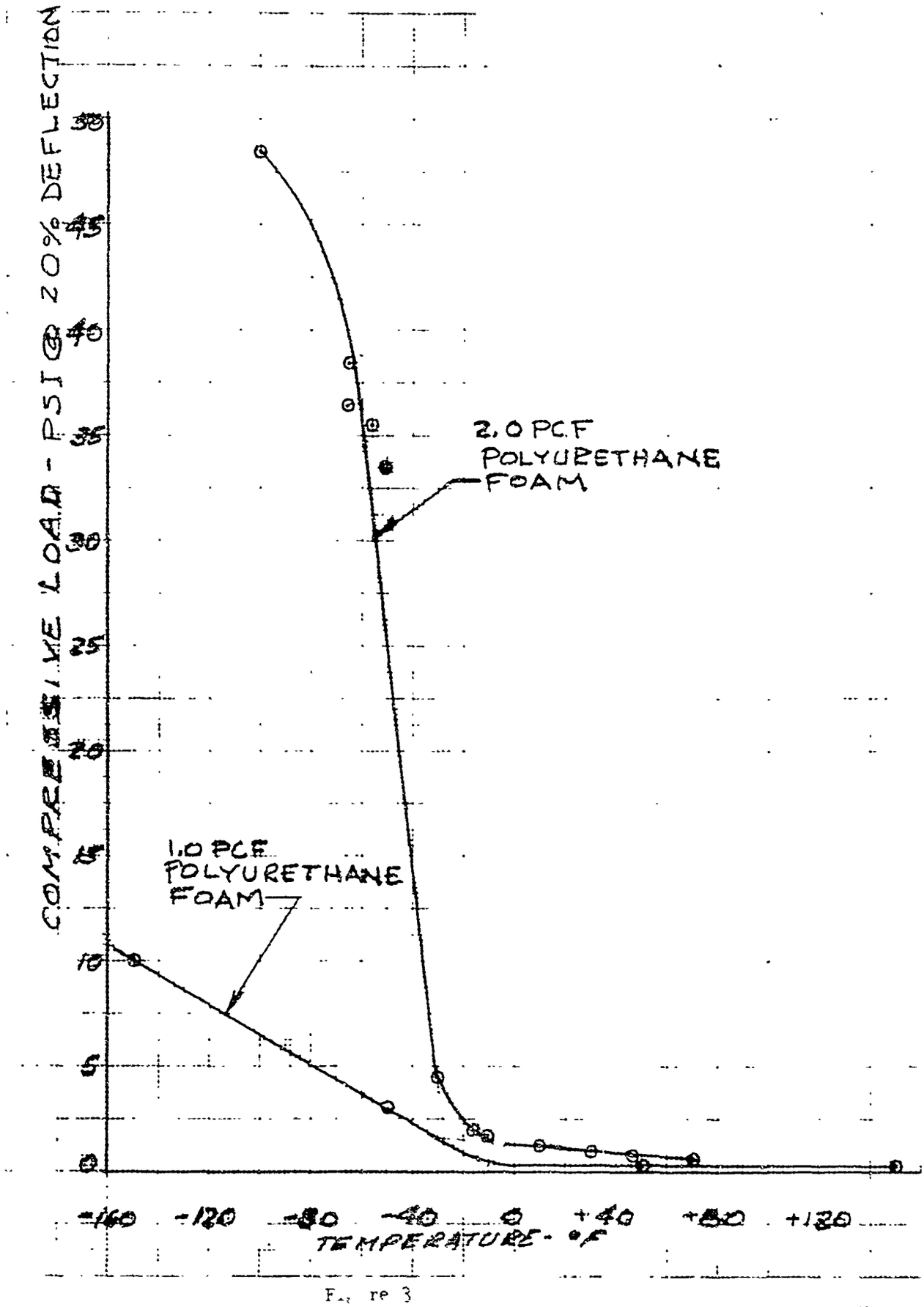
COMPRESSIVE LOAD - PSI @ 20% DEFLECTION
50
45
40
35
30
25
20
15
10
5
0
2.0 PCF POLYURETHANE FOAM
1.0 PCF POLYURETHANE FOAM
-160
-120
-80
-40
0
+40
+80
+120
TEMPERATURE - °F

Figure 3

2.0 pcf foam section did exhibit considerable stiffness increase below -20 F, it did not become brittle or crack under manual manipulation.

Deployment Verification Test

It was considered important to establish whether the locking of the folded material was a result of the low temperature effect on the material or a result of long-term storage in the packaged condition. The crew training unit was selected as the proper test article to determine this. This unit had remained in a packaged state since delivery to Wright Field in October 1968. (Approximately 9 months storage)

The unit was returned to GAC and was tested in the vacuum chamber, 23 June 1969.

A special pressurization system as shown on Figure 4 was connected to the inflation manifold. The reason was to duplicate the design flow discharge rate but to reduce the total capacity of the system to reduce risk of damage if hang up occurred during deployment. A standby system of regulated N_2 was also connected. This system is used to maintain shape during the repressurization of the vacuum chamber.

The unit was also deployed vertically upwards instead of downwards as was the case at AEDC in order to eliminate the benefit of gravity aiding the unfolding of the material. The unit was successfully deployed at a chamber pressure of .02 psia and room temperature. The pressure rise data is shown on Figure 5 together with photographs of the deployment sequence.

The deployment under either room temperature or low temperature environment shows a characteristic pressure peak part way through the deployment cycle. However, this peak for the room temperature case is only one-sixth the value of that for the low temperature deployment. The deployment is also considerably slower with no pronounced hangup of the packaging folds.

CONCLUSIONS

1. The results of the room temperature deployment test definitely establish low temperature as the primary cause for the unsatisfactory deployment at AEDC.

DEPLOYMENT TEST SCHEMATIC

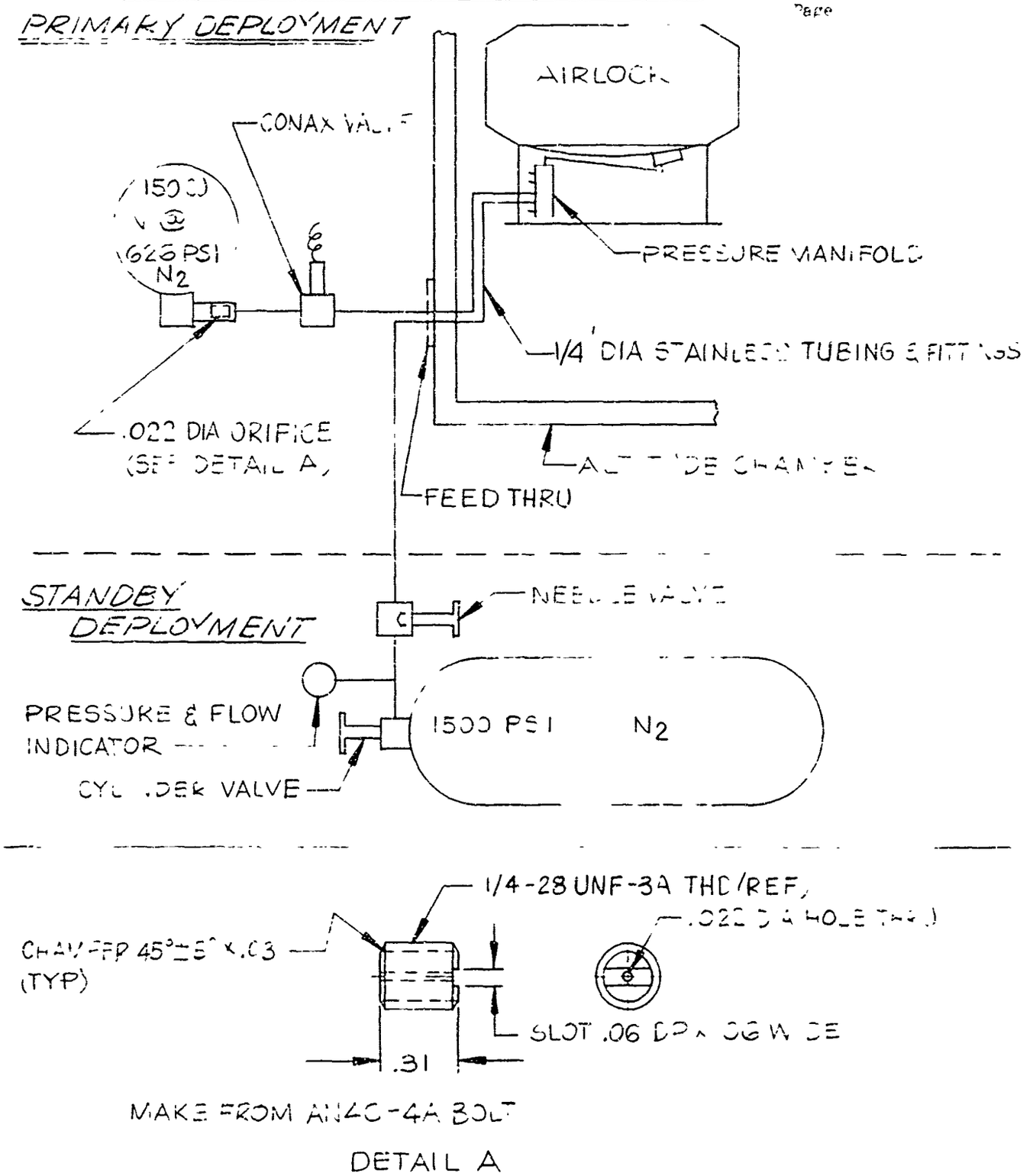

Figure 4

JR 220 (7-63) K&E AKRON 6-66

REF ENGRG PROCEDURE S 017

DATE

REV DATE

REV DATE

GOODYEAR AEROSPACE

PAGE

CODE IDENT NO 25500

AIRLOCK
INTERNAL
PRESSURE

2. Low temperature materials tests establish -20° F as the minimum temperature at which deployment should be attempted with the current airlock structure. (This temperature limitation does not apply after deployment.)

3. A reduction in initial flow rate of the inflation gas could be of some benefit to minimize intermittent deployment effects.

REMEDIAL ACTION BEING TAKEN

1. The airlock in the packaged shape will incorporate a multilayer insulation cover over the expandable structure to maintain orbital temperatures at time of deployment warmer than -20° F. (The thermal blanket effect was analyzed and reported in Reference a.)

2. The airlock pressurization system will be modified to provide a preshaping cycle with a reduced flow rate from a low capacity gas supply. The new system is shown schematically on Figure 6 and the pressure flow characteristics on Figure 7.

3. Additional test thermocouples will be added to the airlock exterior surface which will more accurately establish the expandable structure temperature during deployment tests.

4. The deployment test will be repeated in the GAC vacuum chamber with the airlock cooled to -20° F.

D-21 AIRLOCK
MODIFIED INFLATION & PRESSURIZATION SYSTEM SCHEMATIC

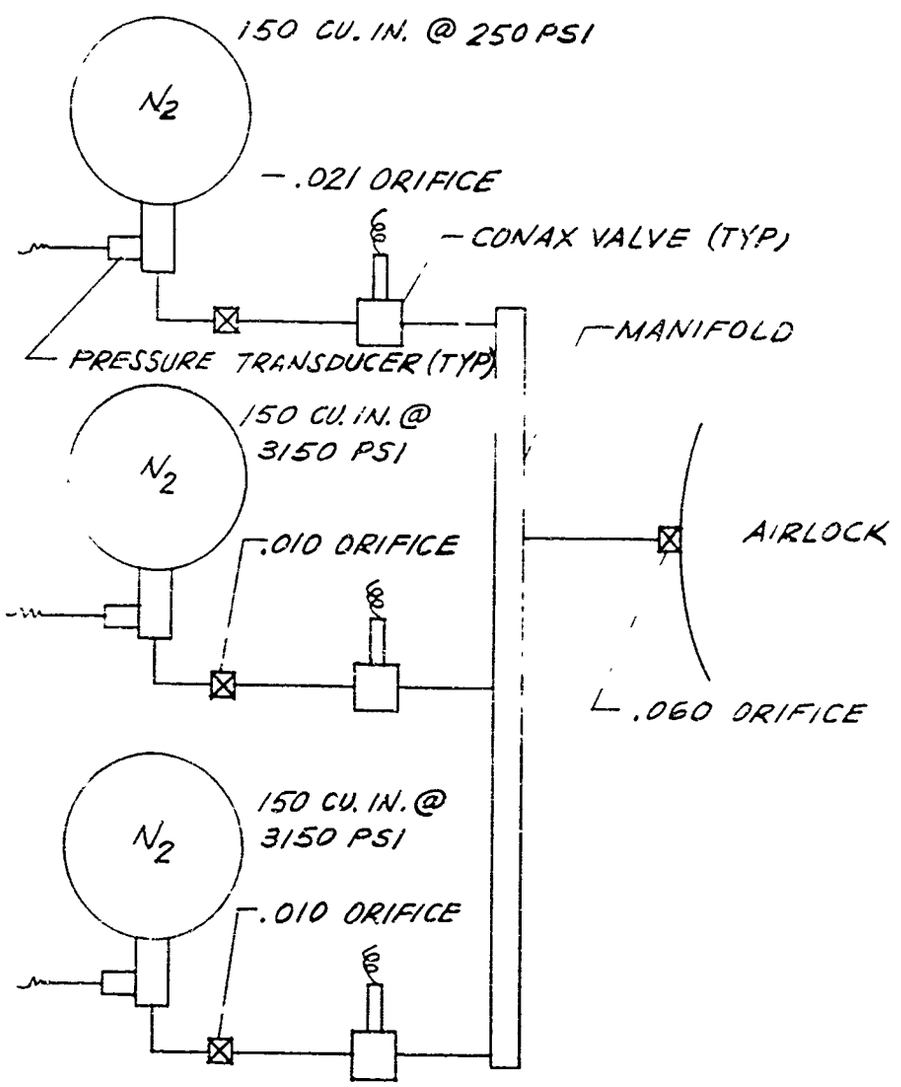

Figure 6

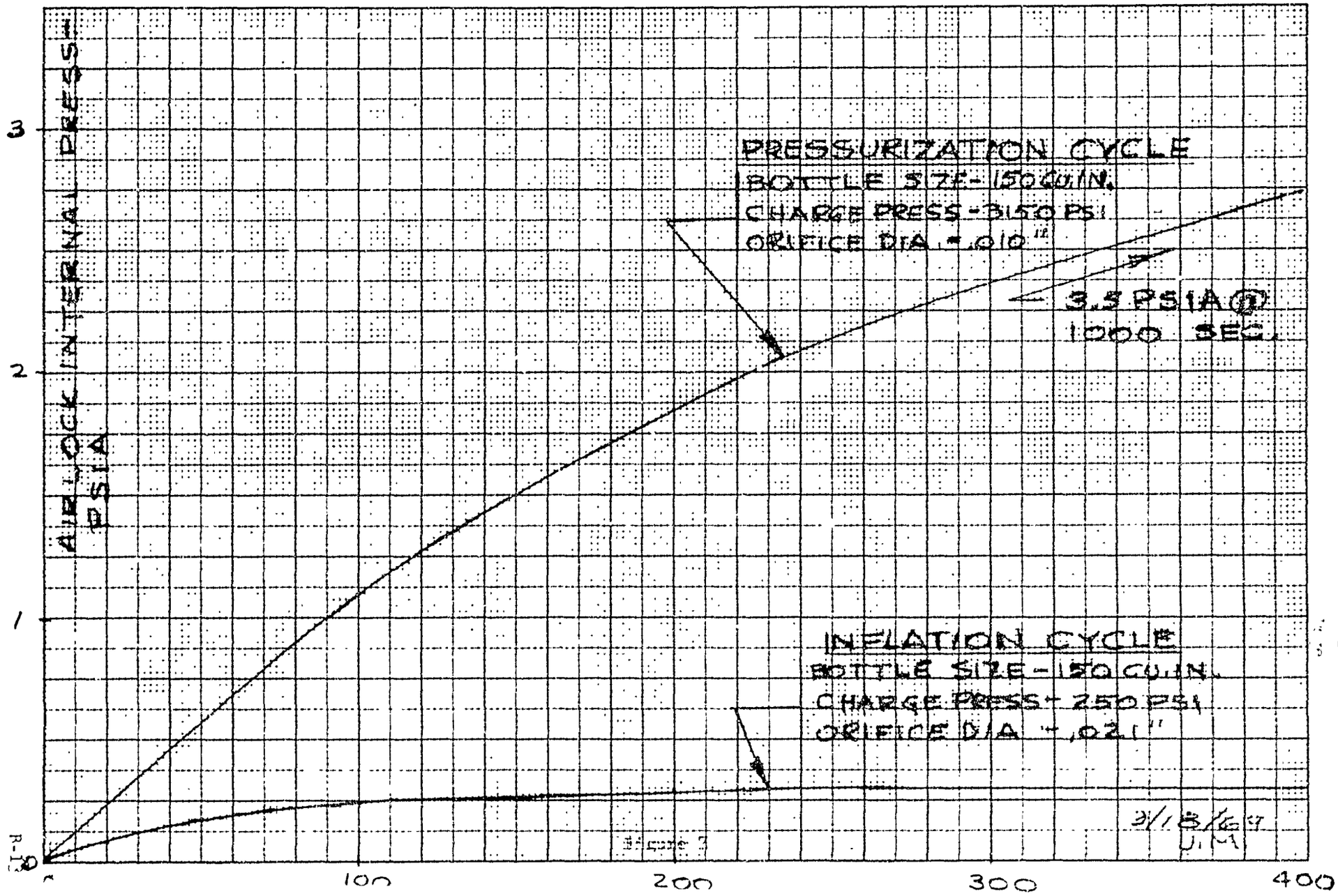
AIR LOCK INTERNAL PRESS
PSIA
3
2
1
0
100
200
300
400
PRESSURIZATION CYCLE
BOTTLE SIZE - 150 CU.IN.
CHARGE PRESS - 3150 PSI
ORIFICE DIA. = .010"
3.5 PSIA @
1000 SEC.
INFLATION CYCLE
BOTTLE SIZE - 150 CU.IN.
CHARGE PRESS - 250 PSI
ORIFICE DIA = .021"
3/18/67

Figure 7

ENGINEERING MEMORANDUM

4 September 1969
SP-7087

Subject: Thermal Analysis - Effect of Apollo Telescope Mount on D-21 Airlock Location

INTRODUCTION

The new concept of the NASA SIVB "Dry" Workshop includes the Apollo Telescope Mount (ATM) as part of the payload launched with a single Saturn V booster. This arrangement places the current location of the D-21 airlock behind one of the ATM solar cell arrays when the array is deployed. A thermal analysis was made to determine the effect of this shadowing on the airlock temperatures. An alternate location of the airlock between the ATM solar cell arrays was also studied and found to be more favorable. See Figure 1.

SUMMARY

The present location of the D-21 airlock in the shadow of the ATM solar array imposes severe extremes of thermal environment. If a thermal coating with "hot" properties is selected to keep the airlock warm in the shade, it proves to be too hot during those periods the airlock is exposed to the sun prior to ATM deployment or during random orientation periods. A cooler thermal coating which is suitable to control the heat flux in the sun, is found to be too cold to be satisfactory in the shade.

Although this problem exists to some degree regardless of the airlock location, there is a spot between solar cell arrays which has less extreme fluctuations in thermal flux. The D-21 is currently located on the McDonnell Douglas airlock module (AM) Strut No. 3. Relocation of the D-21 airlock to Strut No. 4 of the AM appears practical and will provide a more suitable thermal environment.

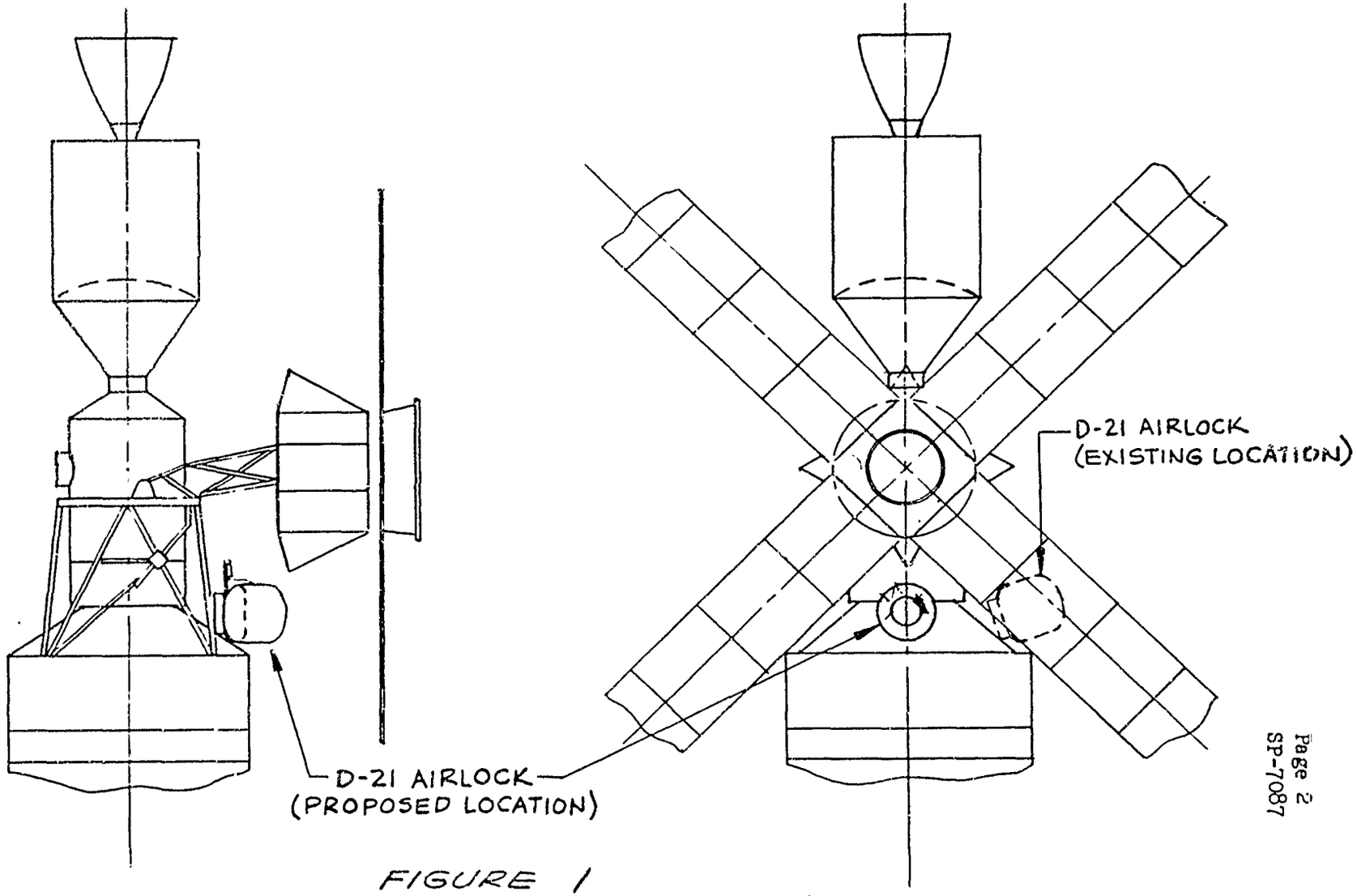

FIGURE 1
PROPOSED AIRLOCK LOCATION

ANALYTICAL APPROACH

The D-21 airlock was simulated thermally as a cube with one side always sun oriented. A heat flux program was established where the total heat flux subjected to each side of the cube was determined. The coordinates of the perpendicular to each surface are inputs to the program and by knowing these values, the relative location of each surface with respect to the sun and earth is known for any position in any desired orbit. Solar, reflected and earth heating effects were computed for 24 locations in a 500-mile orbit having an inclination of 10 degrees. In the temperature calculations, the time increments must be considerably smaller to ensure computational stability, and these values were obtained by linear interpolation between computed points. With the above heat flux program, the study was divided into two separate phases namely; packaged and deployed configurations. The IBM Model 360 digital computer was used for this analysis.

Packaged Configuration - Maximum Temperature Case

The heat fluxes on the sun-oriented side of the cube were used for the maximum temperature calculations. Optical properties for the surface were varied through a range of emissivities from 0.04 to 0.12 and corresponding solar absorptances. The heat fluxes obtained from the orbital heat flux program were modified by these surface properties, then used with a transient one-dimensional temperature program to obtain temperatures through the structure. This program divides any homogeneous material into a number of slabs and by conducting a heat balance on each slab, computes the temperature gradient through the foam structure. For the particular case investigated, 13 slabs were used, 3 for the multi-layer insulation and 10 slabs for the foam varying in thickness from 1/8 inch to 1/2 inch giving a total thickness of 2-7/8 inches. The results of this run (with the final coating) are shown in Figure 2 where temperature (1) is the outside surface of the thermal blanket and temperature (4) is the surface of the foam structure adjacent to the protective multi-layer insulation.

Packaged Configuration - Minimum Temperature Case

For the minimum temperature case, the same optical surface properties were assumed to now be on side (3) of the cube and the orbital heat flux program modified

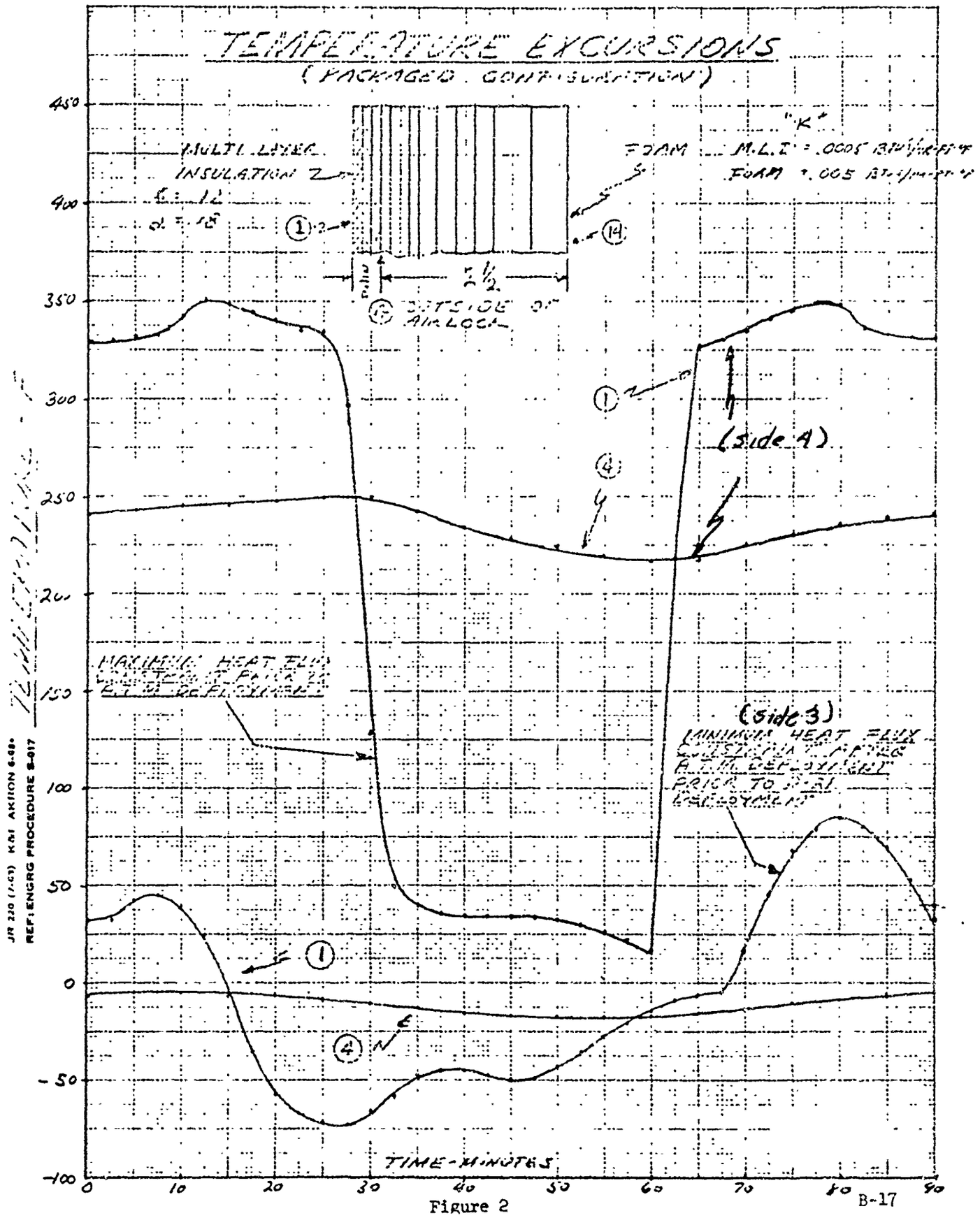
TEMPERATURE EXCURSIONS
(PACKAGED COMBUSTION)
MULTI LAYER INSULATION
FOAM
M.L.I. = .0005 BTU/hr-ft-°F
FOAM = .005 BTU/hr-ft-°F
OUTSIDE OF AIRLOCK
(Side A)
(Side B)
MAXIMUM HEAT FLUX
MINIMUM HEAT FLUX
TIME-MINUTES
450
400
350
300
250
200
150
100
50
0
-50
-100
0
10
20
30
40
50
60
70
80
90

Figure 2

accordingly. (See Figure 3 for cube identification) Side (3) is assumed to receive the minimum overall heat flux. Sides (2) and (5) actually are subjected to a lesser heat flux based on solar, reflected and earth heating but are expected to be warmer due to effects of the surrounding structure. The re-radiation of sides (2) and (5) will be reduced since these surfaces will be viewing a much warmer surface than absolute zero. No study was made to determine these effects since the properties and pertinent information on the structure is unknown and it is expected that side (3) will be the surface receiving the minimum heat flux.

Heat fluxes obtained from the above program for side (3) were modified slightly to include the view factor effects of the solar paddles and ATM structure.

A view factor was computed between side (3) and the structure and assuming the structure temperature is constant at 60° F and having a surface emittance of 0.60, the radiation interchange between these surfaces were computed. The multi-slab solution was again used and temperatures obtained for the modified coating and the results are shown on Figure 2.

Deployed Configuration

The thermal model for the deployed configuration was assumed to be a hollow cube with walls one inch thick. The wall of the cube was simulated thermally by the model shown below:

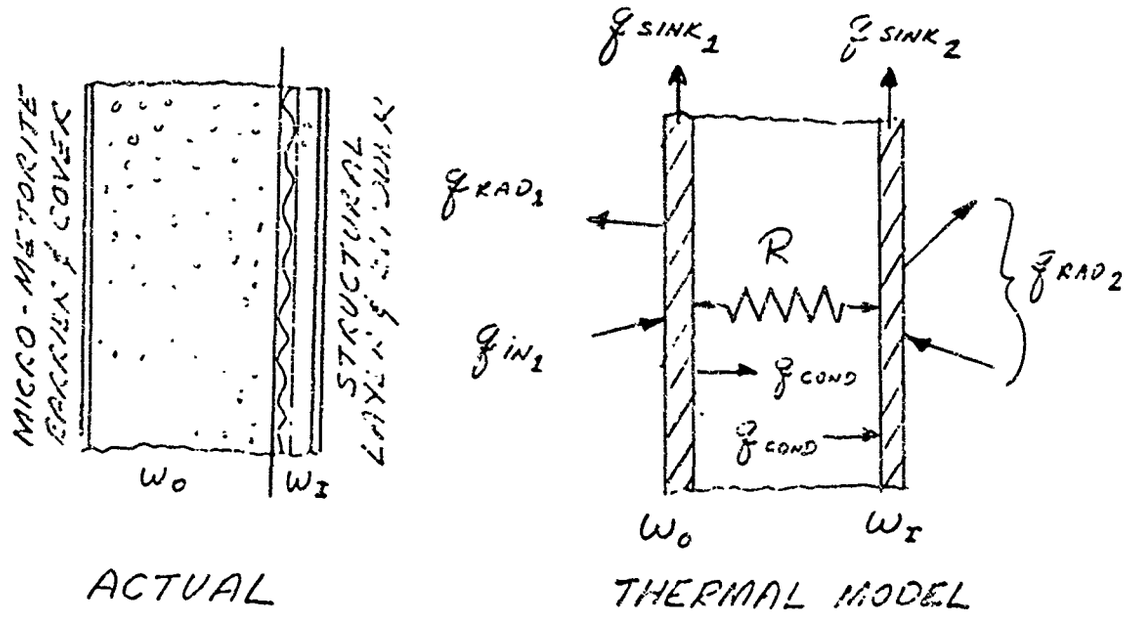

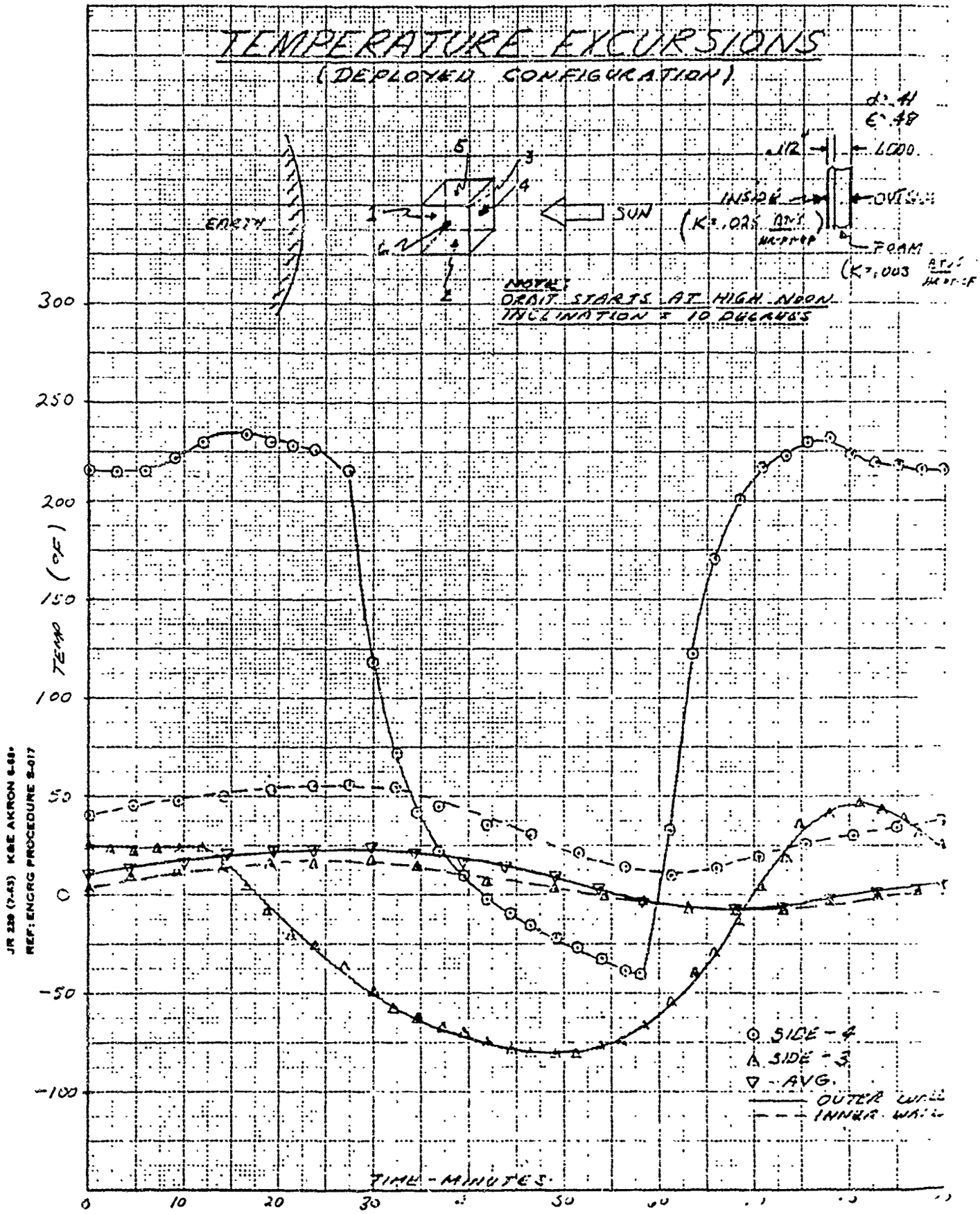
TEMPERATURE EXCURSIONS
(DEPLOYED CONFIGURATION)
EARTH
SUN
1
2
3
4
5
NOTE:
ORBIT STARTS AT HIGH NOON
INCLINATION = 10 DEGREES
INSIDE
OUTSIDE
FOAM
TEMP (°F)
300
250
200
150
100
50
0
-50
-100
SIDE - 4
SIDE - 3
AVG.
OUTER WALL
INNER WALL
TIME - MINUTES
0
10
20
30
50
JR 220 (7-63) K&E AKRON 6-68
REF: ENGRG PROCEDURE 8-017

Figure 3.

A transient temperature analysis was then conducted between each node to obtain inner and outer temperatures. This program calculates the temperatures of all six sides of the cube, and also incorporates internal radiation between surfaces. By knowing the surface properties, materials and heat fluxes on each surface, a time-temperature history can be obtained for each side of the cube throughout the flight.

The D-21airlock configuration is basically a spherical shape and is simulated thermally by a cube. If we look at the radiating area to heating area ratios it can be seen that the cube simulation will yield lower overall temperature results. A spherical shape configuration has a radiating to heating area of 4 compared to 6 for the cube. In order to obtain more realistic answers, we must increase our heating area or decrease our radiation area to more closely simulate the spherical shape. The temperature program was then modified by using the first approach. A sketch is shown below indicating how the heat fluxes were increased to give more realistic results.

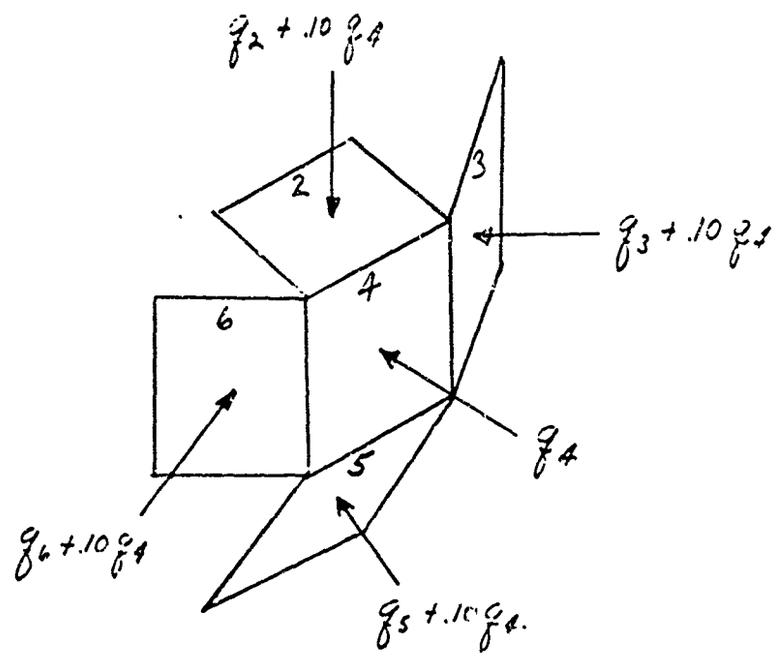

The results of this temperature analysis are shown in Figure 3 where side (4) and side (3) temperatures are shown indicating the maximum and minimum orbital temperatures respectively of the D-21 airlock. Side (4) represents the hatch end and side (3) represents the coldest part of the airlock expandable structure in the sun-orientation mode. The average internal surface temperature is also shown in this figure.

RESULTS

On the basis of materials tests the following temperature limits were established as design criteria.

(1) Outside surface of airlock +275° F Max. -20° F Min.

(2) Outside surface of thermal blanket +350° F Max., -150° F Min.

The thermal analysis indicates that relocation of the D-21 airlock to the NASA Airlock Module (AM) Strut No. 4 position is required to avoid exceeding these design temperature limitations.

The primary problem is selection of a coating which will not degrade the surface materials during the orbital phase prior to ATM deployment and yet be warm enough after ATM deployment and orientation to the sun to allow proper deployment of the D-21 airlock.

The thermal coatings selected as optimum for both the packaged and deployed airlock are defined on Figure 4.

As can be seen from the thermal plots of Figure 2, the maximum temperature that the outer layer of the thermal blanket will achieve is +350° F prior to deployment of the ATM. The outer surface of the airlock will be kept below +250° F, under these conditions. After ATM deployment and orientation to the sun, the D-21 airlock minimum temperature will be no less than -15° F. (The micrometeoroid barrier material of the airlock increases rapidly in stiffness as the temperature is lowered below -20° F.) The outer surface of the insulative blanket will of course cycle from from a maximum of +350° F to a minimum of -75° F, during this period but low temperature

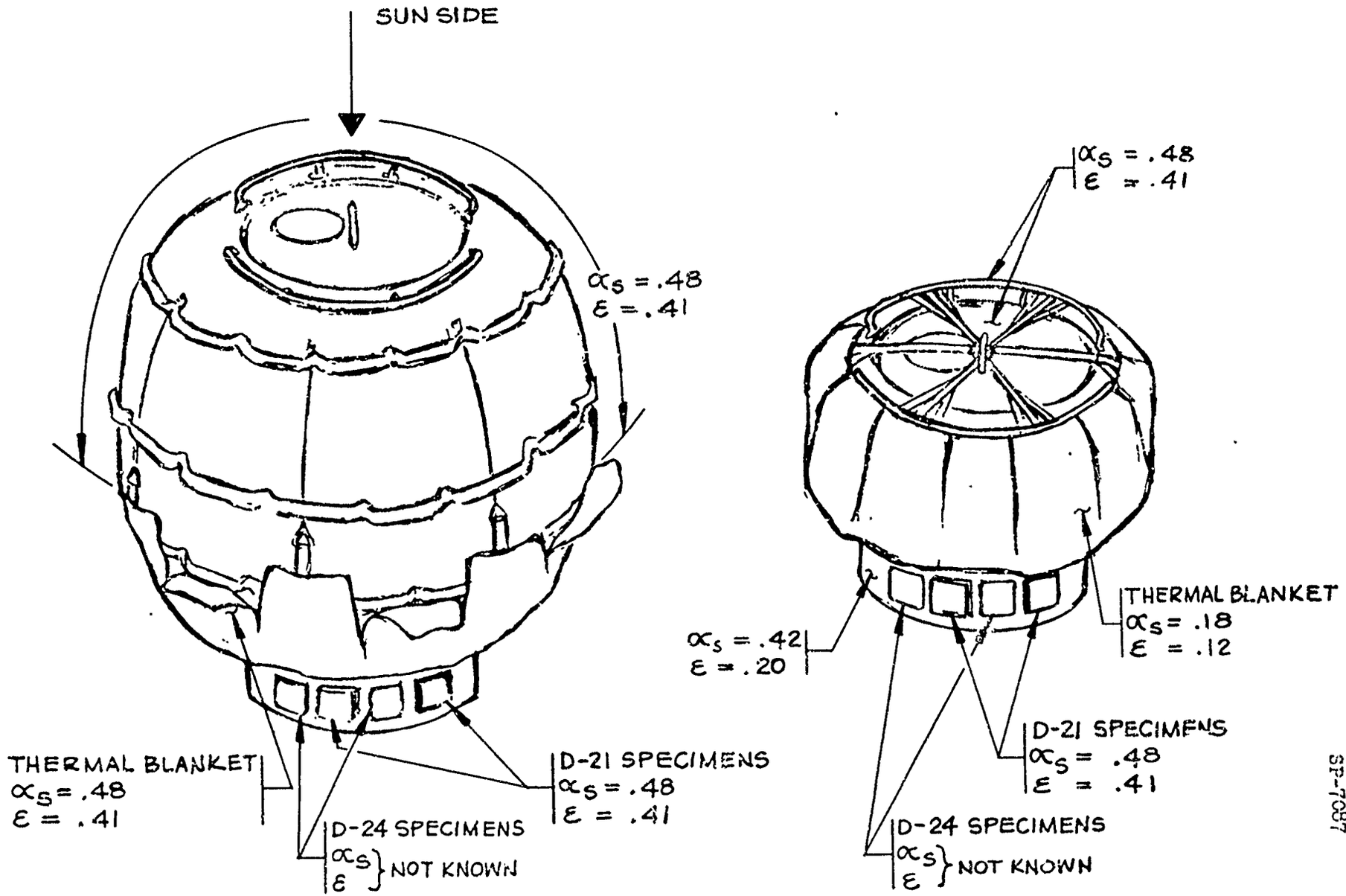

FIGURE 4

DEPLOYED & PACKAGED THERMAL PROPERTIES

tests show the materials of the super insulation thermal blanket are not subject to increased stiffness even as low as -150° F.

After deployment of the D-21 airlock, the thermal model becomes a hollow shell with internal radiation effects. The results of this analysis are shown on Figure 3. The maximum-minimum temperature of the outer surface ranges from +235° F to -84° F. The inner surface varies from +55° F to -5° F.

For the location behind the solar array of the ATM, there was no single surface coating which would not exceed the limits of +350° F in the sun and also maintain the cold condition above -20° F prior to deployment.

DESIGN APPROACH

The hatch end of the airlock is to be painted with Ball Brothers Incorporated 80U Silicone base paint loaded with aluminum flake pigment to achieve values of α_s = 0.41 and ε = 0.48. The outer layer of the super-insulation blanket will be aluminized mylar laminated to dacron cloth with surface properties of α_s = 0.12, and ε = 0.04. This will be modified by pierced holes to achieve an effective α_s = 0.18, and ε = 0.12. The super insulation will consist of 18 layers of 1/4-mil aluminized mylar separated with dacron cloth.

This should achieve a conductivity of approximately 0.0005 BTU/HR-FT-°R.

The thermal insulation blanket surrounds the expandable materials portion of the airlock prior to deployment and tempers the thermal environment during this period.

After deployment, it lies against the lower surface of the airlock and continues to serve as thermal moderator in this area, although it is no longer required. The remainder of the exposed expandable structure is coated with the same silicone base paint as used on the hatch.

CONCLUSIONS

1. The D-21 airlock should be relocated from its current position on Strut No. 3 of the NASA AM to the Strut No. 4 position in order to provide an acceptable thermal environment. (See Figure 4)

2. A thermal insulation blanket is required to protect the expandable structure section of airlock from extremes of the thermal environment in the packaged state.

3. The thermal blanket is not required after airlock deployment, but it need not be jettisoned.

4. The Qualification Test Program procedures should be revised to reflect realistic thermal environment corresponding to this thermal analysis.

APPENDIX C

WEIGHT ANALYSIS

REFERENCE LETTERS:

A) MOL HOUSTON FIELD OFFICE LETTER TO AFAPL AND AFML DATED 10/27/69

B) MSFC LETTER TO MAJ. GARY MINAR DATED 10/20/69

E-ID-15(7-64)(77-10)
REF: ENGINEERING PROCEDURE S.017

WEIGHT ANALYSIS

Item	Detailed Change Lbs	Net Change Lbs
1. Pressure System Change - Addition of Preshaping		
a) N_2 Gas Supply (Decrease one 150 cu.in. bottle from 2250 psig to 250 psig, increase one 150 cu.in. bottle from 2250 to 3150 psig.)	minus .48	
b) Add One Pressure Transducer	plus .10	
c) Add One Pyrotechnic Gas Valve	plus .23	
d) Add One Set Plumbing and Wiring	plus .15	
		.00
2. Addition of Superinsulating Thermal Blanket	plus 2.50	plus 2.50
TOTAL INCREASE		plus 2.50
Previous Airlock Basic Weight		203.00
New Airlock Basic Weight		205.50
D021 Material Sampled (2) =		.33
D024 Material Thermal Control Samples (2) =		1.20
D021/D024 Sample Return Container (2) =		9.00
Film Magazine 16 MM (2) =		2.00
TOTAL =		218.03
D021/D024 Experiment Requested Control Weight = (Per ICD Discussions 12/8/69)		222.2
RESIDUAL BOGEY =		plus 4.17

REF ENGINEERING PROCEDURE S 017

DEPARTMENT OF THE AIR FORCE
MANNED ORBITING LABORATORY, HOUSTON FIELD OFFICE (OSAF)
NASA MANNED SPACECRAFT CENTER, HOUSTON, TEXAS 77058

Reply to
Attn of: ZR1 (Capt Steinberg/483-3541)

27 OCT 1969

Subject: Experiment Control Weights

To: AFAFL (APG-1/Mr. Forbes)
AFML (MAFE/Mr. Boebel)

Goodyear Aerospace Corp.
ATTN: Mr. Manning

Please note the attached letter. If you find it desirable to increase the weight of your experiment above its control weight (206 lbs. for D021 and 1.5 lbs. for D024), please let us know so that we may apply to MSFC for the increase.

Signed

GARY H. HINAR
Major, USAF
Chief

1 Atch
NASA MSFC ltr PM-MM-DT-110-69,
dated 20 Oct 69

NATIONAL AERONAUTICS AND SPACE ADMINISTRATION
GEORGE C. MARSHALL SPACE FLIGHT CENTER
MARSHALL SPACE FLIGHT CENTER, ALABAMA 35812

IN REPLY REFER TO: MM-AA-SP-110-69

OCT 2 0 1969

TO : Manned Spacecraft Center
Attention: Mr. R. Thompson, KA

Department of the Air Force
Manned Spacecraft Center
Attention: Major Gary Miner, TRI

Langley Research Center
Attention: Mr. H. Clark, Mail Stop 315

Electronic Research Center
Attention: Dr. William Leavitt, TRI

FROM : Manager, Apollo Applications Program, MM-AA-MGR

SUBJECT : Experiment Control Weights

The use of the Saturn V launch vehicle has increased the overall orbital payload capability for the AAP-1 flight.

Due to local structural weight carrying limitations within the carriers, established control weights for experiments will continue in effect.

It is recognized that in certain cases, experiment development costs can be reduced by minimizing design analysis and tests if experiment hardware weight is increased. In these cases, it is requested that the experiment developers submit proposed weight increases to MSFC for evaluation.

Questions concerning the above should be directed to Mr. A. Madyda, MSFC (MM-AA-MS), telephone 453-3182.

ORIGINAL SIGNED BY
LELAND F. BELEW

Leland F. Belew

APPENDIX D

D021 AIRLOCK VACUUM CHAMBER

LOW TEMPERATURE DEPLOYMENT TEST

S-20-5(7-64)(TT-10)
REF: ENGINEERING PROCEDURE S-017

ENGINEERING MEMORANDUM

1 January 1970
SP-7232

Subject: DC21 Airlock Vacuum Chamber Low Temperature Deployment Test

Attachment: (a) Environmental Qualification Test Procedure GER-13088 Rev. C, Page 63a dated September 1969

(b) DTI GA597-30 - Expandable Airlock Deployment Test Plan dated 10 December 1969

PURPOSE

The purpose of the low temperature low pressure deployment test is to demonstrate satisfactory operation of the airlock deployment system under these conditions.

TEST PROCEDURE

The test procedure which was followed is defined in attachment (a). This procedure is essentially identical to that specified in attachment (b) except that the altitude during the test was 150,000 ft instead of 200,000 ft. It is considered that this slight difference in pressure is insignificant in this particular test.

TEST EQUIPMENT

The following test equipment was used to perform the test.

	Item	Model	Serial No.
1.	Digital Voltmeter	NLS MOD451	AF 80092
2.	Power Supply	KEPCO-MOD SC 32-15A	GA38-710-479-7-1 S/N C30194
3.	Igniter Circuit Test	ALINCO MOD 101-5BFC	GFE 15
4.	Manometer	MERIAM MOD A203	L1157 S/N 56751
5.	OSC Power Supply	CEC Type 2-1054	N003598 S/N 14042
6.	Carrier Amp	CEC Type 1-113B	435-1085 S/N 22137

	Item	Model	Serial No.
7.	Carrier Amp	CEC Type 1-113B	435-1084 S/N 134B610
8.	Recorder	Azar LN 69809	L-5478 S/N B-64-48342-1-1
9.	Recorder	Azar LN 69809	G1306 S/N A-60-4849-5
10.	Recorder	Azar LN 69809	G1384 S/N B-64-58602-1-1
11.	Recorder	Honeywell MOD 15305846-24-02-1 -000-015-10-168	S/N X5-R 12150
12.	Pressure Transducer	KP-15	20443
13.	16 MM Motion Picture Camera		
14.	American Research Test Chamber (-100°F to +400°F Temp Range, Atmospheric to 250,000 Ft. Alt.)		

TEST SETUP

The test setup and instrumentation are shown schematically in Figures 1 and 2 Figure 3 shows the location of the airlock integral temperature sensors which were read out on the digital voltmeter.

TEST SEQUENCE

The airlock unit was installed in the vacuum chamber and the instrumentation checked out by 4:30 PM on December 11, 1969. The chamber was set for -10°F and left for an overnight temperature soak. At 8:15 AM on December 12, 1969, the chamber was set to -25°F and by 10:50 AM, the temperatures were in the range of -19°F to -22°F. The chamber was then pumped down. The initial deployment attempt was aborted when the restraint harness did not respond by falling away as expected after release of the retaining mechanism. During repressurization of the chamber, the straps did fall away without any other disturbance. Investigation of the harness release hardware did not disclose

TEST SEQUENCE (Continued)

any defects in the parts, so it was theorized that the straps did not have any residual tension due to lack of resilience in the airlock at the low temperature condition. However, as a precautionary measure the retaining collar clearance was increased by .005 in. to eliminate any possibility of a hangup due to foreign particle binding. (This design change has been released effective on all units.)

By 2:40 PM the collar had been reworked and the temperatures again stabilized to -20°F. By 3:15 PM, the chamber had been pumped down to .02 psia, and the deployment was successfully accomplished. Movies of the sequence were taken through the chamber viewing port.

The airlock was subsequently inspected and found to be in satisfactory condition.

TEST DATA

The airlock internal pressure time history is plotted on Figure 4. A sequence of photographs shows the airlock in various states of deployment on this same plot.

Figure 5 shows the preshaping pressurization bottle pressure versus time.

Figure 6 records the external thermocouple time history during deployment.

The data taken from the integral airlock thermistors located as shown on Figure 3 is listed below.

Four of these are on the outside surface of the airlock and two on the inside surface. When the unit is packaged, these are folded well into the interior of the expandable structure.

TEMPERATURE AT TIME OF DEPLOYMENT

Location	°F
T-1	-5
T-2	-7
T-3	-11
T-4	-10
T-5	+20
T-6	+20

PREPARED BY [illegible]	GOODYEAR AEROSPACE CORPORATION	DTI NO. GA537-30
CHECKED BY [illegible]		TYPE
APPROVED [illegible]	DEVELOPMENTAL TEST INSTRUCTIONS	
DATE REVISED		DATE 10 December 1969

EXPANDABLE AIRLOCK

DEPLOYMENT TEST PLAN

The purpose of the expandable airlock deployment test is to demonstrate deployment sequence of the unit at low temperature (-20 to -25°F) and low pressure (150,000 ft.). The test unit will be the Crew Training Unit (Serial No. 1)

CAUTION: Test unit must be handled with white gloves.

During the test the following data is to be recorded:

A. Temperatures

1. 6 existing thermisters on unit
*2. 3 outside of thermal blanket
*3. 3 inside of thermal blanket on airlock outer cover
4. 1 on hatch
5. 1 on base structure
6. 1 on battery

* Locate in pairs, one inside, one outside

B. Pressures

1. Chamber pressure
2. Airlock internal pressure transducer
3. Bottle pressure transducer
4. Airlock internal pressure (some means other than unit transducer)

C. Motion Pictures - Wide angle lens is required
Camera speed to be 64 fps

The low pressure bottle is to contain an 0.021 inch orifice and is to be charged to 250 psi.

The unit is to be cold soaked at -25° F until all thermocouples generally reach -20° F, at which time pumpdown will commence. During the cold soak the battery heaters will be off. Prior to pump-down the battery heaters will be turned "ON" and left on for the remainder of the test.

13.0 LOW PRESSURE AND LOW TEMPERATURE DEPLOYMENT

13.1 Purpose

The purpose of the low pressure and low temperature deployment test is to demonstrate satisfactory operation of the deployment mechanism under these conditions.

13.2 Test Equipment

The following equipment or equivalent will be used for the performance of the deployment test:

(1) American Research Test Chamber

Temperature Range	-100° F to +400° F
Pressure	Atmospheric to 250,000 ft.
Relative Humidity	20 to 95%
Calibration Period	3 months

(2) Two (2) Azar strip chart recorders

Calibration Period	3 months

(3) Two (2) Brown Multi-Channel Temperature recorders

Calibration Period	3 months

(4) One (1) 16 mm motion picture camera

13.3 Test Setup and Procedure

The expandable airlock will be instrumented with approximately sixteen thermocouples on the expandable structure and the thermal blanket. The unit will then be packaged and placed in the American Research test chamber. The NASA Airlock Simulator (checkout set) will be connected to the airlock with the output of the two low pressure transducers being recorded on two Azar strip chart recorders. The thermocouples will be connected to the Brown multi-channel temperature recorders.

The temperature in the test chamber will be reduced to -20° F and allowed to stabilize. After stabilization of the temperature has occurred the pressure in the chamber will be reduced to 200,000 feet. During pumpdown the electrical vent valve will be open.

When 200,000-foot altitude is reached the vent valve will be closed. The recorders and the motion picture camera, setup to record the deployment sequence, will be started. The restraint straps will then be released. After release of the restraint straps, the deployment pressure bottle squib will be fired.

13.4 Acceptance Criteria

Upon completion of the deployment test, the airlock must not show any indications of deterioration of materials or construction.

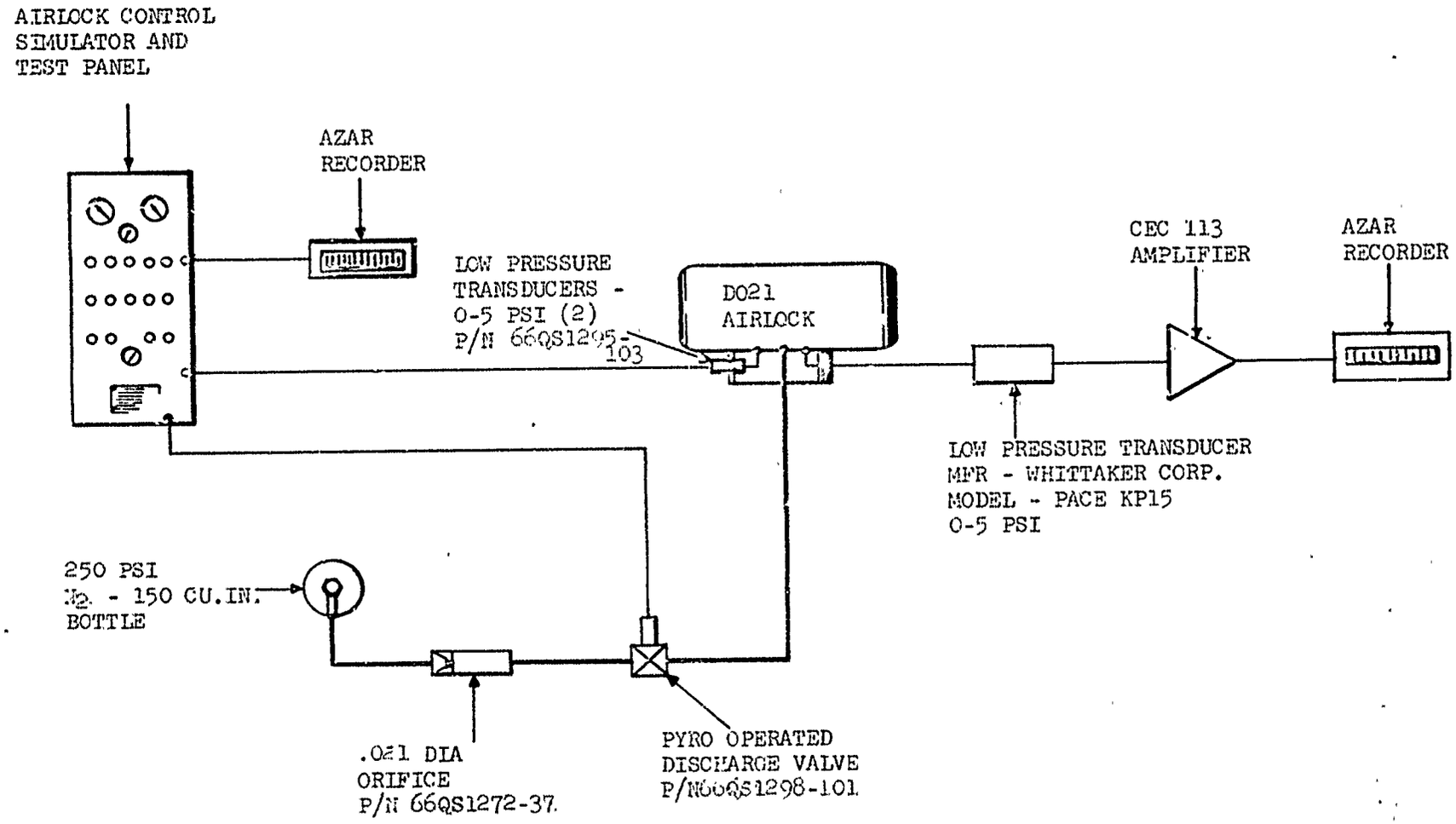

Figure 1. Pressurization System and Instrumentation

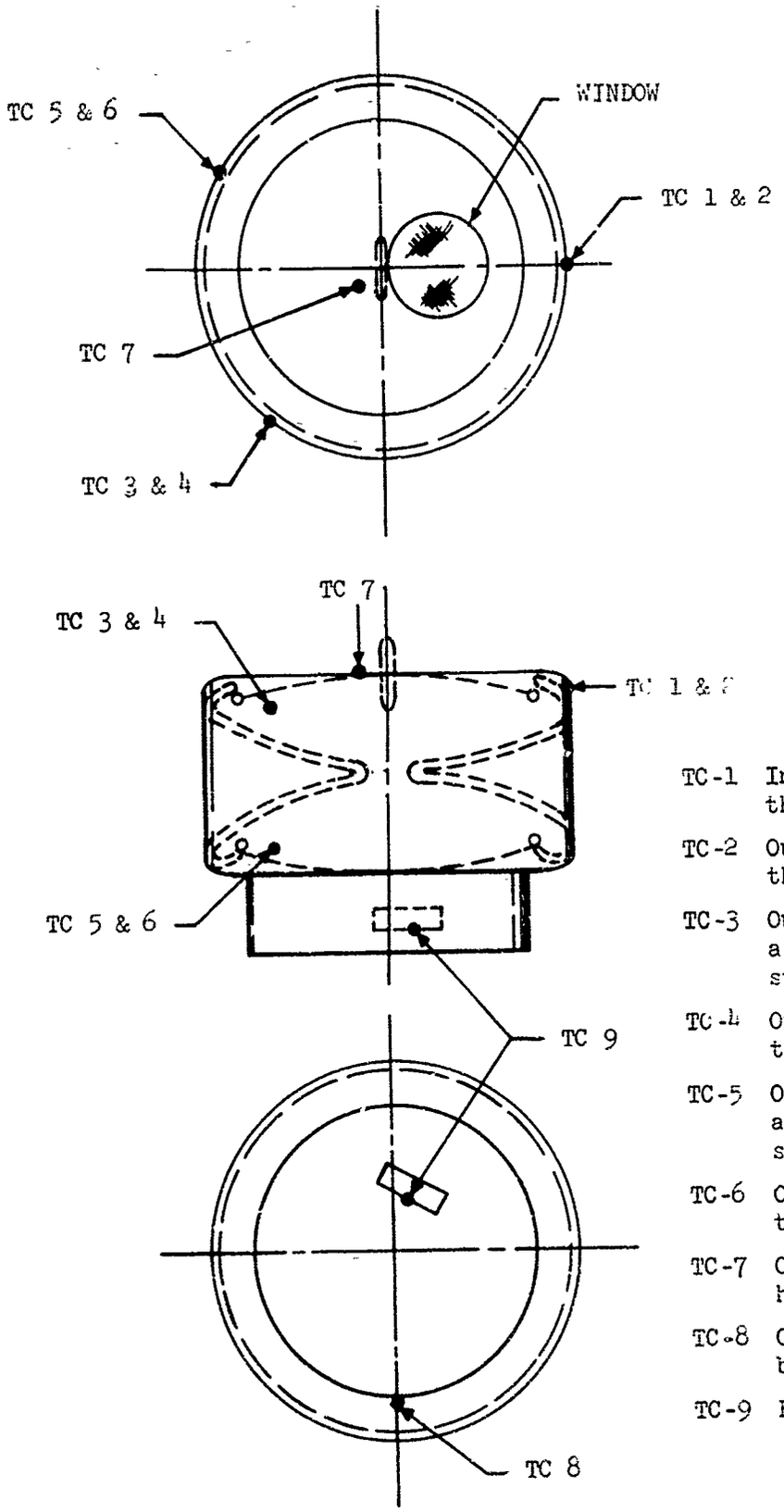

TC-1 Inside surface of thermal blanket.

TC-2 Outside surface of thermal blanket.

TC-3 Outside surface airlock expandable structure.

TC-4 Outside surface of thermal blanket.

TC-5 Outside surface airlock expandable structure.

TC-6 Outside surface of thermal blanket.

TC-7 Outside surface of hatch.

TC-8 Outside surface of base.

TC-9 Battery case surface.

Figure 2. Thermocouple Location - Special Test Thermocouples

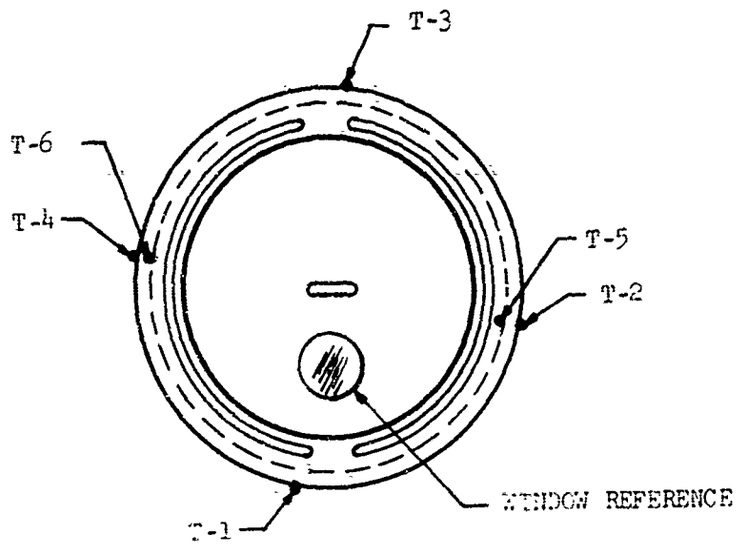

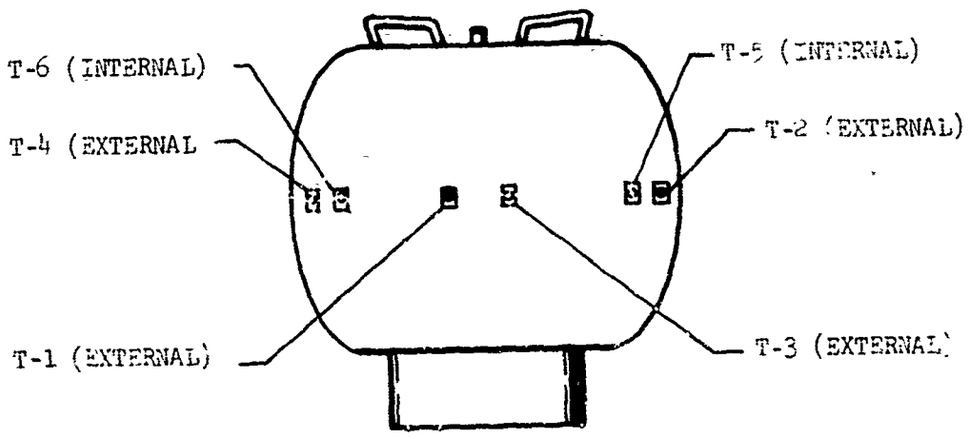

Figure 3. Airlock Integral Temperature Sensors

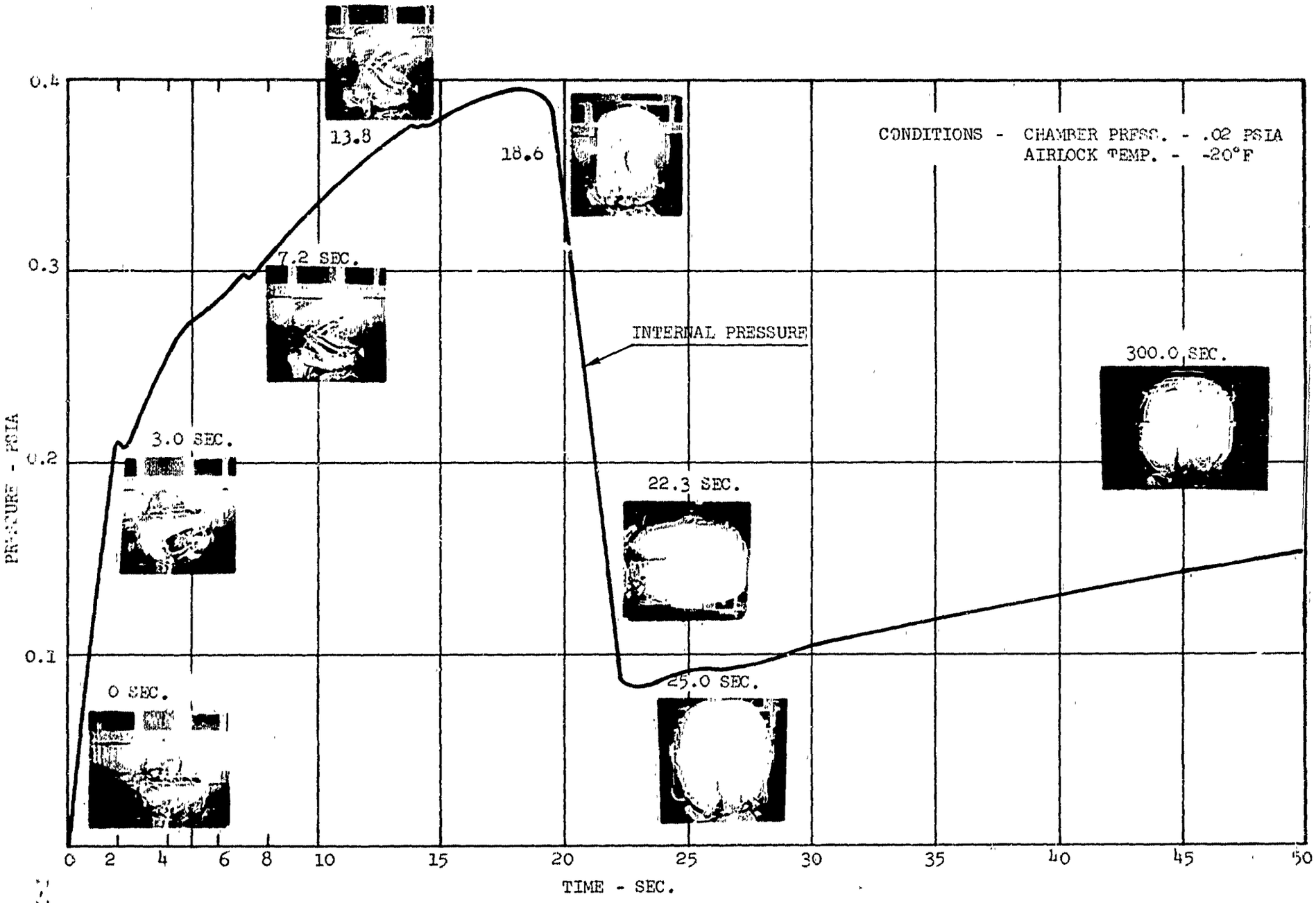

Figure 4. D021 Airlock Deployment

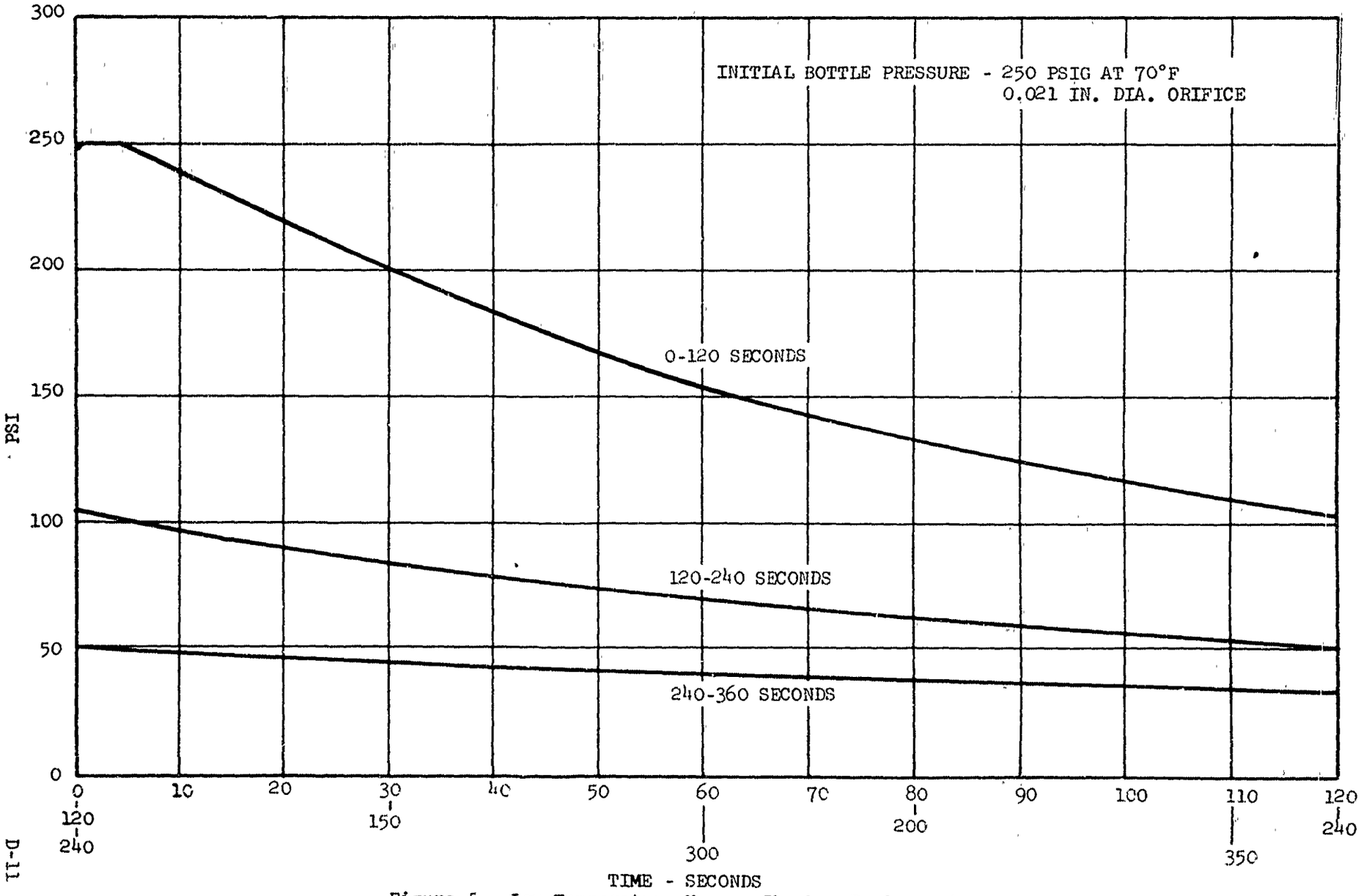

Figure 5. Low Temperature Vacuum Chamber Deployment - Internal Pressure of Preshaping Bottle

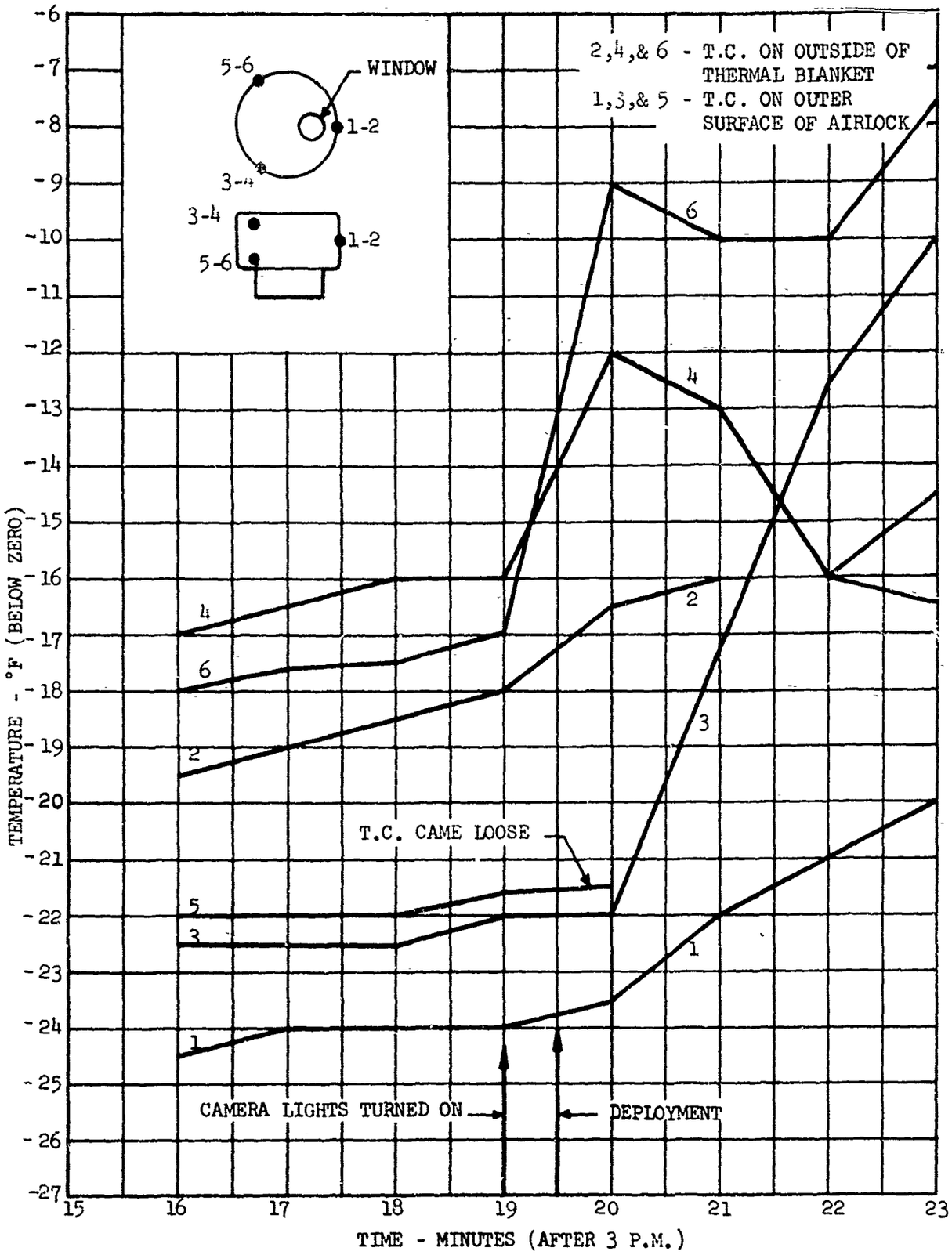

Figure 6. D-21 Airlock Low Temperature Vacuum Chamber Deployment