UNCLASSIFIED

AD NUMBER

AD865352

NEW LIMITATION CHANGE

TO

Approved for public release, distribution unlimited

FROM

Distribution authorized to U.S. Gov't. agencies and their contractors; Critical Technology; 04 DEC 1969. Other requests shall be referred to Air Force Cambridge Research Labs., Bedford, MA.

AUTHORITY

AFCRL ltr, 22 Dec 1971

THIS PAGE IS UNCLASSIFIED

AD 865352

AFCRL-70-0020

FR 69-14-1312

135

THEORETICAL INVESTIGATION OF ACOUSTIC SURFACE WAVES ON PIEZOELECTRIC CRYSTALS

by

William R. Jones
James J. Campbell
Sonja L. Veilleux

Hughes Aircraft Company
Ground Systems Group
P.O. Box 3310
Fullerton, California 92634

Contract No. F19628-69-C-0132
Project No. 5635
Task No. 563503
Work Unit No. 56350301

FINAL REPORT

Period Covered: 1 December 1968 through 30 November 1969

4 December 1969

Contract Monitor: Andrew J. Slobodnik, Jr., 1/Lt, USAF
Microwave Physics Laboratory

This document is subject to special export controls and each transmittal to foreign governments or foreign nationals may be made only with prior approval of Andrew J. Slobodnik, AFCRL (CRDP), L. G. Hanscom Field, Bedford, Massachusetts 01730.

Prepared for

AIR FORCE CAMBRIDGE RESEARCH LABORATORIES
OFFICE OF AEROSPACE RESEARCH
UNITED STATES AIR FORCE
BEDFORD, MASSACHUSETTS 01730

Reproduced by the
CLEARINGHOUSE
for Federal Scientific & Technical
Information Springfield Va. 22151

FEB 23 1970

THEORETICAL INVESTIGATION OF ACOUSTIC SURFACE WAVES ON PIEZOELECTRIC CRYSTALS

by

William R. Jones
James J. Campbell
Sonja L. Veilleux

Hughes Aircraft Company
Ground Systems Group
P.O. Box 3310
Fullerton, California 29634

Contract No. F19628-69-C-0132
Project No. 5635
Task No. 563503
Work Unit No. 56350301

FINAL REPORT

Period Covered: 1 December 1968 through 30 November 1969

4 December 1969

Contract Monitor: Andrew J. Slobodnik, Jr., 1/Lt, USAF
Microwave Physics Laboratory

This document is subject to special export controls and each transmittal to foreign governments or foreign nationals may be made only with prior approval of Andrew J. Slobodnik, AFCRL (CRDP), L. G. Hanscom Field, Bedford, Massachusetts 01730.

Prepared for

AIR FORCE CAMBRIDGE RESEARCH LABORATORIES
OFFICE OF AEROSPACE RESEARCH
UNITED STATES AIR FORCE
BEDFORD, MASSACHUSETTS 01730

ABSTRACT

This report describes the analyses of several piezoelectric and pure elastic surface wave propagation problems and computer programs which implement their numerical study. In addition, the formal analysis of an electric current line source located above a piezoelectric crystal half space is presented in some detail.

TABLE OF CONTENTS

Section		Page
I.	INTRODUCTION	1
II.	PROPAGATION OF SURFACE WAVES ON PIEZOELECTRIC SUBSTRATES	5
	1. Surface Waves on Piezoelectric Crystals in the Presence of Infinitesimally Thin Electric and "Magnetic" Conductors	5
	2. Surface Waves on Non-Piezoelectric (Pure Elastic) Media	19
	3. Degenerate Cases – Piezoelectric Medium	20
	4. Degenerate Cases – Non-Piezoelectric (Pure Elastic) Medium	27
	5. Surface Wave Propagation in an Isotropic Elastic, Perfectly Conducting Film on a Piezoelectric Substrate	28
	6. Surface Wave Propagation at the Interface Between a Piezoelectric Substrate and a Semi-infinite Fluid Medium	30
	7. Surface Wave Propagation in an Isotropic Elastic Film on a Piezoelectric Substrate	36
III.	ANALYSIS OF AN ELECTRIC CURRENT LINE SOURCE ABOVE A PIEZOELECTRIC HALF-SPACE	45
IV.	COMPUTER PROGRAM OUTLINES	53
	1. Surface Waves on Piezoelectric Crystals in the Presence of Infinitesimally Thin Elastic and "Magnetic" Conductors	53
	2. Surface Waves at the Boundary Between a Fluid Medium and Piezoelectric Crystal – Program Description	85
	3. Isotropic, Elastic, Dielectric Layer on Piezoelectric Substrate -- Program Description	106
APPENDIX I.	ELEMENTS OF THE $\hat{L}$ MATRIX FOR THE ELASTIC-CONDUCTOR PIEZOELECTRIC SUBSTRATE PROBLEM	143

Section		Page
APPENDIX II.	EXPLICIT FORMS OF THE ELEMENTS OF THE MATRIX M ASSOCIATED WITH THE FLUID MEDIUM PIEZOELECTRIC SUBSTRATE PROBLEM	145
APPENDIX III.	ELEMENTS OF THE $\hat{L}$ MATRIX FOR THE ELASTIC LAYER PIEZOELECTRIC SUBSTRATE PROBLEM . .	147
APPENDIX IV.	EXPLICIT FORMS OF THE POLYNOMIAL COEFFICIENTS A_k	151
APPENDIX V.	COMPUTER PROGRAMS	155
REFERENCES		249

I. INTRODUCTION

This report describes the analyses of several piezoelectric and pure elastic surface wave propagation problems and computer programs which implement their numerical study. In addition, the formal analysis of an electric current line source located above a piezoelectric crystal half space is presented in some detail.

The physical configurations of the propagation problems considered in the sequel are shown in Figure 1 and are enumerated below:

(1) Surface wave propagation on a piezoelectric half space in the presence of an infinitesimal electric or "magnetic" conductor located at an arbitrary but fixed distance h above the crystal surface.

(2) Surface wave propagation on a piezoelectric or pure elastic half space contiguous to a perfect isotropic elastic conductor (e.g. gold or aluminum) of arbitrary thickness h.

(3) Surface wave propagation on a piezoelectric or pure elastic half space contiguous to a perfect fluid half space.

(4) Surface wave propagation on a piezoelectric or pure elastic half space contiguous to an isotropic elastic layer of arbitrary thickness h.

The following section contains the details of the analyses of the propagation problems described above including special degenerate cases which are encountered. These cases correspond to conditions of surface wave propagation wherein one or more components of displacement vanish or the electric and mechanical fields become decoupled (in the general piezoelectric case the surface wave contains all components of displacement and is coupled via the piezoelectric constants to the electric field). In practice degenerate cases have been found to occur when the sagital plane lies either in a plane of symmetry of the crystal under consideration, in the basal plane of crystals of class 6 mm, or in the principal plane(s) of cubic crystals.

(1)

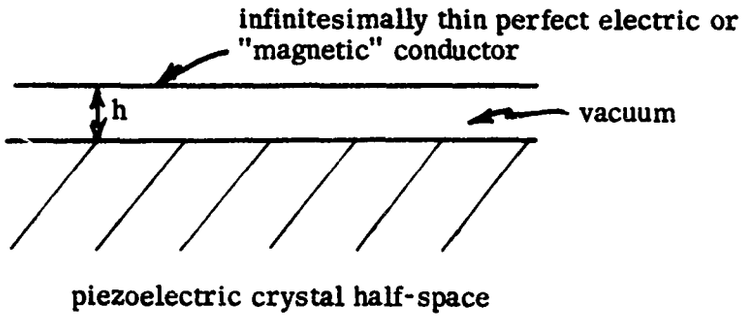

(2)

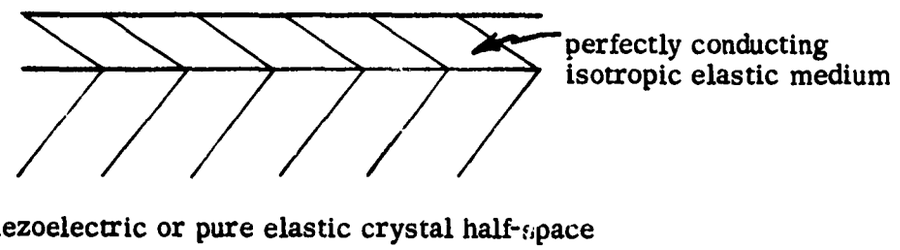

(3)

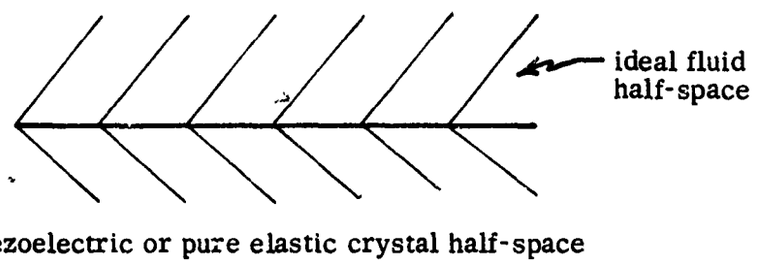

(4)

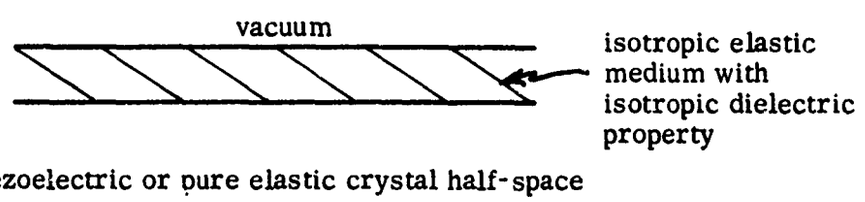

Figure 1

The third section presents an outline of the analysis pertaining to the excitation of surface and bulk wave by an electric current line source located above a piezoelectric half space. This problem was originally undertaken as an approach to the study of interdigital electric transducers but was ultimately abandoned due to lack of funds and the fact that inordinant amounts of computation would be required to extract useful data regarding the efficiency of excitation of surface waves.

Finally, Section II provides detailed descriptions of the computer programs written to implement the numerical analyses of the surface wave propagation problems described in Section II. The material presented in this section provides the reader with sufficient information for the use of the computer programs and the comprehension of the programming methods employed therein. Source deck listings for the various programs are also provided.

II. PROPAGATION OF SURFACE WAVES ON PIEZOELECTRIC SUBSTRATES

1. Surface Waves on Piezoelectric Crystals in the Presence of Infinitesimally Thin Electric and "Magnetic" Conductors

In this section the formal analysis is presented for the propagation characteristics of surface waves on a general piezoelectric crystal surface in the presence of perfect electric and "magnetic" conductors. The geometries under consideration are depicted in Figure 2.

A rectangular coordinate system is chosen with the x_3 axis normal to the crystal surface and the x_1 axis in the direction of propagation. Arbitrary orientations of the crystal surface with respect to the crystal axes are considered. This is accomplished by means of a coordinate rotation through the Euler angles from the crystal axes to the desired x_1, x_2, x_3 coordinate system. The matrix defining such a rotation is given by

$$V = \begin{pmatrix} \cos\alpha\cos\gamma - \sin\alpha\cos\beta\sin\gamma & \sin\alpha\cos\gamma + \cos\alpha\cos\beta\sin\gamma & \sin\beta\sin\gamma \\ -\cos\alpha\sin\gamma - \sin\alpha\cos\beta\cos\gamma & -\sin\alpha\sin\gamma + \cos\alpha\cos\beta\cos\gamma & \sin\beta\cos\gamma \\ \sin\alpha\sin\beta & -\cos\alpha\sin\beta & \cos\beta \end{pmatrix}$$

where α, β, and γ are the Euler Angles. Since the x_1, x_2, x_3 coordinate system is relative to the crystal surface and direction of propagation, the form of the differential equations for the mechanical displacements and electric potentials in this coordinate system is independent of the surface under consideration. Only the values of the coefficients change with the surface orientation relative to the crystal axes. This is also true of the boundary conditions. Different cuts are thus distinguished only through the transformed tensor quantities involved in coefficients of the differential operators.

In terms of the Euler transformation matrix V, the tensor quantities of interest; viz. the elastic constants ($C_{ijk\ell}$), the piezoelectric constants (e_{ijk}), and the dielectric constants (ϵ_{ij}) are transformed as follows:

$$C'_{ijk\ell} = \sum_{r,s,t,u=1}^{3} V_{ir} V_{js} V_{kt} V_{\ell u} C_{rstu} \quad , \tag{1}$$

$$e'_{ijk} = \sum_{r,s,t=1}^{3} V_{ir} V_{js} V_{kt} e_{rst} \quad , \tag{2}$$

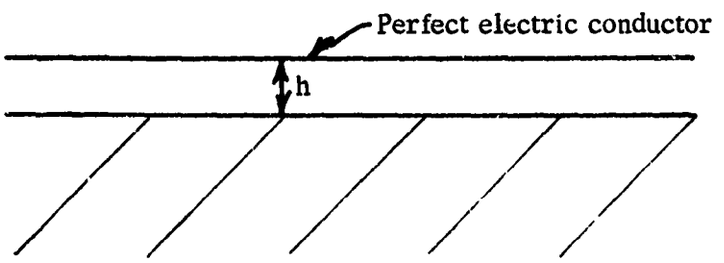

Piezoelectric Crystal Substrate

(a)

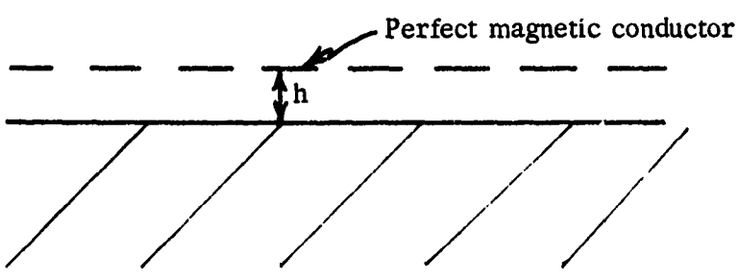

Piezoelectric Crystal Substrate

(b)

Figure 2

$$\epsilon'_{ij} = \sum_{r,s=1}^{3} V_{ir} V_{js} \epsilon_{rs} \quad , \tag{3}$$

where the primed quantities refer to a rotated coordinate system and the unprimed correspond to the coincidence of the $x_1x_2x_3$ coordinate system and the crystal axes, i.e., when V is the identity matrix. The elastic and piezoelectric constants can be reduced to 2 index symbols in the usual fashion, viz. $C'_{ijk\ell} \rightarrow C_{pq}$ and $e'_{ijk} \rightarrow e_{ip}$ where p or q = 1, 2, 3, 4, 5, 6 are equivalent to 11, 22, 33, 23, or 32, 13 or 31, and 12 or 21 respectively.

The differential equations for the components U_i, i = 1, 2, 3, of the mechanical displacement and electric potential φ are given by

$$\left.\begin{aligned} &C'_{ijk\ell} U_{k,\ell i} + e'_{kij} \varphi_{,ki} = \rho \ddot{U}_j \qquad j = 1,2,3 \\ &e'_{ik\ell} U_{k,\ell i} - \epsilon'_{ik} \varphi_{,ki} = 0 \end{aligned}\right\} x_3 > 0 \tag{4}$$

$$\nabla^2 \varphi = 0 \qquad -h \le x_3 \le 0 \quad . \tag{5}$$

In the above equations, indices preceded by a comma denote differentiation with respect to space coordinates. The summation convention for repeated indices is employed as is the dot notation for differentiation with respect to time.

As indicated above, the surface waves under consideration are assumed to be traveling in the x_1 direction along a surface whose normal is in the x_3 direction. The displacements and potentials are considered to be independent of the x_2 coordinate. Consequently, traveling wave solutions of the form

$$U_i = \beta_i \; e^{-\alpha\omega x_3/v_s} \; e^{j\omega(t - x_1/v_s)}$$

and

$$\varphi = \beta_4 \; e^{-\alpha\omega x_3/v_s} \; e^{i\omega(t - x_1/v_s)}$$

are sought. When these surface waveforms (as identified by an exponential decay into the crystal) are substituted into the differential equations for $x_3 > 0$ a linear homogeneous system of four equations in the unknowns $\beta_1, \beta_2, \beta_3, \beta_4$

results. The determinant of the coefficients of the unknowns in these equations must be zero in order that a non-trivial solution exist, that is

$$\det \begin{pmatrix} C_{55}\alpha^2 + 2C_{15}j\alpha - C_{11} + \rho v_s^2 & C_{45}\alpha^2 + [C_{14} + C_{56}]j\alpha - C_{16} & C_{35}\alpha^2 + [C_{13} + C_{55}]j\alpha - C_{15} & e_{35}\alpha^2 + [e_{15} + e_{31}]j\alpha - e_{11} \\ C_{45}\alpha^2 + [C_{14} + C_{56}]j\alpha - C_{16} & C_{44}\alpha^2 + 2C_{46}j\alpha - C_{66} + \rho v_s^2 & C_{34}\alpha^2 + [C_{36} + C_{45}]j\alpha - C_{56} & e_{34}\alpha^2 + [e_{14} + e_{36}]j\alpha - e_{16} \\ C_{35}\alpha^2 + [C_{13} + C_{55}]j\alpha - C_{15} & C_{34}\alpha^2 + [C_{36} + C_{45}]j\alpha - C_{56} & C_{33}\alpha^2 + 2C_{35}j\alpha - C_{55} + \rho v_s^2 & e_{33}\alpha^2 + [e_{13} + e_{35}]j\alpha - e_{15} \\ e_{35}\alpha^2 + [e_{15} + e_{31}]j\alpha - e_{11} & e_{34}\alpha^2 + [e_{14} + e_{36}]j\alpha - e_{16} & e_{33}\alpha^2 + [e_{13} + e_{35}]j\alpha - e_{15} & -\epsilon_{33}\alpha^2 - 2\epsilon_{13}j\alpha + \epsilon_{11} \end{pmatrix} = 0 \tag{6}$$

Evaluation of the above determinant results in an eighth order polynomial in α of the form

$$A_8\alpha^8 + jA_7\alpha^7 + A_6\alpha^6 + jA_5\alpha^5 + A_4\alpha^4 + jA_3\alpha^3 + A_2\alpha^2 + jA_1\alpha + A_o = 0 \quad , \qquad (7)$$

with the coefficients A_n, $n = 0, 1, \ldots, 8$, purely real. Since the fields must be bounded, or go to zero as $x_3 \to \infty$, only the roots with non-negative real parts are allowed. If the unknown in equation (7) is considered to be $j\alpha$ instead of α then the polynomial in $j\alpha$ has purely real coefficients. Thus, either the roots $j\alpha$ are real or occur in conjugate pairs, e.g.

$$j\alpha_1 = a + jb$$

$$j\alpha_2 = a - jb$$

whence

$$\alpha_1 = b - ja$$

$$\alpha_2 = -b - ja \quad .$$

Therefore, the roots α are either pure imaginary or occur in pairs with positive and negative real parts.

In the range of velocities where generally surface waves can exist (i.e. velocities below the lowest bulk wave velocity in the direction of propagation under consideration) the roots occur such that four with positive real parts can be selected. However, if for a given velocity four such roots are not found the possibility of the existence of a degenerate* surface wave remains and must be considered. These special waves are discussed in detail in the section on degenerate cases. Upon obtaining the admissable values of α, corresponding values of β_i (to within a constant factor) can be found for each α.

In addition to the equations for $x_3 > 0$, the differential equation (5) for $-h \le x_3 \le 0$ must be satisfied together with appropriate boundary conditions at $x_3 = 0$ and $x_3 = -h$. Assuming that the crystal surface is stress free ($T_{3j} = 0$ at $x_3 = 0$), the mechanical boundary conditions at each point of the surface of the crystal are

*The term degenerate is used to signify that certain components of displacement and/or the electric potential vanish identically.

$$T_{3j}\Big|_{x_3=0} = C'_{3jk\ell}\, U_{k,\ell} + e'_{k3j}\varphi_{,k}\Big|_{x_3=0} = 0 \quad , \tag{8}$$

$$j = 1, 2, 3 \quad .$$

For the electric wall case (Figure 2a) the boundary conditions on the electric potential are the continuity of φ at $x_3 = 0$ and, without loss of generality, $\varphi(-h) = 0$. Also the normal component of electrical displacement must be continuous across the surface of the crystal.

The total fields (mechanical displacement and potential) may be expressed as a linear combination of the fields associated with the admissible values of α for $x_3 > 0$, namely,

$$U_i = \sum_{\ell=1}^{4} B^{(\ell)} \beta_i^{(\ell)} e^{-\alpha^{(\ell)}\omega x_3/v_s} e^{j\omega(t-x_1/v_s)}, \quad i = 1, 2, 3 \ , \tag{9}$$

$$\varphi = \sum_{\ell=1}^{4} B^{(\ell)} \beta_4^{(\ell)} e^{-\alpha^{(\ell)}\omega x_3/v_s} e^{j\omega(t-x_1/v_s)} \quad . \tag{10}$$

In the region $-h \le x_3 \le 0$ the potential is a solution of Laplace's equation (5). A solution satisfying the continuity condition at $x_3 = 0$ and vanishing at $x_3 = -h$ is

$$\varphi = \sum_{\ell=1}^{4} B^{(\ell)} \beta_4^{(\ell)} \operatorname{csch}\left(\frac{\omega h}{v_s}\right) \sinh\left(\frac{\omega}{v_s}(x_3 + h)\right) e^{j\omega(t-x_1/v_s)} \ , \tag{11}$$

$$-h \le x_3 \le 0 \quad .$$

Finally, the normal component of $\vec{D}$ (viz. D_3) must be continuous across the surface $x_3 = 0$. Inside the crystal the electrical displacement is given by $D_i = e_{ik\ell} U_{k,\ell} - \epsilon_{ik}\varphi_{,k}$, $(i = 1, 2, 3)$, while in the region $-h \le x_3 \le 0$, $\vec{D} = -\epsilon_o \nabla\varphi$.

Substituting the waveforms (9), (10) in equation (8) and expressing the continuity of D_3 at $x_3 = 0$ in terms of equations (9), (10), and (11) yields the following set of homogeneous equations for the amplitudes $B^{(\ell)}$, namely,

$$\sum_{\ell=1}^{4} \Big[\beta_1^{(\ell)} [jC_{15} + \alpha^{(\ell)} C_{55}] + \beta_2^{(\ell)} [jC_{56} + \alpha^{(\ell)} C_{45}] + \beta_3^{(\ell)} [jC_{55} + \alpha^{(\ell)} C_{35}] + \beta_4^{(\ell)} [je_{15} + \alpha^{(\ell)} e_{35}] \Big] B^{(\ell)} = 0 \quad , \tag{12}$$

$$\sum_{\ell=1}^{4} \Big[\beta_1^{(\ell)} [jC_{14} + \alpha^{(\ell)} C_{45}] + \beta_2^{(\ell)} [jC_{46} + \alpha^{(\ell)} C_{44}] + \beta_3^{(\ell)} [jC_{45} + \alpha^{(\ell)} C_{34}] + \beta_4^{(\ell)} [je_{14} + \alpha^{(\ell)} e_{34}] \Big] B^{(\ell)} = 0 \quad , \tag{13}$$

$$\sum_{\ell=1}^{4} \Big[\beta_1^{(\ell)} [jC_{13} + \alpha^{(\ell)} C_{35}] + \beta_2^{(\ell)} [jC_{36} + \alpha^{(\ell)} C_{34}] + \beta_3^{(\ell)} [jC_{35} + \alpha^{(\ell)} C_{33}] + \beta_4^{(\ell)} [je_{13} + \alpha^{(\ell)} e_{33}] \Big] B^{(\ell)} = 0 \quad , \tag{14}$$

$$\sum_{\ell=1}^{4} \Big[\beta_1^{(\ell)} [je_{31} + \alpha^{(\ell)} e_{35}] + \beta_2^{(\ell)} [je_{36} + \alpha^{(\ell)} e_{34}] + \beta_3^{(\ell)} [je_{35} + \alpha^{(\ell)} e_{33}] - \beta_4^{(\ell)} \Big[j\epsilon_{13} + \alpha^{(\ell)} \epsilon_{33} + \epsilon_o \coth\left(\frac{\omega h}{v_s}\right) \Big] \Big] B^{(\ell)} = 0 \quad . \tag{15}$$

The transcendental equation obtained by setting the determinant of the matrix $(\hat{L})$ of coefficients of this system equal to zero determines the surface wave velocities.

In the limiting case $(h \to 0)$ the region $-h \le x_3 \le 0$ disappears and the boundary conditions on the electric potential and normal component of displacement in the crystal are replaced by $\varphi(0) = 0$. In this case equation (15) above reduces to

$$\sum_{\ell=1}^{4} \beta_4^{(\ell)} B^{(\ell)} = 0 \quad . \tag{16}$$

In addition to the electric wall problem, the magnetic wall case (Figure 2b) also has been considered. The only change in the formulation of this problem is the boundary condition at $x_3 = -h$. In this case the solution for the potential in the region $-h \le x_3 \le 0$ assumes the form

$$\phi = \sum_{\ell=1}^{4} B^{(\ell)} \beta_4^{(\ell)} \operatorname{sech}\left(\frac{\omega h}{v_s}\right) \cosh\left(\frac{\omega}{v_s}(x_3 + h)\right) e^{j\omega(t - x_1/v_s)} \quad . \tag{17}$$

This function satisfies the condition that the normal component of electrical displacement (D_3) vanish at the magnetic wall $x_3 = -h$.

Equation (15), the continuity of D_3 at $x_3 = 0$, is modified for the magnetic wall case by replacing $\coth(\omega h/v_s)$ with $\tanh(\omega h/v_s)$. Otherwise the equations (12)-(15) remain unchanged. The limiting case $h \to 0$ requires no special change as it did in the electric wall case since the continuity condition on D_3 at $x_3 = 0$ now simply becomes $D_3 = 0$ and $D_3\big|_{x_3=0} \sim \tanh(\omega h/v_s)$ (outside the crystal), which goes to zero as $h \to 0$. Thus equation (15) with the $\tanh(\omega h/v_s)$ term needs no modification for the limiting case.

Once a surface wave velocity has been found the partial field amplitudes $B^{(j)}$, $j=1,2,3,4$ may be calculated to within a constant factor. Consequently, $B^{(4)}$ is chosen as unity (except for certain degenerate cases described later) and $B^{(1)}$, $B^{(2)}$, $B^{(3)}$ are found from equations (12)-(14). These amplitudes are used to evaluate the displacement components (eq. (9)), electric potential (eq. (10)), the components of stress, strain, electric displacement, electric field, and the time average power flow as functions of ωx_3. The explicit forms of the components of the aforementioned physical quantities are:

Stress

$$\frac{T_{11}}{\omega} = \sum_{\ell=1}^{4} B^{(\ell)} e^{-\alpha^{(\ell)}\omega x_3/v_s} e^{j\omega(t - x_1/v_s)} \left\{ \beta_1^{(\ell)}\left[\frac{-j}{v_s} C_{11} - \frac{\alpha^{(\ell)}}{v_s} C_{15}\right] \right.$$

$$\left. + \beta_2^{(\ell)}\left[\frac{-j}{v_s} C_{16} - \frac{\alpha^{(\ell)}}{v_s} C_{14}\right] + \beta_3^{(\ell)}\left[\frac{-j}{v_s} C_{15} - \frac{\alpha^{(\ell)}}{v_s} C_{13}\right] + \beta_4^{(\ell)}\left[\frac{-j}{v_s} e_{11} - \frac{\alpha^{(\ell)}}{v_s} e_{31}\right] \right\}$$

$$\frac{T_{12}}{\omega} = \frac{T_{21}}{\omega} = \sum_{\ell=1}^{4} B^{(\ell)} e^{-\alpha^{(\ell)}\omega x_3/v_s} e^{j\omega(t - x_1/v_s)} \left\{ \beta_1^{(\ell)}\left[\frac{-j}{v_s} C_{16} - \frac{\alpha^{(\ell)}}{v_s} C_{56}\right] \right.$$

$$\left. + \beta_2^{(\ell)}\left[\frac{-j}{v_s} C_{66} - \frac{\alpha^{(\ell)}}{v_s} C_{46}\right] + \beta_3^{(\ell)}\left[\frac{-j}{v_s} C_{56} - \frac{\alpha^{(\ell)}}{v_s} C_{36}\right] + \beta_4^{(\ell)}\left[\frac{-j}{v_s} e_{16} - \frac{\alpha^{(\ell)}}{v_s} e_{36}\right] \right\}$$

$$\frac{T_{13}}{\omega} = \frac{T_{31}}{\omega} = \sum_{\ell=1}^{4} B^{(\ell)} e^{-\alpha^{(\ell)}\omega x_3/v_s} e^{j\omega(t-x_1/v_s)} \left\{ \beta_1^{(\ell)} \left[\frac{-j}{v_s} C_{15} - \frac{\alpha^{(\ell)}}{v_s} C_{55} \right] \right.$$

$$\left. + \beta_2^{(\ell)} \left[\frac{-j}{v_s} C_{56} - \frac{\alpha^{(\ell)}}{v_s} C_{45} \right] + \beta_3^{(\ell)} \left[\frac{-j}{v_s} C_{55} - \frac{\alpha^{(\ell)}}{v_s} C_{35} \right] + \beta_4^{(\ell)} \left[\frac{-j}{v_s} e_{15} - \frac{\alpha^{(\ell)}}{v_s} e_{35} \right] \right\}$$

$$\frac{T_{22}}{\omega} = \sum_{\ell=1}^{4} B^{(\ell)} e^{-\alpha^{(\ell)}\omega x_3/v_s} e^{j\omega(t-x_1/v_s)} \left\{ \beta_1^{(\ell)} \left[\frac{-j}{v_s} C_{12} - \frac{\alpha^{(\ell)}}{v_s} C_{25} \right] \right.$$

$$\left. + \beta_2^{(\ell)} \left[\frac{-j}{v_s} C_{26} - \frac{\alpha^{(\ell)}}{v_s} C_{24} \right] + \beta_3^{(\ell)} \left[\frac{-j}{v_s} C_{25} - \frac{\alpha^{(\ell)}}{v_s} C_{23} \right] + \beta_4^{(\ell)} \left[\frac{-j}{v_s} e_{12} - \frac{\alpha^{(\ell)}}{v_s} e_{32} \right] \right\}$$

$$\frac{T_{23}}{\omega} = \frac{T_{32}}{\omega} = \sum_{\ell=1}^{4} B^{(\ell)} e^{-\alpha^{(\ell)}\omega x_3/v_s} e^{j\omega(t-x_1/v_s)} \left\{ \beta_1^{(\ell)} \left[\frac{-j}{v_s} C_{14} - \frac{\alpha^{(\ell)}}{v_s} C_{45} \right] \right.$$

$$\left. + \beta_2^{(\ell)} \left[\frac{-j}{v_s} C_{46} - \frac{\alpha^{(\ell)}}{v_s} C_{44} \right] + \beta_3^{(\ell)} \left[\frac{-j}{v_s} C_{45} \frac{-\alpha^{(\ell)}}{v_s} C_{34} \right] + \beta_4^{(\ell)} \left[\frac{-j}{v_s} e_{14} - \frac{\alpha^{(\ell)}}{v_s} e_{34} \right] \right\}$$

$$\frac{T_{33}}{\omega} = \sum_{\ell=1}^{4} B^{(\ell)} e^{-\alpha^{(\ell)}\omega x_3/v_s} e^{j\omega(t-x_1/v_s)} \left\{ \beta_1^{(\ell)} \left[\frac{-j}{v_s} C_{13} - \frac{\alpha^{(\ell)}}{v_s} C_{35} \right] \right.$$

$$\left. + \beta_2^{(\ell)} \left[\frac{-j}{v_s} C_{36} - \frac{\alpha^{(\ell)}}{v_s} C_{34} \right] + \beta_3^{(\ell)} \left[\frac{-j}{v_s} C_{35} - \frac{\alpha^{(\ell)}}{v_s} C_{33} \right] + \beta_4^{(\ell)} \left[\frac{-j}{v_s} e_{13} - \frac{\alpha^{(\ell)}}{v_s} e_{33} \right] \right\}$$

<u>Strain</u>

$$\frac{S_{11}}{\omega} = \sum_{\ell=1}^{4} \frac{-j}{v_s} B^{(\ell)} \beta_1^{(\ell)} e^{-\alpha^{(\ell)}\omega x_3/v_s} e^{j\omega(t-x_1/v_s)}$$

$$\frac{S_{22}}{\omega} = 0$$

$$\frac{S_{33}}{\omega} = \sum_{\ell=1}^{4} \frac{-\alpha^{(\ell)}}{v_s} B^{(\ell)} \beta_3^{(\ell)} e^{-\alpha^{(\ell)}\omega x_3/v_s} e^{j\omega(t-x_1/v_s)}$$

$$\frac{S_{12}}{\omega} = \frac{S_{21}}{\omega} = \frac{1}{2} \sum_{\ell=1}^{4} \frac{-j}{v_s} B^{(\ell)} \beta_2^{(\ell)} e^{-\alpha^{(\ell)}\omega x_3/v_s} e^{j\omega(t-x_1/v_s)}$$

$$\frac{S_{13}}{\omega} = \frac{S_{31}}{\omega} = \frac{1}{2} \sum_{\ell=1}^{4} B^{(\ell)} \left[\frac{-\alpha^{(\ell)}}{v_s} \beta_1^{(\ell)} - \frac{j}{v_s} \beta_3^{(\ell)}\right] e^{-\alpha^{(\ell)}\omega x_3/v_s} e^{j\omega(t-x_1/v_s)}$$

$$\frac{S_{23}}{\omega} = \frac{S_{32}}{\omega} = \frac{1}{2} \sum_{\ell=1}^{4} \frac{-\alpha^{(\ell)}}{v_s} B^{(\ell)} \beta_2^{(\ell)} e^{-\alpha^{(\ell)}\omega x_3/v_s} e^{j\omega(t-x_1/v_s)}$$

<u>Electric Field</u>

$$\frac{E_1}{\omega} = \frac{j}{v_s} \sum_{\ell=1}^{4} B^{(\ell)} \beta_4^{(\ell)} e^{-\alpha^{(\ell)}\omega x_3/v_s} e^{j\omega(t-x_1/v_s)} = \frac{j}{v_s} \varphi$$

$$\frac{E_3}{\omega} = \frac{1}{v_s} \sum_{\ell=1}^{4} \alpha^{(\ell)} B^{(\ell)} \beta_4^{(\ell)} e^{-\alpha^{(\ell)}\omega x_3/v_s} e^{j\omega(t-x_1/v_s)}$$

<u>Electric Displacement</u>

$$\frac{D_1}{\omega} = \sum_{\ell=1}^{4} B^{(\ell)} e^{-\alpha^{(\ell)}\omega x_3/v_s} e^{j\omega(t-x_1/v_s)} \left\{\beta_1^{(\ell)}\left[\frac{-j}{v_s} e_{11} - \frac{\alpha^{(\ell)}}{v_s} e_{15}\right]\right.$$
$$\left. + \beta_2^{(\ell)}\left[\frac{-j}{v_s} e_{16} - \frac{\alpha^{(\ell)}}{v} e_{14}\right] + \beta_3^{(\ell)}\left[\frac{-j}{v_s} e_{15} - \frac{\alpha^{(\ell)}}{v_s} e_{13}\right] - \beta_4^{(j)}\left[\frac{-j}{v_s} \varepsilon_{11} - \frac{\alpha^{(\ell)}}{v_s} \varepsilon_{13}\right]\right\}$$

$$\frac{D_2}{\omega} = \sum_{\ell=1}^{4} B^{(\ell)} e^{-\alpha^{(\ell)}\omega x_3/v_s} e^{j\omega(t-x_1/v_s)} \left\{\beta_1^{(\ell)}\left[\frac{-j}{v_s} e_{21} - \frac{\alpha^{(\ell)}}{v_s} e_{25}\right]\right.$$
$$\left. + \beta_2^{(\ell)}\left[\frac{-j}{v_s} e_{26} - \frac{\alpha^{(\ell)}}{v_s} e_{24}\right] + \beta_3^{(\ell)}\left[\frac{-j}{v_s} e_{25} - \frac{\alpha^{(\ell)}}{v_s} e_{23}\right] - \beta_4^{(\ell)}\left[\frac{-\ell}{v_s} \varepsilon_{21} - \frac{\alpha^{(\ell)}}{v_s} \varepsilon_{23}\right]\right\}$$

$$\frac{D_3}{\omega} = \sum_{\ell=1}^{4} B^{(\ell)} e^{-\alpha^{(\ell)}\omega x_3/v_s} e^{j\omega(t-x_1/v_s)} \left\{\beta_1^{(\ell)}\left[\frac{-j}{v_s} e_{31} - \frac{\alpha^{(\ell)}}{v_s} e_{35}\right]\right.$$
$$\left. + \beta_2^{(\ell)}\left[\frac{-j}{v_s} e_{36} - \frac{\alpha^{(\ell)}}{v_s} e_{34}\right] + \beta_3^{(\ell)}\left[\frac{-j}{v_3} e_{35} - \frac{\alpha^{(\ell)}}{v_s} e_{33}\right] - \beta_4^{(\ell)}\left[\frac{-j}{v_s} \varepsilon_{13} - \frac{\alpha^{(\ell)}}{v_s} \varepsilon_{33}\right]\right\}$$

Power Flow

The flow of complex mechanical power at any point in the piezoelectric medium is given in component form as follows:

$$P_i = -\frac{1}{2} \sum_{\ell=1}^{3} T_{i\ell} \dot{U}_\ell^*$$

The real part of this expression represents the time average power flow at a point.

Since all fields decay exponentially in the x_3 direction there is no net flow of real power in this direction. Thus, only P_1 and P_2 need be considered.

The components of the total time-average power flow are as follows:

$$p_1^t = \int_0^\infty \mathrm{Re}\,[P_1]\, dx_3 = \mathrm{Re}\,[P_1^t]$$

$$p_2^t = \int_0^\infty \mathrm{Re}\,[P_2]\, dx_3 = \mathrm{Re}\,[P_2^t]$$

where $\mathrm{Re}\,[P_{1,2}]$ means the real part of $P_{1,2}$. The final expressions for the complex mechanical power flow P_1^t and P_2^t are

$$\frac{P_1^t}{\omega} = \frac{1}{2} \sum_{\ell=1}^{4} \sum_{k=1}^{4} \frac{1}{[\alpha^{(\ell)} + \alpha^{*(k)}]} B^{(\ell)} B^{*(k)} \Big\{ \beta_1^{*(k)} [\beta_1^{*(\ell)} (C_{11} - j\alpha^{(\ell)} C_{15})$$

$$+ \beta_2^{(\ell)} (C_{16} - j\alpha^{(\ell)} C_{14}) + \beta_3^{(\ell)} (C_{15} - j\alpha^{(\ell)} C_{13}) + \beta_4^{(\ell)} (e_{11} - j\alpha^{(\ell)} e_{31})]$$

$$+ \beta_2^{*(k)} [\beta_1^{(\ell)} (C_{16} - j\alpha^{(\ell)} C_{56}) + \beta_2^{(\ell)} (C_{66} - j\alpha^{(\ell)} C_{46}) + \beta_3^{(\ell)} (C_{56} - j\alpha^{(\ell)} C_{36})$$

$$+ \beta_4^{(\ell)} (e_{16} - j\alpha^{(\ell)} e_{36})]$$

$$+ \beta_3^{*(k)} [\beta_1^{(\ell)} (C_{15} - j\alpha^{(\ell)} C_{55}) + \beta_2^{(\ell)} (C_{56} - j\alpha^{(\ell)} C_{45}) + \beta_3^{(\ell)} (C_{55} - j\alpha^{(\ell)} C_{35})$$

$$+ \beta_4^{(\ell)} (e_{15} - j\alpha^{(\ell)} e_{35})] \Big\}$$

$$\frac{P_2^t}{\omega} = \frac{1}{2} \sum_{\ell=1}^{4} \sum_{k=1}^{4} \frac{1}{[\alpha^{(\ell)} + \overset{*}{\alpha}{}^{(k)}]} B^{(\ell)} \overset{*}{B}{}^{(k)} \Big\{ \overset{*}{\beta}{}_1^{(k)} [\beta_1^{(\ell)}(C_{16} - j\alpha^{(\ell)} C_{56})$$

$$+ \beta_2^{(\ell)}(C_{66} - j\alpha^{(\ell)} C_{46}) + \beta_3^{(\ell)}(C_{56} - j\alpha^{(\ell)} C_{36}) + \beta_4^{(\ell)}(e_{16} - j\alpha^{(\ell)} e_{36})]$$

$$+ \overset{*}{\beta}{}_2^{(k)} [\beta_1^{(\ell)}(C_{12} - \alpha^{(\ell)} C_{25}) + \beta_2^{(\ell)}(C_{26} - j\alpha^{(\ell)} C_{24}) + \beta_3^{(\ell)}(C_{25} - j\alpha^{(\ell)} C_{23})$$

$$+ \beta_4^{(\ell)}(e_{12} - j\alpha^{(\ell)} e_{32})]$$

$$+ \overset{*}{\beta}{}_3^{(k)} [\beta_1^{(\ell)}(C_{14} - j\alpha^{(\ell)} C_{45}) + \beta_2^{(\ell)}(C_{46} - j\alpha^{(\ell)} C_{44}) + \beta_3^{(\ell)}(C_{45} - j\alpha^{(\ell)} C_{34})$$

$$+ \beta_4^{(\ell)} (e_{14} - j\alpha^{(\ell)} e_{34})] \Big\} \quad .$$

The flow of electromagnetic power (Poynting Vector) in a piezoelectric medium requires a knowledge of the magnetic field as well as the electric field. It is a common belief (although an incorrect one) that the complex Poynting vector $E \times H^*$ reduces to $\varphi \dot{D}^*$ when the electric field is approximately derivable from a scalar potential function φ. This mistaken notion is based upon the following derivation for energy flow out of a closed surface.

Maxwell's equations are as follows for fields derivable approximately from a scalar potential function (i.e. where $\vec{E} \cong -\nabla\varphi$) in a non-conducting medium.

$$\nabla \times E = \frac{-\partial B}{\partial t} \cong 0 \qquad \nabla \cdot B = 0$$

$$\nabla \times H = \frac{\partial D}{\partial t} = \dot{D} \qquad \nabla \cdot D = 0$$

Now the flow of power out of any closed surface with a surface normal element $d\vec{s}$ is

$$P = \frac{1}{2} \iint_S (E \times H^*) \cdot d\vec{s}$$

but

$$\iint_S (E \times H^*) \cdot d\vec{s} = \iiint_V \nabla \cdot (E \times H^*)\, dv$$

where the second integral is over the volume enclosed by the surface S. Using

$$\nabla \cdot (E \times H^*) = H^* \cdot \nabla \times E - E \cdot \nabla \times H^* \cong -E \cdot \nabla \times H^*$$

it follows that

$$\frac{1}{2} \iiint_V \nabla \cdot (E \times H^*)\, dv \cong -\frac{1}{2} \iiint_V E \cdot \nabla \times H^*\, dv = \frac{1}{2} \iiint_V (\nabla\varphi \cdot \dot{D}^*) \quad .$$

Furthermore

$$\nabla \cdot (\varphi\dot{D}^*) = \nabla\varphi \cdot \dot{D}^* + \varphi\nabla \cdot (\dot{D}^*) = \nabla\varphi \cdot \dot{D}^*$$

may be used to infer that

$$\frac{1}{2} \iiint_V \nabla \cdot (E \times H^*)\, dv \cong \frac{1}{2} \iiint_V \nabla \cdot (\varphi\dot{D}^*)\, dv$$

$$= \frac{1}{2} \iint_S \varphi\dot{D}^* \cdot d\vec{a} \quad .$$

Therefore

$$P = \frac{1}{2} \iint_S (E \times H^*) \cdot d\vec{s} \cong \frac{1}{2} \iint_S \varphi\dot{D}^* \cdot d\vec{a} \quad .$$

This equation states that the surface integral over a closed surface of $E \times H^*$ is equal to that of $\varphi\dot{D}^*$ or alternately that $\nabla \cdot (E \times H^*) = \nabla \cdot (\varphi\dot{D}^*)$, consequently $E \times H^* = \varphi\dot{D}^* + \vec{A}$ where $\vec{A}$ is some vector whose divergence is zero ($\nabla \cdot A = 0$).

It seems a natural assumption to assume that $\vec{A} = 0$ and that $E \times H^* = \varphi\dot{D}^*$. However, this is not necessarily so as an illustrative example from electromagnetic theory shows.

Consider a surface wave propagating in the free space region

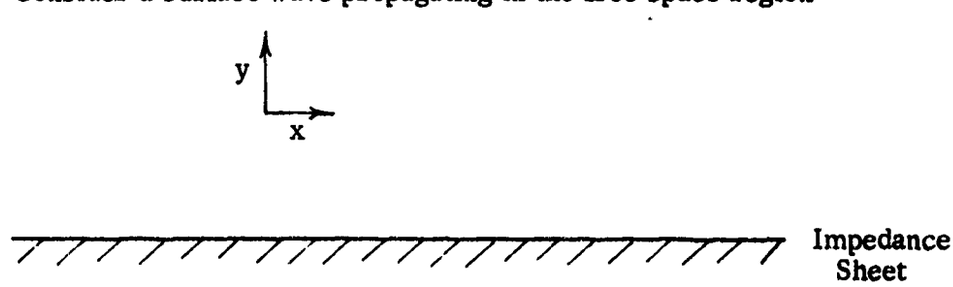

A solution of the following form will exist.

$$H_z = e^{-j\beta x} \, e^{-\sqrt{\beta^2 - k_o^2}\, y}$$

$$E_x = \frac{-\sqrt{\beta^2 - k_o^2}}{j\omega\epsilon} \, Hz$$

$$E_y = \frac{\beta}{\omega\epsilon} \, H_z$$

The wave impedance of this wave is

$$Z = \frac{E_x}{H_z} = \frac{+j\sqrt{\beta^2 - k_o^2}}{\omega\epsilon}$$

Assume an impedance sheet with surface impedance jX_s. Then we find

$$\frac{\sqrt{\beta^2 - k_o^2}}{\omega\epsilon} = X_s$$

determining the value of β. If $k_o << \beta$ (low frequency limit) then we have

$$\beta \simeq \omega\epsilon \, X_s$$

and the field quantities assume the form

$$H_z \simeq e^{-j\beta x} \, e^{-\beta y} \quad ,$$

$$E_x \cong j\frac{\beta}{\omega\epsilon} H_z \quad , \quad \text{and} \quad E_y = \frac{\beta}{\omega\epsilon} H_z \quad .$$

This is the quasi-static case ($k_o << \beta$) and an approximate expression for the electric field is derivable from a scalar potential. Indeed, the scalar potential may be taken to be

$$\varphi = \frac{H_z}{\omega\epsilon} \cong \frac{e^{-j\beta x} \, e^{-\beta y}}{\omega\epsilon}$$

with the result $\vec{E} \cong -\nabla\varphi$.

For this approximation the x component of the Poynting vector (E x H*)

reduces to $N_x = E_y H_z^* = \beta/\omega\epsilon\, e^{-2\beta y}$ while

$$\varphi \dot{D}_x^* = \frac{H_z}{\omega\epsilon}\, \epsilon\, \dot{E}_x^*$$

$$= -\frac{\beta}{\omega\epsilon}\, e^{-2\beta y} \quad ,$$

and clearly $\vec{N} \neq \varphi \dot{D}^*$.

Summing up, the electromagnetic power flow (E x H*) at any point requires a full solution of Maxwell's equations and cannot be obtained from the scalar potential method. Only the total power flow out of a closed surface can be obtained from the scalar potential method since

$$\iint_S E \times H^* \cdot d\vec{a} = \iint_S \varphi \dot{D}^* \cdot d\vec{a}$$

where S is closed. A more thorough investigation into the electromagnetic power flow will be taken up during the transducer study part of the study. For now it can be said that the electromagnetic power flow is expected to be much smaller than the mechanical power flow based on computer runs where $\varphi \dot{D}^*$ was used as an order of magnitude estimate of the Poynting vector.

2. Surface Waves on Non-Piezoelectric (Pure Elastic) Media

Surface wave propagation on a free surface of a non-piezoelectric elastic medium can be accounted for by appropriate modifications of the foregoing analysis. In this case the piezoelectric constants e_{ijk} are identically zero and the electric field and mechanical displacements are decoupled. Consequently, the fourth order matrix appearing in equation (6) reduces to the third order matrix obtained by deleting the last row and column. Subject to this modification equation (7) reduces to a sixth order equation in α which in general will have three roots with positive real parts. The boundary conditions at the free surface are given by equation (8) with the coefficients $e'_{k3j} \equiv 0$. Inasmuch as there is no coupling to an electric field the additional boundary conditions applicable thereto are unnecessary.

The relative amplitudes of the component of displacement $\beta_k^{(\ell)}$, $k = 1, 2, 3$ are evaluated for each $\alpha^{(\ell)}$ with positive real part in a manner identical to that used in the general piezoelectric case. Upon evaluation of these quantities the boundary conditions are invoked and the equations (12-14) result with the piezoelectric constants equal to zero and the sums only over the indices 1, 2, and 3. The characteristic equation for the determination of surface wave velocities again obtains from the condition that the determinant of the matrix coefficients associated with the linear system (12-14) vanishes.

The stresses, strains, power flow, etc. may be calculated as before by using the appropriate evaluations of $\beta_k^{(\ell)}$, $k = 1, 2, 3$, $B^{(k)}$, $k = 1, 2, 3$ and setting the β_4's, $A^{(4)}$, and $e_{\ell p}$ equal to zero in the equations for these quantities given previously.

3. Degenerate Cases – Piezoelectric Medium

The modes of surface wave propagation described as degenerate cases arise when the four coupled partial differential equations (4) which govern the mechanical components u_1, u_2, and u_3 and the electric field (via a scalar potential φ) reduce to two independent sets of coupled equations, assuming traveling wave motions independent of the coordinate normal to the sagital plane.

With the coordinate system chosen assuming no variation in the x_2 direction, the equations of motion (4) for the displacement components and potential may be written in the operator form (assuming $e^{j\omega t}$ time dependence)

$$L_{11}U_1 + L_{12}U_2 + L_{13}U_3 + L_{14}\varphi = 0$$

$$L_{21}U_1 + L_{22}U_2 + L_{23}U_3 + L_{24}\varphi = 0$$

$$L_{31}U_1 + L_{32}U_2 + L_{33}U_3 + L_{34}\varphi = 0$$

$$L_{41}U_1 + L_{42}U_2 + L_{43}U_3 + L_{44}\varphi = 0 \quad ,$$

where

$$L_{11} = C_{55} \frac{\partial^2}{\partial x_3^2} + 2C_{15} \frac{\partial^2}{\partial x_3 \partial x_1} + C_{11} \frac{\partial^2}{\partial x_1^2} + \omega^2 \rho$$

$$L_{12} = L_{21} = C_{45} \frac{\partial^2}{\partial x_3^2} + (C_{14} + C_{56}) \frac{\partial^2}{\partial x_3 \partial x_1} + C_{16} \frac{\partial^2}{\partial x_1^2}$$

$$L_{13} = L_{31} = C_{35} \frac{\partial^2}{\partial x_3^2} + (C_{13} + C_{55}) \frac{\partial^2}{\partial x_3 \partial x_1} + C_{15} \frac{\partial^2}{\partial x_1^2}$$

$$L_{14} = L_{41} = e_{35} \frac{\partial^2}{\partial x_3^2} + (e_{15} + e_{31}) \frac{\partial^2}{\partial x_3 \partial x_1} + e_{11} \frac{\partial^2}{\partial x_1^2}$$

$$L_{22} = C_{44} \frac{\partial^2}{\partial x_3^2} + 2C_{46} \frac{\partial^2}{\partial x_3 \partial x_1} + C_{66} \frac{\partial^2}{\partial x_1^2} + \omega^2 \rho$$

$$L_{23} = L_{32} = C_{34} \frac{\partial^2}{\partial x_3^2} + (C_{36} + C_{45}) \frac{\partial^2}{\partial x_3 \partial x_1} + C_{56} \frac{\partial^2}{\partial x_1^2}$$

$$L_{24} = L_{42} = e_{34} \frac{\partial^2}{\partial x_3^2} + (e_{14} + e_{36}) \frac{\partial^2}{\partial x_3 \partial x_1} + e_{16} \frac{\partial^2}{\partial x_1^2}$$

$$L_{33} = C_{33} \frac{\partial^2}{\partial x_3^2} + 2C_{35} \frac{\partial^2}{\partial x_3 \partial x_1} + C_{55} \frac{\partial^2}{\partial x_1^2} + \omega^2 \rho$$

$$L_{34} = L_{43} = e_{33} \frac{\partial^2}{\partial x_3^2} + (e_{13} + e_{35}) \frac{\partial^2}{\partial x_3 \partial x_1} + e_{15} \frac{\partial^2}{\partial x_1^2}$$

$$L_{44} = - \epsilon_{33} \frac{\partial^2}{\partial x_3^2} - 2\epsilon_{13} \frac{\partial^2}{\partial x_3 \partial x_1} - \epsilon_{11} \frac{\partial^2}{\partial x_1^2}$$

The elastic c_{ij}, piezoelectric ϵ_{ij}, and dielectric $\mathcal{E}_{ij}$ constants refer to the transformed (from the crystal coordinate system) quantities and are represented in terms of the abbreviated double subscript notation.

If the elastic and piezoelectric constants are such that the operator matrix $[L_{ij}]_{i,j=1,2,3,4}$ is appropriately sparse, the equations (1) decouple and the possibility of degenerate cases is encountered.

For example, in the case reported by Bleustein[4] the elastic and piezoelectric constants are such that $L_{12} = L_{14} = L_{23} = L_{34} \equiv 0$ and the equations of motion decouple into two independent systems; one system governing u_2 and φ and the other characterizing the behaviors of u_1 and u_3. This is an example of one of the two general degenerate cases which has been found to exist for a number of crystals on particular cuts and directions of propagation.

A second degenerate case which also has been reported and which appears with some regularity is manifest by the conditions $L_{12} = L_{23} = L_{24} \equiv 0$. In this case the equations of motion decouple into a coupled system of partial differential equations for the displacement components u_1, u_3 and the potential φ, and a single partial differential equation for the displacement component u_2. This particular degenerate case has been studied extensively for surface wave propagation on the basal plane of hexagonal crystals[7] and it has been shown that a surface wave solution with the displacement component u_2 alone cannot exist. It should be noted that the latter observation carries over to the general case, independent of the crystal class, surface cut, and direction of propagation.

There are other degenerate cases that can be considered. For example,

$$L_{12} = L_{13} = L_{14} \equiv 0$$

or

$$L_{31} = L_{32} = L_{34} \equiv 0 \quad .$$

These cases were considered in the analysis leading to the present study but numerical examples of these cases have not been found.

The conditions $L_{41} = L_{42} = L_{43} \equiv 0$ lead to a complete decoupling of the electric and mechanical fields and has not been found to occur for surface wave propagation on specific surfaces of any piezoelectric crystal considered thus far.

The occurrence of degenerate cases can also be described in terms of the linear equations for the relative amplitudes, β_ℓ, $\ell = 1, 2, 3, 4$, of the mechanical displacement and electric potential. The determinant of the coefficients of this system of equations is given by equation (6), wherein the elements of the determinant correspond to evaluations of the operators L_{ij} with

$$\frac{\partial}{\partial x_1} = -j\frac{\omega}{v_s} \quad \text{and} \quad \frac{\partial}{\partial x_3} = -\frac{\alpha\omega}{v_s} \quad .$$

For the sake of the following discussions let the linear system of equations for the determination of the β's be denoted

$$\sum_{\ell=1}^{4} A_{i\ell}\beta_\ell = 0 \quad , \qquad i = 1, 2, 3, 4 \quad . \tag{18}$$

The possible combinations of the elastic and piezoelectric constants which caused the equations of motion to decouple lead to the decoupling of the linear equations in the exact same fashion. Inasmuch as the linear equations (18) are employed in the numerical analyses, the various cases of decoupling are discussed again in more detail below.

The following degenerate cases have been found to exist and are accounted for in the computer program which implements the numerical analysis. They are denoted by representing the matrix $\hat{A} = \{A_{i\ell}\}_{i,\ell=1,2,3,4}$ with its appropriate zeros displayed, viz.,

$$\text{Case (1)} \quad \begin{vmatrix} A_{11} & 0 & A_{13} & A_{14} \\ 0 & A_{22} & 0 & 0 \\ A_{13} & 0 & A_{33} & A_{34} \\ A_{14} & 0 & A_{34} & A_{44} \end{vmatrix} \qquad \text{Case (2)} \quad \begin{vmatrix} A_{11} & 0 & A_{13} & 0 \\ 0 & A_{22} & 0 & A_{24} \\ A_{13} & 0 & A_{33} & 0 \\ 0 & A_{24} & 0 & A_{44} \end{vmatrix}$$

In Case (1) we note that β_2 decouples from β_1, β_3, and β_4. The determinant of $\hat{A}$ is zero if $A_{22} = 0$ (as a function of α) or if the determinant

$$A_1 = \begin{vmatrix} A_{11} & A_{13} & A_{14} \\ A_{13} & A_{33} & A_{34} \\ A_{14} & A_{34} & A_{44} \end{vmatrix} = 0 \quad .$$

The condition $A_{22} = 0$ leads to a quadratic equation in α. If $A_{22} = 0$ the system of equations yields a solution $\beta_1 = \beta_3 = \beta_4 = 0$ while β_2 can be chosen as an arbitrary constant.

If $A_1 = 0$, giving a sixth order equation in α, the system of equations requires a solution $\beta_2 = 0$ while either β_1, β_3, or β_4 may be chosen arbitrarily and the remaining two β's calculated from any two of the three equations not involving A_{22}.

In case (2) we note that β_1 and β_3 decouple from β_2 and β_4. The determinant of $\hat{A}$ goes to zero if the determinant

$$A_2 = \begin{vmatrix} A_{11} & A_{13} \\ A_{13} & A_{33} \end{vmatrix} = 0$$

or the determinant

$$A_3 = \begin{vmatrix} A_{22} & A_{24} \\ A_{24} & A_{44} \end{vmatrix} = 0 \quad .$$

Both the equations $A_2 = 0$ and $A_3 = 0$ lead to quartic equations in α. If $A_2 = 0$ the system yields the solution $\beta_2 = \beta_4 = 0$ while β_1 or β_3 may be arbitrarily chosen and the remaining β calculated from either the first or third equation of the system. If $A_3 = 0$ the system yields the solution $\beta_1 = \beta_3 = 0$ while β_2 or β_4 may be arbitrarily chosen and the remaining β calculated from either the second or fourth equation of the system.

Let the coefficients of the amplitudes $B^{(\ell)}$ (equations (12)-(16)) be considered elements of the matrix $\hat{L}$. In case (1) $\hat{L}$ takes the form

$$\begin{vmatrix} 0 & L_{12} & L_{13} & L_{14} \\ L_{21} & 0 & 0 & 0 \\ 0 & L_{32} & L_{33} & L_{34} \\ 0 & L_{42} & L_{43} & L_{44} \end{vmatrix} \quad .$$

If the determinant

$$L_1 = \begin{vmatrix} L_{12} & L_{13} & L_{14} \\ L_{32} & L_{33} & L_{34} \\ L_{42} & L_{43} & L_{44} \end{vmatrix} = 0$$

(considered as a function of the velocity v_s) then the following solution is found: $B^{(1)} = 0$ while $B^{(2)}$, $B^{(3)}$, or $B^{(4)}$ can be chosen arbitrarily and the remaining B's calculated from any two of the three equations not involving L_{21}. This situation corresponds to a wave with displacement components U_1, U_3 and potential φ and U_2 is identically zero.

If L_{21} is zero we would be led to a solution where U_1, U_3, and φ are zero while only U_2 would be present in the wave. However, it can be shown that L_{21} can not be equal to zero and therefore such a mode does not exist.*

In case (2) $\hat{L}$ takes the form

$$\begin{vmatrix} L_{11} & L_{12} & 0 & 0 \\ 0 & 0 & L_{23} & L_{24} \\ L_{31} & L_{32} & 0 & 0 \\ 0 & 0 & L_{43} & L_{44} \end{vmatrix}$$

If the determinant

$$L_2 = \begin{vmatrix} L_{11} & L_{12} \\ L_{31} & L_{32} \end{vmatrix} = 0$$

then the following solution is found: $B^{(3)} = B^{(4)} = 0$ while $B^{(1)}$ or $B^{(2)}$ can be arbitrarily chosen and the remaining B can be calculated from the first or third equation of the system (equations (12) or (14)). This situation corresponds to a wave with displacement components U_1 and U_3 while U_2 and φ are identically zero.

If the determinant

$$L_3 = \begin{vmatrix} L_{23} & L_{24} \\ L_{43} & L_{44} \end{vmatrix} = 0$$

*This case was considered in detail for surface wave propagation in the basal plane of hexagonal piezoelectric crystals by Tseng and White[7].

then the following solution is found: $B^{(1)} = B^{(2)} = 0$ while $B^{(3)}$ or $B^{(4)}$ can be arbitrarily chosen and the remaining B can be calculated from the second or fourth equation of the system (equations (13) or (15)). This situation corresponds to a wave with displacement component U_2 and potential φ while U_1 and U_3 are identically zero.

It should be noted that in paragraph 1.1 it was stated that four α's with positive real parts can be found when in the range of velocities below the slowest bulk wave velocity in the direction of propagation being considered. However, in the degenerate cases surface waves may exist when there are less than four such α's provided the appropriate α's have positive real parts. For example, in case (1) only three roots of A_1 must have positive real parts for the existence of a surface wave. The roots of $A_{22} = 0$ are not required to assume any particular form. That is, both roots corresponding to $A_{22} = 0$ may be purely imaginary but if three of the six roots corresponding to $A_1 = 0$ have positive real parts a surface wave may still exist. Similarly, for case (2) it is possible to have a solution with only two α's with positive real parts provided that both of the α's come from the same equation (i.e. both come from $A_2 = 0$ or both from $A_3 = 0$). An example of the latter situation has been reported in the literature[4] and corresponds to a wave with displacement component U_2 and potential φ. It may be noted that the (necessarily) degenerate waveforms that occur with higher velocities than the bulk waves alluded to above appear to be the non-attenuated limits of leaky or pseudo-waves and have been described for non-piezoelectric crystals by Lim and Farnell.[5]

One further case of a peculiar nature will be mentioned here although it does not fit into the category of degenerate cases. On a surface of a hexagonal crystal, solutions of the algebraic equations for the decay coefficients $\alpha^{(k)}$ exist which cause the minors of the last row and column of $\hat{A}$ to vanish. Since all the minors of the elements of $\hat{A}$ are not new the rank of the determinant is not reduced but the component β_4 is forced to be zero. Thus only β_1, β_2, and β_3 exist for such an α. The total wave however is not an example of a degenerate case since the other α's are needed for a surface wave solution. This behavior is a manifestation of the fact that one of the general bulk wave solutions is decoupled from the electric field for all directions of propagation in a piezoelectric hexagonal crystal.

4. Degenerate Cases – Non-piezoelectric (Pure Elastic) Medium

For surface wave propagation in a pure elastic medium the system of equations discussed in the proceding paragraph takes the form

$$\sum_{\ell=1}^{3} A_{i\ell}\beta_\ell = 0 \qquad i = 1, 2, 3 \tag{19}$$

where the $A_{i\ell}$ are the same as in the piezoelectric case but involve only the elastic constants (the piezoelectric constants are zero and the dielectric constants do not enter the problem). The equation for α is now sixth order. Generally three roots with positive real parts are required for a surface wave solution.

Only one degenerate case occurs for a pure elastic medium. In this case the $\hat{A}$ matrix assumes the form

$$\begin{pmatrix} A_{11} & 0 & A_{13} \\ 0 & A_{22} & 0 \\ A_{13} & 0 & A_{33} \end{pmatrix} .$$

As before the condition $A_{22} = 0$ leads to a quadratic equation in α but this case is of no interest inasmuch as it would lead to a solution with U_2 the only component of displacement and this is impossible for the same reason as in the piezoelectric case (viz. L_{21} cannot equal zero for the form of the decay coefficient α required for a surface wave solution). If

$$A_1 = \begin{vmatrix} A_{11} & A_{13} \\ A_{13} & A_{33} \end{vmatrix} = 0$$

we obtain the solution $\beta_2 = 0$, β_1, $\beta_3 \neq 0$, and either β_1 or β_3 can be chosen arbitrarily with the other β being calculated from one of the two remaining equations of the system. In this case the $\hat{L}$ matrix assumes the form

$$\begin{vmatrix} 0 & L_{12} & L_{13} \\ L_{21} & 0 & 0 \\ 0 & L_{32} & L_{33} \end{vmatrix} ,$$

and the boundary conditions can be satisfied if

$$L_1 = \begin{vmatrix} L_{12} & L_{13} \\ L_{32} & L_{33} \end{vmatrix} = 0 \quad .$$

The above form of the linear system requires that $B^{(1)} = 0$ while either $B^{(2)}$ or $B^{(3)}$ can be chosen arbitrarily and the remaining amplitude calculated from either of the equations

$$L_{12}B^{(2)} + L_{13}B^{(3)} = 0 \quad ,$$

or

$$L_{32}B^{(2)} + L_{33}B^{(3)} = 0 \quad .$$

This solution corresponds to a wave with displacement components U_1 and U_3 while U_2 is identically zero, i.e., a Rayleigh wave.

5. Surface Wave Propagation in an Isotropic Elastic, Perfectly Conducting Film on a Piezoelectric Substrate

An additional problem that has been considered is that of a finite thickness layer of isotropic elastic conductor on a piezoelectric substrate. When the displacement component waveforms

$$U_i = \beta_i \, e^{-\alpha\omega x_3/v_s} \, e^{j\omega(t - x_1/v_s)} \quad , \qquad i = 1, 2, 3 \ ,$$

are substituted into the equations of motion for an isotropic elastic medium, a linear system of equations for the relative amplitudes β_1, β_2, β_3, of the displacement components is obtained. The determinant of the system, set equal to zero, yields the equation for the determination of the exponents α, namely

$$\det\begin{pmatrix} \mu\alpha^2-(2\mu+\lambda)+\rho v_s^2 & 0 & j\alpha[\lambda+\mu] \\ 0 & \mu\alpha^2-\mu+\rho v_s^2 & 0 \\ j\alpha[\lambda+\mu] & 0 & (2\mu+\lambda)\alpha^2-\mu+\rho v_s^2 \end{pmatrix} = 0 \qquad (20)$$

where λ, μ are the Lame constants of the medium. The polynomial form of (18) is of order six and, inasmuch as the medium is of finite thickness, the solution corresponding to all six roots is needed to satisfy the boundary conditions.

The assumed forms of the solutions in the piezoelectric medium with those employed in Section II.1, namely,

where λ, μ are the Lame constants of the medium. The polynomial form of (18) is of order six and inasmuch as the medium is of finite thickness, the solutions corresponding to all six roots are needed to satisfy the boundary conditions.

The assumed forms of the solutions in the piezoelectric medium are identical with those employed in Section II.1, namely,

$$U_i^p = \sum_{\ell=1}^{4} A^{(\ell)} \beta_{pi}^{(\ell)} e^{-\alpha_p^{(\ell)} \omega x_3/v_s} e^{j\omega(t-x_1/v_s)} \qquad (21)$$

$$, \; i = 1,2,3 \; ,$$

$$\varphi^p = \sum_{\ell=1}^{4} A^{(\ell)} \beta_{pi}^{(\ell)} e^{-\alpha_p^{(\ell)} \omega x_3/v_s} e^{j\omega(t-x_1/v_s)} \; . \qquad (22)$$

In the elastic conductor the total displacements assume the form

$$U_i^c = \sum_{k=1}^{6} B^{(k)} \beta_{ci}^{(k)} e^{-\alpha_c^{(k)} \omega x_3/v_s} e^{j\omega(t-x_1/v_s)} \; , \quad i = 1,2,3 \; , \qquad (23)$$

and the potential function is identically zero. Thus there are 10 unknown amplitude coefficients $A^{(\ell)}$, $B^{(k)}$, $\ell = 1,2,3,4$, $k = 1,\ldots,6$ to be determined.

The boundary conditions applicable in this problem are as follows:

Continuity of displacement at $x_3 = 0$	$U_i^p(x_1, 0) = U_i^c(x_1, 0)$	$i = 1, 2, 3$
Continuity of stress components at $x_3 = 0$	$T_{3j}^p(x_1, 0) = T_{3j}^c(x_1, 0)$	$j = 1, 2, 3$
Vanishing of stress components at the free surface at $x_3 = -h$	$T_{3j}^c(x_1, -h) = 0$	$j = 1, 2, 3$
Vanishing of potential at $x_3 = 0$	$\varphi^p(x_1, 0) = 0$	

Applying these ten conditions to the above solutions yields a system of ten homogeneous algebraic equations in the ten unknown amplitude coefficients $A^{(i)}$, $B^{(j)}$. From this point the solution for surface wave velocities and field distributions proceeds as before except that there are now ten equations instead of (4). The explicit form of the determinant of the system stemming from the boundary conditions is given in Appendix I.

6. Surface Wave Propagation at the Interface between a Piezoelectric Substrate and a Semi-Infinite Fluid Medium

The physical problem considered in this section is that of a surface wave propagating along the interface between a piezoelectric crystal and a semi-infinite fluid. Again a rectangular coordinate system is chosen with the x_3 axis normal to the crystal surface and the x_1 axis in the direction of propagation as in the preceding problems. The fields in the crystal and fluid media are assumed to be independent of the x_2 direction. Arbitrary orientations of the crystal surface with respect to the crystal axes are handled by means of an Euler Transformation as before and the differential equations in the crystal medium are the same.

The elastic properties of the fluid medium are described in terms of a single elastic constant λ (modulus of compression); the effect of viscosity is ignored. Consequently, the differential equations in the fluid are

$$U_{1,11} + U_{3,13} = \rho_f \ddot{U}_1/\lambda$$

$$U_{1,13} + U_{3,33} = \rho_f \ddot{U}_3/\lambda \qquad , x_3 < 0 \ , \tag{24}$$

$$\nabla^2 \varphi = 0 \qquad ,$$

wherein the derivatives with respect to x_2 are taken to be zero in keeping with the uniformity of the field in this direction and ρ_f is the density of the fluid medium.

In the crystal medium ($x_3 > 0$) traveling wave solutions of the form

$$U_i = \beta_i \, e^{-\alpha_c \omega x_3/v_s} \, e^{j\omega(t-x_1/v_s)} \quad , \qquad i = 1,2,3 \quad ,$$
$$\varphi = \beta_4 \, e^{-\alpha_c \omega x_3/v_s} \, e^{j\omega(t-x_1/v_s)} \tag{25}$$

are sought and all analytical considerations pertaining to the crystal medium are identical with those discussed in Sections II.1 and II.2.

In the fluid ($x_3 < 0$) the particle displacements and electric potential are decoupled and are assumed to have the forms

$$U_1 = \gamma_1 \, e^{-\alpha_f \omega x_3/v_s} \, e^{j\omega(t-x_1/v_s)} \quad ,$$
$$U_3 = \gamma_3 \, e^{-\alpha_f \omega x_3/v_s} \, e^{j\omega(t-x_1/v_s)} \quad , \tag{26}$$
$$\varphi = C e^{\omega x_3/v_s} \, e^{j\omega(t-x_1/v_s)} \quad .$$

Substitution of these displacement and potential waveforms into the differential equations (24) leads to the following equation for α_f in terms of the velocity v_s, namely

$$\det \begin{pmatrix} \rho_f v_s^2 - \lambda & j\alpha_f \lambda \\ j\alpha_f \lambda & \lambda\alpha_f^2 + \rho_f v_s^2 \end{pmatrix} = 0 \quad , \tag{27}$$

from which it follows that

$$\alpha_f = \pm \sqrt{\frac{\lambda - \rho_f v_s^2}{\lambda}} \quad . \tag{28}$$

The relative amplitudes γ_1 and γ_3 are obtained from the homogeneous linear system of equations whose coefficient matrix appears in equation (7), viz.,

$$\gamma_1 = \frac{j\alpha_f \lambda}{\lambda - \rho_f v_s^2} \gamma_3 \quad . \tag{29}$$

The sign of α_f in equation (28) is determined by the condition that the surface wave is bounded as $x_1 \to +\infty$.

The total field in the crystal is expressed as a linear combination of the "partial" fields associated with the allowed values of α_c, namely

$$\begin{aligned} U_i &= \sum_{\ell=1}^{4} B^{(\ell)} \beta_i^{(\ell)} e^{-\alpha_c^{(\ell)} \omega x_3/v_s} e^{j\omega(t-x_1/v_s)} \\ \varphi &= \sum_{\ell=1}^{4} B^{(\ell)} \beta_4^{(\ell)} e^{-\alpha_c^{(\ell)} \omega x_3/v_s} e^{j\omega(t-x_1/v_s)} \quad . \end{aligned} \tag{30}$$

In the fluid medium the total displacements and potential are given by equation (26).

The amplitude coefficients $B^{(1)}$, $B^{(2)}$, $B^{(3)}$, $B^{(4)}$, C and γ_3 are determined by the boundary conditions:

U_3 continuous at $x_3 = 0$

φ continuous at $x_3 = 0$

D_3 continuous at $x_3 = 0$ (electric displacement)

T_{33} continuous at $x_3 = 0$

$T_{31} = 0$ at $x_3 = 0$

$T_{32} = 0$ at $x_3 = 0$

The components of the electric displacement vector $\vec{D}$ in the crystal are given by

$$D_i = e_{ik\ell} U_{k,\ell} - \varepsilon_{ik} \varphi_{,k} \quad , \qquad i = 1, 2, 3 \quad ;$$

in the fluid medium, $\vec{D} = -\varepsilon_f \nabla\varphi$, where ε_f is the dielectric constant of the fluid.

Application of the boundary conditions to the total field solutions leads to a set of six homogeneous equations in the unknown amplitudes $B^{(\ell)}$ $\ell = 1, 2, 3, 4$, C and γ_3. The coefficient matrix of this system of equations, $M = [M_{ik}]_{j,k=1,\ldots,6}$, assumes the form*

---

*The explicit equations for the elements of M are given in Appendix II.

$$M = \left(\begin{array}{ccccc|c} M_{11} & M_{12} & M_{13} & M_{14} & 0 & M_{16} \\ \hline M_{21} & M_{22} & M_{23} & M_{24} & M_{25} & 0 \\ M_{31} & M_{32} & M_{33} & M_{34} & M_{35} & 0 \\ M_{41} & M_{42} & M_{43} & M_{44} & 0 & M_{46} \\ M_{51} & M_{52} & M_{53} & M_{54} & 0 & 0 \\ M_{61} & M_{62} & M_{63} & M_{64} & 0 & 0 \end{array}\right) . \tag{31}$$

The characteristic equation for the surface wave velocity v_s is obtained from the condition for the existence of a non-trivial solution of the aforementioned homogeneous system, namely, $\det M = 0$.

The complex solutions to the equation $\det M = 0$ can be obtained in a straightforward fashion using the iterative scheme described in the programming sections and such a procedure has been built into the computer program for the fluid problems. However such a procedure is time consuming and does not fully exploit prior work on piezoelectric surface wave propagation problems. Inasmuch as a computer program exists to calculate piezoelectric surface wave characteristics under a variety of conditions, in particular, when the surface of the crystal is traction free and the adjacent half space is a massless, non elastic dielectric, it is desirable to make maximum use of this program. This can be done for a wide range of parameter values for the fluid medium by making use of a perturbation scheme for obtaining the roots of $\det M = 0$ which utilizes the results of this program and requires, in addition, only the evaluation of a few determinants at specified velocities.

The implementation of the perturbation procedure is based on the fact that a particular sub-matrix N of the matrix M (as indicated by the partitioned matrix in equation (31)) is the coefficient matrix of the linear system corresponding to the boundary conditions at the surface of a crystal in contact with a medium whose elastic properties are those of a vacuum but whose dielectric constant is that of the fluid medium. Consequently, the equation $\det N = 0$ is the characteristic equation for the velocity of the surface waves

which can propagate in this configuration, and the roots of this equation can be found using the computer program for the first problem with $\omega h = \infty$ and the dielectric constant of a vacuum ϵ_o replaced by the dielectric constant of the fluid (ϵ_f).

The perturbation procedure is based on the assumption that the complex velocity which satisfies $\det M = 0$ corresponds to a small perturbation on the real velocity solution of $\det N = 0$, i.e. that the mechanical loading of the substrate by the fluid medium is quite small.

Formally the perturbation scheme is derived as follows. Let v_{s_o} be the velocity such that $\det N(v_{s_o}) = 0$ and assume that there exists a complex perturbation Δv_s such that the $\det M(v_s) = \det M(v_{s_o} + \Delta v_s) = 0$ and $|\Delta v_s / v_{s_o}| \ll 1$. For $|\Delta v_s / v_{s_o}| \ll 1$

$$\det M(v_s) = \det M(v_{s_o}) + \frac{d}{dv_s}\left[\det M(v_s)\right]\Big|_{v_s = v_{s_o}} \cdot \Delta v_s + O[(\Delta v_s)^2] = 0 \ , \tag{32}$$

whereupon neglecting terms $O[(\Delta v_s)^2]$ yields

$$\Delta v_s = - \frac{\det M(v_{s_o})}{\frac{d}{dv_s}(\det M(v_{s_o}))} \ . \tag{33}$$

Expanding $\det M(v_{s_o})$ about the last column (which has only two elements) gives

$$\Delta v_s = \frac{M_{46} K}{M_{16}(\det N)' - M_{46} K' - M'_{46} K} \tag{34}$$

where the quantity K in (34) is the minor of the element M_{46} in the matrix M, the primes denote differentiation with respect to v_s, and all quantities are evaluated at v_{s_o}. In obtaining (34) explicit use has been made of the fact that $\det N(v_{s_o}) = 0$.

The derivatives of the determinants employed in the perturbation procedure are calculated numerically. The derivative of the matrix element M_{46} was obtained analytically.

In both methods of obtaining the complex velocity v_s the functions involved (matrix elements and minors of the matrix M) contain α_f as an independent variable which in turn is a dependent variable with argument v_s. Equation (28) shows that there is an ambiguity in the sign of α_f. The resolution of this ambiguity leads to the particular character of the piezoelectric surface wave.

The variation of the surface wave in the direction of propagation is assumed to be bounded in the positive ($x_1 \to +\infty$) direction of propagation. This assumption imposes the requirement that $\mathrm{Im}\,[v_s] \geq 0$. Consequently, the sign of α_f must be chosen such that this condition is satisfied.

Since λ and ρ_f are positive real it can be shown that

$$\mathrm{Re}\left[-\frac{\alpha_f^{(\pm)}}{v_s}\right] \gtrless 0 \quad ,$$

where $\alpha_f^{(\pm)}$ denotes to the values of α_f from equation (28) corresponding to the positive and negative signs of the radical. Consequently, if $\alpha_f^{(-)}$ is required to obtain a root v_s such that $\mathrm{Im}\,[v_s] \geq 0$ the corresponding surface wave is of the leaky type. On the other hand, if $\alpha_f^{(+)}$ is required to obtain a solution of the determental equation the surface wave is evanescent in character. In all numerical cases considered the surface wave was a leaky wave.

In the program described in the following section, two values of input velocity are required depending on the program option used. If the perturbation scheme is used, a very accurate value (at least 6 place accuracy) of velocity must be input. This value is to be computed from the existing surface wave program wherein the dielectric constant of the fluid medium is substituted for that of free space (outside the crystal medium). On the other hand, if the root finding scheme is employed only a reasonable estimate of the complex velocity is required.

A final word of caution is in order regarding the use of the computer program. In checking out the various options available with the program, it was found that if the leaky wave velocity is a small perturbation on the surface wave velocity in the absence of the fluid medium, then the use of the perturbation scheme led to more reliable results than the root finding option. On the other hand, if the fluid medium significantly loaded the substrate material, the root

finding scheme gave good results whereas the perturbation scheme (as would be expected) gave erratic results in some cases. The former differences stem from the fact that the change in the velocity due to the air loading is on the order of the errors incurred in the root finding scheme while the latter are due to the approximations inherent to the perturbation procedure.

7. Surface Wave Propagation in an Isotropic Elastic Film on a Piezoelectric Substrate

This section gives a brief description of the theoretical analysis of surface wave propagation on a semi-infinite piezoelectric substrate with a contiguous isotropic dielectric-elastic layer, as shown in Figure 3.

The substrate is assumed to be a completely general piezoelectric (or non-piezoelectric) crystal medium with arbitrary surface normal direction relative to the crystal axes of the medium. The material layer adjacent to the substrate is assumed to be a general isotropic elastic medium with isotropic dielectric properties. Only pure modes of propagation are considered, that is, leaky surface waves or evanescent (or cut off) modes of propagation have not been accounted for in the computer program.

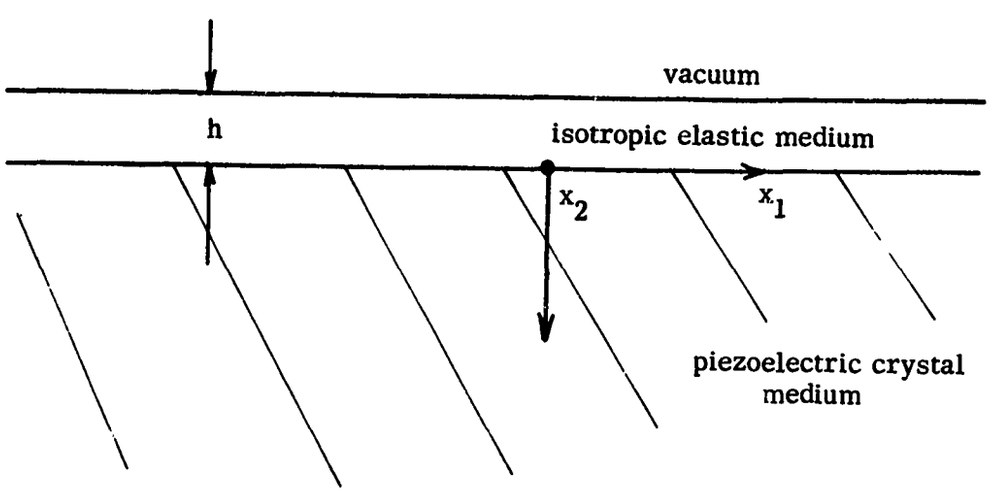

Figure 3. Semi-infinite Piezoelectric Substrate with a Contiguous Isotropic Elastic Layer.

The coordinate system employed in the analysis is illustrated in Figure 3. The piezoelectric crystal medium occupies the region $x_3 > 0$ and the direction of propagation is assumed to be in the x_1 direction. The fields in both the crystal and layer are assumed to be independent of the x_2 coordinate. Arbitrary orientations of the crystal surface with respect to the crystal axes are considered as before by an Euler Transformation. Inasmuch as the dielectric layer is isotropic, both from an elastic and an electromagnetic point of view, the quantities characterizing the medium are invarient under coordinate transformations.

The analysis pertaining to the crystal or "substrate" medium is identical to that described in Sections II.1 and II.2.

The elastic properties of the dielectric layer are described in terms of two elastic constants, λ_d, the modulus of compression or Lame's constant, and μ_d the shear modulus. Inasmuch as the layer is non-piezoelectric the differential equations for the mechanical displacements and electric potential decouple and assume the form

$$\mu_d \nabla^2 \vec{U} + (\lambda_d + \mu_d) \nabla (\nabla \cdot \vec{U}) = \rho_d \ddot{\vec{U}} \quad , \qquad -h < x_3 < 0 \quad , \tag{35}$$

and

$$\nabla^2 \varphi = 0 \quad , \tag{36}$$

where $\vec{U} = (U_1, U_2, U_3)$ and ρ_d is the density of the dielectric medium.

In the dielectric medium the assumed displacement waveforms may be expressed as

$$U_i = \beta_{d_i} e^{-\alpha_d \omega x_3 / v_s} e^{j\omega(t - x_1/v_s)} \quad , \qquad i = 1, 2, 3 \quad . \tag{37}$$

Substitution of these waveforms into the differential equations (35) yields a linear system of homogeneous equations in the unknowns β_{d1}, β_{d2} and β_{d3}. The existence of non-trivial solutions requires that the determinant of the coefficients of the system vanish thus leading to the following classical equations for normalized transverse wave numbers α_d in terms of the velocity v_s, namely,

$$\alpha_d^{(1,2)} = \alpha_d^{\pm}\,(\text{shear}) = \pm\sqrt{\frac{\mu_d - \rho_d v_s^2}{\mu_d}} \tag{38}$$

$$\alpha_d^{(3,4)} = \alpha_d^{\pm}\,(\text{compressional}) = \pm\sqrt{\frac{\lambda_d + 2\mu_d - \rho_d v_s^2}{\lambda_d + 2\mu_d}} \tag{39}$$

and

$$\alpha_d^{(5,6)} = \alpha_d^{(1,2)} \quad ,$$

since the shear mode is degenerate for an isotropic elastic medium.*

Finally, in the dielectric medium, the two independent solutions of (36), assuming $e^{-j\omega x_1/v_s}$ variation in the x_1 direction, are

$$\varphi_{1,2} = C_{1,2}\; e^{\pm\omega x_3/v_s}\; e^{j\omega(t-x_1/v_s)} \quad . \tag{40}$$

In the "free space" region $-\infty < x_3 < -h$ there are no mechanical displacements but a potential function exists and must satisfy the differential equation (36). In addition, the requirement that the potential be bounded as $x \to -\infty$ is imposed. Therefore, the form of the potential is taken to be

$$\varphi_s = C_3\; e^{\omega x_3/v_3}\; e^{j\omega(t-x_1/v_s)} \quad . \tag{41}$$

The total displacement and potential waveforms in the piezoelectric crystal are expressed as linear combinations of the "partial" fields associated with the allowed values of α_c. Denoting these values $\alpha_c^{(\ell)}$, $\ell = 1, 2, 3, 4$, the displacement components and potential may be expressed as

*The term degenerate is used here in the sense that in the characteristic equation for the normalized transverse wave numbers α (for example, corresponding to the determental equation (3) for the general piezoelectric crystal) the roots $\alpha^{(1)}$ and $\alpha^{(2)}$ are double roots and hence two linearly independent eigenvectors can be defined for each distinct value.

$$U_i^{(c)} = \sum_{\ell=1}^{4} B^{(\ell)} \beta_{Ci}^{(\ell)} e^{-\alpha_c^{(\ell)} \omega x_3/v_s} e^{j\omega(t-x_1/v_s)} , \quad i = 1,2,3 ,$$

$$\varphi = \sum_{\ell=1}^{4} B^{(\ell)} \beta_{Ci}^{(\ell)} e^{-\alpha_c^{(\ell)} \omega x_3/v_s} e^{j\omega(t-x_1/v_s)} . \tag{42}$$

In the dielectric medium the total displacement components assume the form

$$U_i^{(d)} = \sum_{\ell=1}^{6} D^{(\ell)} \beta_{d_i}^{(\ell)} e^{-\alpha_d^{(\ell)} \omega x_3/v_s} e^{j\omega(t-x_1/v_s)} , \quad i = 1,2,3 , \tag{43}$$

while the total potential is given by

$$\varphi^d = \left(C_1 e^{\omega x_3/v_s} + C_2 e^{-\omega x_3/v_s} \right) e^{j\omega(t-x_1/v_s)} \tag{44}$$

In the free space region the total potential is given by equation (41).

The as yet unspecified amplitude coefficients $B^{(\ell)}$, $\ell = 1,2,3,4$, ;$D^{(\ell)}$, $\ell = 1,2,\ldots,6$; C_1; C_2; and C_3 are determined, to within a constant, together with the surface wave velocity v_s, by the following continuity and boundary conditions:

(i) U_1, U_2, and U_3 continuous at $x_3 = 0$

(ii) φ continuous at $x_3 = 0$ and $x_3 = -h$

(iii) Continuity of the normal component of electric displacement at $x_3 = 0$ and $x_3 = -h$

(iv) Continuity of shear and normal stresses (T_{31}, T_{32}, T_{33}) at $x_3 = 0$

(v) The surface $x_3 = -h$ is stress free ($T_{31} = T_{32} = T_{33} = 0$).

The components of the electric displacement vector $\vec{D}$ are given by

$$D_i = e_{ik\ell} U_{k,\ell} - \epsilon_{ik} \varphi_{,k} , \qquad i = 1,2,3 \qquad x_3 > 0 ,$$

$$\vec{D} = \epsilon_d \nabla\varphi \qquad -h < x_3 < 0 ,$$

and

$$\vec{D} = \epsilon_o \nabla\varphi \qquad x_3 < -h \quad .$$

The components of stress T_{31}, T_{32}, and T_{33} are given by

$$T_{3j} = C_{3jk\ell} U_{k,\ell} + e_{k3j}\varphi_{,k} \quad , \qquad j = 1,2,3, \quad x_3 > 0 \quad .$$

$$\left.\begin{aligned} T_{31} &= \mu_d(U_{1,3} + U_{3,1}) \\ T_{32} &= \mu_d U_{2,3} \\ T_{33} &= (\lambda_d + 2\mu_d)\, U_{3,3} + \lambda_d U_{1,1} \end{aligned}\right\} \; -h < x_3 < 0 \quad .$$

Application of the continuity and boundary conditions (i)....(v) to the total displacements and potentials (40), (41), (42), (43), and (44) leads to a system of thirteen linear homogeneous equations in the thirteen unknown amplitudes $B^{(\ell)}$, $\ell = 1,2,3,4$, $D^{(\ell)}$, $\ell = 1,\ldots 6$, C_1, C_2 and C_3. The equation for the surface wave velocity v_s is obtained from the condition for the existence of a non-trivial solution of this system of equations, namely, that the determinant of the system vanish. The explicit forms of the coefficients L_{ij}, $i,j = 1,\ldots,13$, of this system are contained in Appendix III where the appropriate boundary conditions represented by each row of the matrix are indicated.

If the substrate is non-piezoelectric, modifications of the foregoing analyses identical tot hose described in Section II.1 are required. In this case, the characteristic equation for the surface wave velocity is the determinant of a (9 x 9) matrix comprised of the coefficients of the amplitudes $D^{(\ell)}$, $\ell = 1,\ldots,6$, and $B^{(\ell)}$, $\ell = 1,2,3$ in the homogeneous system of 9 equations in 9 unknowns derived from the boundary conditions given above upon neglecting the electric field and setting the piezoelectric constants equal to zero.

Degenerate Cases (Piezoelectric Substrate)

The same degenerate cases arise as those considered in the preceeding sections and the selection of β's proceeds as before.

For case (1) (Section II.2) solutions are sought wherein U_1, U_3 and φ only exist in the crystal. This type of solution uses only the α values which

lead to $\beta_2 = 0$ and β_1, β_3, and β_4 non-zero. Also in this problem solutions where U_2 only exists in the crystal must be considered (e.g. Love waves or the piezoelectric perturbations thereof). This solution stems from the root α which leads to non-zero β_2 and zero β_1, β_3, and β_4.

As in the previously considered degenerate cases the determinant of the boundary condition matrix $\hat{L}$ factors into the product of two determinants. The determinant which corresponds to the U_1, U_3, φ solutions is denoted M and assumes the form,

$$M = \begin{vmatrix} L_{11} & L_{12} & L_{13} & L_{14} & L_{18} & L_{19} & L_{1,10} & L_{1,11} & L_{1,12} & L_{1,13} \\ L_{31} & — & — & — & — & — & — & — & — & — & — \\ L_{41} & — & — & — & — & — & — & — & — & — & — \\ L_{61} & — & — & — & — & — & — & — & — & — & — \\ L_{71} & — & — & — & — & — & — & — & — & — & — \\ L_{91} & — & — & — & — & — & — & — & — & — & — \\ L_{10,1} & — & — & — & — & — & — & — & — & — & — \\ L_{11,1} & — & — & — & — & — & — & — & — & — & — \\ L_{12,1} & — & — & — & — & — & — & — & — & — & — \\ L_{13,1} & — & — & — & — & — & — & — & — & — & L_{13,13} \end{vmatrix}$$

The solution for the U_2 case depends upon existence of zeros of a determinant N where N is a (3 x 3) determinant.

$$N = \begin{vmatrix} L_{25} & L_{26} & L_{27} \\ L_{55} & L_{56} & L_{57} \\ L_{85} & L_{86} & L_{87} \end{vmatrix} .$$

For case (2) (Section II.2) solutions wherein only U_1 and U_3 exist are considered. This type of solution uses only those α's which lead to zero β_2 and β_4 and non-zero β_1 and β_3. Solutions where only U_2 and φ exist also must be considered. This solution employs the α's which give non-zero β_2 and β_4 but zero β_1 and β_3.

The solution for the U_1, U_3 case depends upon existence of zeros of a determinant P (6 x 6), where,

$$P = \begin{vmatrix} L_{11} & L_{12} & L_{13} & L_{14} & L_{17} & L_{18} \\ L_{31} & — & — & — & — & — & — \\ L_{41} & — & — & — & — & — & — \\ L_{61} & — & — & — & — & — & — \\ L_{71} & — & — & — & — & — & — \\ L_{81} & — & — & — & — & — & — \end{vmatrix}$$

The solution for the U_2, U_4 case depends upon existence of zeros of a determinant Q (7 x 7), which assumes the form

$$Q = \begin{vmatrix} L_{25} & L_{26} & L_{29} & L_{2,10} & L_{2,11} & L_{2,12} & L_{2,13} \\ L_{55} & — & — & — & — & — & — & — & — & — \\ L_{85} & — & — & — & — & — & — & — & — & — \\ L_{10,5} & — & — & — & — & — & — & — & — & — \\ L_{11,5} & — & — & — & — & — & — & — & — & — \\ L_{12,5} & — & — & — & — & — & — & — & — & — \\ L_{13,5} & — & — & — & — & — & — & — & — & — \end{vmatrix} .$$

Degenerate Cases (Non-Piezoelectric Substrate)

The degenerate cases U_1, U_3, only or U_2 only involve one α with zero β_1, β_3, and non-zero β_2 and two α's with zero β_2 and non-zero β_1, β_3. The U_1, U_3 case requires the investigation of the roots of a determinant of the same form as P except for relabeling the columns due to a relabeling of the α's. This determinant is designated R and has the form,

$$R = \begin{vmatrix} L_{11} & L_{12} & L_{13} & L_{14} & L_{18} & L_{19} \\ L_{31} & — & — & — & — & — & — \\ L_{41} & — & — & — & — & — & — \\ L_{61} & — & — & — & — & — & — \\ L_{71} & — & — & — & — & — & — \\ L_{91} & — & — & — & — & — & — \end{vmatrix}$$

Solutions with U_2 only (Love waves) lead to the consideration of the roots of a determinant which is identical to N.

III. ANALYSIS OF AN ELECTRIC CURRENT LINE SOURCE ABOVE A PIEZOELECTRIC HALF-SPACE

In this section a study is made of the excitation of piezoelectric waves by means of an interdigital electrode transducer. Arbitrary crystals and crystal orientations are considered as in the preceeding chapter. The problem is treated from a field theory point of view and is case in the formalism of a Green's function solution. Due to the complexity of the problem it is expediant to make some simplifying assumptions before the analysis is attempted. Consequently, it is assumed that the coupling between the individual strips can be neglected and that the current on the strips can be approximated by an assumed current distribution. Furthermore it is assumed that only current flow normal to the array is of importance in exciting the piezoelectric waves and that the strips of the array can be considered to be of infinite extent thus reducing the problem to a two dimensional one.

With these assumptions in mind the Green's function sought is one for an infinitesimal two dimensional electric dipole above a piezoelectric substrate as illustrated in Figure 4.

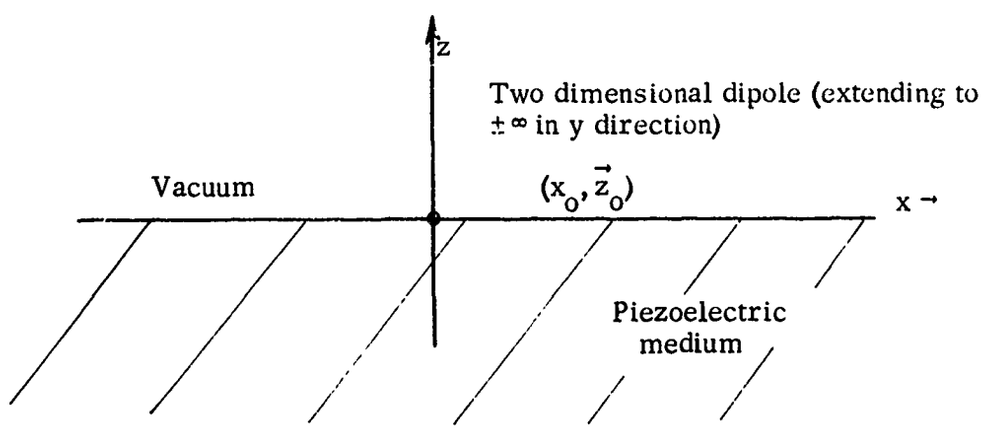

Figure 4

The dipole is located at x_o, z_o and extends to $\pm\infty$ in the y direction. It is oriented in the x direction. The crystal fills the region $z \leq 0$ while a vacuum exists in the region $z > 0$. Assuming an $e^{j\omega t}$ time dependence, the equation for the electric field in the vacuum is as follows:

$$\nabla \times \nabla \times \vec{E} = j\omega\mu_o \vec{J} + \omega^2 \mu_o \vec{D} \quad . \tag{45}$$

For the two dimensional dipole $\vec{J} = \vec{U}_x\,\delta(z-z_o)\,\delta(x-x_o)$ and equation (45) reduces to

$$\nabla^2\vec{E} + k_o^2\vec{E} = -j\omega\mu_o\left[1 + \frac{\nabla\nabla}{k_o^2}\right]\cdot\vec{J}$$

where 1 is the unit dyadic, $k_o = 2\pi/\lambda_o$, and λ_o is the free space wavelength. Setting $\vec{E} = (1 + \nabla\nabla/k_o^2)\cdot\vec{G}$ it is easily seen that

$$\nabla^2\vec{G} + k_o^2\vec{G} = -j\omega\mu_o\,\delta(z-z_o)\,\delta(x-x_o)\,\vec{U}_x \quad . \tag{46}$$

A particular solution to equation (46) is

$$\vec{G} = -\vec{U}_x\,\frac{\omega\mu_o}{4\pi}\int_{-\infty}^{\infty}\frac{e^{j\sqrt{k_o^2-k_x^2}\,|z-z_o|}}{\sqrt{k_o^2-k_x^2}}\,e^{jk_x(x-x_o)}\,dk_x \quad . \tag{47}$$

A particular solution for $\vec{E}$ (viz. $\vec{E}_p$) is derivable from $\vec{G}$ and in the region $0 < z < z_o$ the following expression results, namely,

$$\frac{E_p}{k_o} = \frac{1}{4\pi}\sqrt{\frac{\mu_o}{\epsilon_o}}\left\{-\vec{U}_x\int_{-\infty}^{\infty}\sqrt{1-K_x^2}\;e^{-j\sqrt{1-K_x^2}\,(\bar{z}-\bar{z}_o)}\;e^{jK_x(\bar{x}-\bar{x}_o)}\,dK_x\right.$$

$$\left.-\vec{U}_z\int_{-\infty}^{\infty}K_x\,e^{-j\sqrt{1-K_x^2}\,(\bar{z}-\bar{z}_o)}\;e^{jK_x(\bar{x}-\bar{x}_o)}\,dK_x\right\} \tag{48}$$

$$= \frac{E_{px}}{k_o}\,\vec{U}_x + \frac{E_{pz}}{k_o}\,\vec{U}_z$$

where $K_x = k_x/k_o$, $\bar{x} = k_o x$, and $\bar{z} = k_o z$. A solution for the total electric field may be obtained as a superposition of $\vec{E}_p$ and a general solution of the homogeneous equation $\nabla^2\vec{E} + k_o^2\vec{E} = 0$. That is, in the region $0 < z < z_o$ E may be written in the form

$$\frac{E_x}{k_o} = \frac{E_{px}}{k_o} + \int_{-\infty}^{\infty} B_o(K_x)\, e^{j\sqrt{1-K_x^2}(\bar{z}-\bar{z}_o)}\, e^{jK_x(\bar{x}-\bar{x}_o)}\, dK_x$$

$$\frac{E_y}{k_o} = \int_{-\infty}^{\infty} A_o(K_x)\, e^{j\sqrt{1-K_x^2}(\bar{z}-\bar{z}_o)}\, e^{jK_x(\bar{x}-\bar{x}_o)}\, dK_x \tag{49}$$

$$\frac{E_z}{k_o} = \frac{E_{pz}}{k_o} - \int_{-\infty}^{\infty} B_o(K_x)\, \frac{K_x}{\sqrt{1-K_x^2}}\, e^{j\sqrt{1-K_x^2}(\bar{z}-\bar{z}_o)}\, e^{jK_x(\bar{x}-\bar{x}_o)}\, dK_x$$

where $A_o(K_x)$ and $B_o(K_x)$ are functions of K_x which are determined through the application of the boundary conditions on the total fields at $z = 0$.

In the crystal medium ($z < 0$) the mechanical displacement fields and the electric fields may be expressed as follows:

$$U_i = \int_{-\infty}^{\infty} U_i(K_x)\, e^{-jK_z(\bar{z}-\bar{z}_o)}\, e^{jK_x(\bar{x}-\bar{x}_o)}\, dK_x \qquad i = 1, 2, 3$$

$$\frac{E_i}{k_o} = \int_{-\infty}^{\infty} \psi_i(K_x)\, e^{-jK_z(\bar{z}-\bar{z}_o)}\, e^{jK_x(\bar{x}-\bar{x}_o)}\, dK_x \qquad i = 1, 2, 3 \tag{50}$$

When the above integral representations are substituted into the differential equations for the crystal, viz.

$$C_{ijk\ell}\, U_{k,\ell i} - e_{kij} E_{k,i} = \rho \ddot{U}_j \qquad j = 1, 2, 3$$

$$\nabla \times \nabla \times \vec{E} = \omega^2 \mu_o \vec{D} \tag{51}$$

there results a linear system of homogeneous equations for the amplitudes $U_i(K_x)$ and $\psi_i(K_x)$. The determinant of the coefficients of U_i and ψ_i must vanish for a non-trivial solution to exist, namely,

$$
\det \begin{pmatrix}
\begin{array}{l} -C_{11}K_x^2+2C_{15}K_xK_z \\ -C_{55}K_z^2+C^2\rho \end{array} & \begin{array}{l} -C_{16}K_x^2-C_{45}K_z^2 \\ +(C_{14}+C_{56})K_xK_z \end{array} & \begin{array}{l} -C_{15}K_x^2-C_{35}K_z^2 \\ +(C_{13}+C_{55})K_xK_z \end{array} & \begin{array}{l} -e_{11}jK_x \\ +e_{15}jK_z \end{array} & \begin{array}{l} -e_{21}jK_x \\ +e_{25}jK_z \end{array} & \begin{array}{l} -e_{31}jK_x \\ +e_{35}jK_z \end{array} \\
\begin{array}{l} -C_{16}K_x^2-C_{45}K_z^2 \\ +(C_{14}+C_{56})K_xK_z \end{array} & \begin{array}{l} -C_{66}K_x^2+2C_{46}K_xK_z \\ -C_{44}K_z^2+C^2\rho \end{array} & \begin{array}{l} -C_{56}K_x^2-C_{34}K_z^2 \\ +(C_{36}+C_{45})K_xK_z \end{array} & \begin{array}{l} -e_{16}jK_x \\ +e_{14}jK_z \end{array} & \begin{array}{l} -e_{26}jK_x \\ +e_{24}jK_z \end{array} & \begin{array}{l} -e_{36}jK_x \\ +e_{34}jK_z \end{array} \\
\begin{array}{l} -C_{15}K_x^2-C_{35}K_z^2 \\ +(C_{13}+C_{55})K_xK_z \end{array} & \begin{array}{l} -C_{56}K_x^2-C_{34}K_z^2 \\ +(C_{36}+C_{45})K_xK_z \end{array} & \begin{array}{l} -C_{55}K_x^2+2C_{35}K_xK_z \\ -C_{33}K_z^2+C^2\rho \end{array} & \begin{array}{l} -e_{15}jK_x \\ +e_{13}jK_z \end{array} & \begin{array}{l} -e_{25}jK_x \\ +e_{23}jK_z \end{array} & \begin{array}{l} -e_{35}jK_x \\ +e_{33}jK_z \end{array} \\
C^2\mu_o[e_{11}jK_x-e_{15}jK_z] & \begin{array}{l} C^2\mu_o[e_{16}jK_x \\ -e_{14}jK_z] \end{array} & \begin{array}{l} C^2\mu_o[e_{15}jK_x \\ -e_{13}jK_z] \end{array} & \begin{array}{l} C^2\mu_o\varepsilon_{11} \\ -K_z^2 \end{array} & C^2\mu_o\varepsilon_{12} & \begin{array}{l} C^2\mu_o\varepsilon_{13} \\ -K_xK_z \end{array} \\
C^2\mu_o[e_{21}jK_x-e_{25}jK_z] & \begin{array}{l} C^2\mu_o[e_{26}jK_x \\ -e_{24}jK_z] \end{array} & \begin{array}{l} C^2\mu_o[e_{25}jK_x \\ -e_{23}jK_z] \end{array} & C^2\mu_o\varepsilon_{21} & \begin{array}{l} C^2\mu_o\varepsilon_{22} \\ -K_x^2-K_z^2 \end{array} & C^2\mu_o\varepsilon_{23} \\
C^2\mu_o[e_{31}jK_x-e_{35}jK_z] & \begin{array}{l} C^2\mu_o[e_{36}jK_x \\ -e_{34}jK_z] \end{array} & \begin{array}{l} C^2\mu_o[e_{35}jK_x \\ -e_{33}jK_z] \end{array} & \begin{array}{l} C^2\mu_o\varepsilon_{31} \\ -K_xK_z \end{array} & C^2\mu_o\varepsilon_{32} & \begin{array}{l} C^2\mu_o\varepsilon_{33} \\ -K_x^2 \end{array}
\end{pmatrix} = 0 \qquad (52)
$$

In the above equation C is the velocity of light. Expanding this determinant leads to a 10'th order algebraic equation for K_z as a function of K_y.

For a given K_x in the range $-\infty < K_x < \infty$ there will be 10 values of K_z satisfying the determinental equation but only 5 will be admissable (representing field solutions that are bounded as $z \to -\infty$ and have the form of out going waves in the region $z < 0$). For each usable K_z it is necessary to solve the homogeneous system for the corresponding field amplitudes U_i, ψ_i.

Thus U_i and E_i can be expressed as follows:

$$U_i = \int_{-\infty}^{\infty} \sum_{n=1}^{5} A_n(K_x)\, U_i^{(n)}(K_x)\, e^{-jK_z^{(n)}(\bar{z}-\bar{z}_o)}\, e^{jK_x(x-x_o)}\, dK_x$$

$$\frac{E_i}{k_o} = \int_{-\infty}^{\infty} \sum_{n=1}^{5} A_n(K_x)\, \psi_i^{(n)}(K_x)\, e^{-jK_z^{(n)}(\bar{z}-\bar{z}_o)}\, e^{jK_x(\bar{x}-\bar{x}_o)}\, dK_x \quad . \tag{53}$$

where $A_n(K_x)$ are unknown amplitude coefficients to be determined by an application of the boundary conditions. The magnetic field in the crystal medium and in the vacuum can be written in a similar fashion and is derivable from the equation

$$\nabla \times \vec{E} = j\omega\mu_o\vec{H} \quad .$$

The boundary conditions imposed on the field solutions at $\bar{z} = 0$ are as follows:

Continuity of T_{3j} $\quad j = 1, 2, 3$

Continuity of E_1 and E_2

Continuity of H_1 and H_2 .

The imposition of these conditions leads to the following set of equations in the amplitude coefficients A_o, B_o, A_n. The limiting case $\bar{z}_o \to 0$ has been taken in the following since the electrodes will be located on the crystal surface at $\bar{z} = 0$.

Continuity of T_{3j} $j = 1, 2, 3$

$$\sum_{n=1}^{5} \{[jK_x C_{15} - jK_z^{(n)} C_{55}]\, U_1^{(n)} + [jK_x C_{56} - jK_z^{(n)} C_{45}]\, U_2^{(n)}$$

$$+ [jK_x C_{55} - jK_z^{(n)} C_{35}]\, U_3^{(n)} - e_{15}\psi_1^{(n)} - e_{25}\psi_2^{(n)} - e_{35}\psi_3^{(n)}\}\, A_n = 0$$

$$\sum_{n=1}^{5} \{[jK_x C_{14} - jK_z^{(n)} C_{45}]\, U_1^{(n)} + [jK_x C_{46} - jK_z^{(n)} C_{44}]\, U_2^{(n)}$$

$$+ [jK_x C_{45} - jK_z^{(n)} C_{34}]\, U_3^{(n)} - e_{14}\psi_1^{(n)} - e_{24}\psi_2^{(n)} - e_{34}\psi_3^{(n)}\}\, A_n = 0 \quad (54)$$

$$\sum_{n=1}^{5} \{[jK_x C_{13} - jK_z^{(n)} C_{35}]\, U_1^{(n)} + [jK_x C_{36} - jK_z^{(n)} C_{34}]\, U_2^{(n)}$$

$$+ [jK_x C_{35} - jK_z^{(n)} C_{33}]\, U_3^{(n)} - e_{13}\psi_1^{(n)} - e_{23}\psi_2^{(n)} - e_{33}\psi_3^{(n)}\}\, A_n = 0$$

Continuity of E_1, E_2

$$\sum_{n=1}^{5} \psi_1^{(n)} A_n - B_o = -\frac{1}{4\pi}\sqrt{\frac{\mu_o}{\varepsilon_o}}\sqrt{1-K_x^2} \quad (55)$$

$$\sum_{n=1}^{5} \psi_2^{(n)} A_n - A_o = 0$$

Continuity of H_1, H_2

$$\sum_{n=1}^{5} jK_z^{(n)} \psi_2^{(n)} A_n + j \quad 1-K_x^2 \quad A_o = 0$$

$$\sum_{n=1}^{5} [jK_z^{(n)} \psi_1^{(n)} + jK_x \psi_3^{(n)}]\, A_n + \left[j\sqrt{1-K_x^2} + j\,\frac{K_x^2}{\sqrt{1-K_x^2}} \right] B_o = \frac{j}{4\pi}\sqrt{\frac{\mu_o}{\varepsilon_o}}$$

(56)

In practice the solution of equations (54), (55), and (56) would be performed numerically on a computer as a function of K_x.

The integral expressions for the total mechanical displacements and electromagnetic field components follow from the solution of the system of equations described above. An asymptotic evaluation of the resulting integrals may be employed to obtain formal expressions for the physical quantities of significant interest such as the surface wave fields, power in the surface wave, total power input to the crystal by the transducer, and the bulk wave scattered amplitude pattern. The expressions for the aforementioned quantities are very formidable and would require an extensive amount of numerical computation to obtain even limited information. Consequently, it was decided to abandon this approach and the numerical implementation of the theoretical analysis was not carried out.

IV. COMPUTER PROGRAM OUTLINES

This section describes the use and programming format of the computer programs which were written to implement the numerical analysis of the various surface wave propagation problems described in Section II.

1. Surface Waves on Piezoelectric Crystals in the Presence of Infinitesimally Thin Electric and "Magnetic" Conductors

This computer program is divided into two parts: Part A is concerned with an isotropic elastic conductor (such as gold) of finite thickness above a piezoelectric substrate (such as lithium niobate); Part B is concerned with an infinitesimally thin electric or magnetic conductor above a piezoelectric substrate. All information necessary for the operation of the program is described below. For example, an initial guess of the surface wave velocity is required. From this information, the program refines the initial guess, resulting in a velocity accurate to input specifications.

The program is set up to run on an IBM 7094, and the form of input is FORTRAN Namelist input. Although it is discussed in this document, it is suggested that those not familiar with Namelist input read the appropriate sections in a Fortran manual.

Deck Setup

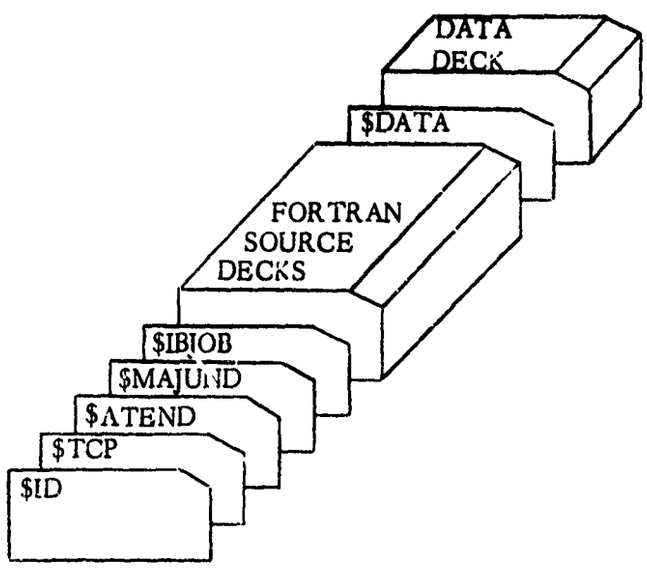

The $ID and $TCP control cards must be supplied by the user; the remaining control cards are already in the program deck. The data deck (i.e., the input data for the program) utilizes Namelist input. Two input sections are required: the first describes the parameters of the substrate crystal; the second provides the remainder of the information necessary for the execution of the program.

The first data set is called CONST. This set includes the piezoelectric, elastic and dielectric constants. Column 2 of the data card contains a dollar sign ($) and columns 3-7 contain the letters CONST. The constants begin in column 9 of the first card and continue up to column 72; they then continue to columns 2-72 of each succeeding card for as many cards as needed. The general form of the data to be input is:

Variable name = 1st value, 2nd value, ... , last value .

For example, the piezoelectric constants (e_{ip}), called P in the program, could be input as:

P = 0.,0.,0.,0.,3.7,-2.5, ...,0. ,

There are 18 piezoelectric constants and they should be input in the following order:

e_{11}

e_{12}

e_{13}

e_{14}

e_{15}

e_{16}

e_{21}

e_{22}

e_{23}

e_{24}

e_{25}

e_{26}

e_{31}

e_{32}

e_{33}

e_{34}

e_{35}

e_{36}

i.e. $P = e_{11}, e_{12}, \ldots, e_{36}$, .

In the program the transformed piezoelectric constants e'_{ij} are printed out as

$E_1 = e'_{11}$

$E_2 = e'_{13}$

$E_3 = e'_{14}$

$E_4 = e'_{15}$

$E_5 = e'_{16}$

$E_6 = e'_{31}$

$E_7 = e'_{33}$

$E_8 = e'_{34}$

$E_9 = e'_{35}$

$E_{10} = e'_{36}$

$E_{11} = e'_{12}$

$E_{12} = e'_{32}$

$E_{13} = e'_{21}$

$E_{14} = e'_{23}$

$E_{15} = e'_{24}$

$E_{16} = e'_{25}$

$E_{17} = e'_{26}$

The transformed constant e'_{22} is never used and therefore is not printed out.

The elastic constants (C_{pq}), called G in the program, are next. Immediately following the comma (,) behind the last piezoelectric constant (excluding blanks), print:

G =

followed by the 21 values of the elastic constants in the following order, separating each variable by a comma:

C_{11}

C_{22}

C_{33}

C_{12}

C_{13}

C_{14}

C_{15}

C_{16}

C_{23}

C_{24}

C_{25}

C_{26}

C_{34}

C_{35}

C_{36}

C_{44}

C_{45}

C_{46}

C_{55}

C_{56}

C_{66}

In the program the transformed elastic constants C'_{ij} are printed out as:

$C_1 = c'_{11}$

$C_2 = c'_{13}$

$C_3 = c'_{14}$

$C_4 = c'_{15}$

$C_5 = c'_{33}$

$C_6 = c'_{34}$

$C_7 = c'_{35}$

$C_8 = c'_{36}$

$C_9 = c'_{44}$

$C_{10} = c'_{45}$

$C_{11} = c'_{46}$

$C_{12} = c'_{55}$

$C_{13} = c'_{56}$

$C_{14} = c'_{66}$

$C_{15} = c'_{16}$

$C_{16} = c'_{12}$

$C_{17} = c'_{25}$

$C_{18} = c'_{26}$

$C_{19} = c'_{24}$

$C_{20} = c'_{23}$

The transformed constant c'_{22} is not used and therefore not printed out.

The dielectric constants (ϵ_{ij}), called EPS in the program, are the last constants to be entered. They should be entered following the comma after the last value of the elastic coefficients, as

EPS =

followed by 9 values of EPS in the following order, separating each variable by a comma:

ϵ_{11}

ϵ_{12}

ϵ_{13}

ϵ_{21}

ϵ_{22}

ϵ_{23}

ϵ_{31}

ϵ_{32}

ϵ_{33}

In the program the transformed dielectric constants ϵ'_{ij} are printed out as:

$T_1 = \epsilon'_{11}$

$T_2 = \epsilon'_{13}$

$T_3 = \epsilon'_{33}$

$T_4 = \epsilon'_{21}$

$T_5 = \epsilon'_{23}$

The transformed constant ϵ'_{22} is never used and therefore is not printed out.

After the last value of EPS, namely ϵ_{33}, print a dollar sign ($) instead of a comma. That is,

$$EPS = \epsilon_{11}, \epsilon_{12}, \epsilon_{13}, \epsilon_{21}, \epsilon_{22}, \epsilon_{23}, \epsilon_{31}, \epsilon_{32}, \epsilon_{33}\$ \quad .$$

This signals the end of the first data set.

The second data set is called "INPUT." $INPUT must be printed in columns 2-7 of the next card (following the EPS data). Then each input parameter should be entered, followed by a comma (except the last value, which should be followed by a dollar sign, $). The following is a definition of each input parameter (unless otherwise stated, the input parameters will refer to both Part A and Part B):

Input Name	Equation Names	Definition
MUA	μ (Part A)	Lame's constants for elastic conductor
LAMDAA	λ (Part A)	
RHOA	ρ	Mass density of elastic conductor
LAMDAB	λ (Part B)	Euler Angles
MUB	μ (Part B)	
NUB	ν (Part B)	
RHOB	ρ (Part B)	Mass density of crystal
VS	v_s	Initial guess to a velocity. This initial value will be used to find a final velocity, $\bar{v}_s$ such $\lvert f(\bar{v}_s) \rvert < \epsilon$, where ϵ is input.
KS	k_s	Can take on two values: $k_s = 0$ for Part B $k_s = 1$ for Part A
EPSLON	ϵ	A positive number used as a convergence criterion. When $\lvert f(v_s) \rvert < \epsilon$, then v_s is assumed to be the root required.
WH	ωh	Normalized height of conducting wall or magnetic wall (Part B) Normalized thickness of elastic conductor (Part A). To input $\omega h = \infty$, set WH > 10^{10}.
WXA	ωx_a (Part A)	Normalized distance into elastic conductor
WXB	ωx_b (Part A)	Normalized distance into crystal
KL	K_L (Part B)	K_L is normally 0. However, if the electric wall case is being run (see K_M) and if wh = 0, then K_L should be set to 1.
KM	K_M (Part B)	This can take on two values: $K_M = 0$ electric wall $K_M = 1$ magnetic wall

Input Name	Equation Names	Definition
MAX	--	Since an iteration scheme is used for convergence for a final root v_s, there must be an indication of how many iterations are to be executed before divergence is assumed. Hence, MAX should be the maximum number of iterations the user wishes the program to make (usually 10). If MAX is set to zero (MAX = 0) the determinant $\lvert f(\bar{v}_s) \rvert$ will be evaluated for the particular v_s value input – the iteration scheme will not be used. This option may be useful if there is difficulty in determining the range in which v_s lies.
ICHECK	--	A logical parameter which controls the use of a checkout option. If ICHECK = .FALSE., all FINAL ANSWERS* are computed in addition to the evaluation of the determinant $\lvert f(\bar{v}_s) \rvert$. If ICHECK = .TRUE., FINAL ANSWERS are not computed – evaluation of the determinant only. This option was included for use when MAX = 0.
DVS	Δv_s	Increment to be used for v_s when ICHECK = .TRUE. (DVS ≥ 0.)
VSMAX	$v_{s_{max}}$	Maximum value of v_s to be used when DVS $\neq 0$.
EPSO	ϵ_o	Permittivity of free space
WX	ωx (Part B)	Normalized distance into crystal
DNU	$\Delta\nu$	If the user wishes to vary ν (NUB) from some initial value, ν, to some final value, ν_{max}, in steps of $\Delta\nu$, then set DNU equal to the steps desired; also, see NUMAX.
NUMAX	ν_{max}	The maximum value of ν (see DNU). ν_{max} is only used when DNU $\neq 0$.
DWX	$\Delta\omega x$	An increment for ωx, similar to DNU. If DWX = 0, then ωx is not incremented.

*The FINAL ANSWERS consist of the partial field relative amplitudes (Eta), stress components, strain components, time average power flow, electric and mechanical displacements, electric potential, and electric field.

Input Name	Equation Names	Definition
WXMAX	ωx_{max}	The maximum value of ωx (see DWX). ωx_{max} is only used when DWX $\neq 0$.
TITLE	--	An alphanumeric array of 24 characters or less used to describe the type of crystal, such as lithium niobate. This is input in the following manner: TITLE = nH name of crystal, where n is the number of characters following the H (including blanks). For example TITLE = 6HQUARTZ
REPEAT	--	REPEAT is a logical variable and in its usage, can take only one value: .TRUE. If there are no more cases to run after the current case, REPEAT does not need to be input. If there will be another case to follow, but the crystal coefficients remain the same, then, again, REPEAT does not need to be input. However, if another case is to be run and the coefficients are different, then REPEAT needs to be input as .TRUE. This means that the $CONST data will have to be input again (in the other cases above, $CONST would not have to be input again).
HXAGNL	--	Parameter which controls the calculation of betas (β's) for a hexagonal crystal (such as zinc oxide) .TRUE. — hexagonal crystal (use special technique) .FALSE. — non-hexagonal crystal (use normal procedure)
VSINC	--	VSINC = .TRUE. – New estimates of initial velocity (v_S) are computed using a linear fit to the two previous values. (Used when NUB varies over a range NUB, NUB + DNU, ... , NUMAX) VSINC = .FALSE. – The same initial estimate of velocity is used for all values over the specified range of NUB.

The following input parameters are all logical variables which are assumed to be false (.FALSE.) in the program. They are used as switches indicating whether or not intermediate calculations are to be printed. If any one, or any combination of these parameters are input as true (.TRUE.), then certain intermediate data will print, according to the following:

ROOTS	Print the roots of the polynomial each time they are calculated.
COEFF	Print the constants E, C, and T (the transformed piezoelectric, elastic, and dielectric constants) calculated from the constants P, G, and EPS.
DETERM	Print the L matrix and the value of the determinant.
POLY	Print the coefficients of the 8'th order polynomial.
BETA	Print the values of β_{ij}.
ALPHA	Print α_A's, Part A.
ALL	Print all of the above.

The manner in which the above listed parameters in the $INPUT data set are input is best illustrated by an example (assume Part B is being run):

```
$INPUT      MUB = 90., LAMDAB = 90., NUB = 100., RHOB = 4700.,
            VS = 3400., KS = 0, EPSLON = 1.E-11, WH = 0, KL = 1,
            KM = 0, WX = 0., DWX = 10., WXMAX = 100.,
            title = 15HLITHIUM NIOBATE
```

ωh is zero in the above example. To input $\omega h = \infty$, set $\omega h > 10^{10}$. Note that some of the values discussed in the list are not present in the above example. This is because either they are not required or the program assumed nominal values. A nominal value is a value that a parameter will take on if no other value is input. In the above example, MAX, EPSO, and DNU take on their nominal values of 10, 8.85×10^{-12}, and 0, respectively. It is not necessary to input NUMAX since DNU = 0; all parameters referring to Part A are not necessary since Part B is being run; and all the logical parameters take on their nominal value of false. The following is a complete list of nominal values:

Parameter	Nominal Value
MUA	2.85×10^{10}
LAMDAA	1.5×10^{11}
RHOA	1.888×10^{4}
VS	3000
EPSLON	1×10^{-11}
KL	0
KM	0
MAX	10
EPSO	8.85×10^{-12}
DNU	0
DWX	0
DVS	0
TITLE	15HLITHIUM NIOBATE
ROOTS	.FALSE.
COEFF	
DETERM	
POLY	
BETA	
ALL	
REPEAT	
ALPHA	

Sample Data Decks:

The following sample data deck, illustrated on the attached code sheet, gives an example of three data runs: the first is a 90-90-100 degree cut of lithium niobate. The second is the same, except for a new value of dh. The third is a 0, 0, -90 cut of quartz (note that REPEAT is set to true in the second case, just prior to the case when new coefficients are to be input).

HUGHES AIRCRAFT COMPANY
7094 FORTRAN CODING SHEET

PAGE _____ OF _____

NAME _____ PHONE _____ DATE _____ LOG NO. _____ PROB. NO. _____ PROG. NO. _____

IDENTIFICATION

```
$CONST P = 4*0., 3.7, -2.5, -2.5, 2.5, 0., 3.7, 0., 0., 0.2, 0.2,
       1.3, 0., 0., 0.,
       S = 2.03E11, 2.03E11, 2.45E11, 0.55E11, 0.75E11, 0.09E11,
       0., 0., 0.75E11, -0.09E11, 5*0., 0.60E11, 0., 0., 0.60E11,
       0.09E11, 0.75E11,
       EPS = 3.9E-10, 3*0., 3.9E-10, 3*0., 2.57E-10$
$INPUT MUB = 90., LAMDAB = 90., NUB = 100., RHOB = 4700., VS = 3400.,
       KS = 0, WH = 0., KL = 1, WX = 0.$
$INPUT NH = 2000., REPEAT = .TRUE.$
$CONST P = 0.171, -0.171, 0., -0.0406, 6*0., 0.0406, -0.171, 6*0.,
       S = 2*3.67AE10, 1.072E11, 6.99E9, 11.91E9, -17.91E9, 2*0.,
       11.91E9, -17.91E9, 5*0., 57.94E9, 2*0., 57.94E9, -17.91E9,
       39.08E9,
       EPS = 39.21E-12, 3*0., 39.21E-12, 3*0., 41.03E-12$
$INPUT MUB = 0., LAMDAB = 0., NUB = -90., KTIME = 0$
```

The following is a description of the program flow diagram provided at the end of this section.

First, the nominal data values[1] are set up in the program. These values are assumed by certain parameters in the program unless new values are specified. Following this the program reads in the elastic (G), piezoelectric (P), and dielectric (EPS) constants (CONST DATA) of the substrate medium. Finally, the remaining input data is read in (INPUT).

Next, subroutine SETCTE is called to perform the Euler transformation to obtain the elastic (CC), piezoelectric (CE), and dielectric (CT) constants relative to the input coordinate system as specified by the constants λ, μ, and ν. At this point subroutine ROOT is called to perform the calculations leading to the evaluation of the determinant of the boundary condition matrix (L matrix of the analysis). The determinant is referred to as F(VS) since it is evaluated as a function of velocity (VS).

There is an option in the program to use a root finding scheme to minimize $|F(VS)|$ or simply to increment VS in steps of DVS and calculated F(VS) at each value. To perform these various calculations at a particular velocity (VS) ROOT calls subroutine F which is described in detail below (in Determination of F(VS)).

After exiting from ROOT and returning to the main program logical checks are made to establish the type of case considered in ROOT. Depending upon the results of these checks the values of the amplitudes of the partial surface wave fields are computed ($A^{(\ell)}$ of analysis section). In the program these are called ETA(1), ETA(2), etc. The program now proceeds to compute the magnitude (MAG U(I)) and phase (PHASE U(I)) of the mechanical displacements ($\bar{U}(I)$, I=1, 2, 3) and electric potential ($\bar{U}(4)$). Next subroutine P1FUN is called to compute the time average flow (P1M, P2M) followed by the computation of the stress components (TW31, TW32, TW33, TW11, TW12, TW22) in subroutine TFUN. Subroutine SFUN then implements the calculation of the strain components (S11, S33, S12, S13, S23). Finally the electric field (E1, E3) and electric displacement (D1, D2, D3) are computed. All the above quantities are evaluated as a function of normalized distance (WX) into the crystal. They can be computed at incremented values of WX for any specified initial and final values.

The velocity (VS) can be incremented if desired (up to some specified maximum value, VSMAX) and the steps in ROOT and that which follows are repeated for each new velocity. Thus it is possible to plot the determinant as a function of velocity. After VSMAX is reached there is an option to increment the third Euler angle (NU) and repeat the steps from SETCTE on. When this has been completed the program returns to read in new CONST DATA if the crystal is being changed or to read in new INPUT DATA if the crystal is to remain unchanged but the orientation is to be changed. After all data from both sources has been exhausted the program stops.

Determination of F(VS)

Subroutine F calls subroutine STRIP to compute the coefficients of the eighth order polynomial equation in α.* Next subroutine CROOT calculates the 8 roots (ALFA(I), I = 1,8) of the polynomial equation by Muller's method. If the medium is non-piezoelectric the solution for the roots involves two extraneous roots which are rendered useless by setting them equal to -10-10j. The roots with positive real part are chosen (ALFAB(I), I=1,K).

If the medium is piezoelectric and the number of roots with positive real part (K) is equal to 4 the program proceeds to calculate the relative amplitudes ($\beta_i^{(\ell)}$ of the analysis section) of the displacement and potential corresponding to each α. These amplitudes are referred to as BETAB(I,J) in the program. The matrix (ACAP, $\hat{A}$ for simplicity) of coefficients of the amplitudes ($\beta_i^{(\ell)}$) is set up for each α. If the crystal is not hexagonal non-degenerate cases are solved by setting $\beta_4^{(\ell)} = 1$ and solving the first three equations of the system for $\beta_i^{(\ell)}$ i = 1, 2, 3. If the crystal is hexagonal one of the α's naturally leads to an ill-conditioned system if the first three equations are solved for $\beta_1^{(\ell)}$, $\beta_2^{(\ell)}$, and $\beta_3^{(\ell)}$ in terms of $\beta_4^{(\ell)}$. Thus $\beta_1^{(\ell)}$ is set equal to 10^{-10} and the system composed of the second, third, and fourth equation are solved for $\beta_2^{(\ell)}$, $\beta_3^{(\ell)}$, $\beta_4^{(\ell)}$. If the case is degenerate the $\beta_i^{(\ell)}$'s are calculated in the fashion indicated in the analysis.

If $K < 4$ the procedure for calculating the $\beta_i^{(\ell)}$'s is dependent upon the value of K. If $K \leq 1$ the case terminates since no solution is possible with only one available value of α. If $K > 1$, $\hat{A}_{12}$ and $\hat{A}_{23}$ are investigated to see if they are identically zero.

*See Appendix IV.

If either $\hat{A}_{12}$ or $\hat{A}_{23}$ is not identically zero the case cannot be degenerate. The program proceeds in one of two possible ways. If the crystal is non-piezoelectric and K = 3 the $\beta_i^{(\ell)}$'s are calculated as indicated in the analysis (i.e. $\beta_4^{(\ell)} = 0$, $\beta_3^{(\ell)} = 1$ and the first two equations of the system are solved for $\beta_1^{(\ell)}$ and $\beta_2^{(\ell)}$). If either $K \neq 3$ or the crystal is piezoelectric the case terminates. This is due to the fact that if the crystal is piezoelectric and non-degenerate, four α's are necessary for a solution in the general case.

If both $\hat{A}_{12}$ and $\hat{A}_{23}$ are equal to zero, the non-piezoelectric case is degenerate and is treated as follows. $|\hat{A}_{22}|$ is calculated for each value of α. For K = 2 it is necessary that $|\hat{A}_{22}|$ be non-zero for both values of α (due to the large magnitude of the individual terms in $\hat{A}_{22}$ it is sufficient to compare $|\hat{A}_{22}|$ to 10^7). If $|\hat{A}_{22}| > 10^7$ for both values of α then we may set

$$\beta_2^{(\ell)} = 0, \ \beta_3^{(\ell)} = 10^{-10}, \ \text{and} \ \beta_1^{(\ell)} = -\frac{\hat{A}_{13}^{(\ell)}}{\hat{A}_{11}^{(\ell)}} \cdot 10^{-10} \quad .$$

Otherwise the case is terminated. If K = 3 the minimum value of $|\hat{A}_{22}|$ is calculated and the corresponding α is discarded. The β's are then calculated for the other two α's from the above formulas.

If $\hat{A}_{12}$ and $\hat{A}_{23}$ are identically equal to zero and the crystal is piezoelectric the program proceeds as follows. $\hat{A}_{24}$ is tested and if equal to zero the first degenerate case of the analysis section must be considered. The case is terminated if K = 2 but if K = 3 a check is made of $|\hat{A}_{22}|$. If $|\hat{A}_{22}| > 10^7$ for all three α's, the β's are calculated as indicated in the analysis. If $|\hat{A}_{22}| < 10^7$ for any of the α's the case is terminated.

If $\hat{A}_{22} \neq 0$ a check of $\hat{A}_{14}$ and $\hat{A}_{34}$ is made. If they are not both identically equal to zero the case is terminated. If both are equal to zero the second degenerate case of the analysis is considered. In this case $|\hat{A}_{22}\hat{A}_{44} - \hat{A}_{24}^2|$ (TERMJ in the program) is calculated for each α. If TERMJ $\geq 10^{-5}$ for two of the α's the (β_1, β_3) split of the analysis arises and the β's are appropriately calculated. If TERMJ $< 10^{-5}$ for two of the α's the (β_2, β_4) split arises and the β's are appropriately calculated. Under any other conditions the case is terminated.

Now that the α's and β's are known the boundary condition matrix $(\hat{L})$ is set up and its determinant evaluated. If the problem of a conducting elastic medium in contact with a piezoelectric or elastic medium is being considered

the α's and β's appropriate to the conductor are first evaluated then the appropriate boundary condition matrix is set up and its determinant evaluated. This completes the computation of F(VS) whereupon the subroutine is exited back to the main program.

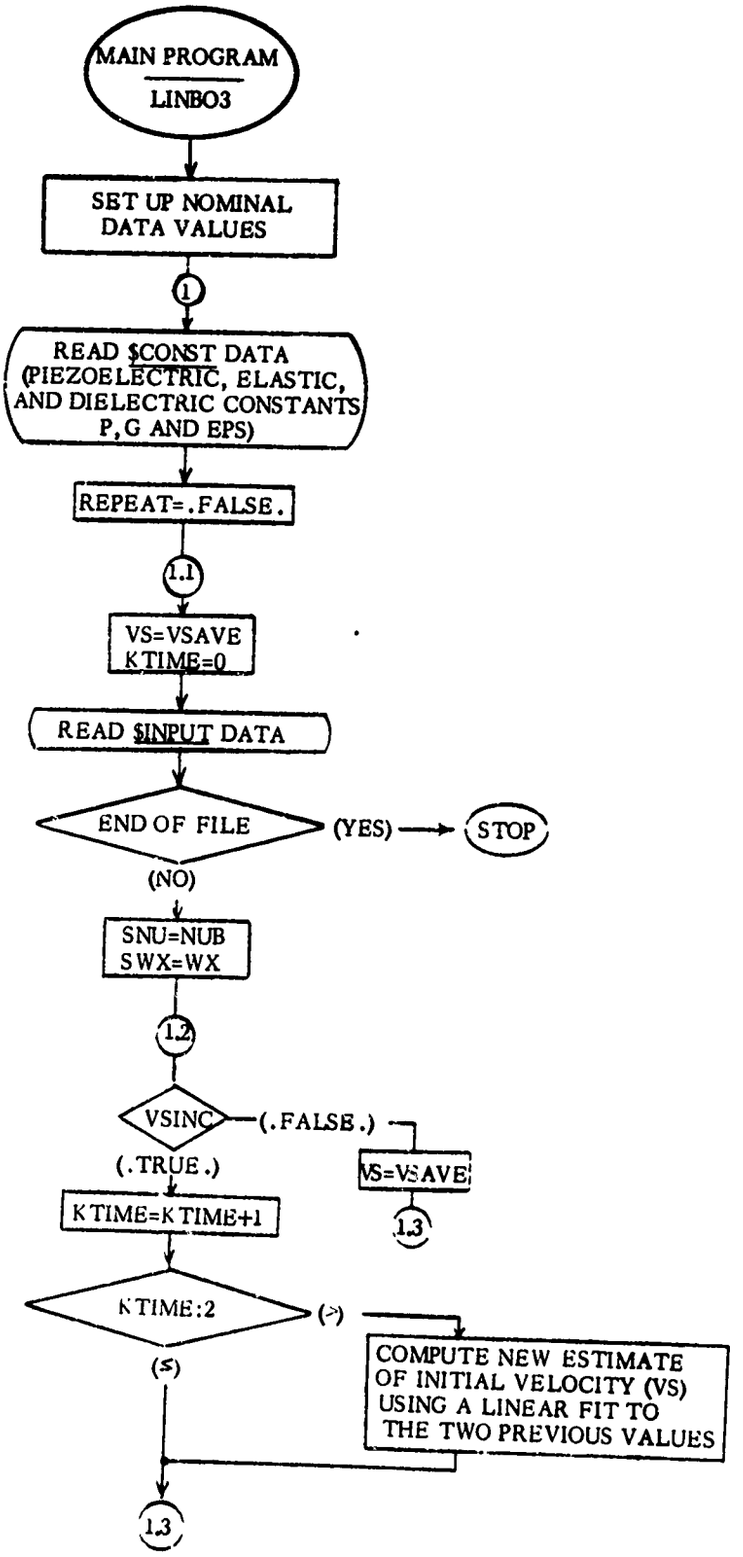
MAIN PROGRAM
LINBO3
SET UP NOMINAL DATA VALUES
1
READ $CONST DATA (PIEZOELECTRIC, ELASTIC, AND DIELECTRIC CONSTANTS P, G AND EPS)
REPEAT=.FALSE.
1.1
VS=VSAVE
KTIME=0
READ $INPUT DATA
END OF FILE
(YES)
STOP
(NO)
SNU=NUB
SWX=WX
1.2
VSINC
(.FALSE.)
VS=VSAVE
1.3
(.TRUE.)
KTIME=KTIME+1
KTIME:2
(>)
COMPUTE NEW ESTIMATE OF INITIAL VELOCITY (VS) USING A LINEAR FIT TO THE TWO PREVIOUS VALUES
(≤)
1.3

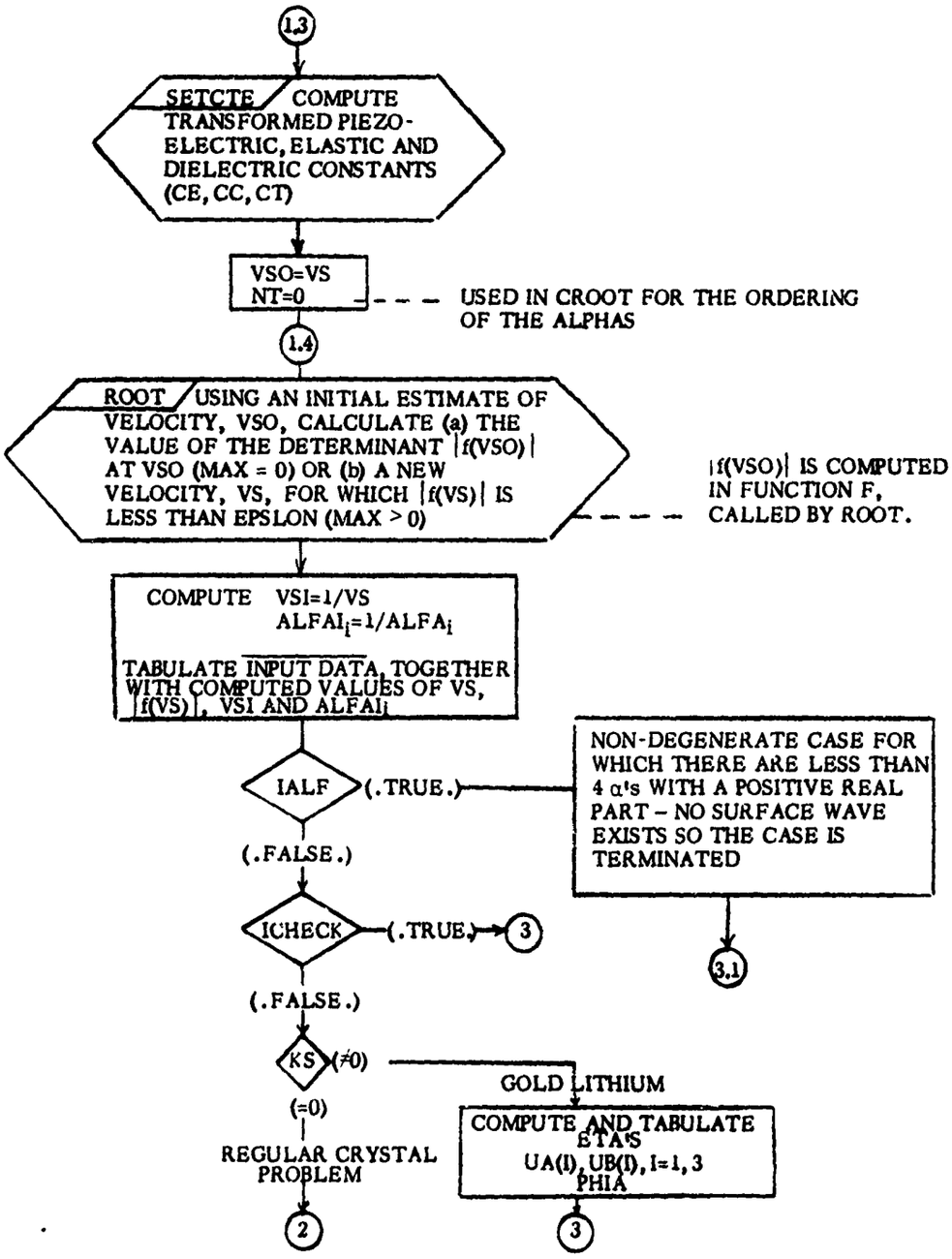
1.3
SETCTE / COMPUTE TRANSFORMED PIEZO-ELECTRIC, ELASTIC AND DIELECTRIC CONSTANTS (CE, CC, CT)
VSO=VS
NT=0
USED IN CROOT FOR THE ORDERING OF THE ALPHAS
1.4
ROOT / USING AN INITIAL ESTIMATE OF VELOCITY, VSO, CALCULATE (a) THE VALUE OF THE DETERMINANT |f(VSO)| AT VSO (MAX = 0) OR (b) A NEW VELOCITY, VS, FOR WHICH |f(VS)| IS LESS THAN EPSLON (MAX > 0)
|f(VSO)| IS COMPUTED IN FUNCTION F, CALLED BY ROOT.
COMPUTE VSI=1/VS
ALFAI_i=1/ALFA_i
TABULATE INPUT DATA, TOGETHER WITH COMPUTED VALUES OF VS, |f(VS)|, VSI AND ALFAI_i
IALF
(.TRUE.)
NON-DEGENERATE CASE FOR WHICH THERE ARE LESS THAN 4 α's WITH A POSITIVE REAL PART – NO SURFACE WAVE EXISTS SO THE CASE IS TERMINATED
3.1
(.FALSE.)
ICHECK
(.TRUE.)
3
(.FALSE.)
KS
(≠0)
GOLD LITHIUM
COMPUTE AND TABULATE ETA'S
UA(I), UB(I), I=1, 3
PHIA
3
(=0)
REGULAR CRYSTAL PROBLEM
2

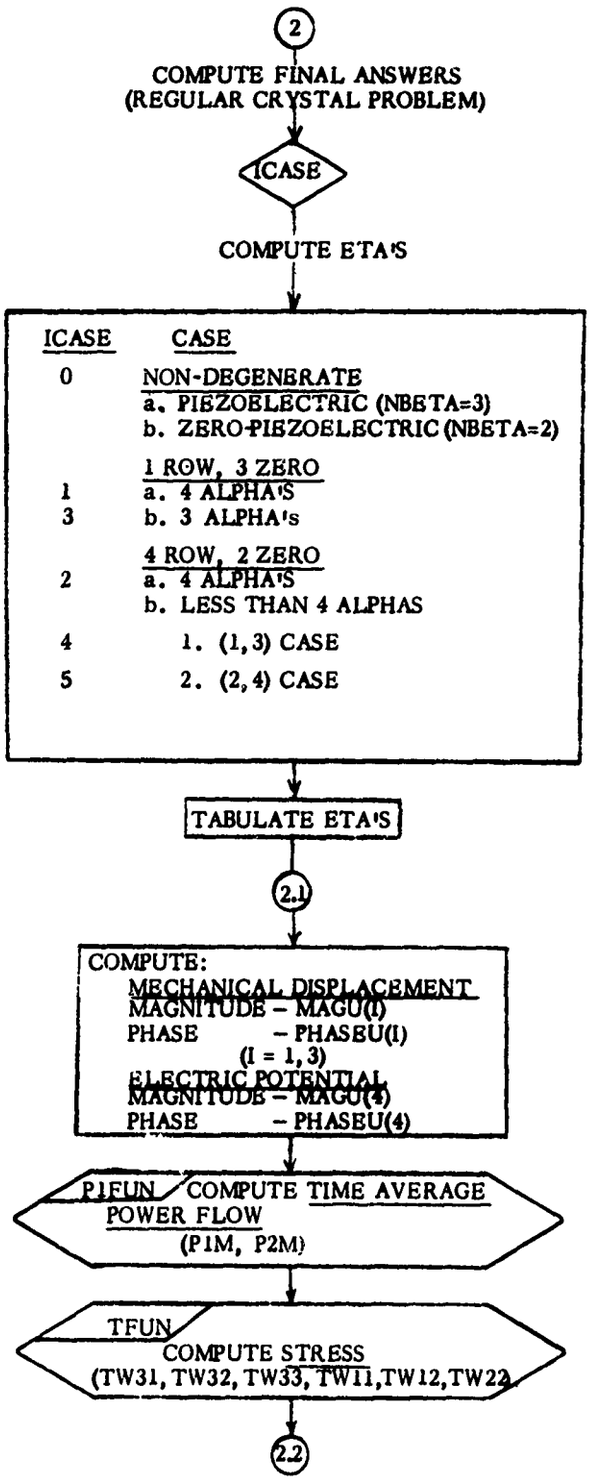
2
COMPUTE FINAL ANSWERS
(REGULAR CRYSTAL PROBLEM)
ICASE
COMPUTE ETA'S
ICASE CASE
0 NON-DEGENERATE
a. PIEZOELECTRIC (NBETA=3)
b. ZERO-PIEZOELECTRIC (NBETA=2)
1 ROW, 3 ZERO
1 a. 4 ALPHA'S
3 b. 3 ALPHA's
4 ROW, 2 ZERO
2 a. 4 ALPHA'S
b. LESS THAN 4 ALPHAS
4 1. (1,3) CASE
5 2. (2,4) CASE
TABULATE ETA'S
2.1
COMPUTE:
MECHANICAL DISPLACEMENT
MAGNITUDE – MAGU(I)
PHASE – PHASEU(I)
(I = 1, 3)
ELECTRIC POTENTIAL
MAGNITUDE – MAGU(4)
PHASE – PHASEU(4)
P1FUN COMPUTE TIME AVERAGE
POWER FLOW
(P1M, P2M)
TFUN
COMPUTE STRESS
(TW31, TW32, TW33, TW11, TW12, TW22)
2.2

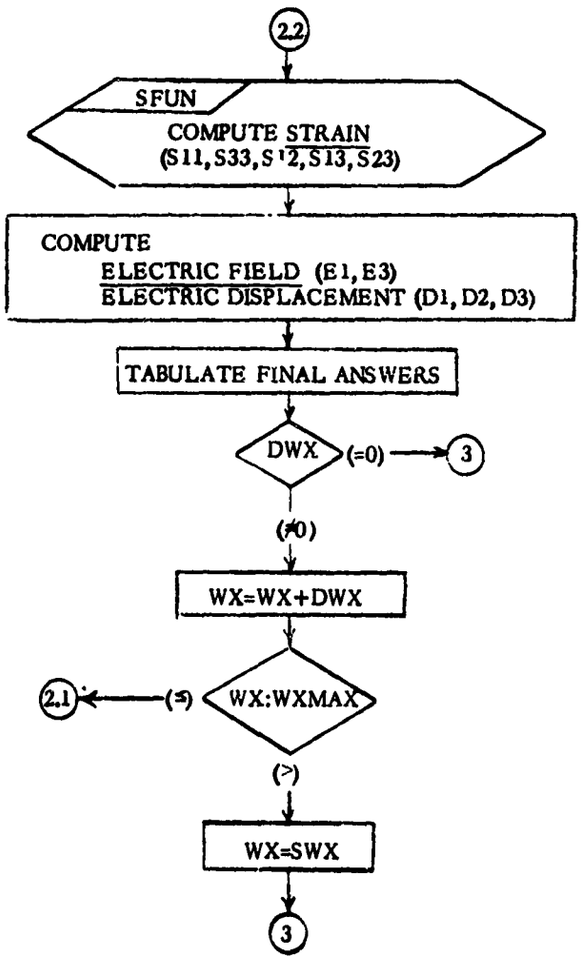
2.2
SFUN
COMPUTE STRAIN
(S11, S33, S12, S13, S23)
COMPUTE
ELECTRIC FIELD (E1, E3)
ELECTRIC DISPLACEMENT (D1, D2, D3)
TABULATE FINAL ANSWERS
DWX
(=0)
3
(≠0)
WX=WX+DWX
WX:WXMAX
(≤)
2.1
(>)
WX=SWX
3

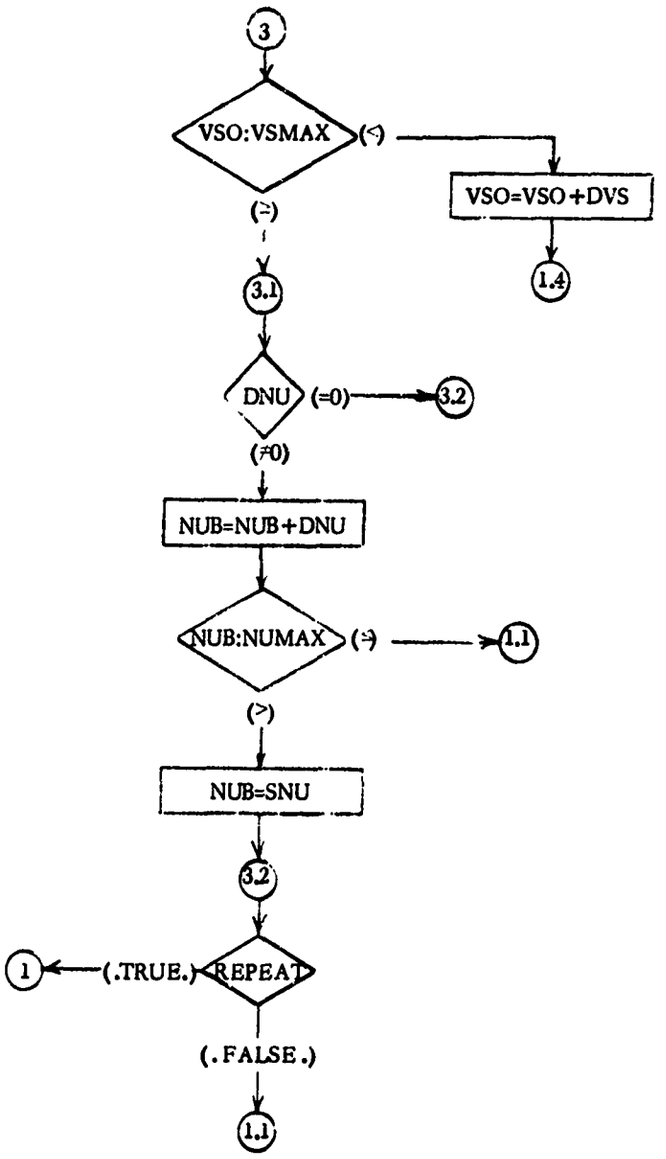
3
VSO:VSMAX
(<)
VSO=VSO+DVS
1.4
(≥)
3.1
DNU
(=0)
3.2
(≠0)
NUB=NUB+DNU
NUB:NUMAX
(≤)
1.1
(>)
NUB=SNU
3.2
1
(.TRUE.)
REPEAT
(.FALSE.)
1.1

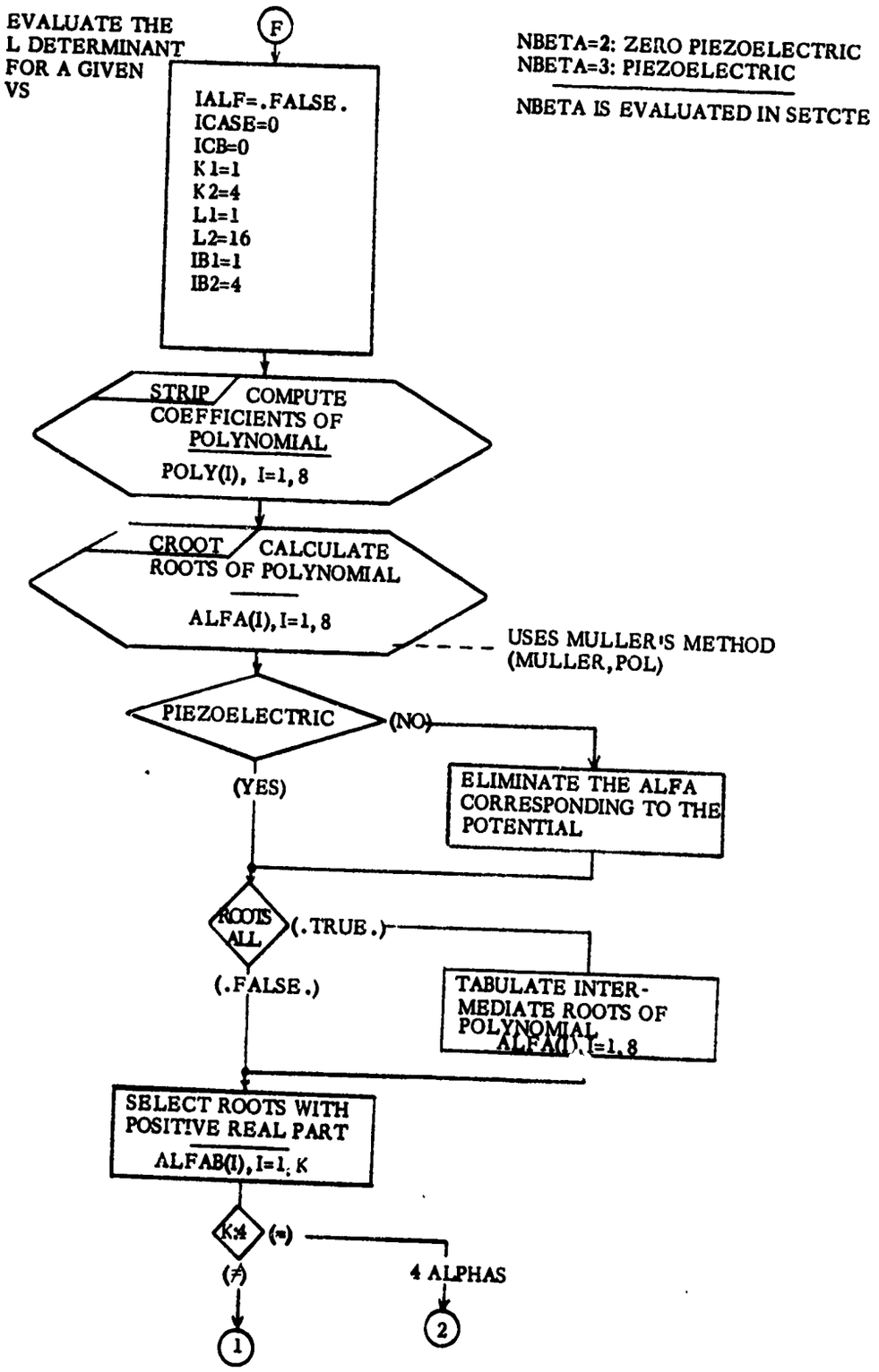
EVALUATE THE
L DETERMINANT
FOR A GIVEN
VS
F
IALF=.FALSE.
ICASE=0
ICB=0
K1=1
K2=4
L1=1
L2=16
IB1=1
IB2=4
NBETA=2: ZERO PIEZOELECTRIC
NBETA=3: PIEZOELECTRIC
NBETA IS EVALUATED IN SETCTE
STRIP
COMPUTE
COEFFICIENTS OF
POLYNOMIAL
POLY(I), I=1,8
CROOT
CALCULATE
ROOTS OF POLYNOMIAL
ALFA(I), I=1,8
USES MULLER'S METHOD
(MULLER,POL)
PIEZOELECTRIC
(NO)
(YES)
ELIMINATE THE ALFA
CORRESPONDING TO THE
POTENTIAL
ROOTS
ALL
(.TRUE.)
(.FALSE.)
TABULATE INTER-
MEDIATE ROOTS OF
POLYNOMIAL
ALFA(I), I=1,8
SELECT ROOTS WITH
POSITIVE REAL PART
ALFAB(I), I=1, K
K≠4
(=)
(≠)
4 ALPHAS
1
2

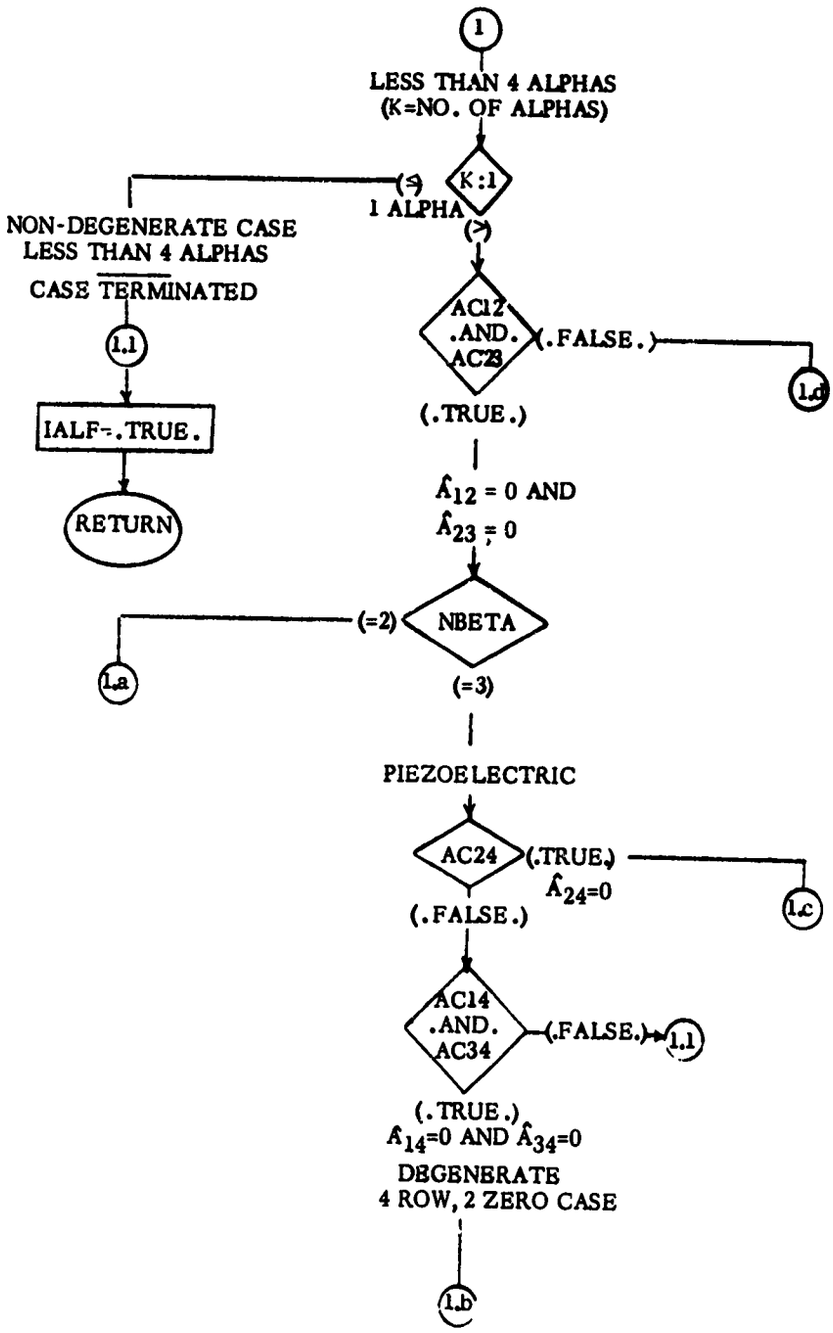
1
LESS THAN 4 ALPHAS
(K=NO. OF ALPHAS)
K:1
(≤)
1 ALPHA
(>)
NON-DEGENERATE CASE
LESS THAN 4 ALPHAS
CASE TERMINATED
1.1
IALF=.TRUE.
RETURN
AC12
.AND.
AC23
(.FALSE.)
1.d
(.TRUE.)
$\hat{A}_{12}$ = 0 AND
$\hat{A}_{23}$ = 0
NBETA
(=2)
1.a
(=3)
PIEZOELECTRIC
AC24
(.TRUE.)
$\hat{A}_{24}$=0
1.c
(.FALSE.)
AC14
.AND.
AC34
(.FALSE.)
1.1
(.TRUE.)
$\hat{A}_{14}$=0 AND $\hat{A}_{34}$=0
DEGENERATE
4 ROW, 2 ZERO CASE
1.b

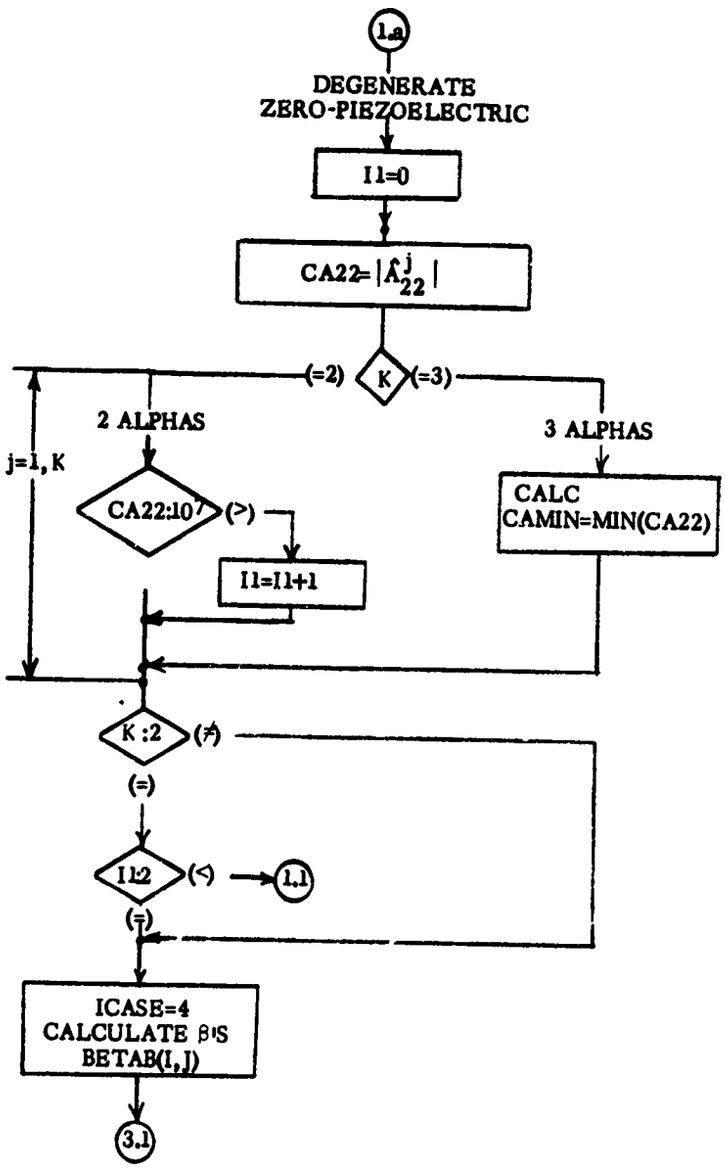
1.a
DEGENERATE
ZERO-PIEZOELECTRIC
I1=0
CA22=|Â22j|
K
(=2)
(=3)
2 ALPHAS
3 ALPHAS
j=1, K
CA22:10^7
(>)
I1=I1+1
CALC
CAMIN=MIN(CA22)
K :2
(≠)
(=)
I1:2
(<)
1.1
(=)
ICASE=4
CALCULATE β'S
BETAB(I,J)
3.1

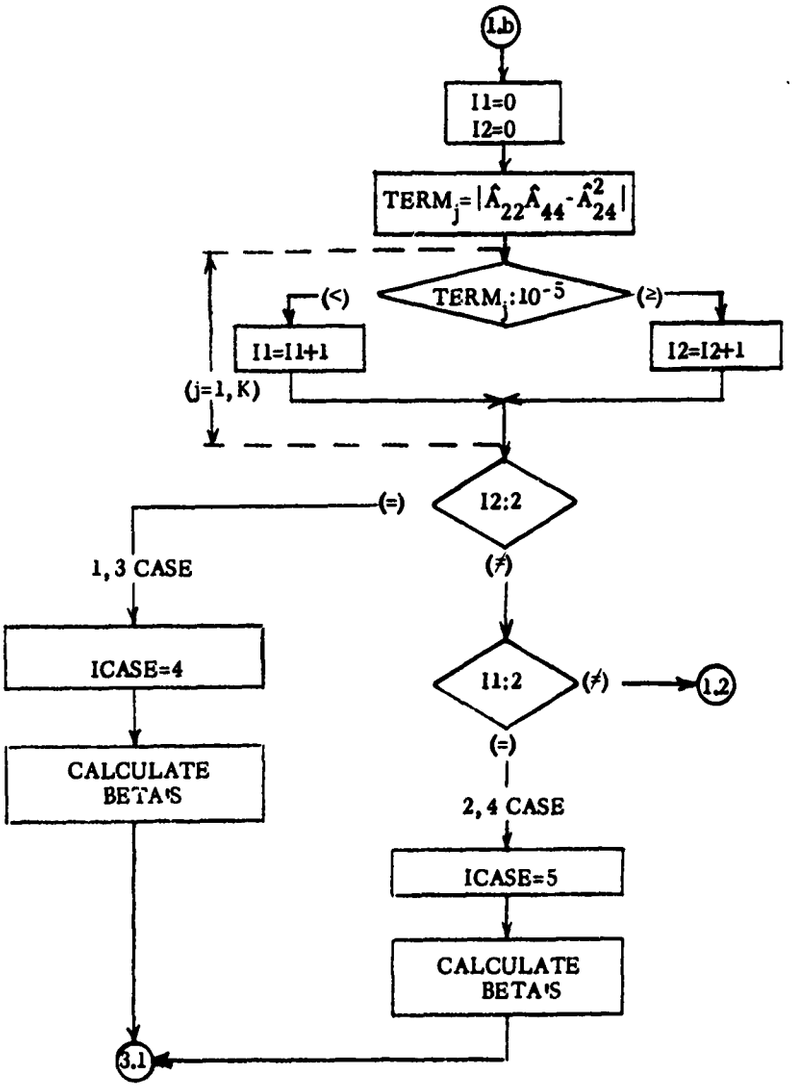
1.b
I1=0
I2=0
TERM_j=|Â_22Â_44-Â_24^2|
TERM_j:10^-5
(<)
(≥)
I1=I1+1
I2=I2+1
(j=1,K)
I2:2
(=)
(≠)
1,3 CASE
ICASE=4
CALCULATE BETA'S
I1:2
(≠)
1.2
(=)
2,4 CASE
ICASE=5
CALCULATE BETA'S
3.1

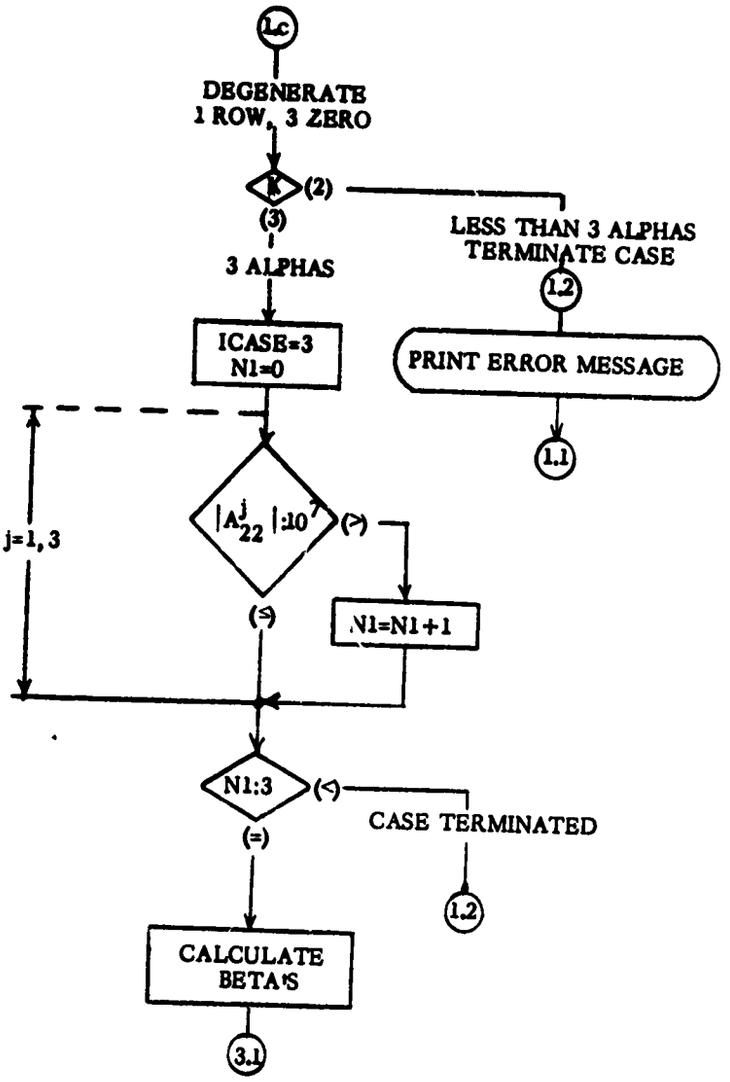
1.c
DEGENERATE
1 ROW, 3 ZERO
K
(2)
(3)
3 ALPHAS
LESS THAN 3 ALPHAS
TERMINATE CASE
1.2
ICASE=3
N1=0
PRINT ERROR MESSAGE
1.1
j=1,3
$|A^j_{22}|:10^7$
(>)
(≤)
N1=N1+1
N1:3
(<)
(=)
CASE TERMINATED
1.2
CALCULATE
BETA'S
3.1

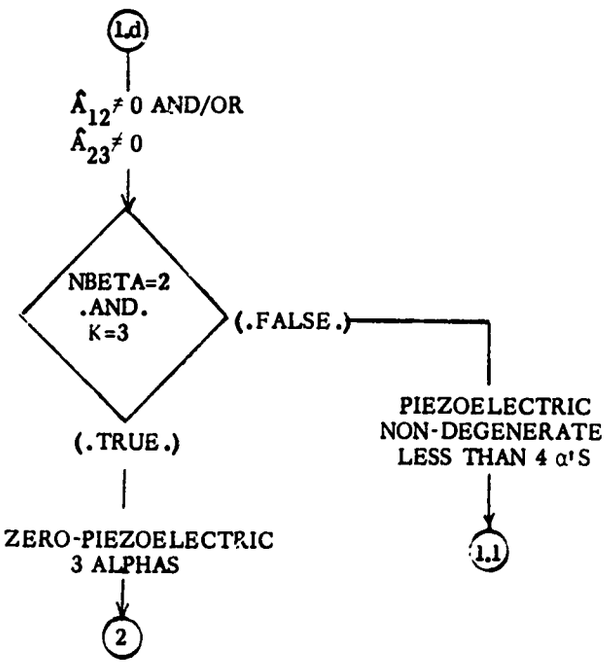
1.d
$\hat{A}_{12} \neq 0$ AND/OR
$\hat{A}_{23} \neq 0$
NBETA=2
.AND.
K=3
(.FALSE.)
PIEZOELECTRIC
NON-DEGENERATE
LESS THAN 4 α'S
1.1
(.TRUE.)
ZERO-PIEZOELECTRIC
3 ALPHAS
2

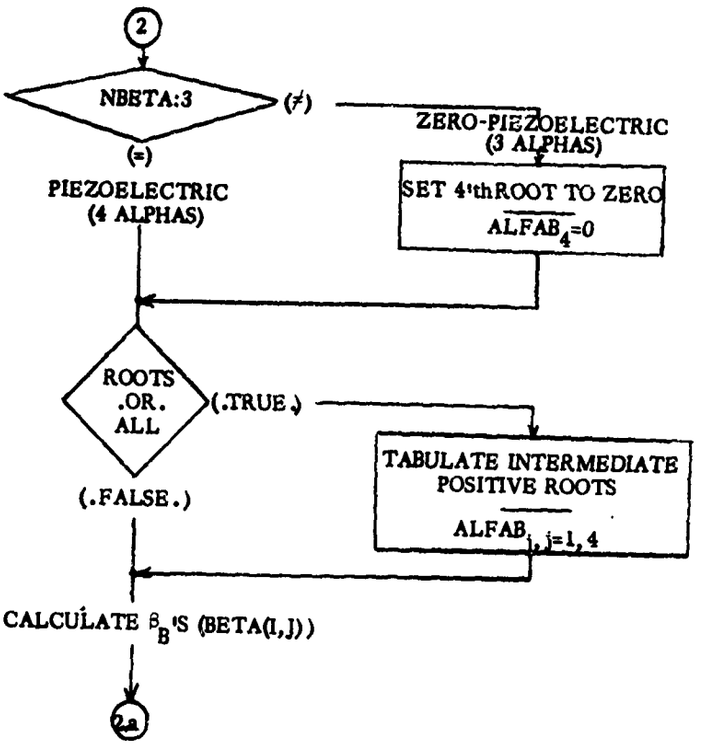
2
NBETA:3
(≠)
ZERO-PIEZOELECTRIC
(3 ALPHAS)
(=)
PIEZOELECTRIC
(4 ALPHAS)
SET 4'thROOT TO ZERO
ALFAB4=0
ROOTS
.OR.
ALL
(.TRUE.)
TABULATE INTERMEDIATE
POSITIVE ROOTS
ALFABi, i=1, 4
(.FALSE.)
CALCULATE βB'S (BETA(I,J))
2a

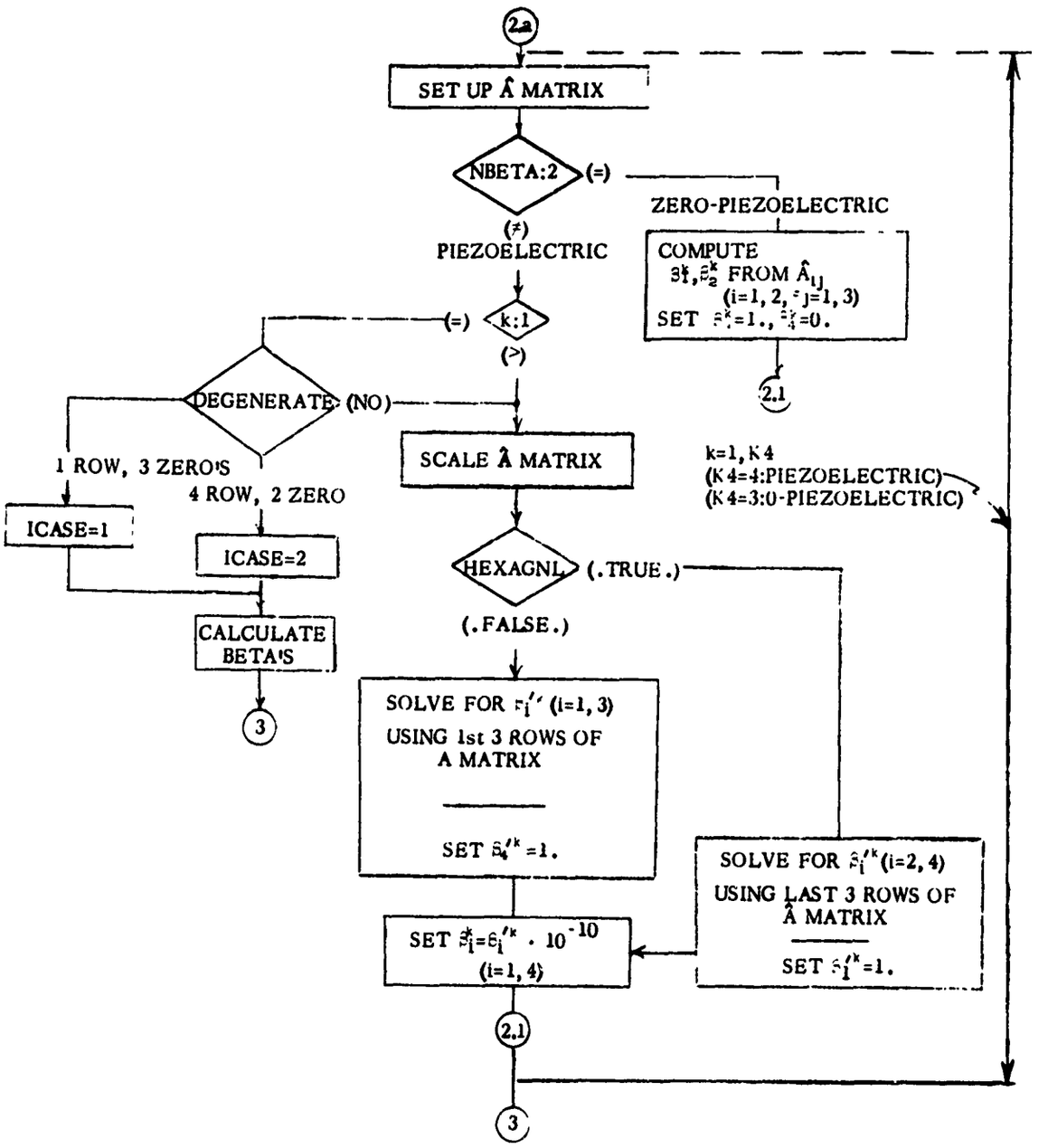
2a
SET UP Â MATRIX
NBETA:2
(=)
ZERO-PIEZOELECTRIC
(≠)
PIEZOELECTRIC
COMPUTE
β_1^k, β_2^k FROM $\hat{A}_{ij}$
(i=1, 2, j=1, 3)
SET β_3^k=1., β_4^k=0.
2.1
(=)
k:1
(>)
DEGENERATE
(NO)
1 ROW, 3 ZERO'S
4 ROW, 2 ZERO
ICASE=1
ICASE=2
CALCULATE BETA'S
3
SCALE Â MATRIX
k=1, K4
(K4=4:PIEZOELECTRIC)
(K4=3:0-PIEZOELECTRIC)
HEXAGNL
(.TRUE.)
(.FALSE.)
SOLVE FOR β_i' (i=1, 3)
USING 1st 3 ROWS OF
A MATRIX
SET $\beta_4'^k$=1.
SOLVE FOR $\beta_i'^k$(i=2, 4)
USING LAST 3 ROWS OF
Â MATRIX
SET $\beta_1'^k$=1.
SET $\beta_i^k=\beta_i'^k \cdot 10^{-10}$
(i=1, 4)
2.1
3

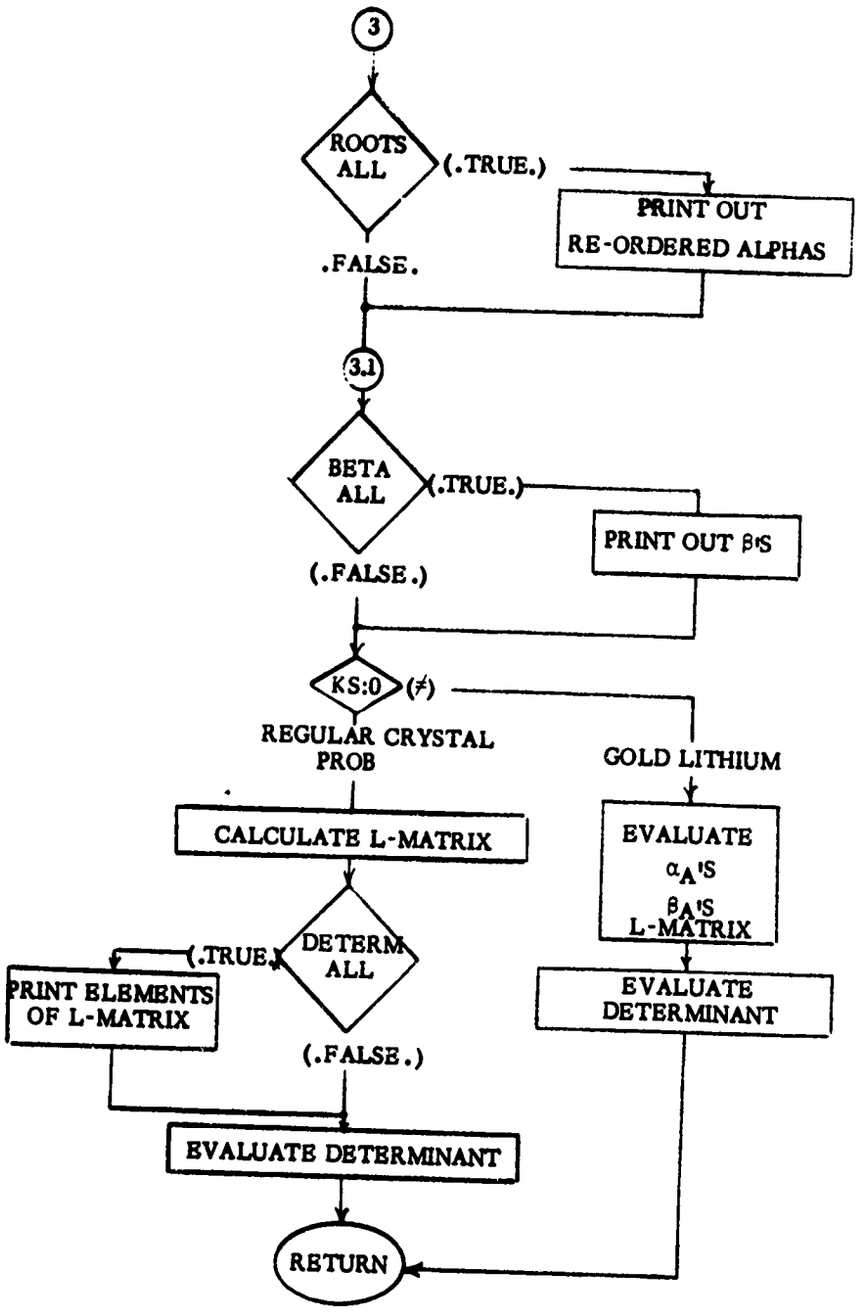
3
ROOTS ALL
(.TRUE.)
PRINT OUT RE-ORDERED ALPHAS
.FALSE.
3.1
BETA ALL
(.TRUE.)
PRINT OUT β'S
(.FALSE.)
KS:0
(≠)
REGULAR CRYSTAL PROB
GOLD LITHIUM
CALCULATE L-MATRIX
EVALUATE αA'S βA'S L-MATRIX
DETERM ALL
(.TRUE.)
PRINT ELEMENTS OF L-MATRIX
EVALUATE DETERMINANT
(.FALSE.)
EVALUATE DETERMINANT
RETURN

2. Surface Waves at the Boundary Between a Fluid Medium and Piezoelectric Crystal – Program Description

The purpose of this program is to determine the complex velocity of propagation of surface waves at the interface between a semi-infinite fluid and a piezoelectric substrate. Input parameters which define the fluid, the piezoelectric medium, and control the use of the program are described on the following pages.

The program is set up to run on the IBM 7094, using FORTRAN IV and Namelist input and the deck set up is identical with that given for the preceding program.

As in the proceding program, two input sections are required: the first describes the material constants of the piezoelectric crystal and the second describes the orientation of the crystal as well as other information pertinent to the execution of the program. The first data set is called CONST and is identical with that presented in Section IV.1. The following is a definition of each input parameter in the "INPUT" data set. Medium A refers to the dielectric (elastic) layer and medium B, to the piezoelectric substrate.

Input Name	Equation Name	Type	Definition
LAMDAB	λ_B	real	Euler angles for Medium B.
MUB	μ_B	real	
NUB	ν_B	real	
DNU	$\Delta\nu$	real	If the user wishes to vary ν (NUB) from some initial value, ν, to some final value, ν_{max}, in steps of $\Delta\nu$, then set DNU equal to the steps desired; also, see NUMAX. (See VSINC)
NUMAX	ν_{max}	real	The maximum value of ν (see DNU). ν_{max} is only used when DNU $\neq 0$.
VS	v_s	real	Initial estimate of velocity. This initial value will be used to find a final velocity, $\bar{v}_s$, such that $\lvert f(\bar{v}_s)\rvert < \epsilon$, where ϵ is input.
DVS	Δv_s	real	If the user does not care to use the root-finding scheme in determining a final value for v_s, but wishes, instead, to evaluate the determinant $\lvert f(v_s)\rvert$ for particular values of v_s in the range from v_s to $v_{s_{max}}$ in steps of Δv_s, then set DVS equal to the step size desired. (For use when MAX = 0.)
VSMAX	$v_{s_{max}}$	real	Maximum value of v_s to be used when DVS $\neq 0$.
LAMDAA	λ_A	real	Lame constants for Medium A.
MUA	μ_A	real	
RHOA	ρ_A	real	Mass density of Medium A.
RHOB	ρ_B	real	Mass density of Medium B.
EPSLON	ϵ	real	A positive number used as a convergence criterion by the root-finding scheme (MAX > 0). If $\lvert f(v_s)\rvert < \epsilon$, then v_s is assumed to be the root required.
EPSO	ϵ_o	real	Permittivity of free space.

Input Name	Equation Name	Type	Definition
EPSA	ϵ_A	real	Dielectric constant for Medium A.
WH	ωh	real	Frequency thickness product.
WXA	ωx_A	real	Normalized distance into Medium A.
DWXA	$\Delta\omega x_A$	real	In order to vary ωx_A (WXA) from an initial value, ωx_A, to a final value $\omega x_{A_{max}}$, DWXA must be set equal to the desired step size. See WXAMAX.
WXAMAX	$\omega x_{A_{max}}$	real	The maximum value of ωx_A to be used when DWXA $\neq 0$.
WXB	ωx_B	real	Normalized distance into Medium B.
DWXB	$\Delta\omega x_B$	real	In order to vary ωx_B from an initial value, ωx_B, to a final value, $\omega x_{B_{max}}$, DWXB must be set equal to the step size desired. See WXBMAX.
WXBMAX	$\omega x_{B_{max}}$	real	The maximum value of ωx_B to be used when DWXB $\neq 0$.
ICHECK	----	logical	ICHECK = .TRUE. – All FINAL ANSWERS* are computed in addition to the evaluation of the determinant $\lvert f(\bar{v}_s)\rvert$. ICHECK = .FALSE. – FINAL ANSWERS are <u>not</u> computed; evaluate determinant only.
MAX	----	integer	Since an iteration scheme is used for convergence for a final root v_s, there must be an indication of how many iterations are to be executed before divergence is assumed. Hence, MAX should be the maximum number of iterations the user wishes the program to make (usually 15). If MAX is set to zero (MAX = 0) the determinant $\lvert f(\bar{v}_s)\rvert$ will be evaluated for the particular v_s value input – the iteration scheme will not be used. This option may be useful if there is difficulty in determining the range in which v_s lies.

*The FINAL RESULTS, which are computed for all values of WXA (dielectric layer) and WXB (piezoelectric layer), include the following:

Stress Components
Strain Components
Time Average Power Flow
Electric Displacement
Mechanical Displacement
Electric Potential Magnitude
Electric Field

Input Name	Equation Name	Type	Definition
TITLE	----	BCD	An alphanumeric array of 24 characters or less used to describe the type of crystal, such as lithium niobate. This is input in the following manner: TITLE = nH name of crystal, where n is the number of characters following the H (including blanks). For example TITLE = 6HQUARTZ
HXAGNL	----	logical	Parameter which controls the calculation of betas (β's) for a hexagonal crystal (such as zinc oxide) .TRUE. hexagonal crystal (use special technique) .FALSE. non-hexagonal crystal (use normal procedure)
VSINC	----	logical	VSINC = .TRUE. – New estimates of initial velocity (v_s) are computed using a linear fit to the two previous values. (Used when NUB varies over a range NUB, NUB + DNU, ... , NUMAX) VSINC = .FALSE. – The same initial estimate of velocity is used for all values over the specified range of NUB.
IOP	----	integer	Degenerate case options (used when exactly four α's with positive real part occur). IOP = 1 – seek modes of propagation of the Quasi-Rayleigh or Sesawa type. IOP = 2 – seek modes of propagation of Love type.
REPEAT	----	logical	REPEAT is a logical variable and in its usage, can take only one value: .TRUE. If there are no more cases to run after the current case, REPEAT does not need to be input. If there will be another case to follow, but the crystal coefficients remain the same, then, again, REPEAT does not need to be input. However, if another case is to be run and the coefficients are different, then REPEAT needs to be input

Input Name	Equation Name	Type	Definition
			as .TRUE. This means that the $CONST data will have to be input again (in the other cases above, $CONST would not have to be input again).

The following input parameters are all logical variables which are assumed to be false (.FALSE.) in the program. They are used as switches indicating whether or not intermediate calculations are to be printed. If any one, or any combination of these parameters are input as true (.TRUE.), then certain intermediate data will print, according to the following:

TABCTE	Print the constants E, C, and T (the transformed piezoelectric, elastic, and dielectric constants) calculated from the constants P, G, and EPS.
ROOTS	Print the roots of the polynomial each time they are calculated.
BETA	Print the values of $\hat{\beta}_{ij}$.
DETERM	Print the value of the determinant.
COEFF	Print the coefficients of the 8'th order polynomial.
TABL	Print the L matrix (or $\hat{P}$, $\hat{Q}$, $\hat{R}$, etc., when used).
ALPHA	Print the roots of the polynomial (α_B^j's) and the re-ordered roots for degenerate cases.
ALL	Print all of the above.

Data items may be excluded from the input stream at the discretion of the user. Items omitted from the first data set will take on nominal values (i.e.: values assigned within the program). Items omitted from succeeding data sets will take on previously assigned values. The following is a complete list of nominal values:*

*All logical parameters have a nominal value of .FALSE.

Parameter	Nominal Value
LAMDAB	0.
MUB	0.
NUB	0.
DNU	0.
NUMAX	0.
VS	3000.
DVS	0.
VSMAX	0.
LAMDAA	1.5×10^{11}
MUA	2.85×10^{10}
RHOA	1.888×10^{4}
RHOB	4700.
EPSLON	$1. \times 10^{-11}$
EPSO	8.85×10^{-12}
EPSA	44.25×10^{-12}
WH	0.
WXA	0.
DWXA	0.
WXAMAX	0.
WXB	0.
DWXB	0.
WXBMAX	0.
MAX	15.
TITLE	LITHIUM NIOBATE
IOP	1

The computer program flow described below shares a good many features of the program described in Section IV.1. As in the preceding programs the nominal data values are set up first. Next the piezoelectric (P), elastic (G), and dielectric (EPS) constants are read in (CONST DATA). Following this the rest of the input data is entered (INPUT DATA).

At this point subroutine SETCTE is called to compute the transformed piezoelectric (CE), elastic (CC), and dielectric (CT) constants. Next subroutine ROOT is called. ROOT performs the calculations and calls the subroutines necessary to perform the following tasks:

(a) Compute F(VS), the boundary condition determinant,

(b) implement a complex root finding scheme to minimize $|F(VS)|$ as a function of complex velocity (VS),

(c) perform the perturbation analysis.

ROOT calls subroutine F to perform the manipulations necessary to compute the boundary condition determinant. F will be discussed in some detail below.

After exiting from ROOT and returning to the main program the trial velocity (VS) can be incremented if it is desired only to compute F(VS) at specified velocities rather than implement the root finding scheme or the perturbation scheme. When this has been completed the third Euler angle (NU) can be incremented and all of the steps, from the point where SETCTE is called to calculate the transformed piezoelectric, elastic, and dielectric constants, are repeated for each value of NU.

Following this the program returns to read in new data in either of the following fashions:

(a) If the crystal is to remain the same but the orientation of the crystal face is changed (new Euler angles) the new data comes from INPUT DATA.

(b) If the crystal itself is changed as well as the Euler angles the data comes from CONST DATA and INPUT DATA in that order.

When all the data has been exhausted the program stops.

Subroutine F

Upon entering subroutine F a check is made to determine whether the perturbation scheme is to be used. If it is not to be used, VS is set equal to VSO (the input value). If the perturbation scheme is to be used a loop is begun which will allow the numerical derivatives of the various determinants to be taken by setting VS = VSO + DEL, VS = VSO - DEL and VS = VSO, in that order. For each of these velocities the necessary determinants needed to evaluate Δv_s (the perturbed velocity) are computed. The convergence of the numerical derivatives is checked by noting the differences in the computed determinants and Δv_s as DEL is allowed to take on subsequently smaller values.

The loop is begun by setting counters INIT and IDX both equal to 1. DEL = EPS(INIT) · VSO is calculated and VS is set equal to VSO + DEL. EPS(INIT) is a small number depending upon the value of INIT. Three values EPS(1), EPS(2), and EPS(3) will be used eventually as a convergence test on the numerical derivatives. The program now proceeds to set up the M, N, and P matrices as a function of VS (the P matrix is the cofactor of M_{46} and its determinant has been referred to as K in the analysis section, K = det(P)).

When the determinant of the P matrix (DP(IDX)) has been evaluated for the first time (IDX = 1) a logical check notes that IDX ≠ 3 and proceeds to evaluate the determinant of the N matrix (DN(IDX)). At this point another logical check notes that IDX = 1 and proceeds to set VS = VSO - DEL and IDX = 2. The program then returns to set up the new M, N, and P matrixes and evaluate DP(IDX) = DP(2). The logical check following the evaluation of DP(IDX) again notes that IDX ≠ 3 and therefore evaluates DN(IDX) = DN(2). The logical check following evaluation of DN(IDX) now notes that IDX ≠ 1 as it was before. The program therefore proceeds to calculate the numerical derivatives ((det N)′ and (det P)′) by the approximate formulas

$$\underbrace{DNP(INIT)}_{(\det N)'} = \frac{DN(1)-DN(2)}{2 \cdot DEL} \quad \text{and} \quad \underbrace{DPP(INIT)}_{(\det P)'} = \frac{DP(1)-DP(2)}{2 \cdot DEL} .$$

Next a new logical check notes that INIT ≠ 3 (it is still 1) and returns to the point where INIT and IDX were originally initialized. It now increments INIT by one (i.e. INIT = 2 now) and resets IDX = 1. DEL = EPS(2) · VSO and VS = VSO + DEL are evaluated and all the steps from this point are repeated until finally the numerical derivatives are again taken with the new value of DEL.

Again the logical check at this point notes INIT $\neq$ 3 (INIT = 2) and again the point of initialization of INIT and IDX is entered. INIT is again incremented by one (INIT = 3 now) and IDX is reset to 1. DEL = EPS(3) · VSO and VS = VSO + DEL are evaluated again and the subsequent steps again taken until the numerical derivatives are taken again at this third value of DEL. The logical check following the evaluation of the numerical derivatives now notes that INIT = 3 and thus sets IDX = 3 and returns to the point where VS was first set equal to VSO. The perturbation loop has been bypassed and VS = VSO is now used to evaluate M, N, P matrix elements. When the determinant of the P matrix (DP(IDX)) has been evaluated the subsequent logical check notes that IDX = 3 and all the quantities needed have been evaluated. It therefore proceeds to print out the results. After this the main program is re-entered to look for new cases.

The steps for any particular velocity (VS) taken to evaluate the elements of the M, N, or P matrices will now be discussed. First quantities $VSQ = (VS)^2$ and $\left\{\begin{array}{l} RVS = RHOB \cdot VSQ \\ RVSQ = RHOL \cdot VSQ \end{array}\right\}$ are set up. RHOL is the mass density of the liquid while RHOB is the mass density of the crystal. Next subroutine STRIP is called to compute the coefficients of the eighth order polynomial in α just as was done in the first program. Subroutine CROOT is now called to calculate the roots (α) of the polynomial. If a non-piezoelectric case is being considered the two extraneous roots are eliminated as in the first program. The roots with positive real part are now selected (ALFAB(I) I=1, K). If K $\leq$ 1 the case terminates. If K = 2 or 3 checks are made of various elements of the matrix of coefficients ($\hat{A}$) of the relative field amplitudes ($\beta_i^{(\ell)}$). $\hat{A}_{12}$ and $\hat{A}_{23}$ are tested to see if they are identically zero. If they are not both identically zero a degenerate case cannot exist. If the crystal is piezoelectric, then, there are insufficient α's and the case terminates. If the crystal is non-piezoelectric and K = 2 the case terminates also (insufficient α's). If the crystal is non-piezoelectric and K = 3 the appropriate β's are calculated as indicated in the analysis of the first problem. If, however, $\hat{A}_{12}$ and $\hat{A}_{23}$ are both identically zero and a non-piezoelectric case is being considered, it is a degenerate case and is so treated. If the crystal is piezoelectric a check of $\hat{A}_{24}$ is made. If $\hat{A}_{24}$ is zero and K = 2 the program terminates but if K = 3 the first degenerate case of the analysis section of the first problem has arisen (β_1, β_3, $\beta_4 \neq 0$, $\beta_2 = 0$) and is treated appropriately.

If $\hat{A}_{24}$ is not identically zero a check of $\hat{A}_{14}$ and $\hat{A}_{34}$ is made. If they are not both equal to zero the case terminates since no degenerate case has arisen. If both are identically zero the second degenerate case of the analysis section of the first problem has arisen and is treated accordingly.

If K = 4 and a piezoelectric case is being considered or K = 3 and a non-piezoelectric case is being considered the β's are derived in the fashion indicated in the first program. After the β's have been computed the quantity $ARAD = 1 - \frac{RVSQ}{LAMDAL}$ is computed where LAMDAL (λ_ℓ) is the modulus of compression of the fluid. If no perturbation scheme is to be used the program computes $ALFAL = \sqrt{ARAD}$ and tests to see if the imaginary part of ALFAL (Im (ALFAL)) is equal to zero. If Im (ALFAL) = 0 the negative square root is taken; otherwise the root is taken so that Im (ALFAL) < 0 (this was necessary in order that a velocity with positive imaginary part result as a solution). The elements of the M matrix are set up next and the determinant evaluated (det (M) = F(VS)). If the perturbation scheme is to be used the various matrices indicated are set up as indicated earlier and the velocity perturbation Δv_s is calculated.

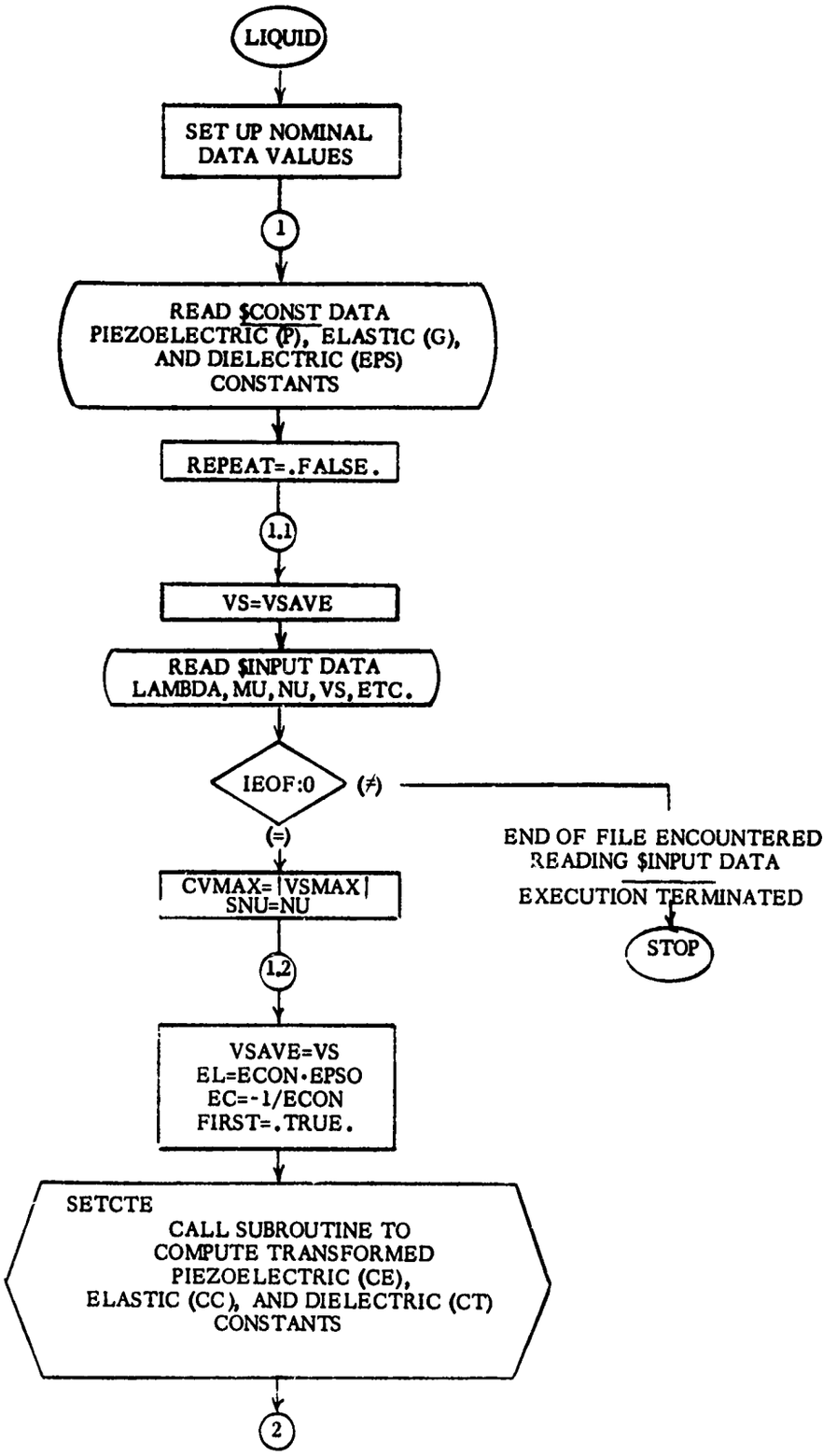
LIQUID
SET UP NOMINAL DATA VALUES
1
READ $CONST DATA PIEZOELECTRIC (P), ELASTIC (G), AND DIELECTRIC (EPS) CONSTANTS
REPEAT=.FALSE.
1.1
VS=VSAVE
READ $INPUT DATA LAMBDA, MU, NU, VS, ETC.
IEOF:0
(≠)
END OF FILE ENCOUNTERED READING $INPUT DATA
EXECUTION TERMINATED
STOP
(=)
CVMAX=|VSMAX|
SNU=NU
1.2
VSAVE=VS
EL=ECON·EPSO
EC=-1/ECON
FIRST=.TRUE.
SETCTE
CALL SUBROUTINE TO COMPUTE TRANSFORMED PIEZOELECTRIC (CE), ELASTIC (CC), AND DIELECTRIC (CT) CONSTANTS
2

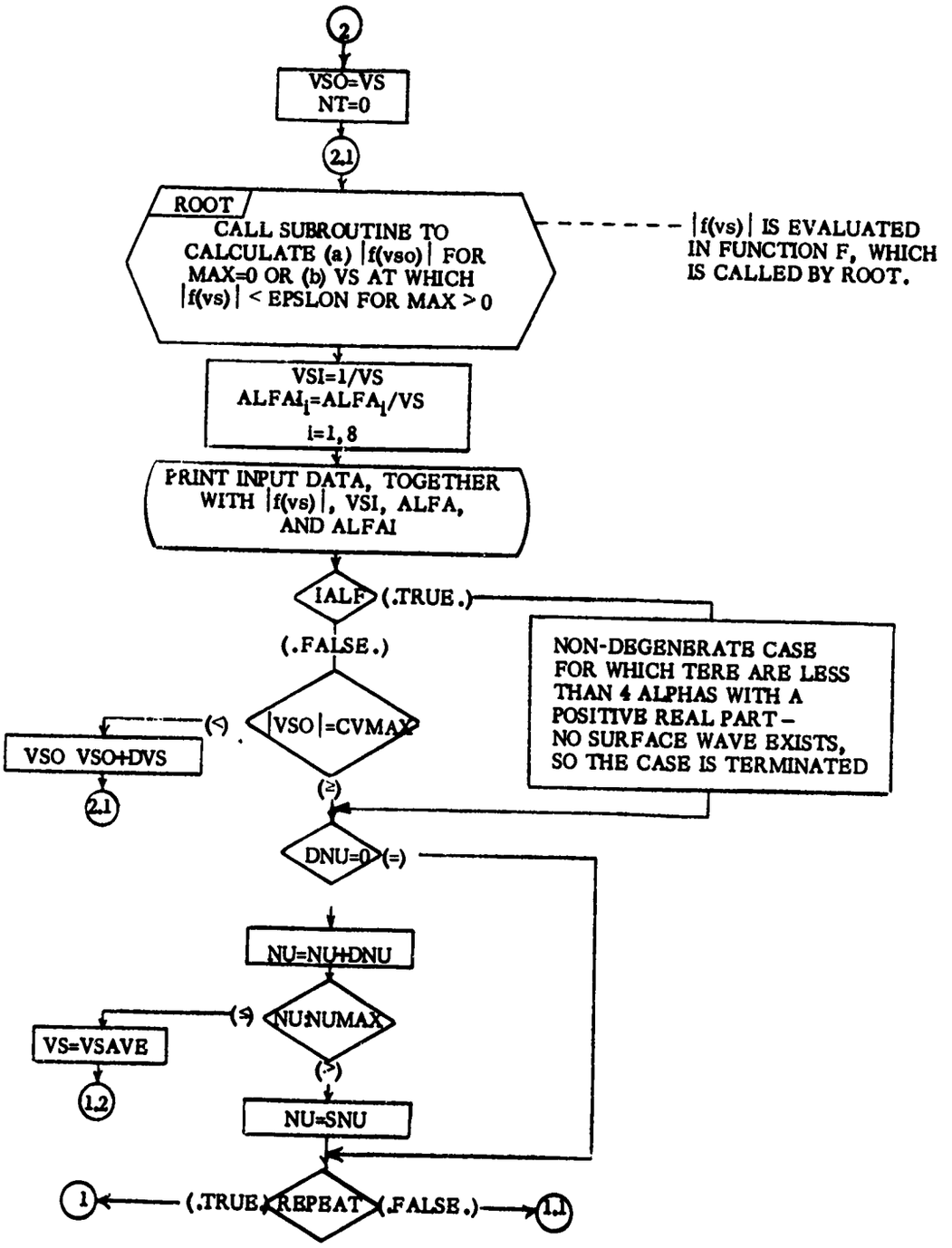
2
VSO=VS
NT=0
2.1
ROOT
CALL SUBROUTINE TO CALCULATE (a) |f(vso)| FOR MAX=0 OR (b) VS AT WHICH |f(vs)| < EPSLON FOR MAX > 0
|f(vs)| IS EVALUATED IN FUNCTION F, WHICH IS CALLED BY ROOT.
VSI=1/VS
ALFAI$_i$=ALFA$_i$/VS
i=1, 8
PRINT INPUT DATA, TOGETHER WITH |f(vs)|, VSI, ALFA, AND ALFAI
IALF
(.TRUE.)
(.FALSE.)
NON-DEGENERATE CASE FOR WHICH TERE ARE LESS THAN 4 ALPHAS WITH A POSITIVE REAL PART – NO SURFACE WAVE EXISTS, SO THE CASE IS TERMINATED
|VSO|=CVMAX
(<)
VSO VSO+DVS
2.1
(≥)
DNU=0
(=)
NU=NU+DNU
NU:NUMAX
(<)
VS=VSAVE
1.2
(>)
NU=SNU
1
(.TRUE.)
REPEAT
(.FALSE.)
1.1

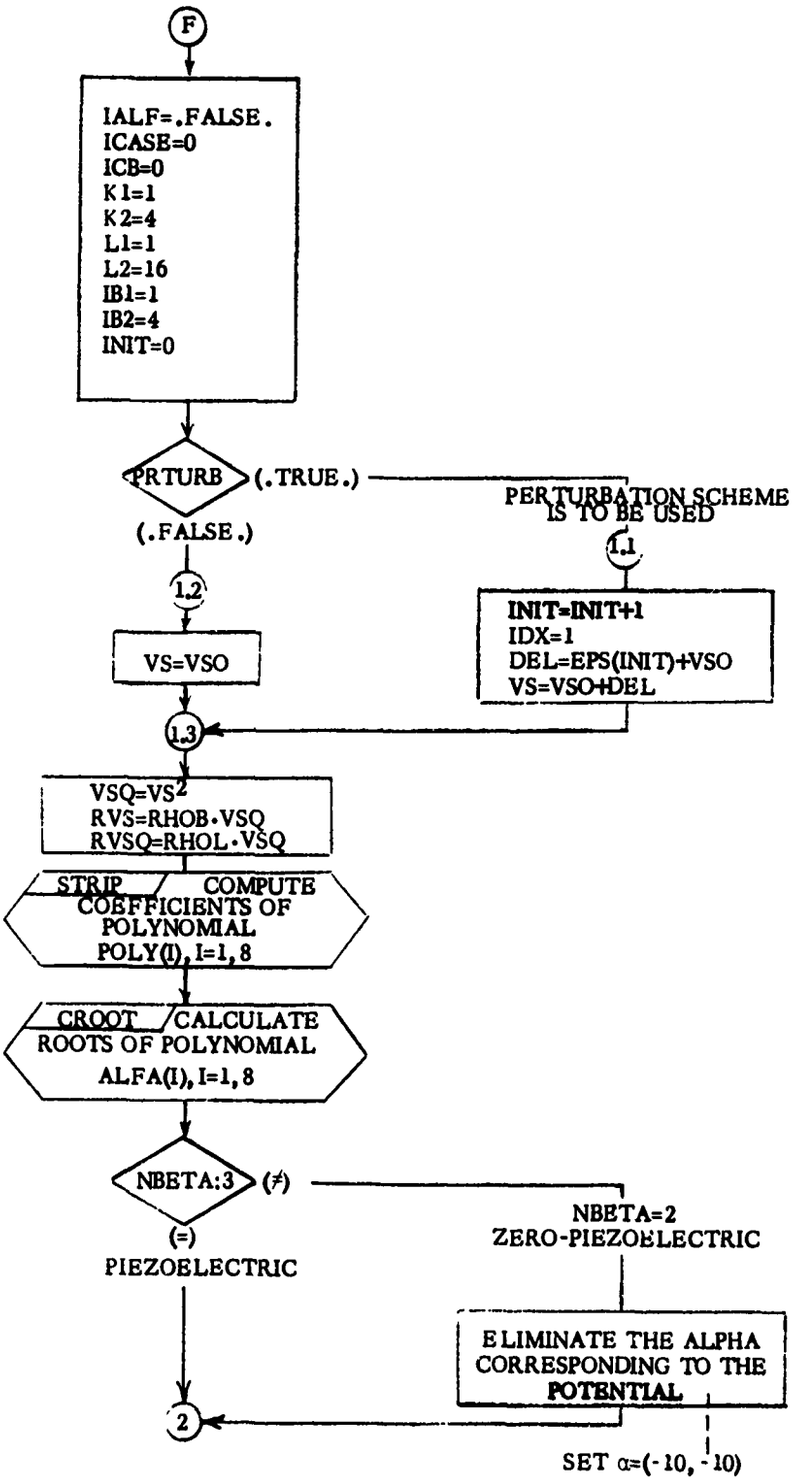
F
IALF=.FALSE.
ICASE=0
ICB=0
K1=1
K2=4
L1=1
L2=16
IB1=1
IB2=4
INIT=0
PRTURB
(.TRUE.)
PERTURBATION SCHEME IS TO BE USED
1.1
INIT=INIT+1
IDX=1
DEL=EPS(INIT)+VSO
VS=VSO+DEL
(.FALSE.)
1.2
VS=VSO
1.3
VSQ=VS2
RVS=RHOB·VSQ
RVSQ=RHOL·VSQ
STRIP
COMPUTE COEFFICIENTS OF POLYNOMIAL POLY(I), I=1, 8
CROOT
CALCULATE ROOTS OF POLYNOMIAL ALFA(I), I=1, 8
NBETA:3
(≠)
NBETA=2
ZERO-PIEZOELECTRIC
(=)
PIEZOELECTRIC
ELIMINATE THE ALPHA CORRESPONDING TO THE POTENTIAL
2
SET α=(-10, -10)

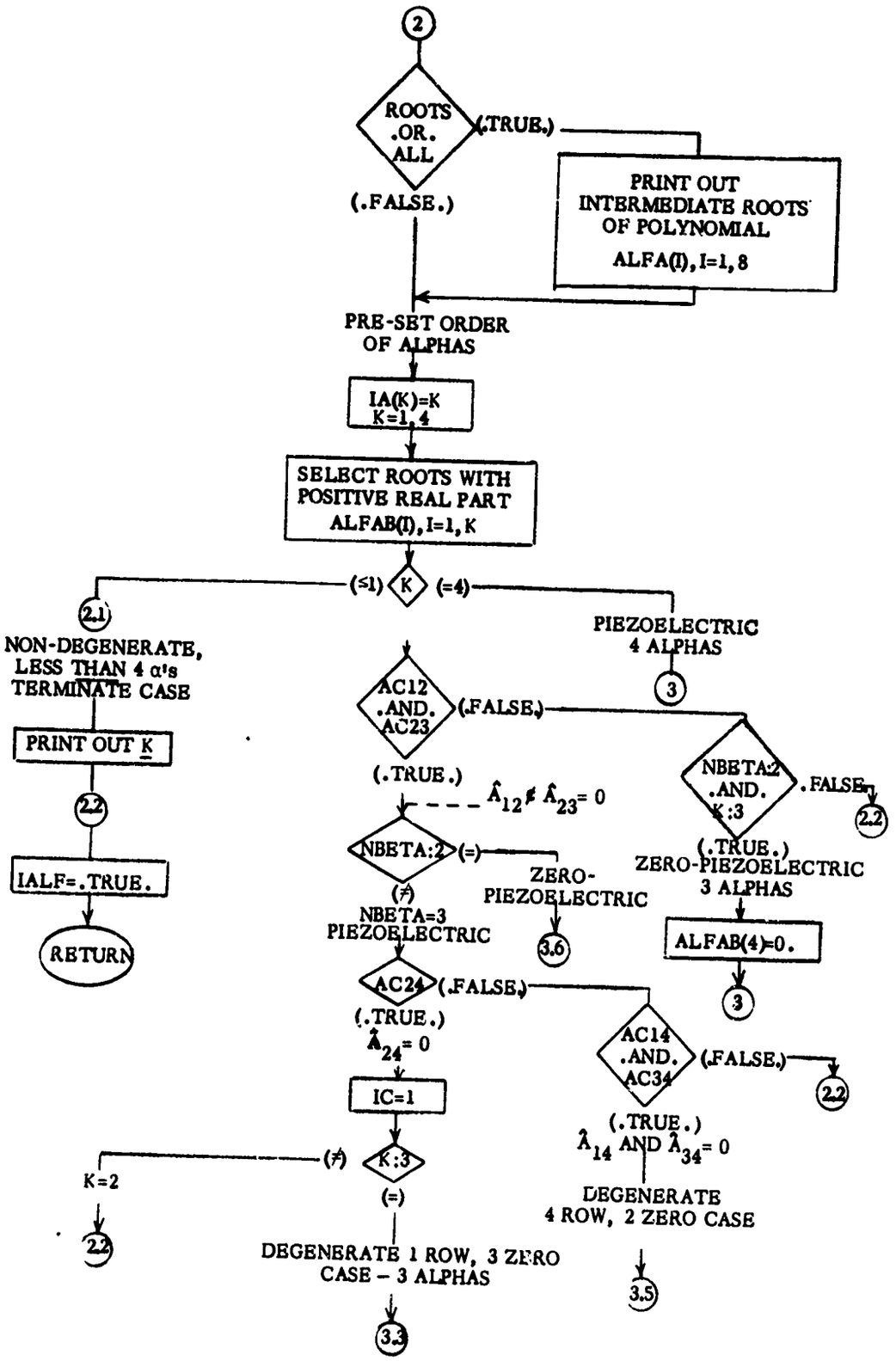
2
ROOTS .OR. ALL
(.TRUE.)
PRINT OUT INTERMEDIATE ROOTS OF POLYNOMIAL
ALFA(I), I=1, 8
(.FALSE.)
PRE-SET ORDER OF ALPHAS
IA(K)=K
K=1, 4
SELECT ROOTS WITH POSITIVE REAL PART
ALFAB(I), I=1, K
(≤1)
K
(=4)
2.1
NON-DEGENERATE, LESS THAN 4 α's TERMINATE CASE
PRINT OUT K
2.2
IALF=.TRUE.
RETURN
PIEZOELECTRIC 4 ALPHAS
3
AC12 .AND. AC23
(.FALSE.)
(.TRUE.)
$\hat{A}_{12} \neq \hat{A}_{23} = 0$
NBETA:2
(=)
ZERO-PIEZOELECTRIC
3.6
(≠)
NBETA=3 PIEZOELECTRIC
AC24
(.FALSE.)
(.TRUE.)
$\hat{A}_{24} = 0$
IC=1
K:3
(≠)
K=2
2.2
(=)
DEGENERATE 1 ROW, 3 ZERO CASE – 3 ALPHAS
3.3
NBETA:2 .AND. K:3
.FALSE.
2.2
(.TRUE.)
ZERO-PIEZOELECTRIC 3 ALPHAS
ALFAB(4)=0.
3
AC14 .AND. AC34
(.FALSE.)
2.2
(.TRUE.)
$\hat{A}_{14}$ AND $\hat{A}_{34} = 0$
DEGENERATE 4 ROW, 2 ZERO CASE
3.5

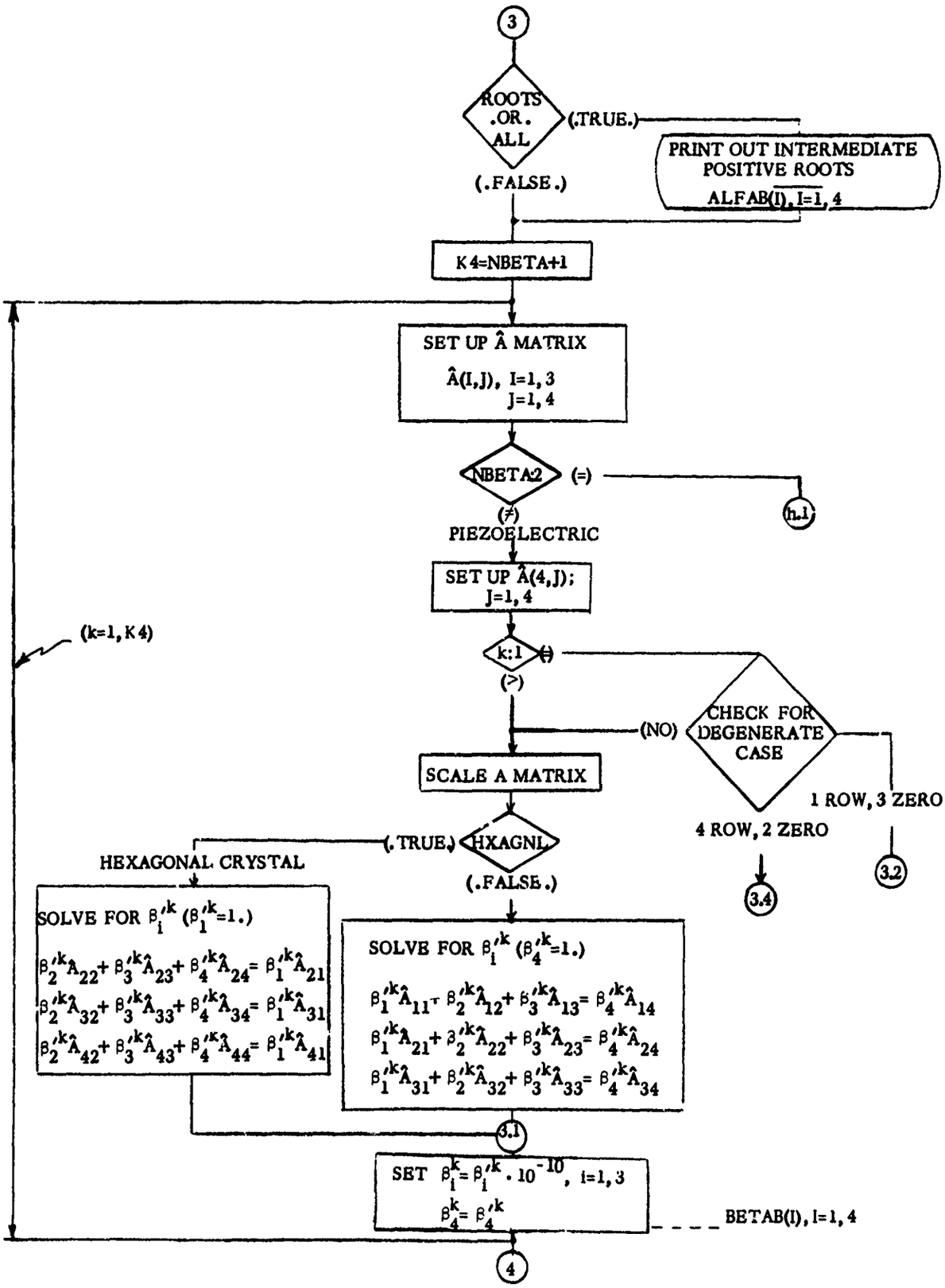
3
ROOTS .OR. ALL
(.TRUE.)
PRINT OUT INTERMEDIATE POSITIVE ROOTS
ALFAB(I), I=1, 4
(.FALSE.)
K4=NBETA+1
SET UP Â MATRIX
Â(I,J), I=1, 3
J=1, 4
NBETA2
(=)
h.1
(≠)
PIEZOELECTRIC
SET UP Â(4,J);
J=1, 4
(k=1, K4)
k:1
(=)
(>)
CHECK FOR DEGENERATE CASE
(NO)
1 ROW, 3 ZERO
4 ROW, 2 ZERO
3.2
3.4
SCALE A MATRIX
HXAGNL
(.TRUE.)
HEXAGONAL CRYSTAL
(.FALSE.)
SOLVE FOR $\beta_i'^k$ ($\beta_1'^k$=1.)
$\beta_2'^k\hat{A}_{22}+\beta_3'^k\hat{A}_{23}+\beta_4'^k\hat{A}_{24}=\beta_1'^k\hat{A}_{21}$
$\beta_2'^k\hat{A}_{32}+\beta_3'^k\hat{A}_{33}+\beta_4'^k\hat{A}_{34}=\beta_1'^k\hat{A}_{31}$
$\beta_2'^k\hat{A}_{42}+\beta_3'^k\hat{A}_{43}+\beta_4'^k\hat{A}_{44}=\beta_1'^k\hat{A}_{41}$
SOLVE FOR $\beta_i'^k$ ($\beta_4'^k$=1.)
$\beta_1'^k\hat{A}_{11}+\beta_2'^k\hat{A}_{12}+\beta_3'^k\hat{A}_{13}=\beta_4'^k\hat{A}_{14}$
$\beta_1'^k\hat{A}_{21}+\beta_2'^k\hat{A}_{22}+\beta_3'^k\hat{A}_{23}=\beta_4'^k\hat{A}_{24}$
$\beta_1'^k\hat{A}_{31}+\beta_2'^k\hat{A}_{32}+\beta_3'^k\hat{A}_{33}=\beta_4'^k\hat{A}_{34}$
3.1
SET $\beta_i^k=\beta_i'^k\cdot 10^{-10}$, i=1, 3
$\beta_4^k=\beta_4'^k$
BETAB(I), I=1, 4
4

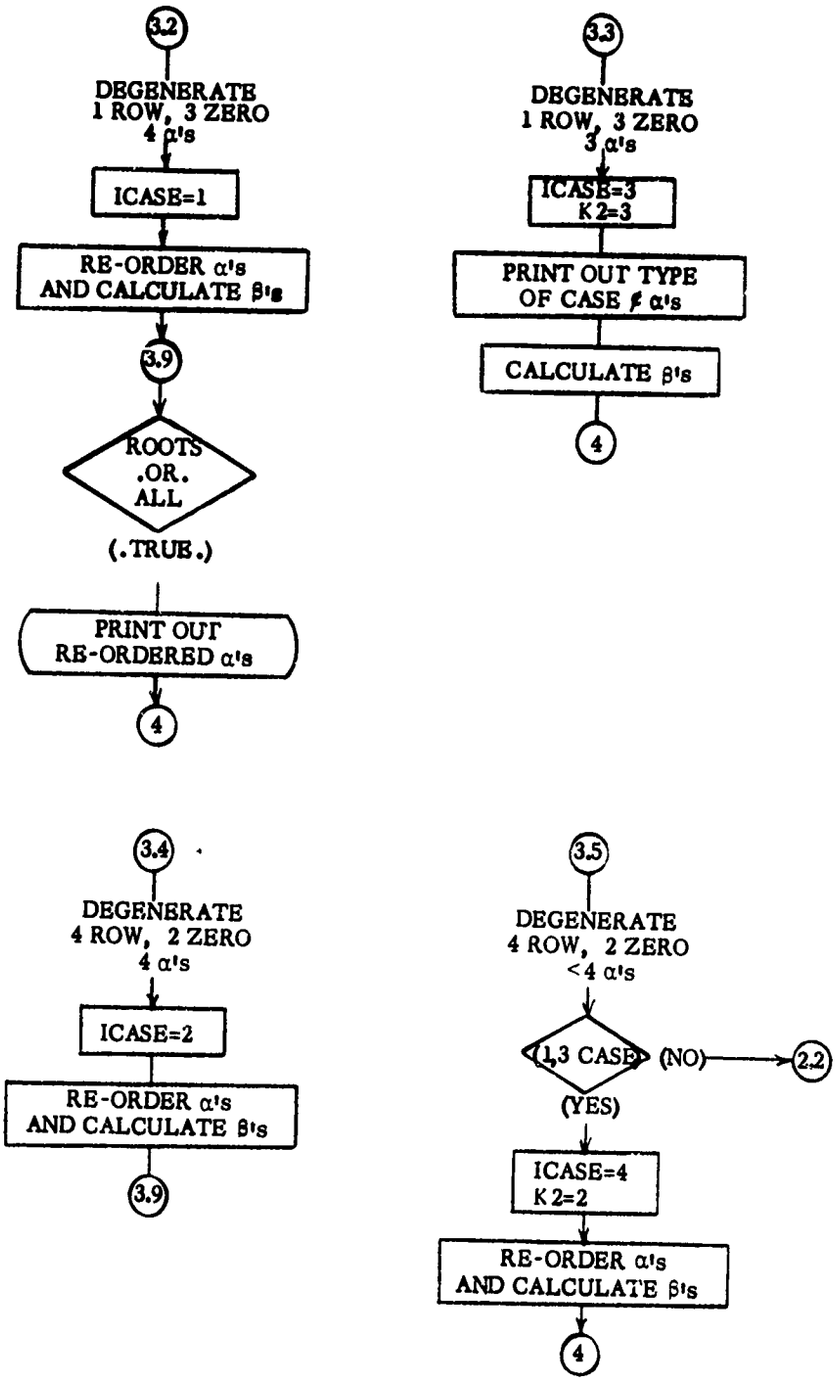
3.2
DEGENERATE
1 ROW, 3 ZERO
4 α's
ICASE=1
RE-ORDER α's
AND CALCULATE β's
3.9
ROOTS
.OR.
ALL
(.TRUE.)
PRINT OUT
RE-ORDERED α's
4
3.3
DEGENERATE
1 ROW, 3 ZERO
3 α's
ICASE=3
K2=3
PRINT OUT TYPE
OF CASE & α's
CALCULATE β's
4
3.4
DEGENERATE
4 ROW, 2 ZERO
4 α's
ICASE=2
RE-ORDER α's
AND CALCULATE β's
3.9
3.5
DEGENERATE
4 ROW, 2 ZERO
<4 α's
1,3 CASE
(NO)
2.2
(YES)
ICASE=4
K2=2
RE-ORDER α's
AND CALCULATE β's
4

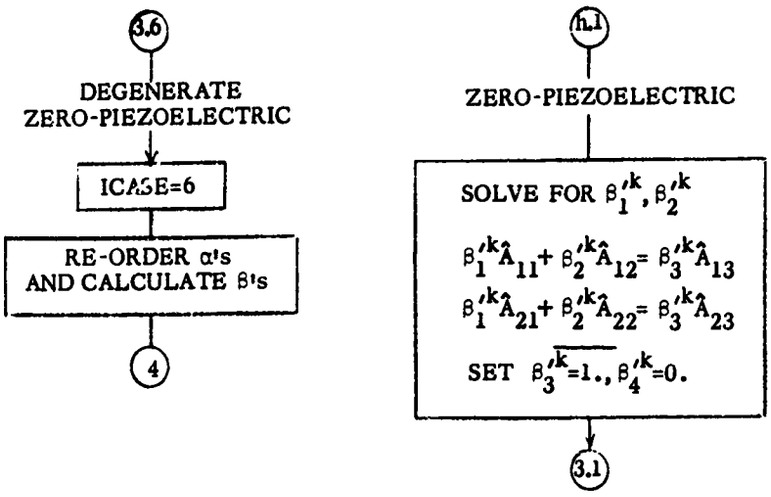
3.6
DEGENERATE
ZERO-PIEZOELECTRIC
ICASE=6
RE-ORDER α's
AND CALCULATE β's
4
h.1
ZERO-PIEZOELECTRIC
SOLVE FOR $\beta_1'^k, \beta_2'^k$
$\beta_1'^k\hat{A}_{11} + \beta_2'^k\hat{A}_{12} = \beta_3'^k\hat{A}_{13}$
$\beta_1'^k\hat{A}_{21} + \beta_2'^k\hat{A}_{22} = \beta_3'^k\hat{A}_{23}$
SET $\beta_3'^k = 1., \beta_4'^k = 0.$
3.1

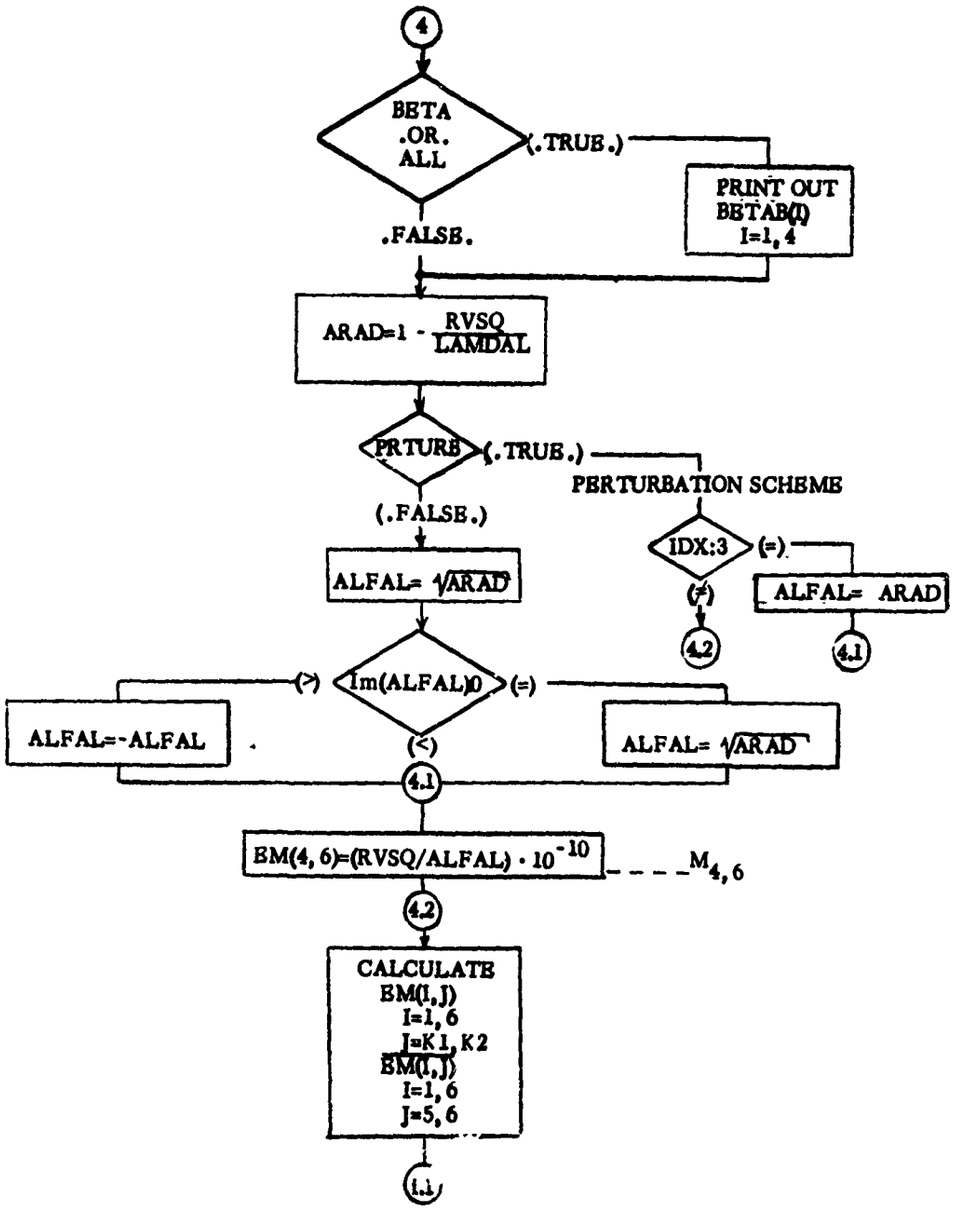
4
BETA .OR. ALL
(.TRUE.)
PRINT OUT BETAB(I) I=1, 4
.FALSE.
ARAD=1 - RVSQ/LAMDAL
PRTURB
(.TRUE.)
PERTURBATION SCHEME
(.FALSE.)
IDX:3
(=)
(≠)
ALFAL= ARAD
4.2
4.1
ALFAL= √ARAD
Im(ALFAL)0
(>)
(=)
(<)
ALFAL=-ALFAL
ALFAL= √ARAD
4.1
EM(4, 6)=(RVSQ/ALFAL) · 10^-10
M4, 6
4.2
CALCULATE EM(I, J) I=1, 6 J=K1, K2
EM(I, J) I=1, 6 J=5, 6
1.1

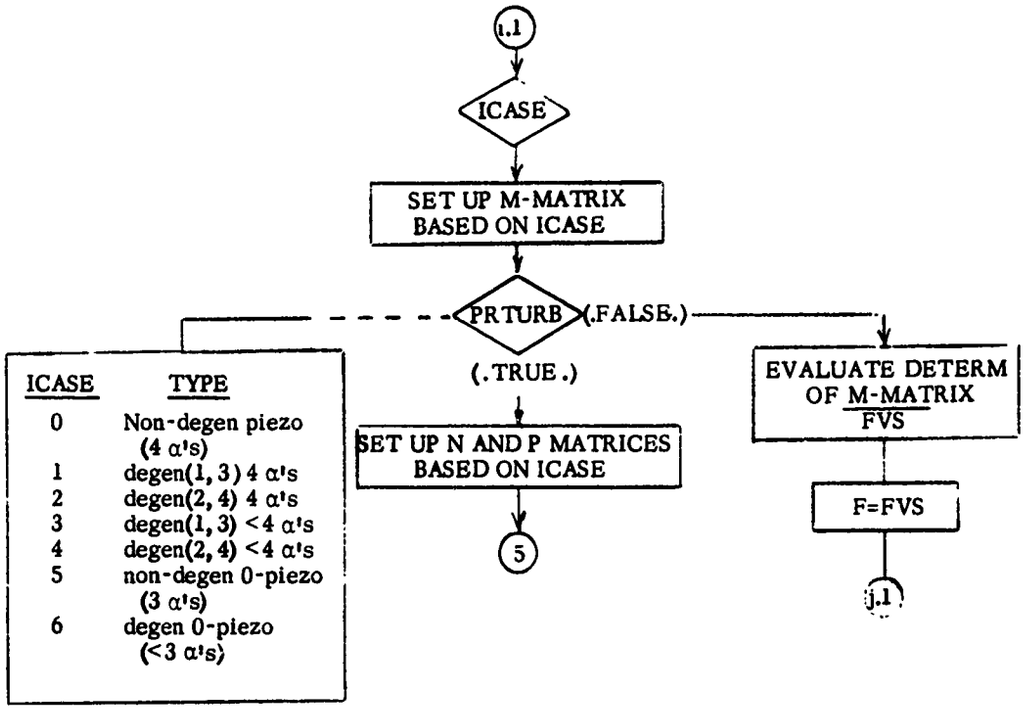
i.1
ICASE
SET UP M-MATRIX BASED ON ICASE
PRTURB
(.FALSE.)
(.TRUE.)
SET UP N AND P MATRICES BASED ON ICASE
5
EVALUATE DETERM OF M-MATRIX / FVS
F=FVS
j.1
ICASE TYPE
0 Non-degen piezo (4 α's)
1 degen(1, 3) 4 α's
2 degen(2, 4) 4 α's
3 degen(1, 3) <4 α's
4 degen(2, 4) <4 α's
5 non-degen 0-piezo (3 α's)
6 degen 0-piezo (<3 α's)

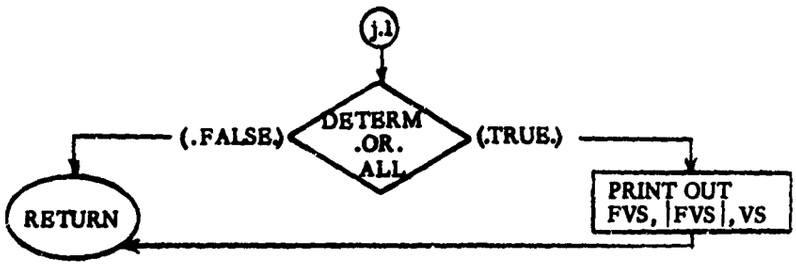
j.1
DETERM
.OR.
ALL
(.FALSE.)
(.TRUE.)
RETURN
PRINT OUT
FVS, |FVS|, VS

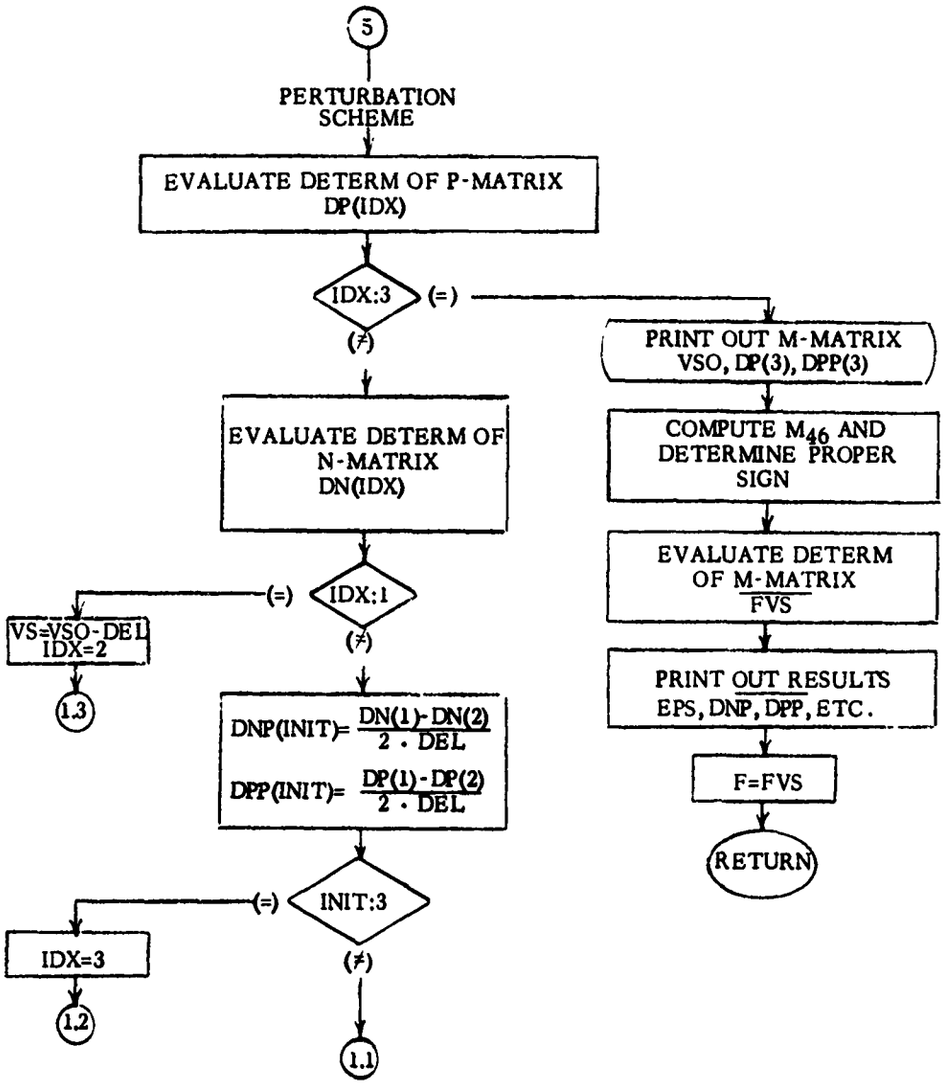
5
PERTURBATION SCHEME
EVALUATE DETERM OF P-MATRIX DP(IDX)
IDX:3
(=)
(≠)
PRINT OUT M-MATRIX VSO, DP(3), DPP(3)
EVALUATE DETERM OF N-MATRIX DN(IDX)
COMPUTE M_{46} AND DETERMINE PROPER SIGN
EVALUATE DETERM OF M-MATRIX FVS
IDX:1
(=)
(≠)
VS=VSO-DEL IDX=2
1.3
PRINT OUT RESULTS EPS, DNP, DPP, ETC.
DNP(INIT)= DN(1)-DN(2) / 2 · DEL
DPP(INIT)= DP(1)-DP(2) / 2 · DEL
F=FVS
RETURN
INIT:3
(=)
(≠)
IDX=3
1.2
1.1

3. Isotropic, Elastic, Dielectric Layer on Piezoelectric Substrate – Program Description

The purpose of this program is to determine the complex velocity of propagation of surface waves at the interface between a semi-infinite fluid and a piezoelectric substrate. The necessary input and control parameters are described on the following pages.

As with the proceeding program, this program is set up to run on the IBM 7094, using FORTRAN IV and Namelist input and the deck set up is again identical with that described in Section IV.1. Again, two input sections are required: the first describes the material constants of the piezoelectric crystal and the second describes the orientation of the crystal as well as other information pertinent to the execution of the program. The first data set is called CONST and is identical with that described in Section IV.1. The second data set is called "INPUT," and the following is a definition of each input parameter. Medium A refers to the dielectric (elastic) layer and medium B, to the piezoelectric substrate.

Input Name	Equation Name	Type	Definition
LAMDAB	λ_B	real	Euler angles for Medium B.
MUB	μ_B	real	
NUB	ν_B	real	
DNU	$\Delta\nu$	real	If the user wishes to vary ν (NUB) from some initial value, ν, to some final value, ν_{max}, in steps of $\Delta\nu$, then set DNU equal to the steps desired; also, see NUMAX. (See VSINC)
NUMAX	ν_{max}	real	The maximum value of ν (see DNU). ν_{max} is only used when DNU $\neq 0$.
VS	v_s	real	Initial estimate of velocity. This initial value will be used to find a final velocity, $\bar{v}_s$, such that $\lvert f(\bar{v}_s)\rvert < \epsilon$, where ϵ is input.
DVS	Δv_s	real	If the user does not care to use the root-finding scheme in determining a final value for v_s, but wishes, instead, to evaluate the determinant $\lvert f(v_s)\rvert$ for particular values of v_s in the range from v_s to $v_{s_{max}}$ in steps of Δv_s, then set DVS equal to the step size desired. (For use when MAX = 0.)
VSMAX	$v_{s_{max}}$	real	Maximum value of v_s to be used when DVS $\neq 0$.
LAMDAA	λ_A	real	Lame constants for Medium A.
MUA	μ_A	real	
RHOA	ρ_A	real	Mass density of Medium A.
RHOB	ρ_B	real	Mass density of Medium B.
EPSLON	ϵ	real	A positive number used as a convergence criterion by the root-finding scheme (MAX > 0). If $\lvert f(v_s)\rvert < \epsilon$, then v_s is assumed to be the root required.
EPSO	ϵ_o	real	Permittivity of free space.

Input Name	Equation Name	Type	Definition
EPSA	ϵ_A	real	Dielectric constant for Medium A.
WH	ωh	real	Frequency thickness product.
WXA	ωx_A	real	Normalized distance into Medium A.
DWXA	$\Delta\omega x_A$	real	In order to vary ωx_A (WXA) from an initial value, ωx_A, to a final value $\omega x_{A_{max}}$, DWXA must be set equal to the desired step size. See WXAMAX.
WXAMAX	$\omega x_{A_{max}}$	real	The maximum value of ωx_A to be used when DWXA $\neq 0$.
WXB	ωx_B	real	Normalized distance into Medium B.
DWXB	$\Delta\omega x_B$	real	In order to vary ωx_B from an initial value, ωx_B, to a final value, $\omega x_{B_{max}}$, DWXB must be set equal to the step size desired. See WXBMAX.
WXBMAX	$\omega x_{B_{max}}$	real	The maximum value of ωx_B to be used when DWXB $\neq 0$.
ICHECK	----	logical	ICHECK = .TRUE. – All FINAL ANSWERS* are computed in addition to the evaluation of the determinant $\lvert f(v_s)\rvert$. ICHECK = .FALSE. – FINAL ANSWERS are <u>not</u> computed; evaluate determinant only.
MAX	----	integer	Since an iteration scheme is used for convergence for a final root v_s, there must be an indication of how many iterations are to be executed before divergence is assumed. Hence, MAX should be the maximum number of iterations the user wishes the program to make (usually 15). If MAX is set to zero (MAX = 0) the determinant $\lvert f(v_s)\rvert$ will be evaluated for the particular v_s value input – the iteration scheme will not be used. This option may be useful if there is difficulty in determining the range in which v_s lies.

*The FINAL RESULTS, which are computed for all values of WXA (dielectric layer) and WXB (piezoelectric layer), include the following:

- Stress Components
- Strain Components
- Time Average Power Flow
- Electric Displacement
- Mechanical Displacement
- Electric Potential Magnitude
- Electric Field

Input Name	Equation Name	Type	Definition
TITLE	----	BCD	An alphanumeric array of 24 characters or less used to describe the type of crystal, such as lithium niobate. This is input in the following manner: TITLE = nH name of crystal, where n is the number of characters following the H (including blanks). For example TITLE = 6HQUARTZ
HXAGNL	----	logical	Parameter which controls the calculation of betas (β's) for a hexagonal crystal (such as zinc oxide) .TRUE. hexagonal crystal (use special technique) .FALSE. non-hexagonal crystal (use normal procedure)
VSINC	----	logical	VSINC = .TRUE. – New estimates of initial velocity (v_s) are computed using a linear fit to the two previous values. (Used when NUB varies over a range NUB, NUB + DNU, ... , NUMAX) VSINC = .FALSE. – The same initial estimate of velocity is used for all values over the specified range of NUB.
IOP	----	integer	Degenerate case options (used when exactly four α's with positive real part occur). IOP = 1 – seek modes of propagation of the Quasi-Rayleigh or Sesawa type. IOP = 2 – seek modes of propagation of Love type.
REPEAT	----	logical	REPEAT is a logical variable and in its usage, can take only one value: .TRUE. If there are no more cases to run after the current case, REPEAT does not need to be input. If there will be another case to follow, but the crystal coefficients remain the same, then, again, REPEAT does not need to be input. However, if another case is to be run and the coefficients are different, then REPEAT needs to be input

Input Name	Equation Name	Type	Definition
			as .TRUE. This means that the $CONST data will have to be input again (in the other cases above, $CONST would not have to be input again).

The following input parameters are all logical variables which are assumed to be false (.FALSE.) in the program. They are used as switches indicating whether or not intermediate calculations are to be printed. If any one, or any combination of these parameters are input as true (.TRUE.), then certain intermediate data will print, according to the following:

TABCTE	Print the constants E, C, and T (the transformed piezoelectric, elastic, and dielectric constants) calculated from the constants P, G, and EPS.
ROOTS	Print the roots of the polynomial each time they are calculated.
BETA	Print the values of β_{ij}.
DETERM	Print the value of the determinant.
COEFF	Print the coefficients of the 8'th order polynomial.
TABL	Print the L matrix (or $\hat{P}$, $\hat{Q}$, $\hat{R}$, etc., when used).
ALPHA	Print the roots of the polynomial (α_B^j's) and the re-ordered roots for degenerate cases.
ALL	Print all of the above.

Data items may be excluded from the input stream at the discretion of the user. Items omitted from the first data set will take on nominal values (i.e.: values assigned within the program). Items omitted from succeeding data sets will take on previously assigned values. The following is a complete list of nominal values:*

*All logical parameters have a nominal value of .FALSE.

Parameter	Nominal Value
LAMDAB	0.
MUB	0.
NUB	0.
DNU	0.
NUMAX	0.
VS	3000.
DVS	0.
VSMAX	0.
LAMDAA	1.5×10^{11}
MUA	2.85×10^{10}
RHOA	1.888×10^{4}
RHOB	4700.
EPSLON	$1. \times 10^{-11}$
EPSO	8.85×10^{-12}
EPSA	44.25×10^{-12}
WH	0.
WXA	0.
DWXA	0.
WXAMAX	0.
WXB	0.
DWXB	0.
WXBMAX	0.
MAX	15.
TITLE	LITHIUM NIOBATE
IOP	1

The following is a description of the computer program flow diagram provided at the end of this section.

The computer program for this problem shares many common features with the programs described in the preceding sections. Again the nominal data values are set up first. The piezoelectric (P), elastic (G), and dielectric (EPS) constants are read in next (CONST DATA). Following this the rest of the input data is entered (INPUT DATA).

Subroutine SETCTE computes the transformed piezoelectric (CE), elastic (CC), and dielectric (CT) constants. Next, subroutine ROOT performs the calculations and calls the subroutines necessary to computer F(VS), the boundary condition determinant. ROOT will either minimize F(VS) (root finding scheme) or simply compute it at velocity VS depending on the setting of the counter MAX. Upon returning to the main program an option to increment VS followed by an option to increment the third Euler angle (NU) is available as in the first two programs. As NU is incremented it is also possible to update the initial velocity (VS) if the root finding scheme is being employed so that a closer initial estimate will be had as NU varies. The setting of a logical variable (VSINC) dictates whether this updating scheme is to be used or not.

When the correct velocity of propagation has been found (either from the root finding scheme or from plotting F(VS) as a function of velocity) the relative amplitudes of the partial surface wave fields are calculated (ETA(1), ETA(2), etc.). Next the various quantities of interest are calculated in medium A (the dielectric) as a function of normalized distance (WX_A) into the medium. Following this the same parameters are calculated in medium B (crystal) as a function of normalized distance (WX_B) into the crystal. For both media an incrementation scheme may be used to increase WX_A or WX_B in equal increments (DWXA or DWXB) from some initial value to some final value.

The quantities of interest mentioned above are as follows:

a) Mechanical Displacement (magnitude and phase) referred to as MAGU(I) and PHASEU(I), I=1 to 3 in the program.

b) The electric potential (magnitude and phase) referred to as MAGU(4) and PHASEU(4).

c) The time average power flow computed in the subroutine PIFUN.

d) The stresses computed in the subroutine TFUN.

e) The strains computed in subroutine SFUN.

f) The electric fields (E1, E3) and electric displacement (D1, D2, and D3).

Calculation of F(VS)

Subroutine ROOT calls subroutine F to evaluate the determinant of the boundary condition matrix. F first calls subroutine STRIP to calculate the coefficients of the eighth order equation in α. Next subroutine CROOT computes the roots of the polynomial (ALFA(I), I=1 to 8). The roots with positive real parts (ALFAB(I), I=1 to K) are selected as in the other programs and the extraneous roots in the non-piezoelectric case are eliminated.

If K = 0 the case terminates since no solution is possible. If $K \neq 0$ a search for degeneracies follows. K = 1 presents a possibility now which was not present in the previous problems.* First $\hat{A}_{12}$ and $\hat{A}_{23}$ are checked ($\hat{A}$ is the matrix of the coefficients of the unknown amplitudes $\beta_i^{(\ell)}$ as in the previous problems). If $\hat{A}_{12}$ and $\hat{A}_{23}$ are not both equal to zero the case cannot be degenerate. A check is made to see if the following two conditions both hold:

a) The case is non-piezoelectric

b) $K \neq 3$

If both of these conditions hold the case terminates. If it is not true that both hold then a test is made to see if the following two conditions hold:

a) The case is piezoelectric

b) $K \neq 4$.

If both of these conditions hold the case terminates. Otherwise the program continued for now we must have either a non-piezoelectric case with K = 3 or a piezoelectric case with K = 4, both of which are proper non-degenerate cases.

If $\hat{A}_{12}$ and $\hat{A}_{23}$ are both identically zero and the case is non-piezoelectric, the program proceeds to the section where degenerate, non-piezoelectric cases

*Page 37 of analysis.

are handled. If, however, the case is piezoelectric $\hat{A}_{24}$ is checked. If $\hat{A}_{24}$ is zero the first type of degenerate case of the analysis section arises and the program proceeds to that section which treats such cases. If $\hat{A}_{24}$ is not identically zero then $\hat{A}_{14}$ and $\hat{A}_{34}$ are checked. If they are identically zero, the second degenerate case of the analysis section arises and the program proceeds to the section that treats these cases. If they are not both zero the program goes through the test mentioned above (i.e. is it simultaneously true that (a) the case is piezoelectric and (b) $K \neq 4$.

If (a) and (b) are not simultaneously true then we are dealing with a non-degenerate, piezoelectric case and the program proceeds accordingly.

Non-degenerate Cases

The $\hat{A}$ matrix is set up for each value of α ($k = 1, K4$) where $K4 = 4$ for piezoelectric cases and $K4 = 3$ for non-piezoelectric cases. If the case is non-piezoelectric the program sets $\beta_4 = 0$, $\beta_3 = 10^{-10}$ and solves the first two equations for β_1 and β_2. If the crystal is piezoelectric and not hexagonal β_4 is set equal to 1 and the first three equations of the set are solved for β_1, β_2, and β_3. If the crystal is piezoelectric and hexagonal β_1 is set equal to 10^{-10} and the second, third, and fourth equations of the set are solved for β_2, β_3, and β_4.

Degenerate Case 1

This case is characterized by a decoupling of the equations for $\beta_1^{(\ell)}$ so that three of the equations involve β_1, β_3, and β_4 only and one involves β_2 only as discussed in the analysis. If there are four α's with positive real part ($K = 4$) the program calculates $|\hat{A}_{22}|$ for each α and determines which α leads to a minimum of this function. This now becomes $\alpha^{(1)}$ while the other α's become $\alpha^{(2)}$, $\alpha^{(3)}$, and $\alpha^{(4)}$. The program proceeds to work with the relabeled α's and computes the β's as follows:

$$\beta_2^{(1)} = 10^{-10}, \quad \beta_i^{(1)} = 0 \qquad i = 1, 3, 4; \qquad \beta_2^{(\ell)} = 0, \quad \beta_4^{(\ell)} = 1$$

$$\beta_1^{(\ell)} = \frac{\hat{A}_{13}^{(\ell)}\hat{A}_{34}^{(\ell)} - \hat{A}_{14}^{(\ell)}\hat{A}_{33}^{(\ell)}}{\hat{A}_{11}^{(\ell)}\hat{A}_{33}^{(\ell)} - \hat{A}_{13}^{(\ell)2}}, \quad \text{and} \quad \beta_3^{(\ell)} = \frac{\hat{A}_{13}^{(\ell)}\hat{A}_{14}^{(\ell)} - \hat{A}_{11}^{(\ell)}\hat{A}_{34}^{(\ell)}}{\hat{A}_{11}^{(\ell)}\hat{A}_{33}^{(\ell)} - A_{13}^{(\ell)2}}$$

$\ell = 2, 3, 4$. The program now proceeds to set up either the M(10 x 10) or

N (3 x 3) matrix discussed in the analysis and evaluates its determinant.

If there are less than four α's with positive real part ($K < 4$) the program calculates $|\hat{A}_{22}|$ for each α and counts the number (N1) of α's for which $|\hat{A}_{22}| < 10^7$ (this is close enough to zero considering the magnitude of the individual terms in $\hat{A}_{22}$). If K = 1 and N1 = 0 the case terminates (case 1c2). If K = 1 and N1 = 1 the program sets $\beta_2^{(1)} = 10^{-10}$ $\beta_i^{(1)} = 0$ i = 1, 3, 4 and then proceeds to set up the N matrix and evaluate its determinant (case 1c1).

If K = 2 and N1 = 0 the case terminates (case 1b3). If K = 2 and N1 = 1 the α that yielded $|\hat{A}_{22}| < 10^7$ becomes $\alpha^{(1)}$. The program now sets $\beta_2^{(1)} = 10^{-10}$ and $\beta_i^{(1)} = 0$ i = 1, 3, 4 and then proceeds to set up the N matrix and evaluate its determinant (case 1b1). If K = 2 and N1 = 2 this represents an impossible case and the case terminates (1b2).

If K = 3 and N1 = 0 then all three roots correspond to the $(\beta_1, \beta_3, \beta_4)$ split. The α's become $\alpha^{(2)}$, $\alpha^{(3)}$, and $\alpha^{(4)}$. The β's are calculated as they are in the four α case for $\alpha^{(2)}$, $\alpha^{(3)}$, and $\alpha^{(4)}$. Only the M matrix can be set up and evaluated for this case (case 1a1). If K = 3 and N1 = 1 the corresponding α becomes $\alpha^{(1)}$ and $\beta_2^{(1)} = 10^{-10}$ while $\beta_i^{(1)} = 0$ i = 1, 3, 4. Only the N matrix is set up and evaluated (case 1a2). If K = 3 and N1 = 2 or more the case terminates since this is physically impossible.

Degenerate Case 2

This case is characterized by a decoupling of the equations for $\beta_i^{(\ell)}$ so that two of the equations involve β_1 and β_3 only while the other two involve β_2 and β_4 only. If there are four α's with positive real part (K = 4) the program calculates $|\hat{A}_{22}\hat{A}_{44}-\hat{A}_{24}^2|$ for each α. The (2) values of $\alpha^{(\ell)}$ which lead to minimum values of $|\hat{A}_{22}\hat{A}_{24}- \hat{A}_{24}^2|$ are selected and become $\alpha^{(3)}$ and $\alpha^{(4)}$. The other (2) values of α become $\alpha^{(1)}$ and $\alpha^{(2)}$. The program then computes the β's as follows:

$$\beta_3^{(1)} = \beta_3^{(2)} = 10^{-10}; \quad \beta_1^{(1)} = \frac{-\hat{A}_{13}^{(1)}}{\hat{A}_{11}^{(1)}} \cdot 10^{-10}, \quad \beta_1^{(2)} = \frac{-\hat{A}_{13}^{(2)}}{\hat{A}_{11}^{(2)}} \cdot 10^{-10} \quad ;$$

$$\beta_2^{(1)} = \beta_2^{(2)} = 0 \quad ;$$

$$\beta_4^{(1)} = \beta_4^{(2)} = 0 \quad ;$$

$$\beta_4^{(3)} = \beta_4^{(4)} = 1; \quad \beta_2^{(3)} = \frac{-\hat{A}_{24}^{(3)}}{\hat{A}_{22}^{(3)}}, \quad \beta_2^{(4)} = \frac{-A_{24}^{(4)}}{A_{22}^{(4)}} \quad ;$$

$$\beta_1^{(3)} = \beta_1^{(4)} = 0; \quad \beta_3^{(3)} = \beta_3^{(4)} = 0 \quad .$$

The program now proceeds to set up either the P or the Q matrix and evaluates its determinant.

If there are less than four α's with positive real part ($K < 4$) the program proceeds as follows:

If $K = 1$ the case terminates (case 2c). If $K = 2$ or 3 the program computes the quantity $|\hat{A}_{22}\hat{A}_{44} - \hat{A}_{24}^2|$ for each α and counts the number (I1) of α's for which this quantity $< 10^{-5}$ and the number (I2) of α's for which this quantity $\geq 10^{-5}$. 10^{-5} is close enough to zero due to the magnitudes of the individual terms in the quantity. If $K = 3$ and $I1 = 2$ the α's become $\alpha^{(3)}$ and $\alpha^{(4)}$ and the β's are calculated as they were above for $\alpha^{(3)}$ and $\alpha^{(4)}$. Only the Q matrix is set up and evaluated (case 2a1). If $K = 3$ and $I2 = 2$ the α's become $\alpha^{(1)}$ and $\alpha^{(2)}$ and the β's are calculated as above for $\alpha^{(1)}$ and $\alpha^{(2)}$. Only the P matrix is set up and evaluated (case 2a2). If $K = 3$ while $I1 \neq 2$ and $I2 \neq 2$ the case terminates (case 2a3). If $K = 2$ and $I1 = 2$ the β's are handled as above (case 2b1). If $K = 2$ and $I2 = 2$ the β's are likewise handled as above (case 2b2). If $K = 2$ while $I1 \neq 2$ and $I2 \neq 2$ the case terminates (case 2b3).

Degenerate Non-piezoelectric Case

This case is characterized by a decoupling of the equations for $\beta_i^{(\ell)}$ such that two of the equations involve β_1 and β_3 only and one of the equations involves

β_2 only. If there are three α's with positive real part $|\hat{A}_{22}|$ is evaluated for each α. The α leading to the minimum value of $|\hat{A}_{22}|$ becomes $\alpha^{(1)}$ while the others become $\alpha^{(2)}$ and $\alpha^{(3)}$. The program sets $\beta_2^{(1)} = 10^{-10}$, $\beta_i^{(1)} = 0$ $i = 1$ and 3; $\beta_2^{(\ell)} = 0$, $\beta_3^{(\ell)} = 10^{-10}$, $\beta_1^{(\ell)} = -\hat{A}_{13}^{(\ell)}/\hat{A}_{11}^{(\ell)} \cdot 10^{-10}$ $\ell = 2$ and 3. Either the R or N matrix can be set up and evaluated depending on the type of wave sought.

If there are two α's with positive real part $|\hat{A}_{22}|$ is evaluated for both α's and compared with 10^7. (This is close enough to zero considering the magnitudes of the individual terms of $\hat{A}_{22}$). If $|\hat{A}_{22}| > 10^7$ for both α's they become $\alpha^{(2)}$ and $\alpha^{(3)}$ and the β's are calculated as above. Only the R matrix is set up and its determinant evaluated (case xa1). If $|\hat{A}_{22}| \leq 10^7$ for one of the α's this becomes $\alpha^{(1)}$ and the β's are the same as above. Only the N matrix is set up and its determinant evaluated (case xa2). If $|\hat{A}_{22}| \leq 10^7$ for both α's the case is terminated (case xa3).

If there is one α with positive real part $|\hat{A}_{22}|$ is evaluated and compared to 10^7. If $|\hat{A}_{22}| \leq 10^7$ the program sets $\beta_2^{(1)} = 10^{-10}$ $\beta_i^{(1)} = 0$ $i = 1$ and 3. Only the N matrix is set up and its determinant evaluated (case ya1). If $|A_{22}| > 10^7$ the case is terminated (case ya2).

DIELECTRIC

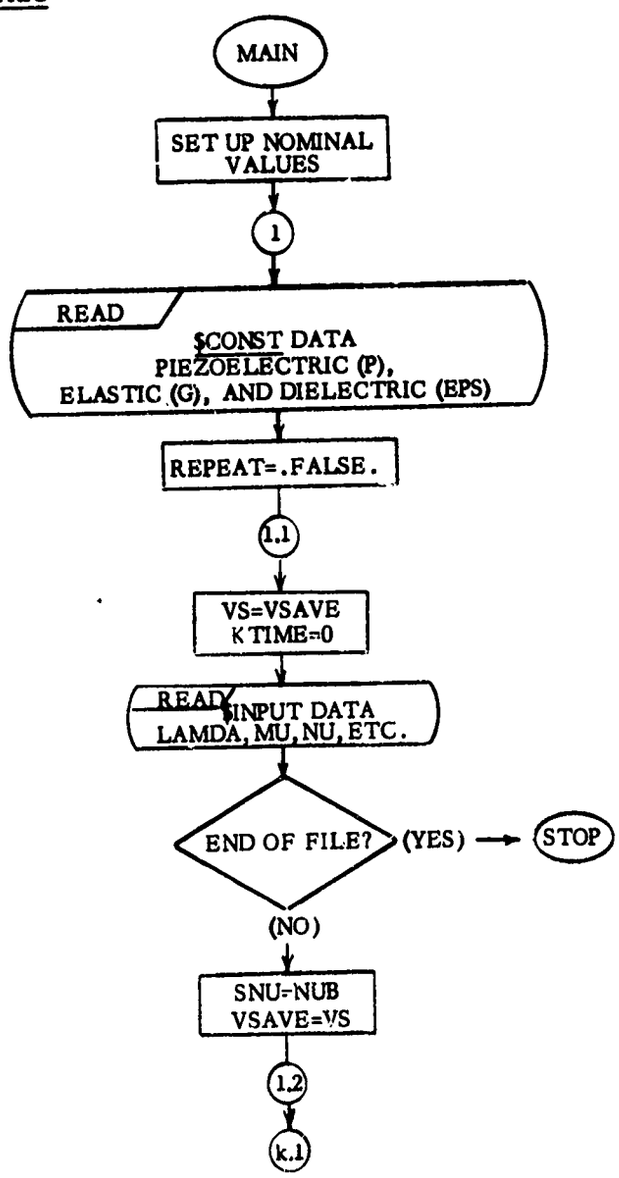
MAIN
SET UP NOMINAL VALUES
1
READ
$CONST DATA
PIEZOELECTRIC (P),
ELASTIC (G), AND DIELECTRIC (EPS)
REPEAT=.FALSE.
1.1
VS=VSAVE
KTIME=0
READ
$INPUT DATA
LAMDA, MU, NU, ETC.
END OF FILE?
(YES)
STOP
(NO)
SNU=NUB
VSAVE=VS
1.2
k.1

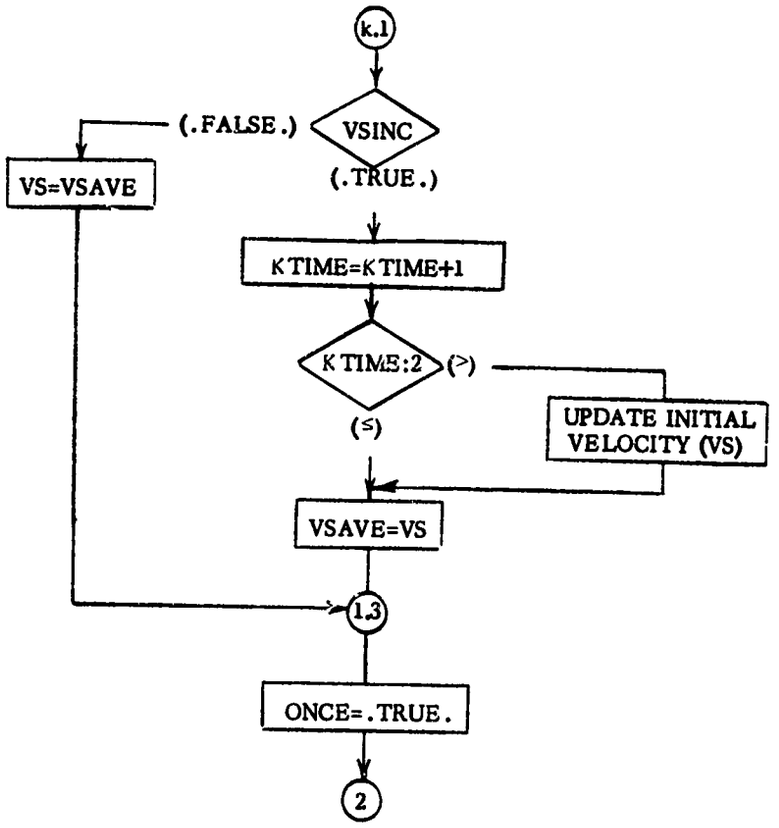
k.1
VSINC
(.FALSE.)
VS=VSAVE
(.TRUE.)
KTIME=KTIME+1
KTIME:2
(>)
(≤)
UPDATE INITIAL VELOCITY (VS)
VSAVE=VS
1.3
ONCE=.TRUE.
2

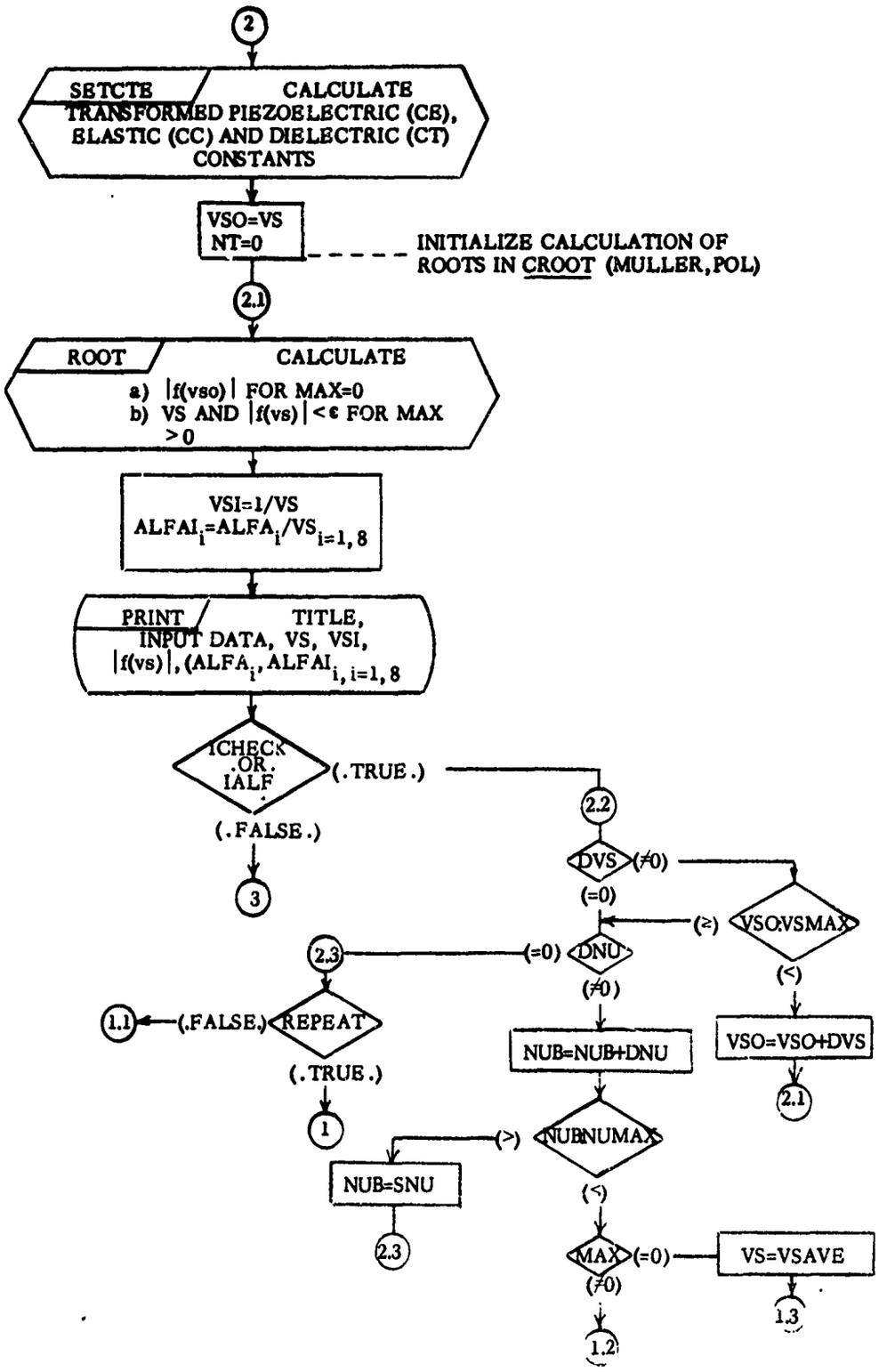
2
SETCTE
CALCULATE
TRANSFORMED PIEZOELECTRIC (CE), ELASTIC (CC) AND DIELECTRIC (CT) CONSTANTS
VSO=VS
NT=0
INITIALIZE CALCULATION OF ROOTS IN CROOT (MULLER,POL)
2.1
ROOT
CALCULATE
a) |f(vso)| FOR MAX=0
b) VS AND |f(vs)| < ε FOR MAX > 0
VSI=1/VS
ALFAI_i=ALFA_i/VS_i=1,8
PRINT
TITLE, INPUT DATA, VS, VSI, |f(vs)|, (ALFA_i, ALFAI_i, i=1,8
ICHECK .OR. IALF
(.TRUE.)
(.FALSE.)
3
2.2
DVS
(≠0)
(=0)
(≥)
VSO.VSMAX
(<)
VSO=VSO+DVS
2.1
DNU
(=0)
(≠0)
2.3
REPEAT
(.FALSE.)
1.1
(.TRUE.)
1
NUB=NUB+DNU
NUB.NUMAX
(>)
NUB=SNU
2.3
(<)
MAX
(=0)
VS=VSAVE
1.3
(≠0)
1.2

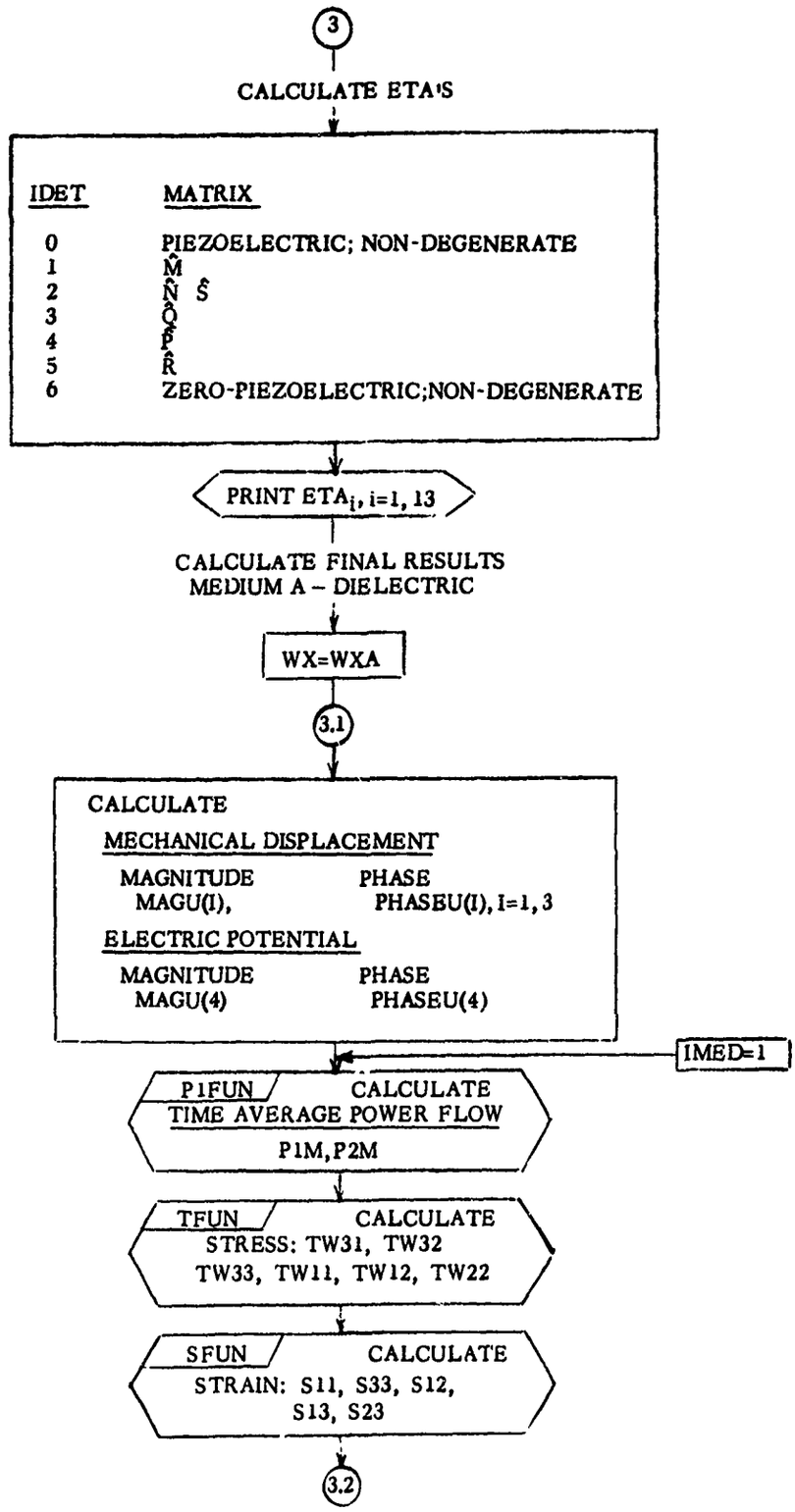
3
CALCULATE ETA'S
IDET MATRIX
0 PIEZOELECTRIC; NON-DEGENERATE
1 M̂
2 N̂ Ŝ
3 Q̂
4 P̂
5 R̂
6 ZERO-PIEZOELECTRIC;NON-DEGENERATE
PRINT ETA$_i$, i=1, 13
CALCULATE FINAL RESULTS
MEDIUM A – DIELECTRIC
WX=WXA
3.1
CALCULATE
MECHANICAL DISPLACEMENT
MAGNITUDE MAGU(I), PHASE PHASEU(I), I=1, 3
ELECTRIC POTENTIAL
MAGNITUDE MAGU(4) PHASE PHASEU(4)
IMED=1
P1FUN CALCULATE
TIME AVERAGE POWER FLOW
P1M, P2M
TFUN CALCULATE
STRESS: TW31, TW32
TW33, TW11, TW12, TW22
SFUN CALCULATE
STRAIN: S11, S33, S12,
S13, S23
3.2

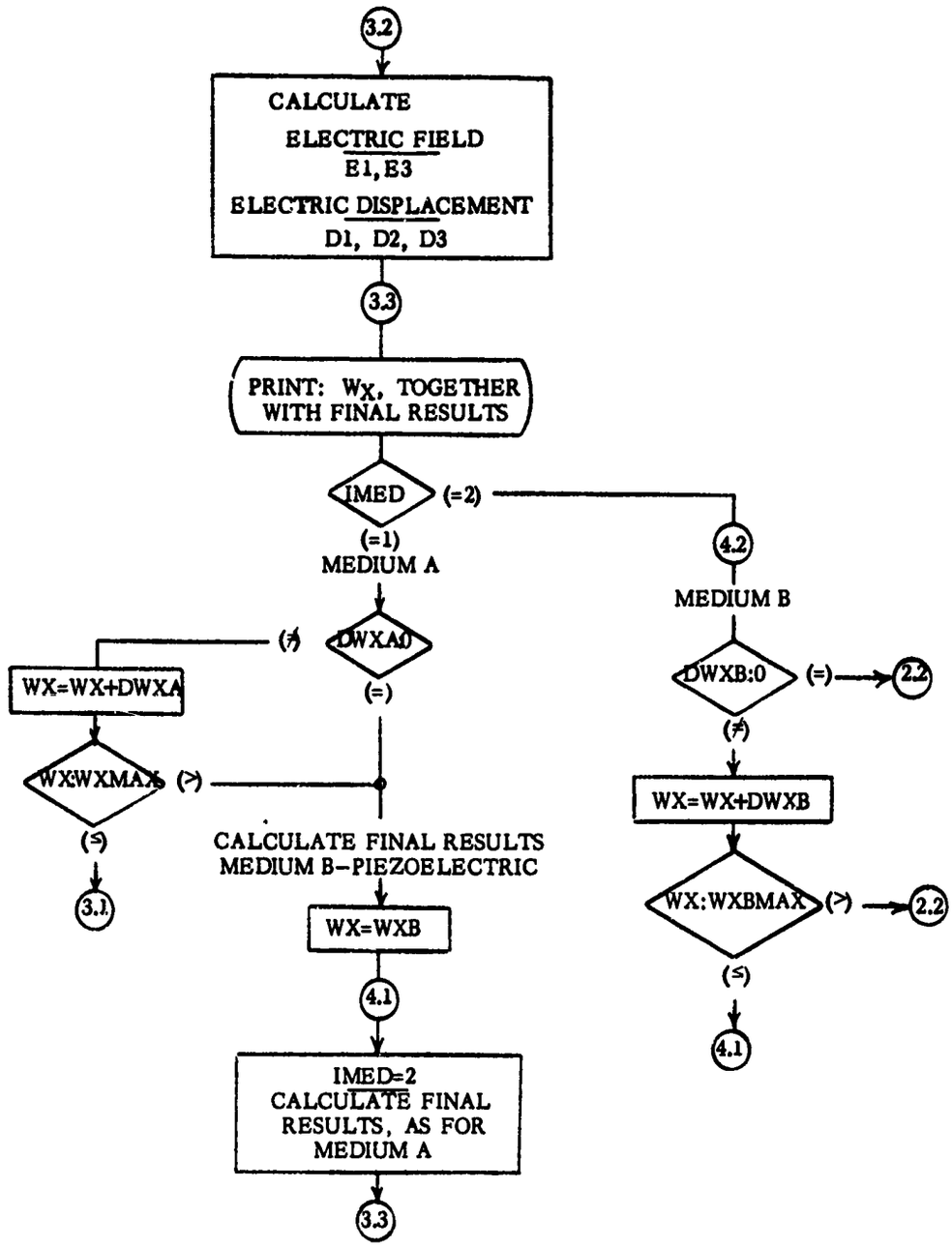
3.2
CALCULATE
ELECTRIC FIELD
E1, E3
ELECTRIC DISPLACEMENT
D1, D2, D3
3.3
PRINT: Wx, TOGETHER WITH FINAL RESULTS
IMED
(=2)
(=1)
MEDIUM A
4.2
MEDIUM B
DWXA:0
(≠)
(=)
WX=WX+DWXA
WX:WXMAX
(>)
(≤)
3.1
CALCULATE FINAL RESULTS
MEDIUM B-PIEZOELECTRIC
WX=WXB
4.1
IMED=2
CALCULATE FINAL RESULTS, AS FOR MEDIUM A
3.3
DWXB:0
(=)
2.2
(≠)
WX=WX+DWXB
WX:WXBMAX
(>)
2.2
(≤)
4.1

DIELECTRIC

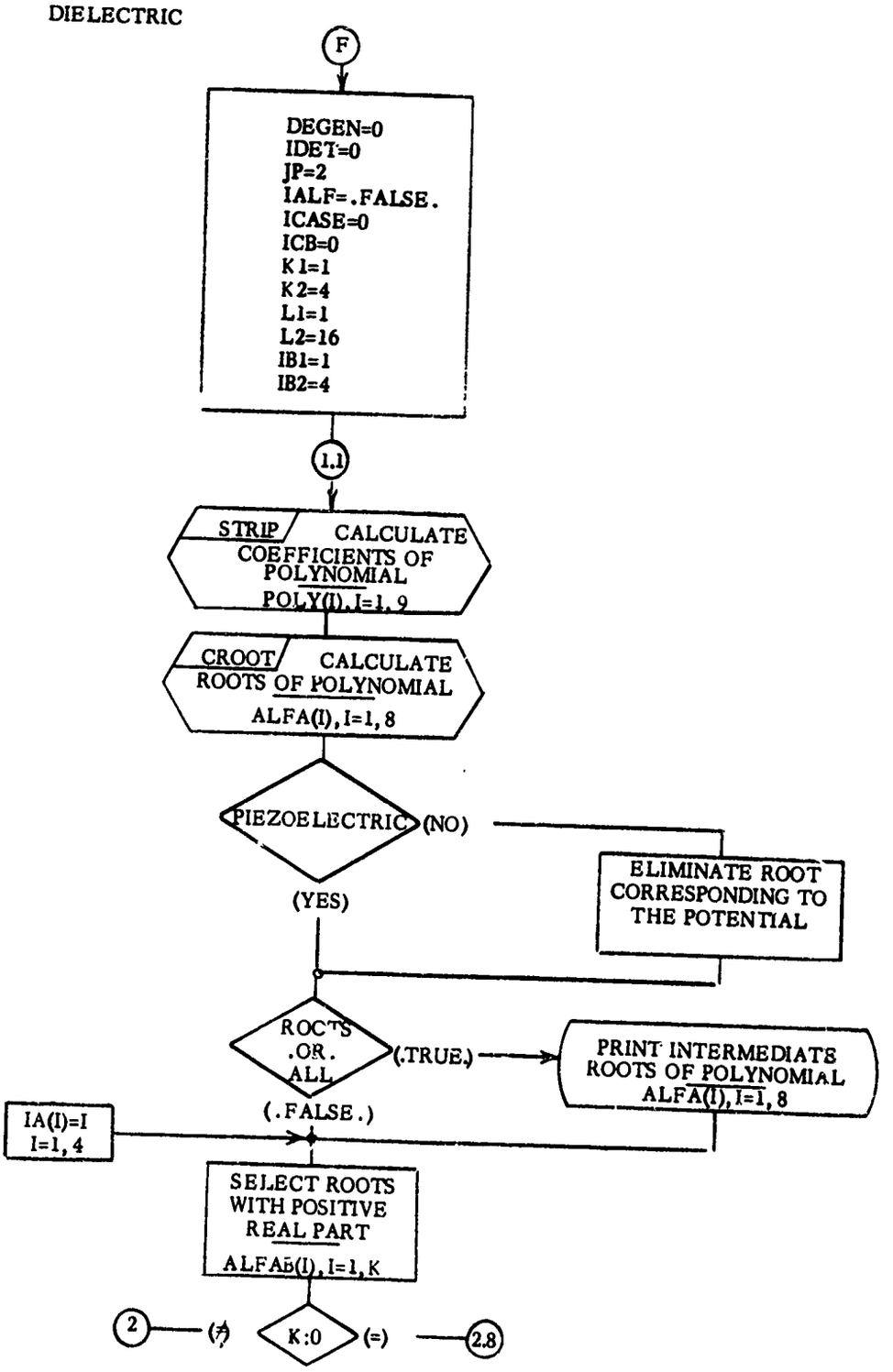
F
DEGEN=0
IDET=0
JP=2
IALF=.FALSE.
ICASE=0
ICB=0
K1=1
K2=4
L1=1
L2=16
IB1=1
IB2=4
1.1
STRIP
CALCULATE COEFFICIENTS OF POLYNOMIAL
POLY(I), I=1, 9
CROOT
CALCULATE ROOTS OF POLYNOMIAL
ALFA(I), I=1, 8
PIEZOELECTRIC
(NO)
(YES)
ELIMINATE ROOT CORRESPONDING TO THE POTENTIAL
ROOTS .OR. ALL
(.TRUE.)
PRINT INTERMEDIATE ROOTS OF POLYNOMIAL
ALFA(I), I=1, 8
(.FALSE.)
IA(I)=I
I=1, 4
SELECT ROOTS WITH POSITIVE REAL PART
ALFAB(I), I=1, K
2
(≠)
K:0
(=)
2.8

$$\beta_3^{(1)} = \beta_3^{(2)} = 10^{-10}; \quad \beta_1^{(1)} = \frac{-\hat{A}_{13}^{(1)}}{\hat{A}_{11}^{(1)}} \cdot 10^{-10}, \quad \beta_1^{(2)} = \frac{-\hat{A}_{13}^{(2)}}{\hat{A}_{11}^{(2)}} \cdot 10^{-10} \;;$$

$$\beta_2^{(1)} = \beta_2^{(2)} = 0 \;;$$

$$\beta_4^{(1)} = \beta_4^{(2)} = 0 \;;$$

$$\beta_4^{(3)} = \beta_4^{(4)} = 1; \quad \beta_2^{(3)} = \frac{-\hat{A}_{24}^{(3)}}{\hat{A}_{22}^{(3)}}, \quad \beta_2^{(4)} = \frac{-A_{24}^{(4)}}{A_{22}^{(4)}} \;;$$

$$\beta_1^{(3)} = \beta_1^{(4)} = 0; \quad \beta_3^{(3)} = \beta_3^{(4)} = 0 \;.$$

The program now proceeds to set up either the P or the Q matrix and evaluates its determinant.

If there are less than four α's with positive real part ($K < 4$) the program proceeds as follows:

If $K = 1$ the case terminates (case 2c). If $K = 2$ or 3 the program computes the quantity $|\hat{A}_{22}\hat{A}_{44} - \hat{A}_{24}^2|$ for each α and counts the number (I1) of α's for which this quantity $< 10^{-5}$ and the number (I2) of α's for which this quantity $\geq 10^{-5}$. 10^{-5} is close enough to zero due to the magnitudes of the individual terms in the quantity. If $K = 3$ and $I1 = 2$ the α's become $\alpha^{(3)}$ and $\alpha^{(4)}$ and the β's are calculated as they were above for $\alpha^{(3)}$ and $\alpha^{(4)}$. Only the Q matrix is set up and evaluated (case 2a1). If $K = 3$ and $I2 = 2$ the α's become $\alpha^{(1)}$ and $\alpha^{(2)}$ and the β's are calculated as above for $\alpha^{(1)}$ and $\alpha^{(2)}$. Only the P matrix is set up and evaluated (case 2a2). If $K = 3$ while $I1 \neq 2$ and $I2 \neq 2$ the case terminates (case 2a3). If $K = 2$ and $I1 = 2$ the β's are handled as above (case 2b1). If $K = 2$ and $I2 = 2$ the β's are likewise handled as above (case 2b2). If $K = 2$ while $I1 \neq 2$ and $I2 \neq 2$ the case terminates (case 2b3).

Degenerate Non-piezoelectric Case

This case is characterized by a decoupling of the equations for $\beta_i^{(\ell)}$ such that two of the equations involve β_1 and β_3 only and one of the equations involves

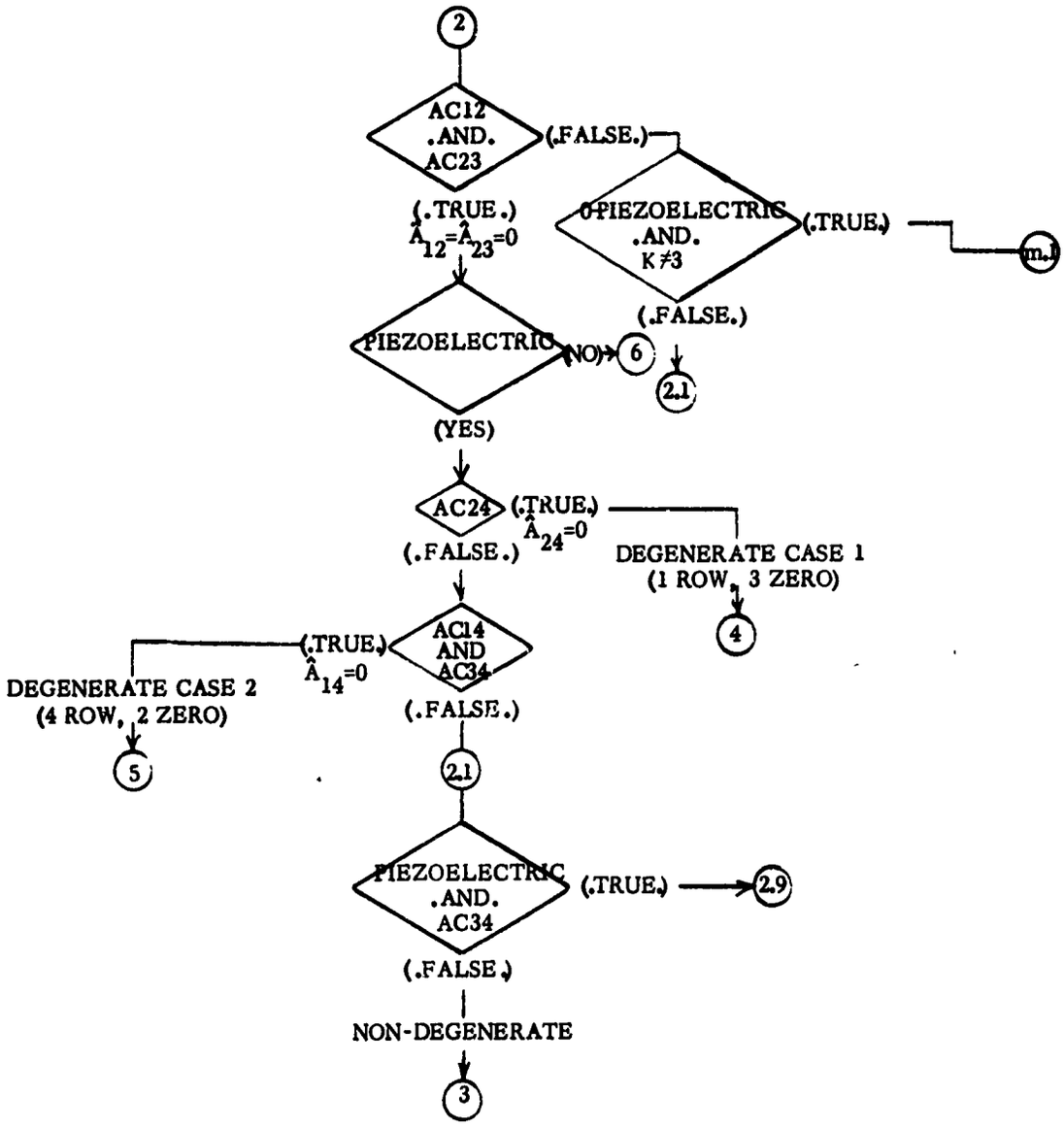
2
AC12
.AND.
AC23
(.FALSE.)
(.TRUE.)
$\hat{A}_{12}=\hat{A}_{23}=0$
PIEZOELECTRIC
.AND.
K≠3
(.TRUE.)
m.1
(.FALSE.)
PIEZOELECTRIC
(NO)
6
2.1
(YES)
AC24
(.TRUE.)
$\hat{A}_{24}=0$
(.FALSE.)
DEGENERATE CASE 1
(1 ROW, 3 ZERO)
4
AC14
AND
AC34
(.TRUE.)
$\hat{A}_{14}=0$
DEGENERATE CASE 2
(4 ROW, 2 ZERO)
5
(.FALSE.)
2.1
PIEZOELECTRIC
.AND.
AC34
(.TRUE.)
2.9
(.FALSE.)
NON-DEGENERATE
3

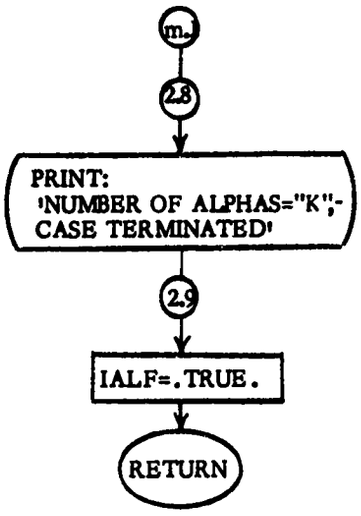
m.
2.8
PRINT:
'NUMBER OF ALPHAS="K";-
CASE TERMINATED'
2.9
IALF=.TRUE.
RETURN

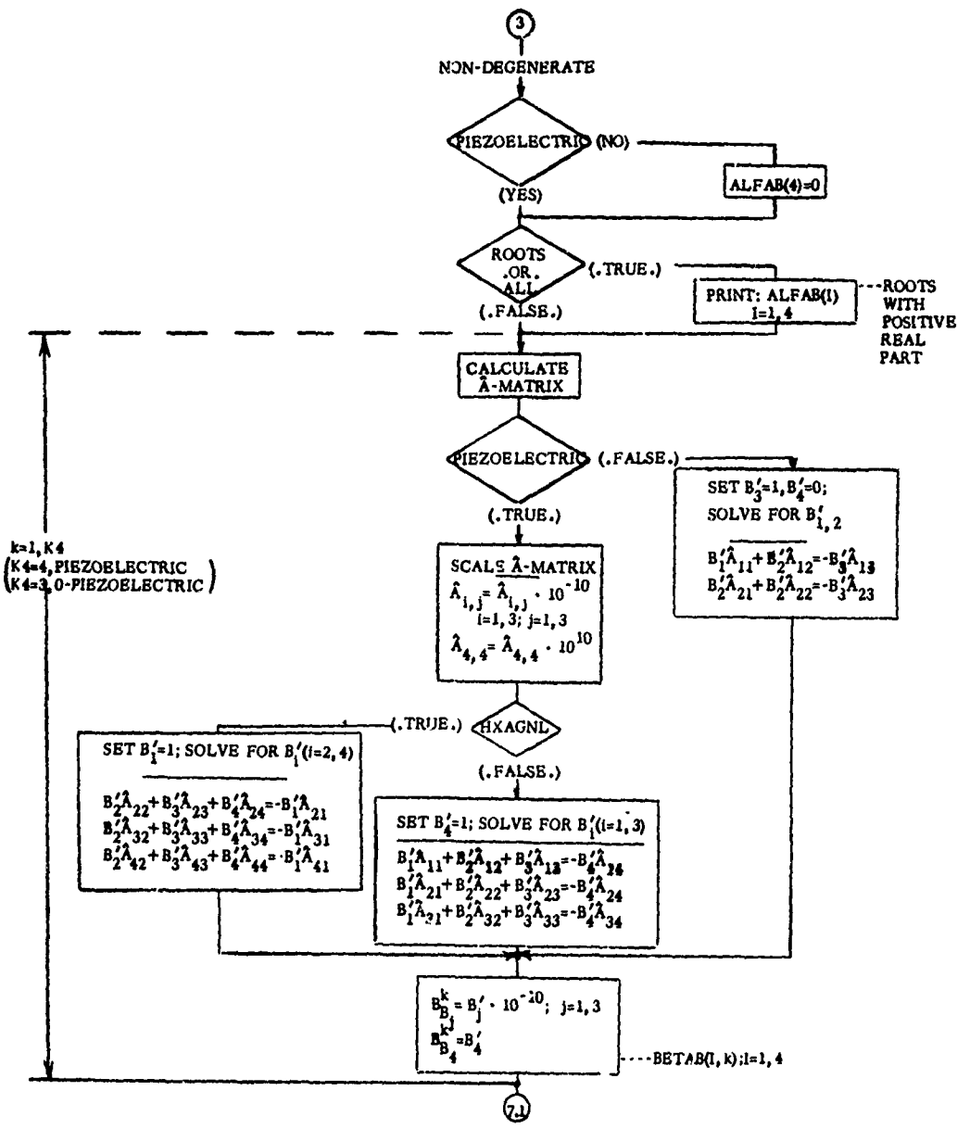
3
NON-DEGENERATE
PIEZOELECTRIC (NO)
(YES)
ALFAB(4)=0
ROOTS .OR. ALL
(.TRUE.)
PRINT: ALFAB(I) I=1,4
---ROOTS WITH POSITIVE REAL PART
(.FALSE.)
CALCULATE Â-MATRIX
PIEZOELECTRIC (.FALSE.)
(.TRUE.)
SET B'3=1, B'4=0; SOLVE FOR B'1,2
B'1Â11+B'2Â12=-B'3Â13
B'2Â21+B'2Â22=-B'3Â23
k=1,K4
(K4=4, PIEZOELECTRIC
K4=3, 0-PIEZOELECTRIC)
SCALE Â-MATRIX
Â1,j=Â1,j · 10^-10
i=1,3; j=1,3
Â4,4=Â4,4 · 10^10
(.TRUE.)
HXAGNL
(.FALSE.)
SET B'1=1; SOLVE FOR B'i(i=2,4)
B'2Â22+B'3Â23+B'4Â24=-B'1Â21
B'2Â32+B'3Â33+B'4Â34=-B'1Â31
B'2Â42+B'3Â43+B'4Â44=-B'1Â41
SET B'4=1; SOLVE FOR B'i(i=1,3)
B'1A11+B'2Â12+B'3Â13=-B'4Â14
B'1Â21+B'2Â22+B'3Â23=-B'4Â24
B'1Â31+B'2Â32+B'3Â33=-B'4Â34
B^k_Bj=B'j · 10^-10; j=1,3
B^k_B4=B'4
----BETAB(I,k);I=1,4
7.1

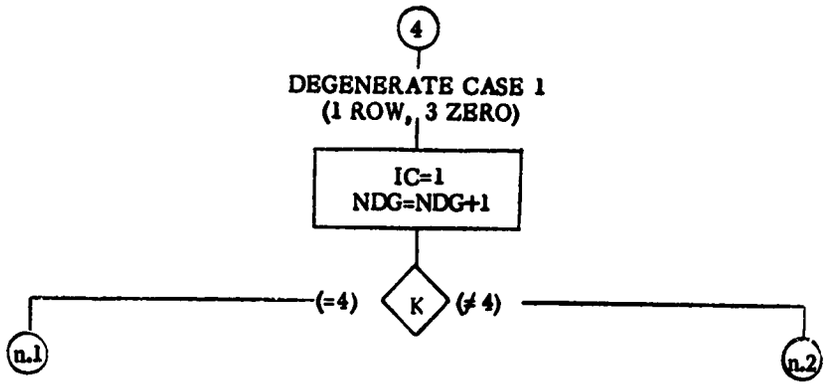
4
DEGENERATE CASE 1
(1 ROW, 3 ZERO)
IC=1
NDG=NDG+1
K
(=4)
(≠ 4)
n.1
n.2

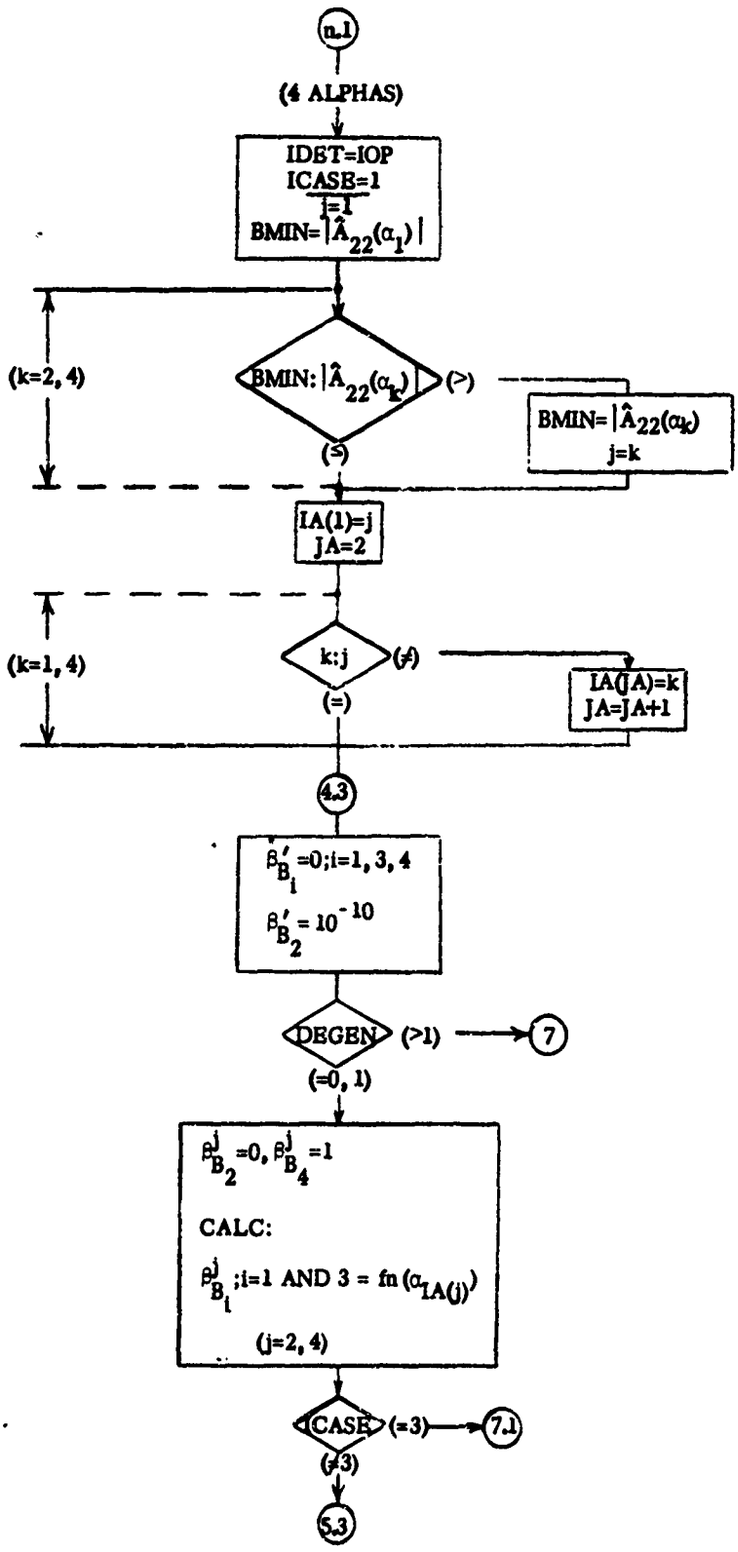
n.1
(4 ALPHAS)
IDET=IOP
ICASE=1
j=1
BMIN=|Â22(α1)|
(k=2, 4)
BMIN: |Â22(αk)|
(>)
(≤)
BMIN=|Â22(αk)
j=k
IA(1)=j
JA=2
(k=1, 4)
k:j
(≠)
(=)
IA(JA)=k
JA=JA+1
4.3
β'B1=0;i=1, 3, 4
β'B2=10^-10
DEGEN
(>1)
7
(=0, 1)
βjB2=0, βjB4=1
CALC:
βjBi;i=1 AND 3 = fn(αIA(j))
(j=2, 4)
CASE
(=3)
7.1
(≠3)
5.3

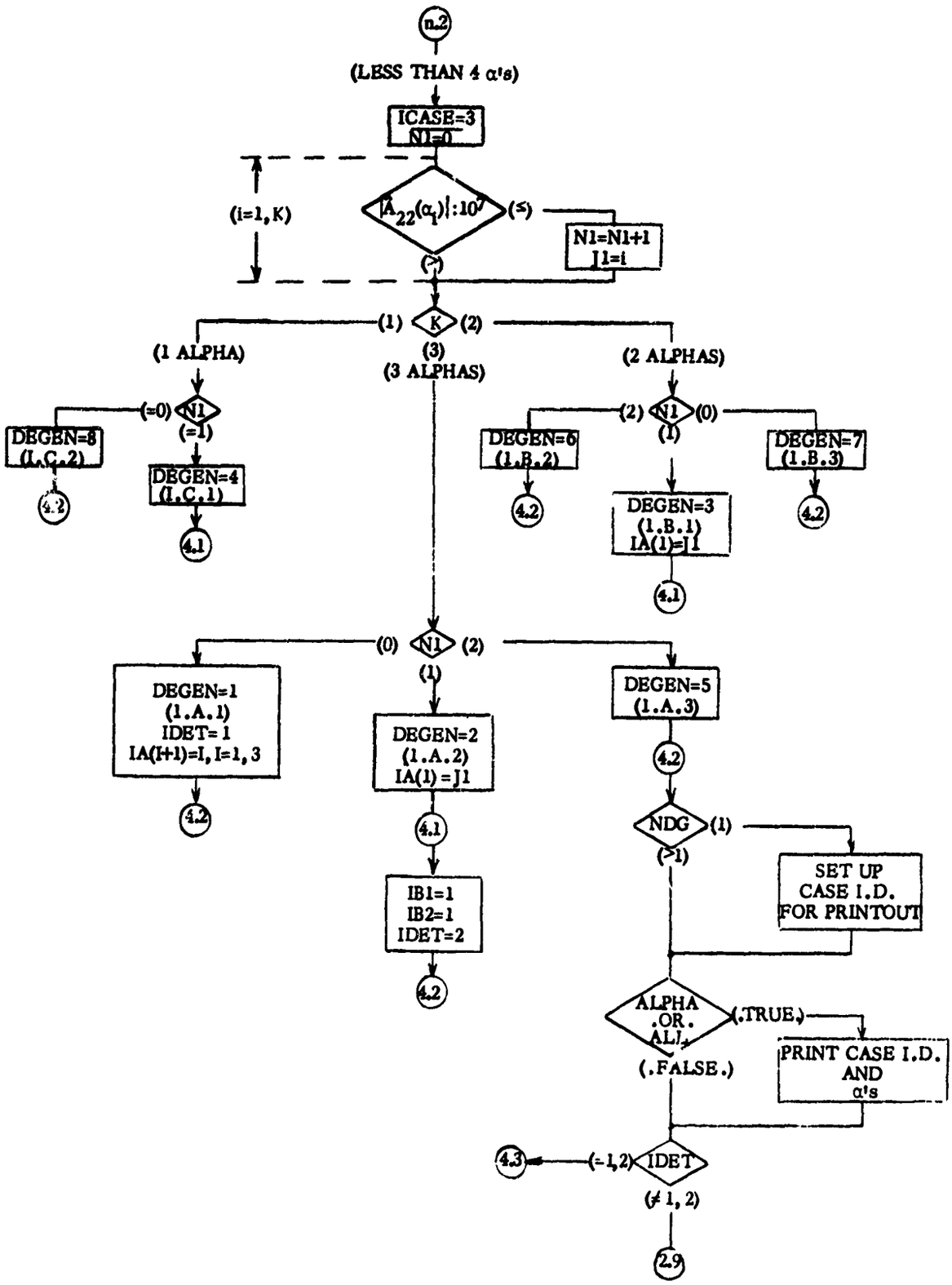
n.2
(LESS THAN 4 α's)
ICASE=3
N1=0
(i=1, K)
|A22(αi)|:10^7
(≤)
N1=N1+1
J1=i
(>)
K
(1)
(2)
(3)
(1 ALPHA)
(3 ALPHAS)
(2 ALPHAS)
N1
(=0)
(=1)
DEGEN=8
(1.C.2)
4.2
DEGEN=4
(1.C.1)
4.1
(2)
(0)
(1)
DEGEN=6
(1.B.2)
4.2
DEGEN=3
(1.B.1)
IA(1)=J1
4.1
DEGEN=7
(1.B.3)
4.2
(0)
(2)
(1)
DEGEN=1
(1.A.1)
IDET=1
IA(I+1)=I, I=1, 3
4.2
DEGEN=2
(1.A.2)
IA(1)=J1
4.1
IB1=1
IB2=1
IDET=2
4.2
DEGEN=5
(1.A.3)
4.2
NDG
(1)
(>1)
SET UP
CASE I.D.
FOR PRINTOUT
ALPHA
.OR.
ALL
(.TRUE.)
(.FALSE.)
PRINT CASE I.D.
AND
α's
4.3
(=1,2)
IDET
(≠1, 2)
2.9

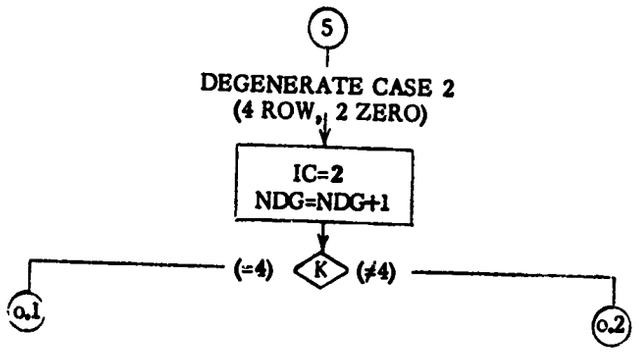
5
DEGENERATE CASE 2
(4 ROW, 2 ZERO)
IC=2
NDG=NDG+1
(=4)
K
(≠4)
o.1
o.2

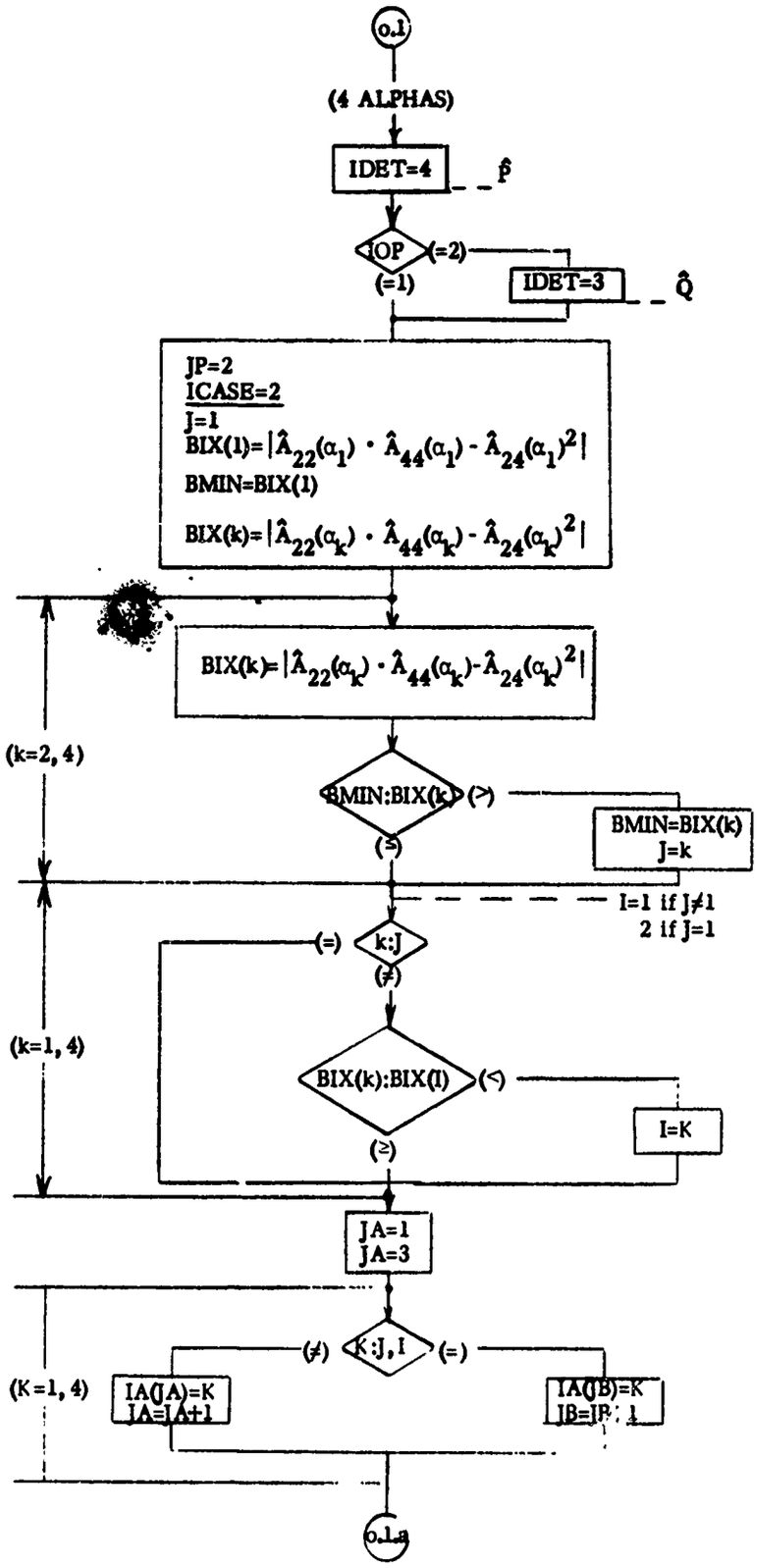
o.1
(4 ALPHAS)
IDET=4
P̂
IOP
(=2)
(=1)
IDET=3
Q̂
JP=2
ICASE=2
J=1
BIX(1)=|Â22(α1) · Â44(α1) - Â24(α1)2|
BMIN=BIX(1)
BIX(k)=|Â22(αk) · Â44(αk) - Â24(αk)2|
BIX(k)=|Â22(αk) · Â44(αk)-Â24(αk)2|
(k=2, 4)
BMIN:BIX(k)
(>)
(≤)
BMIN=BIX(k)
J=k
I=1 if J≠1
2 if J=1
(=)
k:J
(≠)
(k=1, 4)
BIX(k):BIX(I)
(<)
(≥)
I=K
JA=1
JA=3
(≠)
K:J, I
(=)
(K=1, 4)
IA(JA)=K
JA=JA+1
IA(JB)=K
JB=JB-1
o.1a

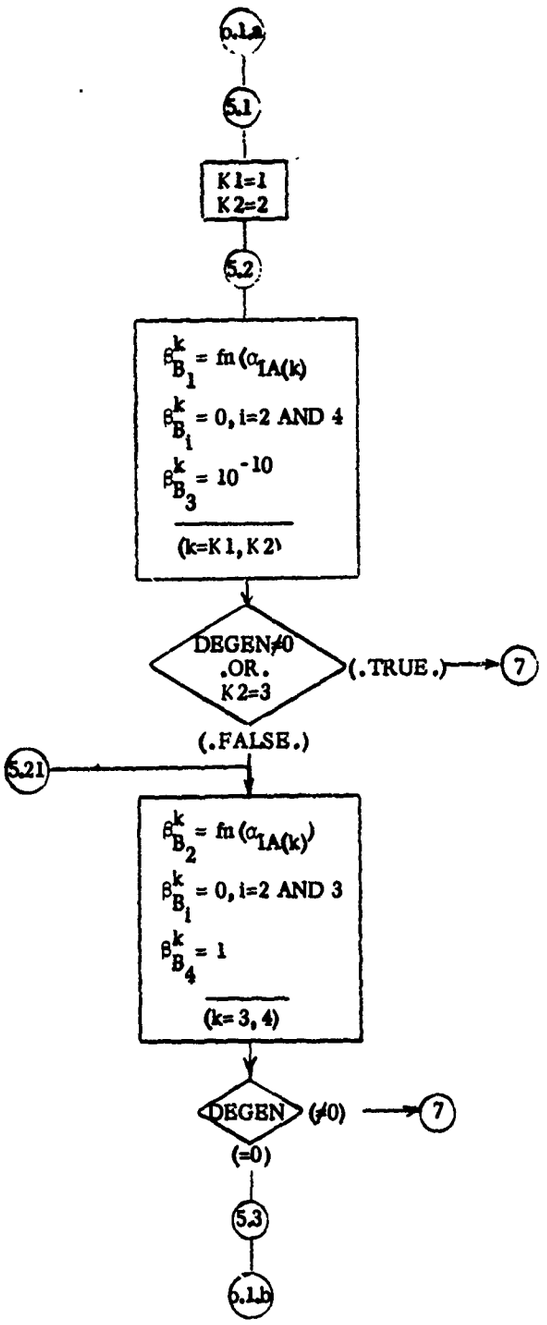
6.1a
5.1
K1=1
K2=2
5.2
$\beta^k_{B_1} = fn(\alpha_{IA(k)})$
$\beta^k_{B_i} = 0, i=2$ AND 4
$\beta^k_{B_3} = 10^{-10}$
(k=K1, K2)
DEGEN≠0
.OR.
K2=3
(.TRUE.)
7
(.FALSE.)
5.21
$\beta^k_{B_2} = fn(\alpha_{IA(k)})$
$\beta^k_{B_i} = 0, i=2$ AND 3
$\beta^k_{B_4} = 1$
(k=3, 4)
DEGEN
(≠0)
7
(=0)
5.3
6.1b

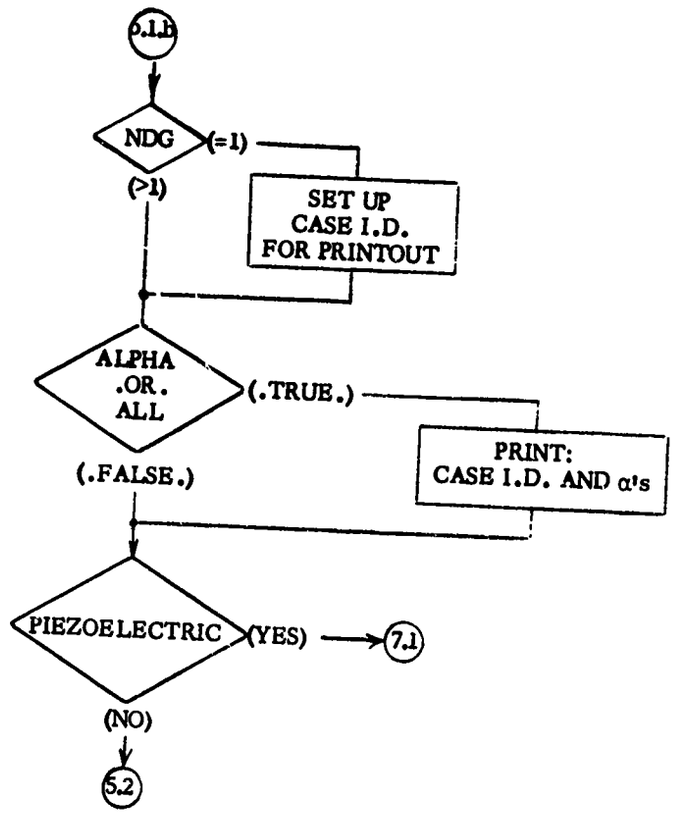
5.1.b
NDG
(=1)
(>1)
SET UP
CASE I.D.
FOR PRINTOUT
ALPHA
.OR.
ALL
(.TRUE.)
(.FALSE.)
PRINT:
CASE I.D. AND α's
PIEZOELECTRIC
(YES)
7.1
(NO)
5.2

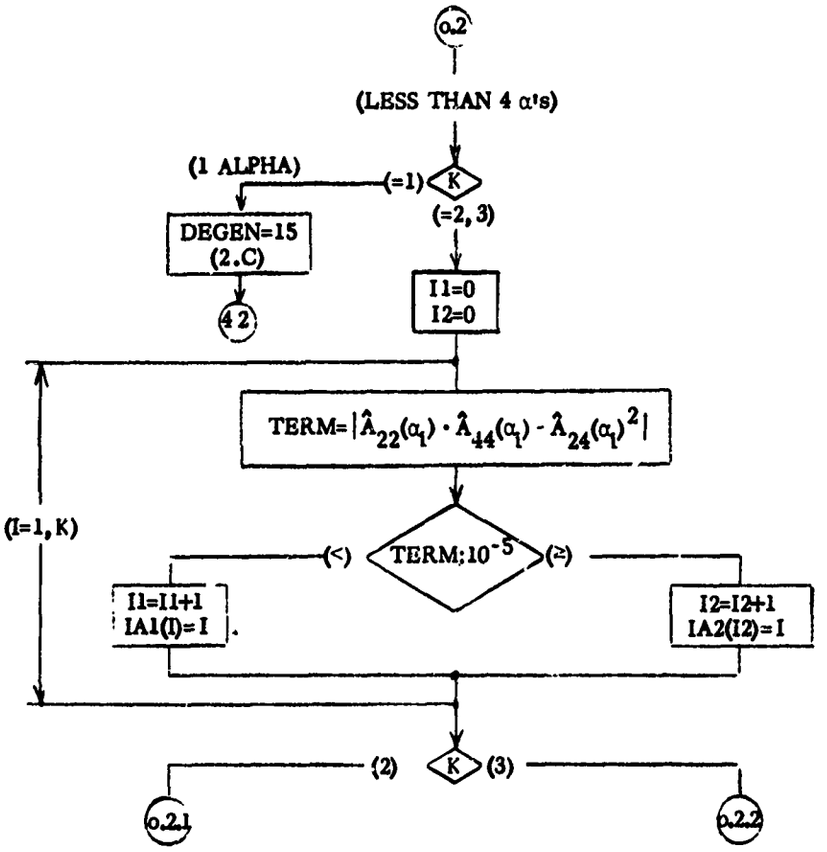
o.2
(LESS THAN 4 α's)
(1 ALPHA)
(=1)
K
(=2, 3)
DEGEN=15
(2.C)
42
I1=0
I2=0
TERM=|Â22(αl) · Â44(αl) - Â24(αl)2|
(I=1, K)
(<)
TERM;10-5
(≥)
I1=I1+1
IA1(I)=I
I2=I2+1
IA2(I2)=I
(2)
K
(3)
o.2.1
o.2.2

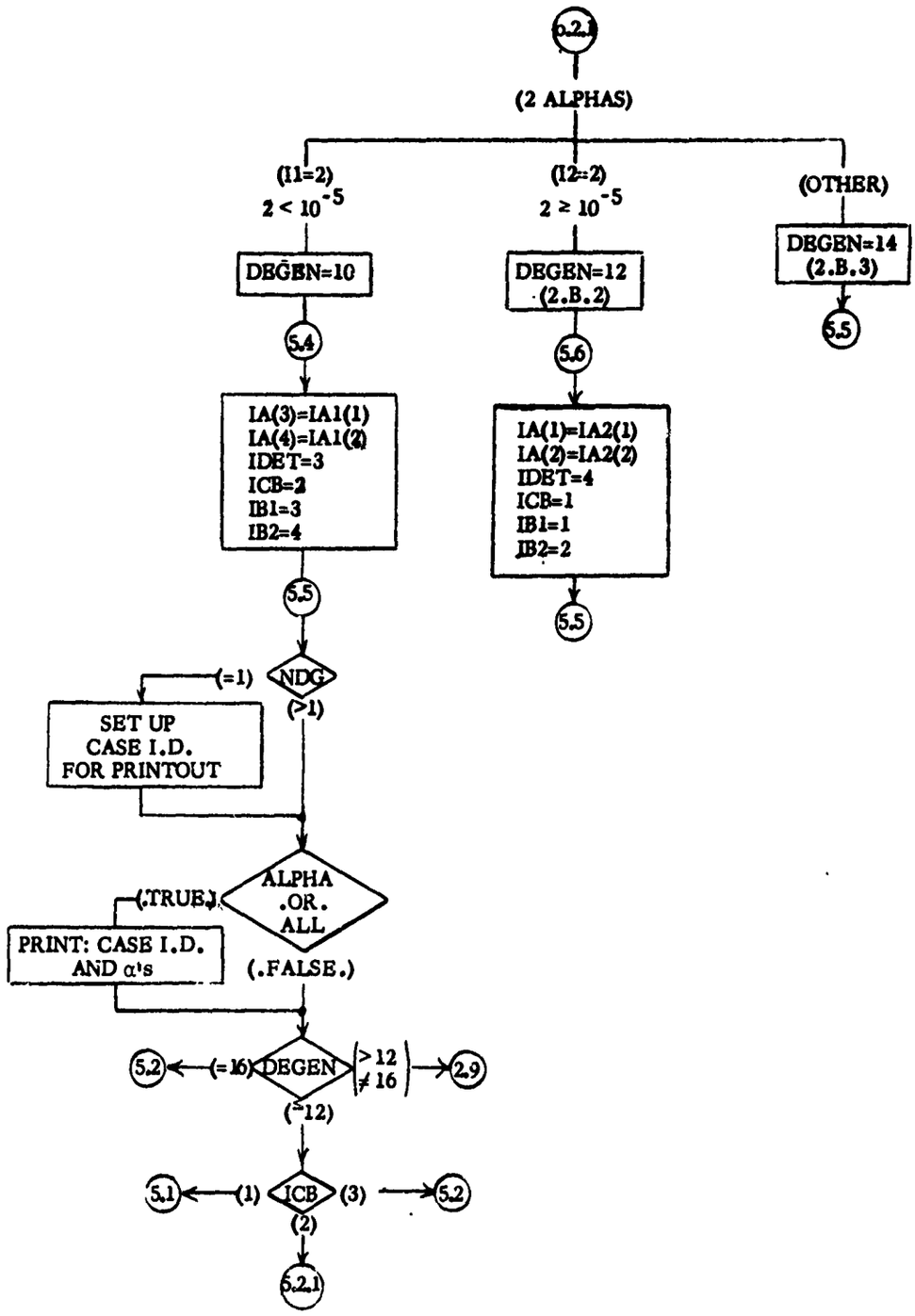
6.2.1
(2 ALPHAS)
(I1=2)
2 < 10^-5
(I2=2)
2 ≥ 10^-5
(OTHER)
DEGEN=10
DEGEN=12
(2.B.2)
DEGEN=14
(2.B.3)
5.4
5.6
5.5
IA(3)=IA1(1)
IA(4)=IA1(2)
IDET=3
ICB=2
IB1=3
IB2=4
IA(1)=IA2(1)
IA(2)=IA2(2)
IDET=4
ICB=1
IB1=1
IB2=2
5.5
5.5
NDG
(=1)
(>1)
SET UP
CASE I.D.
FOR PRINTOUT
ALPHA
.OR.
ALL
(.TRUE.)
(.FALSE.)
PRINT: CASE I.D.
AND α's
5.2
(=16)
DEGEN
> 12
≠ 16
2.9
(≤12)
5.1
(1)
ICB
(3)
5.2
(2)
5.2.1

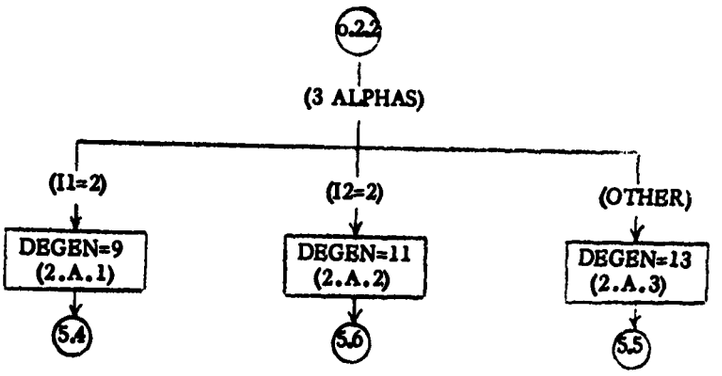
6.2.2
(3 ALPHAS)
(I1=2)
(I2=2)
(OTHER)
DEGEN=9
(2.A.1)
DEGEN=11
(2.A.2)
DEGEN=13
(2.A.3)
5.4
5.6
5.5

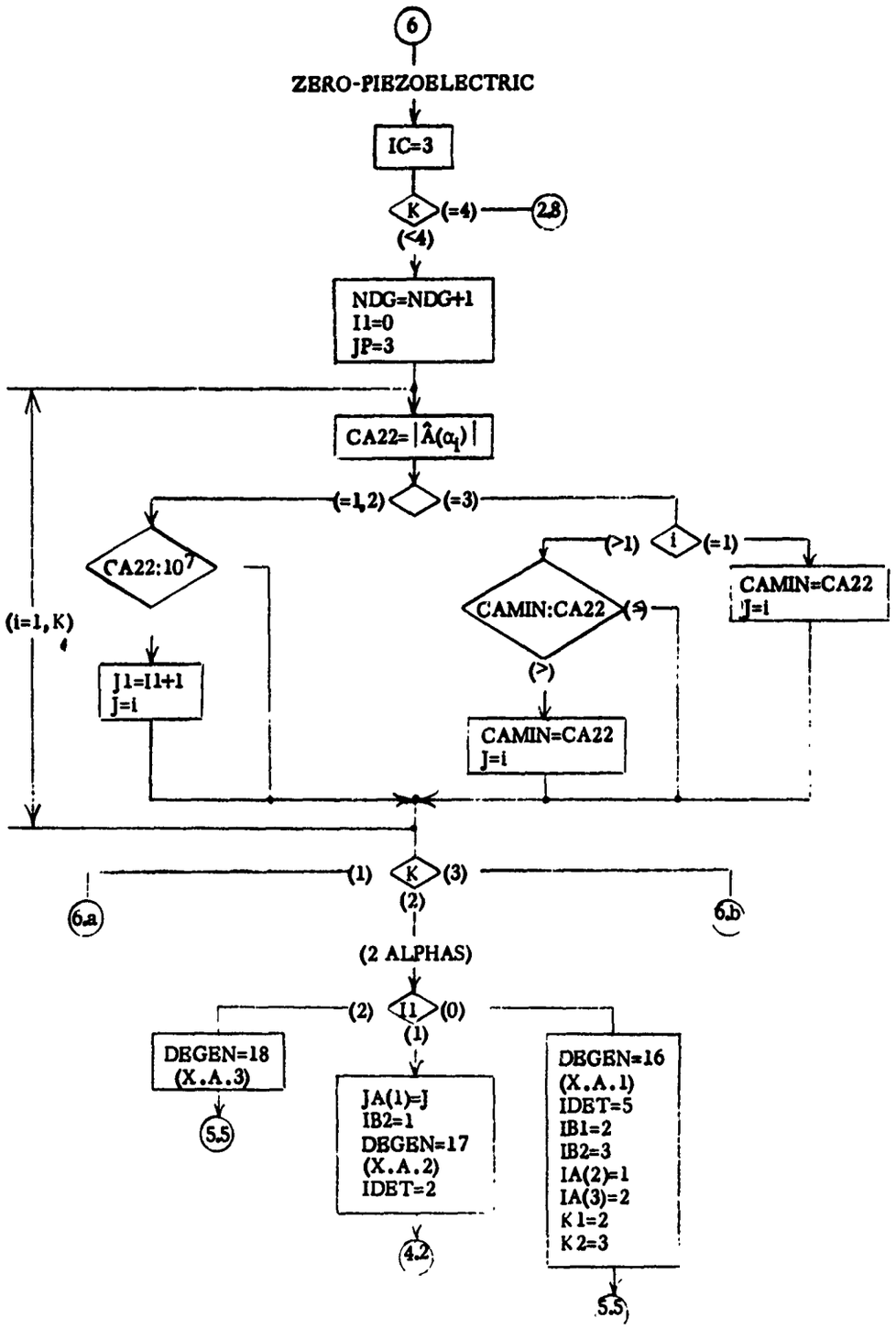
6
ZERO-PIEZOELECTRIC
IC=3
K
(=4)
2.8
(<4)
NDG=NDG+1
I1=0
JP=3
CA22=|Â(α_i)|
(=1,2)
(=3)
CA22:10^7
(i=1,K)
J1=I1+1
J=i
i
(>1)
(=1)
CAMIN:CA22
(≤)
(>)
CAMIN=CA22
J=i
CAMIN=CA22
J=i
K
(1)
(3)
(2)
6.a
6.b
(2 ALPHAS)
I1
(2)
(0)
(1)
DEGEN=18
(X.A.3)
5.5
JA(1)=J
IB2=1
DEGEN=17
(X.A.2)
IDET=2
4.2
DEGEN=16
(X.A.1)
IDET=5
IB1=2
IB2=3
IA(2)=1
IA(3)=2
K1=2
K2=3
5.5

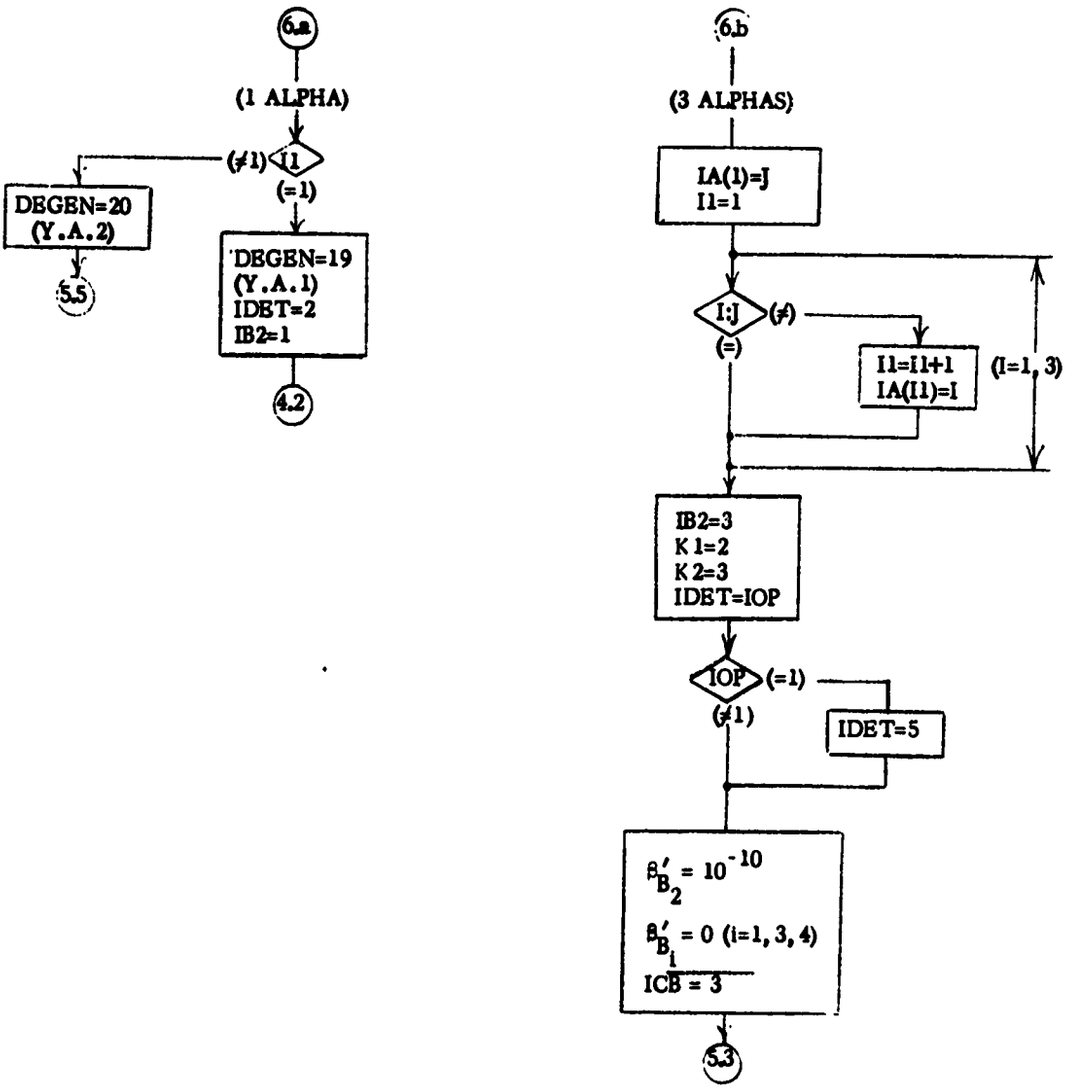
6.a
(1 ALPHA)
I1
(≠1)
(=1)
DEGEN=20
(Y.A.2)
5.5
DEGEN=19
(Y.A.1)
IDET=2
IB2=1
4.2
6.b
(3 ALPHAS)
IA(1)=J
I1=1
I:J
(≠)
(=)
I1=I1+1
IA(I1)=I
(I=1, 3)
IB2=3
K 1=2
K 2=3
IDET=IOP
IOP
(=1)
(≠1)
IDET=5
$\beta'_{B_2} = 10^{-10}$
$\beta'_{B_i} = 0$ (i=1, 3, 4)
ICB = 3
5.3

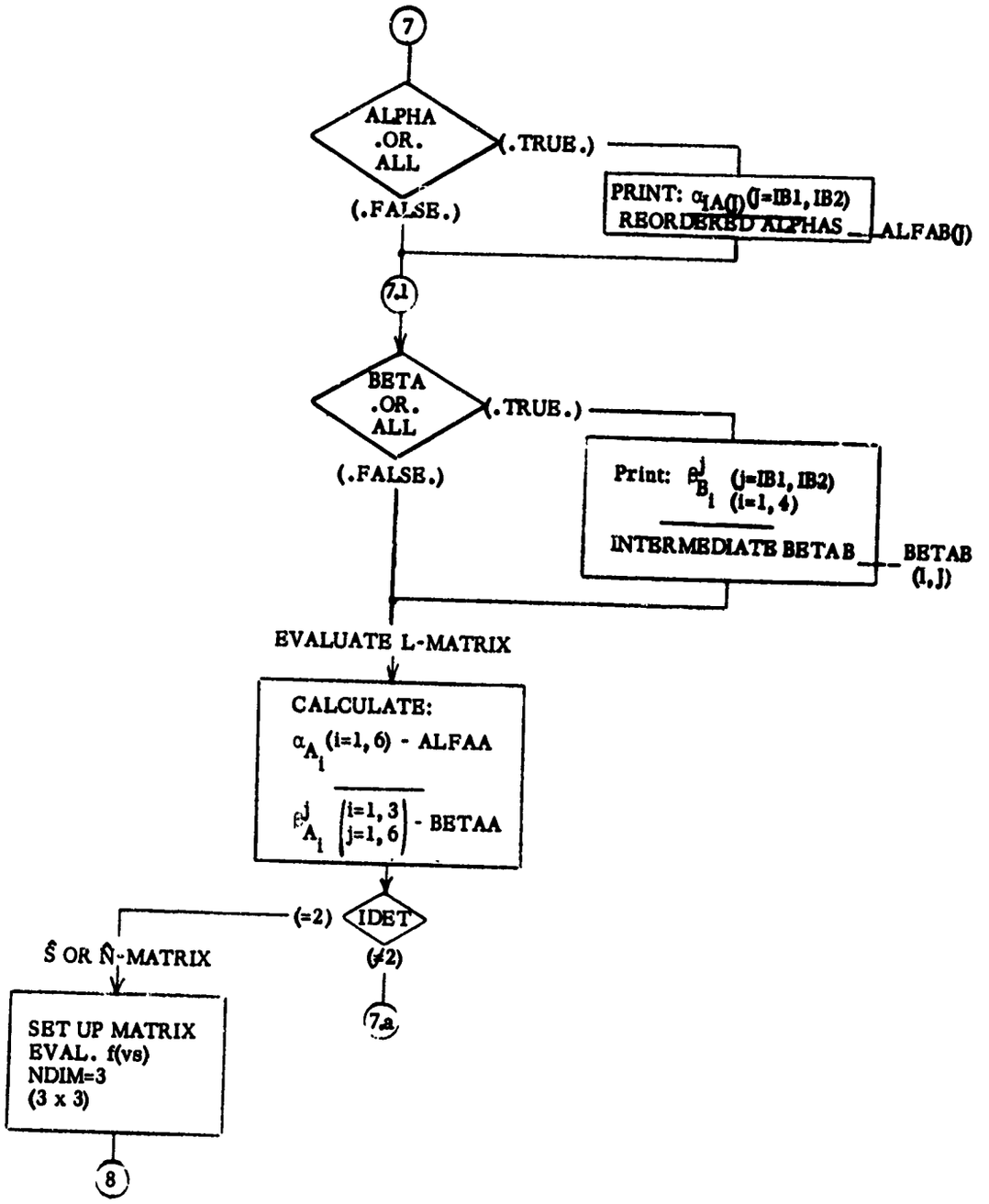
7
ALPHA .OR. ALL
(.TRUE.)
(.FALSE.)
PRINT: $\alpha_{1A(j)}$ (j=IB1, IB2)
REORDERED ALPHAS
ALFAB(j)
7.1
BETA .OR. ALL
(.TRUE.)
(.FALSE.)
Print: $\beta^j_{B_i}$ (j=IB1, IB2) (i=1, 4)
INTERMEDIATE BETAB
BETAB (I, J)
EVALUATE L-MATRIX
CALCULATE:
α_{A_i} (i=1, 6) - ALFAA
$\beta^j_{A_i}$ (i=1, 3; j=1, 6) - BETAA
IDET
(=2)
(≠2)
Ŝ OR N̂-MATRIX
SET UP MATRIX
EVAL. f(vs)
NDIM=3
(3 x 3)
7a
8

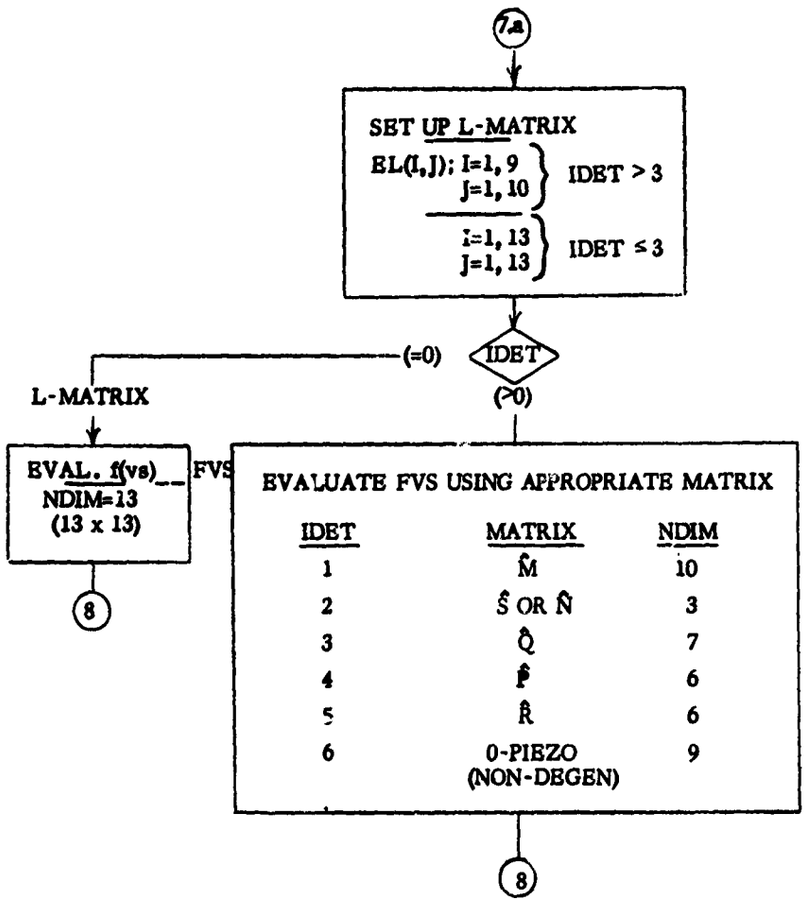
7a
SET UP L-MATRIX
EL(I,J); I=1, 9
J=1, 10
IDET > 3
I=1, 13
J=1, 13
IDET ≤ 3
IDET
(=0)
(>0)
L-MATRIX
EVAL. f(vs)
NDIM=13
(13 x 13)
FVS
8
EVALUATE FVS USING APPROPRIATE MATRIX
IDET MATRIX NDIM
1 M̂ 10
2 Ŝ OR N̂ 3
3 Q̂ 7
4 P̂ 6
5 R̂ 6
6 0-PIEZO (NON-DEGEN) 9
8

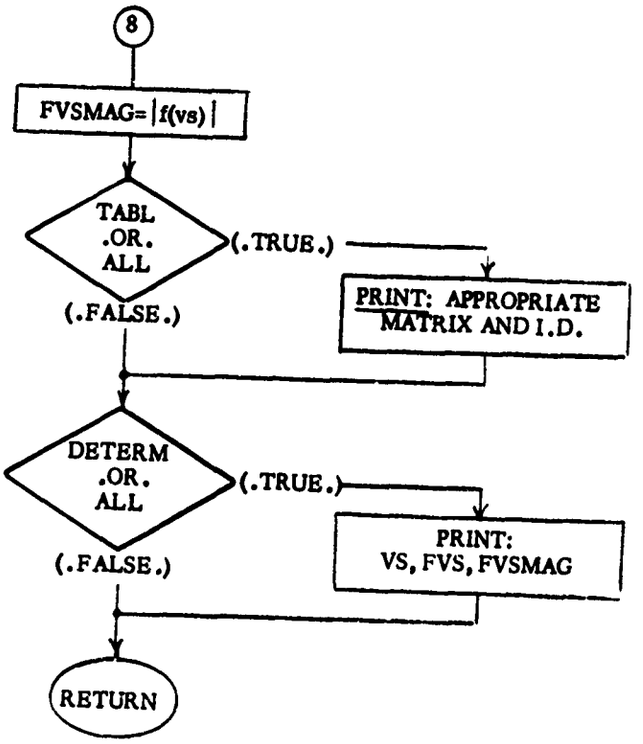
8
FVSMAG=|f(vs)|
TABL
.OR.
ALL
(.TRUE.)
(.FALSE.)
PRINT: APPROPRIATE
MATRIX AND I.D.
DETERM
.OR.
ALL
(.TRUE.)
(.FALSE.)
PRINT:
VS, FVS, FVSMAG
RETURN

APPENDIX I. ELEMENTS OF THE $\hat{L}$ MATRIX FOR THE ELASTIC-CONDUCTOR PIEZOELECTRIC SUBSTRATE PROBLEM

The subscript p corresponds to the piezoelectric medium while the subscript c corresponds to the conducting elastic medium. The C_{ij}'s and e_{ij}'s correspond to the piezoelectric medium while λ, μ correspond to the conductor (Lame's constants). The expressions for $\alpha_c^{(j)}$ are easily obtainable from equation (20) and are as follows

$$\alpha_c^{(1,2)} = \pm\sqrt{\frac{\mu - \rho_c v_s^2}{\mu}} = \alpha_c^{(5,6)}$$

$$\alpha_c^{(3,4)} = \pm\sqrt{\frac{2\mu + \lambda - \rho_c v_s^2}{2\mu + \lambda}} \quad .$$

The elements of the 10 x 10 boundary value determinant are as follows:

$$L_{i\ell} = \beta_{ci}^{(\ell)} \; [i = 1,2,3 \;\; \ell = 1,2,\ldots,6]$$

$$L_{i\ell} = -\beta_{pi}^{(\ell-6)} \; [i = 1,2,3 \qquad \ell = 7,8,9,10]$$

$$L_{4\ell} = \beta_{c1}^{(\ell)}\alpha_c^{(\ell)}\mu + j\,\beta_{c3}^{(\ell)}\mu \quad [\ell = 1,2,\ldots,6]$$

$$L_{4\ell} = -\beta_{p1}^{(\ell-6)} \; [j\,C_{15} + \alpha_p^{(\ell-6)}\,C_{55}] - \beta_{p2}^{(\ell-6)} \; [j\,C_{56} + \alpha_p^{(\ell-6)}\,C_{45}]$$

$$- \beta_{p3}^{(\ell-6)} \; [j\,C_{55} + \alpha_p^{(\ell-6)}\,C_{35}] - \beta_{p4}^{(\ell-6)} \; [j\,e_{15} + \alpha_p^{(\ell-6)}\,e_{35}] \quad [\ell = 7,8,9,10]$$

$$L_{5\ell} = \beta_{c2}^{(\ell)}\alpha_c^{(\ell)}\mu \; [\ell = 1,2,\ldots,6]$$

$$L_{5\ell} = -\beta_{p1}^{(\ell-6)} \; [j\,C_{14} + \alpha_p^{(\ell-6)}\,C_{45}] - \beta_{p2}^{(\ell-6)} \; [j\,C_{46} + \alpha_p^{(\ell-6)}\,C_{44}]$$

$$- \beta_{p3}^{(\ell-6)} \; [j\,C_{45} + \alpha_p^{(\ell-6)}\,C_{34}] - \beta_{p4}^{(\ell-6)} \; [j\,e_{14} + \alpha_p^{(\ell-6)}\,e_{34}] \quad [\ell = 7,8,9,10]$$

$$L_{6\ell} = j\,\beta_{c1}^{(\ell)}\,\lambda + \beta_{c3}^{(\ell)}\,\alpha_c^{(\ell)}\,(2\mu + \lambda) \quad [\ell = 1, 2, \ldots, 6]$$

$$L_{6\ell} = -\,\beta_{p1}^{(\ell-6)}\,[j\,C_{13} + \alpha_p^{(\ell-6)}\,C_{35}] - \beta_{p2}^{(\ell-6)}\,[j\,C_{36} + \alpha_p^{(\ell-6)}\,C_{34}]$$

$$-\,\beta_{p3}^{(\ell-6)}\,[j\,C_{35} + \alpha_p^{(\ell-6)}\,C_{33}] - \beta_{p4}^{(\ell)}\,[j\,e_{13} + \alpha_p^{(\ell-6)}\,e_{33}] \quad [\ell = 7, 8, 9, 10]$$

$$L_{7\ell} = L_{4\ell}\,e^{\alpha_c^{(\ell)}\,\omega h/v_s} \quad [\ell = 1, 2, \ldots, 6]$$

$$L_{7\ell} = 0 \quad [\ell = 7, 8, 9, 10]$$

$$L_{8\ell} = L_{5\ell}\,e^{\alpha_c^{(\ell)}\,\omega h/v_s} \quad [\ell = 1, 2, \ldots, 6]$$

$$L_{8\ell} = 0 \quad [\ell = 7, 8, 9, 10]$$

$$L_{9\ell} = L_{6\ell}\,e^{\alpha_c^{(\ell)}\,\omega h/v_s} \quad [\ell = 1, 2, \ldots, 6]$$

$$L_{9\ell} = 0 \quad [\ell = 7, 8, 9, 10]$$

$$L_{10\ell} = 0 \quad [\ell = 1, 2, \ldots, 6]$$

$$L_{10\ell} = \beta_{p4}^{(\ell-6)} \quad [\ell = 7, 8, 9, 10]$$

APPENDIX II. EXPLICIT FORMS OF THE ELEMENTS OF THE MATRIX M ASSOCIATED WITH THE FLUID MEDIUM PIEZOELECTRIC SUBSTRATE PROBLEM

$$M_{1\ell} = \beta_3^{(\ell)} \cdot 10^{10} , \qquad \ell = 1,2,3,4,$$

$$M_{15} = 0 ,$$

$$M_{16} = -1 ;$$

$$M_{2\ell} = \beta_4^{(\ell)} , \qquad \ell = 1,2,3,4$$

$$M_{25} = -1 ,$$

$$M_{26} = 0 ;$$

$$M_{3\ell} = [\beta_1^{(\ell)}(je_{31} + \alpha_c^{(\ell)} e_{35}) + \beta_2^{(\ell)} (je_{36} + \alpha_c^{(\ell)} e_{34}) + \beta_3^{(\ell)} (je_{35} + \alpha_c^{(\ell)} e_{33}) - \beta_4^{(\ell)} (j\varepsilon_{13} + \alpha_c^{(\ell)} \varepsilon_{33})] \cdot 10^{10} ,$$

$$\ell = 1,2,3,4$$

$$M_{35} = -\varepsilon_\ell \cdot 10^{10} ,$$

$$M_{36} = 0 ;$$

$$M_{4\ell} = \beta_1^{(\ell)}(jC_{13} + \alpha_c^{(\ell)} C_{35}) + \beta_2^{(\ell)} (jC_{36} + \alpha_c^{(\ell)} C_{34}) + \beta_3^{(\ell)} (jC_{35} + \alpha_c^{(\ell)} C_{33}) + \beta_4^{(\ell)} (je_{13} + \alpha_c^{(\ell)} e_{33}) ,$$

$$\ell = 1,2,3,4 ,$$

$$M_{45} = 0 ,$$

$$M_{46} = \frac{\rho_\ell v_s^2}{\alpha_\ell} \cdot 10^{-10} ;$$

$$M_{5\ell} = \beta_1^{(\ell)}(jC_{15} + \alpha_c^{(\ell)}C_{55}) + \beta_2^{(\ell)}(jC_{56} + \alpha_c^{(\ell)}C_{45})$$

$$+ \beta_3^{(\ell)}(jC_{55} + \alpha_c^{(\ell)}C_{35}) + \beta_4^{(\ell)}(je_{15} + \alpha_c^{(\ell)}e_{35}) ,$$

$$\ell = 1, 2, 3, 4 ,$$

$$M_{55} = M_{56} = 0 ;$$

$$M_{6\ell} = \beta_1^{(\ell)}(jC_{14} + \alpha_c^{(\ell)}C_{45}) + \beta_2^{(\ell)}(jC_{46} + \alpha_c^{(\ell)}C_{44})$$

$$+ \beta_3^{(\ell)}(jC_{45} + \alpha_c^{(\ell)}C_{34}) + \beta_4^{(\ell)}(je_{14} + \alpha_c^{(\ell)}e_{34}) ,$$

$$\ell = 1, 2, 3, 4 ,$$

$$M_{65} = M_{66} = 0 .$$

The factors 10^{10} and 10^{-10} are introduced to make the real and imaginary parts of all elements of the matrix on the order of unity.

APPENDIX III. ELEMENTS OF THE $\hat{L}$ MATRIX FOR THE ELASTIC LAYER PIEZOELECTRIC SUBSTRATE PROBLEM

$$L_{i\ell} = \beta_{di}^{(\ell)} \cdot 10^{10} \quad [i=1,2,3 \;\; \ell = 1,2,\ldots,6]$$

$$L_{i\ell} = -\beta_{ci}^{(\ell-6)} \cdot 10^{10} \quad [i=1,2,3 \;\; \ell=7,8,9,10]$$

$$L_{i\ell} = 0 \quad [i=1,2,3 \;\; \ell=11,12,13]$$

$$L_{4\ell} = \mu_d \alpha_d^{(\ell)} \beta_{d1}^{(\ell)} + j \mu_d \beta_{d3}^{(\ell)} \qquad [\ell=1,2,\ldots,6]$$

$$L_{4\ell} = -\beta_{c1}^{(\ell-6)} [j c_{15} + \alpha_c^{(\ell-6)} c_{55}] - \beta_{c2}^{(\ell-6)} [j c_{56} + \alpha_c^{(\ell-6)} c_{45}]$$
$$-\beta_{c3}^{(\ell-6)} [j c_{55} + \alpha_c^{(\ell-6)} c_{35}] - \beta_{c4}^{(\ell-6)} [j e_{15} + \alpha_c^{(\ell-6)} e_{35}]$$
$$[\ell = 7,8,9,10]$$

$$L_{4\ell} = 0 \quad [\ell = 11,12,13]$$

$$L_{5\ell} = \mu_d \alpha_d^{(\ell)} \beta_{d2}^{(\ell)} \qquad [\ell = 1,2,\ldots,6]$$

$$L_{5\ell} = -\beta_{c1}^{(\ell-6)} [j c_{14} + \alpha_c^{(\ell-6)} c_{45}] - \beta_{c2}^{(\ell-6)} [j c_{46} + \alpha_c^{(\ell-6)} c_{44}]$$
$$-\beta_{c3}^{(\ell-6)} [j c_{45} + \alpha_c^{(\ell-6)} c_{34}] - \beta_{c4}^{(\ell-6)} [j e_{14} + \alpha_c^{(\ell-6)} e_{34}]$$
$$[\ell = 7,8,9,10]$$

$$L_{5\ell} = 0 \qquad [\ell = 11,12,13]$$

$$L_{6\ell} = j \lambda_d \beta_{d1}^{(\ell)} + (\lambda_d + 2\mu_d) \alpha_d^{(\ell)} \beta_{d3}^{(\ell)} \qquad [\ell = 1,2,\ldots,6]$$

$$L_{6\ell} = -\beta_{c1}^{(\ell-6)} [j c_{13} + \alpha_c^{(\ell-6)} c_{35}] - \beta_{c2}^{(\ell-6)} [j c_{36} + \alpha_c^{(\ell-6)} c^{34}]$$
$$-\beta_{c3}^{(\ell-6)} [j c_{35} + \alpha_c^{(\ell-6)} c_{33}] - \beta_{c4}^{(\ell-6)} [j e_{13} + \alpha_c^{(\ell-6)} e_{33}]$$
$$[\ell = 7,8,9,10]$$

$$L_{6\ell} = 0 \qquad [\ell = 11, 12, 13]$$

$$L_{7\ell} = L_{4\ell}\, e^{\alpha_d^{(\ell)}\, \omega h/v_s} \qquad [\ell = 1, 2, \ldots, 6]$$

$$L_{7\ell} = 0 \qquad [\ell = 7, 8, \ldots, 13]$$

$$L_{8\ell} = L_{5\ell}\, e^{\alpha_d^{(\ell)}\, \omega h/v_s} \qquad [\ell = 1, 2, \ldots, 6]$$

$$L_{8\ell} = 0 \qquad [\ell = 7, 8, \ldots, 13]$$

$$L_{9\ell} = L_{6\ell}\, e^{\alpha_d^{(\ell)}\, \omega h/v_s} \qquad [\ell = 1, 2, \ldots, 6]$$

$$L_{9\ell} = 0 \qquad [\ell = 7, 8, \ldots, 13]$$

$$L_{10\ell} = 0 \qquad [\ell = 1, 2, \ldots, 6]$$

$$L_{10\ell} = \beta_{c4}^{(\ell-6)} \qquad [\ell = 7, 8, 9, 10]$$

$$L_{10\ell} = -1 \qquad [\ell = 11, 12]$$

$$L_{10\ell} = 0 \qquad [\ell = 13]$$

$$L_{11\ell} = 0 \qquad [\ell = 1, 2, \ldots, 10]$$

$$L_{11,11} = e^{-\omega h/v_s}$$

$$L_{11,12} = e^{\omega h/v_s}$$

$$L_{11,13} = -e^{-\omega h/v_s}$$

$$L_{12\ell} = \quad 0 \qquad [\ell = 1, 2, \ldots, 6]$$

$$L_{12\ell} = \left[\beta_{c1}^{(\ell-6)} \; [j\, e_{13} + \alpha_c^{(\ell-6)}\, e_{35}] + \beta_{c2}^{(\ell-6)} \; [j\, e_{36} + \alpha_c^{(\ell-6)}\, e_{34}] \right.$$

$$\left. + \beta_{c3}^{(\ell-6)} \; [j\, e_{35} + \alpha_c^{(\ell-6)}\, e_{33}] - \beta_{c4}^{(\ell-6)} \; [j\, \varepsilon_{13} + \alpha_c^{(\ell-6)}\, \varepsilon_{33}]\right] \cdot 10^{10}$$

$$\ell = 7, 8, 9, 10$$

$$L_{12,11} = -\varepsilon_d \cdot 10^{10}$$

$$L_{12,12} = \varepsilon_d \cdot 10^{10}$$

$$L_{12,13} = 0$$

$$L_{13,\ell} = 0 \qquad [\ell = 1, 2, \ldots, 10]$$

$$L_{13,11} = e^{-\omega h/v_s}$$

$$L_{13,12} = -e^{\omega h/v_s}$$

$$L_{13,13} = -\frac{\varepsilon_o}{\varepsilon_d}\, e^{-\omega h/v_s}$$

APPENDIX IV. EXPLICIT FORMS OF THE POLYNOMIAL COEFFICIENTS A_k

The elements of the matrix $\hat{A}$ have the general form $\hat{A}_{ik} = a_{ik}\alpha^2 + j\,b_{ik}\alpha + d_{ik}$ where a_{ik}, b_{ik}, and d_{ik} are easily deduced from equation (6). Therefore, the determinant of $\hat{A}$ can be expressed as the polynomial

$$A_1\alpha^8 + jA_2\alpha^7 + A_3\alpha^6 + jA_4\alpha^5 + A_5\alpha^4 + jA_6\alpha^3 + A_7\alpha^2 + jA_8\alpha + A_9$$

with coefficients

$$A_1 = \sum_{\{j,k,\ell,m\}} (-1)^h H_{jk\ell} S_m$$

$$A_2 = \sum_{\{j,k,\ell,m\}} (-1)^h [H_{jk\ell} \bar{U}_m + I_{jk\ell} S_m]$$

$$A_3 = \sum_{\{j,k,\ell,m\}} (-1)^h [H_{jk\ell} V_m - I_{jk\ell} \bar{U}_m + J_{jk\ell} S_m]$$

$$A_4 = \sum_{\{j,k,\ell,m\}} (-1)^h [I_{jk\ell} V_m + J_{jk\ell} \bar{U}_m + K_{jk\ell} S_m]$$

$$A_5 = \sum_{\{j,k,\ell,m\}} (-1)^h [J_{jk\ell} V_m - K_{jk\ell} \bar{U}_m + L_{jk\ell} S_m]$$

$$A_6 = \sum_{\{j,k,\ell,m\}} (-1)^h [K_{jk\ell} V_m + L_{jk\ell} \bar{U}_m + M_{jk\ell} S_m]$$

$$A_7 = \sum_{\{j,k,\ell,m\}} (-1)^h [L_{jk\ell} V_m - M_{jk\ell} \bar{U}_m + N_{jk\ell} S_m]$$

$$A_8 = \sum_{\{j,k,\ell,m\}} (-1)^h [M_{jk\ell} V_m + N_{jk\ell} \bar{U}_m]$$

$$A_9 = \sum_{\{j,k,\ell,m\}} (-1)^h N_{jk\ell} V_m \quad .$$

$\sum_{\{j,k,\ell,m\}}$ refers to a sum over all permutations of 1, 2, 3, 4. There are 24 terms in each sum. h is the number of interchanges for each term necessary to to return the indices to the order 1, 2, 3, 4; and

$$H_{jk\ell} = a_{1j}\, a_{2k}\, a_{3\ell}$$

$$I_{jk\ell} = a_{1j}\, a_{2k}\, b_{3\ell} + (a_{1j}\, b_{2k} + b_{1j}\, a_{2k})\, a_{3\ell}$$

$$J_{jk\ell} = a_{1j}\, a_{2k}\, d_{3\ell} - (a_{1j}\, b_{2k} + b_{1j}\, a_{2k})\, b_{3\ell} + (a_{1j}\, d_{2k} - b_{1j}\, b_{2k} + d_{1j}\, a_{2k})\, a_{3\ell}$$

$$K_{jk\ell} = (a_{1j}\, b_{2k} + b_{1j}\, a_{2k})\, d_{3\ell} - (a_{1j}\, b_{2k} + b_{1j}\, a_{2k})\, b_{3\ell} + (b_{1j}\, d_{2k} + d_{1j}\, b_{2k})\, a_{3\ell}$$

$$L_{jk\ell} = (a_{1j}\, d_{2k} - b_{1j}\, b_{2k} + d_{1j}\, a_{2k})\, d_{3\ell} - (b_{1j}\, d_{2k} + d_{1j}\, b_{2k})\, b_{3\ell} + d_{1j}\, d_{2k}\, a_{3\ell}$$

$$M_{jk\ell} = (b_{1j}\, d_{2k} + d_{1j}\, b_{2k})\, d_{3\ell} + d_{1j}\, d_{2k}\, b_{3\ell}$$

$$N_{jk\ell} = d_{1j}\, d_{2k}\, d_{3\ell}$$

$$S_m = a_{4m}$$

$$\bar{U}_m = b_{4m}$$

$$V_n = d_{4m}$$

APPENDIX V. COMPUTER PROGRAMS

```
                    CONWAY      PHASE          N4.                    12/31/69    000109      PAGE  1

$ID    * 1614 N4CONWAY      PHASE          N4                  000109      112244      12/31/69          000109
$TCP            TIME=3,PAGES=20,DUMP
$SETUP L84      CRTPLT
$ALL            CONTINUE
$IBSYS
 RETURNING TO IBSYS.
$IBJOB          DEBUG
$IBFTC LINBO3   DECK,DEBUG

CLINBC3                                                                  MAIN0020
C*                  GOLD LITHIUM AND LITHIUM NIOBATE                     MAIN0030
C*                                                                       MAIN0040
C*********************************************************************   MAIN0050
                                                                         MAIN0060
      DIMENSION PANGLE(181)
      DIMENSION XX(2),YY(2)
      DIMENSION DELTA(181)
      DIMENSION RT11(181),RIT11(181),RU1(181),RIU1(181),RE1(181)
      DIMENSION REI1(181)
      DIMENSION DETRAY(100),DETIAY(100),VSARAY(100),AAAAA(200)
      COMPLEX DISP(4)
      INTEGER BLIMIT,ELIMIT
      LOGICAL ROTATE
      LOGICAL GETOUT
      LOGICAL NEGAT
      LOGICAL MUIT
      LOGICAL ICHECK
       COMMON /ROTAT/ ROTATE
      COMMON /GET/GETOUT
      COMMON /PLOTS/ICHECK
      DATA XX/0.,10./,YY/5.,5./
      DIMENSION  DEG(181), TITLES(4)
      DIMENSION  VELOC(181), VELOCI(181), VEL(362)
      COMMON/OVR/KO,NI
      COMMON /ZZTZ/ CC(20),CE(17),CT(5)
      COMMON     /LINK/  ALFA(8), ALFAI(8), EL(100), ALFAA(6),          MAIN0080
     .                   ALFAB(4), BETAA(3,6), BETAB(4,4), EPSO,        MAIN0090
     .                   MUA, LAMDAA, RHOA, MUB, LAMDAB, NUB, RHOB,     MAIN0100
     .                   VS, KS, EPSLON, DIGIT, WH, WXA, WXB, KL,       MAIN0110
     .                   KM, ALL, ROOTS, ITER, COEFF, DETERM, POLY,     MAIN0120
     .                   ALPHA, BETA, MAX                               MAIN0130
      COMMON     /GPEPS/ G(21), P(18), EPS(9)                           MAIN0140
      COMMON     /FLAG/  ONCE    /BETAN/  NBETA                         MAIN0150
     .            /CSET/ CLIM, ELIM, TLIM                                MAIN0160
      COMMON     /FROOT/ FVSMAG, NT, ICASE                              MAIN0170
     .             /COM/   ACAP, EPSR                                   MAIN0180
     .             /CIA/   IA(4)                                        MAIN0190
     .           /ALESS/ IALF                                           MAIN0195
     .      /CIFL/ MXAGNL
      INTEGER    PLOTIT(6)
      COMPLEX      XEL(3,3), FXL, XL(2,3), XET(2)                       MAIN0200
      COMPLEX    ALFA, FVS, EL, EA(6), EB(4), UA(3), UB(3), ALFAI,      MAIN0210
     .           ALFAA, ALFAB, BETAA, BETAB, ETA(10), PHIB              MAIN0220
      COMPLEX      CXO, CX1                                             MAIN0230
      COMPLEX    TFUN, P1FUN, U, EX(4), P1M, P2M,                       MAIN0240
     .           TW31, TW32, TW33, TW11, TW12, TW22, S11, S22, S33,     MAIN0250
     .           S12, S13, S23, C1, D2, D3, JIMAG, E1, E3               MAIN0260
      REAL       MUA, LAMDAA, MUB, LAMDAB, NUA, NUB,                    MAIN0270
     .           MAGU(4), PHASEU(4), NUMAX, TITLE(4)                    MAIN0280
      LOGICAL    ALL, ROOTS, COEFF, DETERM, POLY, ALPHA, BETA,          MAIN0290
```

```
     .          ICHECK, ACAP, IALF,                                    MAIN0300
     . HXAGNL,
     .          REPEAT, ONCE                                           MAIN0310
                LIN803   CONWAY      PHASE            N4                      12/31/69    000109      PAGE  1
          LIN803     -  EFN   SOURCE STATEMENT  -  IFN(S)  -

      EQUIVALENCE ( VEL(1), VELOC(1) ), ( VELOCI(1), VEL(182) )
      EQUIVALENCE ( TITLE, TITLES(1) )
      EQUIVALENCE (CC(1), C11), (CC(2), C13), (CC(3), C14), (CC(4),C15),MAIN0320
     .            (CC(5), C33), (CC(6), C34), (CC(7), C35), (CC(8),C36),MAIN0330
     .            (CC(9), C44), (CC(10),C45), (CC(11),C46),             MAIN0340
     .            (CC(12),C55), (CC(13),C56), (CC(14),C66),             MAIN0350
     .            (CC(15),C16), (CE(1), E11), (CE(2), E13),             MAIN0360
     .            (CE(3), E14), (CE(4), E15), (CE(5), E16),             MAINC370
     .            (CE(6), E31), (CE(7), E33), (CE(8), E34),             MAIN0380
     .            (CE(9), E35), (CE(10),E36), (CT(1), T11),             MAIN0390
     .            (CT(2), T13), (CT(3), T33)                            MAIN0400
      EQUIVALENCE (CC(16),C12), (CC(17),C25), (CC(18),C26),             MAIN0410
     .            (CC(19),C24), (CC(20),C23), (CE(11),E12),             MAIN0420
     .            (CE(12),E32), (CE(13),E21), (CE(14),E23),             MAIN0430
     .            (CE(15),E24), (CE(16),E25), (CE(17),E26),             MAIN0440
     .            (CT(4), T21), (CT(5), T23)                            MAIN0450
                                                                        MAIN0460
      NAMELIST   /INPUT/ MUA, LAMDAA, RHOA, MLB, LAMDAB, NUB, RHOB,     MAIN0470
     .                   VS, KS, EPSLON, WH, WXA, WXB, EPSR,            MAIN0480
     . NEGAT,
     . HXAGNL,
     .                   KL, KM, ALL, ROOTS, COEFF, DETERM,             MAIN0490
     .                   POLY, ALPHA, BETA, MAX, EPSO, WX, REPEAT,      MAIN0500
     .                   ICHECK, DVS, VSMAX, ACAP, CLIM, ELIM, TLIM,    MAIN0510
     .                   DNU, NUMAX, DWX, WXMAX, TITLE                  MAIN0520
     . ,MLIT,ROTATE
      NAMELIST   /CONST/ G, P, EPS                                      MAIN0530
                                                                        MAIN0540
                                                                        MAIN0550
      DATA         CX0,CX1/(0.,0.),(1.,0.)/                             MAIN0560
      DATA        TT31,  TT32,  TT33,  TT11,  TT12,  TT22 /             MAIN0570
     .           3HT31, 3HT32, 3HT33, 3HT11, 3HT12, 3HT22 /             MAIN0580
      DATA        SS11,  SS22,  SS33,  SS12,  SS13,  SS23 /             MAIN0590
     .           3HS11, 3HS22, 3HS33, 3HS12, 3HS13, 3HS23 /             MAIN0600
      DATA        DD1,  DD2,  DD3,  UU1,  UU2,  UU3 /                   MAIN0610
     .           2HD1, 2HD2, 2HD3, 2HU1, 2HU2, 2HU3 /                   MAIN0620
      DATA        PP1M, PP2M / 3HP1M, 3HP2M /                           MAIN0630
      DATA       EE1, EE3, JIMAG / 2HE1, 2HE3, (0.,1.) /                MAIN0640
      DATA       TITLE(1) / 24HLITHIUM NIOBATE          /               MAIN0650
                                                                        MAIN0660
                                                                        MAIN0670
      READ(5,7773) JJJK                                                      1
 7773 FORMAT(I2)
      IF(JJJK.EQ.0) GO TO 7774
      CALL SKFILE(2,JJJK)                                                    6
 7774 CONTINUE
      DO 20 I=1,181
   20 DEG(I) = I-1
      CALL CRTPLT(1.0)                                                      15
      CALL PLOT(0.,-.25,-3)                                                 17
      CLIM   = 1.E5                                                     MAIN0680
      ELIM   = 1.E-5                                                    MAIN0690
      TLIM   = 1.E-15                                                   MAIN0700
      EPSLON = 1.E-11                                                   MAIN0710
      EPSC   = 8.85E-12                                                 MAIN0720
      EPSR   = 1.                                                       MAIN0730
```

```
                                                        MAIN0730
      RHOA   = 1.888E4                                  MAIN0740
      MUA    = 2.85E10                                  MAIN0750
      LAMDAA = 1.5E11                                   MAIN0760
      VSAVE  = 3000.                                    MAIN0770
      DVS    = 0.                                       MAIN0780
      VSMAX  = 0.                                       MAIN0790
      DIGIT  = 3.0                                      MAIN0800
      NUMAX  = 0.                                       MAIN0810
      DNU    = 0.                                       MAIN0820
      WXMAX  = 0.                                       MAIN0830
      DWX    = 0.                                       MAIN0840
                                                        MAIN0850
      KL     = 0                                        MAIN0860
      KM     = 0                                        MAIN0870
      MAX=25
      ALL    = .FALSE.                                  MAIN0890
      ROOTS  = .FALSE.                                  MAIN0900
      COEFF  = .FALSE.                                  MAIN0920
      DETERM = .FALSE.                                  MAIN0930
      NEGAT=.FALSE.
      POLY   = .FALSE.                                  MAIN0940
      ALPHA  = .FALSE.                                  MAIN0950
      BETA   = .FALSE.                                  MAIN0960
      ICHECK = .FALSE.                                  MAIN0970
      ACAP   = .FALSE.                                  MAIN0980
      HXAGNL=.FALSE.
      GETCUT =.FALSE.
      MUIT=.FALSE.
      ROTATE=.FALSE.
                                                        MAIN0990
C.....I N P U T    D A T A.....                         MAIN1000
  510 READ (5, CONST)                                   MAIN1020    22
    1 FORMAT( 4A6 )
      READ(5,1) ( TITLES(I), I=1,4 )                              23
      KCUNT = 0
      KONT=0
      KNT1=0
      KNT2=0
      KNT3=0
      REPEAT = .FALSE.                                  MAIN1030
  520 VS = VSAVE                                        MAIN1040
      KTIME = 0                                         MAIN1050
      READ (5, INPUT)                                   MAIN1060    36
      SNU = NUB                                         MAIN1080
      SWX = WX                                          MAIN1090
      READ(5,7) (PLOTIT(I),I=1,6)                                 38
    7 FORMAT(6I2)
  530 KTIME = KTIME + 1                                 MAIN1100
      IF (KTIME .LE. 2)  GO TO 535                      MAIN1110
      COA = (VS1 - VS2)/(AN1 - AN2)                     MAIN1120
      COB = VS1 - COA*AN1                               MAIN1130
      VS  = COA*NUB + COB                               MAIN1140
  535 VSAVE = VS                                        MAIN1150
      ONCE  = .TRUE.                                    MAIN1160
                                                        MAIN1170
```

```
C.....CALCULATE COEFFICIENTS.....                                    MAIN1180
      CALL SETCTE (MUB, NUB, LAMDAB, COEFF .OR. ALL)                 MAIN1190    53
      IF(ICHECK) GO TO 2
                                                                     MAIN1200
C.....CALCULATE ROOT AND OUTPUT RESULTS.....                         MAIN1210
      VSO = VS                                                       MAIN1220
      NT = 0                                                         MAIN1230
  550 CONTINUE                                                       MAIN1240
      CALL ROOT(VSO,VS,N,FVS,EPSLON,MAX,*550)                                59
      IF(GETOUT) GO TO 17
      IF( PLOTIT(1) .EQ. 0 ) GO TO 32
      KCUNT = KOUNT + 1
      VEL(KOUNT) = VS
   32 CONTINUE
      VS1 = VS2                                                      MAIN1260
      VS2 = VS                                                       MAIN1270
      AN1 = AN2                                                      MAIN1280
      AN2 = NUB                                                      MAIN1290
      VSI = 1./VS                                                    MAIN1300
      DO 615 I = 1, 8                                                MAIN1310
  615 ALFAI(I) = ALFA(I)/VS                                          MAIN1320
      WRITE  (6, 650)  KS, TITLE,  EPSLON,                           MAIN1330
     .                 KL, KM, MAX, N, MUB, LAMDAB, NUB, LAMDAA, MUA,  MAIN1340
     .                 RHOA, RHOB, WH, VSO, VS, VSI, FVS,              MAIN1350
     .                 (ALFA(I), ALFAI(I), I = 1, 8)                   MAIN1360    78
      PUNCH 1500,LAMDAB,NUB,NLB                                              87
 1500 FORMAT(3F5.1)
      PUNCH 1502,VS,VSI,(ALFA(I),I=1,8)                                      88
      WRITE  (2, 650)  KS, TITLE,  EPSLON,                           MAIN1330
     .                 KL, KM, MAX, N, MUB, LAMDAB, NUB, LAMDAA, MUA,  MAIN1340
     .                 RHOA, RHOB, WH, VSO, VS, VSI, FVS,              MAIN1350
     .                 (ALFA(I), ALFAI(I), I = 1, 8)                   MAIN1360    95
  650 FORMAT (1H1,20X,4HKS =,I2,5X, 4A6                 /1H0,6X,      MAIN1370
     . 8HEPSLON =,E15.7,3X,32HCLOSENESS OF DETERMINANT TO ZERO/1H ,6X,  MAIN1380
     . 2HKL,5X,1H=,I3,15X,34HO = COMPUTE FOURTH ROW OF L MATRIX/1H ,    MAIN1390
     . 32X,22H1 = SET FOURTH ROW = 1/1H ,6X,2HKM,5X,1H=,I3,15X,         MAIN1400
     . 25HO = ELECTRIC FIELD (COTH)/1H ,32X,25H1 = MAGNETIC FIELD (TANH)MAIN1410
     . /1H ,6X,3HMAX,4X,1H=,I3,15X,28HMAXIMUM NUMBER OF ITERATIONS/     MAIN1420
     . 1H ,6X,1HN,6X,1H=,I3,15X,34HNUMBER OF ITERATIONS ACTUALLY USED/  MAIN1430
     . 1H ,6X,8HMU B   =,E15.7,7X,9HLAMDA B =,E15.7/1H ,6X,8HMU B   =,  MAIN1440
     . E15.7,7X,9HLAMDA A =,E15.7/1H ,6X,8HMU A   =,E15.7/1H ,6X,       MAIN1450
     . 8HRHO A  =,E15.7,7X,9HRHO B   =,E15.7/1H ,6X,2HWH,5X,1H=,E15.7/  MAIN1460
     . 1H , 6X,                                                         MAIN1470
     . 8HVS 0   =,E15.7,3X,16HINITIAL VELOCITY/1H0,6X,2HVS,5X,1H=,E15.7,MAIN1480
     . 3X,42HFINAL VELOCITY SUCH THAT F(VS) .LT. EPSLON/1H ,6X,         MAIN1490
     . 8H1/VS   =,                                                      MAIN1500
     . E15.7,3X,13HINVERSE OF VS/1H0,9X,21H..... DETERMINANT = (,E14.7, MAIN1510
     . 1H,,E14.7,7H) ...../1H0,5X,25HFINAL ROOTS OF POLYNOMIAL,16X,     MAIN1520
     . 13HDIVIDED BY VS//(4H   (,E14.7,1H,,E14.7,1H),7X,1H(,E14.7,      MAIN1530
     . 1H,,E14.7,1H)))                                                  MAIN1540
                                                                        MAIN1550
      IF( IALF ) GO TO 1707                                             MAIN1555
      IF( .NOT. ICHECK ) GO TO 660                                      MAIN1560
      IF( VSO .GE. VSMAX ) GO TO 1708                                   MAIN1570
      WRITE(6,1705)                                                     MAIN1580    112
      VSO = VSO + DVS                                                   MAIN1590
```

IF (A(4).EQ XCD)

```
      GO TO 550                                                         MAIN1600
  660 CONTINUE                                                          MAIN1610
      IF (KS .NE. 0)  GO TO 1240                                        MAIN1630
                                                                        MAIN1640
C.....CALCULATE FINAL RESULTS FOR LITHIUM NIOBATE AND OUTPUT RESULTS....MAIN1650
      IF( ICASE .EQ. 0 ) GO TO 1000                                     MAIN1660
      GO TO ( 50, 100, 60, 110, 105 ), ICASE                            MAIN1670
                                                                        MAIN1680
                                                                        MAIN1690
C.....1 ROW, 3 ZERO CASE.....                                           MAIN1700
                                                                        MAIN1710
C.....( 4 ALPHAS ).....                                                 MAIN1720
   50 ETA(1) = CX0                                                      MAIN1730
      ETA(4) = CX1                                                      MAIN1740
      XL(1,1) = EL(5)                                                   MAIN1750
      XL(2,1) = EL(7)                                                   MAIN1760
      XL(1,2) = EL(9)                                                   MAIN1770
      XL(2,2) = EL(11)                                                  MAIN1780
      XL(1,3) = - EL(13)                                                MAIN1790
      XL(2,3) = - EL(15)                                                MAIN1800
      CALL CMATS( XL, XET, 2, 1, $1740 )                                MAIN1810    123
      ETA(2) = XET(1)                                                   MAIN1820
      ETA(3) = XET(2)                                                   MAIN1830
      GO TO 1100                                                        MAIN1840
                                                                        MAIN1850
C.....( 3 ALPHAS ).....                                                 MAIN1860
   60 ETA(3) = CX1                                                      MAIN1870
      ETA(4) = CX0                                                      MAIN1880
      XL(1,1) = EL(1)                                                   MAIN1890
      XL(2,1) = EL(3)                                                   MAIN1900
      XL(1,2) = EL(5)                                                   MAIN1910
      XL(2,2) = EL(7)                                                   MAIN1920
      XL(1,3) = -EL(9)                                                  MAIN1930
      XL(2,3) = -EL(11)                                                 MAIN1940
      CALL CMATS( XL, ETA, 2, 1, $1740 )                                MAIN1950    128
      GO TO 1100                                                        MAIN1960
                                                                        MAIN1970
                                                                        MAIN1980
C.....4 ROWS, 2 ZERO CASE.....                                          MAIN1990
  100 EL1 = CABS( EL(1)*EL(7) - EL(5)*EL(3) )                           MAIN2000    132
      EL2 = CABS( EL(10)*EL(16) - EL(14)*EL(12) )                       MAIN2010    133
      IF( EL1 .LE. EL2 ) GO TO 110                                      MAIN2020
  105 ETA(1) = CX0                                                      MAIN2030
      ETA(2) = CX0                                                      MAIN2040
      ETA(3) = - EL(14) / EL(10)                                        MAIN2050
      ETA(4) = CX1                                                      MAIN2060
      GO TO 1100                                                        MAIN2070
  110 ETA(1) = - EL(5) / EL(1)                                          MAIN2080
      ETA(2) = CX1                                                      MAIN2090
      ETA(3) = CX0                                                      MAIN2100
      ETA(4) = CX0                                                      MAIN2110
      GO TO 1100                                                        MAIN2120
                                                                        MAIN2130
 1000 IF (NBETA .EQ. 3)  GO TO 1010                                     MAIN2140
                                                                        MAIN2150
C.....ZERO - PIEZOELECTRIC CASE.....                                    MAIN2160
```

```
      EL(3) = EL(5)                                                     MAIN2170
      EL(4) = EL(6)                                                     MAIN2180
      EL(5) =-EL(9)                                                     MAIN2190
      EL(6) =-EL(10)                                                    MAIN2200
      GO TO 1095                                                        MAIN2210
                                                                        MAIN2220
1010  EL(4)   = EL(5)                                                   MAIN2230
      EL(5)   = EL(6)                                                   MAIN2240
      EL(6)   = EL(7)                                                   MAIN2250
      EL(7)   = EL(9)                                                   MAIN2260
      EL(8)   = EL(10)                                                  MAIN2270
      EL(9)   = EL(11)                                                  MAIN2280
      EL(10)  =-EL(13)                                                  MAIN2290
      EL(11)  =-EL(14)                                                  MAIN2300
      EL(12)  =-EL(15)                                                  MAIN2310
1095  KGO = 12                                                          MAIN2320
      CALL CMATS  (EL, ETA, NBETA, 1, $1740)                            MAIN2330   148
      ETA(4)       = (0.,0.)                                            MAIN2340
      ETA(NBETA+1) = (1.,0.)                                            MAIN2350
                                                                        MAIN2360
1100  CONTINUE                                                          MAIN2370
      NBETA1 = NBETA + 1                                                MAIN2380
      WRITE  (6, 1120)  (I, ETA(I), I = 1, NBETA1)                      MAIN2390   153
      WRITE  (2, 1120)  (I, ETA(I), I = 1, NBETA1)                      MAIN2390   160
1120  FORMAT (1H1/1H , 17X, 36H***  F I N A L   A N S W E R S  ***/     MAIN2400
     .        1H0, 30X,13HPARTIAL FIELD/1H ,27X,19HRELATIVE AMPLITUDES/ MAIN2410
     .                        /(1H , 17X, I2, 3H  (, E14.7, 1H,,       MAIN2420
     .        E14.7, 1H)))                                              MAIN2430
      PUNCH 1502, (ETA(I),I=1,4)                                        167
      GO TO 1800                                                        MAIN2440
                                                                        MAIN2450
.....CALCULATE FINAL RESULTS FOR GOLD LITHIUM AND OUTPUT RESULTS.....  MAIN2460
1240  M1 = 1                                                            MAIN2470
      K  = 0                                                            MAIN2480
      DO 1310 I = 1, 9                                                  MAIN2490
      M2 = M1 + 8                                                       MAIN2500
      DO 1300 J = M1, M2                                                MAIN2510
      K = K + 1                                                         MAIN2520
1300  EL(K) = EL(J)                                                     MAIN2530
1310  M1 = M1 + 10                                                      MAIN2540
      DO 1340 I = 51, 99                                                MAIN2550
      K  = K + 1                                                        MAIN2560
1340  EL(K) = -EL(I)                                                    MAIN2570
      KGO = 90                                                          MAIN2580
      CALL CMATS  (EL, ETA, 9, 1, $1740)                                MAIN2590   201
      ETA(10) = (1.,0.)                                                 MAIN2600
      DO 1490 I = 1, 3                                                  MAIN2610
      UA(I) = (0.,0.)                                                   MAIN2620
      UB(I) = (0.,0.)                                                   MAIN2630
      DO 1480 J = 1, 6                                                  MAIN2640
      IF (I .GT. 1)  GO TO 1460                                         MAIN2650
      EA(J) = CEXP(-ALFAA(J)*WXA/VS)                                    MAIN2660   215
      IF (J .GT. 4)  GO TO 1460                                         MAIN2670
      EB(J) = CEXP(-ALFAB(J)*WXB/VS)                                    MAIN2680   221
1460  UA(I) = UA(I) + ETA(J)*BETAA(I,J)*EA(J)                           MAIN2690
      IF (J .GT. 4)  GO TO 1480                                         MAIN2700
```

IJ = IA(J) MAIN2675
EB(J)=CEXP(-ALFAB(IJ)*WXB/VS) MAIN2680

```
      UB(I) = UB(I) + ETA(J+6)*BETAA(I,J)*EB(J)                         MAIN2710
 1480 CCNTINUE                                                          MAIN2720
 1490 CCNTINUE                                                          MAIN2730
      PHIB = (0.,0.)                                                    MAIN2740
      CC 1520 J = 1, 4                                                  MAIN2750
 1520 PHIB = PHIB + ETA(J+6)*EB(J)                                      MAIN2760
      WRITE  (6, 1550)  (I, ETA(I), I = 1, 10),                         MAIN2770
     .                  (I, UA(I), UB(I), I = 1, 3), PHIB               MAIN2780     249
 1550 FORMAT (1H0/1H , 17X, 36H***  F I N A L    A N S W E R S  ***/    MAIN2790
     .        1H0, 30X,13HPARTIAL FIELD/1H ,27X,19HRELATIVE AMPLITUDES/ MAIN2800
     .                        /10(1H , 17X, I2, 3H  (, E14.7, 1H,,     MAIN2810
     .        E14.7, 1H)/)/1H , 21X, 2HUA, 32X, 2HUB//                 MAIN2820
     .        3(1H , I6, 3H  (, E14.7, 1H,, E14.7, 4H)  (, E14.7, 1H,, MAIN2830
     .        E14.7, 1H)/)/1H , 24X, 9HPHI B = (, E14.7, 1H,,          MAIN2840
     .        E14.7, 1H))                                               MAIN2850
 1706 WRITE  (6, 1705)                                                  MAIN2860     263
 1705 FCRMAT (1H1)                                                      MAIN2870
      IF(CETOUT) GO TO 17
      IF(NEGAT) NUB=-NUB
      IF(NEGAT) NUMAX=-NUMAX
      IF(NEGAT) NUB=-NUB
      IF( VSO .GE. VSMAX ) GO TO 1706                                   MAIN2880
      VSO = VSO + DVS                                                   MAIN2890
      GC TO 550                                                         MAIN2900
 1707 WRITE(6,1705)                                                     MAIN2905     277
 1706 IF (DNU .EQ. 0.)  GO TO 1710                                      MAIN2910
      IF(MUIT) GO TO 38
      NUB = NUB + DNU                                                   MAIN2920
      IF( NUB .GT. NUMAX ) GO TO 1709                                   MAIN2930
      GC TO 39
   38 NUB=NUB+DNU
      IF(NUB.GT.NUMAX) GO TO 1709
   39 CCNTINUE
      CALL OVERCK                                                       293
      IF(NEGAT) NUB=-NUB
      IF(NEGAT) NUMAX=-NUMAX
      IF(NEGAT) NUB=-NUB
      IF( MAX .NE. 0 ) GO TO 530                                        MAIN2940
      VS = VSAVE                                                        MAIN2950
      GO TO 535                                                         MAIN2960
                                                                        MAIN2970
 1709 NUB = SNU                                                         MAIN2990
 1710 CCNTINUE

C.....INCLUDE PLOT ROUTINES HERE.....
      IF(PLOTIT(1).EQ.2) GC TC 34
      IF(PLOTIT(1).EQ.0) GO TO 34
      CALL SCALE(VEL,10.,KOUNT,1,10.,YMIN,DY)                           313
      IF(.NOT. MUIT)
     1CALL AXIS(0.,0.,24HDIRECTION OF PROPAGATION,24,10.0,0.0,0.,18.0,
     1  10.0)                                                          316
      IF(MUIT) CALL AXIS(0.,0.,25HDIRECTION OF PLATE NORMAL,25,10.,
     1 0.0,18.0,10.0)                                                   319
      CALL AXIS(C.0,0.0,21HSURFACE WAVE VELOCITY,21,10.,90.0,YMIN,DY,
     1  10.0)                                                          321
      CALL AXIS(0.,10.,1H ,1,10.,0.,0.,18.,10.)                         323
```

```
      CALL AXIS(10.,0.,1H ,1,10.,90.,YMIN,DY,10.)                       325
      CALL LINE(DEG,VELOC,181,1,0,0.0.,18.,YMIN,DY)                     327
      IF(KCUNT.EQ.181) GO TO 36
      CALL LINE(DEG,VELOCI,181,1,0,0,0.,18.,YMIN,DY)                    332
   36 CALL PLOT(17.,0.,-3)                                              334
      KCUNT=0
   34 CCNTINUE
      IF(PLOTIT(6).NE.3) GO TC 87
      CC 86 JK=1,181
   86 DELTA(JK)=(VEL(JK+181)-VEL(JK))/VEL(JK+181)
      CALL AXIS(0.,0.,24HDIRECTION OF PRORAGATION,24,10.,0.,0.,18.,10.)  350
      CALL SCALE(DELTA,10.,181,1,10.,DMIN,DY)                           352
      CALL AXIS(0.,0.,11HDELTA V / V,11,10.,90.,DMIN,DY,10.)            354
      CALL AXIS(0.,10.,1H ,1,10.,0.,0.,18.,10.)                         356
      CALL AXIS(10.,0.,1H ,1,10.,90.,DMIN,DY,10.)                       358
      CALL LINE(DEG,DELTA,181,1,0,0.0.,18.,DMIN,DY)                     360
      CALL PLOT(17.0,0.,-3)                                             362
   87 CCNTINUE
      IF(PLOTIT(2).EQ.0) GO TO 37
      CALL AXIS(0.,0.,24HDIRECTION OF PROPAGATION,24,10.0,0.0,0.,18.0,
     1  10.0)                                                           367
      CALL AXIS.0.,0.,33HTIME AVERAGE POWER FLOW DIRECTION,33,10.,90.,
     1    -25.,5.,10.)                                                  369
      CALL AXIS(C.,10.,1H ,1,10.,0.,0.,18.,10.)                         371
      CALL AXIS(10.,0.,1H ,1,10.,90.,-25.,5.,10.)                       373
      CALL LINE(XX,YY,2,1,0,0.0.,1.,0.,1.)                              375
      CALL LINE(DEG,PANGLE,181,1,0,0.0.,18.,-25.,5.)                    377
      CALL PLOT(17.,0.,-3)                                              379
      KCNT=0
   37 CCNTINUE
      IF(PLOTIT(3).EQ.0) GC TO 75
      CALL SCALE(RT11 ,10.,KNT1,1,10.,RTMIN,DR)                         385
      CALL AXIS(0.,0.,24HDIRECTION OF PROPAGATION,24,10.0,0.0,0.,18.0,
     1  10.0)                                                           387
      CALL AXIS(0.,0.,8HMAGN T11,8,10.,90.,RTMIN,DR,10.)                389
      CALL LINE(DEG,RT11 ,181,1,0,0.0.,18.,RTMIN,DR)                    391
      CALL PLOT(17.,0.,-3)                                              393
      KNT1=0
   75 CCNTINUE
      IF(PLOTIT(4).EQ.0) GO TO 76
      CALL SCALE(RU1 ,10.,KNT2,1,10.,RTMIN,DR)                          399
      CALL AXIS(0.,0.,24HDIRECTION OF PROPAGATION,24,10.0,0.0,0.,18.0,
     1  10.0)                                                           401
      CALL AXIS(C.,0.,6HMAG U3,6,10.,90.,RTMIN,DR,10.)                  403
      CALL LINE(DEG,RU1 ,181,1,0,0.0.,18.,RTMIN,DR)                     405
      CALL PLOT(17.,0.,-3)                                              407
      CALL SCALE(RIU1,10.,KNT2,1,10.,RTMIN,DR)                          409
      CALL AXIS(0.,0.,24HDIRECTION OF PROPAGATION,24,10.0,0.0,0.,18.0,
     1  10.0)                                                           411
      CALL AXIS(C.,0.,6HPHASES,6,10.,90.,RTMIN,DR,10.)                  413
      CALL LINE(DEG,RIU1,181,1,0,0.0.,18.,RTMIN,DR)                     415
      CALL PLOT(17.,0.,-3)                                              417
      KNT2=0
   76 CCNTINUE
      IF(PLOTIT(5).EQ.0) GO TO 74
      CALL SCALE(RE1 ,10.,KNT3,1,10.,RTMIN,DR)                          423
```

```
      CALL AXIS(0.,0.,24HDIRECTION OF PROPAGATION,24,10.0,0.0,0.,10.0,
     1  10.0)                                                          425
      CALL AXIS(0.,0.,7HMAGN D1,8,10.,90.,RTMIN,DR,1C.)                 427
      CALL LINE(DEG,RE1 ,181,1.0,0.,0.,10.,RTMIN,DR)                    429
      CALL PLOT(17.,0.,-3)                                              431
      KNT3=0
   74 CCNTINUE

      END FILE 2                                                        433
   17 CCNTINUE
      IF(CETOUT) ENC FILE 2                                             435
      IF(EETOUT) KOUNT=0
      IF(GETOUT) KONT=0
      IF(GETOUT) KNT1=0
      IF(GETOUT) KNT2=0
      IF(GETOUT) KNT3=0
      GETCUT =.FALSE.
      IF (REPEAT)  GO TO 510                                    MAIN3000
      GO TO 520                                                 MAIN3010
                                                                MAIN3020
C.....ERRCR - L MATRIX SINGULAR.....                            MAIN3030
 1740 WRITE  (6, 1750)  (EL(I), I = 1, KGO)                     MAIN3040   451
 1750 FCRMAT (42H1*** L MATRIX SINGULAR (OUTPUT BY COLUMNS)//   MAIN3050
     .       (1H , 6E18.7))                                     MAIN3060
      GC TO 1708                                                MAIN3070
                                                                MAIN3080
C.....CALCULATE ADDITIONAL PARAMETERS FOR LITHIUM NIOBATE.....  MAIN3090
 1790 WRITE(6,1705)                                             MAIN3100   459
 1800 DC 1810 I = 1, 4                                          MAIN3110
      J = IA(I)                                                 MAIN3120
 1810 EX(I) = CEXP(-ALFAB(J)*WX/VS)                             MAIN3130   467
      CO 1890 I = 1, 4                                          MAIN3140
      U = (0.,0.)                                               MAIN3150
      CC 1850 K = 1, 4                                          MAIN3160
 1850 U = U + ETA(K)*BETAB(I,K)*EX(K)                           MAIN3170
      MAGU(I) = CABS(U)                                         MAIN3180   481
      PHASEU(I) = 0.                                            MAIN3190
      IF (MAGU(I) .NE. 0.) PHASEU(I) = ATAN2(AIMAG(U),REAL(U))*57.295779MAIN3200   486
 1890 CCNTINUE                                                  MAIN3210
      E1 = U                                                    MAIN3220
                                                                MAIN3230
C.....CCMPUTE TIME AVERAGE POWER FLOW.....                      MAIN3240
      P1M = P1FUN(ETA, C11, C15, C16, C14, C15, C13, E11, E31,  MAIN3250
     .                 C16, C56, C66, C46, C56, C36, E16, E36,  MAIN3260
     .                 C15, C55, C56, C45, C55, C35, E15, E35)  MAIN3270   492
      SPECL=SQRT(SQRT(REAL(P1M)**2+AIMAG(P1M)**2))                          493   494
      F2M = P1FUN (ETA, C16, C56, C66, C46, C56, C36, E16, E36,  MAIN3280
     .                  C12, C25, C26, C24, C25, C23, E12, E32,  MAIN3290
     .                  C14, C45, C46, C44, C45, C34, E14, E34)  MAIN3300   495
      IF(PLOTIT(2).EQ.0) GC TO 57
      KCNT=KCNT+1
      FANGLE(KCNT)=ATAN(REAL(P2M)/REAL(P1M))*180./3.1415                    500
   57 CCNTINUE
                                                                MAIN3310
C.....CALCULATE T S.....                                        MAIN3320
      TM31 = TFUN (ETA, WX, C15, C55, C56, C45, C55, C35, E15, E35)  MAIN3330   503
```

```
      TW32 = TFUN (ETA, WX, C14, C45, C46, C44, C45, C34, E14, E34)     MAIN3340    504
      TW33 = TFUN (ETA, WX, C13, C35, C36, C34, C35, C33, E13, E33)     MAIN3350    505
      TW11 = TFUN (ETA, WX, C11, C15, C16, C14, C15, C13, E11, E31)     MAIN3360    506
      TW12 = TFUN (ETA, WX, C16, C56, C66, C46, C56, C36, E16, E36)     MAIN3370    507
      TW22 = TFUN (ETA, WX, C12, C25, C26, C24, C25, C23, E12, E32)     MAIN3380    508
      IF(PLOTIT(3).EQ.0) GO TO 71
      KNT1=KNT1+1
      RT11(KNT1)=SQRT(REAL(TW11)**2+AIMAG(TW11)**2)/SPECL                           513
      RIT11(KNT1)=AIMAG(TW11)/SPECL
   71 CONTINUE
      S11 = (0.,0.)                                                     MAIN3390
      S22 = (0.,0.)                                                     MAIN3400
      S33 = (0.,0.)                                                     MAIN3410
      S12 = (0.,0.)                                                     MAIN3420
      S13 = (0.,0.)                                                     MAIN3430
      S23 = (0.,0.)                                                     MAIN3440
      DO 2190 I = 1, 4                                                  MAIN3450
      J = IA(I)                                                         MAIN3460
      S11 = S11 - ETA(I)*BETAB(1,I)*EX(I)                               MAIN3470
      S33 = S33 - ALFAB(J)*ETA(I)*BETAB(3,I)*EX(I)                      MAIN3480
      S12 = S12 - ETA(I)*BETAB(2,I)*EX(I)                               MAIN3490
      S13 = S13 - ETA(I)*(BETAB(1,I)*ALFAB(J) + BETAB(3,I)*JIMAG)*EX(I) MAIN3500
 2190 S23 = S23 - ETA(I)*BETAB(2,I)*ALFAB(J)*EX(I)                      MAIN3510
      S11 = S11*JIMAG/VS                                                MAIN3520
      S33 = S33/VS                                                      MAIN3530
      S12 = S12*0.5*JIMAG/VS                                            MAIN3540
      S13 = 0.5*S13/VS                                                  MAIN3550
      S23 = 0.5*S23/VS                                                  MAIN3560
      C1 = TFUN(ETA, WX, E11, E15, E16, E14, E15, E13,-T11,-T13)        MAIN3570    544
      D2 = TFUN(ETA, WX, E21, E25, E26, E24, E25, E23,-T21,-T23)        MAIN3580    545
      C3 = TFUN(ETA, WX, E31, E35, E36, E34, E35, E33,-T13,-T33)        MAIN3590    546
      E1 = JIMAG*E1/VS                                                  MAIN3600
      E3 = (0.,0.)                                                      MAIN3610
      DO 2310 I = 1, 4                                                  MAIN3620
      J = IA(I)                                                         MAIN3630
 2310 E3 = E3 + ALFAB(J)*ETA(I)*EX(I)*BETAB(4,I)                        MAIN3640
      E3 = E3/VS                                                        MAIN3650
                                                                        MAIN3660
      IF(PLOTIT(5).EQ.0) GO TO 73
      KNT3=KNT3+1
      RE1(KNT3)=SQRT(REAL(D1)**2+AIMAG(D1)**2)/SPECL                                562
   73 CONTINUE
C.....OUTPUT RESULTS.....                                               MAIN3670
      WRITE  (6, 2340)  WX                                              MAIN3680    564
      WRITE(2,2340) WX                                                              565
 2340 FORMAT (10H0.....WX =, 1PE14.7)                                   MAIN3690
      WRITE  (6, 2440)  TT31, TW31, TT32, TW32, TT33, TW33,             MAIN3700
     .                  TT11, TW11, TT12, TW12, TT22, TW22,             MAIN3710
     .                  SS11, S11, SS22, S22, SS33, S33,                MAIN3720
     .                  SS12, S12, SS13, S13, SS23, S23,                MAIN3730
     .                  PP1M, P1M, PP2M, P2M,                           MAIN3740
     .                  DD1,  D1,  DD2,  D2,  DD3, D3,                  MAIN3750
     .                  UU1, MAGU(1), PHASEU(1),                        MAIN3760
     .                  UU2, MAGU(2), PHASEU(2),                        MAIN3770
     .                  UU3, MAGU(3), PHASEU(3),                        MAIN3780
     .                  MAGU(4), PHASEU(4),                             MAIN3790
```

```
          LINB03   CONWAY      PHASE              N4                          12/31/69    000109      PAGE  10
     LINB03    -  EFN   SOURCE STATEMENT  -  IFN(S)  -

     .                 EE1, E1, EE3, E3                                  MAIN3800    566
      WRITE  (2, 2440)  TT31, TW31, TT32, TW32, TT33, TW33,              MAIN3700
     .                 TT11, TW11, TT12, TW12, TT22, TW22,              MAIN3710
     .                 SS11, S11, SS22, S22, SS33, S33,                 MAIN3720
     .                 SS12, S12, SS13, S13, SS23, S23,                 MAIN3730
     .                 PP1M, P1M, PP2M, P2M,                            MAIN3740
     .                 DD1,  D1,   DD2,  D2,   DD3, D3,                 MAIN3750
     .                 UU1, MAGU(1), PHASEU(1),                         MAIN3760
     .                 UU2, MAGU(2), PHASEU(2),                         MAIN3770
     .                 UU3, MAGU(3), PHASEU(3),                         MAIN3780
     .                 MAGU(4), PHASEU(4),                              MAIN3790
     .                 EE1, E1, EE3, E3                                 MAIN3800    567
 2440 FORMAT (1H0, 28X, 17HSTRESS COMPONENTS//6(1H , 18X, A3, 4H = (,    MAIN3810
     .        1PE14.7, 1H,, 1PE14.7, 1H)/)/1H , 28X,                    MAIN3820
     .        17HSTRAIN COMPONENTS//6(1H , 18X, A3, 4H = (,              MAIN3830
     .        1PE14.7, 1H,, 1PE14.7, 1H)/)/1H , 25X,                    MAIN3840
     .        23HTIME AVERAGE POWER FLOW//2(1H , 19X, A3, 4H = (,        MAIN3850
     .        1PE14.7, 1H,, 1PE14.7, 1H)/)/1H , 26X,                    MAIN3860
     .        21HELECTRIC DISPLACEMENT//3(1H , 19X, A2, 4H = (,          MAIN3870
     .        1PE14.7, 1H,, 1PE14.7, 1H)/)/1H , 25X,                    MAIN3880
     .        23HMECHANICAL DISPLACEMENT/1H , 24X, 9HMAGNITUDE,          MAIN3890
     .        7X, 5HPHASE/ 3(1H , 19X, A2, 3H = , 1PE14.7, 0PF10.3/)/    MAIN3900
     .        1H , 6X, 30HELECTRIC POTENTIAL MAGNITUDE =, 1PE15.7,       MAIN3910
     .        9H  PHASE =, 0PF9.3/1H0, 28X, 14HELECTRIC FIELD//          MAIN3920
     .        2(1H , 19X, A2, 4H = (, 1PE14.7, 1H,, 1PE14.7, 1H)/))      MAIN3930
 1502 FORMAT(2E15.8)
      PUNCH 1502, P1M,P2M                                                        568
      PUNCH 1502, TW31,TW32,TW33,TW11,TW12,TW22                                  569
      PUNCH 1502,S11,S22,S33,S12,S13,S23                                         570
      PUNCH 1506, (MAGU(I),PHASEU(I),I=1,4)                                      571
 1506 FORMAT(E15.8,F10.3)
      PUNCH 1502,E1,E3                                                           579
      PUNCH 1502, D1,D2,D3                                                       580
      DO 18 I=1,4
      RRRR=COS(PHASEU(I)*3.1415/180.)*MAGU(I)                                    585
      RIII=SIN(PHASEU(I)*3.1415/180.)*MAGU(I)                                    588
      DISP(I)=CMPLX(RRRR,RIII)
   18 CONTINUE
      IF(PLOTIT(4).EQ.0) GO TO 72
      KNT2=KNT2+1
      RU1(KNT2)=SQRT(REAL(DISP(3))**2+AIMAG(DISP(3))**2)/SPECL                   598
      RIU1(KNT2)=PHASEU(1)-PHASEU(3)
   72 CONTINUE
      WRITE(6,2441) (DISP(I),I=1,4)                                              601
      WRITE(2,2441) (DISP(I),I=1,4)                                              608
 2441 FORMAT(25X,23HMECHANICAL DISPLACEMENT,3(/23X,2E18.8),/,25X,
     1 20HELEC. POT. MAGNITUDE,/,23X,2E18.8)
      IF (DWX .EQ. 0.)  GO TO 1708                                      MAIN3940
      WX = WX + DWX                                                     MAIN3950
      IF (WX .LE. WXMAX)  GO TO 1790                                    MAIN3960
      WX = SWX                                                          MAIN3970
      GO TO 1708                                                        MAIN3980
    2 CONTINUE

      READ(5,3) BLIMIT,ELIMIT,INCR                                               622
    3 FORMAT(3I5)
```

```
      DO 4 I=BLIMIT,ELIMIT,INCR
      K=(I-BLIMIT)/INCR+1
      VSARAY(K)=I
      VS=I
      VSO=VS
      CALL ROOT(VSO,VS,N,FVS,EPSLON,MAX)                                631
      AAAAA(2*K-1)=AIMAG(FVS)
      AAAAA(2*K)=REAL(FVS)
      DETRAY(K)=REAL(FVS)
      DETIAY(K)=AIMAG(FVS)
      DEBUG K,DETRAY(K),DETIAY(K)                                       637
    4 CONTINUE
      DO 5 JJ=1,K
      AAAAA(2*JJ-1)=AAAAA(2*JJ-1)*1.E10
      AAAAA(2*JJ)=AAAAA(2*JJ)*1.E10
      DETRAY(JJ)=DETRAY(JJ)*1.E10
      DETIAY(JJ)=DETIAY(JJ)*1.E10
      JJJ=2*JJ-1
      IF(AAAAA(JJJ).GT.1.) AAAAA(JJJ)=1.
      IF(AAAAA(JJJ).LT.-1.) AAAAA(JJJ)=-1.
      IF(AAAAA(2*JJ).GT.1.) AAAAA(2*JJ)=1.
      IF(AAAAA(2*JJ).LT.-1.) AAAAA(2*JJ)=-1.
      IF(DETRAY(JJ).GT.1.) DETRAY(JJ)=1.
      IF(DETRAY(JJ).LT.-1.) DETRAY(JJ)=-1.
      IF(DETIAY(JJ).GT.1.) DETIAY(JJ)=1.
      IF(DETIAY(JJ).LT.-1.) DETIAY(JJ)=-1.
    5 CONTINUE
      YMIN=-1.
      DY=.2
      NNNN=2*K
      CALL SCALE(VSARAY,15.0,K,1,10.,XMIN,DX)                           691
      CALL AXIS(0.,0.,2HVS,2,15.0,0.0,XMIN,DX,10.0)                     693
      CALL AXIS(0.,0.,6HDETERM,6,10.,90.0,YMIN,DY,10.)                  695
      CALL LINE(VSARAY,DETRAY,K,1,1.4,XMIN,DX,YMIN,DY)                  697
      CALL LINE(VSARAY,DETIAY,K,1,1.4,XMIN,DX,YMIN,DY)                  699
      CALL PLOT(17.,0.,-3)                                              701
      ICHECK=.FALSE.
      GO TO 17
      CALL ENDPLT                                                       704

ERROR MESSAGE NUMBER    1
      END                                                     MAIN3990

ERROR MESSAGE NUMBER    2
```

```
$IBFTC FOCT..  DECK,DEBUG

      SUBROUTINE ROOT (VSO, VS, N, FVS, EPS, MAX)                       ROOT0030
CROOT                                                                   ROOT0020
                                                                        ROOT0040
      DIMENSION SUB(24)
      DATA SUB/1.,-2.,3.,-4.,5.,-6.,7.,-8.,9.,-10.,11.,1.,1.,1.,1.,1.,1.,
     U 2.,2.,3.,5.,10.,50.,100.,100./
      DATA KKKKK/0/
      DATA KICK/1/
      COMMON /GET/GETOUT
      COMMON/PLOTS/ICHECK
      LOGICAL GETOUT
      LOGICAL PREV
      DATA PREV/.FALSE./
      LOGICAL ICHECK
      COMMON      /FROOT/ FVSMAG, NT, ICASE                             ROOT0050
     .            /ALESS/ IALF                                          ROOT0060
                                                                        ROOT0070
      COMPLEX     F, FVS, FX0, FX1, FX2, FX3, G2, LAMDA3, ROUND,        ROOT0080
     .            T, T1, T2, EL                                         ROOT0090
      REAL        LAMDA2                                                ROOT0100
      LOGICAL       IALF                                                ROOT0110
                                                                        ROOT0120
      DATA          TEN10/1.E9/                                         ROOT0130
                                                                        ROOT0140
      KKKKK=KKKKK+1
      FACT1=1.01
      FACT2=1.005
      IF(KKKKK/2*2.NE.KKKKK) FACT1=.99
      IF(KKKKK/2*2.NE.KKKKK) FACT2=.995
      N = 0                                                             ROOT0150
      VS = VSO                                                          ROOT0160
      FVS    = ROUND(F(VS))                                             ROOT0170    8     9
      IF( IALF ) GO TO 600                                              ROOT0180
      IF(ICHECK) GO TO 530
      IF( MAX .EQ. 0 ) GO TO 530                                        ROOT0190
      IF( FVSMAG .LT. EPS ) GO TO 530                                   ROOT0200
      FX0 = FVS                                                         ROOT0210
      VS=FACT1*VSO
      FVS = ROUND( F( VS ) )                                            ROOT0230    22    23
      IF( IALF ) GO TO 600                                              ROOT0240
      IF( FVSMAG .LT. EPS ) GO TO 530                                   ROOT0250
      FX1 = FVS                                                         ROOT0260
      X2=FACT2*VSO
      VS = X2                                                           ROOT0280
      FVS = ROUND( F( VS ) )                                            ROOT0290    30    31
      IF( IALF ) GO TO 600                                              ROOT0300
      IF( FVSMAG .LT. EPS ) GO TO 530                                   ROOT0310
      FX2 = FVS                                                         ROOT0320
      H2=(-1.)**(KKKKK-1)*.005*VSO                                      38
      LAMDA2 = -0.5                                                     ROOT0340
```

```
      DELTA2 =  0.5                                                     ROOT0350
                                                                        ROOT0360
C.....B E G I N    I T E R A T I O N.....                               ROOT0370
  230 G2 = FX0*LAMDA2*LAMDA2 - FX1*DELTA2*DELTA2 + FX2*(LAMDA2 + DELTA2)ROOT0380
      T  = CSQRT(G2*G2 - 4.*FX2*DELTA2*LAMDA2*(FX0*LAMDA2               ROOT0390
     .   - FX1*DELTA2 + FX2))                                           ROOT0400    40
      T1 = G2 + T                                                       ROOT0410
      T2 = G2 - T                                                       ROOT0420
      T = T1                                                            ROOT0430
      IF (CABS(T2) .GT. CABS(T1))  T = T2                               ROOT0440    41    42
      IF (CABS(T) .EQ. 0.)  GO TO 530                                   ROOT0450
                                                                        ROOT0460    45
  300 LAMDA3 = -2.*FX2*DELTA2/T                                         ROOT0470
      VS = X2 + REAL(LAMDA3*H2)                                         ROOT0480
      FVS = ROUND(F(VS))                                                ROOT0490    50    51
      IF( IALF ) GO TO 400                                              ROOT0500
      IF( FVSMAG .LT. EPS ) GO TO 530                                   ROOT0510
      N  = N + 1                                                        ROOT0520
      IF(N.GT.MAX) GO TO 600
      H3 = VS - X2                                                      ROOT0540
      LAMDA2 = H3/H2                                                    ROOT0550
      DELTA2 = 1. + LAMDA2                                              ROOT0560
      FX0    = FX1                                                      ROOT0570
      FX1    = FX2                                                      ROOT0580
      FX2    = FVS                                                      ROOT0590
      X2     = VS                                                       ROOT0600
      H2     = H3                                                       ROOT0610
      IF (H2 .NE. 0.)  GO TO 230                                        ROOT0620
                                                                        ROOT0630
C.....E N D    O F    I T E R A T I O N.....                             ROOT0640
  530 CONTINUE
      IF(PREV) PREV=.FALSE.
      KKKKK=0
      KICK=1
      RETURN
  600 WRITE(6,1000) VS                                                  ROOT0660    70
 1000 FORMAT( /// 51H .....LESS THAN 4 ALPHAS WITH A POSITIVE REAL PART ROOT0670
     *        /  32H .....CASE TERMINATED  ( VS = , 1PE14.7, 2H ) //   )ROOT0680
      IF(ICHECK) GO TO 530
      IF(KKKKK/2*2.NE.KKKKK) GO TO 998
      VSO=VSO-SUB(KICK)
      KICK=KICK+1
      IF(KICK.EQ.25) GO TO 999
  998 RETURN 1
  999 CONTINUE
      IF(PREV) GETOLT=.TRUE.
      PREV=.TRUE.
      KICK=1
      RETURN
      GO TO 530                                                         ROOT0690

ERROR MESSAGE NUMBER    1
      END                                                               ROOT0700
```

```
$IBFTC SETCT.  DECK

CSETCTE      *** SETCTE COMPUTES THE C, T, E COEFFICIENTS FROM          CTE00020
C*               THE INPUT PARAMENTERS G, P, EPS, MU, LAMBDA, NU        CTE00030
      SUBRCUTINE SETCTE (MU, NU, LAMBDA, COEFF)                         CTE00040
                                                                        CTE00050
      CCMMCN /ROTAT/ROTATE
      LCGICAL ROTATE
      DIMENSION CPR(6,6),EPR(3,6),EPSPR(3,3)
      LCGICAL    COEFF                                                  CTE00060
      LCGICAL    AC12, AC23, AC24, AC14, AC34                           CTE00070
      REAL     MU, NU, LAMBDA                                           CTE00080
      DOUBLE PRECISION GAMMA(3,3), D, Q, DR, RM, RN, RL, CM, SM, CN, SN,CTE00090
     .                 CL, SL, FF, R, TIJ                               CTE00100
                                                                        CTE00110
      DIMENSION    LABE(6), LABC(5), LABT(6)                            CTE00120
                                                                        CTE00130
      CCMMCN /ZZTZ/ C(20),E(17),T(5)
      CCMMCN   /FRT/  GAMMA, D(3,3,3,3), Q(3,3,3)                       CTE00150
      CCMMCN     /GPEPS/  G(21), P(18), EPSLON(3,3)                     CTE00160
     .            /CSET/ CLIM, ELIM, TLIM                               CTE00170
     .           /CSET1/ AC12, AC23, AC24, AC14, AC34                   CTE00180
     .           /BETAN/ NBETA                                          CTE00190
                                                                        CTE00200
      CATA     DR / 57.2957795130823 2 /                                CTE00210
      CATA         LABE(1)/36HTRANSFORMED PIEZOELECTRIC CONSTANTS /,    CTE00220
     .             LABC(1)/30HTRANSFORMED ELASTIC CONSTANTS /,          CTE00230
     .             LABT(1)/36HTRANSFORMED DIELECTRIC CONSTANTS    /     CTE00240
                                                                        CTE00250
                                                                        CTE00260
      AC12 = .FALSE.                                                    CTE00270
      AC23 = .FALSE.                                                    CTE00280
      AC24 = .FALSE.                                                    CTE00290
      AC14 = .FALSE.                                                    CTE00300
      AC34 = .FALSE.                                                    CTE00310
      RM = MU/DR                                                        CTE00320
      RN = NU/DR                                                        CTE00330
      RL = LAMBDA/DR                                                    CTE00340
      CALL CSFUN (MU, RM, SM, CM)                                       CTE00350   2
      CALL CSFUN (NU, RN, SN, CN)                                       CTE00360   4
      CALL CSFUN (LAMBDA, RL, SL, CL)                                   CTE00370   6
      GAMMA(1,1) = CL*CN - SL*CM*SN                                     CTE00380
      GAMMA(1,2) = SL*CN + CL*CM*SN                                     CTE00390
      GAMMA(1,3) = SM*SN                                                CTE00400
      GAMMA(2,1) =-CL*SN - SL*CM*CN                                     CTE00410
      GAMMA(2,2) =-SL*SN + CL*CM*CN                                     CTE00420
      GAMMA(2,3) = SM*CN                                                CTE00430
      GAMMA(3,1) = SL*SM                                                CTE00440
      GAMMA(3,2) =-CL*SM                                                CTE00450
      GAMMA(3,3) = CM                                                   CTE00460
                                                                        CTE00470
C.....SET UP D AND Q MATRICES.....                                      CTE00480
```

```
C(1,1,1,1) = G(1)                                    CTE00490
C(2,2,2,2) = G(2)                                    CTE00500
C(3,3,3,3) = G(3)                                    CTE00510
C(1,1,2,2) = G(4)                                    CTE00520
C(2,2,1,1) = G(4)                                    CTE00530
C(1,1,3,3) = G(5)                                    CTE00540
C(3,3,1,1) = G(5)                                    CTE00550
C(1,1,2,3) = G(6)                                    CTE00560
C(1,1,3,2) = G(6)                                    CTE00570
C(2,3,1,1) = G(6)                                    CTE00580
C(3,2,1,1) = G(6)                                    CTE00590
D(1,1,1,3) = G(7)                                    CTE00600
C(1,1,3,1) = G(7)                                    CTE00610
C(1,3,1,1) = G(7)                                    CTE00620
D(3,1,1,1) = G(7)                                    CTE00630
C(1,1,1,2) = G(8)                                    CTE00640
C(1,1,2,1) = G(8)                                    CTE00650
C(1,2,1,1) = G(8)                                    CTE00660
C(2,1,1,1) = G(8)                                    CTE00670
C(2,2,3,3) = G(9)                                    CTE00680
C(3,3,2,2) = G(9)                                    CTE00690
C(2,2,2,3) = G(10)                                   CTE00700
C(2,2,3,2) = G(10)                                   CTE00710
C(2,3,2,2) = G(10)                                   CTE00720
D(3,2,2,2) = G(10)                                   CTE00730
C(2,2,1,3) = G(11)                                   CTE00740
C(2,2,3,1) = G(11)                                   CTE00750
C(1,3,2,2) = G(11)                                   CTE00760
C(3,1,2,2) = G(11)                                   CTE00770
D(2,2,1,2) = G(12)                                   CTE00780
D(2,2,2,1) = G(12)                                   CTE00790
D(1,2,2,2) = G(12)                                   CTE00800
D(2,1,2,2) = G(12)                                   CTE00810
C(3,3,2,3) = G(13)                                   CTE00820
C(3,3,3,2) = G(13)                                   CTE00830
C(2,3,3,3) = G(13)                                   CTE00840
C(3,2,3,3) = G(13)                                   CTE00850
C(3,3,1,3) = G(14)                                   CTE00860
D(3,3,3,1) = G(14)                                   CTE00870
C(1,3,3,3) = G(14)                                   CTE00880
C(3,1,3,3) = G(14)                                   CTE00890
C(3,3,1,2) = G(15)                                   CTE00900
D(3,3,2,1) = G(15)                                   CTE00910
C(1,2,3,3) = G(15)                                   CTE00920
C(2,1,3,3) = G(15)                                   CTE00930
C(2,3,2,3) = G(16)                                   CTE00940
C(2,3,3,2) = G(16)                                   CTE00950
C(3,2,2,3) = G(16)                                   CTE00960
C(3,2,3,2) = G(16)                                   CTE00970
C(2,3,1,3) = G(17)                                   CTE00980
C(2,3,3,1) = G(17)                                   CTE00990
C(3,2,1,3) = G(17)                                   CTE01000
D(3,2,3,1) = G(17)                                   CTE01010
C(1,3,2,3) = G(17)                                   CTE01020
C(3,1,2,3) = G(17)                                   CTE01030
D(1,3,3,2) = G(17)                                   CTE01040
```

```
C(3,1,3,2) = G(17)                                          CTE01050
C(2,3,1,2) = G(18)                                          CTE01060
C(2,3,2,1) = G(18)                                          CTE01070
D(3,2,1,2) = G(18)                                          CTE01080
D(3,2,2,1) = G(18)                                          CTE01090
C(1,2,2,3) = G(18)                                          CTE01100
C(2,1,2,3) = G(18)                                          CTE01110
D(1,2,3,2) = G(18)                                          CTE01120
C(2,1,3,2) = G(18)                                          CTE01130
D(1,3,1,3) = G(19)                                          CTE01140
C(1,3,3,1) = G(19)                                          CTE01150
D(3,1,1,3) = G(19)                                          CTE01160
C(3,1,3,1) = G(19)                                          CTE01170
D(1,3,1,2) = G(20)                                          CTE01180
C(1,3,2,1) = G(20)                                          CTE01190
C(3,1,1,2) = G(20)                                          CTE01200
C(3,1,2,1) = G(20)                                          CTE01210
C(1,2,1,3) = G(20)                                          CTE01220
C(2,1,1,3) = G(20)                                          CTE01230
C(1,2,3,1) = G(20)                                          CTE01240
D(2,1,3,1) = G(20)                                          CTE01250
C(1,2,1,2) = G(21)                                          CTE01260
C(1,2,2,1) = G(21)                                          CTE01270
C(2,1,1,2) = G(21)                                          CTE01280
C(2,1,2,1) = G(21)                                          CTE01290
C(1,1,1) = P(1)                                             CTE01300
C(1,2,2) = P(2)                                             CTE01310
C(1,3,3) = P(3)                                             CTE01320
C(1,2,3) = P(4)                                             CTE01330
C(1,3,2) = P(4)                                             CTE01340
C(1,1,3) = P(5)                                             CTE01350
C(1,3,1) = P(5)                                             CTE01360
C(1,1,2) = P(6)                                             CTE01370
C(1,2,1) = P(6)                                             CTE01380
C(2,1,1) = P(7)                                             CTE01390
C(2,2,2) = P(8)                                             CTE01400
C(2,3,3) = P(9)                                             CTE01410
C(2,2,3) = P(10)                                            CTE01420
C(2,3,2) = P(10)                                            CTE01430
C(2,1,3) = P(11)                                            CTE01440
C(2,3,1) = P(11)                                            CTE01450
C(2,1,2) = P(12)                                            CTE01460
C(2,2,1) = P(12)                                            CTE01470
C(3,1,1) = P(13)                                            CTE01480
C(3,2,2) = P(14)                                            CTE01490
C(3,3,3) = P(15)                                            CTE01500
C(3,2,3) = P(16)                                            CTE01510
C(3,3,2) = P(16)                                            CTE01520
C(3,1,3) = P(17)                                            CTE01530
C(3,3,1) = P(17)                                            CTE01540
C(3,1,2) = P(18)                                            CTE01550
C(3,2,1) = P(18)                                            CTE01560
C( 1) =FF(1,1,1,1)                                          CTE01570   8
C( 2) =FF(1,1,3,3)                                          CTE01580   9
C( 3) =FF(1,1,2,3)                                          CTE01590   10
C( 4) =FF(1,1,1,3)                                          CTE01600   11
```

```
      C( 5) =FF(3,3,3,3)                                        CTE01610   12
      C( 6) =FF(3,3,2,3)                                        CTE01620   13
      C( 7) =FF(3,3,1,3)                                        CTE01630   14
      C( 8) =FF(3,3,1,2)                                        CTE01640   15
      C( 9) =FF(2,3,2,3)                                        CTE01650   16
      C(10) =FF(2,3,1,3)                                        CTE01660   17
      C(11) =FF(2,3,1,2)                                        CTE01670   18
      C(12) =FF(1,3,1,3)                                        CTE01680   19
      C(13) =FF(1,3,1,2)                                        CTE01690   20
      C(14) =FF(1,2,1,2)                                        CTE01700   21
      C(15) =FF(1,1,1,2)                                        CTE01710   22
      C(16) =FF(1,1,2,2)                                        CTE01720   23
      C(17) =FF(2,2,1,3)                                        CTE01730   24
      C(18) =FF(2,2,1,2)                                        CTE01740   25
      C(19) =FF(2,2,2,3)                                        CTE01750   26
      C(20) =FF(2,2,3,3)                                        CTE01760   27
      IF(.NOT. RCTATE) GO TO 1601
      CPR(1,1)=FF(1,1,1,1)                                                 31
      CPR(1,2)=FF(1,1,2,2)                                                 32
      CPR(1,3)=FF(1,1,3,3)                                                 33
      CPR(1,4)=FF(1,1,2,3)                                                 34
      CPR(1,5)=FF(1,1,1,3)                                                 35
      CPR(1,6)=FF(1,1,1,2)                                                 36
      CPR(2,2)=FF(2,2,2,2)                                                 37
      CPR(2,3)=FF(2,2,3,3)                                                 38
      CPR(2,4)=FF(2,2,2,3)                                                 39
      CPR(2,5)=FF(2,2,1,3)                                                 40
      CPR(2,6)=FF(2,2,1,2)                                                 41
      CPR(3,3)=FF(3,3,3,3)                                                 42
      CPR(3,4)=FF(3,3,2,3)                                                 43
      CPR(3,5)=FF(3,3,1,3)                                                 44
      CPR(3,6)=FF(3,3,1,2)                                                 45
      CPR(4,4)=FF(2,3,2,3)                                                 46
      CPR(4,5)=FF(2,3,1,3)                                                 47
      CPR(4,6)=FF(2,3,1,2)                                                 48
      CPR(5,5)=FF(1,3,1,3)                                                 49
      CPR(5,6)=FF(1,3,1,2)                                                 50
      CPR(6,6)=FF(1,2,1,2)                                                 51
 1601 CONTINUE
      DO 10 I=1,20                                              CTE01770
      IF( ABS( C(I) ) .LT. CLIM ) C(I) = 0.                     CTE01780
   10 CONTINUE                                                  CTE01790
      E( 1) = R(1,1,1)                                          CTE01800   63
      E( 2) = R(1,3,3)                                          CTE01810   64
      E( 3) = R(1,2,3)                                          CTE01820   65
      E( 4) = R(1,1,3)                                          CTE01830   66
      E( 5) = R(1,1,2)                                          CTE01840   67
      E( 6) = R(3,1,1)                                          CTE01850   68
      E( 7) = R(3,3,3)                                          CTE01860   69
      E( 8) = R(3,2,3)                                          CTE01870   70
      E( 9) = R(3,1,3)                                          CTE01880   71
      E(10) = R(3,1,2)                                          CTE01890   72
      E(11) = R(1,2,2)                                          CTE01900   73
      E(12) = R(3,2,2)                                          CTE01910   74
      E(13) = R(2,1,1)                                          CTE01920   75
      E(14) = R(2,3,3)                                          CTE01930   76
```

```
      E(15) = R(2,2,3)                                          CTE01940   77
      E(16) = R(2,1,3)                                          CTE01950   78
      E(17) = R(2,1,2)                                          CTE01960   79
      IF(.NOT. ROTATE) GO TO 1602
      EPR(1,1)=R(1,1,1)                                                    83
      EPR(1,2)=R(1,2,2)                                                    84
      EPR(1,3)=R(1,3,3)                                                    85
       EPR(1,4)=R(1,2,3)                                                   86
      EPR(1,5)=R(1,1,3)                                                    87
      EPR(1,6)=R(1,1,2)                                                    88
      EPR(2,1)=R(2,1,1)                                                    89
      EPR(2,2)=R(2,2,2)                                                    90
      EPR(2,3)=R(2,3,3)                                                    91
      EPR(2,4)=R(2,2,3)                                                    92
      EPR(2,5)=R(2,1,3)                                                    93
      EPR(2,6)=R(2,1,2)                                                    94
      EPR(3,1)=R(3,1,1)                                                    95
      EPR(3,2)=R(3,2,2)                                                    96
      EPR(3,3)=R(3,3,3)                                                    97
      EPR(3,4)=R(3,2,3)                                                    98
      EPR(3,5)=R(3,1,3)                                                    99
      EPR(3,6)=R(3,1,2)                                                    100
 1602 CONTINUE
      DO 20 I=1,17                                              CTE01970
      IF( ABS( E(I) ) .LT. ELIM ) E(I) = 0.                     CTE01980
   20 CONTINUE                                                  CTE01990
      EPSLON(3,2) = EPSLON(2,3)                                 CTE02000
      EPSLON(2,1) = EPSLON(1,2)                                 CTE02010
      EPSLON(3,1) = EPSLON(1,3)                                 CTE02020
      T(1) = TIJ(1,1)                                           CTE02030   112
      T(2) = TIJ(1,2)                                           CTE02040   113
      T(3) = TIJ(3,3)                                           CTE02050   114
      T(4) = TIJ(2,1)                                           CTE02060   115
      T(5) = TIJ(2,2)                                           CTE02070   116
      IF(.NOT. ROTATE) GO TO 1603
      EPSPR(1,1)=TIJ(1,1)                                                  120
      EPSPR(1,2)=TIJ(1,2)                                                  121
      EPSPR(1,3)=TIJ(1,3)                                                  122
      EPSPR(2,1)=TIJ(2,1)                                                  123
      EPSPR(2,2)=TIJ(2,2)                                                  124
      EPSPR(2,3)=TIJ(2,3)                                                  125
      EPSPR(3,1)=TIJ(3,1)                                                  126
      EPSPR(3,2)=TIJ(3,2)                                                  127
      EPSPR(3,3)=TIJ(3,3)                                                  128
 1603 CONTINUE
      DO 30 I=1,5                                               CTE02080
      IF( ABS( T(I) ) .LT. TLIM ) T(I) = 0.                     CTE02090
   30 CONTINUE                                                  CTE02100
                                                                CTE02110
C.....SEE IF PIEZOELECTRIC COEFFICIENTS ARE ALL ZERO.....       CTE02120
      NBETA = 3                                                 CTE02130
      DO 470 K = 1, 18                                          CTE02140
      IF (P(K) .NE. 0.)  GO TO 490                              CTE02150
  470 CONTINUE                                                  CTE02160
      NBETA = 2                                                 CTE02170
  490 CONTINUE                                                  CTE02180
```

```
      IF( C(10).EQ.0. .AND. C(3).EQ.0. .AND. C(13).EQ.0. .AND.          CTE02190
     .    C(15).EQ.0. ) AC12 = .TRUE.                                   CTE02200
      IF( C(6).EQ.0. .AND. C(8).EQ.0. .AND. C(10).EQ.0. .AND.           CTE02210
     .    C(13).EQ.0. ) AC23 = .TRUE.                                   CTE02220
      IF( E(8).EQ.0. .AND. E(3).EQ.0. .AND. E(10).EQ.0. .AND.           CTE02230
     .    E(5).EQ.0. ) AC24 = .TRUE.                                    CTE02240
      IF( E(9).EQ.0. .AND. E(4).EQ.0. .AND. E(6).EQ.0. .AND.            CTE02250
     .    E(1).EQ.0. ) AC14 = .TRUE.                                    CTE02260
      IF( E(7).EQ.0. .AND. E(2).EQ.0. .AND. E(5).EQ.0. .AND.            CTE02270
     .    E(4).EQ.0. ) AC34 = .TRUE.                                    CTE02280
      IF( COEFF ) WRITE(6,1599) LABC, ( C(I), I=1,20 ),                 CTE02290
     .            LABE, ( E(I), I=1,17 ), LABT, ( T(I), I=1,5 )         CTE02300    162
      IF(.NOT. ROTATE) GO TO 1604
      WRITE(6,1600) CPR(1,1),CPR(2,2),CPR(3,3),CPR(1,2),
     1 ((CPR(I,J),J=3,6),I=1,2),
     U   ((CPR(I,J),J=4,6),I=3,4),CPR(5,5),CPR(5,6),CPR(6,6),
     1((EPR(I,J),J=1,6),I=1,3),((EPSPR(I,J),J=1,3),I=1,3)                 187
 1600 FORMAT(5H C   ,21(/E18.7),/,5H  E  ,18(/E18.7),/,5H  EPS,9(/E18.7))
     1  )
 1604 CONTINUE
 1599 FORMAT( 1H0,4X,5A6, 18H  ( C(I), I=1,20 ) // 20( 1H ,1PE18.7/ ) / CTE02310
     .        1H0,4X,6A6, 18H  ( E(I), I=1,17 ) // 17( 1H ,1PE18.7/ ) / CTE02320
     .        1H0,4X,6A6, 17H  ( T(I), I=1,5 ) // 5( 1H ,1PE18.7/ ) )   CTE02330
      RETURN                                                            CTE02340
      END                                                               CTE02350
```

```
$IBFTC RCUND.  DECK

CRCUND
      COMPLEX FUNCTION ROUND (F)                                        ROUND020
      REAL   I, F(2)                                                    ROUND030
      R = F(1)                                                          ROUND040
      I = F(2)                                                          ROUND050
      IF (R .EQ. 0. .OR. I .EQ. 0.)  GO TO 100                          ROUND060
      IF (ABS(I/R) .LT. 1.E5) GO TO 50                                  ROUND070
      R = 0.                                                            ROUND080
      GO TO 100                                                         ROUND090
   50 IF (ABS(R/I) .GE. 1.E5)  I = 0.                                   ROUND100
  100 RCUND = CMPLX(R, I)                                               ROUND110
      RETURN                                                            ROUND120
      END                                                               ROUND130
                                                                        ROUND140
```

```
$IBFTC CSFUN.  DECK

CCSFUN
      SUBRCUTINE CSFUN (Y, RX, SX, CX)                                  CSFUN020
      DOUBLE PRECISION RX, SX, CX                                       CSFUN030
      X = Y                                                             CSFUN040
      IF (X .LT. 0.)  X = X + 360.                                      CSFUN050
      IF (X .EQ. 0. .OR. X .EQ. 180.)  GO TO 150                        CSFUN060
      IF (X .EQ. 90. .OR. X .EQ. 270.)  GO TC 200                       CSFUN070
      SX = DSIN(RX)                                                     CSFUN080
      CX = DCOS(RX)                                                     CSFUN090    10
  100 RETURN                                                            CSFUN100    11
  150 CX = 1.                                                           CSFUN110
      SX = 0.                                                           CSFUN120
      IF (X .EQ. 180.)  CX = -1.                                        CSFUN130
      GC TC 100                                                         CSFUN140
  200 SX = 1.                                                           CSFUN150
      CX = 0.                                                           CSFUN160
      IF (X .EQ. 270.)  SX = -1.                                        CSFUN170
      GC TO  100                                                        CSFUN180
      END                                                               CSFUN190
                                                                        CSFUN200
```

```
$IBFTC FF....  DECK

CFF                                                                     FF000020
      CCUBLE PRECISICN FUNCTION FF (I, J, K, L)                         FF000030
      CCMMCN    /FRT/  GAMMA(3,3), D(3,3,3,3), Q(3,3,3)                 FF000040
      DOUBLE PRECISION  GAMMA, D, Q                                     FF000050
      INTEGER   R, S, T, U                                              FF000060
      FF= 0.                                                            FF000070
      CC 50 R = 1, 3                                                    FF000080
      CC 50 S = 1, 3                                                    FF000090
      CC 50 T = 1, 3                                                    FF000100
      CC 50 U = 1, 3                                                    FF000110
   50 FF=FF + GAMMA(I,R)*GAMMA(J,S)*GAMMA(K,T)*GAMMA(L,U)*D(R,S,T,U)    FF000120
      RETURN                                                            FF000130
      EAD                                                               FF000140
```

```
$IBFTC R.       DECK
CR                                                                      R0000020
      DOUBLE PRECISION FUNCTION R (I, J, K)                             R0000030
      COMMON   /FRT/  GAMMA(3,3), D(3,3,3,3), Q(3,3,3)                  R0000040
      DOUBLE PRECISION GAMMA, D, Q                                      R0000050
      INTEGER  S, T, U                                                  R0000060
      R = 0.                                                            R0000070
      DO 50 S = 1, 3                                                    R0000080
      DO 50 T = 1, 3                                                    R0000090
      DO 50 U = 1, 3                                                    R0000100
   50 R = R + GAMMA(I,S)*GAMMA(J,T)*GAMMA(K,U)*Q(S,T,U)                 R0000110
      RETURN                                                            R0000120
      END                                                               R0000130
```

```
$IBFTC TIJ.    DECK

CTIJ
      DOUBLE PRECISION FUNCTION TIJ (I, J)                              TIJ00020
      COMMON   /FRT/  GAMMA(3,3), JUNK(108)                             TIJ00030
      COMMON     /GPEPS/  G(21), P(18), EPSLON(3,3)                     TIJ00040
      DOUBLE PRECISION GAMMA, JUNK                                      TIJ00050
      INTEGER  R, S                                                     TIJ00060
      TIJ = 0.                                                          TIJ00070
      DO 50 R = 1, 3                                                    TIJ00080
      DO 50 S = 1, 3                                                    TIJ00090
   50 TIJ = TIJ + GAMMA(I,R)*GAMMA(J,S)*EPSLON(R,S)                     TIJ00100
      RETURN                                                            TIJ00110
      END                                                               TIJ00120
                                                                        TIJ00130
```

```
$IBFTC F..... DECK

CF      THIS FUNCTICN EVALUATES THE L DETERMINANT FOR A VALUE OF VS      F0000020
C*      FOR EITHER THE LITHIUM OR GOLD LITHIUM CASE                      F0000030
C*                                                                       F0000040
C*****************************************************************      F0000050
                                                                         F0000060
      CCMPLEX FUNCTION F (VS)                                            F0000070
                                                                         F0000080
      CCMMCN /ZZTZ/ CC,CE,CT
      CCMMCN      /FROOT/ FVSMAG, NT, ICASE                              F0000100
     .            /BETAN/ NBETA                                          F0000110
     .            /CSET1/ AC12, AC23, AC24, AC14, AC34                   F0000120
      CCMMCN      /LINK / ALFA(8), ALFAI(8), EL(100), ALFAA(6),          F0000130
     .                    ALFAB(4), BETAA(3,6), BETAB(4,4), EPSO,        F0000140
     .                    MUA, LAMDAA, RHOA, MUB, LAMCAB, NUB, RHOB,     F0000150
     .                    VSX,KS, EPSLON, DIGIT, WH, WXA, WXB, KL,       F0000160
     .                    KM, ALL, ROCTS, ITER, COEFF, DETERM, POLYN,    F0000170
     .                    ALPHA, BETA, MAX                               F0000180
     .            /CIA/ IA(4)                                            F0000190
     .            /CCM  / ACAP, EPSR                                     F0000200
     .            /GPEPS/ XG(21), XP(18), XEPS(9)                        F0000210
     .            /ALESS/ IALF                                           F0000220
     )       /CIFL/FXAGNL
                                                                         F0000230
      CCMPLEX     ALFA, FVS, EL, EA(6), EB(4), UA(3), UB(3), ALFAI,      F0000240
     .            ALFAA, ALFAB, BETAA, BETAB, POLY(9), JIMAG,            F0000250
     .            B1(4,4), CA, DB, DC, ELL(1G,10), ALF(8), AOLD(9)       F0000260
      CCMPLEX     ALF1, ALF2, XEL(100), XXEL(3,3)                        F0000270
      CCMPLEX       B11, B12, B13, B14, B22, B23, B24, B33, B34, B44, AK,F0000280
     .      BB(3,4),BB1(3,3),BETAB1(4),
     .      B1A(2,3),BETAX(2),CXO,CX1,B1B(4,4)
      REAL        MUA, LAMCAA, MUB, LAMCAB, NUB, CA(4,4), CB(4,4),      F0000300
     .            CD(4,4), CC(20), CE(17), CT(5), B1D(2,4,4)             F0000310
      LOGICAL     ALL, ROOTS, ITER, COEFF, DETERM, POLYN, ALPHA, BETA,  F0000320
     .   FXAGNL,
     .            ACAP                                                   F0000330
      LCGICAL     AC12, AC23, AC24, AC14, AC34, IALF                     F0000340
                                                                         F0000350
      CIMENSION     ALAB(3,2), IA1(3), IA2(3), LAB(3)                    F0000360
      CIMENSION   B1X(4), NB(4)                                          F0000370
      EQUIVALENCE  (EL, ELL), ( B1, B1D ),                               F0000380
     .             (CC(1), C11), (CC(2), C13), (CC(3), C14), (CC(4),C15),F0000390
     .             (CC(5), C33), (CC(6), C34), (CC(7), C35), (CC(8),C36),F0000400
     .             (CC(9), C44), (CC(10),C45), (CC(11),C46),             F0000410
     .             (CC(12),C55), (CC(13),C56), (CC(14),C66),             F0000420
     .             (CC(15),C16), (CE(1), E11), (CE(2), E13),             F0000430
     .             (CE(3), E14), (CE(4), E15), (CE(5), E16),             F0000440
     .             (CE(6), E31), (CE(7), E33), (CE(8), E34),             F0000450
     .             (CE(9), E35), (CE(10),E36), (CT(1), T11),             F0000460
     .             (CT(2), T13), (CT(3), T33)                            F0000470
                                                                         F0000480
```

```
      CATA          LAB(1)/18H (1,3) (2,4) CASE /                        F0000490
      CATA           JIMAG / (0.,1.) /. CX0,CX1/(0.,0.),(1.,0.)/         F0000500
      CATA          ALAB(1,1)/54H1 ROW, 3 ZERO CASE4 ROW, 2 ZERO CASEZEROF0000510
     .-PIEZOELECTRIC/,  TEN,TEN10/1.E-10,1.E10/
                                                                         F0000530
      B11( AK ) =  AK * ( C55*AK + CMPLX(0.,(C15+C15)) ) - C11 + RVS     F0000540
      B12( AK ) =  AK * ( C45*AK + CMPLX(0.,(C14+C56)) ) - C16           F0000550
      B13( AK ) =  AK * ( C35*AK + CMPLX(0.,(C13+C55)) ) - C15           F0000560
      B14( AK ) = -AK * ( E35*AK + CMPLX(0.,(E15+E31)) ) + E11           F0000570
      B22( AK ) =  AK * ( C44*AK + CMPLX(0.,(C46+C46)) ) - C66 + RVS     F0000580
      B23( AK ) =  AK * ( C34*AK + CMPLX(0.,(C36+C45)) ) - C56           F0000590
      B24( AK ) = -AK * ( E34*AK + CMPLX(0.,(E14+E36)) ) + E16           F0000600
      B33( AK ) =  AK * ( C33*AK + CMPLX(0.,(C35+C35)) ) - C55 + RVS     F0000610
      B34( AK ) = -AK * ( E33*AK + CMPLX(0.,(E13+E35)) ) + E15           F0000620
      B44( AK ) = +AK * ( T33*AK + CMPLX(0.,(T13+T13)) ) - T11           F0000630
                                                                         F0000640
      IALF = .FALSE.                                                     F0000650
      ICASE = 0                                                          F0000660
      ICB = 0                                                            F0000670
      K1 = 1                                                             F0000680
      K2 = 4                                                             F0000690
      L1 = 1                                                             F0000700
      L2 = 16                                                            F0000710
      IB1 = 1                                                            F0000720
      IB2 = 4                                                            F0000730
                                                                         F0000740
C.....CALCULATE COEFFICIENTS OF POLYNOMIAL.....                          F0000750
  490 RVS   = RHOB*VS*VS                                                 F0000760
      CALL STRIP  (POLY, VS, RHOB, ALL, POLYN)                           F0000770    30
      CALL CROOT (POLY, AOLD, NT, ALFA)                                  F0000780    32
      IF (NBETA .EQ. 3)  GO TO 520                                       F0000790
      CC = T33 + T33                                                     F0000800
      DA = CMPLX(0., -T13 - T13)                                         F0000810
      CB = CSQRT(CMPLX(-4.*T13*T13 + 4.*T11*T33, 0.))                    F0000820    37
      ALF1 = (DA + CB)/DC                                                F0000830
      ALF2 = (DA - CB)/DC                                                F0000840
      DO 510 I = 1, 8                                                    F0000850
      IF (CABS(ALFA(I) - ALF1) .LE. 1.E-5)  ALFA(I) = (-10.,-10.)        F0000860    42
      IF (CABS(ALFA(I) - ALF2) .LE. 1.E-5)  ALFA(I) = (-10.,-10.)        F0000870    47
  510 CONTINUE                                                           F0000880
  520 DO 525 I = 1, 8                                                    F0000890
  525 ALF(I) = ALFA(I)                                                   F0000900
      IF( ROOTS .OR. ALL ) WRITE(6,528) ( ALF(I), I=1,8 )                F0000910    63
  528 FORMAT (33H0INTERMEDIATE ROOTS OF POLYNOMIAL//(1H , 1P8E13.5))     F0000920
                                                                         F0000930
C.....SELECT POSITIVE REAL ROOTS.....                                    F0000940
      DO 789 K=1,4                                                       F0000950
  789 IA(K) = K                                                          F0000960
      K = 0                                                              F0000970
      DO 630 I = 1, 8                                                    F0000980
      RA = REAL(ALFA(I))                                                 F0000990
      IF( RA .GT. 0. ) GO TO 610                                         F0001000
      GO TO 630                                                          F0001010
  610 K = K + 1                                                          F0001020
      ALFAB(K) = ALFA(I)                                                 F0001030
      IF( K .EQ. 4 ) GO TO 640                                           F0001040
```

```
  630 CONTINUE                                                          F0001050
      IF( K .LE. 1 ) GO TO 637                                          F0001060
      IF( AC12 .AND. AC23 ) GO TO 631                                   F0001070
      IF( NBETA.EQ.2 .AND. K.EQ.3 ) GO TO 640                           F0001072
      GO TO 634                                                         F0001074
  631 IF( NBETA .EQ. 2 ) GO TO 400                                      F0001080
      IF( .NOT. AC24 ) GO TO 636                                        F0001090
      IC = 1                                                            F0001100
      IF( K .EQ. 3 ) GO TO 140                                          F0001110
  632 WRITE(6,633) ( ALAB(I,IC), I=1,3 ), K                             F0001120   117
  633 FORMAT( /// 16H *** DEGENERATE ,3A6,3H  (,I2,9H ALPHAS ) )        F0001130
  634 IALF = .TRUE.                                                     F0001140
      GO TO 1357                                                        F0001150
  636 IF( .NOT. ( AC14.AND.AC34 ) ) GO TO 634                           F0001160
      GO TO 280                                                         F0001170
  637 WRITE(6,638) K                                                    F0001180   130
  638 FORMAT( /// 23H *** NUMBER OF ALPHAS =,I2,                        F0001190
     .            20H  -  CASE TERMINATED /              )             F0001200
      GO TO 634                                                         F0001210
                                                                        F0001220
  640 IF (NBETA .EQ. 2)  ALFAB(4) = (0.,0.)                             F0001230
      IF( ROOTS .OR. ALL ) WRITE(6,788 ) ( ALFAB(K), K=1,4 )            F0001240   135
  788 FORMAT (28H0INTERMEDIATE POSITIVE ROOTS//(1H , 1P8E13.5))         F0001250
                                                                        F0001260
C.....CALCULATE EETA B.....                                             F0001270
      K4 = NBETA + 1                                                    F0001280
  810 DO 580 K = 1, K4                                                  F0001290
      B1(1,1) =  B11( ALFAB(K) )                                        F0001300
      B1(1,2) =  B12( ALFAB(K) )                                        F0001310
      B1(1,3) =  B13( ALFAB(K) )                                        F0001320
      B1(1,4) =  B14( ALFAB(K) )                                        F0001330
      B1(2,2) =  B22( ALFAB(K) )                                        F0001340
      B1(2,3) =  B23( ALFAB(K) )                                        F0001350
      B1(2,4) =  B24( ALFAB(K) )                                        F0001360
      B1(3,3) =  B33( ALFAB(K) )                                        F0001370
      B1(3,4) =  B34( ALFAB(K) )                                        F0001380
      B1(2,1) = B1(1,2)                                                 F0001390
      B1(3,1) = B1(1,3)                                                 F0001400
      B1(3,2) = B1(2,3)                                                 F0001410
      IF(NBETA.EQ.2) GO TO 940
      B1(4,1) =-B1(1,4)                                                 F0001460
      B1(4,2) =-B1(2,4)                                                 F0001470
      B1(4,3) =-B1(3,4)                                                 F0001480
      B1(4,4) = B44( ALFAB(K) )                                         F0001490
      IF(K.GT.1) GO TO 830
                                                                        F0001440
C.....CHECK FOR DEGENERATE CASES.....                                   F0001450
      DO 820 I=1,4                                                      F0001500
      NB(I) = 0                                                         F0001510
      DO 820 J=1,4                                                      F0001520
      IF( B1D(1,I,J).EQ.0. .AND. B1D(2,I,J).EQ.0. ) NB(I) = NB(I) + 1   F0001530
  820 CONTINUE                                                          F0001540
      IF( NB(2) .EQ. 3 ) GO TO 100                                      F0001550
      IF( NB(1).NE.2 .OR. NB(2).NE.2 .OR. NB(3).NE.2 .OR. NB(4).NE.2 )  F0001560
     .         GO TO 830
      GO TO 200                                                         F0001580
```

```
C.....PIEZOELECTRIC.....
  830 IF( ACAP ) WRITE(6,975) K, ( ( B1(I,J), J=1,4 ), I=1,4 )                185
      CC E50 I=1,3
      CC E40 J=1,3
  840 B1B(J,I)=B1(J,I)*TEN
      B1B(4,I)=B1(4,I)
  850 B1B(I,4)=B1(I,4)
      B1B(4,4)=B1(4,4)*TEN10
      KK=4
      IF(HXAGNL) GC TO 9C0
  860 CC E70 J=1,4
      CO 870 I=1,3
  870 BB(I,J)=B1B(I,J)
      IF( ACAP ) WRITE(6,875) K, ( ( BB(I,J), J=1,4 ), I=1,3 )                222
  875 FORMAT(4HOBB(,I1,1H),//(1H,1P8E13.5))
      CALL CMATS(BB,BETAB1(1),3,1,$1960)                                      231
  880 BETAB1(KK)=CX1
      BETAB(4,K)=BETAB1(4)
      CO 890 J=1,3
  890 BETAB(J,K)=BETAB1(J)*TEN
      GC TC 980
C.....HEXAGONAL CRYSTAL.....
  900 CC 910 J=1,3
      CC 910 I=1,3
  910 BB1(I,J)=B1B(I,J)
      CALL CDET(BB1,3,FVS,KEXP)                                               253
      FVSMAG=CABS(FVS)                                                        255
      IF(FVSMAG.GT.1.E-5) CO TO 860
      KK=1
      CO 930 I=1,3
      CO 920 J=1,3
  920 BB(I,J)=B1B(I+1,J+1)
      BB(I,3)=-BB(I,3)
  930 BB(I,4)=-B1B(I+1,1)
      IF( ACAP ) WRITE(6,875) K, ( ( BB(I,J), J=1,4 ), I=1,3 )                274
      CALL CMATS(BB,BETAB1(2),3,1,$1960)                                      283
      GO TO 880
C.....ZERC-PIEZOELECTRIC CASE.....
  940 IF( ACAP ) WRITE(6,974) K, ( ( B1(I,J), J=1,3 ), I=1,2 )                287
  974 FCRMAT(6HOACAP(,I1,1H) // (1H ,1P6E13.5))
  975 FCRMAT(6HOACAP(,I1,1H) // (1H ,1P8E13.5))
      B1(3,1)=B1(1,2)
      B1(4,1)=B1(2,2)
      B1(1,2)=-B1(1,3)
      B1(2,2)=-B1(2,3)
      K2=3
      CALL CMATS(B1,BETAB(1,K),NBETA,1,$1960 )                                298
      BETAB(4,K)=CX0
      BETAB(3,K)=CX1
  980 CCNTINUE
      IF (NBETA .EC. 3)  GC TO 983                                   F0001750
                                                                     F0001760
C.....ZERC - PIEZCELECTRIC CASE.....                                 F0001770
      CC 982 I = 1, 4                                                F0001780
      BETAB(I,4) = (0.,0.)                                           F0001790
      CC 9R2 J = 1, 3                                                F0001800
```

```
  982 BETAB(I,J) = BETAB(I,J)*1.E-10                                    F0001810
      GO TO 983                                                         F0001820
                                                                        F0001830
                                                                        F0001840
C.....1 ROW, 3 ZERO CASE.....                                           F0001850
                                                                        F0001860
C.....( 4 ALPHAS ).....                                                 F0001870
  100 CONTINUE                                                          F0001880
      ICASE = 1                                                         F0001890
      J = 1                                                             F0001900
      BMIN = CABS( B1(2,2) )                                            F0001910    325
      DO 110 K=2,4                                                      F0001920
      B1X = CABS( B22( ALFAB( K ) ) )                                   F0001930    330
      IF( B1X .GE. BMIN ) GO TO 110                                     F0001940
      J = K                                                             F0001950
      BMIN = B1X                                                        F0001960
  110 CONTINUE                                                          F0001970
      IA(1) = J                                                         F0001980
      JA = 2                                                            F0001990
      DO 120 K=1,4                                                      F0002000
      IF( K .EQ. J ) GO TO 120                                          F0002010
      IA(JA) = K                                                        F0002020
      JA = JA + 1                                                       F0002030
  120 CONTINUE                                                          F0002040
      BETAB(2,1) = 1.E-10                                               F0002050
      BETAB(1,1) = CX0                                                  F0002060
      BETAB(3,1) = CX0                                                  F0002070
      BETAB(4,1) = CX0                                                  F0002080
      J1 = 2                                                            F0002090
      J2 = 4                                                            F0002100
  125 DO 130 J=J1,J2                                                    F0002110
      K = IA(J)                                                         F0002120
      B1A(1,1) =  B11( ALFAB(K) )                                       F0002130
      B1A(2,1) =  B13( ALFAB(K) )                                       F0002140
      B1A(3,1) =  B33( ALFAB(K) )                                       F0002160
      B1A(1,3) = -B14( ALFAB(K) )                                       F0002170
      B1A(2,3) = -B34( ALFAB(K) )                                       F0002180
      BETAX = B1A(1,1)*B1A(2,2) - B1A(2,1)**2                           F0002190    361
      BETAB(1,J) = ( B1A(2,1)*B1A(2,3) - B1A(1,3)*B1A(2,2) ) / BETAX    F0002200
      BETAB(2,J) = CX0                                                  F0002210
      BETAB(3,J) = ( B1A(2,1)*B1A(1,3) - B1A(1,1)*B1A(2,3) ) / BETAX    F0002220
  130 BETAB(4,J) = CX1                                                  F0002230
      IF( ICASE .EQ. 3 ) GO TO 983                                      F0002240
      GO TO 270                                                         F0002250
                                                                        F0002260
C.....( 3 ALPHAS ).....                                                 F0002270
  140 ICASE = 3                                                         F0002280
      N1 = 0                                                            F0002290
      DO 150 I=1,K                                                      F0002300
      IF( CABS( B22( ALFAB(I) ) ) .GT. 1.E7 ) N1 = N1 + 1               F0002310    380
  150 CONTINUE                                                          F0002320
      IF( N1 .LT. 3 ) GO TO 632                                         F0002330
      J1 = 1                                                            F0002340
      J2 = 3                                                            F0002350
      K2 = 3                                                            F0002360
      IB2 = 3                                                           F0002370
```

```
      L2 = 12                                                           F0002380
      ICB = 3                                                           F0002390
      WRITE(6,160) ( ALAB(I,1), I=1,3 ), ( I, ALFAB(I), I=1,K )         F0002400    394
  160 FORMAT( /// 16H *** DEGENERATE ,3A6,14H  ( 3 ALPHAS ) /           F0002410
     .            ( 11H     ALPHA(,I1,3H) =, 1P2E13.5 / )     )         F0002420
      GO TO 125                                                         F0002430
                                                                        F0002440
                                                                        F0002450
C.....4 ROW, 2 ZERO CASE.....                                           F0002460
                                                                        F0002470
C.....( 4 ALPHAS ).....                                                 F0002480
  200 CONTINUE                                                          F0002490
      ICASE = 2                                                         F0002500
      B1X(1) = CABS( B1(1,1)*B1(3,3) - B1(1,3)**2 )                     F0002510    410   411
      J = 1                                                             F0002520
      BMIN = B1X(1)                                                     F0002530
      DO 210 K=2,4                                                      F0002540
      B1X(K) = CABS( B11(ALFAB(K))*B33(ALFAB(K))-B13(ALFAB(K))**2 )     F0002550    419   420
      IF( B1X(K) .GE. BMIN ) GO TO 210                                  F0002560
      J = K                                                             F0002570
      BMIN = B1X(K)                                                     F0002580
  210 CONTINUE                                                          F0002590
      I = 1                                                             F0002600
      IF( J .EQ. 1 ) I = 2                                              F0002610
      DO 220 K=1,4                                                      F0002620
      IF( K .EQ. J ) GO TO 220                                          F0002630
      IF( B1X(K) .GE. B1X(I) ) GO TO 220                                F0002640
      I = K                                                             F0002650
  220 CONTINUE                                                          F0002660
  230 CONTINUE                                                          F0002670
      JA = 3                                                            F0002680
      JB = 1                                                            F0002690
      DO 240 K=1,4                                                      F0002700
      IF( K.EQ.J .OR. K.EQ.I ) GO TO 235                                F0002710
      IA(JA) = K                                                        F0002720
      JA = JA + 1                                                       F0002730
      GO TO 240                                                         F0002732
  235 IA(JB) = K                                                        F0002734
      JB = JB + 1                                                       F0002736
  240 CONTINUE                                                          F0002740
  245 DO 250 K=1,2                                                      F0002750
      I = IA(K)                                                         F0002760
      BETAB(1,K) = - B13(ALFAB(I)) / B11(ALFAB(I)) * 1.E-10             F0002770
      BETAB(2,K) = CX0                                                  F0002780
      BETAB(3,K) = 1.E-10                                               F0002790
  250 BETAB(4,K) = CX0                                                  F0002800
      IF( ICB .EQ. 1 ) GO TO 983                                        F0002810
  255 DO 260 K=3,4                                                      F0002820
      I = IA(K)                                                         F0002830
      BETAB(1,K) = CX0                                                  F0002840
      BETAB(2,K) = B24(ALFAB(I)) / B22(ALFAB(I))                        F0002850
      BETAB(3,K) = CX0                                                  F0002860
  260 BETAB(4,K) = CX1                                                  F0002870
      IF( ICB .EQ. 2 ) GO TO 983                                        F0002880
      GO TO 270                                                         F0002890
                                                                        F0002900
```

```
C.....( LESS THAN 4 ALPHAS ).....                                    F0002910
  280 IC = 2                                                         F0002920
      I1 = 0                                                         F0002930
      I2 = 0                                                         F0002940
      CC 310 I=1,K                                                   F0002950
      TERM = CABS( - B22(ALFAB(I))*B44(ALFAB(I)) - B24(ALFAB(I))**2 ) F0002960    511   512
      IF( TERM .GE. 1.E-5 ) GO TO 300                                F0002970
      I1 = I1 + 1                                                    F0002980
      IA1(I1) = I                                                    F0002990
      GC TO 310                                                      F0003000
  300 I2 = I2 + 1                                                    F0003010
      IA2(I2) = I                                                    F0003020
  310 CONTINUE                                                       F0003030
      IF( I2 .EQ. 2 ) GO TO 340                                      F0003040
      IF( I1 .EQ. 2 ) GO TO 320                                      F0003050
      GO TO 632                                                      F0003060
                                                                     F0003070
C.....( 2,4 CASE ).....                                              F0003080
  320 IA(3) = IA1(1)                                                 F0003090
      IA(4) = IA1(2)                                                 F0003100
      ICASE = 5                                                      F0003110
      IB1 = 3                                                        F0003120
      ICB = 2                                                        F0003130
      L1 = 9                                                         F0003140
      K1 = 3                                                         F0003150
      GO TO 360                                                      F0003160
                                                                     F0003170
C.....( 1,3 CASE ).....                                              F0003180
  340 IA(1) = IA2(1)                                                 F0003190
      IA(2) = IA2(2)                                                 F0003200
      ICB = 1                                                        F0003210
  350 ICASE = 4                                                      F0003220
      IB2 = 2                                                        F0003230
      L2 = 8                                                         F0003240
      K2 = 2                                                         F0003250
  360 J = IA(IB1)                                                    F0003260
      K = IA(IB2)                                                    F0003270
      WRITE(6,370) ( ALAB(I,IC),I=1,3 ), LAB(ICB), IB1,IB2,IB1,ALFAB(J),F0003280
     .                                   IB2, ALFAB(K)               F0003290    547
  370 FCRMAT( /// 16H *** DEGENERATE ,4A6 /                          F0003300
     .            43H     CALCULATE BETA(I,K) AND L(I,K) FOR K =,I2, F0003310
     .            4H AND,I2,8H (I=1,4) //                            F0003320
     .            2(11H     ALPHA(,I1,3H) =,1P2E13.5 / ) /          ) F0003330
      IF( ICB .EQ. 3 ) ICB = 1                                       F0003340
      GC TO ( 245, 255 ), ICB                                        F0003350
                                                                     F0003360
                                                                     F0003370
C.....ZERC - PIEZOELECTRIC CASE.....                                 F0003380
  400 IC = 3                                                         F0003390
      I1 = 0                                                         F0003400
      CO 430 I=1,K                                                   F0003410
      CA22 = CABS( B22( ALFAB(I) ) )                                 F0003420    567
      IF( K .EQ. 3 ) GO TO 410                                       F0003430
      IF( CA22 .GT. 1.E7 ) I1 = I1 + 1                               F0003440
      GC TO 430                                                      F0003450
  410 IF( I .GT. 1 ) GO TO 420                                       F0003460
```

```
      CAMIN = CA22                                                      F0003470
      J = I                                                             F0003480
      GC TC 430                                                         F0003490
  420 IF( CAMIN .LE. CA22 ) GO TO 430                                   F0003500
      CAMIN = CA22                                                      F0003510
      J = I                                                             F0003520
  430 CCNTINUE                                                          F0003530
      IF( K .EQ. 2 ) GO TO 450                                          F0003540
      I1 = 0                                                            F0003550
      CC 440 I=1,3                                                      F0003560
      IF( I .EQ. J ) GO TO 440                                          F0003570
      I1 = I1 + 1                                                       F0003580
      IA(I1) = I                                                        F0003590
  440 CCNTINUE                                                          F0003600
      GO TO 460                                                         F0003610
  450 IF( I1 .NE. 2 ) GC TO 632                                         F0003620
  460 ICB = 3                                                           F0003630
      GC TC 350                                                         F0003640
                                                                        F0003650
                                                                        F0003660
  270 IF( .NOT. ( RCOTS .OR. ALL ) ) GO TO 983                          F0003670
      II1 = IA(1)                                                       F0003680
      II2 = IA(2)                                                       F0003690
      II3 = IA(3)                                                       F0003700
      II4 = IA(4)                                                       F0003710
      WRITE(6,984) ( ALAB(I,ICASE), I=1,3 ), ALFAB(II1), ALFAB(II2),    F0003720
     .                                       ALFAB(II3), ALFAB(II4)     F0003730    611
  984 FCRMAT( 21HORE-ORDERED ALPHAS ( , 3A6, 2H ) // ( 1H ,1P8E13.5 ) ) F0003740
  983 IF( BETA .OR. ALL ) WRITE(6,985 ) ( ( BETAB(I,J),                 F0003750
     .                                  J=IB1,IB2 ), I=1,4 )           F0003760    623
  985 FCRMAT (20HOINTERMEDIATE BETA B//(1H , 1P8E13.5))                 F0003770
      IF (KS .NE. 0)  GO TC 1390                                        F0003780
                                                                        F0003790
C.....EVALUATE LITHIUM NIOBATE EQUATICNS.....                           F0003800
      L = L1                                                            F0003810
      CO 1330 K=K1,K2                                                   F0003820
      J = IA(K)                                                         F0003830
      EL(L)   = BETAB(1,K)*(CMPLX(C., C15) + ALFAB(J)*C55)              F0003840
     .        + BETAB(2,K)*(CMPLX(O., C56) + ALFAB(J)*C45)              F0003850
     .        + BETAB(3,K)*(CMPLX(O., C55) + ALFAB(J)*C35)              F0003860
     .        + BETAB(4,K)*(CMPLX(O., E15) + ALFAB(J)*E35)              F0003870
      EL(L+1) = BETAB(1,K)*(CMPLX(O., C14) + ALFAB(J)*C45)              F0003880
     .        + BETAB(2,K)*(CMPLX(O., C46) + ALFAB(J)*C44)              F0003890
     .        + BETAB(3,K)*(CMPLX(O., C45) + ALFAB(J)*C34)              F0003900
     .        + BETAB(4,K)*(CMPLX(O., E14) + ALFAB(J)*E34)              F0003910
      EL(L+2) = BETAB(1,K)*(CMPLX(O., C13) + ALFAB(J)*C35)              F0003920
     .        + BETAB(2,K)*(CMPLX(O., C36) + ALFAB(J)*C34)              F0003930
     .        + BETAB(3,K)*(CMPLX(O., C33) + ALFAB(J)*C33)              F0003940
     .        + BETAB(4,K)*(CMPLX(O., E13) + ALFAB(J)*E33)              F0003950
      IF (KL .EC. 0)  GO TO 1190                                        F0003960
 1170 EL(L+3) = BETAB(4,K)                                              F0003970
      GO TO 1330                                                        F0003980
 1190 IF (WH .EQ. O. .AND. KM .EQ. 0)  GO TO 1170                       F0003990
      IF (WH .LE. 1.E10)  GO TO 1220                                    F0004000
      ST = EPSR                                                         F0004010
      GC TO 1290                                                        F0004020
```

```
 1220 IF (WH .NE. 0. .OR. KM .NE. 1)  GO TO 1250                        F0004030
      ST = 0.                                                           F0004040
      GC TO 1290                                                        F0004050
 1250 IF (KM .NE. 0 .OR. WH .EQ. 0. .GR. WH .GE. 1.E10)  GO TO 1280     F0004060
      ST=COSH(WH/VS)/SINH(WH/VS)*EPSR                                    691   692
      CO TO 1290
 1280 ST = TANH(WH/VS) * EPSR                                           F0004090   695
 1290 EL(L+3) = BETAB(1,K)*(CMPLX(0., E31) + ALFAB(J)*E35)              F0004100
     .        + BETAB(2,K)*(CMPLX(0., E36) + ALFAB(J)*E34)              F0004110
     .        + BETAB(3,K)*(CMPLX(0., E35) + ALFAB(J)*E33)              F0004120
     .        -(CMPLX(0., T13) + ALFAB(J)*T33 + EPSO*ST)*BETAB(4,K)     F0004130
      EL(L+3) = EL(L+3) * 1.E+10                                        F0004140
 1330 L = L + 4                                                         F0004150
      IF (NBETA .EQ. 3)  GO TC 1340                                     F0004160
                                                                        F0004170
C.....ZERC - PIEZCELECTRIC CASE.....                                    F0004180
      EL(4) = (0.,0.)                                                   F0004190
      EL(8) = (0.,0.)                                                   F0004200
      EL(12)= (0.,0.)                                                   F0004210
      EL(13)= (0.,0.)                                                   F0004220
      EL(14)= (0.,0.)                                                   F0004230
      EL(15)= (0.,0.)                                                   F0004240
      EL(16) = CX1                                                      F0004250
                                                                        F0004260
 1340 IF( DETERM .OR. ALL ) WRITE(6,1335) ( EL(I), I=L1,L2 )            F0004270   716
 1335 FORMAT (33H0INTERMEDIATE L MATRIX BY COLUMNS//                    F0004280
     .        (1H ,1P8E13.5))                                           F0004290
      ICB1 = ICB + 1                                                    F0004300
      GC TO ( 1343, 1360, 137C, 1380 ), ICB1                            F0004310
 1343 CC 1345 I=1,16                                                    F0004320
 1345 XEL(I) = EL(I)                                                    F0004330
      CALL CDET (XEL, 4, FVS, KEXP)                                     F0004340   734
 1350 F = FVS                                                           F0004350
      FVSMAG = CABS( FVS )                                              F0004360   736
      IF (DETERM .OR. ALL)  WRITE (6, 1355)  VS, FVS, FVSMAG            F0004370   737
 1355 FCRMAT (5HOVS =, E15.7, 5X, 7HF(VS) =, 2E15.7,5X,5HMAG = E15.7 )  F0004380
 1357 RETURN                                                            F0004390
 1360 FVS = EL(1)*EL(7) - EL(5)*EL(3)                                   F0004400
      GC TO 1350                                                        F0004410
 1370 FVS = EL(10)*EL(16) - EL(14)*EL(12)                               F0004420
      GC TO 1350                                                        F0004430
 1380 J = 1                                                             F0004440
      CC 1385 K=1,3                                                     F0004450
      XXEL(1,K) = EL(J)                                                 F0004460
      XXEL(2,K) = EL(J+2)                                               F0004470
      XXEL(3,K) = EL(J+3)                                               F0004480
 1385 J = J + 4                                                         F0004490
      CALL CDET( XXEL, 3, FVS, KEXP )                                   F0004500   759
      GC TO 1350                                                        F0004510
                                                                        F0004520
C.....EVALUATE GOLD LITHIUM NIOBATE EQLATIONS.....                      F0004530
 1390 CD = MUA + MUA + LAMCAA                                           F0004540
      CA = MUA*DC/1.E20                                                 F0004550
      RVS=RHOA*VS*VS                                                    F0004560
      CB =(RVS*(MUA + DD) - 2.*MUA*DC)/1.E20                            F0004570
      CC = (RVS - DD)*(RVS - MUA)/1.E20                                 F0004580
```

```
      FVS = CSQRT(CE*DB - 4.*CA*DC)                                     F0004590    762
      ALFAA(1) = CSQRT((-DB + FVS)/(DA + DA))                           F0004600    763
      ALFAA(2) = -ALFAA(1)                                              F0004610
      ALFAA(3) = CSQRT((-DB - FVS)/(DA + DA))                           F0004620    764
      ALFAA(4) = -ALFAA(3)                                              F0004630
      ALFAA(5) = CSQRT(CMPLX((MUA - RVS)/MUA, 0.))                      F0004640    765
      ALFAA(6) = -ALFAA(5)                                              F0004650
      IF( ALPHA .OR. ALL ) WRITE(6,1505) ( ALFAA(I), I=1,6 )            F0004660    766
 1505 FORMAT (21H0INTERMEDIATE ALPHA A//(1H , 1P6E13.5))                F0004670
      DO 1550 K = 1, 4                                                  F0004680
      BETAA(1,K) = CMPLX(0., -LAMDAA - MUA)*ALFAA(K)/                   F0004690
     .             ((MUA*ALFAA(K)*ALFAA(K) - DD + RVS)*1.E10)           F0004700
      BETAA(2,K) = (0.,0.)                                              F0004710
 1550 BETAA(3,K) = (1.E-10,0.)                                          F0004720
      BETAA(2,5) = (1.E-10,0.)                                          F0004730
      BETAA(2,6) = (1.E-10,0.)                                          F0004740
      BETAA(3,5) = (0.,0.)                                              F0004750
      BETAA(3,6) = (0.,0.)                                              F0004760
      IF( BETA .OR. ALL ) WRITE(6,1595) ( ( BETAA(I,J), I=1,3 ), J=1,6 )F0004770
     .   ((BETAA(I,J), I = 1, 3), J = 1, 6)                             F0004780    786
 1595 FORMAT (31H0INTERMEDIATE BETA A BY COLUMNS//(1H , 1P6E13.5))      F0004790
      DO 1620 J = 1, 6                                                  F0004800
      DO 1620 I = 1, 3                                                  F0004810
 1620 ELL(I,J) = BETAA(I,J)                                             F0004820
      DO 1650 J = 7, 10                                                 F0004830
      DO 1650 I = 1, 3                                                  F0004840
 1650 ELL(I,J) = -BETAB(I,J-6)                                          F0004850
      DO 1740 J = 1, 6                                                  F0004860
      ELL(4,J) = BETAA(1,J)*ALFAA(J)*MUA + CMPLX(0.,MUA)*BETAA(3,J)     F0004870
      ELL(5,J) = BETAA(2,J)*ALFAA(J)*MUA                                F0004880
      ELL(6,J) = CMPLX(0.,LAMDAA)*BETAA(1,J) + BETAA(3,J)*ALFAA(J)*DD   F0004890
      FVS = CEXP(ALFAA(J)*WH/VS)                                        F0004900    843
      ELL(7,J) = ELL(4,J)*FVS                                           F0004910
      ELL(8,J) = ELL(5,J)*FVS                                           F0004920
      ELL(9,J) = ELL(6,J)*FVS                                           F0004930
 1740 ELL(10,J)= (0.,0.)                                                F0004940
      DO 1910 J = 7, 10                                                 F0004950
      I = IA(J-6)                                                       F0004960
      ELL(4,J) =-BETAB(1,J-6)*(CMPLX(0., C15) + ALFAB(I)*C55)           F0004970
     .         - BETAB(2,J-6)*(CMPLX(0., C56) + ALFAB(I)*C45)           F0004980
     .         - BETAB(3,J-6)*(CMPLX(0., C55) + ALFAB(I)*C35)           F0004990
     .         - BETAB(4,J-6)*(CMPLX(0., E15) + ALFAB(I)*E35)           F0005000
      ELL(5,J) = -BETAB(1,J-6)*(CMPLX(0., C14) + ALFAB(I)*C45)          F0005010
     .         -  BETAB(2,J-6)*(CMPLX(0., C46) + ALFAB(I)*C44)          F0005020
     .         -  BETAB(3,J-6)*(CMPLX(0., C45) + ALFAB(I)*C34)          F0005030
     .         - BETAB(4,J-6)*(CMPLX(0., E14) + ALFAB(I)*E34)           F0005040
      ELL(6,J) = -BETAB(1,J-6)*(CMPLX(0., C13) + ALFAB(I)*C35)          F0005050
     .           -BETAB(2,J-6)*(CMPLX(0.,C36)+ALFAB(I)*C34  )
     .         -  BETAB(3,J-6)*(CMPLX(0., C35) + ALFAB(I)*C33)          F0005070
     .         - BETAB(4,J-6)*(CMPLX(0., E13) + ALFAB(I)*E33)           F0005080
      ELL(7,J) =  (0.,0.)                                               F0005090
      ELL(8,J) =  (0.,0.)                                               F0005100
      ELL(9,J) =  (0.,0.)                                               F0005110
 1910 ELL(10,J)=  BETAB(4,J-6)                                          F0005120
      DO 1915 I = 1, 3                                                  F0005130
      DO 1915 J = 1, 10                                                 F0005140
```

```
 1915 ELL(I,J) = ELL(I,J)*1.E10                                         F0005150
      IF( DETERM .OR. ALL ) WRITE(6,1930) (( ELL(I,J), J=1,10 ), I=1,10)F0005160
     .   ((ELL(I,J), J = 1, 10), I = 1, 10)                             F0005170    905
 1930 FORMAT (17H1*** L MATRIX ***//(1H , 1P8E15.6))                    F0005180
      DO 1940 I=1,100                                                   F0005190
 1940 XEL(I) = ELL(I,1)                                                 F0005200
      CALL COET  (XEL, 10, FVS, KEXP)                                   F0005210    933
      GO TO 1350                                                        F0005220
                                                                        F0005230
C.....ERROR IN MATRIX INVERSION.....                                    F0005240
 1960 WRITE  (6, 1970)                                                  F0005250    935
 1970 FORMAT (30H0***SINGULAR MATRIX IN BETA***)                        F0005260
      GO TO 1350                                                        F0005270
      END                                                               F0005280
```

```
$IBFTC STRIP.  DECK

CSTRIP     *** ARRAY OF CONDUCTING STRIPS OVER PIEZOELECTRIC MEDIUM *** STRP0020
C*GV012                                                                STRP0030
C*                              G.V. ROBERTS                           STRP0040
C*                                 03.15.68                            STRP0050
C*********************************************************************  STRP0060
      SUBROUTINE STRIP  (A, VS, RHO, ALL, COEFF)                        STRP0070
                                                                        STRP0080
      COMMON /ZZTZ/ CC(20),CE(17),CT(5)
      COMMON      /FLAG/  CNCE                                          STRP0100
      COMPLEX     A(9), ZERO, CNE, JIMAG                                STRP0110
      REAL        ONES(5), CA(4,4), CB(4,4), CC(4,4)                    STRP0120
      INTEGER     P                                                     STRP0130
      LOGICAL     ALL, COEFF, CNCE                                      STRP0140
      EQUIVALENCE (CC(1), C11), (CC(2), C13), (CC(3), C14), (CC(4),C15),STRP0150
     .            (CC(5), C33), (CC(6), C34), (CC(7), C35), (CC(8),C36),STRP0160
     .            (CC(9), C44), (CC(10),C45), (CC(11),C46),             STRP0170
     .            (CC(12),C55), (CC(13),C56), (CC(14),C66),             STRP0180
     .            (CC(15),C16), (CE(1), E11), (CE(2), E13),             STRP0190
     .            (CE(3), E14), (CE(4), E15), (CE(5), E16),             STRP0200
     .            (CE(6), E31), (CE(7), E33), (CE(8), E34),             STRP0210
     .            (CE(9), E35), (CE(10),E36), (CT(1), T11),             STRP0220
     .            (CT(2), T13), (CT(3), T33)                            STRP0230
                                                                        STRP0240
      DATA    TPI, ZERO, CNE, ONES, JIMAG / 6.2831853, (0.,0.), (1.,0.),STRP0250
     .         1., -1., -1., 1., 1., (0.,1.) /                          STRP0260
                                                                        STRP0270
C.....SET UP MATRICES.....                                              STRP0280
      IF (.NOT. CNCE)  GO TO 670                                        STRP0290
      CNCE = .FALSE.                                                    STRP0300
      CA(1,1) = C55                                                     STRP0310
      CA(1,2) = C45                                                     STRP0320
      CA(2,1) = C45                                                     STRP0330
      CA(1,3) = C35                                                     STRP0340
      CA(3,1) = C35                                                     STRP0350
      CA(1,4) = E35                                                     STRP0360
      CA(4,1) = E35                                                     STRP0370
      CA(2,2) = C44                                                     STRP0380
      CA(2,3) = C34                                                     STRP0390
      CA(3,2) = C34                                                     STRP0400
      CA(2,4) = E34                                                     STRP0410
      CA(4,2) = E34                                                     STRP0420
      CA(3,3) = C33                                                     STRP0430
      CA(3,4) = E33                                                     STRP0440
      CA(4,3) = E33                                                     STRP0450
      CA(4,4) = -T33                                                    STRP0460
      CB(1,1) = C15 + C15                                               STRP0470
      CB(1,2) = C14 + C56                                               STRP0480
      CB(2,1) = CB(1,2)                                                 STRP0490
      CB(1,3) = C13 + C55                                               STRP0500
      CB(3,1) = CB(1,3)                                                 STRP0510
```

```
      CB(1,4) = E15 + E31                                               STRP0520
      CB(4,1) = CB(1,4)                                                 STRP0530
      CB(2,2) = C46 + C46                                               STRP0540
      CB(2,3) = C36 + C45                                               STRP0550
      CB(3,2) = CB(2,3)                                                 STRP0560
      CB(2,4) = E14 + E36                                               STRP0570
      CB(4,2) = CB(2,4)                                                 STRP0580
      CB(3,3) = C35 + C35                                               STRP0590
      CB(3,4) = E13 + E35                                               STRP0600
      CB(4,3) = CB(3,4)                                                 STRP0610
      CB(4,4) = -T13 - T13                                              STRP0620
      CD(1,2) = -C16                                                    STRP0630
      CD(2,1) = -C16                                                    STRP0640
      CD(1,3) = -C15                                                    STRP0650
      CD(3,1) = -C15                                                    STRP0660
      CD(1,4) = -E11                                                    STRP0670
      CD(4,1) = -E11                                                    STRP0680
      CD(2,3) = -C56                                                    STRP0690
      CD(3,2) = -C56                                                    STRP0700
      CD(2,4) = -E16                                                    STRP0710
      CD(4,2) = -E16                                                    STRP0720
      CD(3,4) = -E15                                                    STRP0730
      CD(4,3) = -E15                                                    STRP0740
      CD(4,4) =  T11                                                    STRP0750
                                                                        STRP0760
C.....P H E W.....                                                      STRP0770
  670 DO 680 I = 1, 9                                                   STRP0780
  680 A(I) = ZERO                                                       STRP0790
                                                                        STRP0800
C.....PREPARE FOR GAMMA(N) LOOP.....                                    STRP0810
      RGAM = RHO*VS*VS                                                  STRP0820
      CD(1,1) = RGAM - C11                                              STRP0830
      CD(2,2) = RGAM - C66                                              STRP0840
      CD(3,3) = RGAM - C55                                              STRP0850
                                                                        STRP0860
C.....COMPUTE COEFFICIENTS OF EIGHT DEGREE POLYNOMIAL.....             STRP0870
      P = 0                                                             STRP0880
      DO 1030 J = 1, 4                                                  STRP0890
      DO 1020 K = 1, 4                                                  STRP0900
      IF (K .EQ. J)  GO TO 1020                                         STRP0910
      DO 1010 L = 1, 4                                                  STRP0920
      IF (L .EQ. K .OR. L .EQ. J)  GO TO 1010                           STRP0930
      M = 10 - J - K - L                                                STRP0940
      P = P + 1                                                         STRP0950
      IF (P .GT. 5)  P = 2                                              STRP0960
      T1 = CA(1,J)*CB(2,K) + CB(1,J)*CA(2,K)                            STRP0970
      T2 = CA(1,J)*CD(2,K) - CB(1,J)*CB(2,K) + CD(1,J)*CA(2,K)          STRP0980
      T3 = CB(1,J)*CD(2,K) + CD(1,J)*CB(2,K)                            STRP0990
      ZH = CA(1,J)*CA(2,K)*CA(3,L)                                      STRP1000
      ZI = CA(1,J)*CA(2,K)*CB(3,L) + T1*CA(3,L)                         STRP1010
      ZJ = CA(1,J)*CA(2,K)*CD(3,L) - T1*CB(3,L) + T2*CA(3,L)            STRP1020
      ZK = CD(3,L)*T1 + CB(3,L)*T2 + CA(3,L)*T3                         STRP1030
      ZL = T2*CD(3,L) - T3*CB(3,L) + CD(1,J)*CD(2,K)*CA(3,L)            STRP1040
      ZM = T3*CD(3,L) + CD(1,J)*CD(2,K)*CB(3,L)                         STRP1050
      ZN = CD(1,J)*CD(2,K)*CD(3,L)                                      STRP1060
      ZS = CA(4,M)                                                      STRP1070
```

```
      ZU = CB(4,M)                                                      STRP1080
      ZV = CD(4,M)                                                      STRP1090
      A(1) = A(1) + ONES(P)*ZH*ZS                                       STRP1100
      A(2) = A(2) + ONES(P)*(ZH*ZU + ZI*ZS)                             STRP1110
      A(3) = A(3) + ONES(P)*(ZH*ZV - ZI*ZU + ZJ*ZS)                     STRP1120
      A(4) = A(4) + ONES(P)*(ZI*ZV + ZJ*ZU + ZK*ZS)                     STRP1130
      A(5) = A(5) + ONES(P)*(ZJ*ZV - ZK*ZU + ZL*ZS)                     STRP1140
      A(6) = A(6) + ONES(P)*(ZK*ZV + ZL*ZU + ZM*ZS)                     STRP1150
      A(7) = A(7) + ONES(P)*(ZL*ZV - ZM*ZU + ZN*ZS)                     STRP1160
      A(8) = A(8) + ONES(P)*(ZM*ZV + ZN*ZU)                             STRP1170
      A(9) = A(9) + ONES(P)*ZN*ZV                                       STRP1180
 1010 CONTINUE                                                          STRP1190
 1020 CONTINUE                                                          STRP1200
 1030 CONTINUE                                                          STRP1210
      DO 1035 I = 2, 8, 2                                               STRP1220
 1035 A(I) = JIMAG*A(I)                                                 STRP1230
      IF (ALL .OR. COEFF)  WRITE (6, 1050) (A(I), I = 1, 9)             STRP1240   99
 1050 FORMAT (27HOCOEFFICIENTS OF POLYNOMIAL/(1H , 2E18.7))             STRP1250
                                                                        STRP1260
C.....NORMALIZE COEFFICIENTS TO LARGEST VALUE.....                      STRP1270
      ANORM =CABS(A)                                                    STRP1280   107
      DO 1155 I = 2, 9                                                  STRP1290
 1155 ANORM = AMAX1 (ANORM,CABS(A(I)))                                  STRP1300   113
      DO 1157 I = 1, 9                                                  STRP1310
      A(I) = A(I)/ANORM                                                 STRP1320
      IF (CABS(A(I)) .LT. 1.E-6)  A(I) = ZERO                           STRP1330   122
 1157 CONTINUE                                                          STRP1340
      IF (ALL .OR. COEFF)  WRITE (6, 1050)  (A(I), I = 1, 9)            STRP1350   129
      RETURN                                                            STRP1360
      END                                                               STRP1370
```

```
$IBFTC CROOT.  DECK

CCROOT                                                                  CROOT020
C*      CROOT CALCULATES THE ROOTS OF AN EIGHTH DEGREE POLYNOMIAL       CROOT030
        SUBROUTINE CROOT (A, XO, KODE, X)                               CROOT040
        COMMON     /CRDER/  C, K, M                                     CROOT050
        COMPLEX    A(9), C(9), XO(8), X(8), X1,ROUND, CXO               CROOT060
        EXTERNAL   POL                                                  CROOT070
        DATA       CXO/(0.,0.)/                                         CROOT075
                                                                        CROOT080
        K = 1                                                           CROOT090
        DO 100 I = 1, 9                                                 CROOT100
  100   C(I) = A(I)                                                     CROOT110
  110   IF (CABS(C(1)).NE. 0.)  GO TO 130                               CROOT120    12
        X(K) = (0.,0.)                                                  CROOT130
        K = K + 1                                                       CROOT140
        IF (K .GT. 8)  GO TO 280                                        CROOT150
        M = 10 - K                                                      CROOT160
        DO 120 I = 1, M                                                 CROOT170
  120   C(I) = C(I+1)                                                   CROOT180
        GO TO 110                                                       CROOT190
                                                                        CROOT200
C.....C O M P U T E    K-TH    R O O T.....                             CROOT210
  130   X1 = (.5,.5)                                                    CROOT220
        IF (KODE .NE. 0)  X1 = XO(K)                                    CROOT230
                                                                        CROOT240
C.....X1 = INTIAL GUESS, USE MULLERS METHOD TO REFINE IT.....           CROOT250
        N = 10 - K                                                      CROOT260
        CALL MULLER (POL, X1, 20, 1.E-8, JUNK, X(K), N)                 CROOT270    36
        X1 = (.5, -.5)                                                  CROOT280
        IF (N .GE. 20)  CALL MULLER (POL, X1, 20, 1.E-8, JUNK, X(K), N) CROOT290    40
        X(K) = ROUND(X(K))                                              CROOT300    43
        K = K + 1                                                       CROOT310
        IF (K .GT. 8)  GO TO 280                                        CROOT320
                                                                        CROOT330
C.....R E D U C E    C O E F F I C I E N T S.....                       CROOT340
        DO 240 I = 2, M                                                 CROOT350
  240   C(I) = C(I) + X(K-1)*C(I-1)                                     CROOT360
        IF (K .NE. 8)  GO TO 130                                        CROOT370
        IF (CABS(C(1)) .NE. 0.)  GO TO 250                              CROOT380    62
        X(8) = CXO                                                      CROOT390
        GO TO 280                                                       CROOT400
  250   X(8) = -C(2)/C(1)                                               CROOT410
        X(8) = ROUND( X(8) )                                            CROOT415
                                                                        CROOT420
C.....E X I T.....                                                      CROOT430    68
  280   DO 290 I = 1, 8                                                 CROOT440
  290   XO(I) = X(I)                                                    CROOT450
        KCDE = 1                                                        CROOT460
        RETURN                                                          CROOT470
        END                                                             CROOT480
```

```
$IBFTC MULER.  DECK

CMULLER     ***** MULLERS METHOD FOR ROOT FINDING  ****                MULER020
C*                                                                     MULER030
C*                          G.V. ROBERTS                               MULER040
C*                            04.24.68                                 MULER050
C*********************************************************             MULER060
      SUBROUTINE MULLER (F, XC, MAX, EPSLON, KODE, X, N)               MULER070
                                                                       MULER080
      COMPLEX   F, X, X0, X1, X2, X3, H2, L2, D2, G, FX, FX1, FX2, D,  MULER090
     .           TWO, ONE, GPD, GMD, L3, FX3, H1                       MULER100
      DATA       TWO, ONE / (0.02,0.), (0.01,0.) /                     MULER110
                                                                       MULER120
      FX   = F(X0)                                                     MULER130    2
      X2   = X0                                                        MULER140
      KODE = 0                                                         MULER150
      IF (CABS(X) .EQ. 0.)  GO TO 190                                  MULER160    4
      FX1 =  F(1.02*X0)                                                MULER170    8
      FX2  = F(1.01*X0)                                                MULER180    9
      H2   = -0.01*X0                                                  MULER190
      GO TO 220                                                        MULER200
  190 FX1  = F(TWO)                                                    MULER210   12
      FX2  = F(ONE)                                                    MULER220   13
      H2   = -0.01                                                     MULER230
  220 L2   = -0.50                                                     MULER240
      D2   = 0.50                                                      MULER250
                                                                       MULER260
C.....BEGIN ITERATIONS.....                                            MULER270
      DO 540 K = 1, MAX                                                MULER280
      N    = K                                                         MULER290
      G    = FX*L2*L2 - FX1*D2*D2 + FX2*(L2 + D2)                      MULER300
      CALL OVERCK                                                      19
      D    = CSQRT (G*G - 4.*FX2*D2*L2*(FX*L2 - FX1*D2 + FX2))         MULER310    1
      GPD = G + D                                                      MULER320
      GMD = G - D                                                      MULER330
      CGPD = CABS(GPD)                                                 MULER340   22
      CGMD = CABS(GMD)                                                 MULER350   23
      IF (CGPD .GT. CGMD) GO TO 360                                    MULER360
      IF (CGMD .EQ. 0.)  GO TO 580                                     MULER370
      L3  = -2.*FX2*D2/GMD                                             MULER380
      GO TO 370                                                        MULER390
  360 IF (CGPD .EQ. 0.)  GO TO 580                                     MULER400
      L3  = -2.*FX2*D2/GPD                                             MULER410
  370 X3 = X2 + L3*H2                                                  MULER420
      FX3 = F(X3)                                                      MULER430   35
      IF (CABS(X2) .EQ. 0.)  GO TO 420                                 MULER440   36
      IF (CABS((X3 - X2)/X2) .GT. EPSLON)  GO TO 450                   MULER450   40
      CALL OVERCK                                                      44
  390 X = X3                                                           MULER460
      GO TO 570                                                        MULER470
  420 IF (CABS(FX3) .LE. EPSLON)  GO TO 390                            MULER480
                                                                       MULER490
```

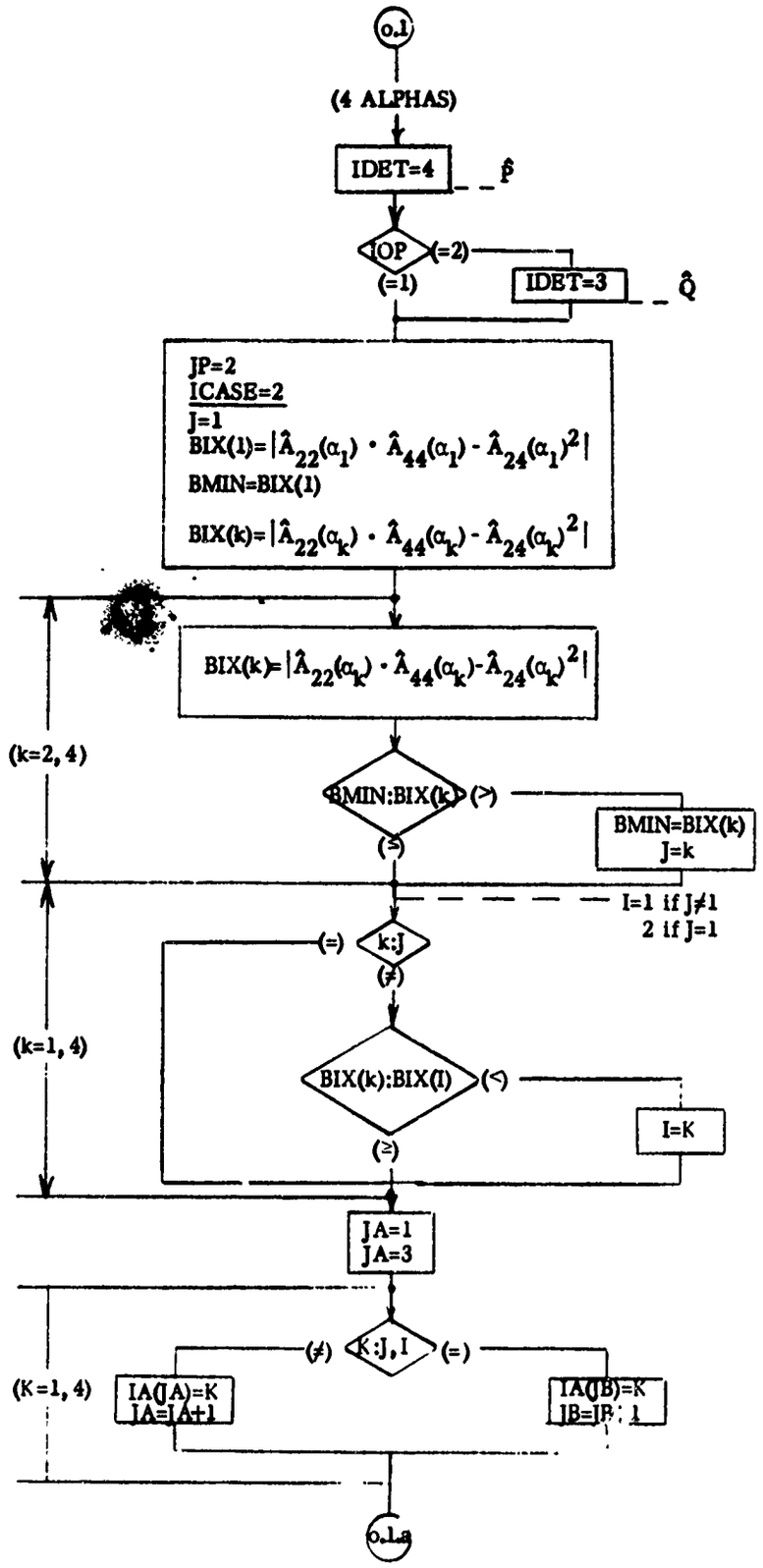
o.1
(4 ALPHAS)
IDET=4
$\hat{P}$
IOP
(=2)
(=1)
IDET=3
$\hat{Q}$
JP=2
ICASE=2
J=1
BIX(1)=$|\hat{A}_{22}(\alpha_1) \cdot \hat{A}_{44}(\alpha_1) - \hat{A}_{24}(\alpha_1)^2|$
BMIN=BIX(1)
BIX(k)=$|\hat{A}_{22}(\alpha_k) \cdot \hat{A}_{44}(\alpha_k) - \hat{A}_{24}(\alpha_k)^2|$
BIX(k)=$|\hat{A}_{22}(\alpha_k) \cdot \hat{A}_{44}(\alpha_k) - \hat{A}_{24}(\alpha_k)^2|$
(k=2, 4)
BMIN:BIX(k)
(>)
(≤)
BMIN=BIX(k)
J=k
I=1 if J≠1
2 if J=1
k:J
(=)
(≠)
(k=1, 4)
BIX(k):BIX(I)
(<)
(≥)
I=K
JA=1
JA=3
K:J,I
(≠)
(=)
(K=1, 4)
IA(JA)=K
JA=JA+1
IA(JB)=K
JB=JB+1
o.1a

```
C.....ACT CONVERGENT YET.....                                    MULER500   48
  450 FX  = FX1                                                  MULER510
      FX1 = FX2                                                  MULER520
      FX2 = FX3                                                  MULER530
      X = X1                                                     MULER540
      X1  = X2                                                   MULER550
      X2  = X3                                                   MULER560
      H1  = H2                                                   MULER570
      H2 = X2 - X1                                               MULER580
      L2 = H2/H1                                                 MULER590
  540 D2  = 1. + L2                                              MULER600
      KCDE= 2                                                    MULER610
      X   = X2                                                   MULER620
  570 RETURN                                                     MULER630
  580 X = X2                                                     MULER640
      GO TO 570                                                  MULER650
      END                                                        MULER660
```

```
$IBFTC POL...  DECK

CPOL
      COMPLEX FUNCTION POL (X)                                  POL00020
      COMMON /ORDER/  C, K, M                                   POL00030
      COMPLEX T, C(9), X                                        POL00040
      POL = (0.,0.)                                             POL00050
      T   = (1.,0.)                                             POL00060
      J   = M                                                   POL00070
      DO 100 I = 1, M                                           POL00080
      POL = POL + C(J)*T                                        POL00090
      CALL CVERCK                                               POL00100
      T   = T*X                                                 POL00110
  100 J   = J - 1                                               POL00120
      RETURN                                                    POL00130
      END                                                       POL00140
```

```
$IBFTC TFUN..  DECK

CTFUN                                                                   TFUN0020
      COMPLEX FUNCTION TFUN (ETA, WX, C1, C2, C3, C4, C5, C6, C7, C8)   TFUN0030
      COMMON    /LINK/   JUNK1(244), ALFAB(4), JUNK2(36), BETAB(4,4),   TFUN0040
     .                  JUNK3(8), VS, JUNK4(17)                         TFUN0050
     .          /CIA /   IA(4)                                          TFUN0060
      COMPLEX   ALFAB, BETAB, ETA(4)                                    TFUN0070
                                                                        TFUN0080
      CEBUG ETA,WX,C1,C2,C3,C4,C5,C6,C7,C8
      TFUN = (0.,0.)                                                    TFUN0090
      DO 80 K = 1, 4                                                    TFUN0100
      I = IA(K)                                                         TFUN0110
      CEBUG I
      CEBUG TFUN
   80 TFUN = TFUN + ETA(K)*(                                            TFUN0120
     .      - BETAB(1,K)*(CMPLX(0.,C1) + ALFAB(I)*C2)/VS                TFUN0130
     .      - BETAB(2,K)*(CMPLX(0.,C3) + ALFAB(I)*C4)/VS                TFUN0140
     .      - BETAB(3,K)*(CMPLX(0.,C5) + ALFAB(I)*C6)/VS                TFUN0150
     .      - BETAB(4,K)*(CMPLX(0.,C7) + ALFAB(I)*C8)/VS )              TFUN0160
     .      *            CEXP(-ALFAB(I)*WX/VS)                          TFUN0170    17
      CEBUG TFUN
      RETURN                                                            TFUN0180
      END                                                               TFUN0190
```

```
$IBFTC P1FUN.  DECK

CP1FUN                                                                  P1FUN020
      COMPLEX FUNCTION P1FUN (ETA, C1,  C2,  C3,  C4,  C5,  C6,  C7,    P1FUN030
     .                        C8,  C9,  C10, C11, C12, C13, C14, C15,   P1FUN040
     .                        C16, C17, C18, C19, C20, C21, C22, C23,   P1FUN050
     .                        C24)                                      P1FUN060
      COMMON  /LINK/ JUNK1(244), ALFAB(4), JUNK2(36), BETAB(4,4),       P1FUN070
     .               JUNK3(26)     /BETAN/  NBETA                       P1FUN080
     .        /CIA / IA(4)                                              P1FUN090
      COMPLEX ALFAB, BETAB, ETA(4), J                                   P1FUN100
      DATA    J / (0.,1.) /                                             P1FUN110
                                                                        P1FUN120
      NK4 = NBETA + 1                                                   P1FUN130
      P1FUN = (0.,0.)                                                   P1FUN140
      DO 230 I = 1, 4                                                   P1FUN150
      L = IA(I)                                                         P1FUN160
      DO 230 K = 1, NK4                                                 P1FUN170
      M = IA(K)                                                         P1FUN180
      P1FUN=P1FUN + (ETA(I)*CONJG(ETA(K))/(ALFAB(L) + CONJG(ALFAB(M))))  P1FUN190
     .     *(CONJG(BETAB(1,K))*(BETAB(1,I)*(C1 - J*C2*ALFAB(L))         P1FUN200
     .     + BETAB(2,I)*(C3 - J*ALFAB(L)*C4)                            P1FUN210
     .     + BETAB(3,I)*(C5 - J*ALFAB(L)*C6)                            P1FUN220
     .     + BETAB(4,I)*(C7 - J*ALFAB(L)*C8))                           P1FUN230
     .     + CONJG(BETAB(2,K))*(BETAB(1,I)*(C9 - J*ALFAB(L)*C10)        P1FUN240
     .     + BETAB(2,I)*(C11 - J*ALFAB(L)*C12)                          P1FUN250
     .     + BETAB(3,I)*(C13 - J*ALFAB(L)*C14)                          P1FUN260
     .     + BETAB(4,I)*(C15 - J*ALFAB(L)*C16))                         P1FUN270
     .     + CONJG(BETAB(3,K))*(BETAB(1,I)*(C17 - J*ALFAB(L)*C18)       P1FUN280
     .     + BETAB(2,I)*(C19 - J*ALFAB(L)*C20)                          P1FUN290
     .     + BETAB(3,I)*(C21 - J*ALFAB(L)*C22)                          P1FUN300
     .     + BETAB(4,I)*(C23 - J*ALFAB(L)*C24)))                        P1FUN310
  230 CONTINUE                                                          P1FUN320
      P1FUN = P1FUN/2.                                                  P1FUN330
      RETURN                                                            P1FUN340
      END                                                               P1FUN350
```

```
$IBFTC CDET..  DECK

CCDET          SUBROUTINE CDET          6-12-68                          CDET0000
C           DETERMINANT OF COMPLEX MATRIX.     DET(A) = F * 10**M        CDET0001
      SUBROUTINE CDET(A,N,F,M)                                             0001
      DATA PI/3.14159265/                                                  0002
      DIMENSION A(N,N),S(2)                                                0003
      COMPLEX A,F,B                                                        0004
      EQUIVALENCE (S,PHI,B),(S(2),SUM)                                     0005
      ALOGB2(X)=ALOG(X)/ALOG(2.)                                              2     3
      SGN = 1.                                                             0006
 6    DO 15 I=2,N                                                          0007
      II=I-1                                                               0008
      DO 15 J=1,II                                                         0009
 8    IF(REAL(A(I,J)).EQ.0..AND.AIMAG(A(I,J)).EQ.0.) GO TO 15              0010
 9    IF (REAL(CABS(A(J,J))) - REAL(CABS(A(I,J)))) 11,10,10                0011    20    22
 11   DO 12 K=J,N                                                          0012
      B = A(J,K)                                                           0013
      A(J,K)=A(I,K)                                                        0014
 12   A(I,K) = B                                                           0015
      SGN = - SGN                                                          0016
      IF (REAL(A(I,J)).EQ.0..AND.AIMAG(A(I,J)).EQ.0.) GO TO 15             0017
 10   B = A(I,J)/A(J,J)                                                    0018
      JJ=J+1                                                               0019
      DO 14 L=JJ,N                                                         0020
 14   A(I,L) = A(I,L) - B*A(J,L)                                           0021
 15   CONTINUE                                                             0022
 16   SUM=0.                                                               0023
      PHI=0.                                                               0024
      DO 20 I=1,N                                                          0025
      IF(REAL(A(I,I)).EQ.0..AND.AIMAG(A(I,I)).EQ.0.) GO TO 18              0026
      SUM = SUM + ALOGB2(REAL(CABS(A(I,I))))                               0027    63
 20   PHI=PHI+ATAN2(AIMAG(A(I,I)), REAL(A(I,I)))/PI                        0028    67
      SUM = SUM*.301029996                                                 0029
      PHI = PI*PHI                                                         0030
      F=CMPLX(COS(PHI),SIN(PHI))                                           0031    70    71
      S = ABS(SUM) - 37.                                                   0032
      IF (S.LE.0.)  GO TO 100                                              0033
      M = SIGN(S,SUM)                                                      0034
      F = F*10.**(SUM-FLOAT(M))                                            0035    76
      GO TO 200                                                            0036
 100  M = 0                                                                0037
      F = F*10.**SUM                                                       0038    80
 200  IF (SGN.GT.0.) RETURN                                                0039
      F = - F                                                              0040
      RETURN                                                               0041
 18   M = 0                                                                0042
      F=(0.,0.)                                                            0043
      RETURN                                                               0044
      END                                                                  0045
```

```
$IBFTC CMATS.  DECK

CCMATS          SUBRCUTINE CMATS          6-12-68                          CMATS020
C             SOLUTICN OF COMPLEX LINEAR EQUATICNS                         CMATS030
       SUBROUTINE CMATS(A,X,N1,M1,*)                                       CMATS040
       DIMENSION A(N1,50),X(N1,M1)                                         CMATS050
      CCMPLEX          A,X,R                                               CMATS060
       M=M1                                                                CMATS070
       N=N1                                                                CMATS080
      IF (M)  199,199,5                                                    CMATS090
 5    NM1 = N - 1                                                          CMATS100
      IF (NM1)  199,160,6                                                  CMATS110
 6    MM=N+M                                                               CMATS120
      II = 1                                                               CMATS130
      DC 155 I=2,N                                                         CMATS140
      DC15 J=1,II                                                          CMATS150
      IF (REAL(A(I,J)) .EQ. 0. .AND. AIMAG(A(I,J)) .EC. 0.)  GO TO 15      CMATS160
      IF (      CABS(A(J,J))  -       CABS(A(I,J)))   11,10,10            CMATS170    22    24
 11   DC 12 K=J,MM                                                         CMATS180
      R = A(J,K)                                                           CMATS190
      A(J,K)=A(I,K)                                                        CMATS200
 12   A(I,K) = R                                                           CMATS210
      IF (REAL(A(I,J)) .EQ. 0. .AND. AIMAG(A(I,J)) .EQ. 0.)  GO TO 15      CMATS220
 10   R = -A(I,J)/A(J,J)                                                   CMATS230
      JJ = J + 1                                                           CMATS240
      DC14 K=JJ,MM                                                         CMATS250
 14   A(I,K) = A(I,K) + R*A(J,K)                                           CMATS260
      A(I,J) = (0.,0.)                                                     CMATS270
   15 CCNTINUE                                                             CMATS280
 155  II = I                                                               CMATS290
 160  DC 166 I=1,N                                                         CMATS300
 166  IF (REAL(A(I,I)) .EQ.0. .AND. AIMAG(A(I,I)) .EC. 0.)  RETURN 1       CMATS310
      DC 28 J=1,M                                                          CMATS320
      KK=N+J                                                               CMATS330
      X(N,J)=A(N,KK)/A(N,N)                                                CMATS340
      IF (NM1)  287,25,287                                                 CMATS350
 287  JJ = N                                                               CMATS360
      DC 289 I=2,N                                                         CMATS370
      II = JJ                                                              CMATS380
      JJ = JJ - 1                                                          CMATS390
      R = (0.,0.)                                                          CMATS400
      DO 25 K=II,N                                                         CMATS410
 25   R = R + A(JJ,K)*X(K,J)                                               CMATS420
 289  X(JJ,J) = (A(JJ,KK) - R)/A(JJ,JJ)                                    CMATS430
  28  CCNTINUE                                                             CMATS440
      RETURN                                                               CMATS450
 199  RETURN 1                                                             CMATS460
      END                                                                  CMATS470
```

```
$IBFTC OVRDK   DECK

      SUBRCUTINE OVERCK
      CCMMON/OVR/KO,NI
      ECUIVALENCE (IAND,XAND)
      CCMMCN KOUNT(1)
      CATA MASK/C0000000077777/
      KC=0
      XANE=AND(MASK,KOUNT(11))
      KNTFPT=IAND+239
      KATSAV=KOUNT(KNTFPT)
      KNT1=KNTSAV/32768
      KNT2=KNTSAV-32768*KNT1
      IF(KNT2.LE.1)RETURN
      KCUNT(KNTFPT)=32769*KNT1+1
      KG=1
      RETURN
      END
```

LINB03 STORAGE MAP

MAIN PROGRAM

COMMON VARIABLES

COMMON BLOCK	ROTAT	ORIGIN	00001	LENGTH	00001			
SYMBOL	LOCATION	TYPE	SYMBOL	LOCATION	TYPE	SYMBOL	LOCATION	TYPE
RCTATE	00000	L						
COMMON BLOCK	GET	ORIGIN	00002	LENGTH	00001			
GETOUT	00000	L						
COMMON BLOCK	PLOTS	ORIGIN	00003	LENGTH	00001			
ICHECK	00000	L						
COMMON BLOCK	OVR	ORIGIN	00004	LENGTH	00002			
KO	00000	I	NI	00001	I			
COMMON BLOCK	ZZTZ	ORIGIN	00006	LENGTH	00052			
CC	00000	R	CE	00024	R	CT	00045	R
C11	00000	R	C13	00001	R	C14	00002	R
C15	00003	R	C33	00004	R	C34	00005	R
C35	00006	R	C36	00007	R	C44	00010	R
C45	00011	R	C46	00012	R	C55	00013	R
C56	00014	R	C66	00015	R	C16	00016	R
C12	00017	R	C25	00020	R	C26	00021	R
C24	00022	R	C23	00023	R	E11	00024	R
E13	00025	R	E14	00026	R	E15	00027	R
E16	00030	R	E31	00031	R	E33	00032	R
E34	00033	R	E35	00034	R	E36	00035	R
E12	00036	R	E32	00037	R	E21	00040	R
E23	00041	R	E24	00042	R	E25	00043	R
E26	00044	R	T11	00045	R	T13	00046	R
T33	00047	R	T21	00050	R	T23	00051	R
COMMON BLOCK	LINK	ORIGIN	00060	LENGTH	00532			
ALFA	00000	C	ALFAI	00020	C	EL	00040	C
ALFAA	00350	C	ALFAB	00364	C	BETAA	00374	C
BETAB	00440	C	EPSC	00500	R	MUA	00501	R
LAMDAA	00502	R	RHOA	00503	R	MUB	00504	R
LAMDAB	00505	R	NUB	00506	R	RHOB	00507	R
VS	00510	R	KS	00511	I	EPSLON	00512	R
DIGIT	00513	R	WH	00514	R	WXA	00515	R
WXB	00516	R	KL	00517	I	KW	00520	I
ALL	00521	L	ROOTS	00522	L	ITER	00523	I
COEFF	00524	L	DETERM	00525	L	POLY	00526	L
ALPHA	00527	L	BETA	00530	L	MAX	00531	I
COMMON BLOCK	GPEPS	ORIGIN	00612	LENGTH	00060			
G	00000	R	P	00025	R	EPS	00047	R
COMMON BLOCK	FLAG	ORIGIN	00672	LENGTH	00001			
FACE	00000	L						
COMMON BLOCK	PTAN	ORIGIN	00673	LENGTH	00001			

NBETA	00000	I							
		COMMON BLOCK	CSET		ORIGIN	00674	LENGTH	00003	
CLIM	00000	R		ELIP	00001	R	TLIM	00002	R
		COMMON BLOCK	FROOT		ORIGIN	00677	LENGTH	00003	
FVSMAG	00000	R		NT	00001	I	ICASE	00002	I
		COMMON BLOCK	CGM		ORIGIN	00702	LENGTH	00002	
ACAP	00000	L		EPSR	00001	R			
		COMMON BLOCK	CIA		ORIGIN	00704	LENGTH	00004	
IA	00000	I							
		COMMON BLOCK	ALESS		ORIGIN	00710	LENGTH	00001	
IALF	00000	L							
		COMMON BLOCK	CIFL		ORIGIN	00711	LENGTH	00001	
HXAGNL	00000	L							

DIMENSIONED PROGRAM VARIABLES

SYMBOL	LOCATION	TYPE	SYMBOL	LOCATION	TYPE	SYMBOL	LOCATION	TYPE
PANGLE	01470	R	XX	01755	R	YY	01757	R
DELTA	01761	R	RTI1	02246	R	RITI1	02533	R
RUI	03020	R	RIU1	03305	R	RE1	03572	R
REI1	04057	R	DETRAY	04344	R	DETIAY	04510	R
VSARAY	04654	R	AAAAA	05020	R	DISP	05330	C
DEG	05340	R	TITLES	01464	R	VELOC	00712	R
VELOCI	01177	R	VEL	00712	R	PLOTIT	05625	I
XEL	05633	C	XL	05655	C	XET	05671	C
EA	05675	C	EB	05711	C	UA	05721	C
UB	05727	C	ETA	05735	C	EX	05761	C
MAGU	05771	R	PHASEU	05775	R	TITLE	01464	R

UNDIMENSIONED PROGRAM VARIABLES

SYMBOL	LOCATION	TYPE	SYMBOL	LOCATION	TYPE	SYMBOL	LOCATION	TYPE
BLIMIT	06001	I	ELIMIT	06002	I	NEGAT	06003	L
MUIT	06004	L	FXL	06005	C	FVS	06007	C
PHIB	06011	C	CXO	06013	C	CX1	06015	C
U	06017	C	PIM	06021	C	P2M	06023	C
TW31	06025	C	TW32	06027	C	TW33	06031	C
TW11	06033	C	TW12	06035	C	TW22	06037	C
S11	06041	C	S22	06043	C	S33	06045	C
S12	06047	C	S13	06051	C	S23	06053	C
D1	06055	C	D2	06057	C	D3	06061	C
JIMAG	06063	C	E1	06065	C	E3	06067	C
NUA	06071	R	NUMAX	06072	R	REPEAT	06073	L
WX	06074	R	DVS	06075	R	VSMAX	06076	R
DNU	06077	R	DWX	06100	R	WXMAX	06101	R
JJJK	06102	I	I	06103	I	VSAVE	06104	R
KOUNT	06105	I	KCNT	06106	I	KNT1	06107	I
KNT2	06110	I	KNT3	06111	I	KTIME	06112	I

LINB03 STORAGE MAP

SNU	06113	R	SWX	06114	R	COA	06115	R
VS1	06116	R	VS2	06117	R	AN1	06120	R
AN2	06121	R	COB	06122	R	VSO	06123	R
N	06124	I	VS1	06125	R	EL1	06126	R
EL2	06127	R	KGO	06130	I	NBETA1	06131	I
M1	06132	I	K	06133	I	M2	06134	I
J	06135	I	YMIN	06136	R	DY	06137	R
DMIN	06140	R	RTMIN	06141	R	DR	06142	R
SPEC1	06143	R	TT31	06144	R	TT32	06145	R
TT33	06146	R	TT11	06147	R	TT12	06150	R
TT22	06151	R	SS11	06152	R	SS22	06153	R
SS33	06154	R	SS12	06155	R	SS13	06156	R
SS23	06157	R	PP1M	06160	R	PP2M	06161	R
DD1	06162	R	DD2	06163	R	DD3	06164	R
UU1	06165	R	UU2	06166	R	UU3	06167	R
EE1	06170	R	EE3	06171	R	RRRR	06172	R
RIII	06173	R	INCR	06174	I	VSO	06175	R
JJ	06176	I	JJJ	06177	I	NNNNN	06200	I
XMIN	06201	R	DX	06202	R			

ENTRY POINTS

.....	SECTION	17

SUBROUTINES CALLED

TFUN	SECTION	18	P1FUN	SECTION	19	.FADD.	SECTION	20
SKFILE	SECTION	21	CRTPLT	SECTION	22	PLOT	SECTION	23
.FRCU.	SECTION	24	SETCTE	SECTION	25	ROOT	SECTION	26
.CFCP.	SECTION	27	.FWRD.	SECTION	28	.FSLO.	SECTION	29
.FPUN.	SECTION	30	CMATS	SECTION	31	CABS	SECTION	32
.CFMP.	SECTION	33	CEXP	SECTION	34	OVERCK	SECTION	35
SCALE	SECTION	36	AXIS	SECTION	37	LINE	SECTION	38
.FEFT.	SECTION	39	ATAN2	SECTION	40	SQRT	SECTION	41
ATAN	SECTION	42	COS	SECTION	43	SIN	SECTION	44
ENDPLT	SECTION	45	.FXEM.	SECTION	46	.UNO5.	SECTION	47
.FRTN.	SECTION	48	.FCNV.	SECTION	49	.UNO6.	SECTION	50
.FFIL.	SECTION	51	.UNO2.	SECTION	52	E.1	SECTION	53
E.2	SECTION	54	E.3	SECTION	55	E.4	SECTION	56
CC.1	SECTION	57	CC.2	SECTION	58	CC.3	SECTION	59
CC.4	SECTION	60	SYSLOC	SECTION	61			

EFN IFN CORRESPONDENCE

EFN	IFN	LOCATION	EFN	IFN	LOCATION	EFN	IFN	LOCATION
7773	FORMAT	06427	7774	7A	07565	20	11A	07570
510	22A	07677	1	FORMAT	06430	520	35A	07725
7	FORMAT	06432	530	45A	07754	535	50A	10006
2	622A	15561	550	58A	10036	17	434A	12754
32	70A	10065	615	74A	10102	650	FORMAT	06435
1500	FORMAT	06433	1502	FORMAT	07342	17C7	277A	11630
660	114A	10404	17C8	263A	11572	1705	FORMAT	07102
1240	175A	11120	1C0C	141A	10713	50	122A	10426

100	131A	10534	60	127A	10473	110	139A	10666
105	137A	10641	174C	451A	13006	1100	152A	11017
1010	145A	10740	1095	146A	10776	1120	FORMAT	06732
1800	460A	13040	1310	188A	11155	1300	184A	11143
1340	195A	11167	149C	239A	11463	1480	237A	11457
1460	223A	11360	152C	245A	11472	1550	FORMAT	0677J
1706	278A	11636	1710	306A	11716	38	288A	11656
1709	305A	11714	35	292A	11666	34	336A	12106
36	333A	12075	87	363A	12240	86	343A	12113
37	381A	12375	75	375A	12471	76	419A	12654
74	433A	12750	175C	FORMAT	07103	1790	459A	13032
1810	465A	13044	189C	489A	13210	1650	476A	13126
57	502A	13362	71	516A	13542	2190	537A	14016
2310	551A	14345	73	564A	14462	2340	FORMAT	07121
2440	FORMAT	07125	1506	FORMAT	07344	18	591A	15443
72	601A	15502	2441	FORMAT	07347	3	FORMAT	07370
4	640A	15717	32767	FORMAT	07371	5	687A	16041

THE FIRST LOCATION NOT USED BY THIS PROGRAM IS 16216.

STORAGE MAP

SUBROUTINE ROOT

COMMON VARIABLES

	COMMON BLOCK		GET	ORIGIN	00001	LENGTH	00001	
SYMBOL	LOCATION	TYPE	SYMBOL	LOCATION	TYPE	SYMBOL	LOCATION	TYPE
GETOUT	00000	L						
	COMMON BLOCK		PLOTS	ORIGIN	00002	LENGTH	00001	
ICHECK	00000	L						
	COMMON BLOCK		FROOT	ORIGIN	00003	LENGTH	00003	
FVSMAG	00000	R	NT	00001	I	ICASE	00002	I
	COMMON BLOCK		ALESS	ORIGIN	00006	LENGTH	00001	
IALF	00000	L						

DIMENSIONED PROGRAM VARIABLES

SYMBOL	LOCATION	TYPE	SYMBOL	LOCATION	TYPE	SYMBOL	LOCATION	TYPE
SUB	00007	R						

UNDIMENSIONED PROGRAM VARIABLES

SYMBOL	LOCATION	TYPE	SYMBOL	LOCATION	TYPE	SYMBOL	LOCATION	TYPE
PREV	00037	L	FX0	00040	C	FX1	00042	C
FX2	00044	C	FX3	00046	C	G2	00050	C
LAMDA3	00052	C	T	00054	C	T1	00056	C
T2	00060	C	EL	00062	C	LAMDA2	00064	R
KKKKK	00065	I	FACT1	00066	R	FACT2	00067	R
X2	00070	R	H2	00071	R	DELTA2	00072	R
H3	00073	R	KICK	00074	I	TEN10	00075	R

ENTRY POINTS

ROOT	SECTION	6

SUBROUTINES CALLED

F	SECTION	7	ROUND	SECTION	8	.XP2.	SECTION	9
.CFMP.	SECTION	10	CSQRT	SECTION	11	CABS	SECTION	12
.CFCP.	SECTION	13	.FWRD.	SECTION	14	.UNO6.	SECTION	15
.FFIL.	SECTION	16	.FCNV.	SECTION	17	E.1	SECTION	18
E.2	SECTION	19	E.3	SECTION	20	E.4	SECTION	21
SYSLOC	SECTION	22						

EFN IFN CORRESPONDENCE

EFN	IFN	LOCATION	EFN	IFN	LOCATION	EFN	IFN	LOCATION

```
                LINBO3   CONWAY      PHASE                N4
          ROOT..                                  STORAGE  MAP                  12/31/69    000109      PAGE  53
600        70A          01016            530        65A          01007          230          39A          00353
300        49A          0C653            10CC       FORMAT       00132          998          82A          01055
999        83A          01060
 THE FIRST LOCATION NOT USED BY THIS PROGRAM IS 01167.
```

SUBROUTINE SETCTE

COMMON VARIABLES

COMMON BLOCK			ROTAT	ORIGIN	00001	LENGTH	00001	
SYMBOL	LOCATION	TYPE	SYMBOL	LOCATION	TYPE	SYMBOL	LOCATION	TYPE
ROTATE	00000	L						
COMMON BLOCK			ZZTZ	ORIGIN	00002	LENGTH	00052	
C	00000	R	E	00024	R	T	00045	R
COMMON BLOCK			FRT	ORIGIN	00054	LENGTH	00352	
GAMMA	00000	D	D	00022	D	Q	00264	D
COMMON BLOCK			GPEPS	ORIGIN	00426	LENGTH	00060	
G	00000	R	P	00025	R	EPSLON	00047	R
COMMON BLOCK			CSET	ORIGIN	00506	LENGTH	00003	
CLIM	00000	R	ELIM	00001	R	TLIM	00002	R
COMMON BLOCK			CSET1	ORIGIN	00511	LENGTH	00005	
AC12	00000	L	AC23	00001	L	AC24	00002	L
AC14	00003	L	AC34	00004	L			
COMMON BLOCK			BETAN	ORIGIN	00516	LENGTH	00001	
NBETA	00000	I						

DIMENSIONED PROGRAM VARIABLES

SYMBOL	LOCATION	TYPE	SYMBOL	LOCATION	TYPE	SYMBOL	LOCATION	TYPE
CPR	00517	R	EPR	00563	R	EPSPR	00605	R
LABE	00616	I	LABC	00624	I	LABT	00631	I

UNDIMENSIONED PROGRAM VARIABLES

SYMBOL	LOCATION	TYPE	SYMBOL	LOCATION	TYPE	SYMBOL	LOCATION	TYPE
DR	00637	D	RM	00641	D	RN	00643	D
RL	00645	D	CM	00647	D	SM	00651	D
CN	00653	D	SN	00655	D	CL	00657	D
SL	00661	D	I	00663	I	K	00664	I

ENTRY POINTS

SETCTE	SECTION	9

SUBROUTINES CALLED

FF	SECTION	10	R	SECTION	11	TIJ	SECTION	12
CSFUN	SECTION	13	.FWRC.	SECTION	14	.FSLO.	SECTION	15
.UNC6.	SECTION	16	.FFIL.	SECTION	17	.FCNV.	SECTION	18

SYSLCC SECTION 19

EFN IFN CORRESPONDENCE

EFN	IFN	LOCATION	EFN	IFN	LOCATION	EFN	IFN	LOCATION
1601	52A	02326	1C	60A	02337	1602	101A	02731
20	109A	02742	1603	129A	03101	30	137A	03112
470	148A	03125	490	151A	03131	1595	FORMAT	00715
1604	224A	03430	160C	FORMAT	00702			

THE FIRST LOCATION NOT USED BY THIS PROGRAM IS 03464.

```
          LINB03   CONWAY     PHASE          N4                          12/31/69   000109     PAGE  56
     ROUND.                                STORAGE  MAP

                                   FUNCTION    ROUND       TYPE     C

                                       UNDIMENSIONED PROGRAM VARIABLES

SYMBOL      LOCATION      TYPE          SYMBOL      LOCATION      TYPE          SYMBOL      LOCATION      TYPE
F.000C       00001         C             I            00003         R            R            00004         R

                                                ENTRY POINTS

     ROUND       SECTION     2

                                                SUBROUTINES CALLED

     SYSLOC      SECTION     3

                                          EFN   IFN   CORRESPONDENCE

EFN         IFN         LOCATION        EFN         IFN         LOCATION        EFN         IFN         LOCATION
100         12A         00052           50          9A          00041
 THE FIRST LOCATION NOT USED BY THIS PROGRAM IS 00077.
```

```
CSFUN.   LIN803   CONWAY    PHASE                    .4                                12/31/69   000109    PAGE  57
                                                  STORAGE  MAP

                                        SUBROUTINE  CSFUN

                                            UNDIMENSIONED PROGRAM VARIABLES

SYMBOL      LOCATION      TYPE          SYMBOL      LOCATION      TYPE          SYMBOL      LOCATION      TYPE
X            00001         R

                                                  ENTRY POINTS

     CSFUN       SECTION     2

                                                  SUBROUTINES CALLED

     CSIN        SECTION     3                DCOS        SECTION     4                SYSLOC      SECTION     5

                                              EFN   IFN   CORRESPONDENCE

EFN         IFN         LOCATION        EFN         IFN         LOCATION        EFN         IFN         LOCATION
150         13A         00057           200         17A         00073           100         12A         00056

 THE FIRST LOCATION NOT USED BY THIS PROGRAM IS 00137.
```

FF....

STORAGE MAP

FUNCTION FF TYPE D

COMMON VARIABLES

COMMON BLOCK FRT ORIGIN 00001 LENGTH 00352

SYMBOL	LOCATION	TYPE	SYMBOL	LOCATION	TYPE	SYMBOL	LOCATION	TYPE
GAMMA	0000C	D	D	00022	D	Q	00264	D

UNDIMENSIONED PROGRAM VARIABLES

SYMBOL	LOCATION	TYPE	SYMBOL	LOCATION	TYPE	SYMBOL	LOCATION	TYPE
F.0000	00353	D	R	00355	I	S	00356	I
T	00357	I						

ENTRY POINTS

FF SECTION 3

SUBROUTINES CALLED

SYSLOC SECTION 4

EFN IFN CORRESPONDENCE

EFN	IFN	LOCATION	EFN	IFN	LOCATION	EFN	IFN	LOCATION
50	11A	0C465						

THE FIRST LOCATION NOT USED BY THIS PROGRAM IS 00546.

```
R.        LINBO3   CONWAY      PHASE          N4                          12/31/69    000109      PAGE  59
                                                STORAGE  MAP

                                     FUNCTION    R          TYPE     D

                                          COMMON   VARIABLES

                 COMMON BLOCK      FRT              ORIGIN       00001          LENGTH       00352

SYMBOL      LOCATION      TYPE          SYMBOL      LOCATION      TYPE          SYMBOL      LOCATION      TYPE
GAMMA        000C0         D             D            00022         D             G            00264         D

                                         UNDIMENSIONED PROGRAM VARIABLES

SYMBOL      LOCATION      TYPE          SYMBOL      LOCATION      TYPE          SYMBOL      LOCATION      TYPE
F.000C       00353         D             S            00355         I             T            00356         I

                                                ENTRY POINTS

      R           SECTION     3

                                                SUBROUTINES CALLED

      SYSLOC      SECTION     4

                                          EFN   IFN   CORRESPONDENCE

EFN         IFN         LOCATION        EFN         IFN         LOCATION        EFN         IFN         LOCATION
50          9A          00443
 THE FIRST LOCATION NOT USED BY THIS PROGRAM IS 00515.
```

STORAGE MAP

FUNCTION TIJ TYPE D

COMMON VARIABLES

COMMON BLOCK FRT ORIGIN 00001 LENGTH 00352

SYMBOL	LOCATION	TYPE	SYMBOL	LOCATION	TYPE	SYMBOL	LOCATION	TYPE
GAMMA	00000	D	JUNK	00022	D			

COMMON BLOCK GPEPS ORIGIN 00353 LENGTH 00060

G	00000	R	P	00025	R	EPSLON	00047	R

UNDIMENSIONED PROGRAM VARIABLES

SYMBOL	LOCATION	TYPE	SYMBOL	LOCATION	TYPE	SYMBOL	LOCATION	TYPE
F.0000	00433	D	R	00435	I			

ENTRY POINTS

TIJ SECTION 4

SUBROUTINES CALLED

SYSLOC SECTION 5

EFN IFN CORRESPONDENCE

EFN	IFN	LOCATION	EFN	IFN	LOCATION	EFN	IFN	LOCATION
50	7A	00500						

THE FIRST LOCATION NOT USED BY THIS PROGRAM IS 00545.

```
LINBO3   CONWAY    PHASE        N4                          12/31/65   000109    PAGE  61
F.....                        STORAGE  MAP

                          FUNCTION   F          TYPE    C

                              COMMON   VARIABLES

          COMMON BLOCK    ZZTZ          ORIGIN     00001          LENGTH     00052

SYMBOL    LOCATION   TYPE        SYMBOL    LOCATION   TYPE       SYMBOL     LOCATION   TYPE
CC        00000      R           CE        00024      R          CT         00045      R
C11       00000      R           C13       00001      R          C14        00002      R
C15       00003      R           C33       00004      R          C34        00005      R
C35       00006      R           C36       00007      R          C44        00010      R
C45       00011      R           C46       00012      R          C55        00013      R
C56       00014      R           C66       00015      R          C16        00016      R
E11       00024      R           E13       00025      R          E14        00026      R
E15       00027      R           E16       00030      R          E31        00031      R
E33       00032      R           E34       00033      R          E35        00034      R
E36       00035      R           T11       00045      R          T13        00046      R
T33       00047      R

          COMMON BLOCK    FROOT         ORIGIN     00053          LENGTH     00003
FVSMAG    00000      R           NT        00001      I          ICASE      00002      I

          COMMON BLOCK    BETAN         ORIGIN     00056          LENGTH     00001
NBETA     00000      I

          COMMON BLOCK    CSET1         ORIGIN     00057          LENGTH     00005
AC12      00000      L           AC23      00001      L          AC24       00002      L
AC14      00003      L           AC34      00004      L

          COMMON BLOCK    LINK          ORIGIN     00064          LENGTH     00532
ALFA      00000      C           ALFAI     00020      C          EL         00040      C
ALFAA     00350      C           ALFAB     00364      C          BETAA      00374      C
BETAB     00440      C           EPSC      00500      R          NUA        00501      R
LAMDAA    00502      R           RHOA      00503      R          NUB        00504      R
LAMDAB    00505      R           NUB       00506      R          RHOB       00507      R
VSX       00510      R           KS        00511      I          EPSLON     00512      R
DIGIT     00513      R           WH        00514      R          WXA        00515      R
WXB       00516      R           KL        00517      I          KM         00520      I
ALL       00521      L           ROOTS     00522      L          ITER       00523      L
COEFF     00524      L           DETERM    00525      L          POLYN      00526      L
ALPHA     00527      L           BETA      00530      L          MAX        00531      I
ELL       00040      C

          COMMON BLOCK    CIA           ORIGIN     00616          LENGTH     00004
IA        00000      I

          COMMON BLOCK    COM           ORIGIN     00622          LENGTH     00002
ACAP      00000      L           EPSR      00001      R

          COMMON BLOCK    GPEPS         ORIGIN     00624          LENGTH     00060
XG        00000      R           XP        00025      R          XEPS       00047      R

          COMMON BLOCK    ALESS         ORIGIN     00704          LENGTH     00001
IALF      00000      L
```

STORAGE MAP

COMMON BLOCK CIFL ORIGIN 00705 LENGTH 00001

HXAGN/.	00000	L

DIMENSIONED PROGRAM VARIABLES

SYMBOL	LOCATION	TYPE	SYMBOL	LOCATION	TYPE	SYMBOL	LOCATION	TYPE
EA	00746	C	EB	00762	C	UA	00772	C
UB	01000	C	POLY	01006	C	B1	00706	C
ALF	01030	C	AGLD	01050	C	XEL	01072	C
XXEL	01402	C	BB	01424	C	BB1	01454	C
BETAB1	01476	C	B1A	01506	C	BETAX	01522	C
B1B	01530	C	CA	01570	R	CB	01610	R
CD	01630	R	B1D	00706	R	ALAB	01650	R
IA1	01661	I	IA2	01664	I	LAB	01667	I
BXX	01672	R	NB	01676	I			

UNDIMENSIONED PROGRAM VARIABLES

SYMBOL	LOCATION	TYPE	SYMBOL	LOCATION	TYPE	SYMBOL	LOCATION	TYPE
F.0000	01702	C	FVS	01704	C	JIMAG	01706	C
DA	01710	C	DB	01712	C	DC	01714	C
ALF1	01716	C	ALF2	01720	C	CXO	01722	C
CX1	01724	C	RVS	01726	R	ICB	01727	I
K1	01730	I	K2	01731	I	L1	01732	I
L2	01733	I	IB1	01734	I	IB2	01735	I
I	01736	I	K	01737	I	RA	01740	R
IC	01741	I	K4	01742	I	J	01743	I
TEN	01744	R	TEN10	01745	R	KK	01746	I
KEXP	01747	I	BMIN	01750	R	JA	01751	I
J1	01752	I	J2	01753	I	N1	01754	I
JB	01755	I	I1	01756	I	I2	01757	I
TERM	01760	R	CA22	01761	R	CAMIN	01762	R
II1	01763	I	II2	01764	I	II3	01765	I
II4	01766	I	L	01767	I	ST	01770	R
ICB1	01771	I	OD	01772	R			

ENTRY POINTS

F	SECTION	12

SUBROUTINES CALLED

.CFMP.	SECTION	13	STRIP	SECTION	14	CPCOT	SECTION	15
CSQRT	SECTION	16	.CFDP.	SECTION	17	CABS	SECTION	18
.FWRD.	SECTION	19	CMATS	SECTION	20	CDET	SECTION	21
.CXP1.	SECTION	22	COSH	SECTION	23	SINH	SECTION	24
TANH	SECTION	25	CEXP	SECTION	26	.FXEM.	SECTION	27
.UNO6.	SECTION	28	.FFIL.	SECTION	29	.FCNV.	SECTION	30
E.1	SECTION	31	E.2	SECTION	32	E.3	SECTION	33
E.4	SECTION	34	SYSLOC	SECTION	35			

F.....

STORAGE MAP

EFN IFN CORRESPONDENCE

EFN	IFN	LOCATION	EFN	IFN	LOCATION	EFN	IFN	LOCATION
490	29A	03324	520	54A	03525	510	51A	03522
525	58A	03527	528	FORMAT	02063	789	74A	03563
630	94A	03624	610	87A	03636	640	132A	03732
637	130A	03721	631	107A	03651	634	124A	03710
400	560A	06325	636	126A	03713	140	373A	05340
632	117A	03666	633	FORMAT	02075	1357	739A	10262
280	501A	06042	638	FORMAT	02106	788	FORMAT	02131
810	143A	03766	980	303A	04734	940	286A	04635
830	184A	04170	820	174A	04141	100	322A	05003
200	408A	05451	975	FORMAT	02156	850	204A	04265
840	198A	04246	900	243A	04446	860	212A	04314
870	217A	04333	875	FORMAT	02142	1960	935A	12524
880	233A	04410	890	238A	04430	910	248A	04465
930	270A	04553	920	264A	04537	974	FORMAT	02150
983	622A	06545	982	315A	04762	110	335A	05042
120	346A	05070	125	350A	05107	130	365A	05326
270	605A	06450	150	383A	05370	160	FORMAT	02164
210	428A	05600	220	445A	05633	230	448A	05635
240	461A	05674	235	459A	05664	245	464A	05676
250	475A	05755	255	482A	05766	260	493A	06030
310	522A	06157	300	519A	06147	340	530A	06212
320	532A	06173	360	543A	06230	350	539A	06220
370	FORMAT	02210	430	581A	06407	410	574A	06364
420	578A	06376	450	600A	06441	440	596A	06436
460	603A	06445	984	FORMAT	02263	985	FORMAT	02275
1390	761A	10415	1330	708A	10115	1190	677A	07536
1170	673A	07526	1220	684A	07555	1290	696A	07635
1250	688A	07566	1280	694A	07623	1340	715A	10145
1335	FORMAT	02304	1343	725A	10212	1360	740A	10264
1370	742A	10320	1380	744A	10354	1345	729A	10214
1350	735A	10230	1355	FORMAT	02322	1385	755A	10377
1505	FORMAT	02334	1550	782A	11037	1595	FORMAT	02344
1620	811A	11156	1650	822A	11204	1740	850A	11444
1910	889A	12363	1915	899A	12404	1930	FORMAT	02355
1940	928A	12507	1970	FORMAT	02364			

THE FIRST LOCATION NOT USED BY THIS PROGRAM IS 12600.

SUBROUTINE STRIP

COMMON VARIABLES

COMMON BLOCK ZZTZ ORIGIN 00001 LENGTH 00052

SYMBOL	LOCATION	TYPE	SYMBOL	LOCATION	TYPE	SYMBOL	LOCATION	TYPE
CC	00000	R	CE	00024	R	CT	00045	R
C11	00000	R	C13	00001	R	C14	00002	R
C15	00003	R	C33	00004	R	C34	00005	R
C35	00006	R	C36	00007	R	C44	00010	R
C45	00011	R	C46	00012	R	C55	00013	R
C56	00014	R	C66	00015	R	C16	00016	R
E11	00024	R	E13	00025	R	E14	00026	R
E15	00027	R	E16	00030	R	E31	00031	R
E33	00032	R	E34	00033	R	E35	00034	R
E36	00035	R	T11	00045	R	T13	00046	R
T33	00047	R						

COMMON BLOCK FLAG ORIGIN 00053 LENGTH 00001

ONCE	00000	L

DIMENSIONED PROGRAM VARIABLES

SYMBOL	LOCATION	TYPE	SYMBOL	LOCATION	TYPE	SYMBOL	LOCATION	TYPE
ONES	00054	R	CA	00061	R	CB	00101	R
CD	00121	R						

UNDIMENSIONED PROGRAM VARIABLES

SYMBOL	LOCATION	TYPE	SYMBOL	LOCATION	TYPE	SYMBOL	LOCATION	TYPE
ZERO	00141	C	ONE	00143	C	JIMAG	00145	C
P	00147	I	RGAM	00150	R	J	00151	I
K	00152	I	L	00153	I	M	00154	I
T1	00155	R	T2	00156	R	T3	00157	R
ZH	00160	R	ZI	00161	R	ZJ	00162	R
ZK	00163	R	ZL	00164	R	ZM	00165	R
ZN	00166	R	ZS	00167	R	ZU	00170	R
ZV	00171	R	ANORM	00172	R	TPI	00173	R

ENTRY POINTS

STRIP	SECTION	4

SUBROUTINES CALLED

.CFMP.	SECTION	5	.FWRD.	SECTION	6	CABS	SECTION	7
.CFCP.	SECTION	8	.UN06.	SECTION	9	.FFIL.	SECTION	10
.FCNV.	SECTION	11	E.1	SECTION	12	E.2	SECTION	13
E.3	SECTION	14	E.4	SECTION	15	SYSLOC	SECTION	16

EFN IFN CORRESPONDENCE

EFN	IFN	LOCATION	EFN	IFN	LOCATION	EFN	IFN	LOCATION
670	5A	0C376	680	9A	00400	1030	88A	01245
1020	86A	01243	101C	84A	01240	1035	94A	01251
1050	FORMAT	0C216	1155	111A	01321	1157	126A	01371

THE FIRST LOCATION NOT USED BY THIS PROGRAM IS 01526.

SUBROUTINE CROCT

COMMON VARIABLES

COMMON BLOCK ORDER ORIGIN 00001 LENGTH 00024

SYMBOL	LOCATION	TYPE	SYMBOL	LOCATION	TYPE	SYMBOL	LOCATION	TYPE
C	00000	C	K	00022	I	M	00023	I

UNDIMENSIONED PROGRAM VARIABLES

SYMBOL	LOCATION	TYPE	SYMBOL	LOCATION	TYPE	SYMBOL	LOCATION	TYPE
X1	00025	C	CXC	00027	C	JUNK	00031	I
N	00032	I						

ENTRY POINTS

CROCT	SECTION	3

SUBROUTINES CALLED

RCUND	SECTION	4	POL	SECTION	5	CABS	SECTION	6
PULLER	SECTION	7	.CFMP.	SECTION	8	.CFDP.	SECTION	9
E.1	SECTION	10	E.2	SECTION	11	E.3	SECTION	12
E.4	SECTION	13	SYSLOC	SECTION	14			

EFN IFN CORRESPONDENCE

EFN	IFN	LOCATION	EFN	IFN	LOCATION	EFN	IFN	LOCATION
100	6A	00063	110	11A	00070	130	30A	00132
200	49A	00337	120	24A	00124	240	52A	00252
250	67A	00314	290	73A	00341			

THE FIRST LOCATION NOT USED BY THIS PROGRAM IS 00422.

STORAGE MAP

SUBROUTINE MULLER

UNDIMENSIONED PROGRAM VARIABLES

SYMBOL	LOCATION	TYPE	SYMBOL	LOCATION	TYPE	SYMBOL	LOCATION	TYPE
X1	00001	C	X2	00003	C	X3	00005	C
H2	00007	C	L2	00011	C	D2	00013	C
G	00015	C	FX	00017	C	FX1	00021	C
FX2	00023	C	D	00025	C	TWO	00027	C
ONE	00031	C	GPD	00033	C	GMD	00035	C
L3	00037	C	FX3	00041	C	H1	00043	C
K	00045	I	CGPD	00046	R	CGMD	00047	R

ENTRY POINTS

MULLER	SECTION	2

SUBROUTINES CALLED

CABS	SECTION	3	.CFMP.	SECTION	4	CVERCK	SECTION	5
CSQRT	SECTION	6	.CFDP.	SECTION	7	E.1	SECTION	8
E.2	SECTION	9	E.3	SECTION	10	E.4	SECTION	11
SYSLOC	SECTION	12						

EFN IFN CORRESPONDENCE

EFN	IFN	LOCATION	EFN	IFN	LOCATION	EFN	IFN	LOCATION
190	11A	00173	220	14A	00210	540	52A	01001
360	31A	00572	580	57A	01023	370	34A	00634
420	47A	00730	450	51A	00740	390	45A	00725
570	56A	01022						

THE FIRST LOCATION NOT USED BY THIS PROGRAM IS 01076.

STORAGE MAP

FUNCTION POL TYPE C

COMMON VARIABLES

COMMON BLOCK . ORDER ORIGIN 00001 LENGTH 00024

SYMBOL	LOCATION	TYPE	SYMBOL	LOCATION	TYPE	SYMBOL	LOCATION	TYPE
C	00000	C	K	00022	I	M	00023	I

UNDIMENSIONED PROGRAM VARIABLES

SYMBOL	LOCATION	TYPE	SYMBOL	LOCATION	TYPE	SYMBOL	LOCATION	TYPE
F.0000	00025	C	T	00027	C	J	00031	I

ENTRY POINTS

PCL	SECTION	3

SUBROUTINES CALLED

.CFMP.	SECTION	4	OVERCK	SECTION	5	E.1	SECTION	6
E.2	SECTION	7	E.3	SECTION	8	E.4	SECTION	9
SYSLCC	SECTION	10						

EFN IFN CORRESPONDENCE

EFN	IFN	LOCATION	EFN	IFN	LOCATION	EFN	IFN	LOCATION
100	9A	00124						

THE FIRST LOCATION NOT USED BY THIS PROGRAM IS 00150.

```
                LINB03   CONWAY      PHASE            N4                          12/31/69    000109      PAGE  69
        TFUN..                                   STORAGE  MAP

                                        FUNCTION    TFUN        TYPE     C

                                             COMMON   VARIABLES

                 COMMON BLOCK      LINK              ORIGIN       00001          LENGTH       00532

SYMBOL      LOCATION      TYPE            SYMBOL      LOCATION      TYPE          SYMBOL      LOCATION      TYPE
JUNK1        0000C         I              ALFAB        00364         C             JUNK2        00374         I
BETAB        00440         C              JUNK3        00500         I             VS           00510         R
JUNK4        00511         I

                 COMMON BLOCK      CIA               ORIGIN       00533          LENGTH       00004
IA           00000         I

                                          UNDIMENSIONED PROGRAM VARIABLES

SYMBOL      LOCATION      TYPE            SYMBOL      LOCATION      TYPE          SYMBOL      LOCATION      TYPE
F.000C       00537         C              I            00541         I

                                                  ENTRY POINTS

      TFUN        SECTION     4

                                                  SUBROUTINES CALLED

      CEXP        SECTION     5              .CFMP.      SECTION     6              .CFDP.      SECTION     7
      E.1         SECTION     8              E.2         SECTION     9              E.3         SECTION     10
      E.4         SECTION     11             SYSLOC      SECTION     12

                                             EFN    IFN    CORRESPONDENCE

EFN         IFN         LOCATION        EFN         IFN         LOCATION        EFN         IFN         LOCATION
80          7A          0C[illegible]
 THE FIRST LOCATION NOT USED BY THIS PROGRAM IS 01232.
```

```
          LINBO3   CONWAY      PHASE          N4                                12/31/69    000109      PAGE  73
     P1FUN.                                  STORAGE  MAP

                                  FUNCTION    P1FUN       TYPE     C

                                       COMMON   VARIABLES

                 COMMON BLOCK      LINK              ORIGIN       00001          LENGTH       00532

SYMBOL      LOCATION      TYPE            SYMBOL      LOCATION      TYPE          SYMBOL      LOCATION      TYPE
JUNK1        00000         I              ALFAB        00364         C             JUNK2        00374         I
BETAB        00440         C              JUNK3        00500         I

                 COMMON BLOCK      BETAN             ORIGIN       00533          LENGTH       00001
NBETA        00000         I

                 COMMON BLOCK      CIA               ORIGIN       00534          LENGTH       00004
IA           00000         I

                                       UNDIMENSIONED PROGRAM VARIABLES

SYMBOL      LOCATION      TYPE            SYMBOL      LOCATION      TYPE          SYMBOL      LOCATION      TYPE
F.0000       00540         C              J            00542         C             NK4          00544         I
I            00545         I              L            00546         I             M            00547         I

                                                ENTRY POINTS

     P1FUN       SECTION     5

                                                SUBROUTINES CALLED

     .CFMP.      SECTION     6              .CFDP.      SECTION     7              E.1         SECTION     8
     E.2         SECTION     9              E.3         SECTION     10             E.4         SECTION     11
     SYSLOC      SECTION     12

                                       EFN    IFN    CORRESPONDENCE

EFN         IFN         LOCATION        EFN         IFN         LOCATION        EFN         IFN         LOCATION
230         33A         02102
 THE FIRST LOCATION NOT USED BY THIS PROGRAM IS 02233.
```

```
CDET..   LINB03   CONWAY   PHASE   N4                                12/31/65   000109   PAGE  71
                                   STORAGE  MAP
```

SUBROUTINE CDET

DIMENSIONED PROGRAM VARIABLES

SYMBOL	LOCATION	TYPE	SYMBOL	LOCATION	TYPE	SYMBOL	LOCATION	TYPE
S	00001	R						

UNDIMENSIONED PROGRAM VARIABLES

SYMBOL	LOCATION	TYPE	SYMBOL	LOCATION	TYPE	SYMBOL	LOCATION	TYPE
B	00001	C	PHI	00001	R	SUM	00002	R
SGN	000C3	R	I	00004	I	II	00005	I
J	00006	I	JJ	00007	I	PI	00010	R

ENTRY POINTS

CDET	SECTION	2

SUBROUTINES CALLED

ALOG	SECTION	3	CABS	SECTION	4	.CFDP.	SECTION	5
.CFMP.	SECTION	6	ATAN2	SECTION	7	CCS	SECTION	8
SIN	SECTION	9	.XP3.	SECTION	10	E.1	SECTION	11
E.2	SECTION	12	E.3	SECTION	13	E.4	SECTION	14
CC.1	SECTION	15	CC.2	SECTION	16	CC.3	SECTION	17
CC.4	SECTION	18	SYSLOC	SECTION	19			

EFN IFN CORRESPONDENCE

EFN	IFN	LOCATION	EFN	IFN	LOCATION	EFN	IFN	LOCATION
6	6A	00073	15	49A	00335	8	13A	00150
9	18A	00163	11	24A	00212	10	38A	00253
12	30A	00231	14	44A	00302	16	53A	00343
20	64A	00410	18	84A	00563	100	78A	00530
200	81A	00547						

THE FIRST LOCATION NOT USED BY THIS PROGRAM IS 00703.

STORAGE MAP

SUBROUTINE CMATS

UNDIMENSIONED PROGRAM VARIABLES

SYMBOL	LOCATION	TYPE	SYMBOL	LOCATION	TYPE	SYMBOL	LOCATION	TYPE
R	00001	C	M	00003	I	N	00004	I
NM1	00005	I	MM	00006	I	II	00007	I
I	00010	I	J	00011	I	JJ	00012	I
KK	00013	I						

ENTRY POINTS

CMATS	SECTION	2

SUBROUTINES CALLED

CABS	SECTION	3	.CFDP.	SECTION	4	.CFMP.	SECTION	5
E.1	SECTION	6	E.2	SECTION	7	E.3	SECTION	8
E.4	SECTION	9	SYSLOC	SECTION	10			

EFN IFN CORRESPONDENCE

EFN	IFN	LOCATION	EFN	IFN	LOCATION	EFN	IFN	LOCATION
199	98A	0C610	5	5A	00050	160	58A	00327
6	8A	0CC56	155	54A	00323	15	52A	00317
11	26A	0C174	10	40A	00233	12	32A	00213
14	46A	00266	166	63A	00336	28	95A	00604
287	78A	0C443	289	90A	00527	25	86A	00502

THE FIRST LOCATION NOT USED BY THIS PROGRAM IS CC733.

```
          LINB03   CONWAY      PHASE            N4                          12/31/65    000109      PAGE  73
     OVRDK                                   STORAGE  MAP

                                  SUBROUTINE  OVERCK

                                       COMMON   VARIABLES

              COMMON BLOCK      OVR              ORIGIN       00001          LENGTH       00002

SYMBOL      LOCATION      TYPE          SYMBOL      LOCATION      TYPE          SYMBOL      LOCATION      TYPE
KO           00000         I             NI           00001         I

              COMMON BLOCK      //               ORIGIN       00003          LENGTH       00001
KCUNT        00000         I

                                     UNDIMENSIONED PROGRAM VARIABLES

SYMBOL      LOCATION      TYPE          SYMBOL      LOCATION      TYPE          SYMBOL      LOCATION      TYPE
IAND         00004         I             XAND         00004         R            MASK         00005         I
KNTFPT       00006         I             KNTSAV       00007         I            KNT1         00010         I
KNT2         00011         I

                                                ENTRY POINTS

     OVERCK      SECTION     4

                                                SUBROUTINES CALLED

     SYSLOC      SECTION     5

                                          EFN   IFN   CORRESPONDENCE

EFN         IFN         LOCATION        EFN         IFN         LOCATION        EFN         IFN         LOCATION

 THE FIRST LOCATION NOT USED BY THIS PROGRAM IS 00103.
                                          COMPILATION       LINB03          DIAGNOSTIC   MESSAGES

1     SOURCE ERROR   13   LEVEL 1 - WARNING ONLY
THIS STATEMENT CANNOT BE REACHED.

2     SOURCE ERROR   20   LEVEL 1 - WARNING ONLY
THE PROGRAM SHOULD END WITH A TRANSFER. A RETURN HAS BEEN GENERATED.
                                          COMPILATION       ROOT..          DIAGNOSTIC   MESSAGES

1     SOURCE ERROR   13   LEVEL 1 - WARNING ONLY
THIS STATEMENT CANNOT BE REACHED.

                                  PHASE B DIAGNOSTIC MESSAGES
```

```
2     SOURCE ERROR   290  LEVEL 1 - WARNING ONLY
      DATA STATEMENT    5     GROUP 1
      VARIABLE NAME -   TEN10  APPEARS ONLY IN DATA STATEMENT.
                                          COMPILATION      STRIP.          DIAGNOSTIC   MESSAGES

                                     PHASE 8 DIAGNOSTIC MESSAGES

1     SOURCE ERROR   290  LEVEL 1 - WARNING ONLY
      DATA STATEMENT    1     GROUP 1
      VARIABLE NAME -   TPI    APPEARS ONLY IN DATA STATEMENT.
```

```
                    * MEMORY MAP *

SYSTEM                                  00000 THRU  02717
FILE BLCCK ORIGIN                       02720
FILES        1.     UNIT06              (NO BUFF POOL ATTACHED)
             2.     UNIT01              (NO BUFF POOL ATTACHED)
             3.     UNIT02              (NO BUFF POOL ATTACHED)
             4.     UNIT03              (NO BUFF POOL ATTACHED)
             5.     UNIT04              (NO BUFF POOL ATTACHED)
             6.     UNIT05              (NO BUFF POOL ATTACHED)
             7.     UNIT07              (NO BUFF POOL ATTACHED)
             8.     UNIT08              (NO BUFF POOL ATTACHED)
             9.     UNIT09              (NO BUFF POOL ATTACHED)
            10.     UNIT10              (NO BUFF POOL ATTACHED)
            11.     UNIT39              (NO BUFF POOL ATTACHED)
PRE-EXECUTION INITIALIZATION            03124
CALL CR CBJECT PRCGRAM                  03133
ORJECT PRCGRAM                          03140 THRU  73565

      CECK  ORIGIN      CONTROL SECTIONS  (/NAME/=NCN O LENGTH, (LOC)=DELETED, *=NOT REFERENCED)

 1. LINBO3  03140       /ROTAT / 03141    /GET   / 03142    /PLOTS / 03143    /OVR   / C3144    /ZZTZ  / 03146
                        /LINK  / 03220    /GPEPS / 03752    /FLAG  / 04032    /BETAN / 04033    /CSET  / 04034
                        /FROOT / 04037    /COM   / 04042    /CIA   / 04044    /ALESS / C4050    /CIFL  / 04051
                         ......  21334 *
 2. ROOT..  21356       /GET   /(03142)   /PLOTS /(03143)   /FROOT /(04037)   /ALESS /(04050)    ROOT    22444
 3. SETCT.  22537       /RCTAT /(03141)   /ZZTZ  /(03146)   /FRT   / 22540    /GPEPS /(03752)   /CSET  /(04034)
                        /CSET1 / 23112    /BETAN /(04033)    SETCTE  26033
 4. RCUNC.  26064        RCUKD   26145
 5. CSFUN.  26163        CSFUN   26274
 6. FF....  26322       /FRT   /(22540)    FF      26462
 7. R.      26516       /FRT   /(22540)    R       26631
 8. TIJ.    26661       /FRT   /(22540)   /GPEPS /(03752)    TIJ     26750
 9. F.....  26774       /ZZTZ  /(03146)   /FRCOT /(04037)   /BETAN /(04033)   /CSET1 /(23112)   /LINK  /(03220)
                        /CIA   /(04044)   /COM   /(04042)   /GPEPS /(03752)   /ALESS /(C4050)   /CIFL  /(04051)
                         F       40631
10. STRIP. 40667        /ZZTZ  /(03146)   /FLAG  /(04032)    STRIP   42237
11. CROOT. 42342        /ORDER / 42343     CROOT   42715
12. MULER. 42764         MULLER  44014
13. PCL... 44062        /ORDER /(42343)    POL     44173
14. TFUN.. 44206        /LINK  /(03220)   /CIA   /(04044)    TFUN    44636
15. P1FUN. 44702        /LINK  /(03220)   /BETAN /(04033)   /CIA   /(04044)    P1FUN   46271
16. CDET.. 46376         CDET    47246
17. CPATS. 47301         CPATS   50215
18. CVRDK  50234        /OVR   /(03144)   ///    /(77776)    OVERCK  50323
19. .LXCCN 50334         .LXSTR  50334     .LXSIP  50337     .LXOUT  50361 *   .LXERR  50370     .LXCAL  50373
                         .LXRTN  50373 *   I&EXIT  50373     .DBCLS  50553 *   ..PLOL  50557 *   .LXARG  50643 *
                         .LO     50652 *   .CLSE   50660 *   .LFBL   50661 *   .LUNB   50662 *   .DFOUT  50663
20. .LXSL  50667         .LXSEL  50667     .LXSL1  5C670     .LXTST  50673     .LXOVL  50733     .LXMOD  50775
                         .LXIND  51021     .LXDIS  51024 *   .LXFLG  51025 *   .LTCH   51026
21. .FPTRP 51034         .FFPT.  51034 *   .FXEM.  51C36     .FXEM   51036 *   .ETAG   51265 *   .FMCRT  51401 *
                         .CGOTO  51414 *   .FXOUT  51420 *   .FXARG  51432 *   .EXIT.  51434 *   EXIT    51434
                         .CVCHK  51441 *   OVFLOW  51442 *   SYSCNE  51467     .NOP    51470     .BLANK  51503
22. .CRAS. 51520         E.1     51520     E.2     51521     E.3     51522     E.4     51523
23. .XCC.  51524         CC.1    51524     CC.2    51525     CC.3    51526     CC.4    51527
24. FCNV   51530         .FCON.  51530     .DCPRE  51540 *   .FCNV.  51546     .ENDFS  51557     .CNVSW  51561
```

```
                IBLDR   CONWAY      PHASE            N4                          12/31/69    000109      PAGE  76

                        .FDX1   51565     .FDX2   51566     .DBC    51570     .DBC14  51633 *   .STOP4  51636 *
                        .DBC20  51652     .DBC10  51666     .DBC99  51701 *   .DDSW   51724 *   .FIXSW  51733
                        .DXPSE  51747 *   .DDZET  52054 *   .IC10   52115 *   .STOPJ  52132     .FCOUT  52146 *
                        .FCARG  52154 *   .ALCOD  52156     .ANPT   52167     .ONPT   52204     .LNTP   52260
                        .AOUT   52317     .OCUT   52331     .LOUT   52360     .GOUT   52370     .TGOUT  52377 *
                        .FLT    52477     .FXFL1  52634     .FXD    52640     .FXFL2  52644     .FXFL3  52650
                        .INTG   52654     .TCPAC  52672     .WIDTH  52676     .FPACK  52703     .TEST   52704
                        .DDSF   52735 *   .KCUN   52736     .LIST   52741     .DCNE   52750     .CHAR   53310
                        .DEXP   53317     .TEN    53323 *   .FBDBF  53325     .DATUM  53333 *   .WORD   53346
                        .MQD    53347     .PEX    53350     .FEXP   53351     .DIG    53352    /DDDDDD/ 53365
25. FICB    53442       .FIOB.  53442     .FCNT   53545 *   .FBLT.  53641     .FBDT.  53661 *   .FRLR.  53705 *
                        .FWLR.  53746     .FRITE  54027    /EEEEEE/ 54035
26. FIOH    54036       .FIOH.  54036     .DCIO   54063 *   .DDLET  54221 *   .DCPT1  54424 *   .FXPT   54522 *
                        .FFIL.  54653     .DDFIN  54671 *   .FRTN.  54700     .DDRTN  54704 *   .FILL2  54740
                        .FILT   54746     .FILDD  54772    /DDDDDD/(53365)
27. FIOS.   55006       ..FIOS  55006     .FCLS   55030     ..FIOC  55065     ..FSEL  55106     ..FBCK  55125
                        ..FTCK  55127     .ICEF   55217 *   ..XEM   55225 *   SETECF  55242 *   ..BBUF  55270
                        .FB18F  55271     .OUTBF  55272     ..FCHK  55273    /EEEEEE/(54035)   /DDDDDD/(53365)
28. FBCD.   55376       ..FBCD  55376     ..FBCW  55400     .UN99.  55411     ..RERD  55412     .RRDBF  55413
                        SETDBF  55414 *  /DDDDDD/(53365)   /RRRRRR/ 55443
29. FRDD.   55471       ..FRDD  55471     REREAD  55550 *  /RRRRRR/(55443)   /DDDDDD/(53365)   /EEEEEE/(54035)
30. FWRD.   55564       ..FWRD  55564    /RRRRRR/(55443)   /DDDDDD/(53365)
31. FBIN.   55634       ..FBID  55634 *   ..FBIW  55636     ..FWPR  55651     ..FWSC  55652     SETBBF  55653
                       /BBBBBB/ 55670     ..FB1B  55671 *
32. FWRB.   56671       ..FWRB  56671    /BBBBBB/(55670)
33. FEFT.   56737       ..FEFT  56737
34. FVIO.   56760       ..FVIO  56760
35. UNITC6  57024       ..UN06  57024
36. FRDU.   57025       ..FRDU  57025    /DDDDDD/(53365)
37. .CUMCB  57072       .VD     57072     .WRODB  57074 *   .WRODR  57076 *
38. UN01    57100       .UN01.  57100
39. UN02    57101       .UN02.  57101
40. UN03    57102       .UN03.  57102
41. UN04    57103       .UN04.  57103
42. UN05    57104       .UN05.  57104
43. UN06    57105       .UN06.  57105
44. UN07    57106       .UN07.  57106
45. UN08    57107       .UN08.  57107
46. UN09    57110       .UN09.  57110
47. UN10    57111       .UN10.  57111
48. FICU    57112       .FIOU.  57112     .CTUIC  57551     .NMLST  57574     .NAME.  60615     .INTAP  60616
49. FPUN    60737       .FPUN.  60737    /DDDDDD/(53365)
50. FLCG    60774       ALOG10  60774     ALOG    60775
51. FXPF    61151       EXP     61151
52. FSCN    61254       COS     61254     SIN     61255
53. FSQR    61430       ASQRT   61430 *   SQRT    61433
54. FTNH    61474       TANH    61474
55. FATN    61566       ATAN2   61566     ATAN    61567
56. FXP1    62006       .XP1.   62006
57. .ICE.   62112
58. .ICE56  62124
59. .RWBOE  62132
60. .RWCCE  62153
61. FSLOC   62173       .FSLO.  62211     .FSDO.  62217 *
62. FSLC    62230       .SLO.   62230     .SLO2.  62236     .SDO.   62243     .SDO2.  62252
63. PPI.    62264       PLTID.  62264     AGAIN   62345    /XCPIDX/ 62357 *   DOT.    62372     NAME.   62425
```

```
                IBLDR   CONWAY      PHASE            N4                          12/31/69    000109      PAGE  77

 64. PM2.     62460       QD.      62460     PIDOK.  62462     PINOK.  62466 *   DRMPLT  62502 *   LINE     62510
                          NUMBER   62512     SCALE   62514     AXIS    62516     SYMBOL  62520     PLOT     62522
                          WHERE    62524     LNE222  62575     LNE222 (62575)
 65. PM3.     62733       PLT1.    62733     GETMX.  63072     GETMY.  63074     NOR.    63076     ALLOW.   63104
                          FCT1.    63112     YORG    63126     PL3.    63137     FCT2.   63166
 66. WRTEEE   63205
 67. PM4.     63361       SYMBL.   63361
 68. PM5.     64203       WTE.     64203
 69. PM7.     64333       ENDPLT   64333
 70. PM8.     64455       CPLOT.   64455
 71. FUDGE    64641       FRAME    64641 *   CHEAT   64650 *   SCALXY  64656 *   PLOTS.  64661     PLT2.    64676
                          BEAMST   64763     WHR.    65030     FCTR.   65052     ENTER   65070     NEWFRM   65071
                          FRMCNT   65076
 72. PM2.1    65121       GTBEAM   65121 *   STBEAM  65124 *   QPLOT   65144 *   CRTPLT  65154     PLOTID   65173
 73. CALCOP   65246       .UN39.   65246 *   CALCMP  65247    /EEEEEE/(54035)   /BBBBBB/(55670)
 74. PF1.     67426       NBER     67750
 75. PF2.     70014       AXS      71072
 76. PF3.     71153       LNE      71517
 77. PF4.     71605       SCLE     72133
 78. FCAB     72212       CABS     72213
 79. FCXP     72253       CEXP     72254
 80. FCAS     72342       .CFMP.   72343     .CFDP.  72344
 81. FCSQ     72455       CSQRT    72456
 82. FCSC     72532       DCOS     72533     DSIN    72540
 83. FCX1     72724       .CXP1.   72724     .DXP1.  72726 *   DEXP2   72727 *
 84. .BSF.    73112       .BSF.   (73112)
 85. SKFILE   73130       SKFILE  (73130)
 86. FXP2     73213       .XP2.    73213
 87. FXP3     73306       .XP3.    73306
 88. CCSH     73375       CCSH    (73375)
 89. SINH     73443       SINH    (73443)
 90. .CZDIV   73512      /ACZDIV/ 73512 *
 91. .CSNT.   73514       .CSNTL   73514
 92. .XPER.   73520       .EXITL   73520     .EXPTL  73524
 93. .LOGE.   73530       .LOGER   73530
 94. .SNTL.   73536       .SNTL    73536
 95. .SCRTN   73542       .SQRTN  (73542)
 96. .TAZ     73545       .TAZ    (73545)
 97. .TLEX.   73550       .TLEXP   73550
 98. .XEXP.   73554       .NGDEF   73554     .XEXP   73560     .ZUDEF  73563
 99. //       77776

UNUSED CORE                          73566 THRU  77775

  BEGIN EXECUTION.

    TRANSFORMED ELASTIC CONSTANTS   ( C(I), I=1,20 )

     2.45C0000E 11
     7.5CC0000E 1C
     0.
     C.
     2.03C0000E 11
     0.
     9.CC00000E C9
     0.
     7.5CCC000E 10
     0.
    -9.C0C0000E C9
     6.CCC0000E 1C
```

```
 0.
 6.C0C0000E 10
 0.
 7.5CC0000E 10
-9.CGCCC000E C9
 0.
 C.
 5.30CC000E 10

TRANSFCRMED PIEZOELECTRIC CONSTANTS   ( E(I:, I=1,17 )
 1.3CC00C0E C0
 2.C0C0000E-C1
 0.
 C.
 0.
 C.
-2.5CCC000E C0
 0.
 3.70CC000E CC
 0.
 2.00C0000E-01
 2.50C00C0E 00
 0.
 0.
 2.5000009E CC
 C.
 3.7000000E 00

TRANSFCRMED DIELECTRIC CONSTANTS      ( T(I), I=1,5 )
 2.570C000E-10
 0.
 3.90C0000E-1C
 C.
 0.

COEFFICIENTS OF FOLYNOMIAL
-0.6029385E 24      0.
 0.                 0.8562924E 23
 C.8513205E 24      0.
-C.                -0.3294582E 24
```

```
-C.61C7596E 24      0.
 0.                 0.6E60760E 23
 C.1774096E 23      0.
 0.                 0.7146826E 12
-C.4749200E 21      0.

COEFFICIENTS OF POLYNOMIAL
-C.7C82391E 0C      0.
 0.                 0.1005840E 00
 C.10C0000E 01     -0.
-0.                -0.3869567E 00
-0.7174261E 00      0.
 0.                 0.8C58563E-01
 0.2083934E-C1     -0.
 0.                 0.
-0.5578627E-C3      0.

INTERMECIATE ROOTS OF POLYNOMIAL

-1.63345E-01  1.20000E-01  1.63345E-C1  1.20000E-01  7.74633E-01  3.96277E-01  1.28413E-01 -6.48500E-02
-7.74633E-01  3.96277E-01 -1.28413E-01 -6.48500E-02  1.03875E 00 -3.80417E-01 -1.03875E 00 -3.80417E-01

INTERMECIATE POSITIVE ROOTS

 1.63345E-01  1.20000E-01  7.74633E-01  3.96277E-01  1.28413E-01 -6.48500E-02  1.03875E 0C -3.80417E-01

RE-ORDEREC ALPHAS ( 1 ROW, 3 ZERO CASE )

 1.63345E-01  1.20000E-01  7.74633E-01  3.96277E-01  1.28413E-01 -6.48500E-02  1.03875E 0C -3.80417E-01

INTERMECIATE BETA B

 0.           0.           2.07710E-11  5.01161E-11 -6.54416E-11  4.25594E-12  2.27313E-11 -6.97380E-11
 1.00000E-10  0.           0.           0.           0.           0.           0.           0.
 0.           0.           2.16897E-11 -5.39077E-11 -2.24545E-10  5.24802E-10 -2.08899E-11 -4.05626E-11
 0.           0.           1.00000E 00  0.           1.000C0E 00  0.           1.00000E 0C  0.

INTERMECIATE L MATRIX BY CCLUMNS

 0.           0.           1.22509E 00 -2.56G00E-C8  0.           0.           0.           0.
 6.21789E 00  5.29229E 00  0.           0.           2.50323E 00 -5.34639E 00 -2.20857E 00  1.82708E 00
-3.14539E 01 -1.26876E 01 -0.          -0.          -4.38118E 00  1.01127E 01 -2.04377E 01 -9.92681E 00
 5.76791E 00 -7.83388E 00  0.           0.          -4.56512E 00 -5.00197E 00 -1.81849E 00 -1.43485E 00

VS =  0.3480000E 04     F(VS) = -0.3593011E 02 -0.166C051E 02     MAG =  0.3957967E 02

COEFFICIENTS OF PCLYNOMIAL
-0.6025385E 24      0.
 0.                 0.8562924E 23
 0.87C8338E 24      0.
-0.                -0.3321240E 24
-0.63E5181E 24      0.
 0.                 0.7365250E 23
 0.3101833E 23      0.
 0.                 0.4026611E 14
-0.8934538E 21      0.

COEFFICIENTS OF FCLYNOMIAL
-0.6923692E 00      0.
 0.                 0.5833018E-01
```

```
 0.1000000E 01    -0.
-0.               -0.3613862E 00
-0.7332261E 00     0.
 0.                0.8457700E-01
 0.3561912E-01    -0.
 0.                0.
-0.1025975E-02     0.

INTERMEDIATE ROOTS OF POLYNOMIAL

-2.04412E-01  1.20000E-01  2.04412E-01  1.20000E-01  7.77745E-01  3.98383E-01  1.53931E-01 -6.58000E-02
-7.77745E-01  3.98383E-01 -1.53931E-01 -6.58002E-02  1.04255E 00 -3.81573E-01 -1.04255E 00 -3.81573E-01

INTERMEDIATE POSITIVE ROOTS

 2.04412E-01  1.20000E-01  7.77745E-01  3.98383E-01  1.53931E-01 -6.58000E-02  1.04255E 00 -3.81573E-01

RE-ORDERED ALPHAS ( 1 ROW, 3 ZERO CASE )

 2.04412E-01  1.20000E-01  7.77745E-01  3.98383E-01  1.53931E-01 -6.58000E-02  1.04255E 00 -3.81573E-01

INTERMEDIATE BETA B

 0.           0.           2.11136E-11  4.98697E-11 -6.37559E-11  4.84614E-12  2.30816E-11 -6.97654E-11
 1.00000E-10  0.           0.           0.           0.           0.           0.           0.
 0.           0.           2.11008E-11 -5.41177E-11 -1.55631E-10  4.54277E-10 -2.07061E-11 -4.08236E-11
 0.           0.           1.00000E 00  0.           1.00000E 00  0.           1.00000E 00  0.

INTERMEDIATE L MATRIX BY COLUMNS

 0.           0.           1.53309E 00 -2.56000E-08  0.           0.           0.           0.
 6.25920E 00  5.26568E 00  0.           0.           2.47791E 00 -5.43538E 00 -2.19642E 00  1.81600E 00
-2.72034E 01 -8.56332E 00 -0.          -0.          -3.71741E 00  1.05007E 01 -1.79968E 01 -7.32309E 00
 5.81854E 00 -7.85857E 00  0.           0.          -4.57388E 00 -5.07106E 00 -1.80946E 00 -1.42852E 00

VS =  0.3445200E 04     F(VS) = -0.1975967E 03 -0.7503187E 02     MAG =  0.2113628E 03

COEFFICIENTS OF POLYNOMIAL
-0.6025385E 24     0.
 0.                0.8562924E 23
 0.8611016E 24     0.
-0.                -0.3207544E 24
-0.6246250E 24     0.
 0.                0.7113014E 23
 0.2433559E 23     0.
-0.                0.
-0.6680190E 21     0.

COEFFICIENTS OF POLYNOMIAL
-0.7001943E 00     0.
 0.                0.9544150E-01
 0.1000000E 01    -0.
-0.                -0.3641526E 00
-0.7253790E 00     0.
 0.                0.8260365E-01
 0.2926146E-01    -0.
 0.                0.
-0.7757725E-03     0.

INTERMEDIATE ROOTS OF POLYNOMIAL
```

```
 -1.85072E-01  1.20000E-01  1.85072E-01  1.20000E-01  7.76190E-01  3.97339E-01  1.41843E-01 -6.53300E-02
 -7.76190E-01  3.97339E-01 -1.41843E-01 -6.53301E-02  1.04065E 00 -3.80999E-01 -1.04065E 00 -3.80999E-01

INTERMEDIATE POSITIVE ROOTS

  1.85072E-01  1.20000E-01  7.76190E-01  3.97339E-01  1.41843E-01 -6.53300E-02  1.04065E 00 -3.80999E-01

RE-ORDERED ALPHAS ( 1 ROW. 3 ZERO CASE )

  1.85072E-01  1.20000E-01  7.76190E-01  3.97339E-01  1.41843E-01 -6.53300E-02  1.04065E 00 -3.80999E-01

INTERMEDIATE BETA B

  0.           0.           2.09434E-11  5.00031E-11 -6.45868E-11  4.58129E-12  2.29070E-11 -6.97519E-11
  1.00000E-10  0.           0.           0.           0.           0.           0.           0.
  0.           0.           2.13941E-11 -5.40149E-11 -1.84521E-10  4.86400E-10 -2.07979E-11 -4.06939E-11
  0.           0.           1.00000E 00  0.           1.00000E 00  0.           1.00000E 00  0.

INTERMEDIATE L MATRIX BY COLUMNS

  0.           0.           1.38804E 00  3.84000E-08  0.           0.           0.           0.
  6.23869E 00  5.28099E 00  0.           0.           2.49075E 00 -5.39115E 00 -2.20244E 00  1.82153E 00
 -2.91404E 01 -1.02914E 01 -0.          -0.          -4.01803E 00  1.03550E 01 -1.91064E 01 -8.41849E 00
  5.79348E 00 -7.84628E 00  0.           0.          -4.56960E 00 -5.03660E 00 -1.81395E 00 -1.43168E 00

VS =  0.3462600E 04     F(VS) = -0.1176182E 03 -0.4881579E 02     MAG =  0.1273461E 03

COEFFICIENTS OF POLYNOMIAL
    -0.6029385E 24     0.
     0.                0.8562924E 23
     0.8470322E 24     0.
    -0.                -0.3288724E 24
    -0.6047114E 24     0.
     0.                0.6750561E 23
     0.1468763E 23     0.
     0.                0.7146826E 12
    -0.4007685E 21     0.

COEFFICIENTS OF POLYNOMIAL
    -0.7118248E 00     0.
     0.                0.1010933E 00
     0.1000000E 01    -0.
    -0.                -0.3882643E 00
    -0.7139179E 00     0.
     0.                0.7969664E-01
     0.1757623E-01    -0.
     0.                0.
    -0.4731444E-03     0.

INTERMEDIATE ROOTS OF POLYNOMIAL

 -1.52848E-01  1.20000E-01  1.52848E-01  1.20000E-01  7.73953E-01  3.95807E-01  1.22012E-01 -6.46371E-02
 -7.73953E-01  3.95807E-01 -1.22012E-01 -6.46372E-02  1.03791E 00 -3.80160E-01 -1.03791E 00 -3.80160E-01

INTERMEDIATE POSITIVE ROOTS

  1.52848E-01  1.20000E-01  7.73953E-01  3.95807E-01  1.22012E-01 -6.46371E-02  1.03791E 00 -3.80160E-01

RE-ORDERED ALPHAS ( 1 ROW. 3 ZERO CASE )
```

```
  1.52848E-01  1.20000E-01  7.73953E-01  3.95807E-01  1.22012E-01 -6.46375E-02  1.03791E 00 -3.80160E-01

INTERMEDIATE BETA B

  0.           0.           2.06950E-11  5.01652E-11 -6.58226E-11  4.09002E-12  2.26542E-11 -6.97317E-11
  1.00000E-10  0.           0.           0.           0.           0.           0.           0.
  0.           0.           2.18195E-11 -5.38595E-11 -2.47263E-10  5.44002E-10 -2.09302E-11 -4.05048E-11
  0.           0.           1.00000E 00  0.           1.00000E 00  0.           1.00000E 00  0.

INTERMEDIATE L MATRIX BY COLUMNS

  0.           0.           1.14636E 00  0.           0.           0.           0.           0.
  6.20671E 00  5.25723E 00  0.           0.           2.50857E 00 -5.32668E 00 -2.21128E 00  1.82950E 00
 -3.26657E 01 -1.40485E 01 -0.          -0.          -4.56358E 00  9.96079E 00 -2.11046E 01 -1.07797E 01
  5.75671E 00 -7.82842E 00  0.           0.          -4.56311E 00 -4.98678E 00 -1.82049E 00 -1.43625E 00

VS =  0.3487601E 04     F(VS) = -0.4064251E 00 -0.1963597E 00     MAG =  0.4522477E 00

COEFFICIENTS OF POLYNOMIAL
    -0.6029385E 24     0.
     0.                0.8562924E 23
     0.8465833E 24     0.
    -0.                -0.3288657E 24
    -0.6046426E 24     0.
     0.                0.6749308E 23
     0.1485528E 23     0.
    -0.                0.
    -0.3959609E 21     0.

COEFFICIENTS OF POLYNOMIAL
    -0.7118658E 00     0.
     0.                0.1010591E 00
     0.1000000E 01    -0.
    -0.                -0.3882788E 00
    -0.7138779E 00     0.
     0.                0.7968644E-01
     0.1753904E-01    -0.
     0.                0.
    -0.4722181E-03     0.

INTERMEDIATE ROOTS OF POLYNOMIAL

 -1.52725E-01  1.20000E-01  1.52725E-01  1.20000E-01  7.73945E-01  3.95802E-01  1.21937E-01 -6.46346E-02
 -7.73945E-01  3.95802E-01 -1.21937E-01 -6.46348E-02  1.03790E 00 -3.80157E-01 -1.03790E 00 -3.80157E-01

INTERMEDIATE POSITIVE ROOTS

  1.52725E-01  1.20000E-01  7.73945E-01  3.95802E-01  1.21937E-01 -6.46346E-02  1.03790E 00 -3.80157E-01

RE-ORDERED ALPHAS ( 1 ROW, 3 ZERO CASE )

  1.52725E-01  1.20000E-01  7.73945E-01  3.95802E-01  1.21937E-01 -6.46346E-02  1.03790E 00 -3.80157E-01

INTERMEDIATE BETA B

  0.           0.           2.06942E-11  5.01658E-11 -6.58268E-11  4.08805E-12  2.26534E-11 -6.97316E-11
  1.00000E-10  0.           0.           0.           0.           0.           0.           0.
  0.           0.           2.18210E-11 -5.38589E-11 -2.47544E-10  5.44229E-10 -2.09306E-11 -4.05041E-11
  0.           0.           1.00000E 00  0.           1.00000E 00  0.           1.00000E 00  0.
```

```
    0.1753852E-01    -0.
    0.                0.
   -0.4722051E-03     0.

INTERMEDIATE ROOTS OF POLYNOMIAL

 -1.52723E-01  1.20000E-01  1.52723E-01  1.20000E-01  7.73945E-01  3.95802E-01  1.21936E-01 -6.46346E-02
 -7.73945E-01  3.95802E-01 -1.21936E-01 -6.46347E-02  1.03790E 00 -3.80157E-01 -1.03790E 00 -3.80157E-01

INTERMEDIATE POSITIVE ROOTS

  1.52723E-01  1.20000E-01  7.73945E-01  3.95802E-01  1.21936E-01 -6.46346E-02  1.03790E 00 -3.80157E-01

RE-ORDERED ALPHAS ( 1 ROW, 3 ZERO CASE )

  1.52723E-01  1.20000E-01  7.73945E-01  3.95802E-01  1.21936E-01 -6.46346E-02  1.03790E 00 -3.80157E-01

INTERMEDIATE BETA B

  0.           0.           2.06942E-11  5.61658E-11 -6.58269E-11  4.08808E-12  2.26533E-11 -6.97316E-11
  1.00000E-10  0.           0.           0.           0.           0.           0.           0.
  0.           0.           2.18210E-11 -5.38589E-11 -2.47548E-10  5.44232E-10 -2.09307E-11 -4.05041E-11
  0.           0.           1.00000E 00  0.           1.00000E 00  0.           1.00000E 00  0.

INTERMEDIATE L MATRIX BY COLUMNS

  0.           0.           1.14542E 00  1.28000E-08  0.           0.           0.           0.
  6.20861E 00  5.29728E 00  0.           0.           2.50863E 00 -5.32645E 00 -2.21131E 00  1.82953E 00
 -3.26236E 01 -1.40656E 01 -0.          -0.          -4.56617E 00  9.95881E 00 -2.11126E 01 -1.07904E 01
  5.75658E 00 -7.82836E 00  0.           0.          -4.56308E 00 -4.98660E 00 -1.82051E 00 -1.43626E 00

VS =  0.3487689E 04     F(VS) =  0.8723089E-04  0.6594125E-04     MAG =  0.1093503E-03
```

```
COEFFICIENTS OF POLYNOMIAL
    -0.6025385E 24      0.
     0.                 0.8562924E 23
     0.8469826E 24      0.
    -0.                -0.3288656E 24
    -0.6046417E 24      0.
     0.                 0.6749291E 23
     0.1465483E 23      0.
    -0.                -0.1870369E 14
    -0.3955498E 21      0.

COEFFICIENTS OF POLYNOMIAL
    -0.7118664E 00      0.
     0.                 0.1010592E 00
     0.1000000E 01     -0.
    -0.                -0.3882790E 00
    -0.7138773E 00      0.
     0.                 0.7568629E-01
     0.1753853E-01     -0.
     0.                 0.
    -0.4722054E-03      0.

INTERMEDIATE ROOTS OF POLYNOMIAL

 -1.52723E-01  1.20000E-01  1.52723E-01  1.20000E-01  7.73945E-01  3.95802E-01  1.21936E-01 -6.46346E-02
 -7.73945E-01  3.95802E-01 -1.21936E-01 -6.46347E-02  1.03790E 00 -3.80157E-01 -1.03790E 00 -3.80157E-01

INTERMEDIATE POSITIVE ROOTS

  1.52723E-01  1.20000E-01  7.73945E-01  3.95602E-01  1.21936E-01 -6.46346E-02  1.03790E 00 -3.80157E-01

RE-ORDERED ALPHAS ( 1 ROW, 3 ZERO CASE )

  1.52723E-01  1.20000E-01  7.73945E-01  3.95602E-01  1.21936E-01 -6.46346E-02  1.03790E 00 -3.80157E-01

INTERMEDIATE BETA B

  0.           0.           2.06542E-11  5.01658E-11 -6.58268E-11  4.08817E-12  2.26533E-11 -6.97316E-11
  1.00000E-10  0.           0.           0.           0.           0.           0.           0.
  0.           0.           2.18210E-11 -5.38589E-11 -2.47547E-10  5.44232E-10 -2.09307E-11 -4.05041E-11
  0.           0.           1.00000E 00  0.           1.00000E 00  0.           1.00000E 00  0.

INTERMEDIATE L MATRIX BY COLUMNS

  0.           0.           1.14542E 00  1.28000E-08  0.           0.           0.           0.
  6.20861E 00  5.29728E 00  0.           0.           2.50863E 00 -5.32645E 00 -2.21131E 00  1.82953E 00
 -3.26236E 01 -1.40655E 01 -0.          -0.          -4.56614E 00  9.95880E 00 -2.11126E 01 -1.07903E 01
  5.75658E 00 -7.82836E 00  0.           0.          -4.56308E 00 -4.98660E 00 -1.82051E 00 -1.43626E 00

VS =  0.3487689E 04     F(VS) =  0.2110807E-03  0.1900636E-04     MAG =  0.2119346E-03

COEFFICIENTS OF POLYNOMIAL
    -0.6025385E 24      0.
     0.                 0.8562924E 23
     0.8469826E 24      0.
    -0.                -0.3288656E 24
    -0.6046417E 24      0.
     0.                 0.6749291E 23
     0.1465482E 23      0.
    -0.                 0.
```

```
    -C.2999455E 21      0.

COEFFICIENTS OF POLYNOMIAL
    -C.7118664E CO      0.
     C.                 0.1010992E 00
     0.10C0000E C1     -0.
    -0.                -0.3E82790E 00
    -0.7138773E 00      0.
     0.                 0.7568629E-01
     C.1753852E-C1     -0.
     0.                 0.
    -0.4722051E-C3      0.

INTERMEDIATE ROOTS OF POLYNOMIAL

 -1.52723E-01  1.20000E-01  1.52723E-01  1.20C00E-01  7.73945E-01  3.95802E-01  1.21936E-01 -6.46346E-02
 -7.73945E-01  3.95802E-01 -1.21936E-01 -6.46347E-02  1.03790E 00 -3.80157E-01 -1.03790E 00 -3.80157E-01

INTERMEDIATE POSITIVE ROOTS

  1.52723E-01  1.20000E-01  7.73945E-01  3.95802E-01  1.21936E-01 -6.46346E-02  1.03790E 00 -3.80157E-01

RE-ORDERED ALPHAS ( 1 ROW, 3 ZERO CASE )

  1.52723E-0C  1.2C000E-01  7.73945E-01  3.95802E-01  1.21936E-01 -6.46346E-02  1.C3790E 00 -3.80157E-01

INTERMEDIATE BETA B

  0.           0.           2.06942E-11  5.01658E-11 -6.58269E-11  4.08808E-12  2.26533E-11 -6.97316E-11
  1.0C000E-10  0.           0.           0.           0.           0.           0.           0.
  0.           0.           2.18210E-11 -5.38589E-11 -2.47548E-10  5.44232E-10 -2.09307E-11 -4.05041E-11
  0.           0.           1.00000E 00  0.           1.00000E 00  0.           1.00000E 00  0.

INTERMEDIATE L MATRIX BY COLUMNS

  0.           0.           1.14542E 00  1.28000E-08  0.           0.           0.           0.
  6.20861E 00  5.29728E 00  0.           0.           2.5C863E 00 -5.32645E 00 -2.21131E 00  1.82953E 00
 -3.26236E 01 -1.40656E 01 -0.          -0.          -4.56617E 00  9.95881E 00 -2.11126E 01 -1.07904E 01
  5.75658E 00 -7.82836E 00  0.           0.          -4.56308E 00 -4.58660E 00 -1.82051E 00 -1.43626E 00

VS =  0.3487689E 04     F(VS) =  0.8576001E-04  0.4355446E-04     MAG =  0.9636790E-04

COEFFICIENTS OF POLYNOMIAL
    -C.6025385E 24      0.
     0.                 0.8562924E 23
     0.8465826E 24      0.
    -0.                -0.3288656E 24
    -0.6046417E 24      0.
     0.                 0.6749291E 23
     0.1485482E 23      0.
    -C.                 0.
    -0.3999495E 21      0.

COEFFICIENTS OF POLYNOMIAL
    -C.7118664E 00      0.
     0.                 0.1C10992E 00
     0.10C0000E C1     -0.
    -0.                -0.3E8279CE 00
    -0.7138773E CC      0.
     0.                 0.7568629E-01
```

```
INTERMEDIATE L MATRIX BY COLUMNS

  0.-          0.           1.14543E 00  1.28000E-08  0.           0.           0.           0.
  6.20861E 00  5.29728E 00  0.           0.           2.50863E 00 -5.32645E 00 -2.21131E 00  1.82953E 00
 -3.26234E 01 -1.40654E 01 -0.          -0.          -4.56615E 00  9.95883E 00 -2.11125E 01 -1.07902E 01
  5.75658E 00 -7.82836E 00  0.           0.          -4.563C8E 00 -4.98661E 00 -1.82051E 0C -1.43626E 0C

VS =  0.3487688E C4     F(VS) = -0.5621333E-C2 -0.2856658E-02     MAG =  0.6305544E-02

COEFFICIENTS OF POLYNOMIAL
    -C.6029385E 24     0.
     0.                0.8562924E 23
     C.8469826E 24     0.
    -0.               -0.3288656E 24
    -C.6046417E 24     0.
     0.                0.6749291E 23
     0.1485482E 23     0.
    -0.                0.
    -0.3599455E 21     0.

COEFFICIENTS OF POLYNOMIAL
    -C.7118664E 00     0.
     0.                0.1010992E 00
     0.1000000E C1    -0.
    -0.               -0.3882790E 00
    -C.7138773E 00     0.
     0.                0.7568629E-01
     0.1753852E-C1    -0.
     0.                0.
    -0.4722051E-03     0.

INTERMEDIATE ROOTS OF POLYNOMIAL

 -1.52723E-01  1.20000E-01  1.52723E-01  1.20G00E-01  7.73945E-01  3.95802E-01  1.21936E-01 -6.46346E-02
 -7.73545E-01  3.95802E-01 -1.21936E-01 -6.46347E-02  1.03790E 00 -3.80157E-01 -1.03790E 00 -3.80157E-01

INTERMEDIATE POSITIVE ROOTS

  1.52723E-01  1.20000E-01  7.73945E-C1  3.95E02E-01  1.21936E-01 -6.46346E-02  1.03790F 00 -3.80157E-01

RE-ORDERED ALPHAS ( 1 ROW, 3 ZERO CASE )

  1.52723E-01  1.20000E-01  7.73945E-01  3.55E02E-01  1.21936E-01 -6.46346E-02  1.03790E 00 -3.80157E-01

INTERMEDIATE BETA B

  0.           0.           2.06942E-11  5.01658E-11 -6.58269E-11  4.08808E-12  2.26533E-11 -6.97316E-11
  1.00000E-10  0.           0.           0.           0.           0.           0.           0.
  0.           0.           2.18210E-11 -5.38589E-11 -2.47548E-10  5.44232E-10 -2.09307E-11 -4.05041E-11
  0.           0.           1.00000E 00  0.           1.00000E 00  0.           1.00000E 00  0.

INTERMEDIATE L MATRIX BY COLUMNS

  0.           0.           1.14542E 00  1.28C00E-C8  C.           0.           0.           0.
  6.20861E 00  5.29728E 00  0.           0.           2.50863E 00 -5.32645E 00 -2.21131E 00  1.82953E 00
 -3.26236E 01 -1.40656E 01 -0.          -0.          -4.56617E 00  9.95881E 00 -2.11126E 01 -1.07904E 01
  5.75658E 00 -7.82836E 00  0.           0.          -4.563C8E 00 -4.98660E 00 -1.82051E 00 -1.43626E 00

VS =  0.3487689E 04     F(VS) =  0.1979960E-04  0.4836713E-04     MAG =  0.5226283E-C4
```

```
                    KS = 0     LITHIUM NIOBATE

      EPSLON =  0.1C00000E-10   CLOSENESS OF DETERMINANT TO ZERO
      KL     =  0               0 = CCMPUTE FOURTH RCW OF L MATRIX
                                1 = SET FOURTH ROW = 1
      KM     =  0               0 = ELECTRIC FIELD (COTH)
                                1 = MAGNETIC FIELD (TANH)
      MAX    = 25               MAXIMUM NUMBER OF ITERATIGNS
      N      =  6               NUMBER OF ITERATIONS ACTUALLY USED
      MU B   =  C.9000000E 02       LAMDA B =  0.
      NU B   =  C.9000000E 02       LAMDA A =  0.1500000E 12
      MU A   =  0.2850000E 11
      RHO A  =  C.1888000E 05       RHO B   =  0.47000C0E 04
      WH     =  0.1C000000E 11
      VS 0   =  0.3480000E 04   INITIAL VELOCITY

      VS     =  0.3487689E 04   FINAL VELOCITY SUCH THAT F(VS) .LT. EPSLON
      1/VS   =  0.2867228E-03   INVERSE OF VS

      ..... DETERMINANT = ( 0.8723C89E-04, 0.6594125E-04) .....

      FINAL ROOTS OF POLYNOMIAL              DIVIDED BY VS

    (-0.1527228E 00, C.1200000E 00)       (-0.4378912E-C4, 0.3440674E-04)
    ( 0.1527228E 00, C.1200000E 00)       ( 0.4378912E-04, 0.3440674E-04)
    ( 0.7739447E 00, 0.3958016E 00)       ( 0.2219076E-03, 0.1134854E-03)
    ( 0.1219358E 00,-0.6463462E-01)       ( 0.3496179E-C4,-0.1853222E-04)
    (-0.7739447E 00, 0.3958016E 00)       (-0.2219076E-C3, 0.1134854E-03)
    (-0.1219358E 00,-0.6463470E-01)       (-0.3496178E-04,-0.1853224E-04)
    ( 0.1C37905E 01,-C.3801570E 00)       ( 0.2975909E-03,-0.1089997E-03)
    (-0.1037905E 01,-0.3801570E 00)       (-0.2975909E-03,-0.1089997E-03)
```

```
*** F I N A L   A N S W E R S ***

                PARTIAL FIELD
              RELATIVE AMPLITUDES

 1  ( 0.              , 0.              )
 2  (-0.7201401E 00, 0.8085244E 00)
 3  (-0.1512902E 00,-0.1377944E 00)
 4  ( 0.1000000E 01, 0.              )

.....WX = 0.

                STRESS COMPONENTS

 T31 = (-5.8207661E-11, 0.              )
 T32 = (-0.             , 0.              )
 T33 = ( 0.             ,-1.4551915E-11)
 T11 = (-4.8295741E-03, 1.3573207E-03)
 T12 = (-0.             , 0.              )
 T22 = (-1.3872618E-03, 3.9637460E-04)

                STRAIN COMPONENTS

 S11 = (-2.3131124E-14, 6.3902930E-15)
 S22 = ( 0.             , 0.              )
 S33 = ( 7.8339108E-15,-2.1363742E-15)
 S12 = (-0.             , 0.              )
 S13 = ( 5.8991011E-16,-2.5035702E-16)
 S23 = (-0.             , 0.              )

              TIME AVERAGE POWER FLOW

  P1M = ( 2.2182838E-09,-2.5693692E-11)
  P2M = (-0.             , 0.              )

              ELECTRIC DISPLACEMENT

  D1 = (-7.7928271E-14, 1.7353723E-14)
  D2 = (-0.             , 0.              )
  D3 = (-3.2623770E-16,-1.7019480E-15)

              MECHANICAL DISPLACEMENT
             MAGNITUDE        PHASE
  U1 =  8.3696159E-11  -105.444
  U2 =  0.                 0.
  U3 =  1.2363921E-10   -15.145

ELECTRIC POTENTIAL MAGNITUDE =  6.8294138E-01  PHASE =   79.149

                ELECTRIC FIELD

  E1 = (-1.9231359E-04, 3.6E63880E-05)
  E3 = ( 3.8187697E-05,-1.3321136E-05)
             MECHANICAL DISPLACEMENT
              -0.22282974E-10   -0.80675376E-10
               0.                0.
               0.11934538E-09   -0.32300663E-10
             ELEC. POT. MAGNITUDE
               0.12859710E 00    0.67072476E 00
```

```
9 112245 C $ASSIGN        SYSLB4
9 112451 C $STOP

9 112451 O  PERIPHERAL FILE POSITIONS AT END OF JOB

9 112451 O  SYSPP1            REC. 00942, FILE 00000
9 112451 C  SYSOU1            REC. 03745, FILE 00000
9 112451 O  SYSIN1            REC. 00002, FILE 00002

9 112451 C END OF JOB
```

01 LAITC5. EOF.

REC= 00000 FIL=

```
4*104318 JOB  109 REEL CRTPLT IS REQUIRED
4*1104C9 JOB  109READY CRTPLT ON UNIT C3
```

```
001094 1614 N4CONWAY      PHASE        TIME OFF WAS 112451    12/31/69
   ***7C44 SERVICE*****************
   *                               *
   *   2159 CARDS READ             *
   *                               *
   *    979 CARDS PUNCHED          *
   *                               *
   *   3716 LINES PRINTED          *
   *                               *
   ***7C941I SERVICE***************
   *                               *
   *   2.07 MIN. PRE-EXECUTION     *
   *                               *
   *    .13 MIN. EXECUTION         *
   *                               *
   *********************************
```

REFERENCES

(1) Campbell, J. J. and Jones, W. R., "A Method for Estimating Optimal Crystal Cuts and Propagation Directions for Excitation of Piezoelectric Surface Waves," IEEE Transactions on Sonics and Ultrasonics, SU15, 1968.

(2) Ingebrigtsen, K. A., "Surface Waves in Piezoelectrics," Journal of Applied Physics 40, June 1969.

(3) Collins, J. H, Gerard, H. M., and Shaw, H. J., "High-performance Lithium Niobate Acoustic Surface Wave Transducers and Delay Lines," Applied Physics Letters 13, 1 November 1968.

(4) Bleustein, J. L., "A New Surface Wave in Piezoelectric Materials," Applied Physics Letters 13, 15 December 1968.

(5) Lim, T. C. and Farnell, G. W., "Character of Pseudo Surface Waves on Anisotropic Crystals," Journal of Acoustical Society of America, 45, November 1969.

(6) Farnell, G. W., "Properties of Elastic Surface Waves," Department of Electrical Engineering and Eaton Electronics Laboratory, McGill University (January 1969).

(7) Tseng, C. C. and White, R. M., "Propagation of Piezoelectric and Elastic Surface Waves on the Basal Plane of Hexagonal Piezoelectric Cyrstals, Journal of Applied Physics 38, October 1967.

UNCLASSIFIED
Security Classification

DOCUMENT CONTROL DATA - R & D

(Security classification of title, body of abstract and indexing annotation must be entered when the overall report is classified)

1. ORIGINATING ACTIVITY *(Corporate author)* Hughes Aircraft Company, Ground Systems Group P.O. Box 3310 Fullerton, California 92634	2a. REPORT SECURITY CLASSIFICATION Unclassified 2b. GROUP

3. REPORT TITLE

THEORETICAL INVESTIGATION OF ACOUSTIC SURFACE WAVES ON PIEZOELECTRIC CRYSTALS

4. DESCRIPTIVE NOTES *(Type of report and inclusive dates)*
Scientific Final Period Covered: 12/1/68 - 11/30/69

Approved:
20 January 1970

5. AUTHOR(S) *(First name, middle initial, last name)*
William R. Jones
James J. Campbell
Sonja L. Veilleux

6. REPORT DATE 4 December 1969	7a. TOTAL NO. OF PAGES 249	7b. NO. OF REFS 7
8a. CONTRACT OR GRANT NO. F19628-69-C-0132 b. PROJECT NO., Task No., Work Unit No. 5635-03-01 c. DoD Element: 61102F d. DoD Subelement: 681305	9a. ORIGINATOR'S REPORT NUMBER(S) FR 69-14-1312 9b. OTHER REPORT NO(S) *(Any other numbers that may be assigned this report)* AFCRL-70-0020	

10. DISTRIBUTION STATEMENT

2 – This document is subject to special export controls and each transmittal to foreign governments or foreign nationals may be made only with prior approval of AFCRL (CRDP), L. G. Hanscom Field, Bedford, Massachusetts 01730

11. SUPPLEMENTARY NOTES TECH, OTHER	12. SPONSORING MILITARY ACTIVITY Air Force Cambridge Research Laboratories (CRD) L. G. Hanscom Field Bedford, Massachusetts 01730

13. ABSTRACT

This report describes the analyses of several piezoelectric and pure elastic surface wave propagation problems and computer programs which implement their numerical study. In addition, the formal analysis of an electric current line source located above a piezoelectric crystal half space is presented in some detail.

DD FORM 1 NOV 65 1473

UNCLASSIFIED
Security Classification

UNCLASSIFIED
Security Classification

14. KEY WORDS	LINK A ROLE	LINK A WT	LINK B ROLE	LINK B WT	LINK C ROLE	LINK C WT
Wave Propagation						
Leaky Acoustic Surface Waves						
Piezoelectric Crystal						

UNCLASSIFIED
Security Classification