UNCLASSIFIED

AD NUMBER

AD864089

NEW LIMITATION CHANGE

TO

Approved for public release, distribution unlimited

FROM

Distribution authorized to DoD only; Test and Evaluation; DEC 1969. Other requests shall be referred to Naval Air Systems Command, Attn: AIR-604, Washington, DC.

AUTHORITY

Naval Air Engineering Center ltr dtd 17 Aug 1972

THIS PAGE IS UNCLASSIFIED

U. S. NAVAL AIR ENGINEERING CENTER

PHILADELPHIA, PENNSYLVANIA

AD864089

ENGINEERING DEPARTMENT (SI)

NAEC-ENG-7583 CODE IDENT. NO. 80020 11 Dec 1969

FLIGHT DECK ARRESTING GEAR
AND BARRICADE CONFIGURATION
CRITERIA FOR MARK 7 MOD 3
ARRESTING ENGINE

NOTICE

Reproduction of this document in any form by other than naval activities is not authorized except by special approval of the Secretary of the Navy or the Chief of Naval Operations as appropriate.

The following Espionage notice can be disregarded unless this document is plainly marked CONFIDENTIAL or SECRET.

This document contains information affecting the national defense of the United States within the meaning of the Espionage Laws, Title 18, U.S.C., Sections 793 and 794. The transmission or the revelation of its contents in any manner to an unauthorized person is prohibited by law.

NAVAL AIR ENGINEERING CENTER
PHILADELPHIA, PENNSYLVANIA 19112

ENGINEERING DEPARTMENT (SI)

NAEC-ENG-7593 CODE IDENT. NO. 80020 11 Dec 1969

FLIGHT DECK ARRESTING GEAR AND BARRICADE CONFIGURATION CRITERIA FOR MARK 7 MOD 3 ARRESTING ENGINE

Naval Air Systems Cmd
(AIR-604) Wash DC 20360

PREPARED BY

APPROVED BY

4ND-P-299 (REV 6-67) NAVY-NPS 4ND PHILA., PA.

12/11/69 ul

ABSTRACT

This report presents information regarding flight deck arresting gear & barricade configuration criteria for the Mk. 7 Mod. 3 arresting engines and is provided for use in the preparation of installation plans for new aircraft carriers or on present carriers planning utilization of Mk. 7 Mod. 3 arresting gear.

I INTRODUCTION

The purpose of this report is to provide information for use in the preparation of Mark 7 Mod 3 arresting gear installation plans for new carriers or existing carriers which are to be reconfigured to utilize new gear.

II SUMMARY

The installation criteria for the arresting engine and associated equipment, i. e., deck pendant, barricade, flight deck and arresting gear control station were determined based upon past operational experiences and reflect the optimum design configuration features for future recovery systems.

III CONCLUSION

Criteria contained herein has been compiled and developed based on past experience in order to obtain the best operational features in future recovery system reconstruction and new carrier design. Deviations from criteria established within this report should initially be approved by the Naval Air Engineering Center. In addition, Preliminary guidance arrangements and all pertinent recovery system drawings should be forwarded to the Naval Air Engineering Center for review and approval.

IV TABLE OF CONTENTS

		PAGE
I	INTRODUCTION	ii
II	SUMMARY	iii
III	CONCLUSION	iv
V	LIST OF FIGURES	vi
VI	REPORT TEXT	1
	A. GENERAL CRITERIA	1
	B. DECK PENDANT CRITERIA	5
	C. BARRICADE CRITERIA	6
	D. FLIGHT DECK CRITERIA	6
	E. ARRESTING GEAR CONTROL STATION	7

V LIST OF FIGURES

FIGURE	TITLE	PAGE
1.	Engine, Arresting, Mark 7 Mod 3 Installation Data (NAEC Drawing No. 02-61946).	8
2.	Damper Sheave, Shipboard Typical Installation (NAEC Drawing No. 613937).	9
3.	Damper Installation, Cable Anchor, Deck and Overhead mounted (NAEC Drawing No. 613088).	10
4.	Barricade Stanchion Hydraulic Control Installation (NAEC Drawing No. 504866).	11
5.	Control Installation, Manual Type Retracting Valve, Constant Runout, Increased Capacity (NAEC Drawing No. 504206).	12
6.	Arresting Engine Locations and Drive System, Proposed (NAEC Drawing No. 616363).	13
7.	Drive System, Arresting Gear Typical Installation, 1-3/8 Diameter Cable, 28 P. D. (NAEC Drawing No. 612792).	14
8.	Drain and Fill Arrangement, Mark 7 Mod 3 Arresting Engine (NAEC Drawing No. 616111).	15
9.	Drain and Fill Arrangement, Damper Sheave Fluid (NAEC Drawing No. 616109).	16
10.	Sheave, Retracting Wrapping and Unwrapping Installation, Typical, 1-3/8 Diameter Cable, 28 P. D. (NAEC Drawing No. 612796).	17
11.	Installation Data, Mark 7 Mod 3 Arresting gear, Terminal Impact Pad, Metal Deck (NAEC Drawing No. 419045).	18
12.	Typical Barricade Stanchion Hydraulic Control Arrangement (NAEC Drawing No. 608926).	19
13.	Flight Deck Study, Mark 7 Mod 3 Arresting Gear (NAEC Drawing No. 616110).	20

V LIST OF FIGURES (Cont'd.)

FIGURE	TITLE	PAGE
14.	Wire Support and Controls, Individual Cylinder Type, Typical Installation (NAEC Drawing No. 40-61298).	21
15.	Installation Data, Wire Supports, Armored Deck Carriers (NAEC Drawing No. 502942).	22

VI REPORT TEXT

A. GENERAL CRITERIA:

1. Estimated weight and space requirements for the arresting engines and associated equipment are shown on Figures 1 through 5. Arresting engines should be placed athwartship so that lengths of port and starboard purchase cable from the deck sheave to the engine movable crosshead are as nearly equal as possible. In addition, Figure 6 shows an example of the desired positioning of the engines; the crosshead shall be on the starboard side of the ship when the engine is reeved, as shown in Figure 1.

2. Pendant engine deck runout is 349 feet to airplane tailhook. Barricade engine deck runout is 409 feet 6 inches to airplane nosewheel, which includes barricade slack takeup.

3. The drive system uses 28 inch pitch diameter sheaves throughout, as shown in Figure 7 with the exception of the 24 inch anchor damper turn-around sheave, as noted.

4. The choice number of sheaves (minimum) in the drive system for one engine is 10; 5 per each side of the engine extending to the flight deck. Description of these sheaves directly from one side of engine to the flight deck, is as follows:

    a. On deck fairlead sheave

    b. Bottom stationary sheave of sheave damper assembly

    c. Crosshead sheave of sheave damper assembly

    d. Thru-Deck sheave

    e. Flight-Deck sheave

5. The minimum allowable cable wrap in the arresting gear fairlead system which includes the sheave dampers, is 15 degrees. There is one exception: the "Y" type sheave damper installation may use a minimum of 10 degrees of cable wrap around the bottom stationary sheave with the sheave damper in battery position.

6. Use "Y" type sheave dampers wherever possible, in preference to the "X" type. This arrangement is shown in Figure 2.

7. Direct access is required to sheave damper compartments from each arresting engine compartment to enable arresting gear personnel to move quickly from one compartment to another should emergency repairs be necessary during air operations. Access openings should be at least 24 inches by 36 inches with a 24 inch sill to permit passage of 28 inch pitch diameter sheaves which have an outside diameter of 29-1/8 inches. Access openings of 18 inches by 24 inches will not permit passage of the sheave and are not suitable.

8. Where two sheave dampers are housed in one compartment, a minimum clearance of 4 feet is required between components for inspection, lubrication and maintenance.

9. The Arresting Gear Shop and the Arresting Gear Storeroom should be centrally located as close as possible to the arresting engine compartments. The inclusion of two separate pouring compartments, approximately 12 feet x 16 feet is required. These should be on each side of the vessel, centrally located between and adjacent to all engine spaces. These compartments are to be used solely for pouring arresting gear cable terminals.

10. The arresting engine fluid drain and fill system should be centrally located as close as possible to the arresting engine compartments, as shown in Figure 8.

11. The sheave damper fluid drain and fill system should be centrally located among the sheave damper installations, as shown in Figure 9.

12. Provide longitudinal tracks for use with an overhead trolley in all arresting engine compartments. Tracks should be located over the center of each engine and over the engine compartment opening in the gallery deck. The tracks must extend the full length of the engine compartment. The overhead trolley must be capable of lifting 5 tons and must have a built-in automatic brake.

13. Retractable deck sheaves are to be installed in accordance with Figure 10. However, this installation should be restricted to pendant and barricade deck sheave locations where above deck obstructions interfere with airplane movement and cannot be tolerated. If no interference problem exists, the fixed horizontal deck sheave should be used. If a retractable deck sheave installation is desired, the following is necessary in order to maintain a minimum fleet angle between the retractable deck sheave and the through deck sheave. When the installation of the through deck sheave is not 90 degrees to the deck pendant line, the following principles apply:

    a. If the location of the through deck sheave must be positioned inboard, or less than 90 degrees to the deck pendant line, it is required that the distance between the retractable sheave and through deck sheave be made greater than the normal requirement as shown in Figure 10.

    b. If the location of the through deck sheave must be positioned outboard, or greater than 90 degrees to the deck pendant line, it is required that the distance between the retractable sheave and through deck sheave be made less than the normal requirement as shown in Figure 10.

14. Since the time required to rig a barricade is critical, it is recommended that the barricade webbing stowage compartment be located as close to the barricade stanchion as possible. The preferred location for this compartment is outboard of the starboard barricade stanchion. The compartment should be positioned so that the hatch rollers are perpendicular to the line of pull on the barricade webbing when it is being pulled onto the deck. If the barricade hatch is in the deck, the hatch cover must be "quick" opening, to reduce barricade rigging time to a minimum.

15. The material specification for the auxiliary air flask, which is to be furnished by the installing activity, should be QQ-S-682, FS 302, Finish 1, Grade B. (This material should justifiably be of a better grade than that used for the air flask on the arresting engine since the auxiliary flask is used at 3000 PSI as opposed to 400 to 800 PSI in the engine air flask.)

16. Terminal impact pads will be required for all deck pendant installations in accordance with Figure 11.

17. A sound powered phone (6 j g) jack box, tied into the arresting gear telephone circuit, should be provided at the following locations:

    a. Each arresting engine control panel

    b. Each sheave damper charging panel

    c. Each terminal pouring room

    d. Each arresting gear work shop

    e. Barricade hydraulic control station

    f. Arresting Gear deck edge control station

    g. LSO platform

    h. Pri-Fly

    i. Arresting Gear Flight Deck Officer

18. The face of all fluid gages, for sheave dampers, barricade power package, engine stowage tank and sheave damper stowage tank, should be suitably illuminated. Gage lights can be mounted on the back for the shine-thru type and for the metal encased gage, a light should be mounted to shine on, or reflect light onto the face of the gage. Also, battle lanterns should be installed in all engine compartments directed at the engine dial and engine control panel. In addition, installation of battle lanterns should be made in all sheave damper spaces - one directed at the sliding sheave and one at the sheave damper control panel.

19. Individual air stations must be provided in each of the various systems requiring an air supply (wire supports and controls, automatic lubrication system and anchor damper battery positioner) to ensure that these systems are furnished an adequate air supply. In addition, an air pressure gage must also be included near each station to render operating personnel assurance of adequate pressure in each system.

B. DECK PENDANT CRITERIA:

1. The deck pendant sheave span for use with a Mark 7 Mod 3 arresting engine may be between 120 and 130 feet. A 120 foot span is recommended. A span up to 130 feet provides no advantage but may be used, if required.

2. Deck sheave spans for each pendant should be as close to being equal as possible. If this is not achieved, the difference in length between deck pendants will provide severe logistic problems with possible installation errors. Variations must be avoided if at all possible.

3. All deck pendants must be in the "wrap-on" sheave arrangement, as shown in Figure 7.

4. All deck sheave span centers should be on the angled deck centerline if at all possible. If off-center positioning cannot be avoided, the centerline of the deck sheave span should not be more than two feet from either side of the angled deck centerline.

5. Deck pendant spacing for a deck sheave span between 120 feet and 130 feet should be as follows:

   Note: These figures are based on an airplane touchdown point between wires 2 and 3.

   a. No. 3 pendant should be 254 feet (+0 feet -4 feet) forward of the aft ramp.

   b. No. 2 pendant should be 40 feet (+4 feet -0 feet) aft of No. 3 pendant.

   c. No. 1 pendant should be 40 feet (+4 feet -0 feet) aft of No. 2 pendant.

   d. No. 4 pendant should be 40 feet (+4 feet -0 feet) forward of No. 3 pendant.

   Note: The distances given provide a proper landing area aft of the first wire based on the latest lens setting and hook to ramp clearance.

C. BARRICADE CRITERIA:

1. Figure 4 provides the required information for the installation of the barricade stanchion hydraulic control.

2. The barricade stanchion span should be 130 feet (± 5 feet). The sheave span should be 120 feet (+ 5 feet - 2 feet). Both the stanchion and the deck sheave should be on the same centerline. (It should be noted that if a minimum stanchion span is used "125 feet" and a maximum sheave span "125 feet" is used, they will overlap: they must then be separated and still stay within the spans listed above).

3. The off-center distance for the stanchion (and sheave) spans should not exceed two feet either to port or starboard of the landing area centerline.

4. The barricade should preferably be located 235 to 245 feet forward of the aft ramp; in no case should a barricade be placed less than 210 feet from the aft ramp. This is to assure that all of the aircraft's wheels are on the deck prior to engagement into the barricade webbing.

5. A "wrap-on" cable sheave arrangement is required for the barricade installation, as shown on Figure 12.

6. The barricade winch air motor, which is used to tension the barricade webbing system, must operate from a 90 psi minimum air supply (150 psi maximum) in order to provide proper tensioning of the webbing.

D. FLIGHT DECK CRITERIA:

1. The utilization of two basic landing area criteria are to be employed to evaluate the arresting gear arrangement. A typical arrangement is shown on Figure 13. All airplane wheels are to be safely on the deck, at full gear runout, to accommodate the following airplane landing patterns:

   a. Landings parallel to the angled deck centerline, twenty feet off-center to the port for all pendants and the barricade.

b. Landings on-center, angled to the port. This angle, the yaw angle, is presently set at a minimum of 7 degrees for all pendants and the barricade. This will accommodate airplanes landing at an angle to the landing area.

2. The requirement for airplane turn-around is 110 feet when measured from the airplane hook point on the angled deck centerline from the end of full runout of the No. 4 deck pendant.

3. The installation of wire supports is shown in Figure 14. Locations for wire supports are to be in accordance with data as shown in Figure 15.

E. ARRESTING GEAR CONTROL STATION:

1. To provide an unobstructed view of the landing area the optimum location for the "deck edge controls" are inside the carrier island just below Pri-Fly level. The island location also ensures personnel maximum protection from the environment, including noise. The second best location for the "deck edge controls" is on the starboard side of the vessel, away from the carrier island to permit an unobstructed view of incoming air craft and all pendants and the barricade from battery position to full runout.

NOTE: Port side deck edge controls are hazardous with regard to "wave-off" airplanes, or during a possible cable failure.

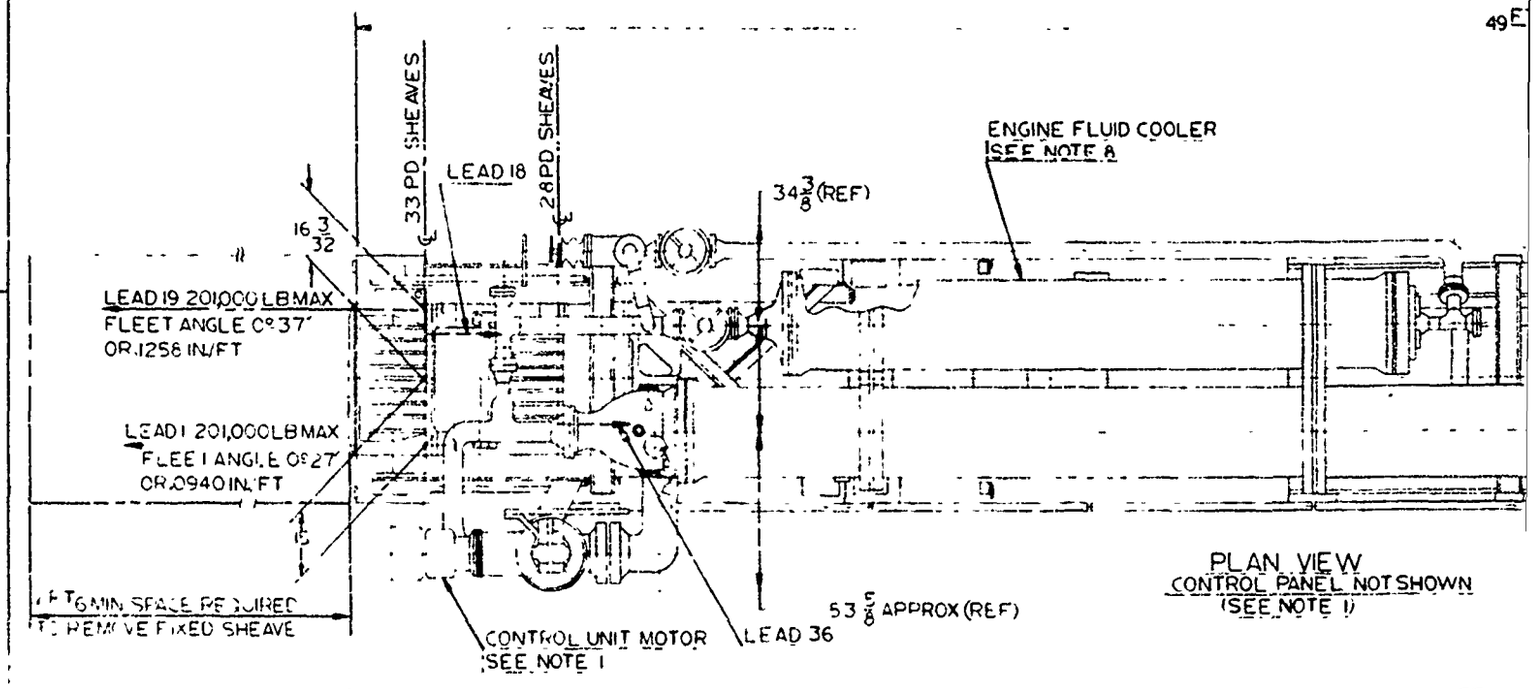
33 PD SHEAVES
28 PD SHEAVES
LEAD 18
ENGINE FLUID COOLER
SEE NOTE 8
34 3/8 (REF)
16 3/32
LEAD 19 201,000 LB MAX
FLEET ANGLE 0° 37'
OR .1258 IN/FT
LEAD 1 201,000 LB MAX
FLEET ANGLE 0° 27'
OR .0940 IN/FT
6 FT MIN SPACE REQUIRED
TO REMOVE FIXED SHEAVE
CONTROL UNIT MOTOR
SEE NOTE 1
LEAD 36
53 5/8 APPROX (REF)
PLAN VIEW
CONTROL PANEL NOT SHOWN
(SEE NOTE 1)

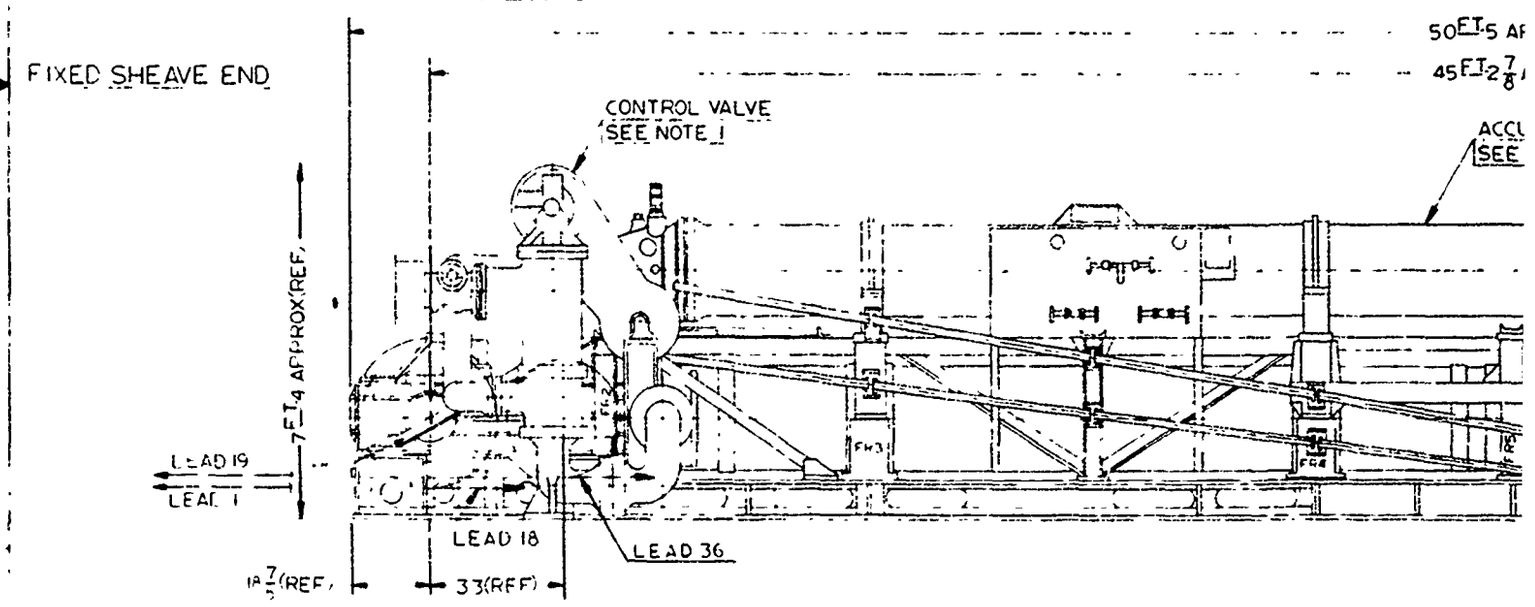
FIXED SHEAVE END
CONTROL VALVE
SEE NOTE 1
7 FT 4 APPROX (REF)
LEAD 19
LEAD 1
LEAD 18
LEAD 36
18 7/8 (REF)
33 (REF)

ELEVAT

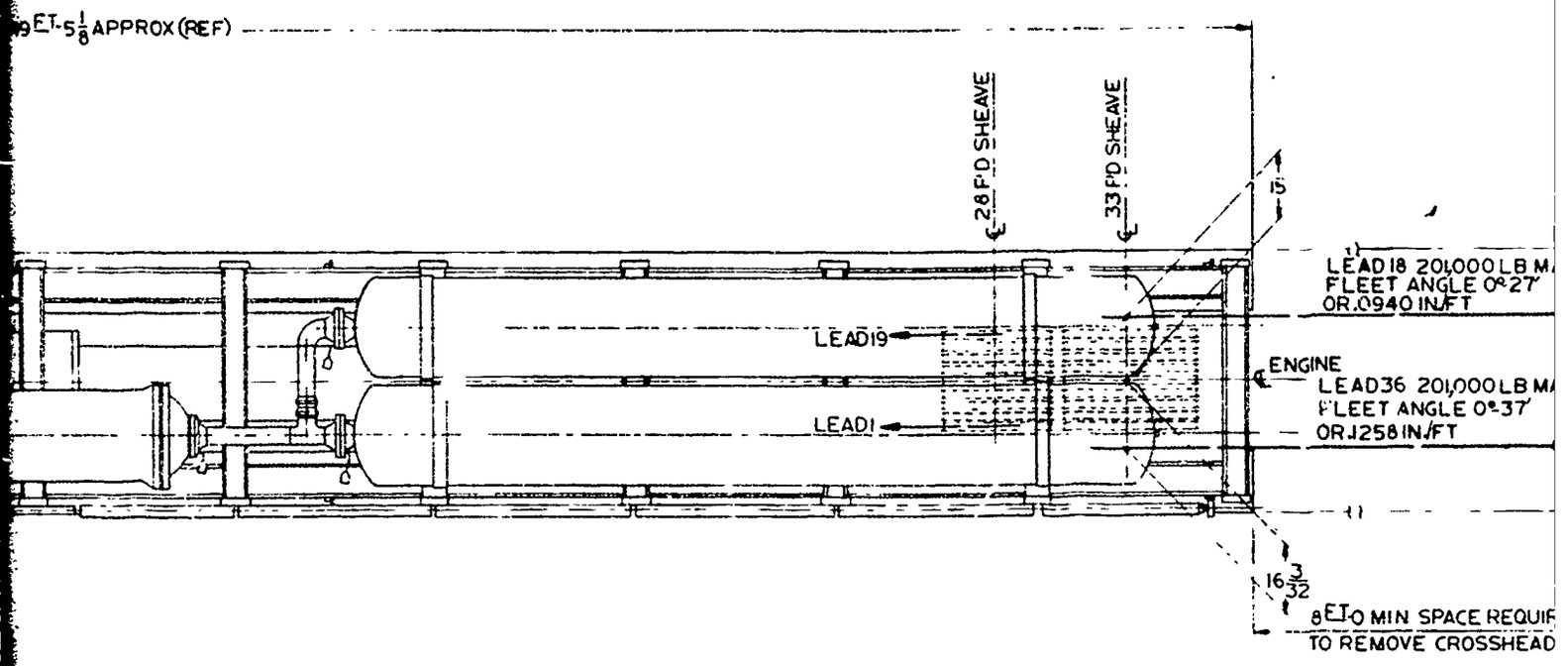

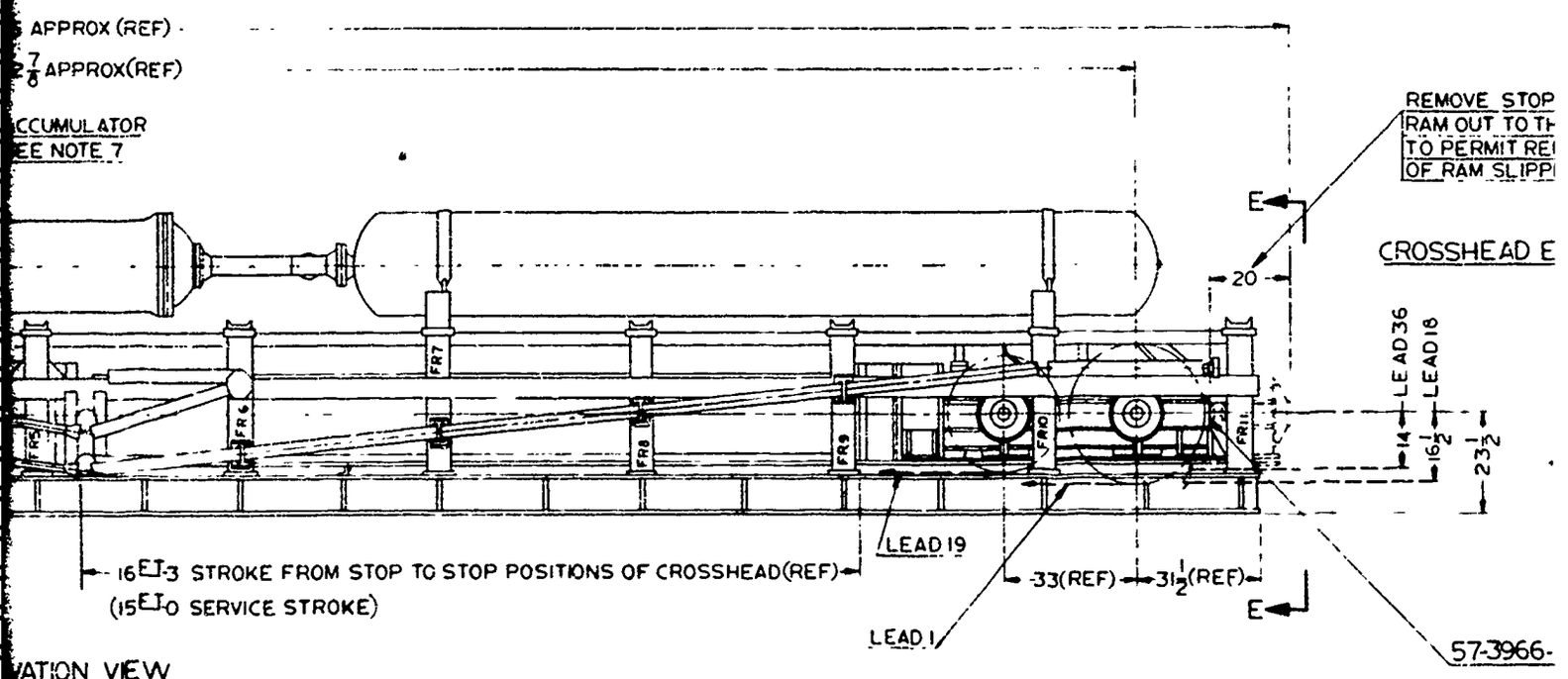

VATION VIEW

02-61946

2

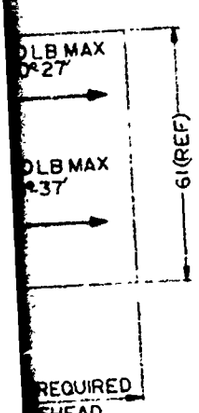

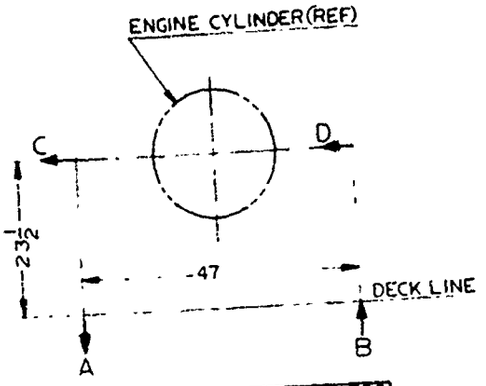

5-6-7-8-9-10-11	6200	6200	14300	14300
3 & 4	5400	5400	14300	14300
1 & 2	25 300	25 300	5800	5800
FRAME NO.	A	B	C	D

LOAD DIAGRAM
ALL LOADS IN POUNDS
(SEE NOTE 5)

STOP AND BACK
TO THIS POSITION
MIT REPLACEMENT
SLIPPERS

EAD END

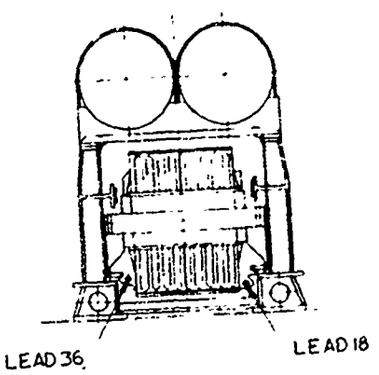

VIEW E-E

3966-1 STOP(REF)

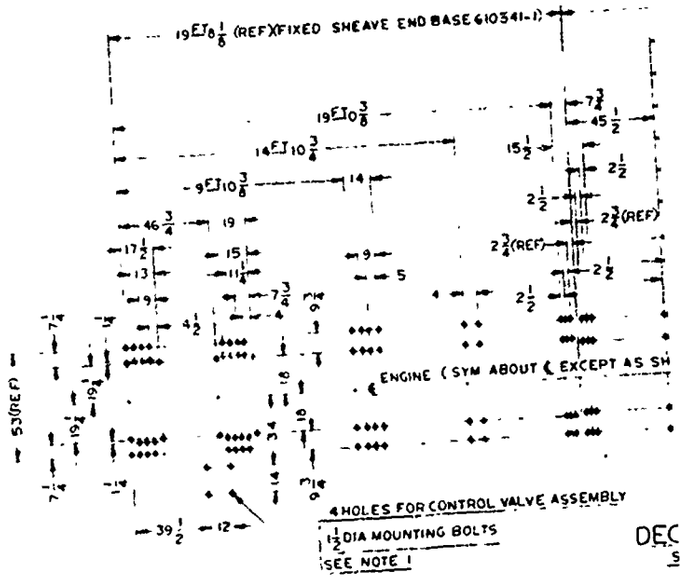

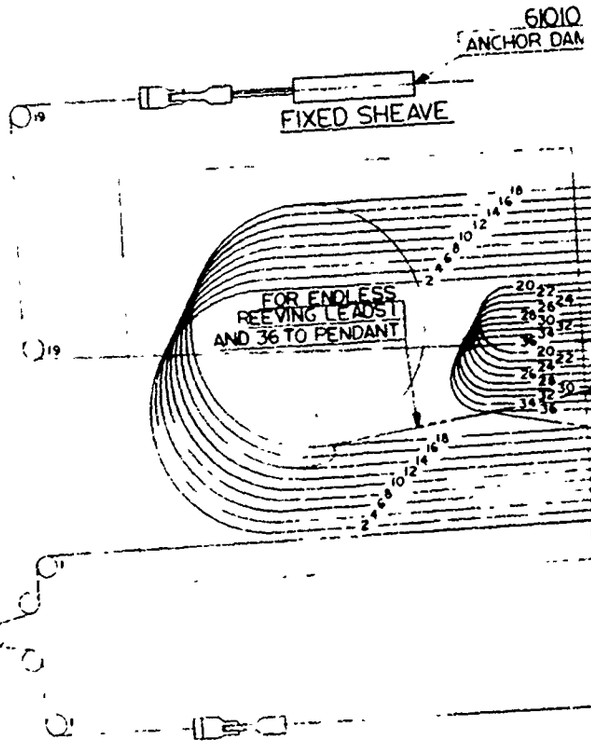

REEVING DIAGRAM (SEE N
18:1 RATIO; SINGLE PENDANT A
CABLE ANCHOR DAMPER
18:1 RATIO; ENDLESS REEVING
SINGLE PENDANT
SCALE: NONE

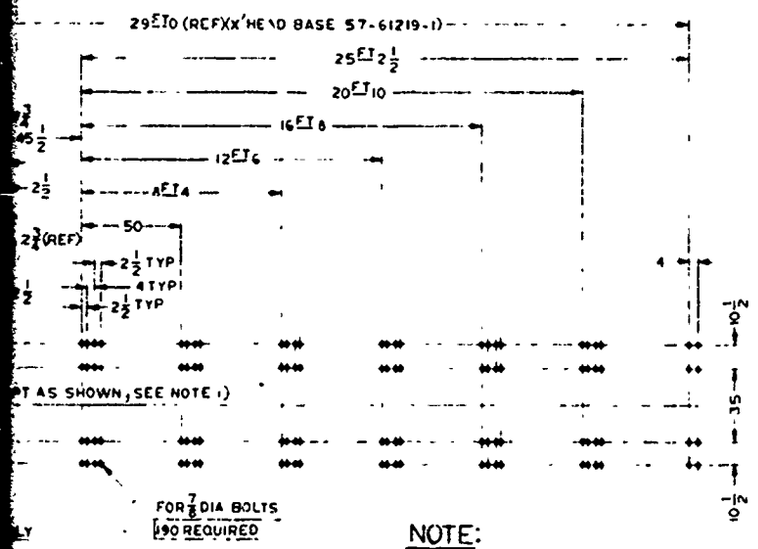

DECK BOLT PATTERN
SCALE: 3/8 = 1 FT 0

NOTE:
BOLT PATTERN IS FOR GENERAL INFORMATION ONLY; ACTUAL BOLT LOCATION SHOULD BE TEMPLATED FROM ENGINE BASE.

610100 (REF)
OR DAMPER INSTALLATION

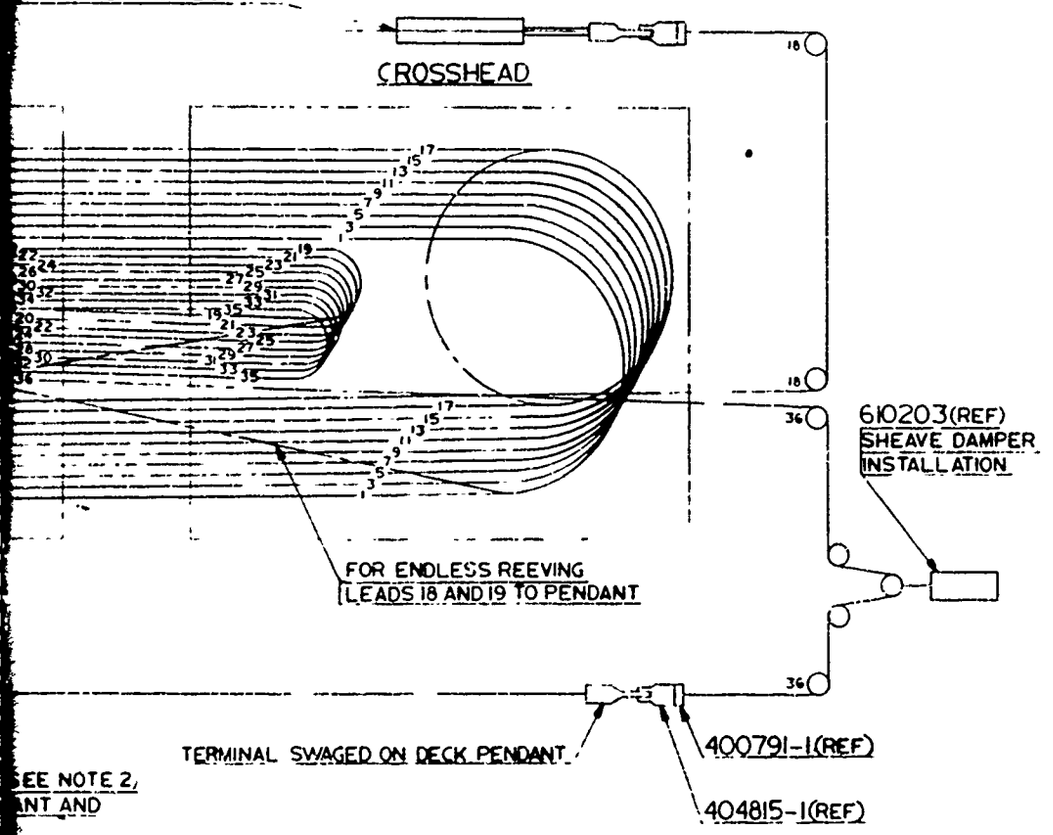

SEE NOTE 2,
ANT AND
VING

NOTES:

1. DATA SHOWN ON THIS ARRESTING ENGINE C CONVENIENT, ENGIN MOUNTED OPPOSITE PANEL MAY BE ASSE LOCATION, MODIFYING
2. THE CHOICE OF LE DETERMINED BY TH OF THE ENGINE AN APPROVAL OF THE ENGINEERING FAC
3. ON ENGINES WHICH CYLINDER SADDLE
4. THOROUGHLY CLEA
5. THE DECK SUPPOR LOADS AND MOMEN THESE LOADS ARE BREAKING STRENGT DYNAMIC CONDITION AND/OR ON OPPOSI SEE PLAN VIEW SH
6. AFTER INSTALLATIO HYDROSTATICALLY REPORT NAEL-EN
7. THE INSTALLING A COGNIZANCE THE F
   (a) A 3000 PSI A ACCUMULATOR
   (b) A 440 VOLT, OPERATION OF CAPACITY OF
   (c) A 110 VOLT, 60 OPERATION OF MUST BE NON
   (d) ALL NECESSA MIL-S-5000 L
   (e) ALL NECESSA CANDLE POWE ACCUMULATOR
   (f) AUXILIARY F ARRESTING E
8. SEA WATER OR FRE SUPPLIED BY SHIP WATER PRESSURE 200 PSI.
9. GENERAL DATA:
   (a) CABLE; 1 3/8 DIA (6 x CABLE 171,00
   (b) LENGTH OF C AGAINST STOP 831 FEET.
   (c) WEIGHT OF E
10. SUPPLEMENTARY SHEAVE END, 57 ARRESTING ASSE ASSEMBLY (WIT
(E) 11. BOLTING REQUIREME INSTRUCTION 9110

CLASSIFICATION O
CRITICAL - C TO
MAJOR M
MINOR - ALL OT

02-61946

NOTES:

1. DATA SHOWN ON THIS DRAWING IS FOR THE INSTALLATION OF A MK7 MOD3 ARRESTING ENGINE ON ALL TYPES OF VESSELS. WHEN NECESSARY, OR MORE CONVENIENT, ENGINE ASSEMBLY WITH CONTROL VALVE INSTALLATION MOUNTED OPPOSITE HAND FROM THAT SHOWN SHALL BE INSTALLED. CONTROL PANEL MAY BE ASSEMBLED IN POSITION SHOWN OR ANY OTHER CONVENIENT LOCATION, MODIFYING PIPING AS NECESSARY.
2. THE CHOICE OF LEAD CABLES, SHOWN IN REEVING DIAGRAM, TO BE DETERMINED BY THE INSTALLING AGENCY, DEPENDING ON THE FUNCTION OF THE ENGINE AND LOCAL INSTALLATION CONDITIONS, SUBJECT TO THE APPROVAL OF THE ENGINEERING DEPARTMENT OF THE NAVAL AIRCRAFT ENGINEERING FACILITY.
3. ON ENGINES WHICH ARE TO BE USED FOR ENDLESS REEVING, THE CYLINDER SADDLES MUST BE MODIFIED AS SHOWN ON DRAWING 57-50874.
4. THOROUGHLY CLEAN AND PRESERVE MANIFOLD PIPING PER MPR-1015.
5. THE DECK SUPPORTING THE ENGINE MUST BE REINFORCED TO CARRY ALL LOADS AND MOMENTS SHOWN IN LOAD DIAGRAM AND IN OTHER VIEWS. THESE LOADS ARE BASED ON 100% EFFECTIVENESS OF THE MAXIMUM BREAKING STRENGTH OF THE CABLE UNDER THE MOST SEVERE EMERGENCY DYNAMIC CONDITIONS. ALL LOADS CAN OCCUR IN OPPOSITE DIRECTIONS AND/OR ON OPPOSITE SIDES FROM THE ONES SHOWN. FOR DECK BOLT PATTERN SEE PLAN VIEW SHOWN ON THIS DRAWING.
6. AFTER INSTALLATION OF ARRESTING ENGINE AND REEVING CABLE, TEST HYDROSTATICALLY IN ACCORDANCE WITH SHIPBOARD TEST PROCEDURES REPORT NAEL-ENG-7085.
7. THE INSTALLING AGENCY SHALL FURNISH AND INSTALL UNDER ITS OWN COGNIZANCE THE FOLLOWING ITEMS:
   (a) A 3000 PSI AIR SUPPLY LINE WITH A STRAINER FOR CHARGING THE ACCUMULATOR AND AUXILIARY AIR FLASKS.
   (b) A 440 VOLT, 60 CYCLE, 3 PHASE POWER SUPPLY LINE FOR THE OPERATION OF THE CONTROL UNIT MOTOR WITH A MAXIMUM RATED CAPACITY OF ONE (1) HORSEPOWER.
   (C) A 110 VOLT, 60 CYCLE, SINGLE PHASE POWER SUPPLY LINE FOR THE OPERATION OF THE WEIGHT SELECTION REMOTE INDICATORS. VOLTAGE MUST BE NON-FLUCTUATING.
   (d) ALL NECESSARY 7/8 DIA BOLTS (MATERIAL SPEC MIL-S-6758 OR MIL-S-5000 LENGTHS TO SUIT) TO FASTEN THE ENGINE TO THE DECK.
   (e) ALL NECESSARY LIGHTS TO GIVE A MINIMUM INTENSITY OF 30 FOOT CANDLE POWER IN THE VICINITY OF THE CONTROL PANEL AND THE ACCUMULATOR PISTON POSITION INDICATOR.
   (f) AUXILIARY FLASKS FOR 25 CUBIC FT OF AIR AT 3000 PSI IN EACH ARRESTING ENGINE COMPARTMENT.
8. SEA WATER OR FRESH WATER FOR ENGINE LIQUID COOLER TO BE SUPPLIED BY SHIP SERVICE. WATER DELIVERY TO BE 100 GPM. MINIMUM WATER PRESSURE 100 PSI. MAXIMUM WATER PRESSURE NOT TO EXCEED 200 PSI.
9. GENERAL DATA:
   (a) CABLE;
   1 3/8 DIA (6x25) FILLER WIRE LANG LAY. BREAKING STRENGTH OF CABLE 171,000 POUND MINIMUM.
   (b) LENGTH OF CABLES REEVED WITHIN STRUCTURE WITH CROSSHEAD AGAINST STOP: ON OUTER SHEAVES-942 FEET, ON INNER SHEAVES-831 FEET.
   (C) WEIGHT OF ENGINE EXCLUSIVE OF LIQUID AND CABLES = 82,813 LB.
10. SUPPLEMENTARY ARRESTING ENGINE DRAWINGS: 610541 BASE-FIXED SHEAVE END, 57-61219 BASE CROSSHEAD END, 50-61937 ENGINE-ARRESTING ASSEMBLY (WITH COOLER), 50-61938 ENGINE-ARRESTING ASSEMBLY (WITHOUT COOLER).
11. (E) BOLTING REQUIREMENTS ARE TO BE IN ACCORDANCE WITH BUSHIPS INSTRUCTION 9110.54.

REVISIONS				
ZONE	SYM	DESCRIPTION	DATE	APPROVED
	D	CL "R" CHG. NRN. (1) REPLACES REV (C) WITHOUT CHG. KIDDER	4/27	
	E	NRN CL R CHG ADDED NOTE 11, LEFT-OUT WHEN REDRAWN FROM REV C. J BARBELLA	7/61	

NEXT ASSEMBLY	QTY REQD	PART NUMBER	DESCRIPTION	STOCK	MATERIAL	SPECIFICATION	SHT QT

LIST OF MATERIALS

UNLESS OTHERWISE SPECIFIED DIMENSIONS ARE IN INCHES
TOLERANCES ON FRACTIONS ± — DECIMALS ± .010 ANGLES ± ½°

THESE DOCUMENTS ALSO ARE A PART OF THIS DRAWING
MPR 1015

MECHANICAL FINISH SURFACE ROUGHNESS IN MICROINCHES
✓ SURFACE ROUGHNESS IN ACCORDANCE WITH ASA B46

DRAWN	KIDDER	4APR67
CHECKED	POOLE	4APR67
MATERIAL		
ANALYZED		
SUPERVISOR	Bates	5APR67
APPROVED		DATE
APPROVED		DATE

DESIGNED FOR MK7 MOD3
REF

NAVAL AIR ENGINEERING LABORATORY (130)
NAVAL AIR ENGINEERING CENTER, PHILA., PA. 19112

TITLE
ENGINE, ARRESTING
MK 7 MOD 3
INSTALLATION DATA

SIZE H | CODE IDENT NO. 00020 | DRAWING NO. 02-61946

SCALE 3/4=1'-0 AND NOTED | SHEET

CLASSIFICATION OF CHARACTERISTICS	
CRITICAL	C TO C
MAJOR	M TO M
MINOR	ALL OTHER CHARACTERISTICS

FIGURE 1

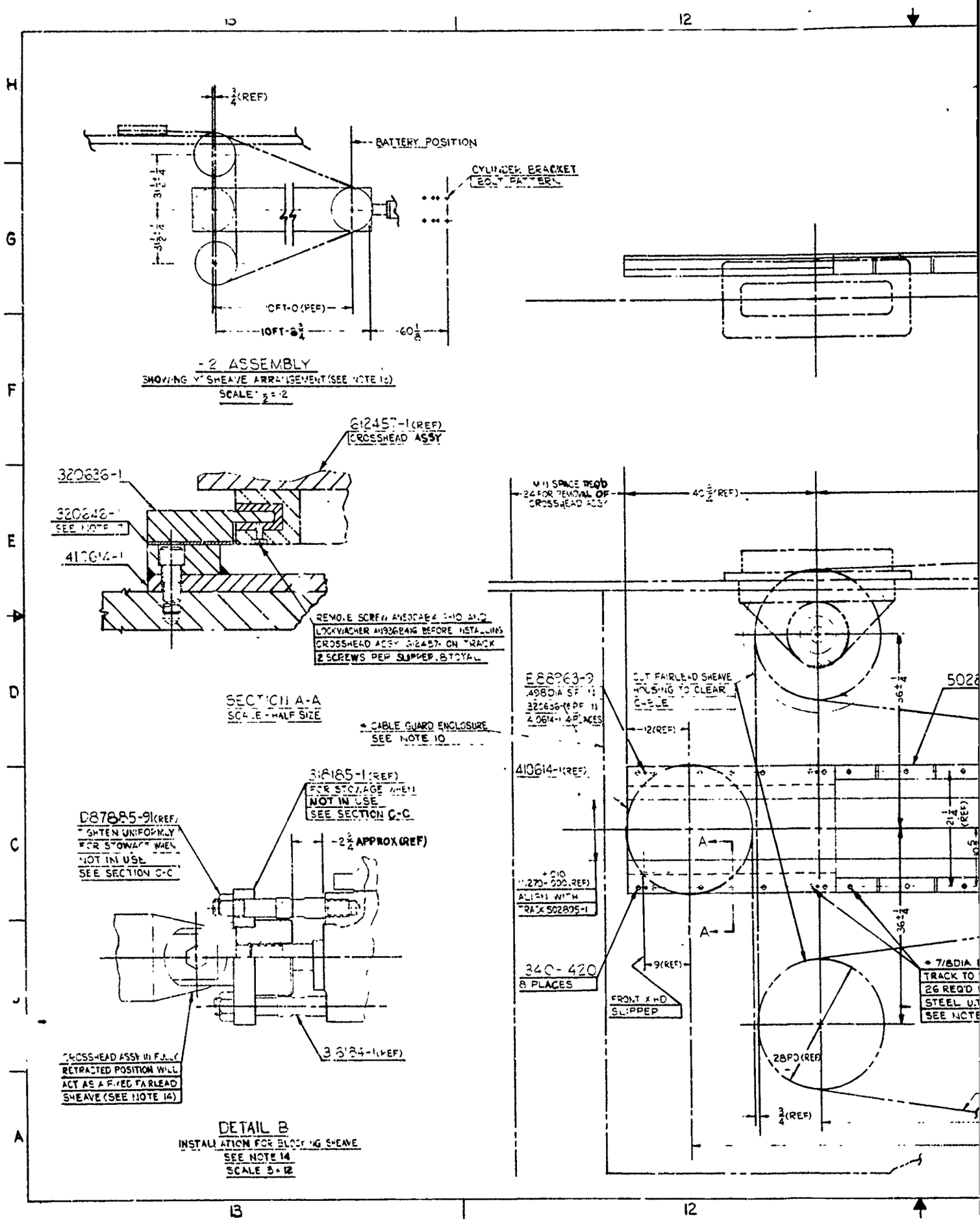

BATTERY POSITION
CYLINDER BRACKET BOLT PATTERN
10FT-0 (REF)
10FT-8 3/4
60 1/8
-2 ASSEMBLY
SHOWING 'Y' SHEAVE ARRANGEMENT (SEE NOTE 13)
SCALE 1/2 = 12
612457-1 (REF) CROSSHEAD ASSY
320636-1
320646-1 SEE NOTE 7
410614-1
REMOVE SCREW AN500AB4-10 AND LOCKWASHER AN936B4-16 BEFORE INSTALLING CROSSHEAD ASSY 612457-1 ON TRACK 2 SCREWS PER SLIPPER, 8 TOTAL
SECTION A-A
SCALE - HALF SIZE
* CABLE GUARD ENCLOSURE SEE NOTE 10
318185-1 (REF) FOR STOWAGE WHEN NOT IN USE SEE SECTION C-C
D87885-91 (REF) TIGHTEN UNIFORMLY FOR STOWAGE WHEN NOT IN USE SEE SECTION C-C
2 3/4 APPROX (REF)
CROSSHEAD ASSY IN FULLY RETRACTED POSITION WILL ACT AS A FIXED FAIRLEAD SHEAVE (SEE NOTE 14)
DETAIL B
INSTALLATION FOR BLOCKING SHEAVE
SEE NOTE 14
SCALE 3 = 12
MIN SPACE REQ'D 24 FOR REMOVAL OF CROSSHEAD ASSY
40 3/4 (REF)
E88963-9
.498 DIA SF IN 320636-1 (REF) IN 410614-1 4 PLACES
CUT FAIRLEAD SHEAVE HOUSING TO CLEAR CABLE
12 (REF)
410614-1 (REF)
ALIGN WITH TRACK 502895-1
340-420
8 PLACES
9 (REF)
FRONT X HD SLIPPER
28PD (REF)
3/4 (REF)
36 ± 1/4
21 1/4 (REF)
* 7/8 DIA TRACK TO 26 REQ'D STEEL U.T. SEE NOTE

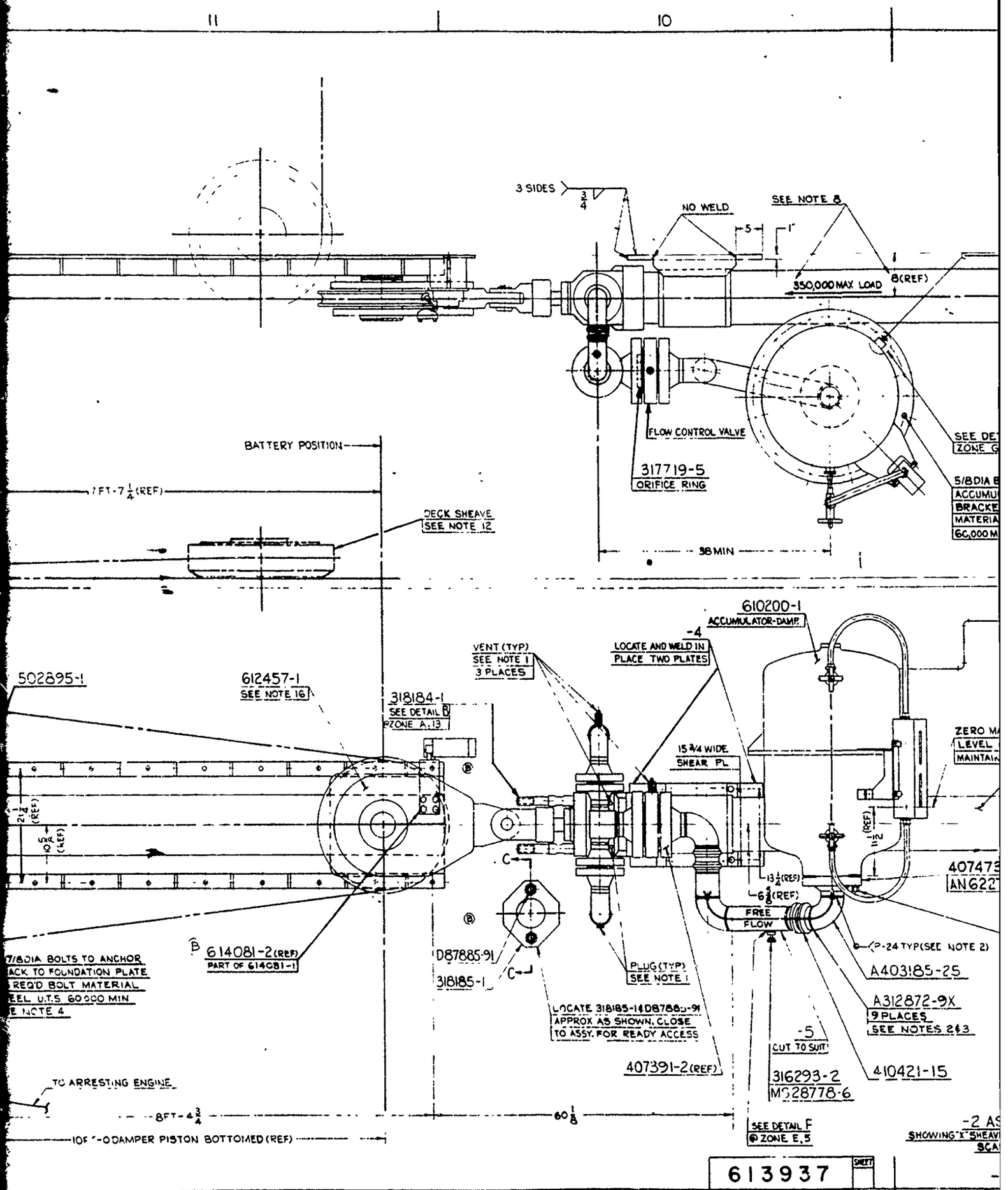
3 SIDES
3/4
NO WELD
SEE NOTE 8
5
1"
350,000 MAX LOAD
8(REF)
FLOW CONTROL VALVE
317719-5
ORIFICE RING
SEE DET
ZONE G
5/8DIA B
ACCUMU
BRACKE
MATERIA
60,000 M
BATTERY POSITION
7FT-7 1/4 (REF)
DECK SHEAVE
SEE NOTE 12
38 MIN
610200-1
ACCUMULATOR-DAMP.
-4
LOCATE AND WELD IN
PLACE TWO PLATES
VENT (TYP)
SEE NOTE 1
3 PLACES
502895-1
612457-1
SEE NOTE 16
318184-1
SEE DETAIL B
ZONE A,13
15 3/4 WIDE
SHEAR PL
ZERO M
LEVEL
MAINTAIN
21 1/4 (REF)
10 5/8 (REF)
11 1/2 (REF)
13 1/4 (REF)
6 3/8 (REF)
FREE
FLOW
407473
AN622
7/8DIA BOLTS TO ANCHOR
ACK. TO FOUNDATION PLATE
REQ'D BOLT MATERIAL
EEL U.T.S 60000 MIN
E NOTE 4
614081-2 (REF)
PART OF 614081-1
D87885-91
318185-1
PLUG (TYP)
SEE NOTE 1
P-24 TYP (SEE NOTE 2)
A403185-25
A312872-9X
9 PLACES
SEE NOTES 2&3
LOCATE 318185-1&D87885-91
APPROX AS SHOWN, CLOSE
TO ASSY. FOR READY ACCESS
-5
CUT TO SUIT
407391-2 (REF)
316293-2
MS28778-6
410421-15
TO ARRESTING ENGINE
8FT-4 3/4
60 1/8
10FT-0 DAMPER PISTON BOTTOMED (REF)
SEE DETAIL F
ZONE E,5
-2 AS
SHOWING "X" SHEAV
SCA
613937
SHEET

2

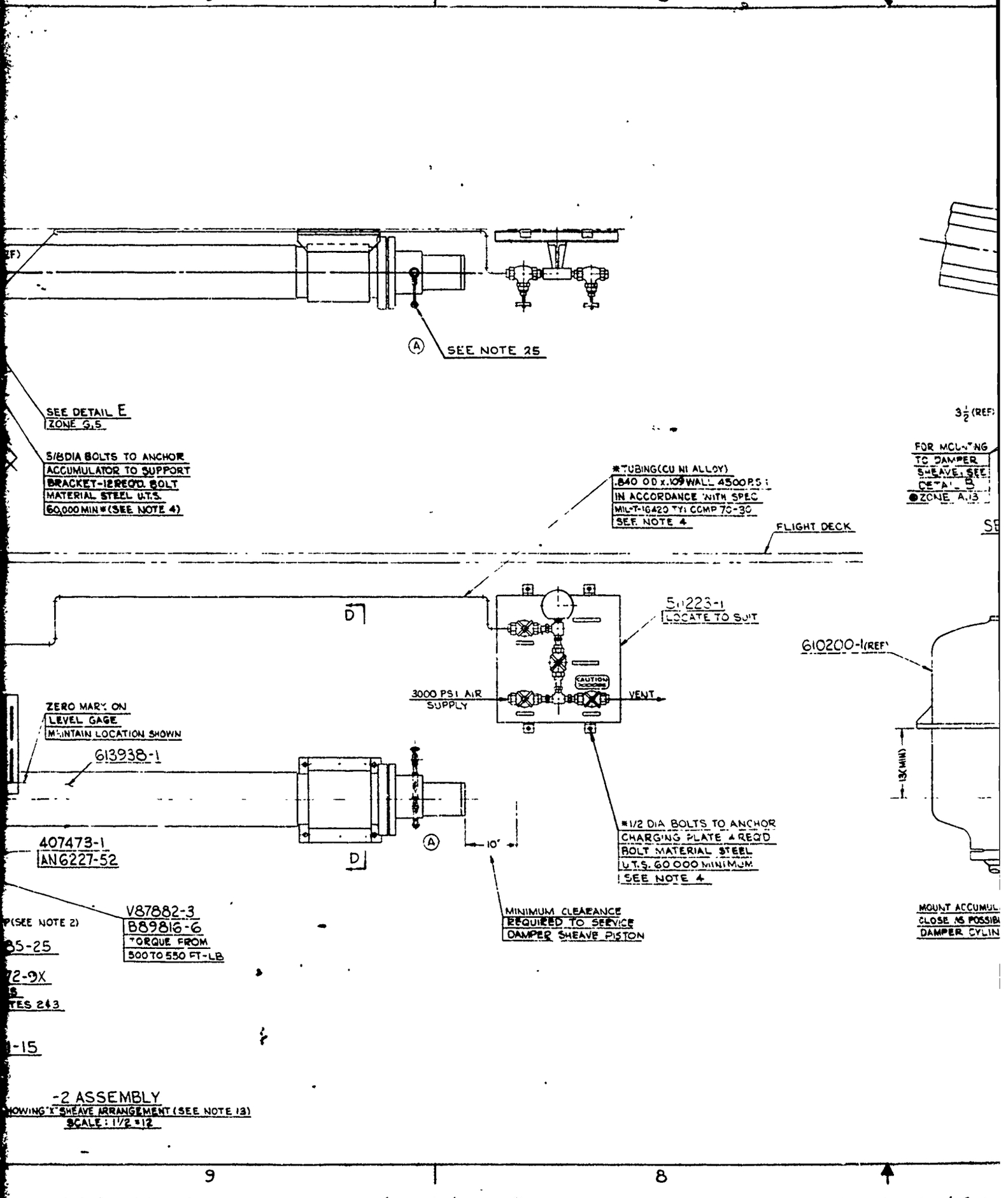
9
8
SEE NOTE 25
SEE DETAIL E
ZONE G,5
5/8 DIA BOLTS TO ANCHOR
ACCUMULATOR TO SUPPORT
BRACKET-12 REQ'D. BOLT
MATERIAL STEEL U.T.S.
60,000 MIN * (SEE NOTE 4)
*TUBING (CU NI ALLOY)
.840 OD x .109 WALL 4500 P.S.I.
IN ACCORDANCE WITH SPEC
MIL-T-16420 TYI COMP 70-30
SEE NOTE 4
FLIGHT DECK
3 1/2 (REF)
FOR MOUNTING
TO DAMPER
SHEAVE: SEE
DETAIL B
ZONE A,13
511223-1
LOCATE TO SUIT
610200-1 (REF)
CAUTION
3000 PSI AIR
SUPPLY
VENT
ZERO MARK ON
LEVEL GAGE
MAINTAIN LOCATION SHOWN
613938-1
13 (MIN)
407473-1
AN6227-52
10"
*1/2 DIA BOLTS TO ANCHOR
CHARGING PLATE 4 REQ'D
BOLT MATERIAL STEEL
U.T.S. 60 000 MINIMUM
SEE NOTE 4
V87882-3
B89816-6
TORQUE FROM
500 TO 550 FT-LB
MINIMUM CLEARANCE
REQUIRED TO SERVICE
DAMPER SHEAVE PISTON
MOUNT ACCUMUL
CLOSE AS POSSIBL
DAMPER CYLIN
P (SEE NOTE 2)
85-25
72-9X
TES 2&3
-15
-2 ASSEMBLY
HOWING "X" SHEAVE ARRANGEMENT (SEE NOTE 13)
SCALE: 1 1/2 = 12
9
8

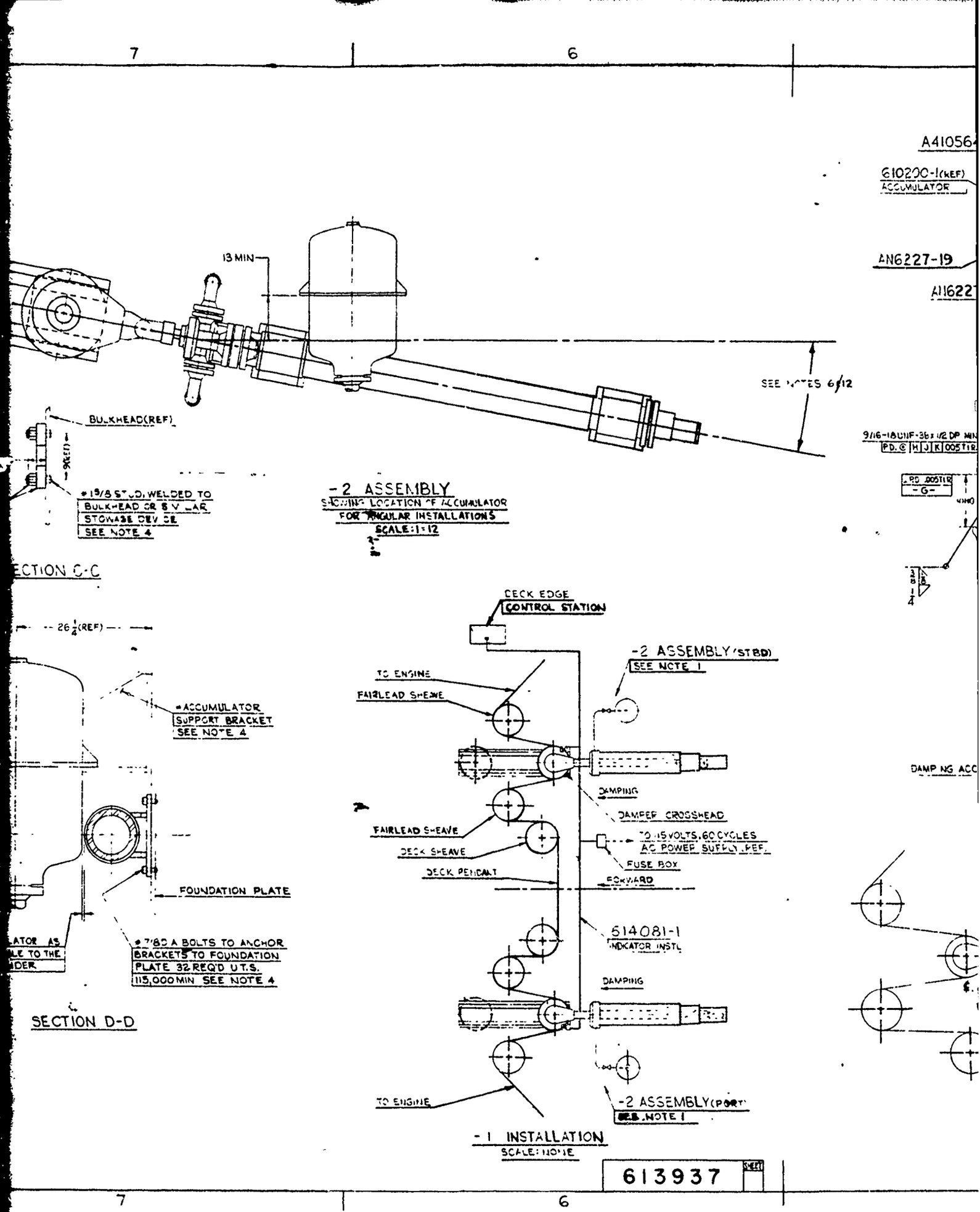

7
6
A41056
610200-1(REF)
ACCUMULATOR
AN6227-19
A11622
13 MIN
SEE NOTES 6 & 12
BULKHEAD(REF)
#1 5/8 STUD, WELDED TO BULKHEAD OR SIMILAR STOWAGE DEVICE SEE NOTE 4
-2 ASSEMBLY
SHOWING LOCATION OF ACCUMULATOR FOR ANGULAR INSTALLATIONS
SCALE: 1:12
ECTION C-C
9/16-18UNF-3B x 1/2 DP MIN
PD. C H J K .005 TIR
-G-
26 1/4 (REF)
#ACCUMULATOR SUPPORT BRACKET SEE NOTE 4
FOUNDATION PLATE
#7/8D A BOLTS TO ANCHOR BRACKETS TO FOUNDATION PLATE 32 REQ'D U.T.S. 115,000 MIN SEE NOTE 4
SECTION D-D
DECK EDGE
CONTROL STATION
-2 ASSEMBLY (STBD)
SEE NOTE 1
TO ENGINE
FAIRLEAD SHEAVE
DAMPING
DAMPER CROSSHEAD
FAIRLEAD SHEAVE
DECK SHEAVE
TO 115 VOLTS, 60 CYCLES AC POWER SUPPLY (REF)
FUSE BOX
DECK PENDANT
FORWARD
614081-1
INDICATOR INSTL
DAMPING
TO ENGINE
-2 ASSEMBLY (PORT)
SEE NOTE 1
-1 INSTALLATION
SCALE: NONE
DAMPING ACC
613937
SHEET
7
6

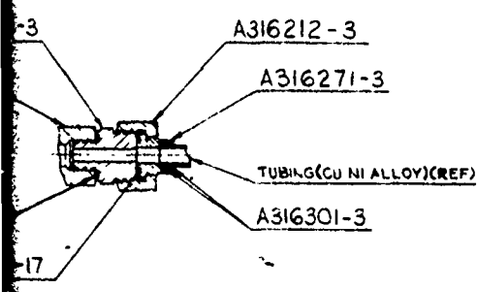

DETAIL E
FITTING ASSEMBLY
SCALE - NONE

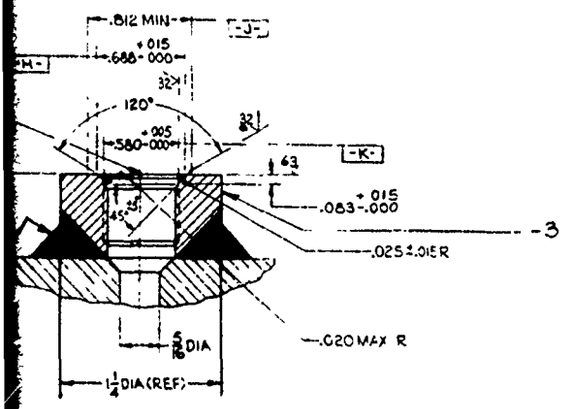

DETAIL F
BOSS & THREAD DATA
SCALE - TWICE SIZE

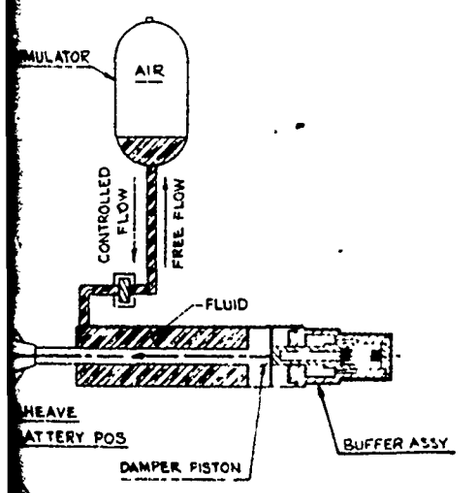

FLOW DIAGRAM
SCALE : NONE

17. ADD OR REMOVE SHIMS 320646-1 AS NECESSARY TO MAINTAIN ALIGNMENT OF SHEAVE TRACK RAILS. (REF 320636-1 & 502895-1)
18. MATERIAL IS NOMINAL SIZE WITHOUT MANUFACTURING ALLOWANCE. FOR NAEL(SI) USE ONLY.
19. MATERIAL FOR PARTS-3 & 4 SHALL BE IN ACCORDANCE WITH QQ-S-741 GR B.
20. MATERIAL FOR PART-5 SHALL BE IN ACCORDANCE WITH WW-P-404 CL SSRS X S.
21. DIMENSIONING AND TOLERANCING IS IN ACCORDANCE WITH MIL-STD-8.
22. ALL PIPE RUNS SHALL BE SUPPORTED EVERY 6FT (APPROX) TO REDUCE PIPING VIBRATION.
23. INSTALLING ACTIVITY SHALL FURNISH THE FOLLOWING:
    (a) JACK BOXES FOR PHONE CONNECTIONS SHALL BE INSTALLED IN SHEAVE DAMPER AREA.
    (b) INSTALL GAUGE LIGHTS FOR ACCUMULATOR FLUID LEVEL GAUGES.
    (c) INSTALL SUITABLE LIGHT AT CONTROL PANEL 511223-1.
    (d) FLUID STOWAGE SYSTEM SHALL BE DESIGNED IN ACCORDANCE WITH NAEL(SI) DWG 511168.
24. NUMBER OF SCALE FREE COUPLINGS (410421-15) & WELDING RING (312872-9X) PROVIDED FOR -2 ASSEMBLY INCLUDES AN ADDITIONAL 100% FOR INSTALLATION SPARES.
(A) 25. BUFFER PIPING ARRANGEMENT MUST BE INSTALLED OPPOS BULKHEAD AS SHOWN. IT MAY BE REQUIRED TO DISASSEM THE EXISTING BUFFER PIPING ON THE SHEAVE DAMPER ASSEMBLY TO CONFORM TO ARRANGEMENT SHOWN.

RY TO MAINTAIN
SG-1 (502595-1)
TURING ALLOWANCE.

ORDANCE WITH

H WW-P-404 CL 5589 XS.
WITH MIL-STD-8.
FT (APPROX) TO

WING:
HALL BE INSTALLED

FLUID LEVEL GAUGES.
511223-1.
ED IN ACCORDANCE

) & WELDING
INCLUDES AN

NSTALLED OPPOSITE
RED TO DISASSEMBLE
AVE DAMPER
T SHOWN.

NOTES:

1. THIS DRAWING SHOWS A TYPICAL SHIPBOARD INSTALLATION FOR THE MK7 MOD 3 DAMPER SHEAVES, PART NO. 613937-1. ALL DETAIL COMPONENTS ARE ALIKE FOR PORT AND STARBOARD DAMPERS. FOR ASSEMBLY OPPOSITE TO THAT SHOWN, VENT VALVES AND DRAIN PLUGS SHALL BE ROTATED 180° SO THAT VENT VALVES ARE ON TOP AND DRAIN PLUGS ARE ON BOTTOM. FLOW CONTROL VALVES SHOULD BE ROTATED, IF NECESSARY SO THAT VENT VALVES ARE ON TOP.

M101 2. WELDING PROCEDURE SHALL BE IN ACCORDANCE WITH MIL-STD-278; CLASS M MACHINERY, P-1 OR P-3 PIPING. FOR P-1 PIPING WELDING RING A312872-9X SHALL BE MACHINED OUT.

M102 3. CYLINDERS, PIPE LINES, AND ACCUMULATORS SHALL BE THOROUGHLY CLEANED AS NECESSARY BEFORE AND AFTER ASSEMBLY TO INSURE REMOVAL OF ALL METALLIC WASTE AND FOREIGN MATTER PRIOR TO FILLING WITH FLUID, IN ACCORDANCE WITH ARRESTING GEAR SERVICE BULLETIN 168.

4. ALL BOLTS, NUTS, SUPPORT BRACKETS, TUBING, ETC. MARKED THUS * SHALL BE SUPPLIED BY THE INSTALLING ACTIVITY.

M103 5. ALL COMPONENTS ARE TO BE PROPERLY ALIGNED TO INSURE SMOOTH FUNCTIONING WITHOUT BINDING OR CHATTERING.

6. CYLINDER ASSEMBLY & TRACK MAY BE INSTALLED ON A SLOPING ANGLE (UP TO 10°) WITH BUFFING END OF CYLINDER ON THE LOW END OF THE SLOPE. LOCATION OF ACCUMULATOR MAY BE VARIED, BUT IN ALL INSTALLATIONS IT MUST BE IN A VERTICAL POSITION. ANY VARIATION OF THE INSTALLATIONS AS SHOWN MUST BE APPROVED BY THE NAEL(SI) ENGINEERING DEPARTMENT.

7. PAINT ALL EXPOSED NON-WORKING & NON-FAYING SURFACES IN ACCORDANCE WITH MPR 1201-12.

8. FOUNDATION STRUCTURE FOR CYLINDER ASSEMBLY 613938-1 MUST WITHSTAND LOAD SHOWN IN PLAN VIEW.

M104 9. BOTH 613937-2 ASSEMBLIES SHALL WITHSTAND WITHOUT LEAKAGE OR PERMANENT DEFORMATION THE FOLLOWING HYDROSTATIC TEST: (EQUIPMENT REQUIRED FOR TEST SHALL BE PROVIDED BY MANUFACTURER) WITH PURCHASE CABLE REEVED AND CROSSHEAD ASSY 612457-1 LOCATED IN BATTERY POSITION. FILL DAMPER ACCUMULATOR WITH FLUID. CONDUCT STANDARD TEST PROCEDURE USED TO PROOF LOAD ARRESTING GEAR DRIVE SYSTEM. CAUTION: PRESSURE IN DAMPER ACCUMULATOR 610200-1 MUST NOT EXCEED 5000 PSI. DURING TEST. FILL BUFFER WITH OIL 91782-5 TO ℄ OF LIQUID SIGHT IND.

10. CABLE GUARD ENCLOSURE SHALL BE DESIGNED AND SUPPLIED BY THE INSTALLING ACTIVITY IN ACCORDANCE WITH NAEL(SI) DWG 612991.

11. FOR ACTUAL INSTALLATIONS ON DIFFERENT VESSELS SEE APPLICABLE BUREAU SHIP DRAWING.

12. ANGULAR DAMPER SHEAVE INSTALLATION MAY BE NECESSARY WHEN "X" TYPE SHEAVE ARRANGEMENT IS USED ON VESSELS OUTFITTED WITH RETRACTABLE DECK SHEAVES.

13. "X" AND "Y" ARRANGEMENTS CAN BE USED INTERCHANGEABLY.

14. TO BLOCK DAMPER SHEAVE ASSEMBLY IN A FIXED POSITION INSTALL MATERIAL AS SHOWN IN DETAIL "B" TO BLOCK DAMPER CROSSHEAD IN THE FULLY RETRACTED POSITION; CHARGE AND FILL DAMPER ACCUMULATOR TO NORMAL OPERATING PRESSURE & LEVEL.

15. THREAD DIMENSIONS & DESIGNATIONS SHALL BE INTERPRETED IN ACCORDANCE WITH HANDBOOK H-28 AND MIL-STD-9, RESPECTIVELY

M105 16. BEFORE FLUID IS INTRODUCED INTO SYSTEM, CROSSHEAD ASSY 612457-1 ATTACHED TO CYLINDER ASSY 613938-1, SHALL MOVE WITHOUT BINDING OR CHATTERING UNDER A FORCE OF APPROX 200 LB.

NEXT ASSEMBLY	QTY REQD	PART NUMBER	DESCRIPTION
613937-2	1	AN6227-52	PACKING 'O' RING
-2	1	AN6227-19	PACKING 'O' RING
-2	1	AN6227-17	PACKING 'O' RING
-2	1	MS28778-6	GASKET 'O' RING
-2	9	91782-5	ETHYLENE GLYCOL
-2	8	889816-6	WASHER, FLAT
-2	4	E889963-9	PIN
-2	2	D678859-9	NUT, HEX
-2	8	V678602-3	BOLT
-2	1	612457-1	CROSSHEAD ASSY
-2	1	610200-1	ACCUM ASSY
-2	1	613938-1	CYLINDER ASSY
-2	1	511223-1	PANEL, CHARGING ASSY
-1	1	614081-1	INDICATOR INSTL
-2	1	502895-1	TRACK - SHEAVE
2	1	410616-1	TRACK-SHEAVE
-2	1	A410864-3	ADAPTER
-2	4	410421-18	COUPLING
-2	1	407473-1	FLANGE
-2	3	A405185-25	90° ELBOW, SHORT RAD
-2	2	820846-1	SHIM
-2	2	820686-1	RAIL
-2	1	818188-1	PLATE
-2	2	818184-1	STUD
-2	1	317719-5	ORIFICE RING
-2	1	A316301-3	RING SIL-BRAZE
-2	1	316298-2	VALVE, BLEED ASSY
-2	1	A316271-3	TAILPIECE
-2	1	A316212-3	UNION NUT
-2	18	A312872-9X	WELDING RING
-2	8	1340-1420	SCREW
-2	10 FT	613937-5	PIPE (CUT TO SUIT)
-2	2	-4	SHEAR PLATE
-2	1	-3	BOSS
613937-1	2	-2	ASSEMBLY
		613937-1	DAMPER SHEAVE INSTL

LIST OF MA

REV	ZONE	DESCRIPTION
	A	CL "R" RELO BUFF ADDE
	B	NRN, C BATTE (614 CNOS "NOM P

UNLESS OTHERWISE SPECIFIED DIMENSIONS ARE IN INCHES
TOLERANCES ON:
FRACTIONS ± | DECIMALS ± .010 | ANGLES ± ½°

THESE DOCUMENTS ALSO ARE A PART OF THIS DRAWING

MPR 1201-12
MPR 1400

MECHANICAL FINISH SURFACE ROUGHNESS IN MICROINCHES

√ = THIS SYMBOL EMBRACING THE SURFACE ROUGHNESS OR MICRO-INCHES REPRESENTS THE MAXIMUM ACCEPTABLE ROUGHNESS, AND MAY BE PRODUCED BY ANY MECHANICAL PROCESS.
REF SPEC MIL-STD-10

DESIGNED FOR MK7 MOD 3
REF

DRAWN	D. SCHRIER	10-2-66
CHECKED	P. FRANKS	1-2-67
MATERIAL		
ANALYZED		
SUPERVISOR	R. KNIGHT	1-3-67
APPROVED		1/6/67
APPROVED		DATE

CLASSIFICATION OF CHARACTERISTICS
CRITICAL - C TO C
MAJOR - M101 TO M108
MINOR - ALL OTHER CHARACTERISTICS

613937

SHEET

3 2 1

SYM	DESCRIPTION	DATE	APPROVED
A	CL "R" REV. NRN. ON DWG.; RELOCATED PIPING ON BUFFER ASSY. IN NOTE 15. ADDED NOTE 25. MASON	7/6/66	7K
B	NRN, CL "R" CHG: ON DWG: RELOCATED BATTERY POSITION LIMIT SWITCH (614081-2) FROM BELOW TO ABOVE CROSSHEAD. IN TITLE BLOCK: ADDED "NON PRESSURIZED BUFFER." CED	7/6/67	7K

WS A TYPICAL SHIPBOARD INSTALLATION FOR THE
R SHEAVES, PART NO. 613937-1. ALL DETAIL
ALIKE FOR PORT AND STARBOARD DAMPERS.
PPOSITE TO THAT SHOWN, VENT VALVES AND
LL BE ROTATED 180° SO THAT VENT VALVES
DRAIN PLUGS ARE ON BOTTOM. FLOW CONTROL
E ROTATED, IF NECESSARY SO THAT VENT VALVES

URE SHALL BE IN ACCORDANCE WITH MIL-STD-278;
RY, P-1 OR P-3 PIPING. FOR P-1 PIPING WELDING
SHALL BE MACHINED OUT.
NES, AND ACCUMULATORS SHALL BE THOROUGHLY
SSARY BEFORE AND AFTER ASSEMBLY TO
OF ALL METALLIC WASTE AND FOREIGN
FILLING WITH FLUID, IN ACCORDANCE WITH
SERVICE BULLETIN 168.
SUPPORT BRACKETS, TUBING, ETC. MARKED
UPPLIED BY THE INSTALLING ACTIVITY.
ARE TO BE PROPERLY ALIGNED TO INSURE SMOOTH
OUT BINDING OR CHATTERING.
LY & TRACK MAY BE INSTALLED ON A SLOPING
WITH BUFFING END OF CYLINDER ON THE LOW
LOCATION OF ACCUMULATOR MAY BE VARIED,
LLATIONS IT MUST BE IN A VERTICAL
RIATION OF THE INSTALLATIONS AS SHOWN MUST
THE NAEL(SI) ENGINEERING DEPARTMENT.
ED NON-WORKING & NON-FAYING SURFACES
TH MPR 1201-12
CTURE FOR CYLINDER ASSEMBLY 613938-1 MUST
SHOWN IN PLAN VIEW.
MBLIES SHALL WITHSTAND WITHOUT LEAKAGE OR
MATION THE FOLLOWING HYDROSTATIC TEST
FOR TEST SHALL BE PROVIDED BY MANUFACTURER)
ABLE REEVED AND CROSSHEAD ASSY 612457-1
RY POSITION. FILL DAMPER ACCUMULATOR
UCT STANDARD TEST PROCEDURE USED TO PROOF
GEAR DRIVE SYSTEM. CAUTION: PRESSURE IN
TOR 610200-1 MUST NOT EXCEED 5000 PSI.
BUFFER WITH OIL 91782-5 TO ℄ OF LIQUID SIGHT IND.
OSURE SHALL BE DESIGNED AND SUPPLIED BY
VITY IN ACCORDANCE WITH NAEL(SI) DWG 612991.
LATIONS ON DIFFERENT VESSELS SEE APPLICABLE
WING.
SHEAVE INSTALLATION MAY BE NECESSARY
AVE ARRANGEMENT IS USED ON VESSELS
RETRACTABLE DECK SHEAVES.
EMENTS CAN BE USED INTERCHANGEABLY.
R SHEAVE ASSEMBLY IN A FIXED POSITION
L AS SHOWN IN DETAIL "B" TO BLOCK DAMPER
FULLY RETRACTED POSITION; CHARGE AND FILL
ATOR TO NORMAL OPERATING PRESSURE &

ONS & DESIGNATIONS SHALL BE INTERPRETED
WITH HANDBOOK H-28 AND MIL-STD-9, RESPECTIVELY
RODUCED INTO SYSTEM, CROSSHEAD ASS'Y
D TO CYLINDER ASSY 613938-1, SHALL MOVE WITHOUT
ERING UNDER A FORCE OF APPROX 200 LB.

NEXT ASSEMBLY	QTY REQD	PART NUMBER	DESCRIPTION	STOCK	MATERIAL	SPECIFICATION	UNIT WT	
613937-2	1	AN6227-52	PACKING 'O' RING					
-2	1	AN6227-19	PACKING 'O' RING					
-2	1	AN6227-17	PACKING 'O' RING				.2	
-2	1	MS28778-6	GASKET 'O' RING					
-2	9	91782-5	ETHYLENE GLYCOL	(SEE NOTE 16)			40	
-2	8	B89816-6	WASHER, FLAT					
-2	4	E88963-9	PIN				1	
-2	2	D878859-1	NUT, HEX					
-2	8	V878862-3	BOLT				1.6	
-2	1	612457-1	CROSSHEAD ASSY					
-2	1	610200-1	ACCUM ASSY					
-2	1	613938-1	CYLINDER ASSY				97	
-2	1	511223-1	PANEL, CHARGING ASSY				90	
-1	1	614081-1	INDICATOR INSTL					
-2	1	502895-1	TRACK - SHEAVE					
2	1	410614-1	TRACK-SHEAVE				314	
-2	1	A410564-3	ADAPTER					
-2	4	410421-15	COUPLING	(SEE NOTE 24)				
-2	1	407473-1	FLANGE					
-2	3	A403185-25	90° ELBOW, SHORT RAD				2.5	
-2	2	320646-1	SHIM				7.0	
-2	2	320686-1	RAIL					
-2	1	318185-1	PLATE				91	
-2	2	318184-1	STUD				8.3	
2	1	317719-5	ORIFICE RING					
-2	1	A316301-3	RING SIL-BRAZE				.1	
-2	1	316298-2	VALVE, BLEED ASSY					
-2	1	A316271-3	TAILPIECE					
-2	1	A316212-3	UNION NUT					
-2	18	A312872-9X	WELDING RING	(SEE NOTE 24)				
-2	8	1340-1420	SCREW					
-2	10 FT	613937-3	PIPE (CUT TO SUIT)	4" x STRONG	STEEL	(SEE NOTE 20)	100	
-2	2	-4	SHEAR PLATE	1/2 x 15 x 16 LG	STEEL	(SEE NOTE 19)	22	
-2	1	-3	BOSS	1 1/4 MAX x 16 LG	STEEL	(SEE NOTE 19)	2	
613937-1	2	-2	ASSEMBLY	(SEE NOTE 1)				
		613937-1	DAMPER SHEAVE INSTL			(SEE NOTE 4)		

LIST OF MATERIALS

UNLESS OTHERWISE SPECIFIED DIMENSIONS ARE IN INCHES
TOLERANCES ON
FRACTIONS ± DECIMALS ± .010 ANGLES ± 1/2°

THESE DOCUMENTS ALSO ARE A PART OF THE DRAWING
MPR 1201-12
MPR 1400

MECHANICAL FINISH SURFACE ROUGHNESS IN MICROINCHES

√ THIS SYMBOL EMBRACING THE SURFACE ROUGHNESS IN MICRO-INCHES REPRESENTS THE MAXIMUM ACCEPTABLE ROUGHNESS, AND MAY BE PRODUCED BY ANY MECHANICAL PROCESS.
REF SPEC MIL-STD 10

DESIGNED FOR MK 7 MOD 3
REF

DRAWN	D. SCHRIER	12-2-66
CHECKED	P. FRANKS	1-2-67
MATERIAL		
ANALYZED		
SUPERVISOR	R. KNIGHT	1-5-67
APPROVED		1/6/67
APPROVED		DATE

ENGINEERING DEPARTMENT 100
NAVAL AIR ENGINEERING CENTER, PHILA., PA. 19112

TITLE
DAMPER, SHEAVE
SHIPBOARD TYPICAL INSTALLATION
NON-PRESSURIZED BUFFER

SIZE H | CODE IDENT NO 00020 | DRAWING NO. 613937

SCALE 1/2 = 1/2 | SHEET

CLASSIFICATION OF CHARACTERISTICS
CRITICAL - C TO C
MAJOR - M101 TO M108
MINOR - ALL OTHER CHARACTERISTICS

613937 | SHEET

613937

ND

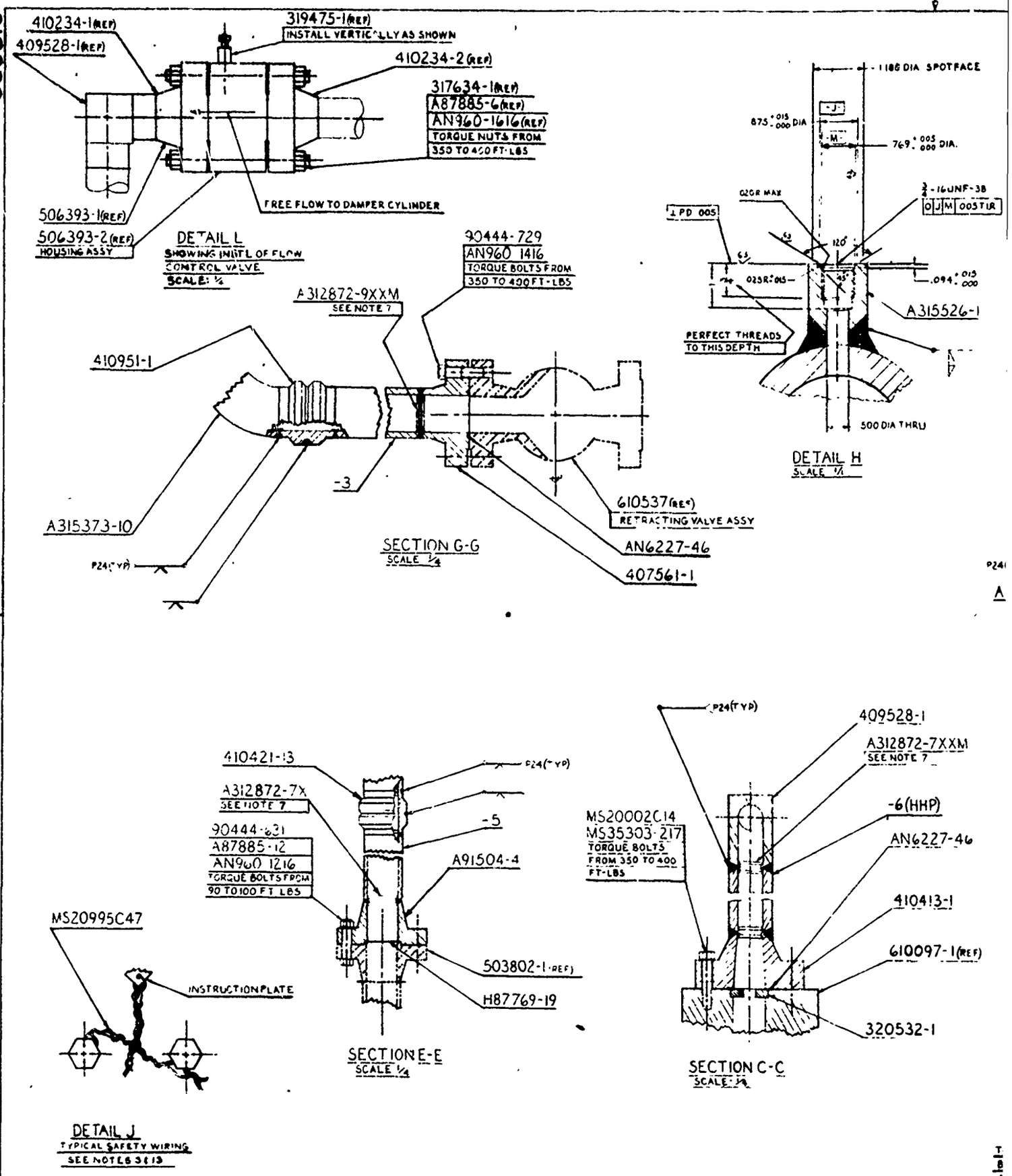

410234-1(REF)
409528-1(REF)
319475-1(REF)
INSTALL VERTICALLY AS SHOWN
410234-2(REF)
317634-1(REF)
A87885-6(REF)
AN960-1616(REF)
TORQUE NUTS FROM
350 TO 400 FT-LBS
FREE FLOW TO DAMPER CYLINDER
506393-1(REF)
506393-2(REF)
HOUSING ASSY
DETAIL L
SHOWING INSTL OF FLOW
CONTROL VALVE
SCALE: 1/4
90444-729
AN960 1416
TORQUE BOLTS FROM
350 TO 400 FT-LBS
A312872-9XXM
SEE NOTE 7
410951-1
-3
A315373-10
P24(TYP)
610537(REF)
RETRACTING VALVE ASSY
AN6227-46
407561-1
SECTION G-G
SCALE 1/4
1.188 DIA SPOTFACE
875 +.015 -.000 DIA
769 +.005 -.000 DIA.
.020R MAX
3/4-16UNF-3B
O J M .005 TIR
PD .005
120°
.025R ±.015
.094 +.015 -.000
A315526-1
PERFECT THREADS
TO THIS DEPTH
.500 DIA THRU
DETAIL H
SCALE 1/1
410421-13
P24(TYP)
A312872-7X
SEE NOTE 7
-5
90444-631
A87885-12
AN960 1216
TORQUE BOLTS FROM
90 TO 100 FT LBS
A91504-4
503802-1(REF)
H87769-19
SECTION E-E
SCALE 1/4
MS20995C47
INSTRUCTION PLATE
DETAIL J
TYPICAL SAFETY WIRING
SEE NOTES 3 & 13
P24(TYP)
409528-1
A312872-7XXM
SEE NOTE 7
-6(HHP)
MS20002C14
MS35303-217
TORQUE BOLTS
FROM 350 TO 400
FT-LBS
AN6227-46
410413-1
610097-1(REF)
320532-1
SECTION C-C
SCALE 1/4

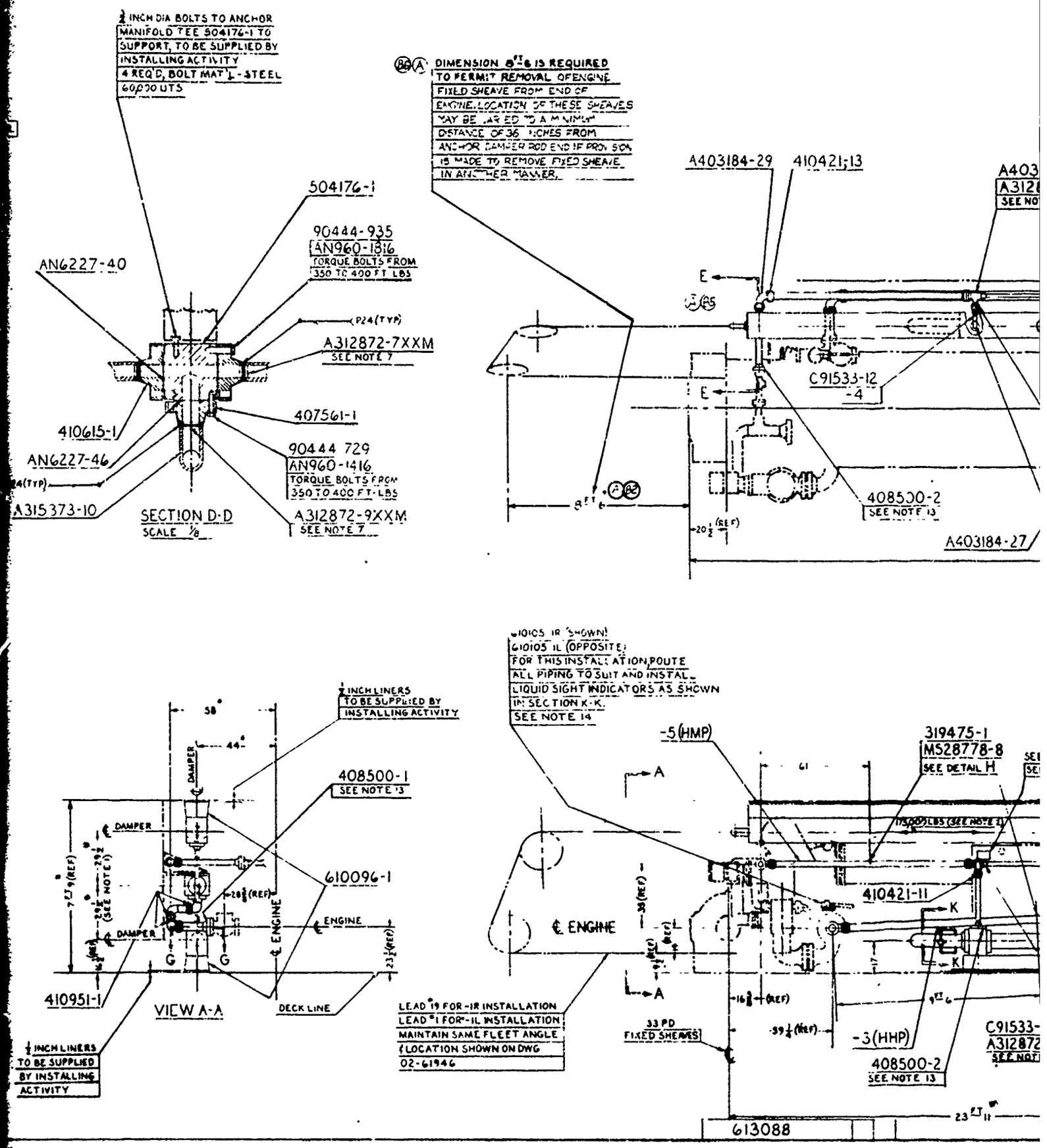
½ INCH DIA BOLTS TO ANCHOR MANIFOLD TEE 504176-1 TO SUPPORT, TO BE SUPPLIED BY INSTALLING ACTIVITY 4 REQ'D, BOLT MAT'L - STEEL 60000 UTS
504176-1
90444-935
AN960-1816
TORQUE BOLTS FROM 350 TO 400 FT LBS
AN6227-40
P24 (TYP)
A312872-7XXM
SEE NOTE 7
407561-1
410615-1
AN6227-46
90444 729
AN960-1416
TORQUE BOLTS FROM 350 TO 400 FT-LBS
A315373-10
SECTION D-D
SCALE 1/8
A312872-9XXM
SEE NOTE 7
DIMENSION 8FT-6 IS REQUIRED TO PERMIT REMOVAL OF ENGINE FIXED SHEAVE FROM END OF ENGINE. LOCATION OF THESE SHEAVES MAY BE ALTERED TO A MINIMUM DISTANCE OF 36 INCHES FROM ANCHOR DAMPER ROD END IF PROVISION IS MADE TO REMOVE FIXED SHEAVE IN ANOTHER MANNER.
A403184-29
410421-13
A403
A312
SEE NO
C91533-12
-4
408500-2
SEE NOTE 13
8FT-6
20½ (REF)
A403184-27
½ INCH LINERS TO BE SUPPLIED BY INSTALLING ACTIVITY
408500-1
SEE NOTE 13
610096-1
DAMPER
ENGINE
410951-1
VIEW A-A
DECK LINE
½ INCH LINERS TO BE SUPPLIED BY INSTALLING ACTIVITY
610105 IR (SHOWN)
610105 IL (OPPOSITE)
FOR THIS INSTALLATION, ROUTE ALL PIPING TO SUIT AND INSTALL LIQUID SIGHT INDICATORS AS SHOWN IN SECTION K-K.
SEE NOTE 14
-5 (HMP)
319475-1
MS28778-8
SEE DETAIL H
410421-11
ENGINE
LEAD 19 FOR -1R INSTALLATION
LEAD 1 FOR -1L INSTALLATION
MAINTAIN SAME FLEET ANGLE
LOCATION SHOWN ON DWG 02-61946
33 PD FIXED SHEAVES
-3 (HMP)
408500-2
SEE NOTE 13
C91533-
A312872
SEE NOT
23FT-11
613088

2

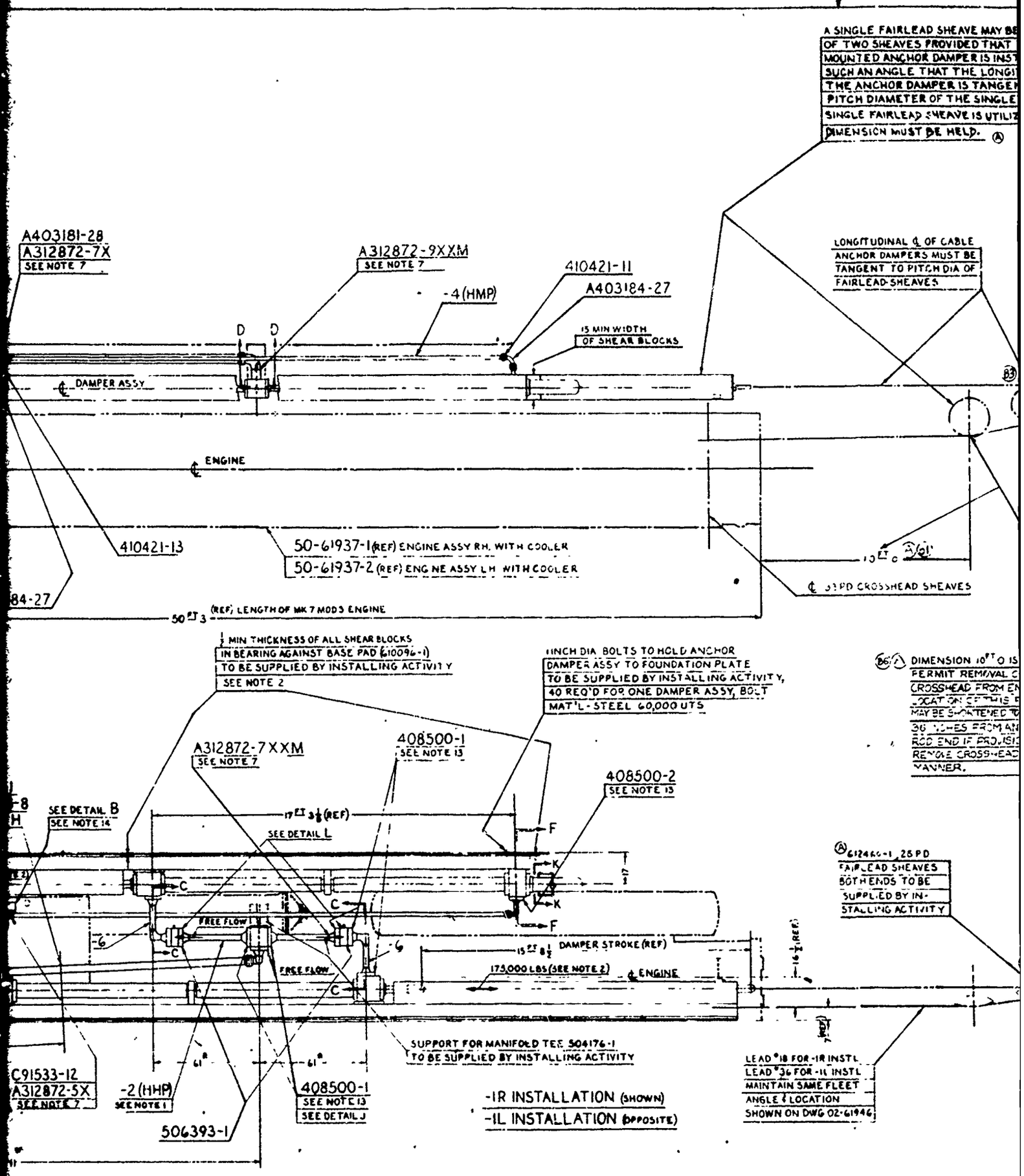
A SINGLE FAIRLEAD SHEAVE MAY BE
OF TWO SHEAVES PROVIDED THAT
MOUNTED ANCHOR DAMPER IS INST
SUCH AN ANGLE THAT THE LONGI
THE ANCHOR DAMPER IS TANGEN
PITCH DIAMETER OF THE SINGLE
SINGLE FAIRLEAD SHEAVE IS UTILIZ
DIMENSION MUST BE HELD.
A403181-28
A312872-7X
SEE NOTE 7
A312872-9XXM
SEE NOTE 7
410421-11
A403184-27
-4 (HMP)
15 MIN WIDTH OF SHEAR BLOCKS
LONGITUDINAL ℄ OF CABLE ANCHOR DAMPERS MUST BE TANGENT TO PITCH DIA OF FAIRLEAD SHEAVES
DAMPER ASSY
ENGINE
410421-13
50-61937-1 (REF) ENGINE ASSY RH, WITH COOLER
50-61937-2 (REF) ENGINE ASSY LH WITH COOLER
℄ 93 PD CROSSHEAD SHEAVES
50 FT 3 (REF) LENGTH OF MK 7 MOD 3 ENGINE
1/2 MIN THICKNESS OF ALL SHEAR BLOCKS IN BEARING AGAINST BASE PAD (610096-1) TO BE SUPPLIED BY INSTALLING ACTIVITY SEE NOTE 2
1 INCH DIA BOLTS TO HOLD ANCHOR DAMPER ASSY TO FOUNDATION PLATE TO BE SUPPLIED BY INSTALLING ACTIVITY, 40 REQ'D FOR ONE DAMPER ASSY, BOLT MAT'L - STEEL 60,000 UTS
DIMENSION 10 FT 0 IS PERMIT REMOVAL C CROSSHEAD FROM EN LOCATION SETTHIS MAY BE SHORTENED TO 36 INCHES FROM AN ROD END IF PROVISI REMOVE CROSSHEAD MANNER.
A312872-7XXM
SEE NOTE 7
408500-1
SEE NOTE 13
408500-2
SEE NOTE 13
SEE DETAIL B
SEE NOTE 14
17 FT 3 1/8 (REF)
SEE DETAIL L
FREE FLOW
DAMPER STROKE (REF)
175,000 LBS (SEE NOTE 2)
℄ ENGINE
612460-1, 28 PD FAIRLEAD SHEAVES BOTH ENDS TO BE SUPPLIED BY INSTALLING ACTIVITY
SUPPORT FOR MANIFOLD TEE 504176-1 TO BE SUPPLIED BY INSTALLING ACTIVITY
C91533-12
A312872-5X
SEE NOTE 7
-2 (HMP)
SEE NOTE 1
408500-1
SEE NOTE 13
SEE DETAIL J
506393-1
LEAD #18 FOR -1R INSTL
LEAD #36 FOR -1L INSTL
MAINTAIN SAME FLEET ANGLE & LOCATION SHOWN ON DWG 02-61946
-1R INSTALLATION (SHOWN)
-1L INSTALLATION (OPPOSITE)

NGLE FAIRLEAD SHEAVE MAY BE USED IN LIEU
TWO SHEAVES PROVIDED THAT THE DECK
NTED ANCHOR DAMPER IS INSTALLED AT
H AN ANGLE THAT THE LONGITUDINAL ℄ OF
ANCHOR DAMPER IS TANGENT TO THE
TCH DIAMETER OF THE SINGLE SHEAVE. IF A
GLE FAIRLEAD SHEAVE IS UTILIZED, THE 20FT-0
ENSION MUST BE HELD. Ⓐ

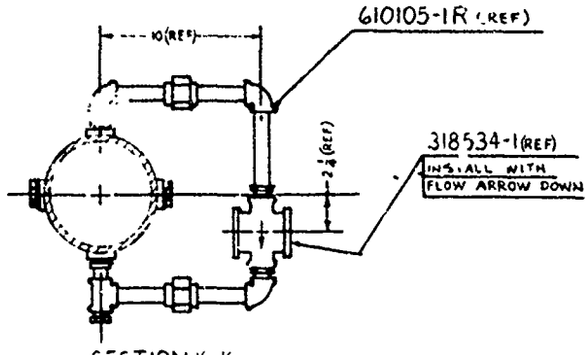

SECTION K-K
SHOWING INSTL OF LIQUID SIGHT INDICATOR 318534-1
2 PLACES
SCALE NONE

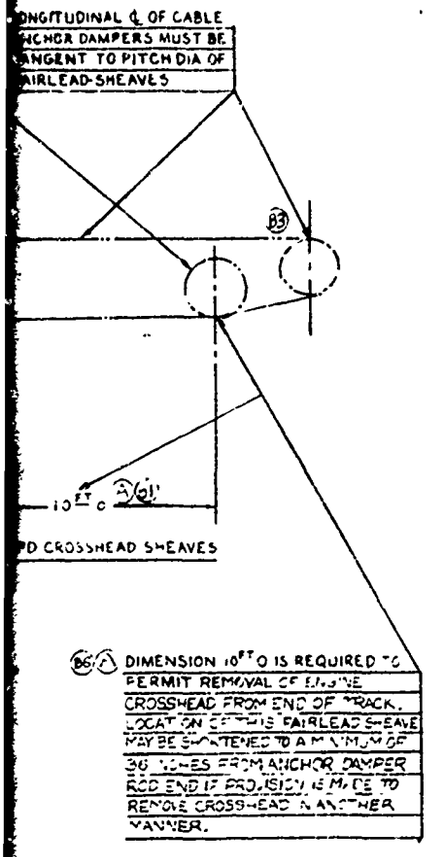

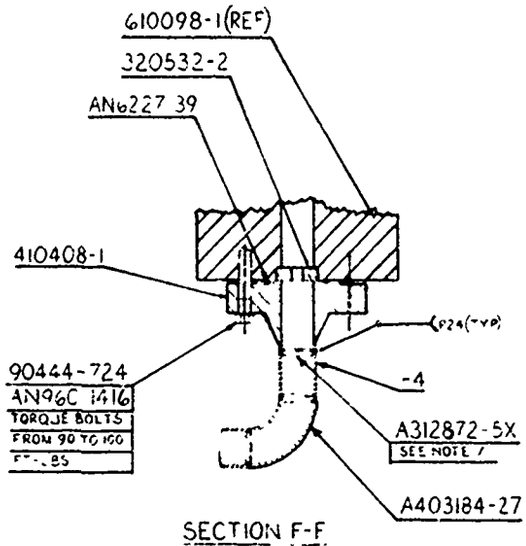

SECTION F-F
SCALE ¼

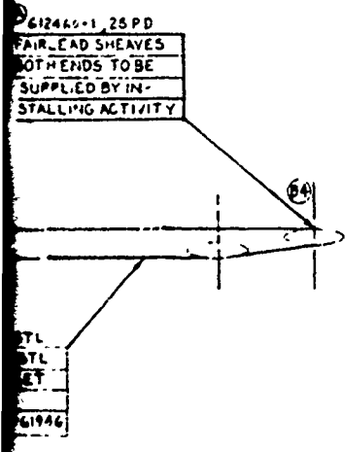

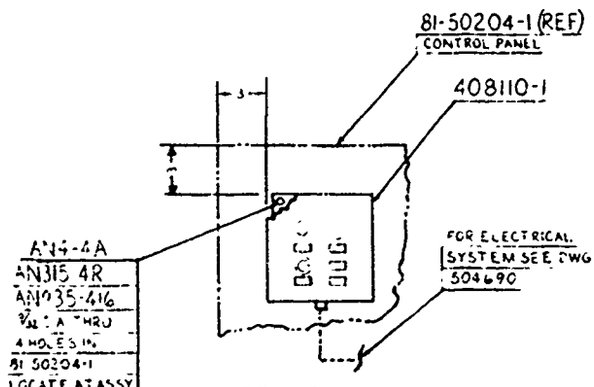

DETAIL B
SCALE ½

NOTES:

1. THIS DWG SHOWS A TYPICAL DECK AND OVERH
FOR THE CABLE ANCHOR DAMPER (610096
ENGINE CYLINDER PRESSURE AS AN OPER
DAMPER ASSEMBLIES MAY VARY FROM TH
MARKED THUS #) BUT ON ALL INSTALLA
MANIFOLD TEE (504176-1) TO DAMPER AS
BE EQUAL LENGTH. ANY VARIATION OF TH
MUSY BE APPROVED BY THE NAVAL AIR ENGI
2. THE MAXIMUM LOAD TRANSFERRED FROM
TO THE SHIPS STRUCTURE THRU THE SH
IN EITHER DIRECTION
3. BOLTS AND NUTS SHALL BE DRILLED FOR
WITH DWG NO 320662
4. ALL PIPE SHALL BE CLEANED, FLUSHED
IN ACCORDANCE WITH MIL-P-7 AG SERVICE E
5. ALL LINES SHALL BE MARKED "HHP" (HYDR
(HYDRAULIC MEDIUM PRESSURE) WITH DI
IDENTIFICATION TO BE PLACED NEAR VA
WHERE POSSIBLE, OTHER LINES WHERE
SHALL BE BLACK IN ACCORDANCE WITH
SIZE SHALL BE 1½ INCH
6. PAINT ALL EXPOSED NON-WORKING AND
WITH MPR 1201-12
7. WELDING PROCESS SHALL BE IN ACCORD
P-1 PIPING EXCEPT
a. WELDING ROD SHALL BE IN ACCORDA
b. 100% RADIOGRAPH INSPECTION FOR
c. PIPING JOINTS (P-4) WELDED IN ACCO
8. DIMENSIONS AND TOLERANCES ARE IN AC
9. INSTALLATION PLAN AND ROUTE IDENTICA
ASSEMBLED OPPOSITE HANDED TO AGRE
10. MATERIAL FOR LINES 3 SHALL BE IN AC
4130 GRADE MP EXCEPT THAT DIMENSI
ACCORDANCE WITH SPEC AWP 404
11. THREAD DIMENSIONS AND DESIGNATIONS
ACCORDANCE WITH HANDBOOK H28 AND N
(C1) 12. PIPING ASSY FOR LINES 3 SHALL BE SUB
HYDROSTATIC TESTS WITH NO LEAKAGE
TION ALL EQUIPMENT NECESSARY FOR
SHALL BE SUPPLIED BY THE INSTALL
a. DISCONNECT MANIFOLD AT BET
END OF THE DAMPERS AND THE AR
VALVE AND SUBJECT THESE MANI
TEST PRESSURE OF 4000 PSI FO
b. DISCONNECT PIPING BETWEEN FL
OPERATING HEADS OF DAMPERS A
TO A HYDROSTATIC TEST PRESSU
PERIOD OF 15 MINUTES FLOW CO
JUST BE INCLUDED IN THIS TE
c. REINSTALL MANIFOLD TESTED
12 SOOPS HYDROSTATICALLY TO C
ANCHOR DAMPERS THE THE SOPL
IN ACCORDANCE WITH THE OPERAT
TO PROOF LOAD THE ARRESTING
d. DISCONNECT MANIFOLD AT BET
PISTON END OF THE CABLE ANCHO
ACCUMULATOR PIPING OF THE E
MANIFOLD TO A HYDROSTATIC TES
FOR A PERIOD OF 30 MINUTES
e. REINSTALL MANIFOLD TESTED
HYDROSTATICALLY TO CUSHION
THE ARRESTING ENGINE ACCUMU
WITH NORMAL ARRESTING ENGINE
13. ALL TORQUE JOINTS MUST BE SAFETY W
SAFETY WIRING SHALL BE IN ACCORDAN
14. FOR BATTERY POSITION INDICATOR ELEC
NO 504690
15. P-6 TUBE SPECIFICATIONS ARE AS FOLLO
(a) MATERIAL TO BE IN ACCORDANCE W
(b) STOCK SIZE 4 OD × 2.500 ID × 18 LG
(c) HEAT TREAT TO BRINELL 180-220
MIL-H-6875 DESIGN UTS 90,000

REVISIONS				
SYM	ZONE	DESCRIPTION	DATE	APPROVED
A		NRN. CL RCHG: [illegible] ADDED 18 FT-0 DIM. (2 PLACES). 20 FT-0 DIM (2 PLACES) WAS 10 FT-0 AND 6 FT-6 RESPECTIVELY. CHANGED NOTES PERTAINING TO THESE DIMS. 612460-1, 2879 WAS 70-3949-1, 94 PR. CEB	4/4/62	
B		SEE REVISION NOTICE R LEAN	12/4/62	

SA TYPICAL DECK AND OVERHEAD MOUNTED INSTALLATION
E ANCHOR DAMPER (610096-1) UTILIZING THE ARRESTING
DER PRESSURE AS AN OPERATING MEDIUM LOCATION OF
MBLIES MAY VARY FROM THAT SHOWN (SEE DIMENSIONS
X#) BUT ON ALL INSTALLATIONS PIPE RUNS FROM
(504176-1) TO DAMPER ASSEMBLIES (610096-1) MUST
GTH. ANY VARIATION OF THE INSTALLATION AS SHOWN
OVED BY THE NAVAL AIR ENGINEERING LABORATORY (SI)
LOAD TRANSFERRED FROM EACH CABLE ANCHOR DAMPER
STRUCTURE THRU THE SHEAR BLOCK 175,000 LBS
CTION
TS SHALL BE DRILLED FOR LOCKWIRING IN ACCORDANCE
320662
LL BE CLEANED, FLUSHED AND PRESERVED AS REQUIRED
E WITH MK 7 AG SERVICE BULLETIN NO 168
ALL BE MARKED "HHP" (HYDRAULIC HIGH PRESSURE) OR "HMP"
EDIUM PRESSURE) WITH DIRECTIONAL FLOW ARROWS
ON TO BE PLACED NEAR VALVES ON PRESSURE SIDE
BLE, OTHER LINES WHERE CLEARLY VISIBLE PAINT
ACK IN ACCORDANCE WITH SPEC MIL-P 15149 LETTER
E 1½ INCH
POSED NON-WORKING AND NON-BEARING SURFACES IN ACCORDANCE
-2
CESS SHALL BE IN ACCORDANCE WITH MIL-STD-278, CLASS
EPT
ROD SHALL BE IN ACCORDANCE WITH MPR 1400
OGRAPHIC INSPECTION FOR ALL WELDS IN ACCORD WITH SECT 9
(PL4) WELDED IN ACCORDANCE WITH MIL-STD-22
AND TOLERANCES ARE IN ACCORDANCE WITH MIL STD-8
AND ROUGH IDENTICAL PARTS, SOME PARTS ARE
OPPOSITE HANDED TO AGREE WITH THE ENGINE ASSY
AND 3 SHALL BE IN ACCORDANCE WITH MPR 1 CLASS
MP EXCEPT THAT DIMENSIONS AND TOLERANCES SHALL BE IN
WITH SPEC AN P 404
ASION AND DESIGNATIONS SHALL BE INTERPRETED IN
WITH HANDBOOK H28 AND MIL-D-8 RESPECTIVELY
AND P SHALL BE SUBJECTED TO THE FOLLOWING
TESTS WITH NO LEAKAGE OR PERMANENT DEFORMA
UIPMENT NECESSARY FOR PERFORMANCE OF TESTS
PLIED BY THE INSTALLATION ACTIVITY
NECT MANIFOLDS MUST BE BETWEEN THE OPERATING PISTON
THE DAMPERS AND THE ARRESTING ENGINE RETRACTION
AND SUBJECT THESE MANIFOLDS TO A HYDROSTATIC
PRESSURE OF 4000 PSI FOR A PERIOD OF 5 MINUTES
NECT PIPING BETWEEN FLOW CONTROL VALVES AND
ING HEADS OF DAMPER AND SUBJECT THESE PORTIONS
DROSTATIC TEST PRESSURE OF 3000 PSI FOR A
OF 15 MINUTES FLOW CONTROL VALVES [illegible] 2
E INCLUDED IN THE TEST
ALL MANIFOLDS TESTED UNDER 2a APPLY 1000 PSI
STATICALLY TO CUSHIONING END OF DAMPERS THRU
RESTING ENGINE ACCUMULATOR PIP NO 11 IN ACCORDANCE
ORMAL ARRESTING ENGINE TEST PROCEDURE
OINTS MUST BE SAFETY WIRED AS SHOWN IN DETAIL
NG SHALL BE IN ACCORDANCE WITH MS33540
POSITION INDICATOR ELECTRICAL SYSTEM SEE DWG

CIFICATIONS ARE AS FOLLOWS
AL TO BE IN ACCORDANCE WITH MPR 1, CL 4130 GR MP
IZE 4 OD × 2 300 ID × 18 LG
EAT TO BRINELL 180-220 IN ACCORDANCE WITH
6375, DL SIGN UTS 90,000 PSI

613088-1	16	16	MS35303-217	SCREW					
	2	2	MS28778-8	GASKET					
	16	16	MS20995C47	LOCKWIRE					
	16	16	MS20002C14	WASHER					
	4	4	AN6227-46	PACKING O'RING					
	2	2	AN6227-40	PACKING O'RING					
	2	2	AN6227-39	PACKING O'RING					
	12	12	AN960-1816	WASHER					
	32	32	AN960-1416	WASHER					
	8	8	AN960-1216	WASHER					
	4	4	AN935-416	LOCKWASHER					
	4	4	AN315-4R	NUT					
	4	4	AN4-4A	BOLT					
	1	1	A403184-29	ELBOW					
	3	3	A403184-27	ELBOW					
	1	1	A403181-28	TEE					
	2	2	A315526-1	BOSS-WELDING					
	3	3	A315373-10	ELBOW					
	11	11	A312872-9XXM	RING-WELDING					
	14	14	A312872-7XXM	RING-WELDING					
	10	10	A312872-7X	RING-WELDING					
	13	13	A312872-5X	RING-WELDING					
	2	2	C91533-12	REDUCER					
	1	1	A91504-4	FLANGE					
	12	12	90444-935	BOLT					
	16	16	90444-729	BOLT					
	16	16	90444-724	BOLT					
	8	8	90444-631	BOLT					
	8	8	A87885-12	NUT					
	1	1	H87769-19	GASKET					
	2	2	610096-1	CABLE ANCHOR DAMPER ASSY					
	1	1	610105-1R	BATTERY POSITIONER INSTL					
	2	2	506393-1	VALVE-FLOW CONTROL					
	1	1	504176-1	MANIFOLD TEE					
	4	4	410991-1	COUPLING-WELDING					
	2	2	410415-1	FLANGE					
	4	4	410421-13	COUPLING-WELDING					
	3	3	410421-11	COUPLING-WELDING					
	2	2	410413-1	FLANGE					
	2	2	410408-1	FLANGE					
	2	2	409528-1	ELBOW					
	3	3	408500-2	INSTRUCTION PLATE					
	8	8	408500-1	INSTRUCTION PLATE					
	1	1	408110-1	LIGHT BOX ASSY					
	2	2	407561-1	FLANGE					
	2	2	320532-2	PLATE ORIFICE					
	2	2	320532-1	PLATE ORIFICE					
	3	3	319475-1	VENT VALVE ASSY					
	12	2	613088-6	TUBE	CUT TO SUIT	STEEL	SEE NOTE 3		
	1	1	-5	PIPE-3 IPS × 14"	CUT TO SUIT	STEEL	WW-P-404, CLASS B, SCS		
			-4	PIPE-2 IPS × 30"	CUT TO SUIT	STEEL	WW-P-404, CLASS B, SCS		
	1	1	-3	PIPE-4 IPS (XXSTG) × 24"	CUT TO SUIT	STEEL	SEE NOTE 10		
613088-1			-2	PIPE-3 IPS (XXSTG) × 10"	CUT TO SUIT	STEEL	SEE NOTE 10		
			613088-1R	DAMPER INSTALLATION	(SEE NOTE 9)				
QUANTITY REQUIRED			PART NUMBER	DESCRIPTION	STOCK	MATERIAL	SPECIFICATION	UNIT OF MEAS	ZONE

LIST OF MATERIALS

613088

CLASSIFICATION OF CHARACTERISTICS
CRITICAL - C1 TO C1
MAJOR - M TO M
MINOR - ALL OTHER CHARACTERISTICS

MPR 1
MPR 1201
MPR 1400

MECHANICAL FINISH SURFACE ROUGHNESS IN MICROINCHES

MK 7 MOD 3

DRAWN	RADITZ	12 OCT 60
CHECKED		
MATERIAL		
ANALYZED		
SUPERVISOR		
APPROVED		

NAVAL AIR ENGINEERING LABORATORY (SI)
NAVAL AIR ENGINEERING CENTER, PHILA., PA. 19112

DAMPER INSTALLATION
CABLE ANCHOR
DECK AND OVERHEAD MOUNTED

CODE IDENT NO. 00000 | SIZE H | DRAWING NO. 613088

SCALE 1/4 & AS NOTED | SHEET

FIGURE 3

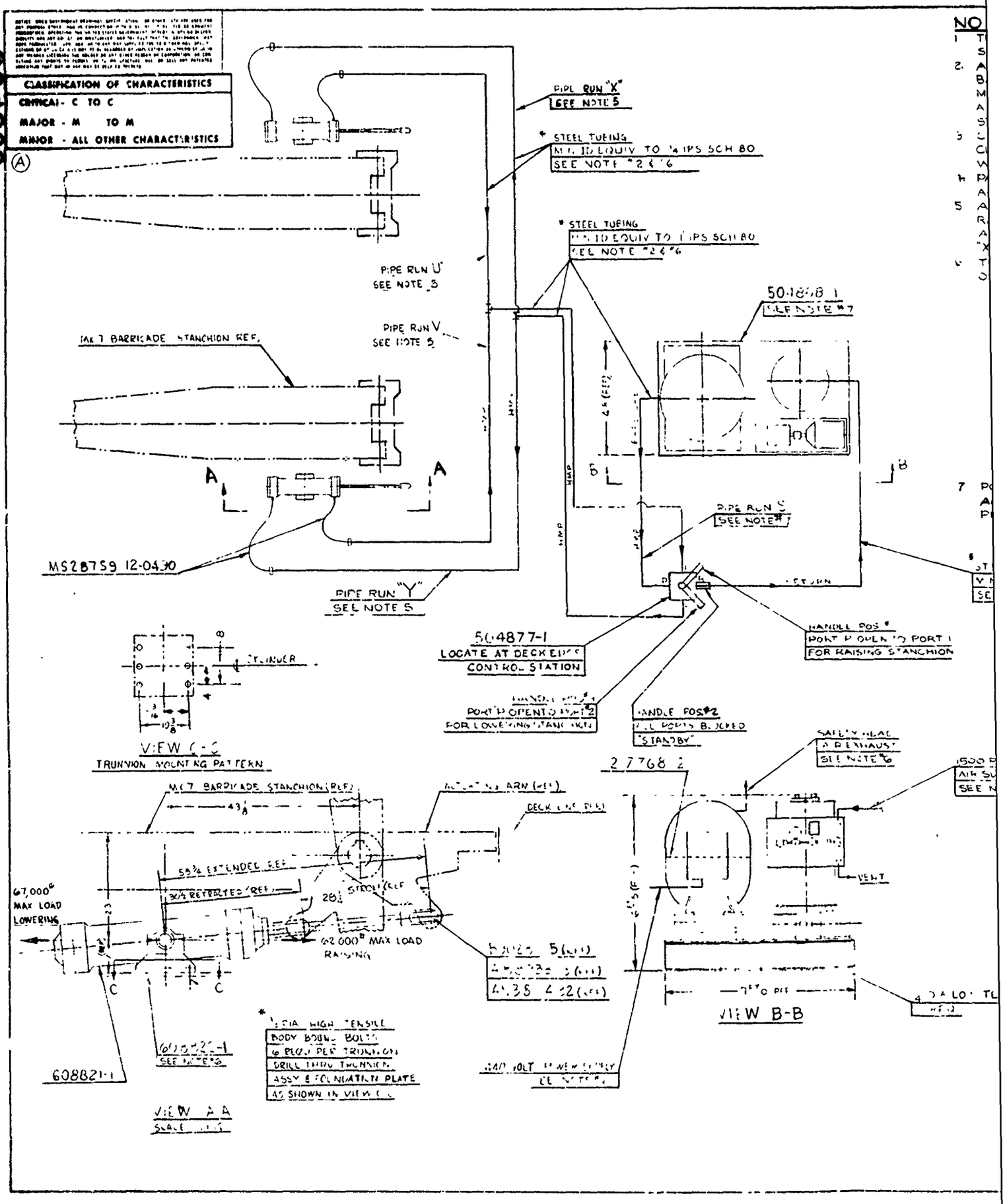
CLASSIFICATION OF CHARACTERISTICS
CRITICAL - C TO C
MAJOR - M TO M
MINOR - ALL OTHER CHARACTERISTICS
PIPE RUN "X"
SEE NOTE 5
STEEL TUBING
SEE NOTE #2 & #6
STEEL TUBING
SEE NOTE #2 & #6
PIPE RUN U
SEE NOTE 5
PIPE RUN V
SEE NOTE 5
MK 7 BARRICADE STANCHION REF.
MS28759 12-0430
PIPE RUN "Y"
SEE NOTE 5
504877-1
LOCATE AT DECKEDGE
CONTROL STATION
HANDLE POS #
PORT P OPEN TO PORT 1
FOR RAISING STANCHION
HANDLE POS #2
ALL PORTS BLOCKED
"STANDBY"
VIEW C-C
TRUNNION MOUNTING PATTERN
MK 7 BARRICADE STANCHION (REF)
67,000# MAX LOAD LOWERING
62,000# MAX LOAD RAISING
608821-1
VIEW A-A
VIEW B-B
SAFETY HEAD
SEE NOTE #6
VENT
BODY BOUND BOLTS
6 REQ'D PER TRUNNION
DRILL THRU TRUNNION
ASSY & FOUNDATION PLATE
AS SHOWN IN VIEW C-C

REVISIONS			
SYM	DESCRIPTION	DATE	APPROVAL
A	N.R.N CLASS "XR" ADDED CLASS. OF CH.JR. JPC	6/6/67	

NOTES

1. THIS DRAWING SHOWS THE ARRANGEMENT OF A HYDRAULIC CONTROL SYSTEM FOR RAISING AND LOWERING THE MK7 BARRICADE STANCHIONS.
2. ALL PIPING COMPONENTS SHALL BE SUITABLE FOR USE WITH WATER BASE HYDRAULIC FLUID, SPECIFICATION MIL-H-22072. ALL PIPING MARKED HMP (HYDRAULIC MEDIUM PRESSURE) SHALL BE SUITABLE FOR A WORKING PRESSURE OF 1500 PSI AND SUBJECTED TO A HYDRO STATIC TEST OF 2250 PSI.
3. CYLINDERS, PIPE LINES, AND ACCUMULATORS SHALL BE THOROUGHLY CLEANED AS NECESSARY TO INSURE REMOVAL OF ALL METALLIC WASTE AND FOREIGN MATTER PRIOR TO FILLING WITH FLUID.
4. PAINT ALL EXPOSED NON WORKING AND NON PAYING SURFACES IN ACCORDANCE WITH MDR 1201-12.
5. ALL PIPING BETWEEN FLEXIBLE HOSE AND CONTROL VALVE TO BE RUN TO BEST ADVANTAGE OF SHIP, BUT LENGTH OF PIPE RUNS "U" AND "V" SHALL BE OF APPROXIMATE EQUAL LENGTH AND RUNS "X" AND "Y" SHALL BE OF APPROXIMATE EQUAL LENGTH AS SHOWN.
6. THE INSTALLING ACTIVITY SHALL FURNISH AND INSTALL UNDER ITS OWN COGNIZANCE THE FOLLOWING ITEMS.
   (a) A 1500 PSI AIR SUPPLY LINE WITH A STRAINER FOR CHARGING THE ACCUMULATOR
   (b) A 440 VOLT, 60 CYCLE, THREE PHASE POWER SUPPLY LINE FOR THE OPERATION OF A 5 HP ELECTRIC MOTOR; WITH POWER SWITCH (AND CIRCUIT PROTECTION AS REQUIRED) MOUNTED WITHIN READY ACCESS OF POWER PACKAGE.
   (c) FOUNDATION STRUCTURE FOR SUPPORT TRUNNION TO WITHSTAND LOADS INDICATED IN VIEW A-A
   (d) ALL ITEMS MARKED THUS * INCLUDING BOLTS SUPPORT BRACKETS, PIPE, PIPE FITTINGS, PIPE SUPPORTS
   (e) SUITABLE DISCHARGE LINE FOR SAFETY HEAD AIR EXHAUST LINE
7. POWER PACKAGE 504868-1 SHALL BE LOCATED TO BEST ADVANTAGE OF SHIPS, HOWEVER, LOCATION SHALL BE MADE TO PROVIDE FOR THE SHORTEST POSSIBLE PIPE RUN'S.

B

* STEEL TUBING
N.N.S.D. EQUIV TO TIPS SCH 80
SEE NOTE #2 & #6

N.S.D. PORT 1
STANCHION

REFERENCES
1 POWER PACKAGE ELECTRICAL INSTALLATION - - - - DWG 504867
2 POWER PACKAGE PIPING ASSEMBLY - - - - - - - - DWG 608857

1500 PSI MIN.
AIR SUPPLY
SEE NOTE #6

4 DIA. 0° TENSILE PLATES
SEE 12

504866

		504866-1	4	MS24 - 20-4	HOSE ASSY							
		504866-1	2	608822-1	TRUNNION ASSY							102
			2	608821-1	CYLINDER ASSY							502
			1	504877-1	VALVE INSTALLATION							
			1	504868-1	POWER PACKAGE							
		504866-1	110	2 FT. 8 2	HYDRAULIC FLUID							
				504866-1	BARRICADE	STANCHION INSTALLATION						SEE NOTE 6

		BARRICADE STANCHION HYDRAULIC CONTROL INSTALLATION	NAVAL AIR ENGINEERING FACILITY
		MK7 BARRICADE	504866

2

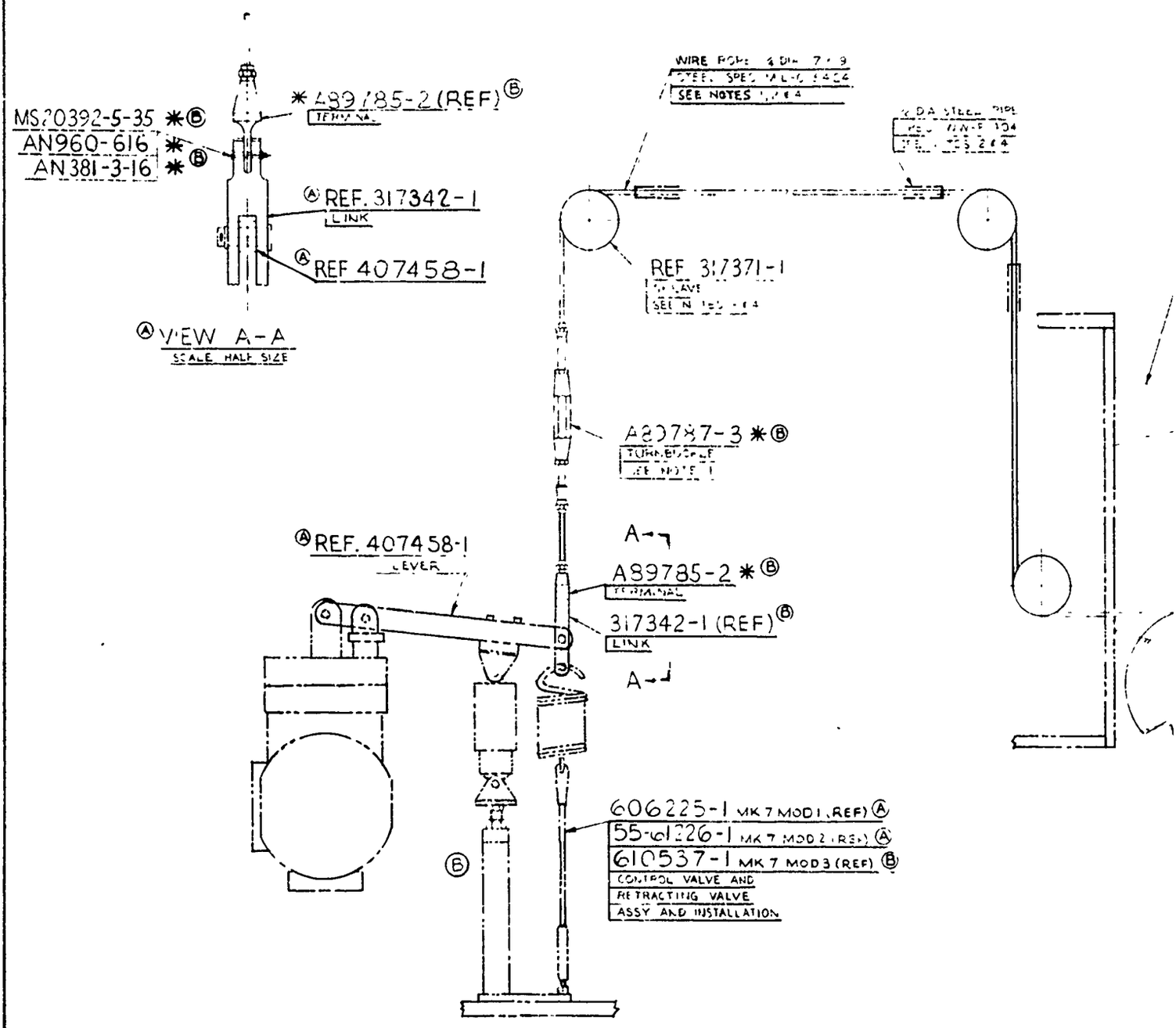
MS20392-5-35 ✱Ⓑ
AN960-616 ✱
AN381-3-16 ✱Ⓑ
✱ A89785-2 (REF)Ⓑ
TERMINAL
Ⓐ REF. 317342-1
LINK
Ⓐ REF 407458-1
Ⓐ VIEW A-A
SCALE HALF SIZE
WIRE ROPE
SEE NOTES
REF 317371-1
SEE NOTES
A89787-3 ✱Ⓑ
TURNBUCKLE
SEE NOTE 1
Ⓐ REF. 407458-1
LEVER
A89785-2 ✱Ⓑ
TERMINAL
317342-1 (REF)Ⓑ
LINK
A
A
606225-1 MK 7 MOD 1 (REF) Ⓐ
55-61226-1 MK 7 MOD 2 (REF) Ⓐ
610537-1 MK 7 MOD 3 (REF) Ⓑ
CONTROL VALVE AND
RETRACTING VALVE
ASSY AND INSTALLATION
Ⓑ

REVISIONS			
SYM	DESCRIPTION	DATE	APPROVAL
A	[illegible]	[illegible]	[illegible]
B	ON DWG: CORRECTED PICTURE BY ADDING SHOCK ABSORBER. FOR INFORMATION ON MISCELANEOUS CHANGES, SEE REVISION SLIP. J.C.	1/12/68	SJ

NOTES

1. NO TURNBUCKLES OR SPLICES IN CABLE TO BE LOCATED WITHIN 6 IN OF SHEAVES BEFORE RETRACTING AND AFTER RETRACTING.
2. CONTROL CABLES ARE TO BE ENCASED IN ½" STD PIPE GUARDS, WITH SUITABLE PIPE SUPPORTS AS REQ'D.
3. QUANTITY OF SHEAVES & METHOD OF MOUNTING TO BE DETERMINED BY INSTALLING ACTIVITY
4. (B) SHEAVES CABLES, FAIRLEADS, FAIRLEAD SUPPORTS, MOUNTING BRACKETS FOR SHEAVE ASSEMBLIES 317371-1, STOP AND MOUNTING BRACKETS FOR DECK EDGE CONTROL LEVER 407430-1, REQUIRED FASTENERS AND ALL PARTS MARKED WITH * ARE TO BE SUPPLIED BY INSTALLING ACTIVITY.
5. WIRE ROPE TO BE SECURED IN SOCKET 317373-1 AT INSTALLATION FOR POURING INSTRUCTIONS, SEE MK 7 A.O. SERVICE BULLETIN # 97
6. TOP TO BE NOTATED WITH LEVER IN VERTICAL POSITION
7. PAINT IN ACCORDANCE WITH [illegible]

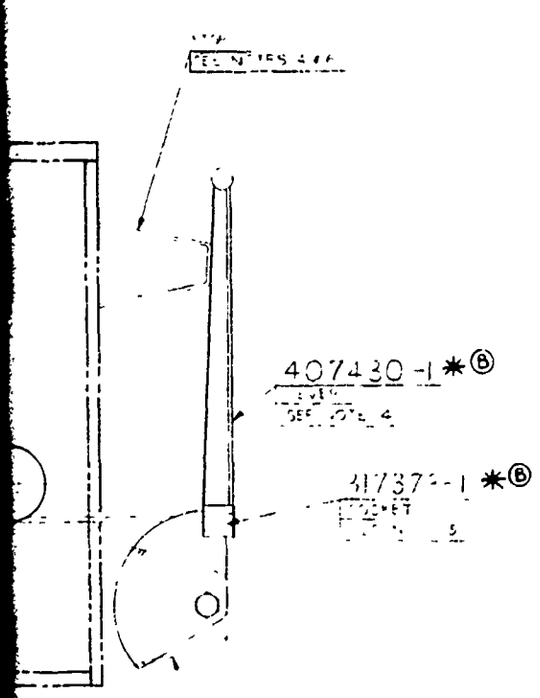

	504206	1	NAS392-5-35	PIN-FLAT HD	
		1	AN960-6-6	WASHER FLAT	
		1	AN381-3-6	COTTER PIN	
		1	A89[illegible]-3	TURNBUCKLE	
			AR97R5-2	TERMINAL	
		1	407430-1	LEVER	
	504206-1	1	317373-1	SOCKET	
(B)	[illegible]	1	[illegible]	[illegible]	
			504206-1	CONTROL INSTALLATION	SEE NOTE 7

DRAWN	J. CASEY	30 JUL 59	CONTROL INSTALLATION MANUAL TYPE RETRACTING VALVE CONSTANT RUNOUT INCREASED CAPACITY
MANCINI	15A2659		
	1/12/68		MK 7 MOD 1, MOD 2 & MOD 3

NAVAL AIR ENGINEERING FACILITY
(SHIP INSTALLATIONS)
NAVAL AIR MATERIAL CENTER
PHILADELPHIA, PA

504206

504206

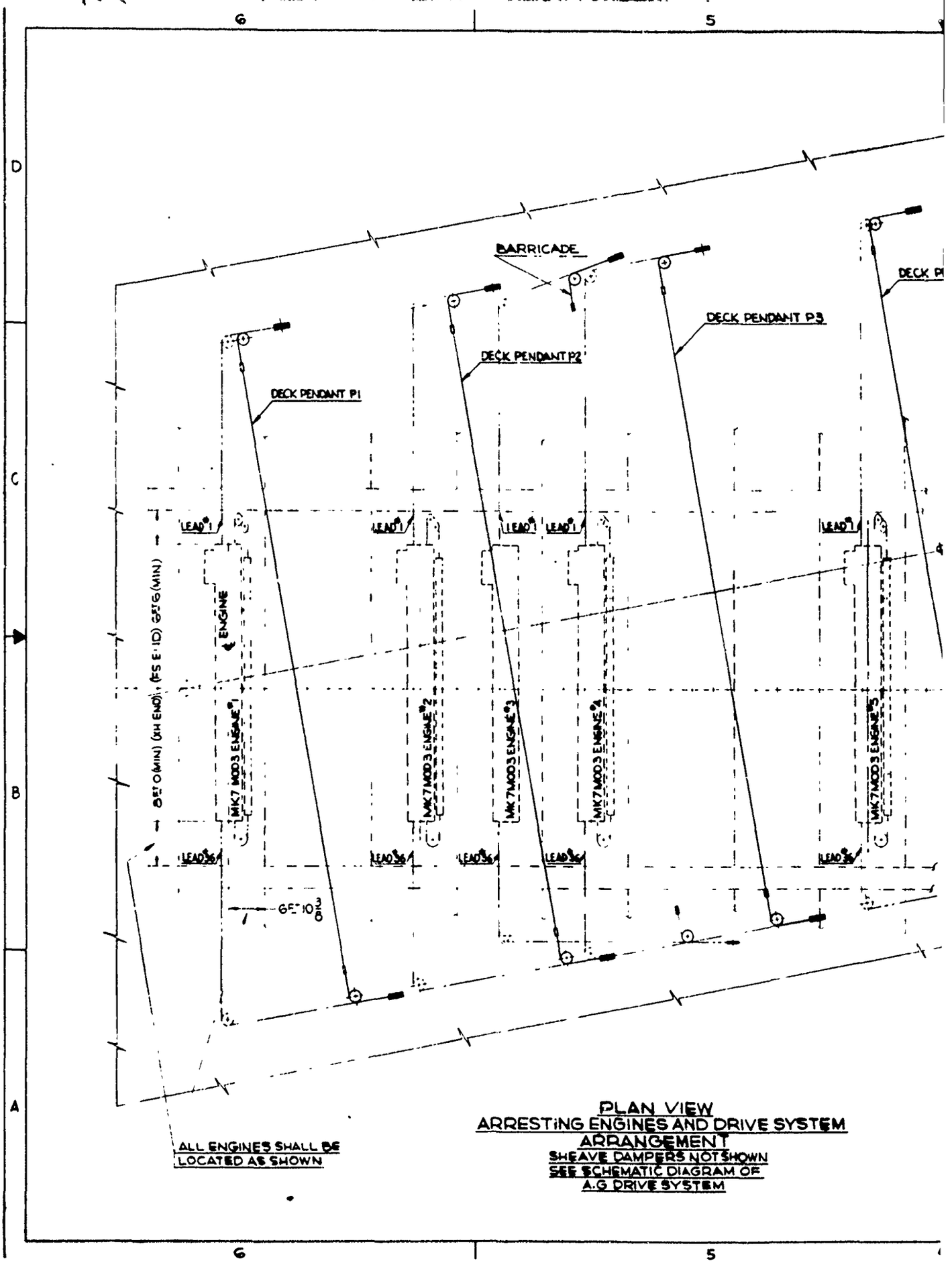

PLAN VIEW
ARRESTING ENGINES AND DRIVE SYSTEM ARRANGEMENT
SHEAVE DAMPERS NOT SHOWN
SEE SCHEMATIC DIAGRAM OF A.G DRIVE SYSTEM

REFERENCE PLANS: NAEC DWG. NO.

1. ARRESTING ENGINE - INSTALLATION DATA - MK 7 MOD 3 02-61946
2. ARRESTING GEAR - DRIVE SYSTEM - INSTALLATION 612792
3. SHEAVE DAMPER - TYPICAL INSTALLATION 613937
4. ANCHOR DAMPER - TYPICAL INSTALLATION 613088
5. MK 7 MOD 3 ARRESTING GEAR - FLIGHT DECK STUDY 616110

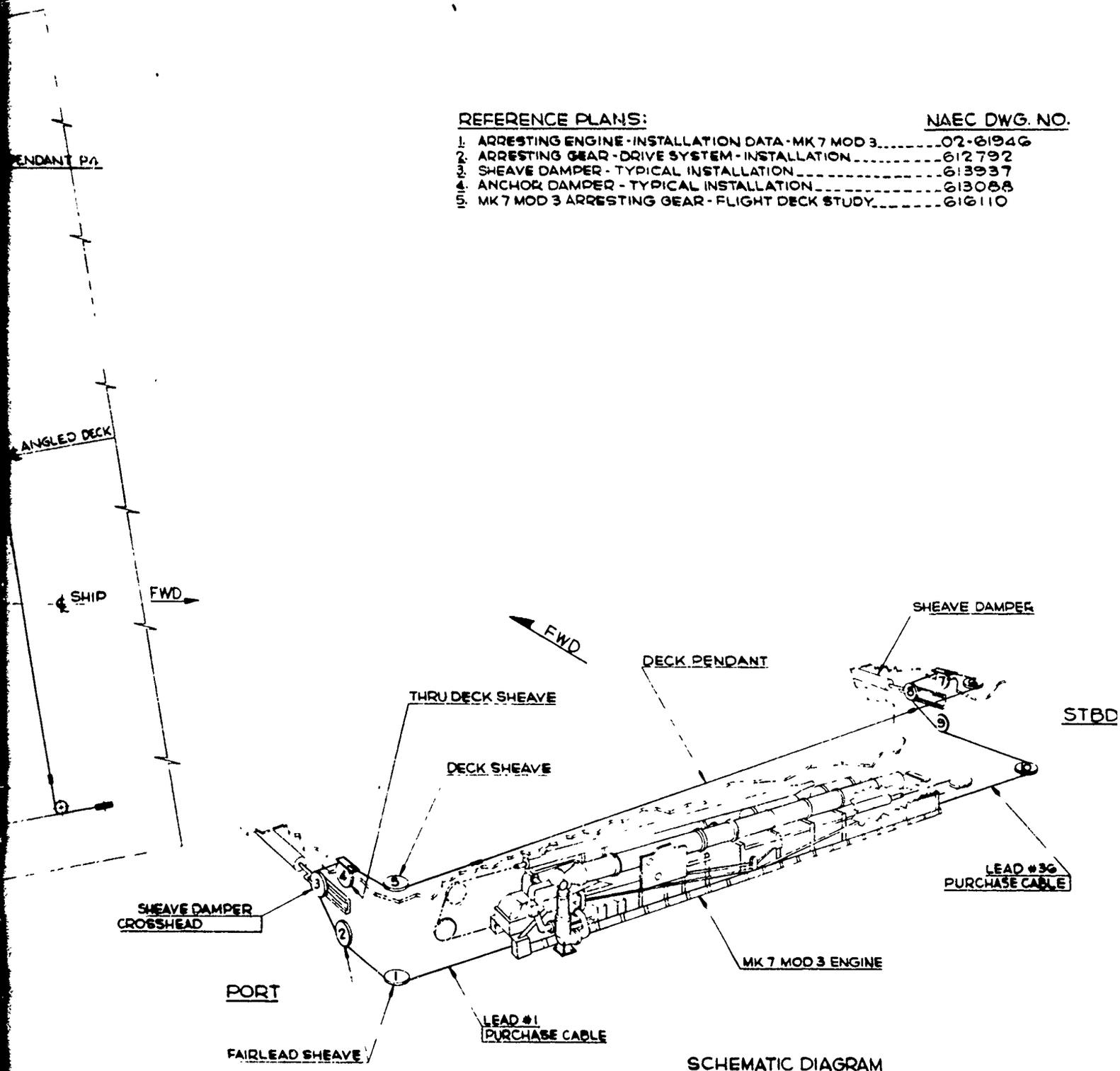

SCHEMATIC DIAGRAM
ARRESTING GEAR DRIVE SYSTEM
SEE NOTE #3A

616363

2

NOTES:

1. THIS DRAWING SHOWS THE OPTIMUM MARK 7 MOD 3 ARRESTING ENGINE AND DRIVE SYSTEM ARRANGEMENT AS PLANNED FOR FUTURE AIRCRAFT CARRIERS.
2. AN ARRESTING ENGINE COMPARTMENT SHALL BE A MINIMUM OF FOUR (4) FRAMES (16 FT 0) FOR THE SUITABLE INSTALLATION OF ONE (1) ENGINE.
3. THIS DRAWING DEPICTS A PROPOSED ARRANGEMENT OF DESIRED ARRESTING ENGINE LOCATIONS. THE PREMISE FOR LOCATION WAS BASED ON THE FOLLOWING.
   A. TO PROVIDE AN OPTIMUM DRIVE SYSTEM ARRANGEMENT WITH UTILIZATION OF A MINIMUM OF TEN (10) SHEAVES FOR EACH INDIVIDUAL SYSTEM.
   B. AS A PRECAUTIONARY MEASURE, CONSIDERING AS PARAMOUNT THE SAFETY OF FLIGHT DECK PERSONNEL, PREVIOUS OCCURRENCES OF CABLE BREAKAGE HAVE INDICATED BREAKAGE AT THE 28 INCH P.D. ENGINE SHEAVES WITH CONSEQUENT CABLE WHIPLASH RESULTING ON THE FLIGHT DECK AT THE OPPOSITE SIDE OF THE ARRESTING ENGINE'S 28 INCH P.D. SHEAVES. CABLE BREAKAGE FROM THE 28 INCH P.D. SHEAVES (LEAD NO. 3G) WILL RESULT IN CABLE WHIPLASH TO THE PORT SIDE OF THE FLIGHT DECK, AWAY FROM THE CARRIER ISLAND, IN AN AREA UNLIKELY TO CAUSE INJURY TO PERSONNEL.

. NO.

ER

STBD.

D #3G
CABLE

REVISIONS				
ZONE	SYM	DESCRIPTION	DATE	APPROVED

NEXT ASSEMBLY	QTY REQD	PART NUMBER	DESCRIPTION	STOCK	MATERIAL	SPECIFICATION	UNIT WT	REMARKS

LIST OF MATERIALS

UNLESS OTHERWISE SPECIFIED DIMENSIONS ARE IN INCHES
TOLERANCES ON
FRACTIONS DECIMALS ANGLES
± — ±.010 ±½°

THESE DOCUMENTS ALSO ARE A PART OF THIS DRAWING

MECHANICAL FINISH SURFACE ROUGHNESS IN MICROINCHES
✓ SURFACE ROUGHNESS IN ACCORDANCE WITH ASA B46

DRAWN	P. Bonovitz	14 Oct 68
CHECKED	F. Yates	21 Oct 68
MATERIAL	—	—
ANALYZE	—	—
SUPERVISOR	[illegible]	11/4/69
APPROVED	[illegible]	11/4/69
APPROVED	[illegible]	DATE

DESIGN'D FOR MK 7 MOD 3

REF

ENGINEERING DEPARTMENT (81)
NAVAL AIR ENGINEERING CENTER PHILA PA 19112

TITLE ARRESTING ENGINE LOCATIONS AND DRIVE SYSTEM ARRANGEMENT MK 7 MOD 3 ARRESTING GEAR PROPOSED

SIZE H | CODE IDENT NO [redacted] | DRAWING NO 616363

SCALE 1/8 = 1'-0"

616363

CLASSIFICATION OF CHARACTERISTICS
CRITICAL — C TO C
MAJOR — M TO M
MINOR — ALL OTHER CHARACTERISTICS

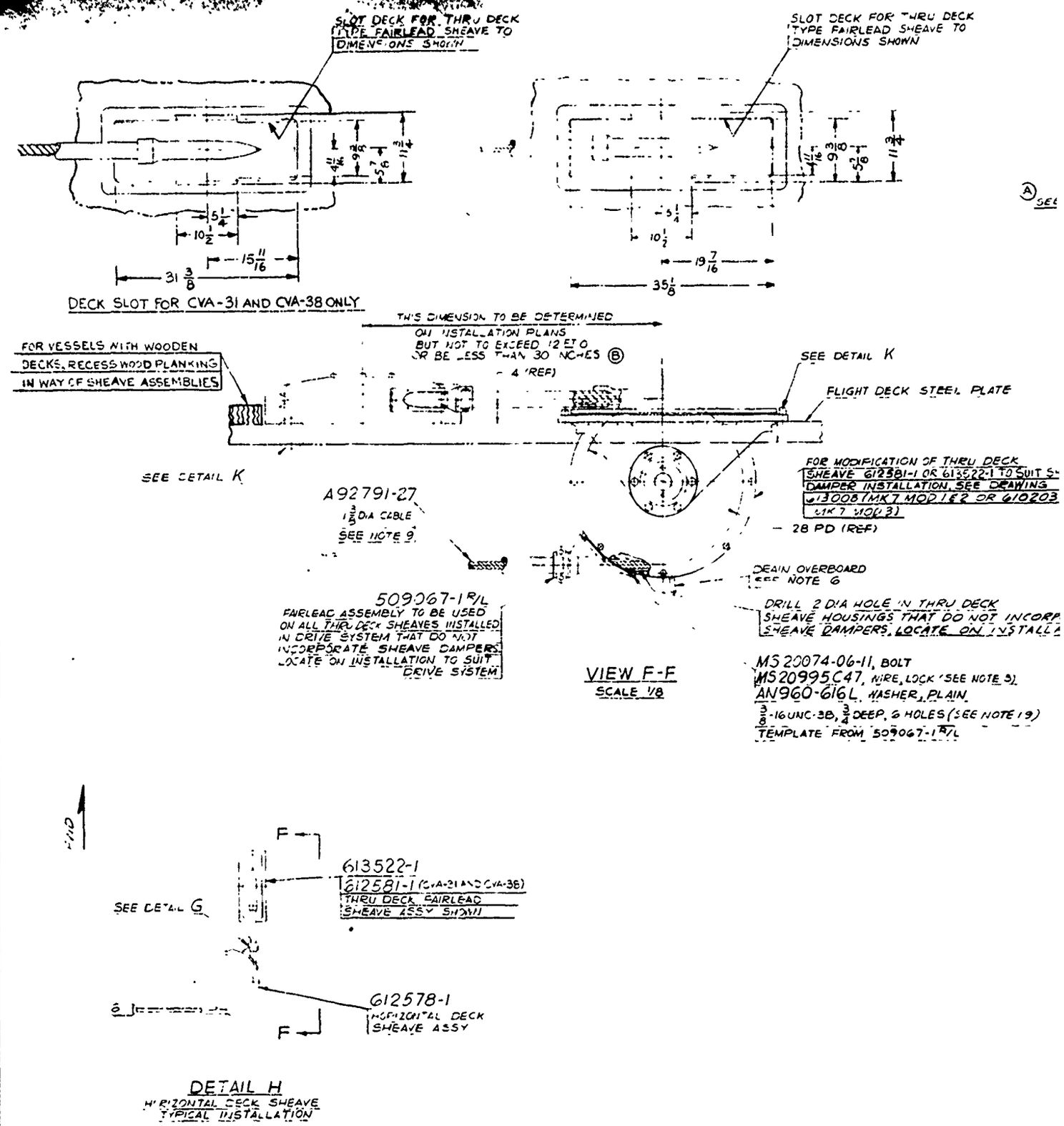
SLOT DECK FOR THRU DECK TYPE FAIRLEAD SHEAVE TO DIMENSIONS SHOWN
SLOT DECK FOR THRU DECK TYPE FAIRLEAD SHEAVE TO DIMENSIONS SHOWN
DECK SLOT FOR CVA-31 AND CVA-38 ONLY
THIS DIMENSION TO BE DETERMINED ON INSTALLATION PLANS BUT NOT TO EXCEED 12 FT O OR BE LESS THAN 30 INCHES (B)
FOR VESSELS WITH WOODEN DECKS, RECESS WOOD PLANKING IN WAY OF SHEAVE ASSEMBLIES
SEE DETAIL K
FLIGHT DECK STEEL PLATE
SEE DETAIL K
A92791-27
1 3/8 DIA CABLE
SEE NOTE 9
FOR MODIFICATION OF THRU DECK SHEAVE 612581-1 OR 613522-1 TO SUIT S DAMPER INSTALLATION, SEE DRAWING 613008 (MK 7 MOD 1 & 2 OR 610203 (MK 7 MOD 3)
28 PD (REF)
DRAIN OVERBOARD SEE NOTE 6
509067-1 R/L
FAIRLEAD ASSEMBLY TO BE USED ON ALL THRU DECK SHEAVES INSTALLED IN DRIVE SYSTEM THAT DO NOT INCORPORATE SHEAVE DAMPERS. LOCATE ON INSTALLATION TO SUIT DRIVE SYSTEM
DRILL 2 DIA HOLE IN THRU DECK SHEAVE HOUSINGS THAT DO NOT INCORP SHEAVE DAMPERS. LOCATE ON INSTALLA
VIEW F-F
SCALE 1/8
MS 20074-06-11, BOLT
MS20995C47, WIRE, LOCK (SEE NOTE 3)
AN960-616L, WASHER, PLAIN
3/8-16 UNC-3B, 3/4 DEEP, 6 HOLES (SEE NOTE 19)
TEMPLATE FROM 509067-1 R/L
FWD
613522-1
612581-1 (CVA-31 AND CVA-38)
THRU DECK FAIRLEAD SHEAVE ASSY SHOWN
SEE DETAIL G
612578-1
HORIZONTAL DECK SHEAVE ASSY
DETAIL H
HORIZONTAL DECK SHEAVE TYPICAL INSTALLATION

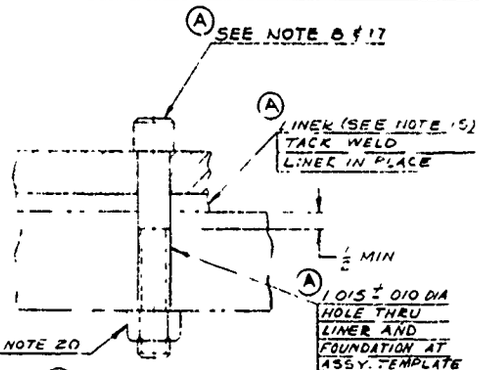

DETAIL K
TYPICAL THRU BOLT TYPE
ANCHORAGE FOR SHEAVE ASSYS
SCALE 1/2

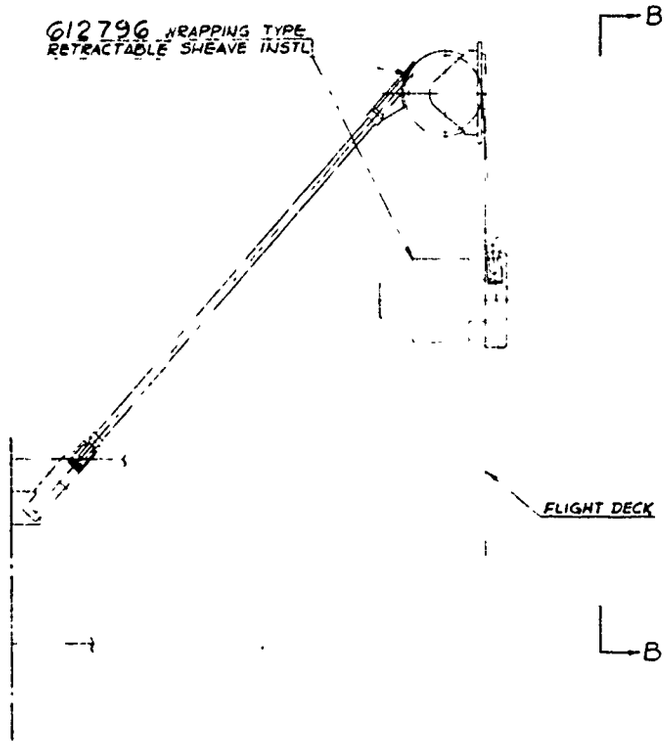

VIEW B-B

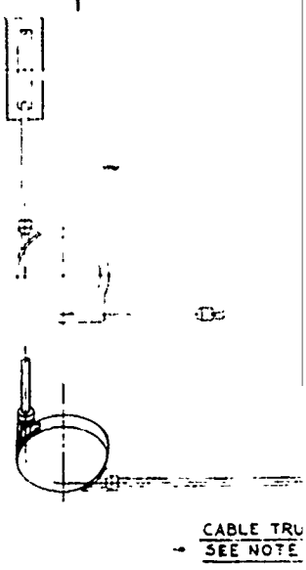

SHEAVE

RPORATE
ATIONS

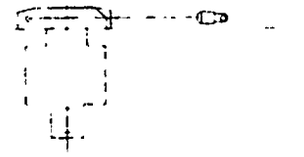

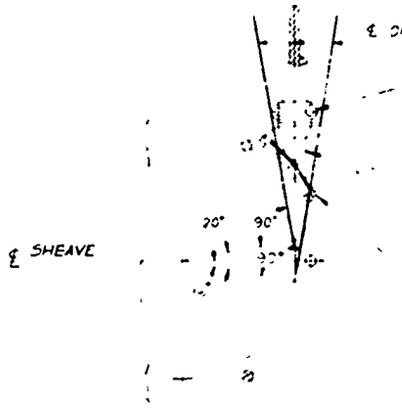

509071-1 R/L
FAIRLEAD ASSY TO BE USED ON
ALL HORIZONTAL DECK SHEAVES
SEE NOTE 10

DRILL 2 DIA HOLE IN ALL
HORIZONTAL DECK SHEAVE HOUSINGS
LOCATE TO SUIT INSTALLATION
WITHIN 20° AS SHOWN

MS 20074-06-11 BOLT
MS 20995C47 WIRE, LOCK (SEE NOTE 3)
3/8-16 UNC-3B 3/4 DEEP
6 HOLES (SEE NOTE 4)
TEMPLATE FROM 509071-1 R/L

DETAIL G
SCALE 1/8

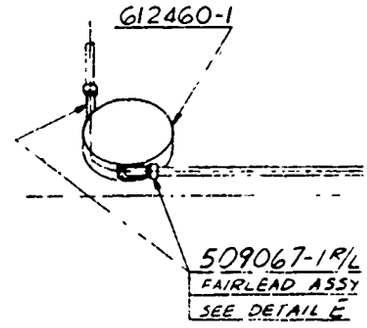

612792

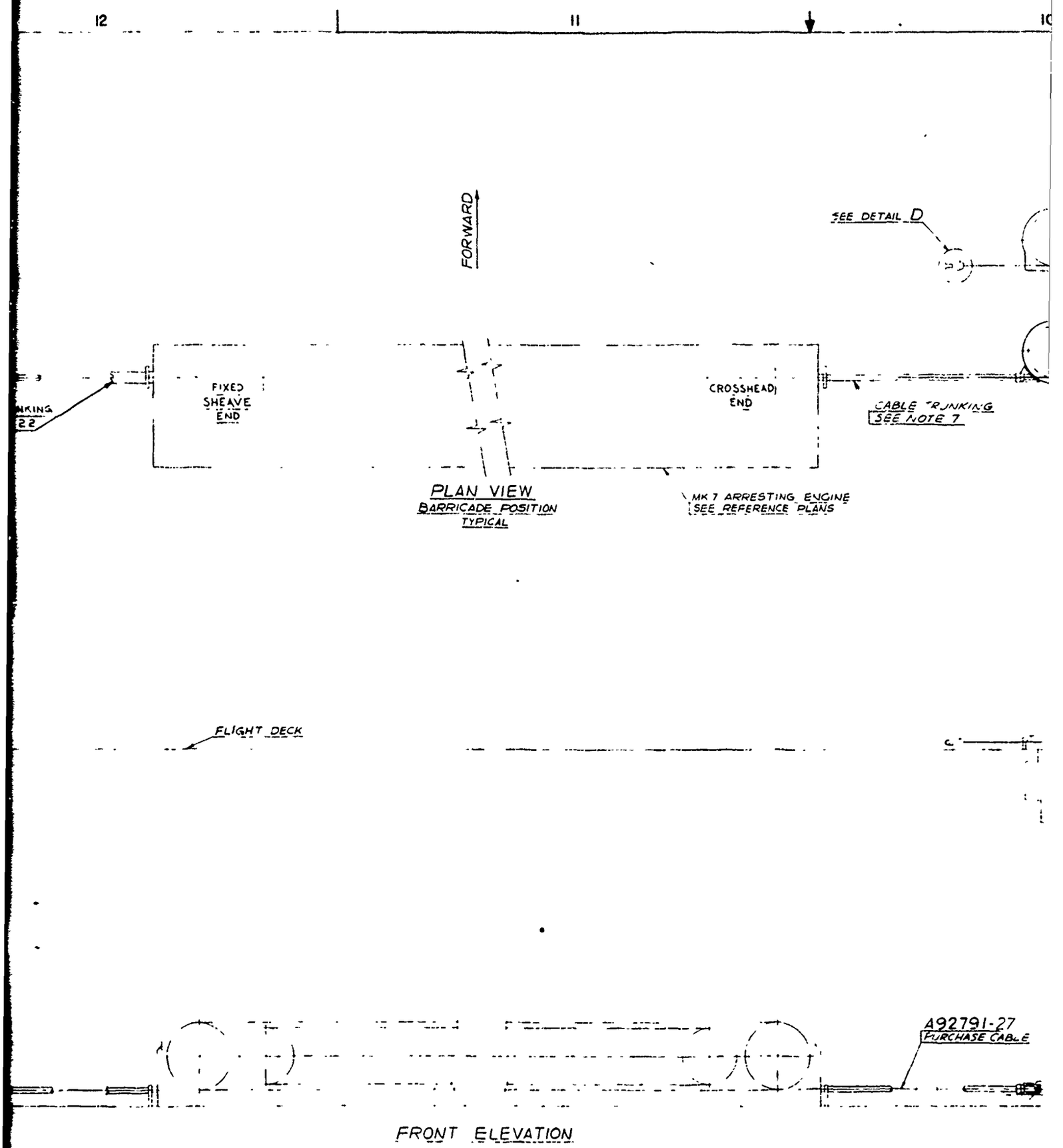
12
11
10
FORWARD
SEE DETAIL D
FIXED SHEAVE END
CROSSHEAD END
CABLE TRUNKING SEE NOTE 7
PLAN VIEW
BARRICADE POSITION TYPICAL
MK 7 ARRESTING ENGINE SEE REFERENCE PLANS
FLIGHT DECK
A92791-27
PURCHASE CABLE
FRONT ELEVATION

10 9 8

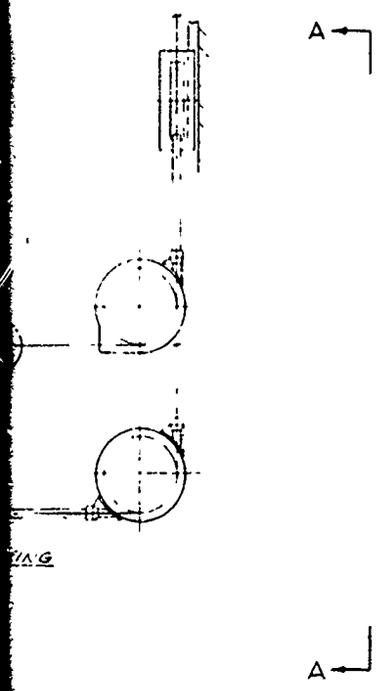

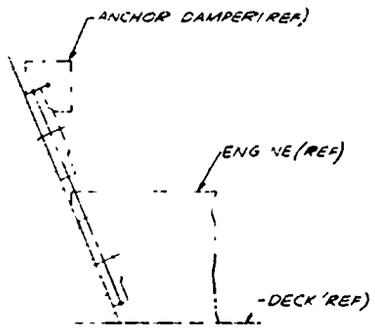

VIEW J-J

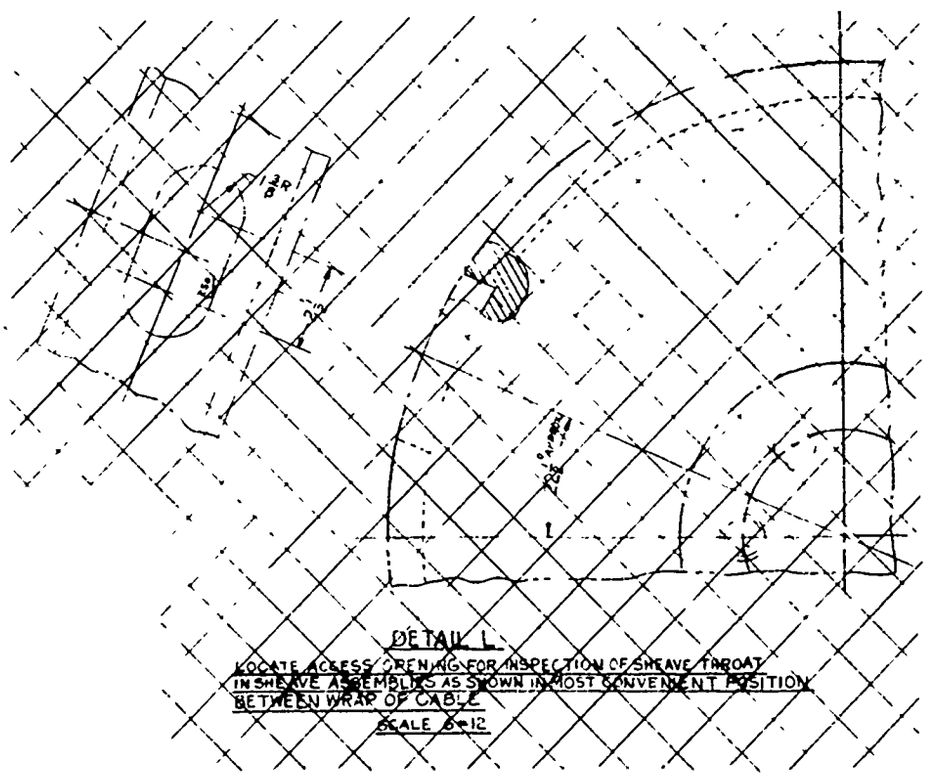

DETAIL L

LOCATE ACCESS OPENING FOR INSPECTION OF SHEAVE THROAT IN SHEAVE ASSEMBLIES AS SHOWN IN MOST CONVENIENT POSITION BETWEEN WRAP OF CABLE

SCALE 6-12

B

612792

10 9 8

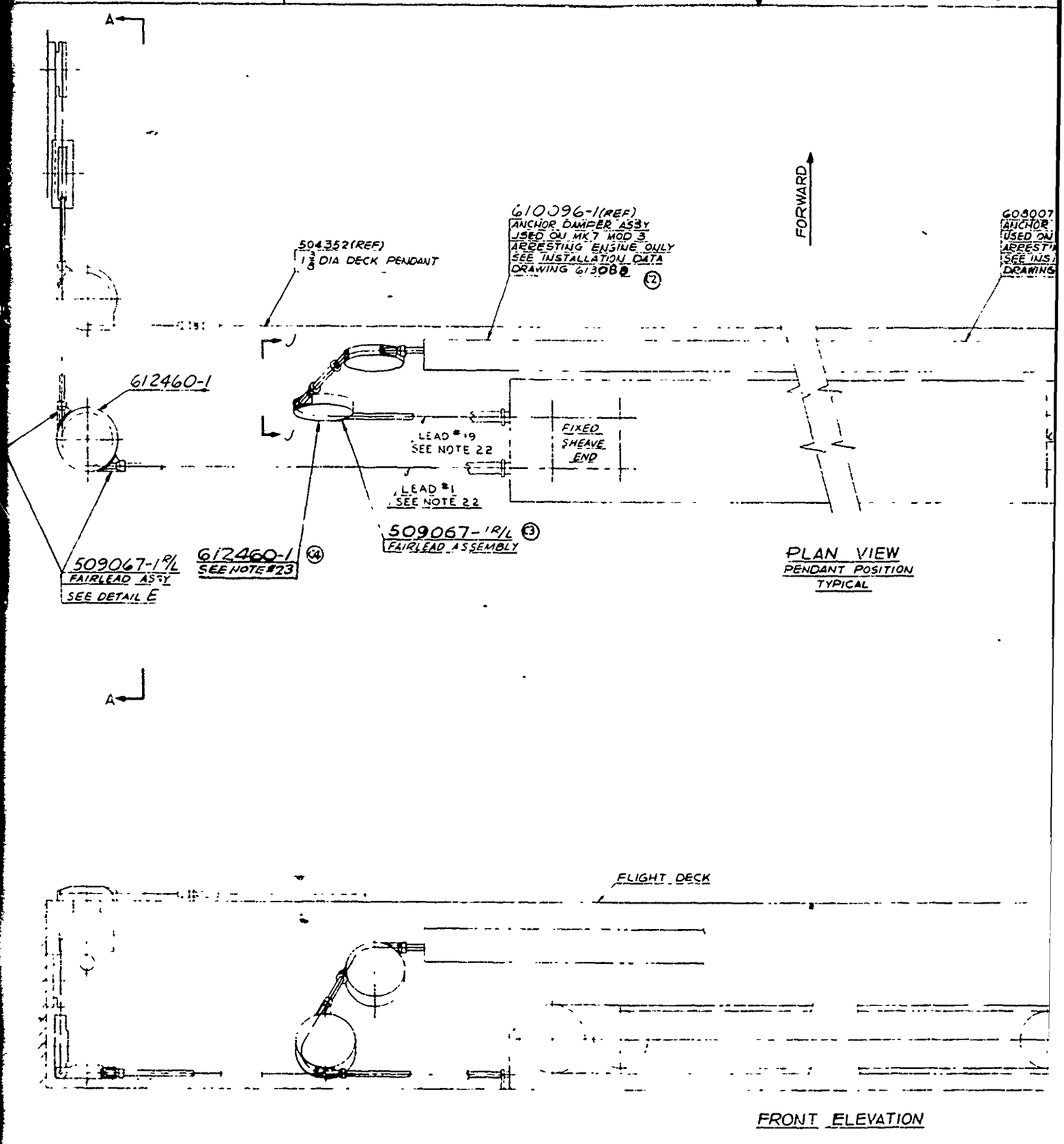
8
7
6
A
FORWARD
610096-1(REF)
ANCHOR DAMPER ASSY
USED ON MK 7 MOD 3
ARRESTING ENGINE ONLY
SEE INSTALLATION DATA
DRAWING 613088
(2)
504352(REF)
1 3/8 DIA DECK PENDANT
608007
ANCHOR
USED ON
ARREST
SEE INS
DRAWING
612460-1
LEAD #19
SEE NOTE 22
FIXED
SHEAVE
END
LEAD #1
SEE NOTE 22
509067-1R/L
FAIRLEAD ASSEMBLY
(3)
509067-1R/L
FAIRLEAD ASSY
SEE DETAIL E
612460-1
SEE NOTE #23
(4)
PLAN VIEW
PENDANT POSITION
TYPICAL
A
FLIGHT DECK
FRONT ELEVATION
8
7
6

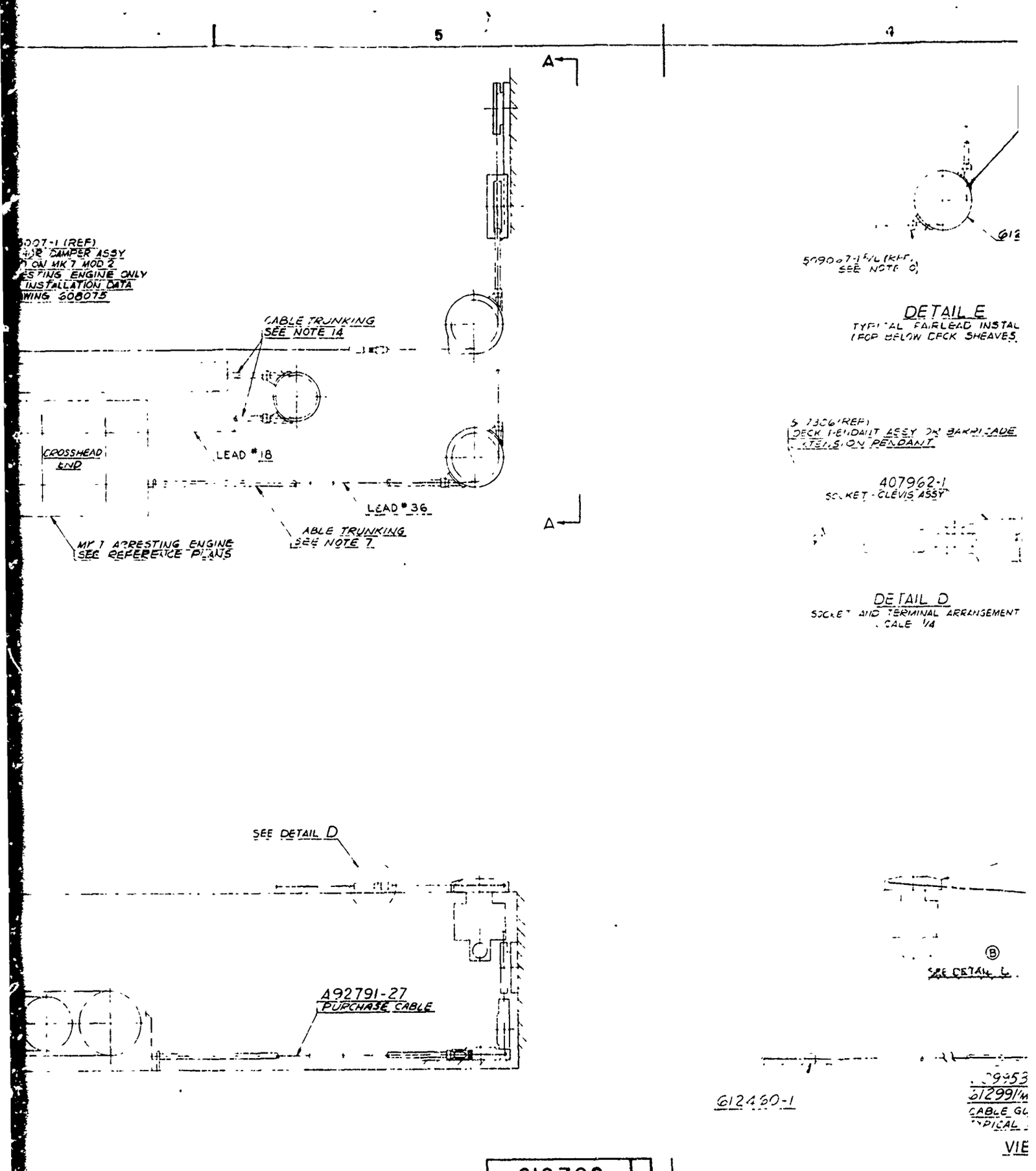
5
4
A
A
CABLE TRUNKING
SEE NOTE 14
CROSSHEAD END
LEAD #18
LEAD #36
ABLE TRUNKING
SEE NOTE 7
MK 7 ARRESTING ENGINE
SEE REFERENCE PLANS
DETAIL E
TYPICAL FAIRLEAD INSTAL
(FOR BELOW DECK SHEAVES
407962-1
SOCKET - CLEVIS ASSY
DETAIL D
SOCKET AND TERMINAL ARRANGEMENT
SCALE 1/4
SEE DETAIL D
A92791-27
PURCHASE CABLE
612460-1
612792
3
4

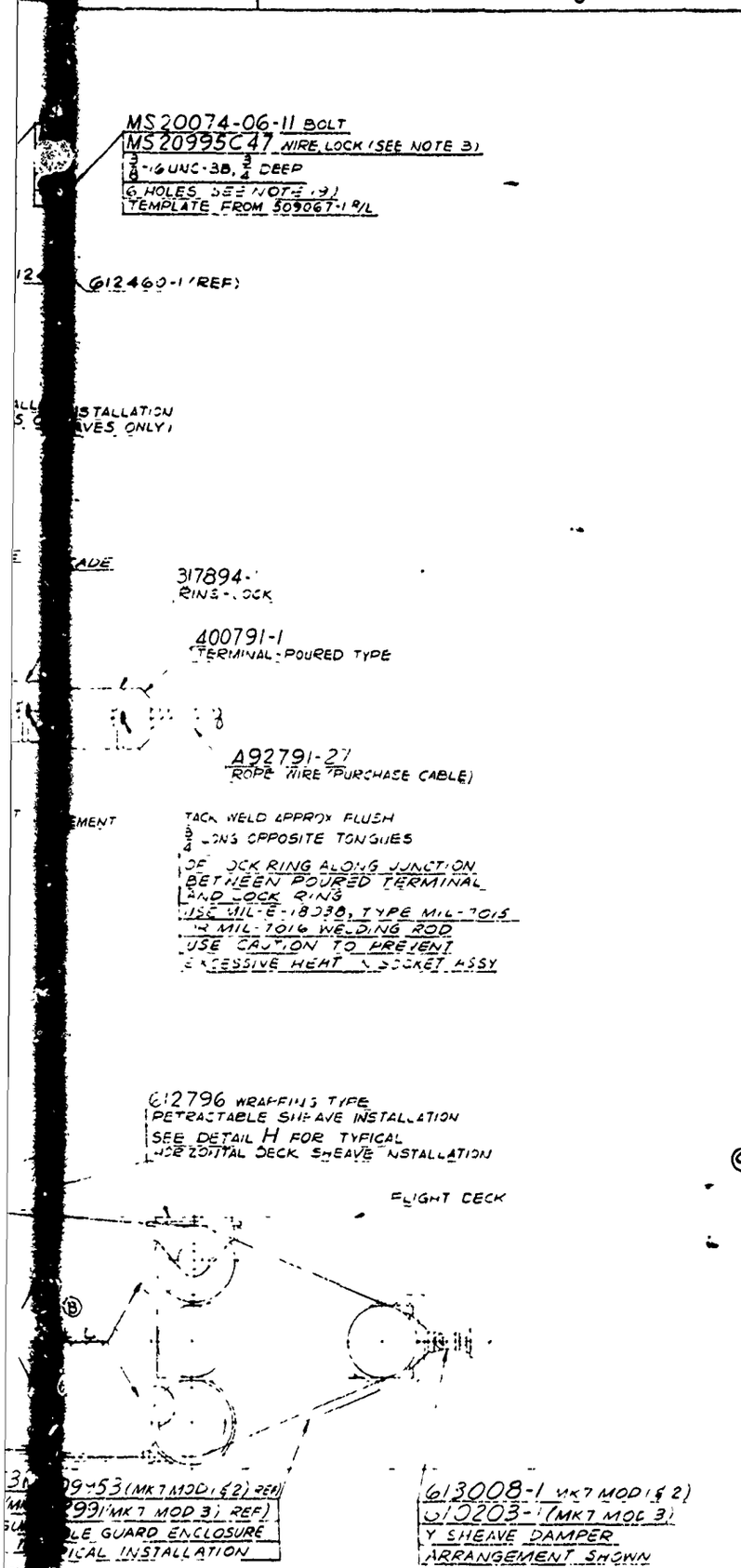

VIEW A-A

NOTES

1. THIS DRAWING SHOWS A TYPICAL INSTALLATION OF THE PENDANT AND BARRICADE DRIVE SYSTEM FOR THE MARK 7 MOD 1, MARK 7 MOD 2 AND MARK 7 MOD 3 ARRESTING ENGINES. FOR DETAIL INFORMATION SEE REFERENCE DRAWINGS LISTED BELOW.
2. ARRANGEMENT, SELECTION, QUANTITY AND TYPE OF ALL ITEMS SHALL BE INSTALLED UNDER THE COGNIZANCE OF THE INSTALLING ACTIVITY TO SUIT LOCAL CONDITIONS SUBJECT TO APPROVAL OF NAEL (SI)
3. SAFETY WIRING TO BE IN ACCORDANCE WITH MS 33540
4. SHEAVE ASSEMBLIES INSTALLED IN LOCATIONS INACCESSIBLE FOR LUBRICATION SHALL BE EQUIPPED WITH 1/8 GREASE FITTINGS PIPED TO A READILY ACCESSIBLE LOCATION.
5. ARRANGE ALL DECK EDGE TYPE FAIRLEAD SHEAVE INSTALLATIONS SO THAT DRAIN HOLE IS LOCATED IN LOWEST POSITION, SO THAT DRAINING OF SHEAVE ASSEMBLY MAY BE PIPED OVERBOARD
6. ALL THRU DECK TYPE SHEAVE ASSEMBLIES NOT PART OF SHEAVE DAMPER INSTALLATION MUST BE PIPED TO DRAIN OVERBOARD SEE VIEW F-F.
7. CABLE TRUNKS OF 2 1/2 DIAMETER PIPE, WITH SUPPORTS WHERE REQUIRED, SHALL BE INSTALLED BETWEEN ALL FAIRLEAD SHEAVES MATERIAL SHALL BE FURNISHED BY INSTALLING ACTIVITY.
8. SHEAVE ASSEMBLIES SHALL BE MOUNTED WITH 1 INCH DIAMETER HIGH TENSILE STEEL BOLTS HAVING A MINIMUM STRENGTH OF 120,000 UTS AND A MAXIMUM STRENGTH OF 142,000 UTS, (HEAT TREATED TO ROCKWELL HARDNESS C24-C32) FASTENINGS TO BE FURNISHED BY INSTALLING ACTIVITY AND SHALL BE EQUIVALENT TO NAEL (SI) (SOCKET HEAD SCREWS) STANDARD DRAWING 1340, EXCEPT AS NOTED ABOVE.
9. THE DESIGN OF ALL STRUCTURES SUPPORTING THE PARTS SHOWN ON THIS INSTALLATION MUST BE BASED ON THE 175,000 POUNDS NOMINAL BREAKING STRENGTH OF 1 3/8 DIAMETER, 6 X 25 WIRE ROPE, SPEC MIL-W-81178, WRAPPED 180° AROUND SHEAVE.
10. MOUNT FAIRLEAD ASSEMBLIES TO SUIT DRIVE SYSTEM CABLE LEAD AND SHEAVE ARRANGEMENT. WELD FAIRLEAD ASSEMBLIES TO DECK SHEAVES, THRU DECK SHEAVES AND FAIRLEAD SHEAVES IF MOUNTING BOLTS OF FAIRLEAD ASSEMBLIES ARE OBSTRUCTED BY THE SHEAVE HOUSING BOLTS.
11. ON DECK EDGE FAIRLEAD SHEAVE ASSEMBLIES 612460-1 ONLY WELDED TYPE FAIRLEADS 414733-1 MAY BE INSTALLED AS AN ALTERNATE TO 509067-1 R/L. WELD LOWER HALF OF 414733-1 ONLY, TO BASE OF FAIRLEAD SHEAVE HOUSING WITH 3/16 FILLET WELD.
12. FOR REEVING AND TERMINAL POURING INSTRUCTIONS OF PURCHASE CABLE, SEE NAVWEPS 51-5BAA-1 (MK7 MOD1 AG), NAVWEPS 51-5BBA-1 (MK7 MOD 2 AG) OR NAVWEPS 51-5BCA-1 (MK7 MOD 3 A.G).
13. ALL FAYING SURFACES SHALL HAVE AN APPLICATION OF ONE (1) COAT OF ZINC CHROMATE PRIMER (WET) IN ACCORDANCE WITH MPR 1201-2
14. TO FACILITATE ARRESTING ENGINE MAINTENANCE, CABLE TRUNKING INSTALLED BETWEEN ANCHOR DAMPER AND ARRESTING ENGINE MUST BE SPLIT. ANY BULKHEAD THAT SPLIT TRUNKING PASSES THROUGH MUST HAVE AN ACCESS HOLE LARGE ENOUGH TO PERMIT PASSAGE OF PURCHASE CABLE SOCKET AND POURED TERMINAL.
15. LINERS INSTALLED FOR ALIGNMENT OF SHEAVE ASSEMBLIES MUST NOT EXCEED A MINIMUM THICKNESS OF 1/8 INCH OR A MAXIMUM THICKNESS OF 3/4 INCH. THESE DIMENSIONS ALSO APPLY TO TAPERED LINERS.
16. FOUNDATION SURFACE AND LINER SURFACES FOR INSTALLATION OF SHEAVE ASSEMBLY MUST BE FLAT WITHIN .005 INCH TOTAL 75 % OF OUTER PERIPHERY AND 75 % OF INNER PERIPHERY MUST BE IN CONTACT WITH FOUNDATION WITH A MAXIMUM OPENING OF .010 PERMITTED ON THE REMAINING 25 %
17. ALL FASTENINGS FOR ANCHORAGE OF SHEAVE ASSEMBLIES MUST BE THRU BOLTS AS SHOWN IN DETAIL K, EXCEPT ANCHORAGE OF FLUSH TYPE THRU DECK SHEAVE ASSEMBLIES, WHICH MUST BE INSTALLED IN ACCORDANCE WITH NAEL (SI) DRAWING 612796 ALSO, BLIND BOLT HOLES ARE NOT PERMISSIBLE ANY DEVIATION FROM THESE REQUIREMENTS MUST BE APPROVED BY THE NAVAL AIR ENGINEERING LABORATORY (SI).
18. 1 DIA BOLTS SECURING SHEAVE ASSEMBLIES MUST BE TORQUED 350 TO 400 FT-LBS
19. THREAD DIMENSIONS AND DESIGNATIONS SHALL BE INTERPRETED IN ACCORDANCE WITH HANDBOOK H28 AND MIL-STD-9, RESPECTIVELY.
20. BOLTING REQUIREMENTS ARE TO BE IN ACCORDANCE WITH BUSHIPS INSTRUCTION 9110.54
21. THE SHEAVE ARRANGEMENTS FOR THE BARRICADE AND PENDANT POSITIONS SHOW THE MINIMUM NUMBER OF SHEAVES POSSIBLE AND IS THE OPTIMUM SHEAVE ARRANGEMENT FOR THE RESPECTIVE DRIVE SYSTEMS.
22. CABLE LEADS #1 AND #19 ONLY, MUST HAVE ELONGATED TRUNKING AT ENGINE TO PERMIT LATERAL TRAVEL OF PURCHASE CABLE AS CROSSHEAD MOVES FROM BATTERY POSITION TO FULL IN POSITION.
23. (C1) ALL SHIPS INSTALLING 28 INCH PITCH DIAMETER SHEAVES IN ACCORDANCE WITH MARK 7 ARRESTING GEAR SERVICE CHANGE NO. 230 SHALL NOT REPLACE EXISTING 24 INCH PITCH DIAMETER SHEAVES BETWEEN ARRESTING ENGINE AND ANCHOR DAMPER ASSEMBLIES.

REF

CLASSIFICATION OF CHARACTERISTICS
CRITICAL C .0 L
MAJOR M TO M
MINOR - ALL OTHER CHARACTERISTICS

UNLESS OTHERWISE SPECIFIED DIMENSIONS ARE IN INCHES TOLERANCES ON FRACTIONS ± DECIMALS ± .010

THESE DOCUMENTS ARE A PART OF THIS DRAWING

MPR 1201

REVISIONS				
SYM	ZONE	DESCRIPTION	DATE	APPROVED
A		SEE REVISION NOTICE CLABS 'R' CHANGE BARBELLA	2/4/66	S.B.
B		NRN CL 'R' CHG. ON DWG DELETED DETAIL 'L' REASON:- TO INSURE DISASSEMBLY FOR PROPER INSPECTION OF COMPLETE SHEAVE ASSY. IN VIEW F-F ADDED 'OR BE LESS THAN 30 INCHES' TO DIMENSION NOTE BETWEEN FAIRLEAD DECK SHEAVE CENTERS REASON: TO INSURE AT LEAST 3 LAYS OF CABLE BETWEEN SHEAVE CENTERS. BPM & RB	5/20/69	S.B.
C		CL 'R' CHG. (1) ADDED (2)(3)(4) REVISED. SEE REV. NOTICE. S/S E100	1/21/69	S.B.

ING SHOWS A TYPICAL INSTALLATION OF THE PENDANT AND BARRICADE
STEM FOR THE MARK 7 MOD 1, MARK 7 MOD 2 AND MARK 7 MOD 3
ENGINES. FOR DETAIL INFORMATION SEE REFERENCE DRAWINGS
BELOW.
ENT, SELECTION, QUANTITY AND TYPE OF ALL ITEMS SHALL BE
UNDER THE COGNIZANCE OF THE INSTALLING ACTIVITY TO SUIT
DITIONS SUBJECT TO APPROVAL OF NAEL (SI)
IRING TO BE IN ACCORDANCE WITH MS 33540.
SSEMBLIES INSTALLED IN LOCATIONS INACCESSIBLE FOR
ION SHALL BE EQUIPPED WITH 1/8 GREASE FITTINGS PIPED
DILY ACCESSIBLE LOCATION.
ALL DECK EDGE TYPE FAIRLEAD SHEAVE INSTALLATIONS SO THAT DRAIN
OCATED IN LOWEST POSITION, SO THAT DRAINING OF SHEAVE
Y MAY BE PIPED OVERBOARD
DECK TYPE SHEAVE ASSEMBLIES NOT PART OF SHEAVE DAMPER
ION MUST BE PIPED TO DRAIN OVERBOARD SEE VIEW F-F.
UNKS OF 2 1/2 DIAMETER PIPE, WITH SUPPORTS WHERE REQUIRED,
INSTALLED BETWEEN ALL FAIRLEAD SHEAVES. MATERIAL SHALL BE
D BY INSTALLING ACTIVITY
SSEMBLIES SHALL BE MOUNTED WITH 1 INCH DIAMETER HIGH
STEEL BOLTS HAVING A MINIMUM STRENGTH OF 120,000 UTS
XIMUM STRENGTH OF 142,000 UTS, (HEAT TREATED TO ROCKWELL
C24 - C32) FASTENINGS TO BE FURNISHED BY INSTALLING
AND SHALL BE EQUIVALENT TO NAEL (SI) (SOCKET HEAD SCREWS)
D DRAWING 1340, EXCEPT AS NOTED ABOVE
N OF ALL STRUCTURES SUPPORTING THE PARTS SHOWN ON THIS
ION MUST BE BASED ON THE 175,000 POUNDS NOMINAL
S STRENGTH OF 1 3/8 DIAMETER, 6 x 25 WIRE ROPE, SPEC
8, WR, ED 180° AROUND SHEAVE
RLEAD ASSEMBLIES TO SUIT DRIVE SYSTEM CABLE LEAD AND SHEAVE
ENT. WELD FAIRLEAD ASSEMBLIES TO DECK SHEAVES, THRU DECK
AND FAIRLEAD SHEAVES IF MOUNTING BOLTS OF FAIRLEAD
ES ARE OBSTRUCTED BY THE SHEAVE HOUSING BOLTS
EDGE FAIRLEAD SHEAVE ASSEMBLIES G124GO-1 ONLY, WELDED TYPE FAIRLEADS
MAY BE INSTALLED AS AN ALTERNATE TO 509067-1 R/L. WELD LOWER HALF
-1 ONLY, TO BASE OF FAIRLEAD SHEAVE HOUSING WITH 3/16 FILLET WELD.
ING AND TERMINAL POURING INSTRUCTIONS OF PURCHASE CABLE,
WEPS 51-5BAA-1 (MK 7 MOD 1 AG), NAVWEPS 51-5BBA-1 (MK 7 MOD 2 AG)
PS 51-5BCA-1 (MK 7 MOD 3 A.G).
S SURFACES SHALL HAVE AN APPLICATION OF ONE (1) COAT OF ZINC
PRIMER (WET) IN ACCORDANCE WITH MPR 1201-2
ATE ARRESTING ENGINE MAINTENANCE, CABLE TRUNKING INSTALLED
ANCHOR DAMPER AND ARRESTING ENGINE MUST BE SPLIT ANY
THAT SPLIT TRUNKING PASSES THROUGH MUST HAVE AN-
OLE LARGE ENOUGH TO PERMIT PASSAGE OF PURCHASE CABLE
AND POURED TERMINAL
STALLED FOR ALIGNMENT OF SHEAVE ASSEMBLIES MUST NOT
MINIMUM THICKNESS OF 1/8 INCH OR A MAXIMUM THICKNESS OF 3/4
SE DIMENSIONS ALSO APPLY TO TAPERED LINERS.
N SURFACE AND LINER SURFACES FOR INSTALLATION OF SHEAVE
Y MUST BE FLAT WITHIN .005 INCH TOTAL 75 % OF OUTER
Y AND 75 % OF INNER PERIPHERY MUST BE IN CONTACT WITH
U WITH A MAXIMUM OPENING OF .010 PERMITTED ON THE
G 25 %
NINGS FOR ANCHORAGE OF SHEAVE ASSEMBLIES MUST BE
TS AS SHOWN IN DETAIL K, EXCEPT ANCHORAGE OF FLUSH TYPE
K SHEAVE ASSEMBLIES, WHICH MUST BE INSTALLED IN
NCE WITH NAEL (SI) DRAWING 612796 ALSO, BLIND BOLT
RE NOT PERMISSIBLE ANY DEVIATION FROM THESE REQUIREMENTS
APPROVED BY THE NAVAL AIR ENGINEERING LABORATORY (SI).
SECURING SHEAVE ASSEMBLIES MUST BE TORQUED 350 TO 400 FT-LBS
DIMENSIONS AND DESIGNATIONS SHALL BE INTERPRETED IN
NCE WITH HANDBOOK H28 AND MIL-STD-9, RESPECTIVELY
REQUIREMENTS ARE TO BE IN ACCORDANCE WITH BUSHIPS
TION 9110 54
VE ARRANGEMENTS FOR THE BARRICADE AND PENDANT
NS SHOW THE MINIMUM NUMBER OF SHEAVES POSSIBLE
HE OPTIMUM SHEAVE ARRANGEMENT FOR THE
VE DRIVE SYSTEMS
EADS #1 AND #19 ONLY, MUST HAVE ELONGATED TRUNKING
NE TO PERMIT LATERAL TRAVEL OF PURCHASE CABLE AS
AD MOVES FROM BATTERY POSITION TO FULL IN POSITION.
IPS INSTALLING 28 INCH PITCH DIAMETER SHEAVES IN
ANCE WITH MARK 7 ARRESTING GEAR SERVICE CHANGE
SHALL NOT REPLACE EXISTING 24 INCH PITCH
TER SHEAVES BETWEEN ARRESTING ENGINE
NCHOR DAMPER ASSEMBLIES.

REFERENCE PLANS

		NAEL (SI) DRAWING NUMBER
1	ARRESTING ENGINE - INSTALLATION DATA - MK 7 MOD 1	02-61299
2	ARRESTING ENGINE - INSTALLATION DATA - MK 7 MOD 2	02-61276
3	ARRESTING ENGINE - INSTALLATION DATA - MK 7 MOD 3	02-61946
4	ARRESTING ENGINE - ASSEMBLY - MK 7 MOD 1 (WITHOUT COOLER)	51-61204
5	ARRESTING ENGINE - ASSEMBLY - MK 7 MOD 1 (WITH COOLER)	51-61509
6	ARRESTING ENGINE - ASSEMBLY - MK 7 MOD 2 (WITHOUT COOLER)	51-61629
7	ARRESTING ENGINE - ASSEMBLY - MK 7 MOD 2 (WITH COOLER)	51-61224
8	ARRESTING ENGINE - ASSEMBLY - MK 7 MOD 3 (WITHOUT COOLER)	50-61938
9	ARRESTING ENGINE - ASSEMBLY MK 7 MOD 3 (WITH COOLER)	50-61937
10	RETRACTABLE SHEAVE INSTALLATION - WRAPPING AND UNWRAPPING	612796
11	HORIZONTAL DECK SHEAVE - ASSEMBLY	612578
12	THRU DECK FAIRLEAD SHEAVE - ASSEMBLY	613522
13	THRU DECK FAIRLEAD SHEAVE - ASSEMBLY (WOOD DECK)	612455
14	THRU DECK FAIRLEAD SHEAVE ASSEMBLY (STEEL DECK)	612467
15	DECK EDGE FAIRLEAD SHEAVE - ASSEMBLY	612460
16	SHEAVE DAMPER - TYPICAL INSTALLATION - MK 7 MOD 1 AND MK 7 MOD 2	613008
17	SHEAVE DAMPER - TYPICAL INSTALLATION - MK 7 MOD 3	610203
18	SHEAVE DAMPER CABLE GUARD ENCLOSURE - TYPICAL INSTL MK 7 MOD 1 & 2	609953
19	SHEAVE DAMPER CABLE GUARD ENCLOSURE - TYPICAL INSTL MK 7 MOD 3	612991
20	ANCHOR DAMPER - INSTALLATION DATA - MK 7 MOD 2	608075
21	ANCHOR DAMPER - ASSEMBLY - MK 7 MOD 2	608007
22	ANCHOR DAMPER - INSTALLATION DATA - MK 7 MOD 3	613038
23	ANCHOR DAMPER ASSEMBLY - MK 7 MOD 3	610096
24	FAIRLEAD ASSEMBLY - WELDED TYPE	414733
25	FAIRLEAD ASSEMBLY - CAST TYPE	509067
26	FAIRLEAD ASSEMBLY - CAST TYPE	509071
27	CLEVIS SOCKET ASSEMBLY	407962
28	POURED TYPE TERMINAL	400791
29	LOCK RING	317894
30	WIRE ROPE (PURCHASE CABLE)	A9275-27
31	DECK PENDANT/BARRICADE EXTENSION PENDANT	507306
32	THRU DECK FAIRLEAD SHEAVE - ASSEMBLY (FOR CVA-31 AND CVA 38 ONLY)	612581

NEXT ASSEMBLY	QTY REQ'D	PART NUMBER	DESCRIPTION	STOCK	MATERIAL	SPECIFICATION	UNIT WT	ZONE

LIST OF MATERIALS

UNLESS OTHERWISE SPECIFIED DIMENSIONS ARE IN INCHES
TOLERANCES ON
FRACTIONS ± DECIMALS ± .010 ANGLES ± 1/2°

THE ITEMS LISTED ARE A PART OF THIS DRAWING
MPR 1201

MECHANICAL FINISH SURFACE ROUGHNESS IN MICROINCHES
✓ THIS SYMBOL EMBRACING THE SURFACE ROUGHNESS (IN MICROINCHES) REPRESENTS THE MAXIMUM ACCEPTABLE ROUGHNESS, AND MAY BE PRODUCED BY ANY MECHANICAL PROCESS
REF SPEC. MIL STD-10

DESIGNED MK 7 MOD 1, MK 7 MOD 2 & MK 7 MOD 3 FOR
REF

DRAWN	R. DE [illegible]	27 JAN 66
CHECKED	[illegible]	31 JAN 66
MATERIAL		
ANALYZED		
SUPERVISOR	F. KMECHAT	[illegible]
APPROVED	Gellant	DATE
APPROVED		DATE

NAVAL AIR ENGINEERING LABORATORY (SI)
NAVAL AIR ENGINEERING CENTER PHILA., PA. 19112

TITLE
DRIVE SYSTEM
ARRESTING GEAR
TYPICAL INSTALLATION
1 3/8 DIA CABLE 28 PD SHEAVES

CODE IDENT NO 10020 — SIZE H — DRAWING NO. 612792
SCALE 1/2" = 1'0" & AS NOTED — SHEET

CLASSIFICATION OF CHARACTERISTICS
CRITICAL C TO C
MAJOR M TO M
MINOR - ALL OTHER CHARACTERISTICS

250, 251, 252

FIGURE 7.

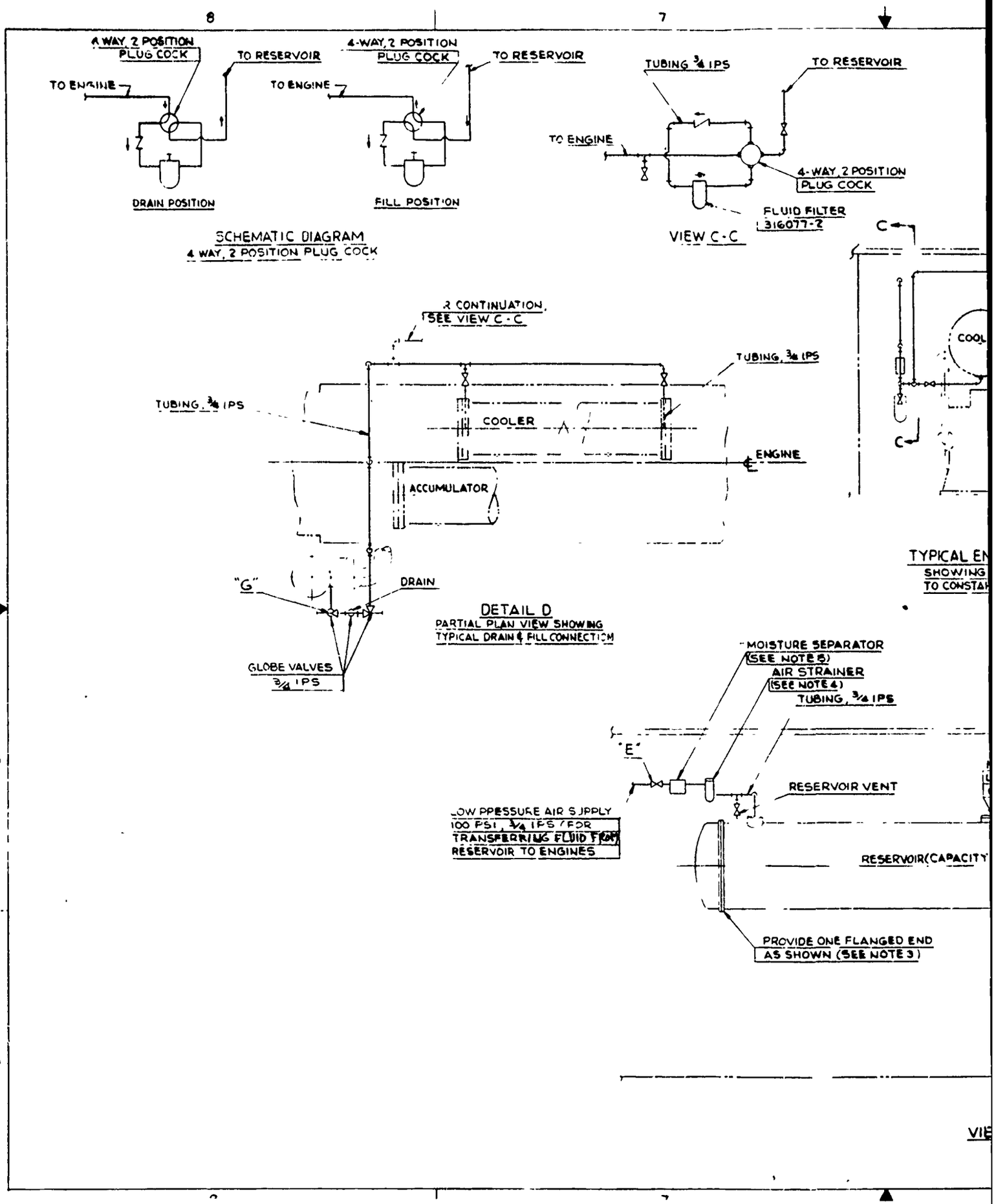
4 WAY, 2 POSITION PLUG COCK
TO RESERVOIR
TO ENGINE
DRAIN POSITION
4-WAY, 2 POSITION PLUG COCK
TO RESERVOIR
TO ENGINE
FILL POSITION
SCHEMATIC DIAGRAM
4 WAY, 2 POSITION PLUG COCK
TUBING ¾ IPS
TO RESERVOIR
TO ENGINE
4-WAY, 2 POSITION PLUG COCK
FLUID FILTER
316077-2
VIEW C-C
CONTINUATION, SEE VIEW C-C
TUBING, ¾ IPS
TUBING, ¾ IPS
COOLER
ENGINE
ACCUMULATOR
"G"
DRAIN
GLOBE VALVES ¾ IPS
DETAIL D
PARTIAL PLAN VIEW SHOWING TYPICAL DRAIN & FILL CONNECTION
MOISTURE SEPARATOR (SEE NOTE 5)
AIR STRAINER (SEE NOTE 4)
TUBING, ¾ IPS
"E"
RESERVOIR VENT
LOW PRESSURE AIR SUPPLY 100 PSI, ¾ IPS FOR TRANSFERRING FLUID FROM RESERVOIR TO ENGINES
RESERVOIR (CAPACITY
PROVIDE ONE FLANGED END AS SHOWN (SEE NOTE 3)
TYPICAL EN
SHOWING
TO CONSTAN
COOL
VIE

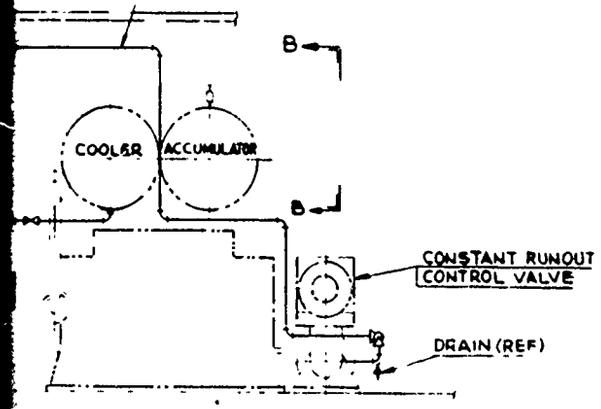

YPICAL END VIEW OF AG ENGINES
SHOWING DRAIN & FILL CONNECTION
TO CONSTANT RUNOUT CONTROL VALVE

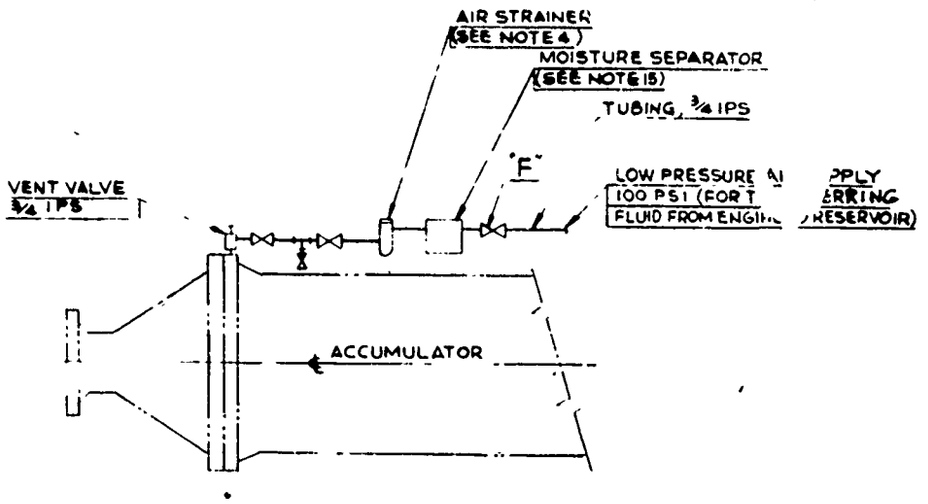

VIEW B-B
TYPICAL ARRGT OF AIR CONNECTION
TO ACCUMULATOR ON ARRESTING ENGINE

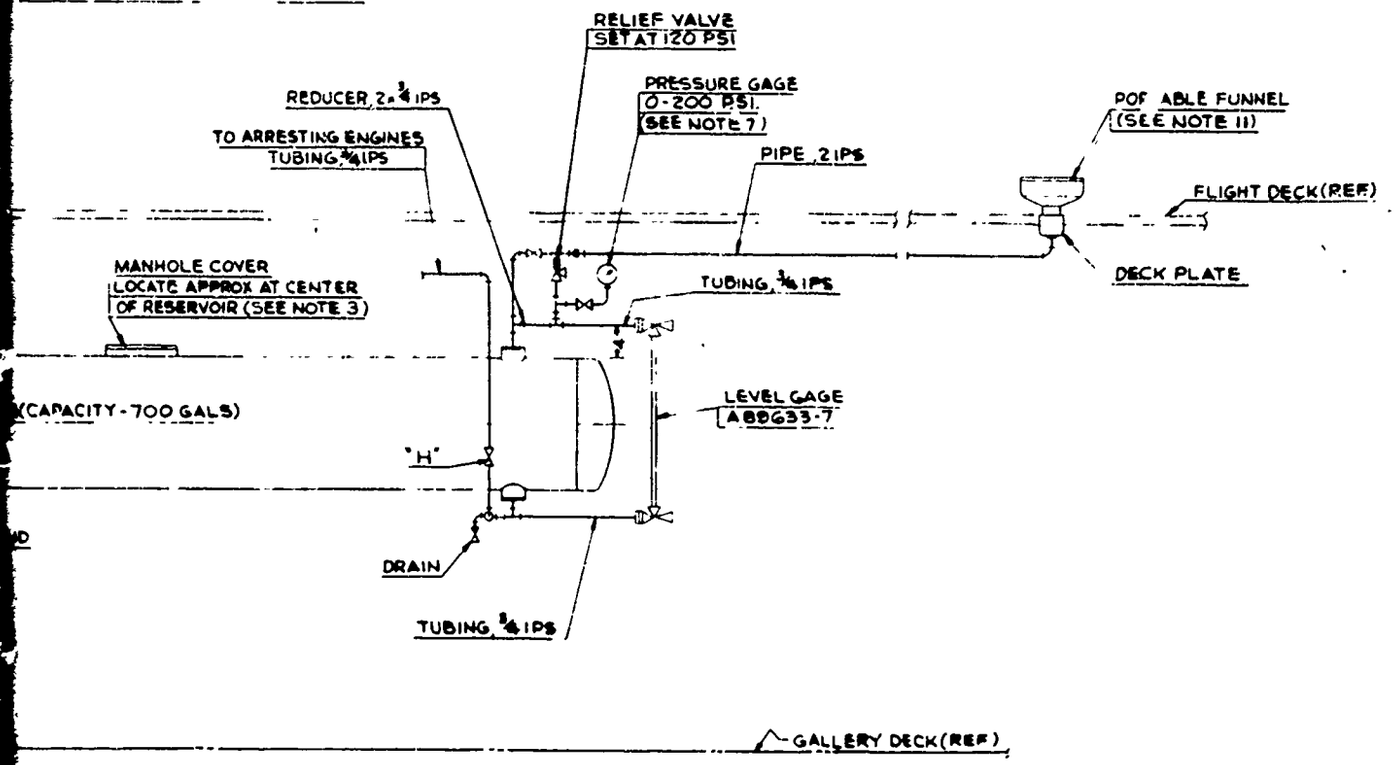

VIEW A - A

616111

2

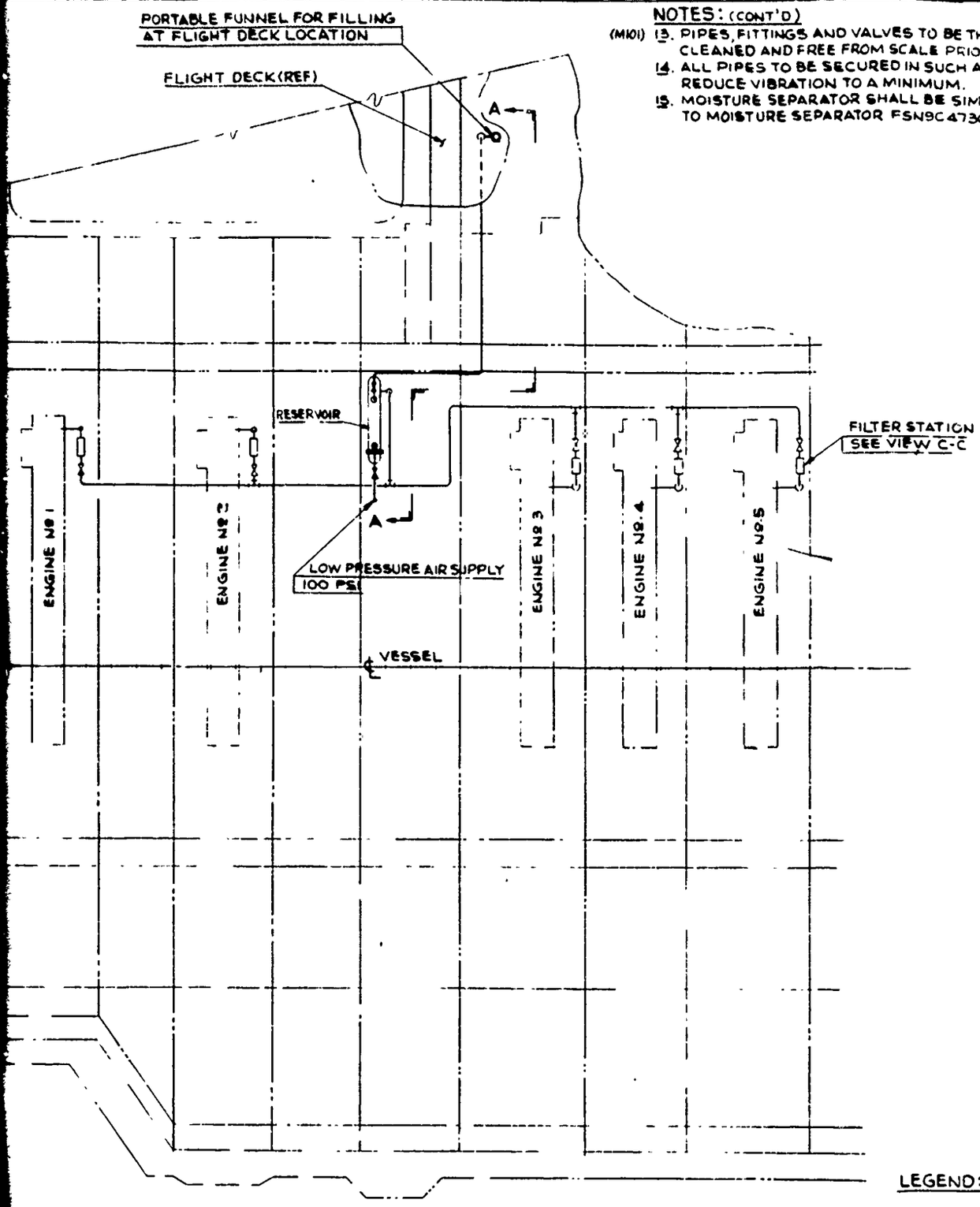

NOTES: (CONT'D)

(M101) 13. PIPES, FITTINGS AND VALVES TO BE THOROUGHLY CLEANED AND FREE FROM SCALE PRIOR TO INSTALLATION.

14. ALL PIPES TO BE SECURED IN SUCH A MANNER AS TO REDUCE VIBRATION TO A MINIMUM.

15. MOISTURE SEPARATOR SHALL BE SIMILAR OR EQUIVALENT TO MOISTURE SEPARATOR FSN9C4730-277-8901

NOTES:

1. THIS DRA
PROVIDE
THE TRA
ENGINE
A TO DR
RESE
THE
(1) CHE
(2) WIT
ACC
VAL
(3) OPE
(4) OPE
PLU
(5) OPE
(6) AFT
FRO
B TO FILL
FOLLOV
(1) CLOS
(2) CHA
RET
(3) OPE
OPE
(4) OPE
AND
(5) VEN
APP
(6) CLO
VEN
(7) REM
TO
2 A SCHEMA
SHALL BE
3 THE MANI
INTERIOR
ACCESS
4 AIR STRA
SHOWN O
CONTROL
FILTER EL
SIZE PAR
(M102) 5 ALL LOW
SHALL W
6 THE FLU
AS CLOSE
7 THE INSTA
GAUGE W
LOCATIO
OPERATI
OPERATI
(M103) 8 AIR LINES
DIRECTION
VALVE ON
BLACK IN
(M104) 9 CONSTRUC
A CORROSI
WELD W
B CORROSI
OR FS34
MIL-E
(OUTSID
10 EXCEPT FO
AND FITTI
11. PROVIDE A
OPENING
THE ARRE
12. THE INSTA
SHALL FL
THIS DRAW
STRAPS

LEGEND:

GLOBE VALVE

CHECK VALVE

RELIEF VALVE

4 WAY, 2 POSITION PLUG COCK

FILTER

PLAN VIEW - GALLERY DECK
SHOWING ARRESTING ENGINE INSTALLATION
DRAIN AND FILL ARRANGEMENT
(SEE NOTE 6)

CLASSIFICATION
CRITICAL — C TO
MAJOR — M10
MINOR — ALL OT

THOROUGHLY
RIOR TO INSTALLATION.
H A MANNER AS TO
.
IMILAR OR EQUIVALENT
730-277-8901

ON
C

ND:

G LOBE VALVE

CHECK VALVE

IEF VALVE

4 WAY, 2 POSITION PLUG COCK

FILTER

NOTES:

1. THIS DRAWING SHOWS A TYPICAL PIPING ARRANGEMENT WHICH PROVIDES A FLUID FILL SYSTEM FROM THE FLIGHT DECK AND THE TRANSFER DRAIN AND FILL SYSTEM FOR ARRESTING ENGINE FLUID
   A. TO DRAIN OR TRANSFER THE FLUID FROM THE ENGINE TO THE RESERVOIR AS SHOWN FOR A TYPICAL OPERATION, THE FOLLOWING STEPS ARE TO BE TAKEN:
      (1) CHECK FLUID LEVEL IN RESERVOIR
      (2) WITH ENGINE FULLY RETRACTED, BLOW DOWN ENGINE ACCUMULATOR PRESSURE TO 150 PSI AND BLOCK RETRACTING VALVE IN OPEN POSITION.
      (3) OPEN RESERVOIR VENT AND ASSURE THAT VALVE "E" IS CLOSED
      (4) OPEN VALVES "F" AND "G" THEN, OPEN 4-WAY, 2 POSITION PLUG COCK TO DRAINING POSITION
      (5) OPEN VALVE "H" FLUID WILL NOW FLOW THRU FILTER TO RESERVOIR
      (6) AFTER DESIRED LEVEL OF FLUID IS DRAINED INTO RESERVOIR FROM ENGINE, CLOSE VALVES "G" AND "H"
   B. TO FILL OR RETURN FLUID TO THE ARRESTING ENGINE, THE FOLLOWING STEPS ARE TO BE TAKEN:
      (1) CLOSE RESERVOIR VENT AND ASSURE THAT VALVE "F" IS CLOSED
      (2) CHARGE ENGINE ACCUMULATOR TO 150 PSI AND BLOCK OPEN RETRACTING VALVE OPEN VALVE "H"
      (3) OPEN 4 WAY 2 POSITION PLUG COCK TO FILLING POSITION OPEN VALVE "G" AT THE ENGINE
      (4) OPEN LOW PRESSURE AIR SUPPLY VALVE "E" AT RESERVOIR AND FILL ENGINE TO DESIRED LEVEL
      (5) VENT AIR FROM SYSTEM CLOSE VENT VALVES WHEN FLUID APPEARS AT VENTS
      (6) CLOSE TRANSFER VALVE "G" WHEN SYSTEM IS COMPLETELY VENTED OF AIR
      (7) REMOVE BLOCK FROM RETRACTING VALVE ALLOWING VALVE TO CLOSE
2. A SCHEMATIC DIAGRAM WITH GENERAL OPERATING INSTRUCTIONS SHALL BE PROVIDED IN EACH ARRESTING ENGINE COMPARTMENT
3. THE MANHOLE COVER IS PROVIDED TO ENABLE INSPECTION OF INTERIOR OF RESERVOIR FLANGED END OF TANK IS PROVIDED FOR ACCESS AND TO FACILITATE CLEANING
4. AIR STRAINER SHALL BE SIMILAR OR EQUIVALENT TO STRAINER SHOWN ON NAVSHIPS DWG NO. 5132 54823-2706, SHIPS PARTS CONTROL CENTER PART NO 14730-369-5053 EXCEPT THAT THE FILTER ELEMENT SHALL BE CAPABLE OF REMOVING MINIMUM SIZE PARTICLES OF 125 MICRONS
(M102) 5. ALL LOW PRESSURE HARDWARE PIPING, VALVES RESERVOIR ETC SHALL WITHSTAND A MAXIMUM HYDROSTATIC TEST OF 200 PSI
6. THE FLUID STOWAGE SYSTEM SHOULD BE CENTRALLY LOCATED AS CLOSE AS POSSIBLE TO ARRESTING ENGINE COMPARTMENTS
7. THE INSTALLING ACTIVITY SHALL PROVIDE AN AIR PRESSURE GAUGE WITH A RANGE OF 0 TO 200 PSI AT AN APPROPRIATE LOCATION, CLOSE TO THE STOWAGE TANK WHERE OPERATING PERSONNEL CAN ASCERTAIN PROPER OPERATING PRESSURE.
(M103) 8. AIR LINES SHALL BE MARKED "ALP" (AIR LOW PRESSURE) AND WITH DIRECTIONAL FLOW ARROWS IDENTIFICATION TO BE PLACED NEAR VALVE ON PRESSURE SIDE WHERE POSSIBLE PAINT SHALL BE BLACK IN ACCORDANCE WITH MIL-P-15149
(M104) 9. CONSTRUCTION AND MATERIAL OF TANK TO BE AS FOLLOWS
   A. CORROSION RESISTING STEEL PLATE PER QQ-S-766, CLASS 347 WELD WITH ELECTRODE MIL-E-22200/2A, TYPE MIL-347-15 OR-16
   B. CORROSION RESISTING CLAD STEEL PLATE PER QQ-S-682, CLASS FS32 OR FS347 CLAD ON INSIDE ONLY WELD CLAD SIDE WITH ELECTRODE MIL-E-22200/2A, TYPE MIL-347-15 OR-16 WELD UNCLAD SIDE (OUTSIDE) WITH ELECTRODE MIL-E-22200/1, TYPE MIL-7018
10. EXCEPT FOR HIGH PRESSURE ITEMS CALLED OUT, ALL AIR SUPPLY PIPING AND FITTINGS TO BE CORROSION RESISTANT (COPPER, STN STEEL OR BRASS)
11. PROVIDE A WATERTIGHT COVER ON THE FLIGHT DECK FOR THE FUNNEL OPENING WHEN NOT IN USE, THE PORTABLE FUNNEL CAN BE STORED IN THE ARRESTING GEAR STORE ROOM
12. THE INSTALLING ACTIVITY, UNDER THE COGNIZANCE OF NAVSHIPS, SHALL FURNISH ALL EQUIPMENT OR MATERIAL FOR THIS INSTALLATION THIS DRAWING DOES NOT DESIGNATE ALL POSSIBLE PIPE, ELBOWS, STRAPS OR HANGERS THAT MAY BE REQUIRED

REVISIONS				
ZONE	SYM	REVISION	DATE	APPROVED

NEXT ASSEMBLY	QTY REQD	PART NUMBER	DESCRIPTION	STOCK	MATERIAL	SPECIFICATION	UNIT WT	TOTAL

UNLESS OTHERWISE SPECIFIED DIMENSIONS ARE IN INCHES
TOLERANCES ON FRACTIONS DECIMALS ANGLES
± — ±.010 ±1/2°
THESE DOCUMENTS ALSO ARE A PART OF THIS DRAWING

MECHANICAL FINISH SURFACE ROUGHNESS IN MICROINCHES
SURFACE ROUGHNESS IN ACCORDANCE WITH ASA B46

DRAWN C.M. BRUFF 9 JAN 63
MILITARY
MATERIAL —
ANALYST —
LABORATORY
APPROVED
APPROVED DATE 12/1/63
DESIGNED FOR MK 7 MOD 3

ENGINEERING DEPARTMENT (81)
NAVAL AIR ENGINEERING CENTER PHILA PA 19112

TITLE
DRAIN & FILL ARRANGEMENT
MK 7 MOD 3 ARRESTING ENGINE

SIZE H | CODE IDENT NO 80020 | DRAWING NO 616111
SCALE NONE | SHEET

CLASSIFICATION OF CHARACTERISTICS
CRITICAL — C TO C
MAJOR M101 TO M104
MINOR — ALL OTHER CHARACTERISTICS

616111

FIGURE 8

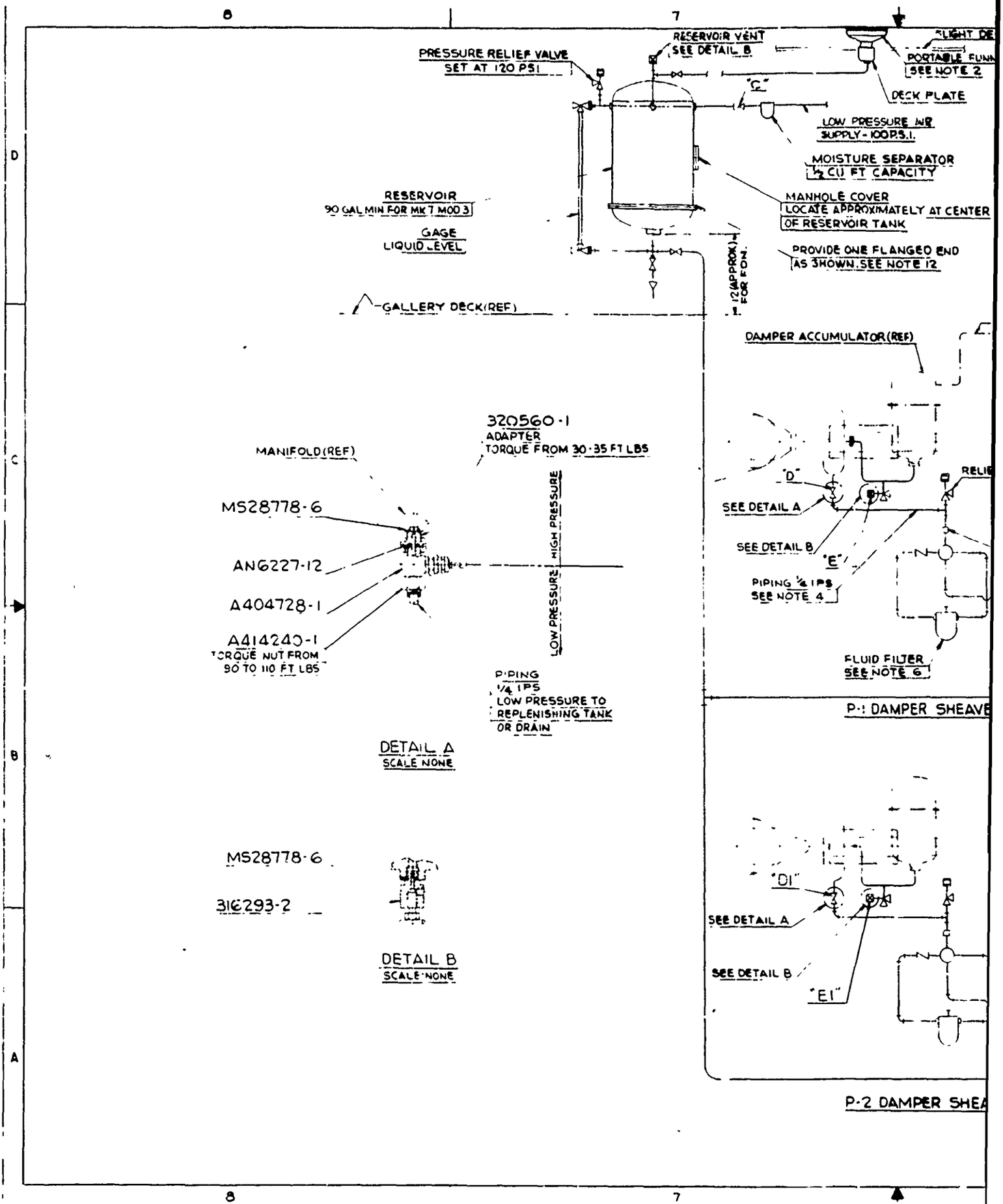
PRESSURE RELIEF VALVE
SET AT 120 PSI
RESERVOIR VENT
SEE DETAIL B
PORTABLE FUNN
SEE NOTE 2
DECK PLATE
"C"
LOW PRESSURE WR
SUPPLY - 100 P.S.I.
MOISTURE SEPARATOR
½ CU FT CAPACITY
RESERVOIR
90 GAL MIN FOR MK 7 MOD 3
GAGE
LIQUID LEVEL
MANHOLE COVER
LOCATE APPROXIMATELY AT CENTER
OF RESERVOIR TANK
PROVIDE ONE FLANGED END
AS SHOWN. SEE NOTE 12
12 (APPROX) FOR FDN.
GALLERY DECK (REF)
DAMPER ACCUMULATOR (REF)
320560-1
ADAPTER
TORQUE FROM 30-35 FT LBS
MANIFOLD (REF)
MS28778-6
AN6227-12
A404728-1
A414240-1
TORQUE NUT FROM
90 TO 110 FT LBS
HIGH PRESSURE
LOW PRESSURE
PIPING
¼ IPS
LOW PRESSURE TO
REPLENISHING TANK
OR DRAIN
DETAIL A
SCALE NONE
"D"
SEE DETAIL A
SEE DETAIL B
"E"
PIPING ¼ IPS
SEE NOTE 4
FLUID FILTER
SEE NOTE 6
P-1 DAMPER SHEAVE
MS28778-6
316293-2
DETAIL B
SCALE NONE
"D1"
SEE DETAIL A
SEE DETAIL B
"E1"
P-2 DAMPER SHEA

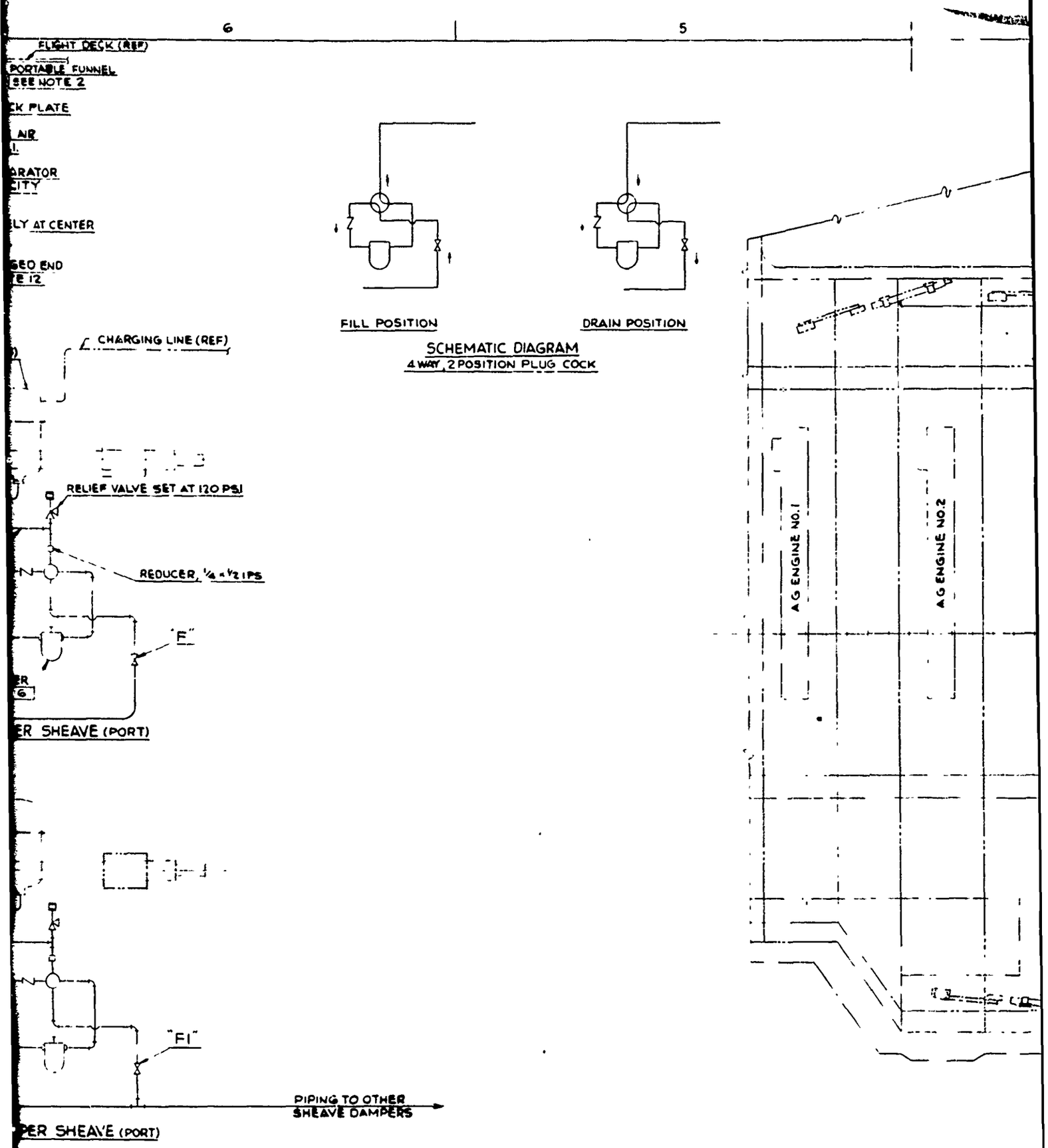
6
5
FLIGHT DECK (REF)
PORTABLE FUNNEL
SEE NOTE 2
CK PLATE
NR
ARATOR
CITY
LY AT CENTER
GED END
E 12
CHARGING LINE (REF)
RELIEF VALVE SET AT 120 PSI
REDUCER, 1/4 x 1/2 IPS
"F"
ER SHEAVE (PORT)
"F1"
PIPING TO OTHER SHEAVE DAMPERS
PER SHEAVE (PORT)
FILL POSITION
DRAIN POSITION
SCHEMATIC DIAGRAM
4 WAY, 2 POSITION PLUG COCK
A.G. ENGINE NO.1
A.G. ENGINE NO.2
616109

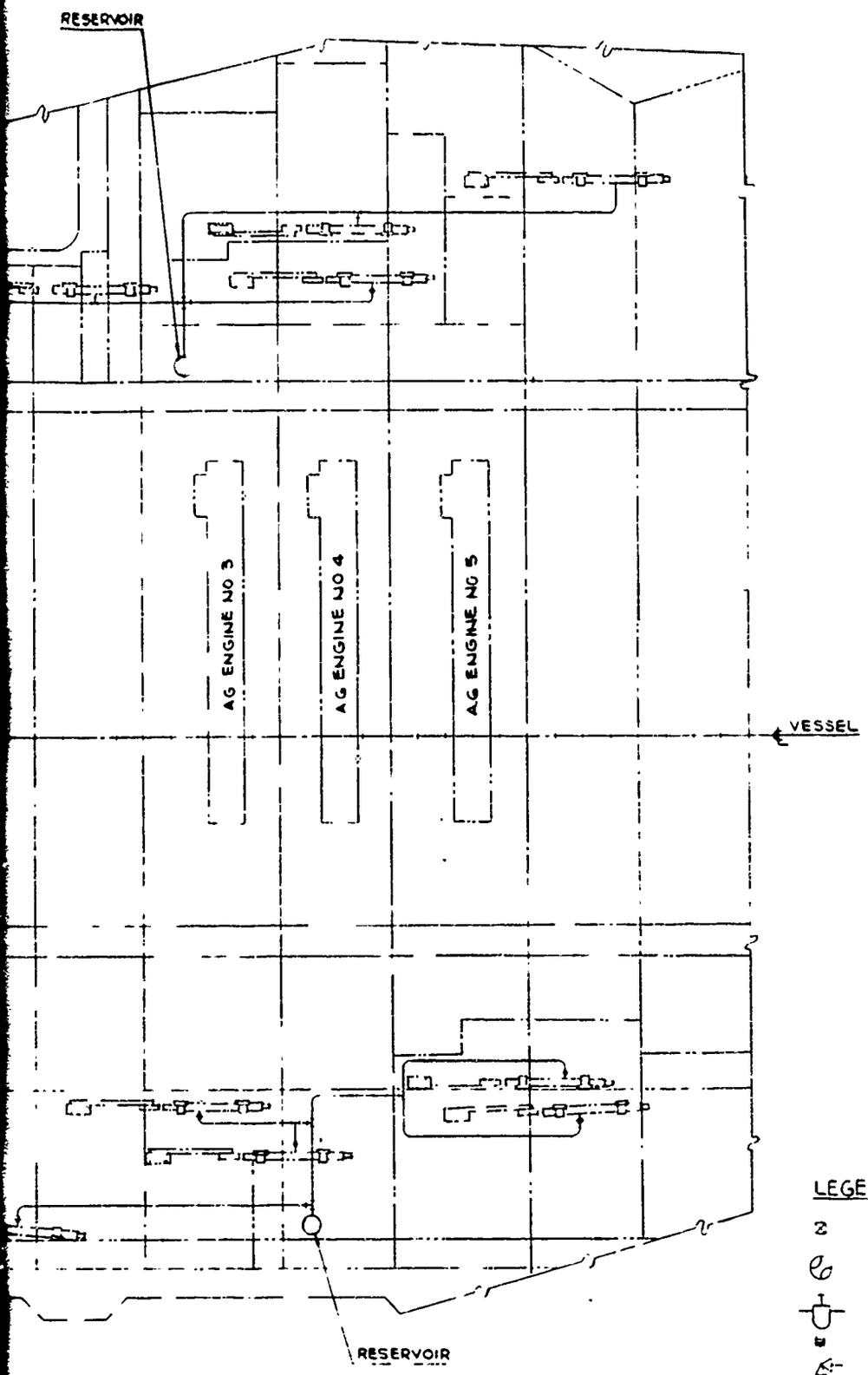

LEGEND:

- BLEED VALVE
- 4 WAY, 2 POSITION PLUG COCK
- FILTER
- RELIEF VALVE
- CHECK VALVE
- GLOBE VALVE

PLAN VIEW - GALLERY DECK
SHOWING SHEAVE DAMPER INSTALLATION DRAIN & FILL ARRANGEMENT
SEE NOTE 8

NOTES

1. THIS DRAWING SH
FLIGHT DECK AND
DAMPER SHEAV
TO A COMMON RE
A. TO DRAIN FLU
AS SHOWN FO
ARE TO BE T
(1) CHECK FLU
(2) BLOWDOWN
(3) OPEN RES
(4) OPEN 4WAY
AND VALVE
RESERVOI
(5) TRAPPED
CONTAINE
(6) AFTER DES
VALVES "C"
B. TO FILL OR RE
STEPS ARE TO
(1) CLOSE RES
(2) VENT ACCU
PLUG COCK
DESIRED LE
(3) CLOSE VAL
BEFORE AC
2. PROVIDE A WATE
OPENING, WHEN
N THE ARRESTI
3. VALVE A404725
MANIFOLD SHA
PRESSURE OF 5
PERMANENT DE
4. PIPING SYSTEM
RESISTANT (CO
COMPLY WITH M
PIPING SHALL
5. ALL MATERIALS
SHALL BE FURN
6. ALL FILTERS S
WITH FLUID MI
PRESSURE OF
DISC TYPE, FU
AND CAPABLE
MIN SIZE OF
7. A SCHEMATIC
SHALL BE PRO
8. THE FLUID DRA
LOCATED AMON
(M101) 9. CONSTRUCTION
A CORROSION
WELD WITH E
B CORROSION
FS 347 CLAD
MIL-E-22200
(OUTSIDE) WIT
10. THE INSTALLING
WITH A RANGE OF
TO THE STOWAGE
PROPER OPERA
(M102) 11. ALL LOW PRESS
WITHSTAND A MA
12. THE MANHOLE
TANK FLANGED
CLEANING
(M103) 13. PIPES, FITTINGS
FROM SCALE
(M104) 14. AIR LINES SHA
DIRECTIONAL
VALVE ON PRE
IN ACCORDANC

CLASSIFICATION	
CRITICAL - C	TO
MAJOR	M101
MINOR	ALL OTH

4 3

NOTES

1. THIS DRAWING SHOWS [illegible] FLIGHT DECK AND A FLUID DRAIN AND FILL SYSTEM [illegible] DAMPER SHEAVE INSTALLATION. ALL ACCUMULATORS ARE CONNECTED TO A COMMON RESERVOIR. PORT & STBD SIDES HAVE INDIVIDUAL RESERVOIRS.
   A. TO DR. IN FLUID FROM THE DAMPER SHEAVE ASSEMBLY PORT AS SHOWN FOR A TYPICAL OPERATION, THE FOLLOWING STEPS ARE TO BE TAKEN:
      (1) CHECK FLUID LEVEL IN RESERVOIR.
      (2) BLOW DOWN PRESSURE IN ACCUMULATOR TO 100 PSI APPROX
      (3) OPEN RESERVOIR VENT AND ASSURE THAT VALVE 'C' IS CLOSED
      (4) OPEN 4 WAY, 2 POSITION PLUG COCK TO DRAINING POSITION AND VALVE 'F'; FLUID WILL NOW FLOW THRU FILTER TO RESERVOIR EXCEPT FLUID TRAPPED IN MANIFOLDS.
      (5) TRAPPED MANIFOLD FLUID CAN BE DRAINED INTO A CONTAINER FROM VALVE 'E' IF NECESSARY.
      (6) AFTER DESIRED LEVEL OF FLUID IS DRAINED INTO THE RESERVOIR VALVES 'C' AND 'F' CAN BE CLOSED.
   B. TO FILL OR RETURN FLUID TO THE ACCUMULATORS, THE FOLLOWING STEPS ARE TO BE TAKEN.
      (1) CLOSE RESERVOIR VENT
      (2) VENT ACCUMULATOR, OPEN VALVES 'C' AND 'F' AND 4 WAY 2 POSITION PLUG COCK TO FILLING POSITION UNTIL THE FLUID REACHES DESIRED LEVEL IN ACCUMULATORS
      (3) CLOSE VALVES 'C' AND 'F'. CAUTION: VALVE 'D' MUST BE CLOSED BEFORE ACCUMULATORS ARE CHARGED TO OPERATING PRESSURE
2. PROVIDE A WATER-TIGHT COVER ON THE FLIGHT DECK FOR THE FUNNEL OPENING. WHEN NOT IN USE, THE PORTABLE FUNNEL CAN BE STORED IN THE ARRESTING GEAR STORE ROOM.
3. VALVE A404728-IN AND COMPONENTS CONNECTING IT TO MANIFOLD SHALL WITHSTAND A MAXIMUM HYDROSTATIC TEST PRESSURE OF 5000 PSI FOR 15 MINUTES WITHOUT LEAKAGE OR PERMANENT DEFORMATION.
4. PIPING SYSTEM MATERIALS AND RESERVOIR TO BE CORROSION RESISTANT (COPPER, CU-NI, ST STEEL OR BRONZE) AND SHALL COMPLY WITH MIL-STD-777 UNLESS OTHERWISE SPECIFIED. PIPING SHALL BE 1/2 IPS OR EQUIVALENT.
5. ALL MATERIALS NEEDED TO INSTALL STOWAGE SYSTEM SHALL BE FURNISHED BY THE INSTALLING ACTIVITY
6. ALL FILTERS SHALL BE SUITABLE IN ALL RESPECTS FOR USE WITH FLUID MIL-H-5559, ETHYLENE GLYCOL, AT A WORKING PRESSURE OF 125 PSI. FILTER ELEMENT SHALL BE METAL DISC TYPE, FUNCTIONING BY EDGE FILTRATION PRINCIPLE AND CAPABLE OF REMOVING FOREIGN PARTICLES OF A MIN SIZE OF 125 MICRONS
7. A SCHEMATIC DIAGRAM WITH GENERAL OPERATING INSTRUCTIONS, SHALL BE PROVIDED IN EACH DAMPER SHEAVE COMPARTMENT
8. THE FLUID DRAIN AND FILL RESERVOIR SHOULD BE CENTRALLY LOCATED AMONG ALL SHEAVE DAMPER INSTALLATIONS
(M101) 9. CONSTRUCTION AND MATERIAL OF TANK TO BE AS FOLLOWS:
   A. CORROSION RESISTING STEEL PLATE PER SPEC QQ-S-766 CL 347 WELD WITH ELECTRODE MIL-E-22200/2A TYPE MIL-347-15 OR -16.
   B. CORROSION RESISTING CLAD STEEL PLATE QQ-S-682 CL FS 32 OR FS 347 CLAD ON INSIDE ONLY, WELD CLAD SIDE WITH ELECTRODE MIL-E-22200/2A TYPE MIL-347-15 OR -16 WELD NOCLAD SIDE (OUTSIDE) WITH ELECTRODE MIL-E-22200/1, TYPE MIL-7018
10. THE INSTALLING ACTIVITY SHALL PROVIDE AN AIR PRESSURE GAUGE WITH A RANGE OF 0 TO 200 PSI AT AN APPROPRIATE LOCATION CLOSE TO THE STOWAGE TANK WHERE OPERATING PERSONNEL CAN ASCERTAIN PROPER OPERATING PRESSURE.
(M102) 11. ALL LOW PRESSURE HARDWARE, FITTING, VALVES, RESERVOIR ETC SHALL WITHSTAND A MAXIMUM HYDROSTATIC TEST PRESSURE OF 200 PSI
12. THE MANHOLE COVER IS PROVIDED TO ENABLE INSPECTION OF INTERIOR OF TANK. FLANGED END OF TANK IS PROVIDED FOR ACCESS AND TO FACILITATE CLEANING
(M103) 13. PIPES, FITTINGS AND VALVES TO BE THOROUGHLY CLEANED AND FREE FROM SCALE PRIOR TO INSTALLATION
(M104) 14. AIR LINES SHALL BE MARKED "AIR" (AIR LOW PRESSURE) AND IN THE DIRECTIONAL FLOW ARROW IDENTIFICATION TO BE PLACED NEAR VALVE ON PRESSURE SIDE WHERE POSSIBLE. PAINT SHALL BE BLACK IN ACCORDANCE WITH MIL-P-15549

PLUG COCK

CLASSIFICATION OF CHARACTERISTICS	
CRITICAL	NONE
MAJOR	M101 TO M104
MINOR	ALL OTHER CHARACTERISTICS

ENGINEERING DEPARTMENT (B1)
NAVAL AIR ENGINEERING CENTER PHILA PA 19112

TITLE
DRAIN AND FILL ARRANGEMENT
DAMPER SHEAVE FLUID
MATVOL 3 ARRESTING ENGINE

DRAWING NO 616109
SIZE H
CODE IDENT NO 80020
SHEET

616109

FIGURE 9

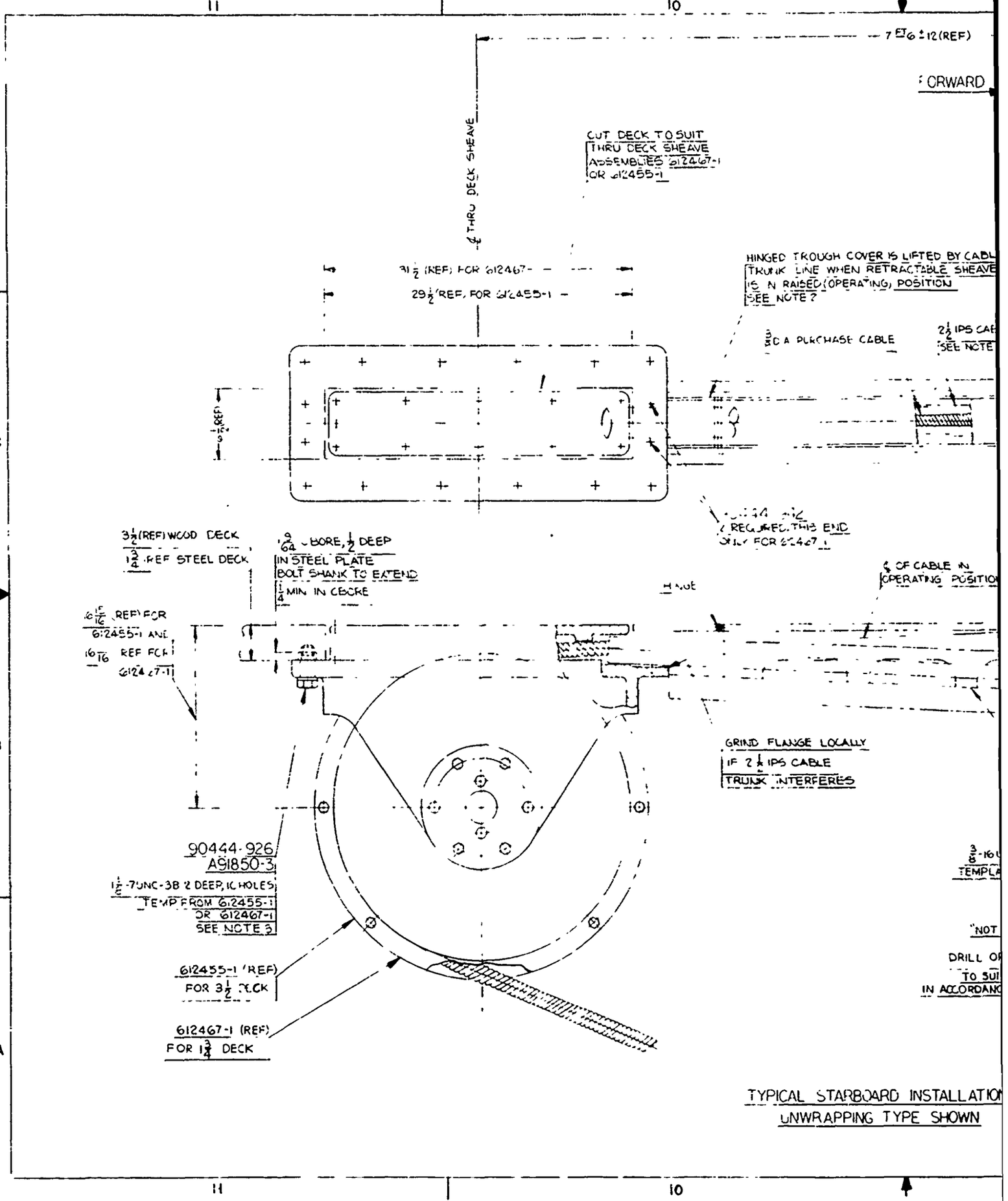
11
10
D
C
B
A
7 ET 6 ± 12 (REF)
FORWARD
℄ THRU DECK SHEAVE
CUT DECK TO SUIT
THRU DECK SHEAVE
ASSEMBLIES 612467-1
OR 612455-1
31 1/2 (REF) FOR 612467-
29 1/2 (REF) FOR 612455-1
HINGED TROUGH COVER IS LIFTED BY CABL
TRUNK LINE WHEN RETRACTABLE SHEAVE
IS IN RAISED (OPERATING) POSITION
SEE NOTE 7
3/8 D A PURCHASE CABLE
2 1/2 IPS CAB
SEE NOTE
3 1/2 (REF) WOOD DECK
1 3/4 (REF) STEEL DECK
9/64 BORE, 1/2 DEEP
IN STEEL PLATE
BOLT SHANK TO EXTEND
1/4 MIN IN CBORE
REQUIRED THIS END
ONLY FOR 612467-1
℄ OF CABLE IN
OPERATING POSITION
H NUT
16 15/16 (REF) FOR
612455-1 AND
16 7/16 REF FOR
612467-1
GRIND FLANGE LOCALLY
IF 2 1/2 IPS CABLE
TRUNK INTERFERES
90444-926
AS1850-3
1 1/2-7UNC-3B 2 DEEP, 16 HOLES
TEMP FROM 612455-1
OR 612467-1
SEE NOTE 3
612455-1 (REF)
FOR 3 1/2 DECK
612467-1 (REF)
FOR 1 3/4 DECK
3/8-16
TEMPLA
"NOT
DRILL O
TO SUI
IN ACCORDANC
TYPICAL STARBOARD INSTALLATION
UNWRAPPING TYPE SHOWN

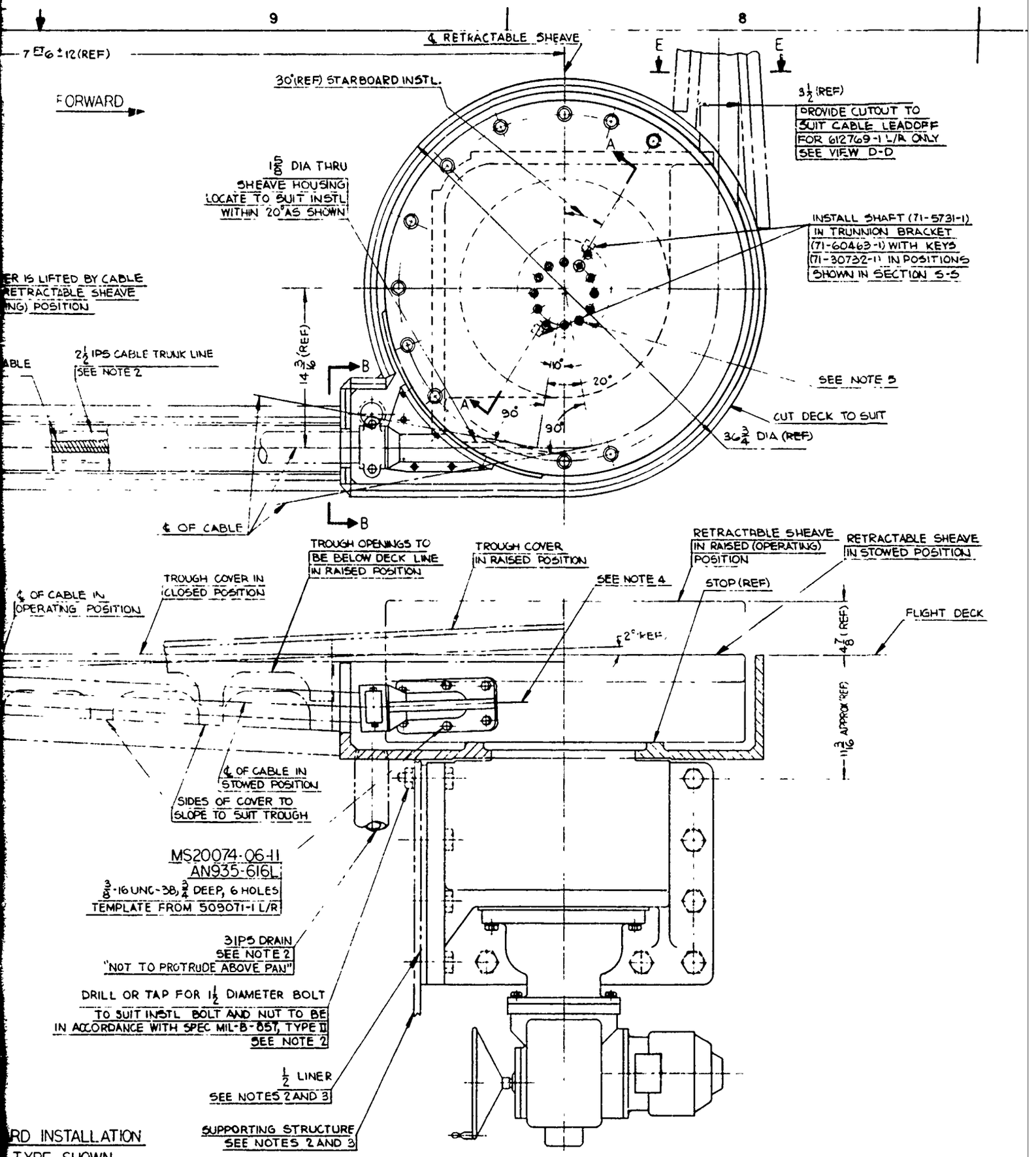
9
8
7 ET 6 ± 12 (REF)
℄ RETRACTABLE SHEAVE
E
E
30° (REF) STARBOARD INSTL.
FORWARD
3½ (REF)
PROVIDE CUTOUT TO SUIT CABLE LEADOFF FOR 612769-1 L/R ONLY SEE VIEW D-D
1⅝ DIA THRU SHEAVE HOUSING LOCATE TO SUIT INSTL WITHIN 20° AS SHOWN
INSTALL SHAFT (71-5731-1) IN TRUNNION BRACKET (71-60463-1) WITH KEYS (71-30732-1) IN POSITIONS SHOWN IN SECTION S-S
ER IS LIFTED BY CABLE
RETRACTABLE SHEAVE
NG) POSITION
2½ IPS CABLE TRUNK LINE
SEE NOTE 2
ABLE
14 3/16 (REF)
B
A
10°
20°
90°
90°
SEE NOTE 5
CUT DECK TO SUIT
36¾ DIA (REF)
℄ OF CABLE
B
TROUGH OPENINGS TO BE BELOW DECK LINE IN RAISED POSITION
TROUGH COVER IN RAISED POSITION
RETRACTABLE SHEAVE IN RAISED (OPERATING) POSITION
RETRACTABLE SHEAVE IN STOWED POSITION
℄ OF CABLE IN OPERATING POSITION
TROUGH COVER IN CLOSED POSITION
SEE NOTE 4
STOP (REF)
FLIGHT DECK
2° REF.
4⅞ (REF)
11 3/16 APPROX (REF)
℄ OF CABLE IN STOWED POSITION
SIDES OF COVER TO SLOPE TO SUIT TROUGH
MS20074-06-11
AN935-616L
⅜-16 UNC-3B, ¾ DEEP, 6 HOLES
TEMPLATE FROM 509071-1 L/R
3 IPS DRAIN
SEE NOTE 2
"NOT TO PROTRUDE ABOVE PAN"
DRILL OR TAP FOR 1½ DIAMETER BOLT
TO SUIT INSTL BOLT AND NUT TO BE IN ACCORDANCE WITH SPEC MIL-B-857, TYPE II
SEE NOTE 2
½ LINER
SEE NOTES 2 AND 3
SUPPORTING STRUCTURE
SEE NOTES 2 AND 3
RD INSTALLATION
TYPE SHOWN
612796
9
8
2

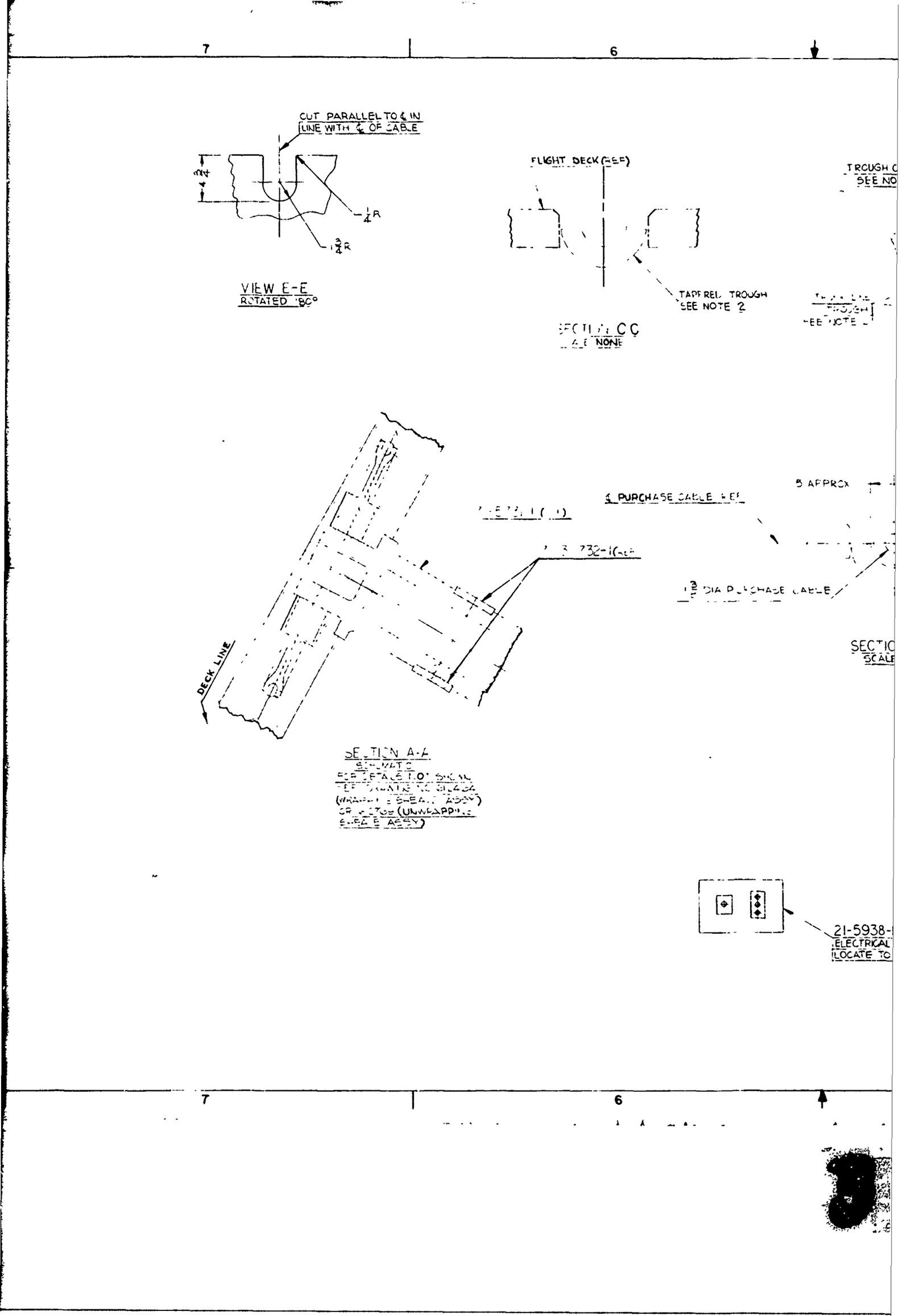
7
6
CUT PARALLEL TO ℄ IN LINE WITH ℄ OF CABLE
VIEW E-E
ROTATED 180°
FLIGHT DECK (REF)
TAPPRED TROUGH SEE NOTE 2
NONE
TROUGH
SEE NO
5 APPROX
℄ PURCHASE CABLE REF
DECK LINE
SECTION A-A
SCHEMATIC
(UNWRAPPING SHEAVE ASSY)
21-5938-
ELECTRICAL
LOCATE TO
7
6

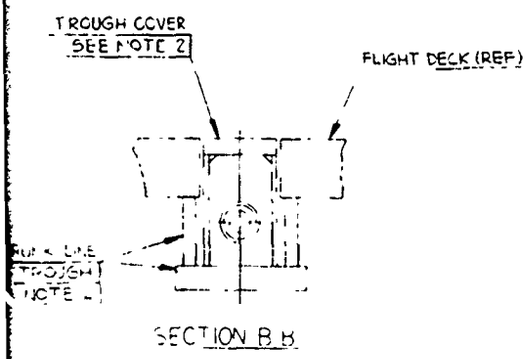

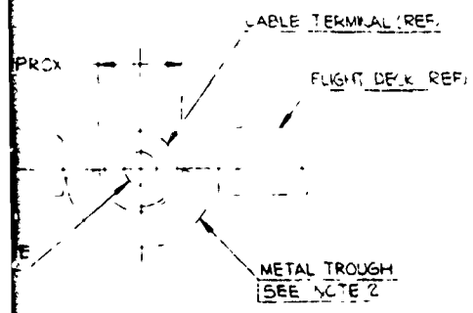

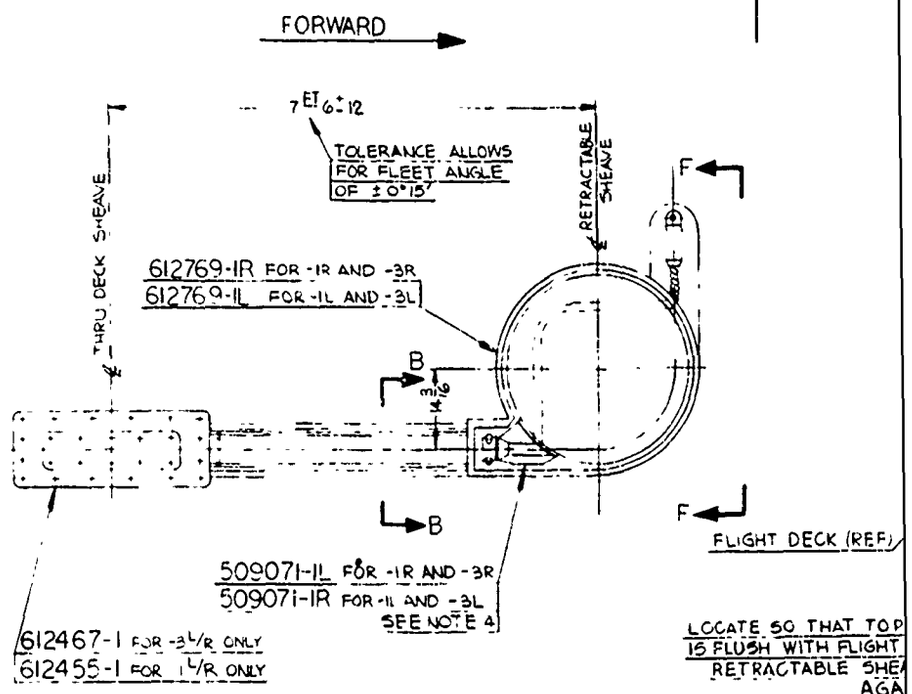

UNWRAPPING TYPE
-1R AND -3R STARBOARD INSTALLATION (SHOWN)
-1L AND -3L PORT INSTALLATION (OPPOSITE)
FOR DETAILS NOT SHOWN, SEE TYPICAL INSTALLATION
SCALE: 1 = 1 ET 0

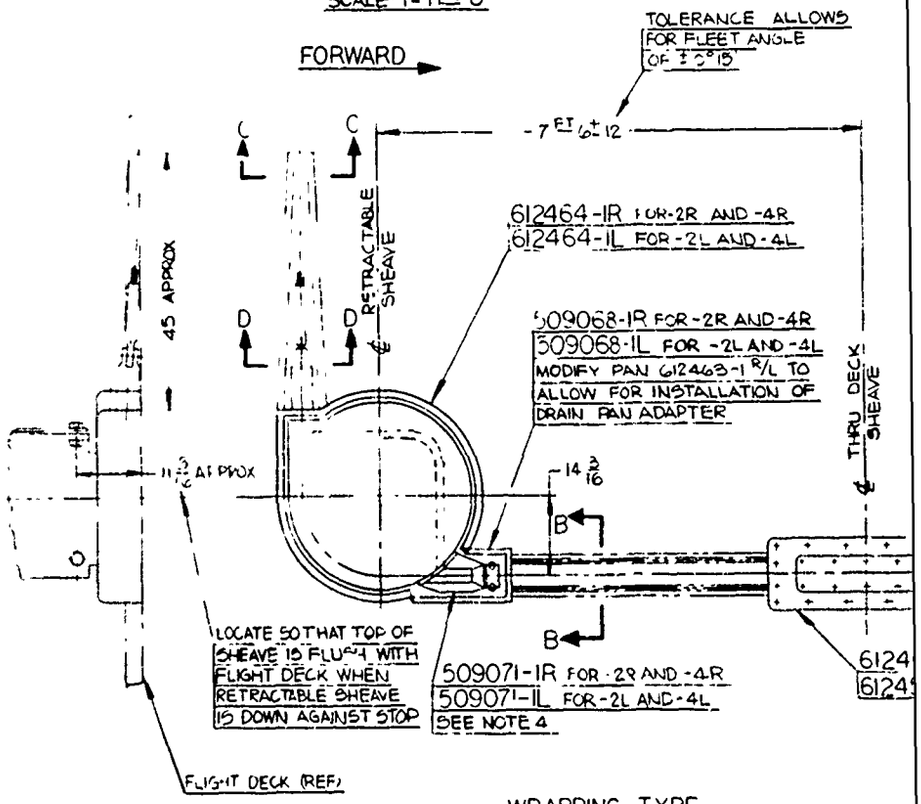

21-5938-1
ELECTRICAL WIRING
LOCATE TO SUIT

WRAPPING TYPE
-2R AND -4R STARBOARD INSTALLATION (SHOWN)
-2L AND -4L PORT INSTALLATION (OPPOSITE)
FOR DETAILS NOT SHOWN SEE TYPICAL INSTALLA
SCALE: 1 = 1 ET 0

612796

3 2

NOTES:

1. THIS DRAWING SHOWS DATA NECESSARY FOR THE PORT AND STARBOARD INSTALLATION OF RETRACTABLE SHEAVE ASSEMBLIES 612769-1 L/R AND 612464-1 L/R.
2. TROUGH COVER PLATE, METAL TROUGHS, 2 1/2 PIPE SIZE CABLE TRUNK LINE, 3 PIPE SIZE DRAIN LINE, LINERS, SUPPORTING STRUCTURES AND BOLTS TO BE FURNISHED UNDER THE COGNIZANCE OF THE INSTALLING ACTIVITY.
3. THE DESIGN OF SUPPORTING STRUCTURES MUST BE BASED ON THE 175,000 POUNDS NOMINAL BREAKING STRENGTH OF 1 3/8 DIAMETER, 6x19 WIRE ROPE, SPEC MIL-W-6015, WRAPPED 180° AROUND SHEAVE.
4. FAIRLEAD ASSEMBLY 509071-1 L/R MUST BE COCKED ON RETRACTABLE SHEAVE HOUSING SO THAT CENTERLINE COINCIDES WITH 2° ANGLE BETWEEN DECK SHEAVE AND FAIRLEAD SHEAVE WHEN RETRACTABLE SHEAVE IS IN RAISED (OPERATING) POSITION, SHIM OPEN CORNERS WHERE NECESSARY. WELD FAIRLEAD ASSEMBLY 509071-1 L/R IF MOUNTING BOLTS OF FAIRLEAD ASSEMBLIES ARE OBSTRUCTED BY THE SHEAVE HOUSING BOLTS. 2 5/16 DIAMETER COUNTERBORE IN FAIRLEAD ASSEMBLY 509071-1 L/R MUST BE MADE LARGER TO PERMIT 2 1/2 PIPE SIZE. CABLE TRUNK TO SWING BETWEEN EXTREME LIMITS SHOWN.
5. FOR INSTALLING AND REMOVAL OF RETRACTABLE SHEAVE ASSEMBLIES 612464-1 AND 612769-1 SEE NAEL DRAWING NUMBER 407768-1.
6. BOLTING REQUIREMENTS ARE TO BE IN ACCORDANCE WITH BUSHIPS INSTRUCTION 9110.54.
7. [illegible] DIMENSIONS AND DESIGNATIONS SHALL BE [illegible] IN ACCORDANCE WITH HANDBOOK H-28 [illegible] D-9, RESPECTIVELY.
8. FINISH IN ACCORDANCE WITH MPR 1201-12 FOR -1 L/R AND -2 L/R.

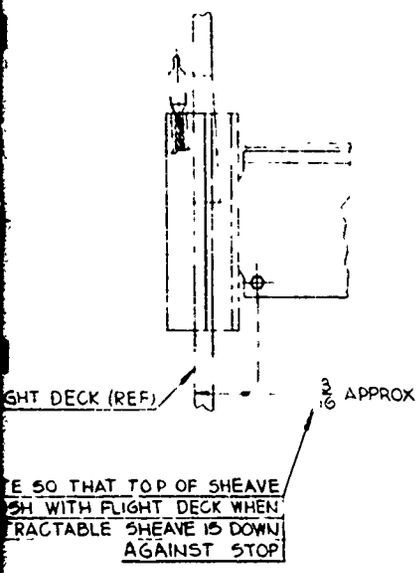

VIEW F-F

E ALLOWS
ANGLE

-4R
-4L

AND -4R
AND -4L
R/L TO
ION OF

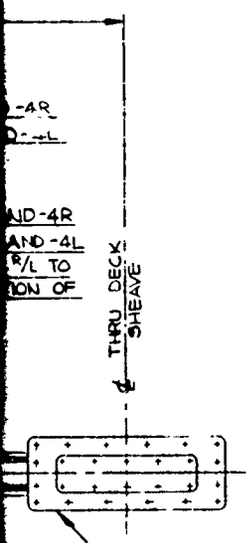

612467-1 FOR -4 R/L ONLY
612455-1 FOR -2 R/L ONLY

ION (SHOWN)
ION (OPPOSITE)
TYPICAL INSTALLATION

-4L	-4R	-3L	-3R	-2L	-2R	-1L	-1R	NEXT ASSEMBLY	QTY REQD	PART NUMBER	DESCRIPTION
				1						509066-1L	DRAIN
	1				1					509068-1R	DRAIN
6	6	6	6	6	6	6	6			MS20074-06-11	B
6	6	6	6	6	6	6	6			AN935-616L	LOC
16	16	16	16	16	16	16	16			A91850-3	LOCKV
2	2	2	2							90444-942	BOL
14	14	14	14	16	16	16	16			90444-926	BO
		1				1				612769-1L	RETRA
			1				1			612769-1R	RETRA
1	1	1	1	1						612467-1	THRU
1				1						612464-1L	RETRA
	1				1					612464-1R	RETRA
				1	1	1	1			612455-1	THRU
1			1	1			1			509071-1L	FAIRLE
	1	1			1	1				509071-1R	FAIRLE
1	1	1	1	1	1	1	1			21-5530-1	ELECTR
										612796-4½	RETRAC
										612796-3½	RETRAC
										612796-2½	RETRAC
										612796-1½	RETRAC

NO REQUIRED PER ASSEMBLY

UNLESS OTHERWISE SPECIFIED DIMENSIONS ARE IN INCHES
TOLERANCES ON FRACTIONS ±1/64 DECIMALS ±.00 ANGLES ±½°

THESE DOCUMENTS ALSO ARE A PART OF THIS DRAWING
MPR 1201

MECHANICAL FINISH SURFACE ROUGHNESS IN MICROINCHES
√ THIS SYMBOL EMBRACING THE SURFACE ROUGHNESS IN MICRO INCHES REPRESENTS THE MAXIMUM ACCEPTABLE ROUGHNESS AND MAY BE PRODUCED BY ANY MECHANICAL PROCESS
REF SPEC MIL-STD 10

DESIGNED MK7 MOD1
FOR MK7 MOD2, MK7 MOD3
REF

DRAWN	
CHECKED	
MATERIAL	
ANALYZED	
SUPERVISOR	
APPROVED	

CLASSIFICATION OF CHARACTERISTICS
CRITICAL C TO C
MAJOR - M TO M
MINOR ALL OTHER CHARACTERISTICS

3 2

REVISIONS				
ZONE	SYM	DESCRIPTION	DATE	APPROVED
	A	CLASS R CHG NO REV NOTICE. REPLACES DWG 612796 NO REV WITHOUT CHG RA RD		

NOTES:

1. THIS DRAWING SHOWS DATA NECESSARY FOR THE PORT AND STARBOARD INSTALLATION OF RETRACTABLE SHEAVE ASSEMBLIES 612769-1 L/R AND 612464-1 L/R.
2. TROUGH COVER PLATE, METAL TROUGHS, 2 1/2 PIPE SIZE CABLE TRUNK LINE, 3 PIPE SIZE DRAIN LINE, LINERS, SUPPORTING STRUCTURES AND BOLTS TO BE FURNISHED UNDER THE COGNIZANCE OF THE INSTALLING ACTIVITY.
3. THE DESIGN OF SUPPORTING STRUCTURES MUST BE BASED ON THE 175,000 POUNDS NOMINAL BREAKING STRENGTH OF 1 3/8 DIAMETER, 6x19 WIRE ROPE, SPEC MIL-W-6015, WRAPPED 180° AROUND SHEAVE.
4. FAIRLEAD ASSEMBLY 509071-1 L/R MUST BE COCKED ON RETRACTABLE SHEAVE HOUSING SO THAT CENTERLINE COINCIDES WITH 2° ANGLE BETWEEN DECK SHEAVE AND FAIRLEAD SHEAVE WHEN RETRACTABLE SHEAVE IS IN RAISED (OPERATING) POSITION, SHIM OPEN CORNERS WHERE NECESSARY. WELD FAIRLEAD ASSEMBLY 509071-1 L/R IF MOUNTING BOLTS OF FAIRLEAD ASSEMBLIES ARE OBSTRUCTED BY THE SHEAVE HOUSING BOLTS. 2 5/16 DIAMETER COUNTERBORE IN FAIRLEAD ASSEMBLY 509071-1 L/R MUST BE MADE LARGER TO PERMIT 2 1/2 PIPE SIZE. CABLE TRUNK TO SWING BETWEEN EXTREME LIMITS SHOWN.
5. FOR INSTALLING AND REMOVAL OF RETRACTABLE SHEAVE ASSEMBLIES 612464-1 AND 612769-1 SEE NAEL DRAWING NUMBER 407768-1.
6. BOLTING REQUIREMENTS ARE TO BE IN ACCORDANCE WITH BUSHIPS INSTRUCTION 9110.54.
7. THREAD DIMENSIONS AND DESIGNATIONS SHALL BE INTERPRETED IN ACCORDANCE WITH HANDBOOK H28 AND MIL-STD-9, RESPECTIVELY.
8. FINISH IN ACCORDANCE WITH MPR 1201-12 FOR -1 L/R AND -2 L/R.

-4L	-4R	-3L	-3R	-2L	-2R	-1L	-1R	NEXT ASSEMBLY	QTY PER OD	PART NUMBER	DESCRIPTION	STOCK	MATERIAL	SPECIFICATION	UNIT WT	ZONE
1				1						509068-1L	DRAIN PAN ADAPTER					
	1				1					509068-1R	DRAIN PAN ADAPTER					
6	6	6	6	6	6	6	6			MS20074-06-11	BOLT					
6	6	6	6	6	6	6	6			AN935-6L	LOCKWASHER					
16	16	16	16	16	16	16	16			AN960-3	LOCKWASHER					
2	2	2	2							90444-942	BOLT					
14	14	14	14	16	16	16	16			90444-926	BOLT					
		1				1				612769-1L	RETRACTABLE SHEAVE ASSEMBLY					
			1				1			612769-1R	RETRACTABLE SHEAVE ASSEMBLY					
1	1	1	1							612467-1	THRU DECK SHEAVE ASSEMBLY					
1				1						612464-1L	RETRACTABLE SHEAVE ASSEMBLY					
	1				1					612464-1R	RETRACTABLE SHEAVE ASSEMBLY					
				1	1	1	1			612455-1	THRU DECK SHEAVE ASSEMBLY					
1				1	1		1			509071-1L	FAIRLEAD ASSEMBLY					
	1	1				1	1			509071-1R	FAIRLEAD ASSEMBLY					
1	1	1	1	1	1	1	1			21-5938-1	ELECTRICAL WIRING					
										612796-4A	RETRACTABLE SHEAVE INSTL (WRAPPING, STEEL DECK)					
										612796-3A	RETRACTABLE SHEAVE INSTL (WRAPPING, STEEL DECK)					
										612796-2A	RETRACTABLE SHEAVE INSTL (WRAPPING, WOOD DECK)					
										612796-1A	RETRACTABLE SHEAVE INSTL (WRAPPING, WOOD DECK)					

NO REQUIRED PER ASSEMBLY

LIST OF MATERIALS

UNLESS OTHERWISE SPECIFIED DIMENSIONS ARE IN INCHES
TOLERANCES ON FRACTIONS ±1/64 DECIMALS ±.00 ANGLES ±½°

THESE DOCUMENTS ALSO ARE A PART OF THIS DRAWING
MPR 1201

MECHANICAL FINISH SURFACE ROUGHNESS IN MICROINCHES
√ THIS SYMBOL EMBRACING THE SURFACE ROUGHNESS IN MICRO INCHES REPRESENTS THE MAXIMUM ACCEPTABLE ROUGHNESS AND MAY BE PRODUCED BY ANY MECHANICAL PROCESS
REF SPEC MIL STD 10

DESIGNED MK7 MOD1, FOR MK7 MOD2, MK7 MOD3
REF

DRAWN	CAPORALE	27 FEB 67
CHECKED	[illegible]	4 MAR 67
MATERIAL		
ANALYZED		
SUPERVISOR	F K [illegible]	[illegible]
APPROVED	[illegible]	DATE
APPROVED		

ENGINEERING DEPARTMENT (S)
NAVAL AIR ENGINEERING CENTER, PHILA., PA. 19112

TITLE
SHEAVE RETRACTABLE
WRAPPING AND UNWRAPPING INSTALLATION TYP
1 3/8 DIA CABLE, 28 PD

DRAWING NO 612796
SHEET

CLASSIFICATION OF CHARACTERISTICS

CRITICAL	C TO C
MAJOR	-M TO M
MINOR	ALL OTHER CHARACTERISTICS

CLASSIFICATION OF CHARACTERISTICS	
CRITICAL	— C TO C
MAJOR	— M TO M
MINOR	— ALL OTHER CHARACTERISTICS

NOTES:

1. EACH IMPACT PAD GROUP SHALL CONSIST OF NINE (9) INDIVIDU POLYURETHANE IMPACT PAD ASSEMBLIES, 408320-1.
2. THE PAD GROUP SHALL BE INSTALLED IN A MANNER WHICH WILL FACILITATE READY REPLACEMENT OF INDIVIDUAL PADS
3. A RAMP SHALL BE PROVIDED AROUND EACH PAD GROUP TO FAC MOVEMENT OF AIRCRAFT. THE RAMP SHALL BE FAIRED IN WITH N FLIGHT DECK COMPOUND.
4. PROVIDE SUITABLE SLOTS IN RAMP TO PERMIT DRAINAGE
5. IMPACT PADS TO BE INSTALLED AT DECK PENDANT POSITIONS
6. FOR VESSELS IN SERVICE, THE LOCATING DIMENSIONS SHOWN FOR GENERAL GUIDANCE AND MAY BE MODIFIED TO MATCH CABLE TERMINAL MARKINGS IN DECK IF NECESSARY. THE ME IMPACT AREA OF ACTUAL CABLE TERMINAL MARKS IN DEC BE USED FOR LOCATING THE INTERSECTING CENTERLINES THE IMPACT PAD ARRANGEMENT.

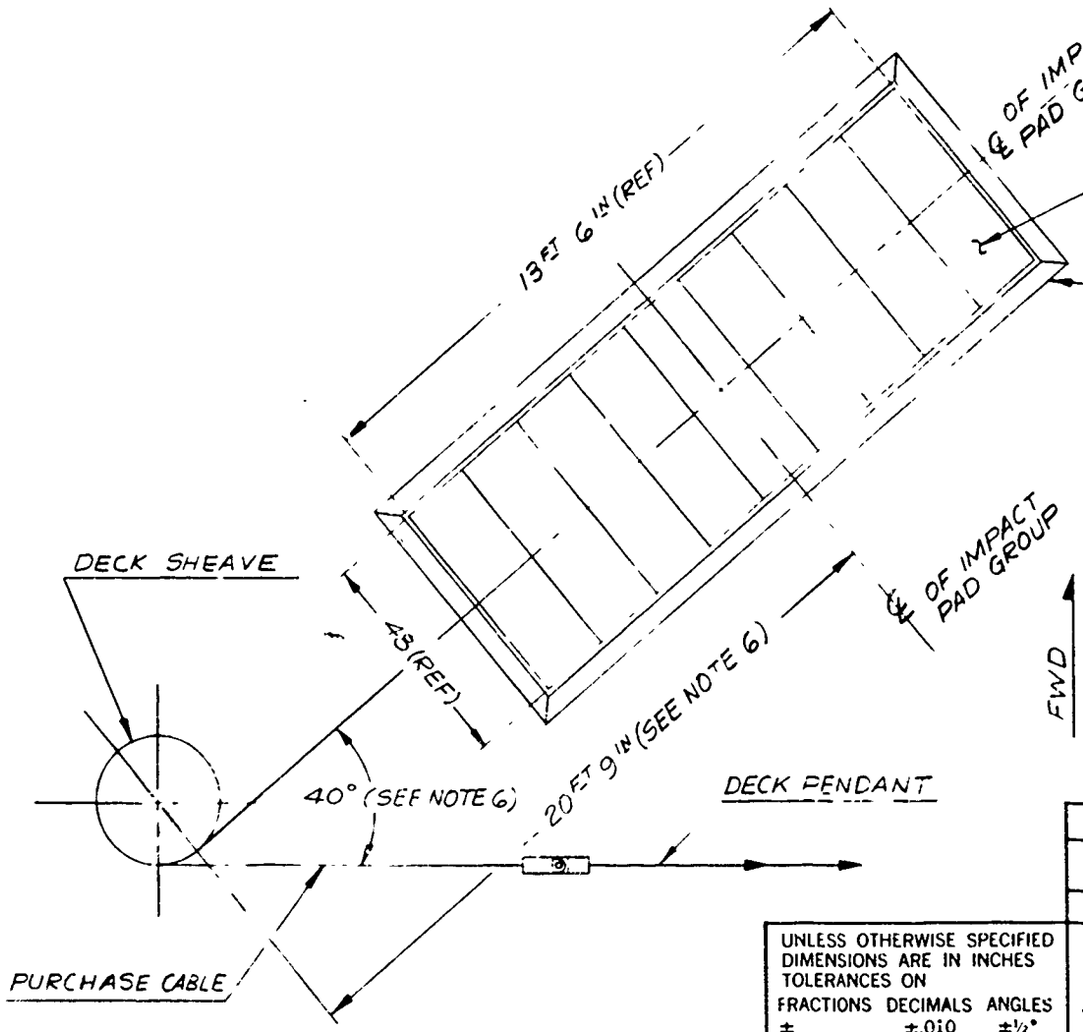

PORT SHOWN
STBD OPPOSITE

NEXT ASSEMBLY	QTY REQD	PART NUMBER	
		419045-1	IM

UNLESS OTHERWISE SPECIFIED DIMENSIONS ARE IN INCHES
TOLERANCES ON
FRACTIONS DECIMALS ANGLES
± ±.010 ±½°

THESE DOCUMENTS ALSO ARE A PART OF THIS DRAWING

MECHANICAL FINISH SURFACE ROUGHNESS IN MICROINCHES

✓ = SURFACE ROUGHNESS IN ACCORDANCE WITH ASA B46

DESIGNED FOR MK 7 MOD 3

REF

DR
CHE
MAT
ANA
SUPE
APPR
APPR

REVISIONS			
SYM	DESCRIPTION	DATE	APPROVED

UP SHALL CONSIST OF NINE (9) INDIVIDUAL
T PAD ASSEMBLIES, 408320-1.
BE INSTALLED IN A MANNER WHICH WILL
PLACEMENT OF INDIVIDUAL PADS
VIDED AROUND EACH PAD GROUP TO FACILITATE
T. THE RAMP SHALL BE FAIRED IN W TH NON-SKID
UND.
SLOTS IN RAMP TO PERMIT DRAINAGE.
TALLED AT DECK PENDANT POSITIONS ONLY.
CE, THE LOCAT NG DIMENSIONS SHOWN ARE
NCE AND MAY BE MODIFIED TO MATCH ACTUAL
RKINGS IN DECK IF NECESSARY. THE MEAN
UAL CABLE TERMINAL MARKS IN DECK SHALL
TING THE INTERSECTING CENTERLINES OF
RANGEMENT.

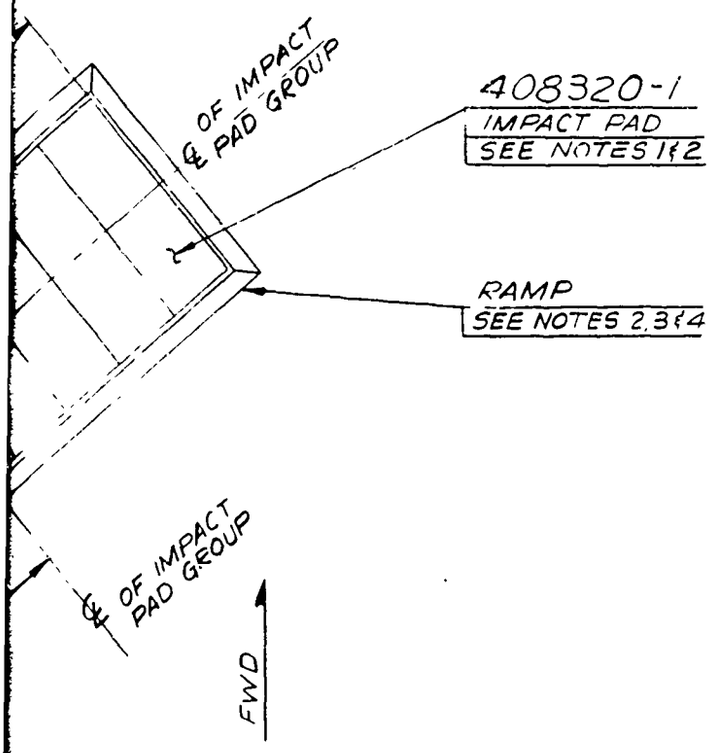

419045

PENDANT

NEXT ASSEMBLY	QTY REQD	PART NUMBER	DESCRIPTION	STOCK	MATERIAL	SPECIFICATION	UNIT WT
		419045-1	INSTALLATION DATA				

LIST OF MATERIALS

ESS OTHERWISE SPECIFIED
ENSIONS ARE IN INCHES
ERANCES ON
CTIONS DECIMALS ANGLES
±.010 ±½°

SE DOCUMENTS ALSO ARE A
T OF THIS DRAWING

MECHANICAL FINISH SURFACE ROUGHNESS IN MICROINCHES

✓ = SURFACE ROUGHNESS IN ACCORDANCE WITH ASA B46

DRAWN	J BARBELLA	2-19-69
CHECKED	3PM	2-27-69
MATERIAL	—	—
ANALYZED	—	—
SUPERVISOR		2/27/69
APPROVED		DATE
APPROVED		DATE

DESIGNED FOR MK 7 MOD 3

REF

ENGINEERING DEPARTMENT (SI)
NAVAL AIR ENGINEERING CENTER, PHILA., PA. 19112

TITLE
INSTALLATION DATA
MARK 7 MOD 3 ARRESTING GEAR
TERMINAL IMPACT PAD
METAL DECK

SIZE	CODE IDENT	DRAWING NO.
C	NO. 80020	419045
SCALE NONE		SHEET

List 252

FIGURE 11

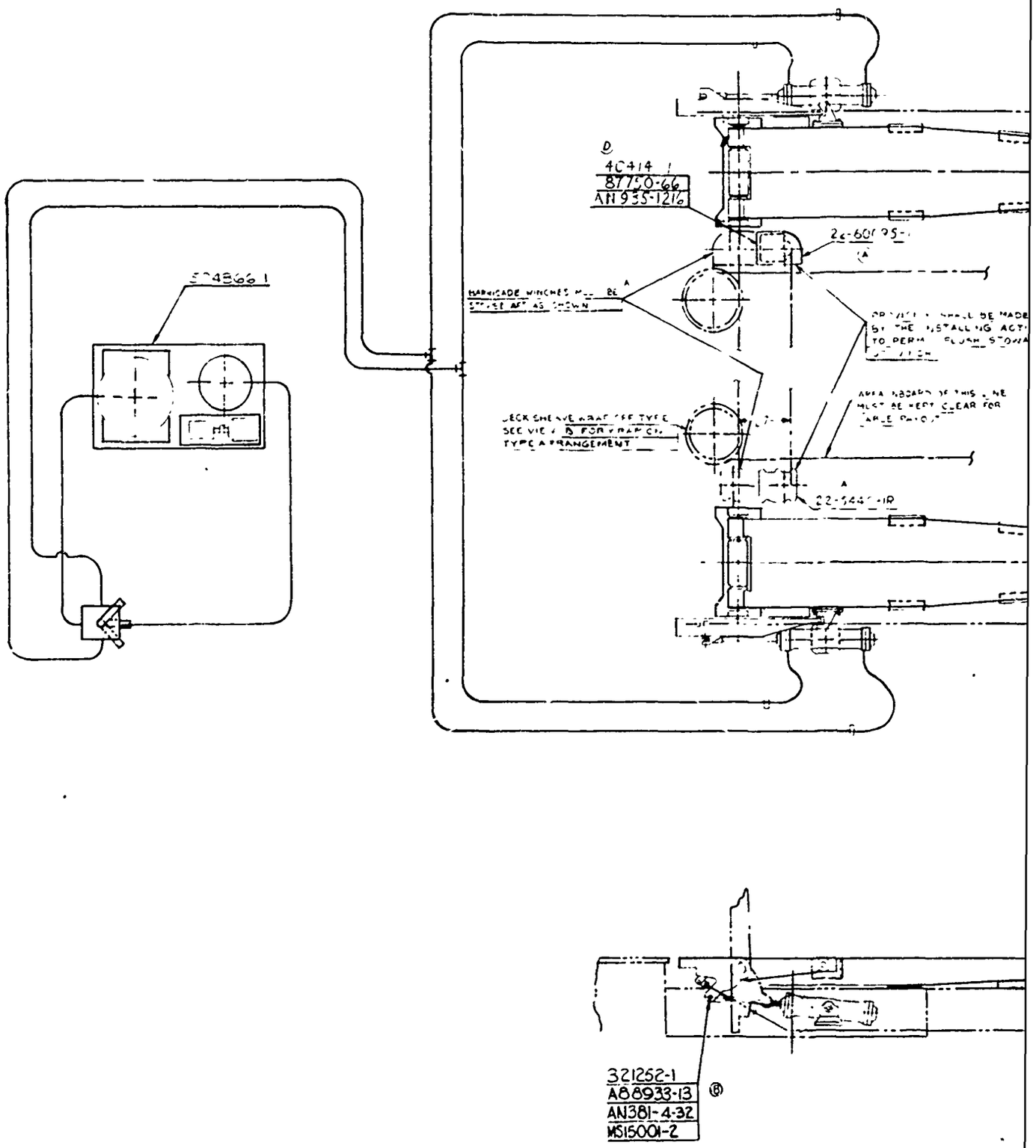

40414
87750-66
AN935-1216
BARRICADE WINCHES
DECK SHEAVE WRAP OFF TYPE
SEE VIEW B FOR
TYPE A ARRANGEMENT
321252-1
A88933-13
AN381-4-32
MS15001-2

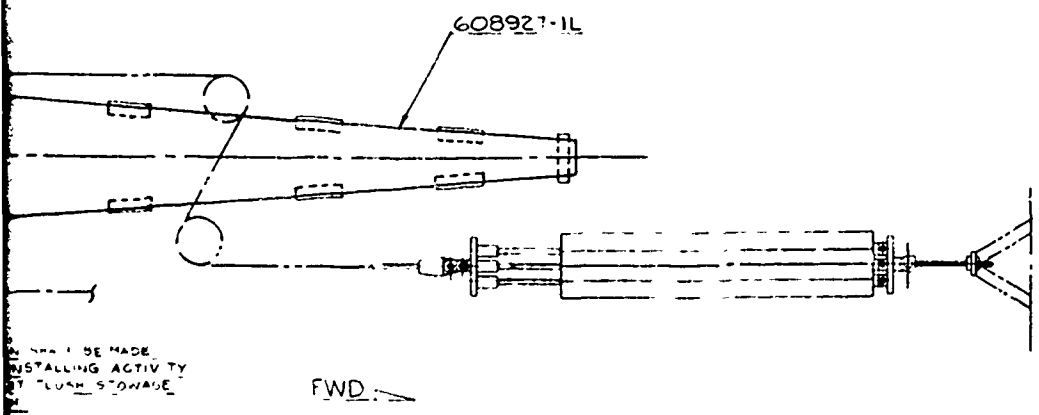

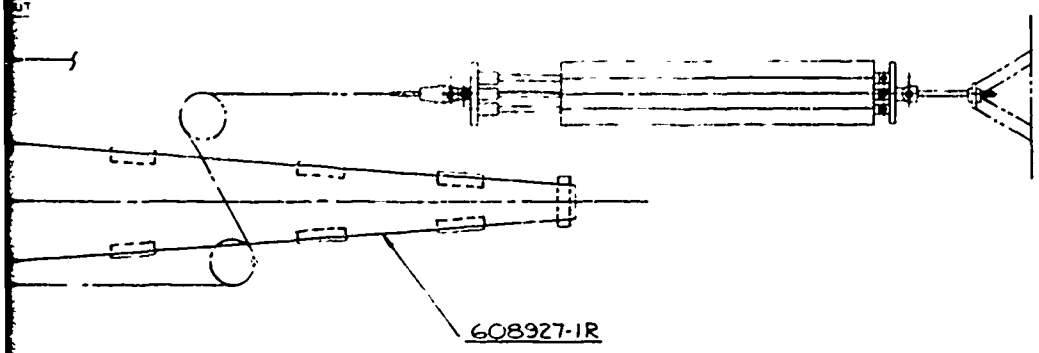

PLAN

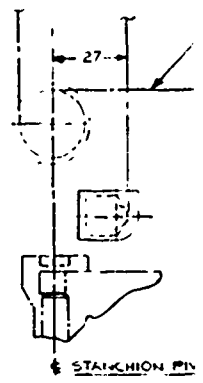

VIEW B
SCALE 1:12

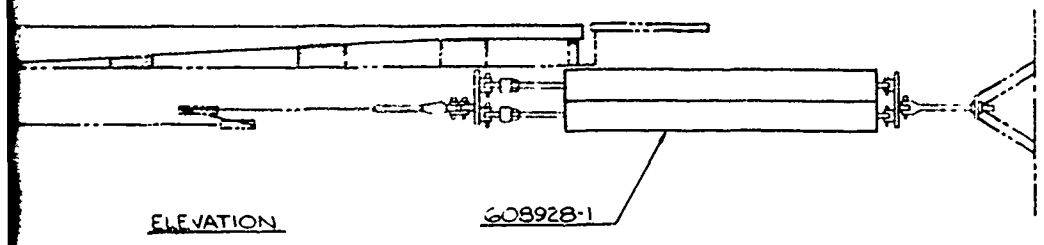

ELEVATION

608926

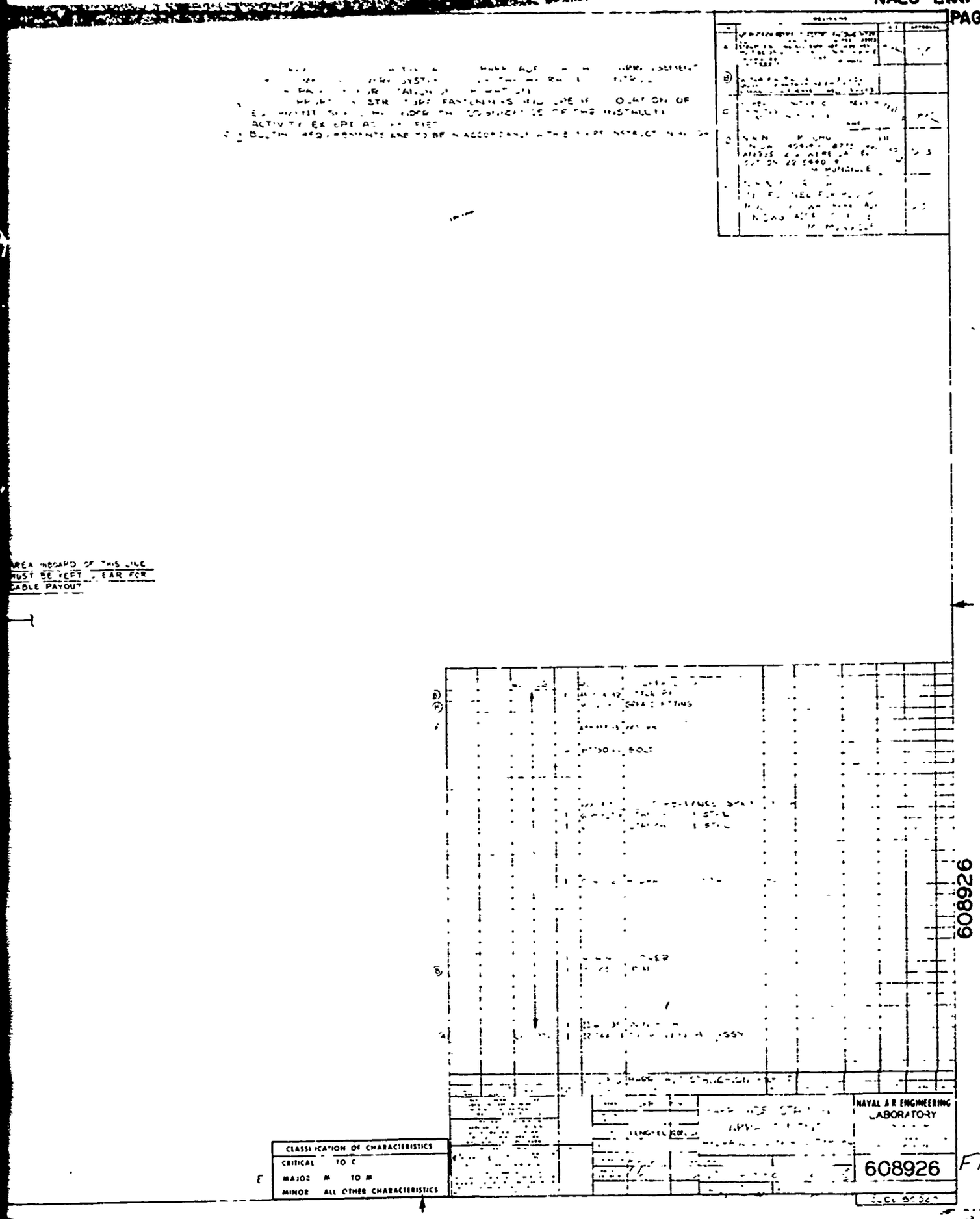
AREA INBOARD OF THIS LINE MUST BE KEPT CLEAR FOR CABLE PAYOUT
608926
NAVAL AIR ENGINEERING LABORATORY
608926
CLASSIFICATION OF CHARACTERISTICS
CRITICAL TO C
MAJOR M TO M
MINOR ALL OTHER CHARACTERISTICS

FIGURE 12

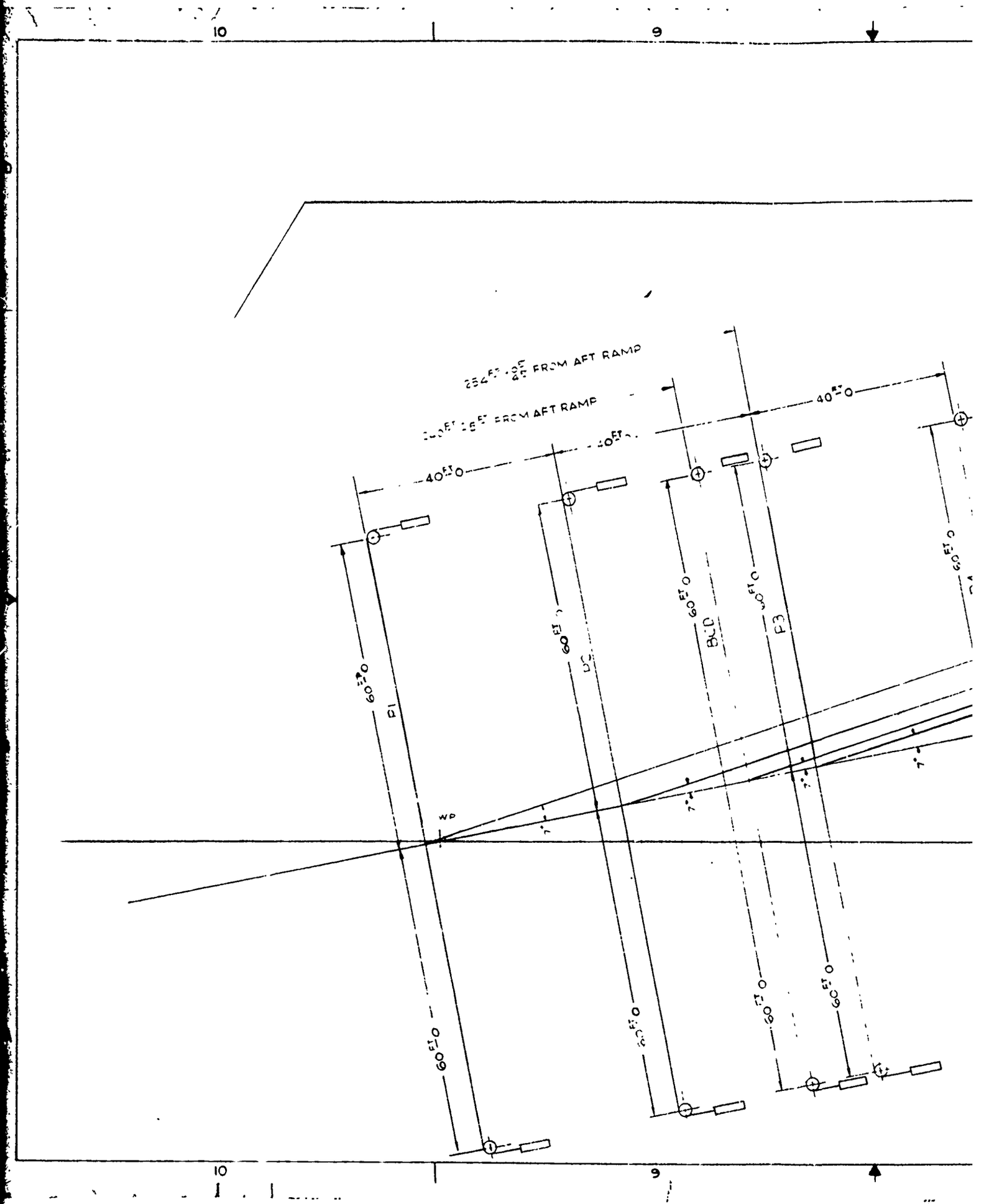
10
9
FROM AFT RAMP
FROM AFT RAMP
40 FT 0
40 FT 0
40 FT 0
60 FT 0
60 FT 0
60 FT 0
60 FT 0
60 FT 0
60 FT 0
60 FT 0
60 FT 0
60 FT 0
P1
BCD
P3
WP
7°
7°
7°
7°
10
9

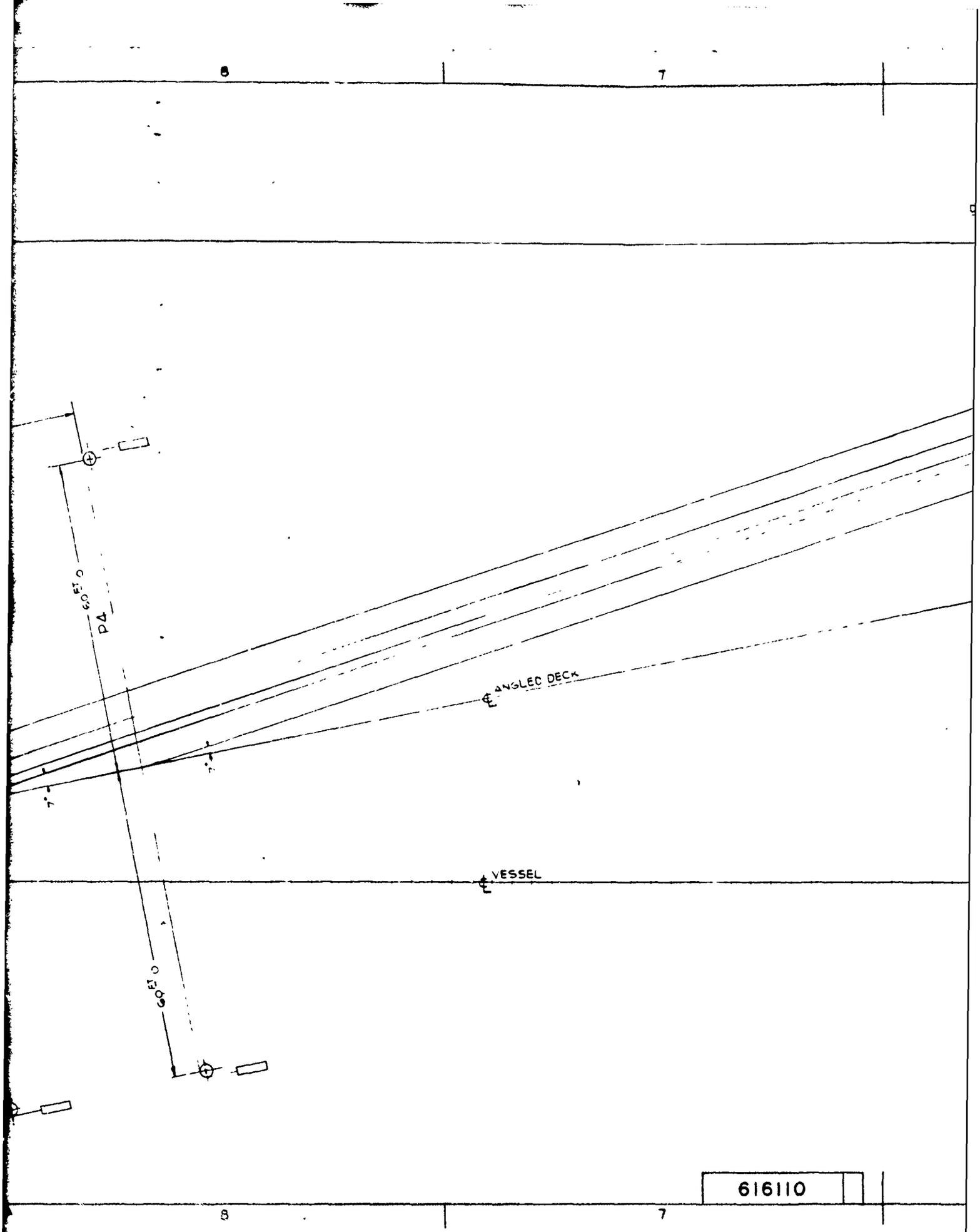

2

6 5

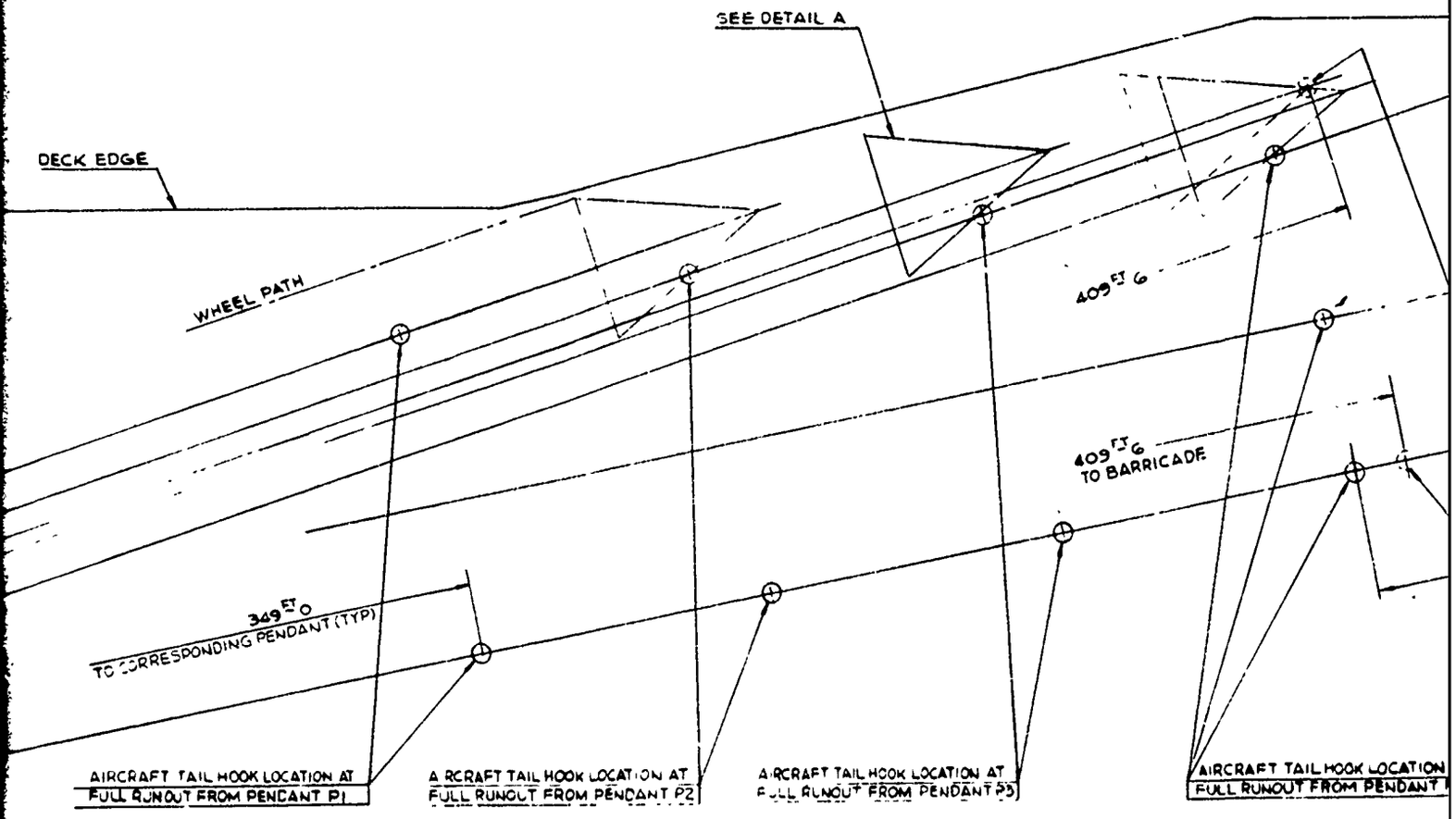

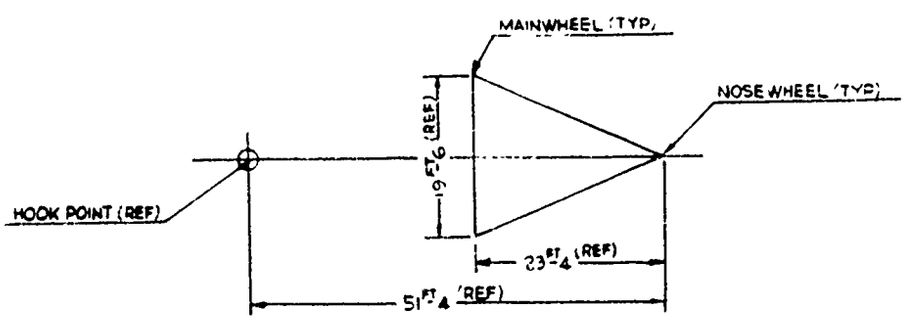

DETAIL A.
E 2A WHEEL PATTERN
SEE NOTE #3

6 5

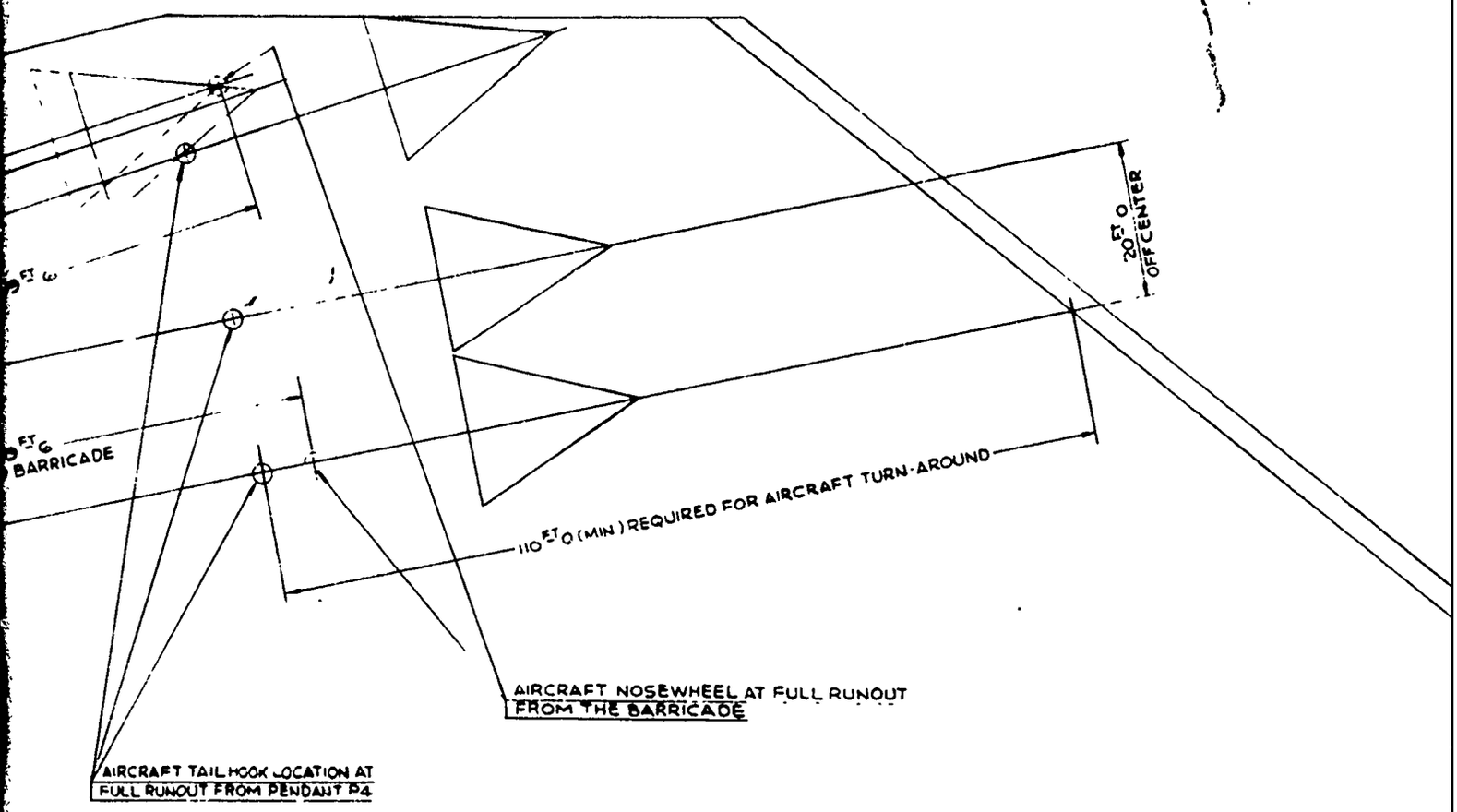
20 FT 0
OFF CENTER
BARRICADE
110 FT 0 (MIN) REQUIRED FOR AIRCRAFT TURN-AROUND
AIRCRAFT NOSEWHEEL AT FULL RUNOUT
FROM THE BARRICADE
AIRCRAFT TAIL HOOK LOCATION AT
FULL RUNOUT FROM PENDANT P4

616110

REVISIONS				
ZONE	SYM	DESCRIPTION	DATE	APPROVED

NOTES:

1. THIS DRAWING SHOWS THE RESULTS OF THE ARRESTING GEAR ARRANGEMENT EVALUATION FOR FUTURE AIRCRAFT CARRIERS. THIS STUDY WAS MADE UTILIZING TWO BASIC AIRCRAFT LANDING CRITERIA:
   - A. SHOWING LANDINGS APPLIED PARALLEL TO THE ANGLED DECK CENTERLINE, TWENTY FEET OFF-CENTER TO THE PORT
   - B. SHOWING LANDING APPLIED ON-CENTER-ANGLED TO THE PORT. THE YAW ANGLE WHICH SAFELY ACCOMMODATES ARRESTMENTS FOR ALL PENDANTS, AND THE BARRICADE, IS THE ANGLE OF 7°, AS SHOWN.
2. PENDANT AND BARRICADE ENGINES ARE MARK 7 MOD 3 PENDANT ENGINE RAM TRAVEL IS 183 INCHES (LONG STROKE CAM). THE BARRICADE ENGINE RAM TRAVEL IS 160 INCHES (SHORT STROKE CAM)
3. THE E-2A AIRCRAFT WHEEL PATTERN SHOWN IN DETAIL 'A' REPRESENTS THE CRITICAL LIMITS OF AIRCRAFT PLACEMENTS AT THE COMPLETION OF RUNOUT. THE E-2A IS THE MOST CRITICAL EXPECTED FOR PRESENT OR NEAR FUTURE CARRIER SUITABILITY

616110

NEXT ASSEMBLY	QTY REQD	PART NUMBER	DESCRIPTION	STOCK	MATERIAL	SPECIFICATION

LIST OF MATERIALS

UNLESS OTHERWISE SPECIFIED DIMENSIONS ARE IN INCHES
TOLERANCES ON
FRACTIONS DECIMALS ANGLES
± — ±0.060 ±1/2°

THESE DOCUMENTS ALSO ARE A PART OF THIS DRAWING

MECHANICAL FINISH SURFACE ROUGHNESS IN MICROINCHES
✓ = SURFACE ROUGHNESS IN ACCORDANCE WITH ASA B46

DRAWN	L. CALHOUN	
CHECKED		
MATERIAL	—	—
ANALYZED	—	—
SUPERVISOR		
APPROVED		DATE
APPROVED		DATE

ENGINEERING DEPARTMENT (EE)
NAVAL AIR ENGINEERING CENTER PHILA PA 19112

TITLE
FLIGHT DECK STUDY
MK 7 MOD 3 ARRESTING GEAR

DESIGNED FOR MK 7 MOD3

REF

SIZE H | CODE IDENT NO 80020 | DRAWING NO. 616110

SCALE 1/8 | SHEET

CLASSIFICATION OF CHARACTERISTICS
CRITICAL — C TO C
MAJOR — M TO M
MINOR — ALL OTHER CHARACTERISTICS

FIGURE

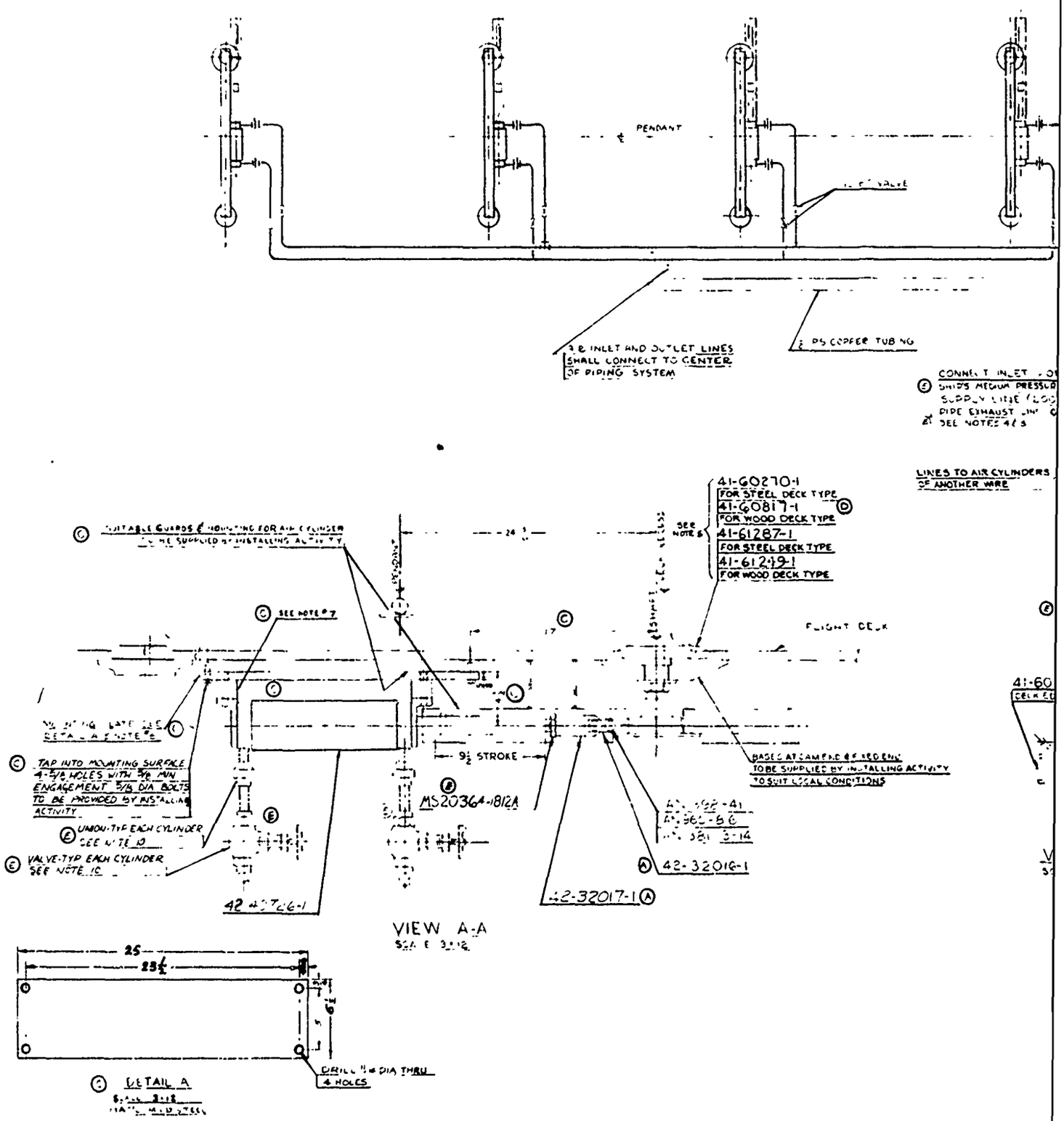
PENDANT
VALVE
INLET AND OUTLET LINES SHALL CONNECT TO CENTER OF PIPING SYSTEM
PS COPPER TUBING
CONNECT INLET
SHIP'S MEDIUM PRESSURE SUPPLY LINE
PIPE EXHAUST LINE
SEE NOTES 4 & 5
LINES TO AIR CYLINDERS OF ANOTHER WIRE
41-60270-1
FOR STEEL DECK TYPE
41-60817-1
FOR WOOD DECK TYPE
41-61287-1
FOR STEEL DECK TYPE
41-61249-1
FOR WOOD DECK TYPE
SEE NOTE 5
SUITABLE GUARDS & MOUNTING FOR AIR CYLINDER TO BE SUPPLIED BY INSTALLING ACTIVITY
SEE NOTE #7
FLIGHT DECK
TAP INTO MOUNTING SURFACE 4-5/8 HOLES WITH 5/8 MIN ENGAGEMENT 5/8 DIA BOLTS TO BE PROVIDED BY INSTALLING ACTIVITY
UNION-TYP EACH CYLINDER SEE NOTE 10
VALVE-TYP EACH CYLINDER SEE NOTE 10
9½ STROKE
MS20364-1812A
BASES AT CAM END & FIXED END TO BE SUPPLIED BY INSTALLING ACTIVITY TO SUIT LOCAL CONDITIONS
42-32016-1
42-32017-1
VIEW A-A
25
23½
DRILL 11/16 DIA THRU 4 HOLES
DETAIL A

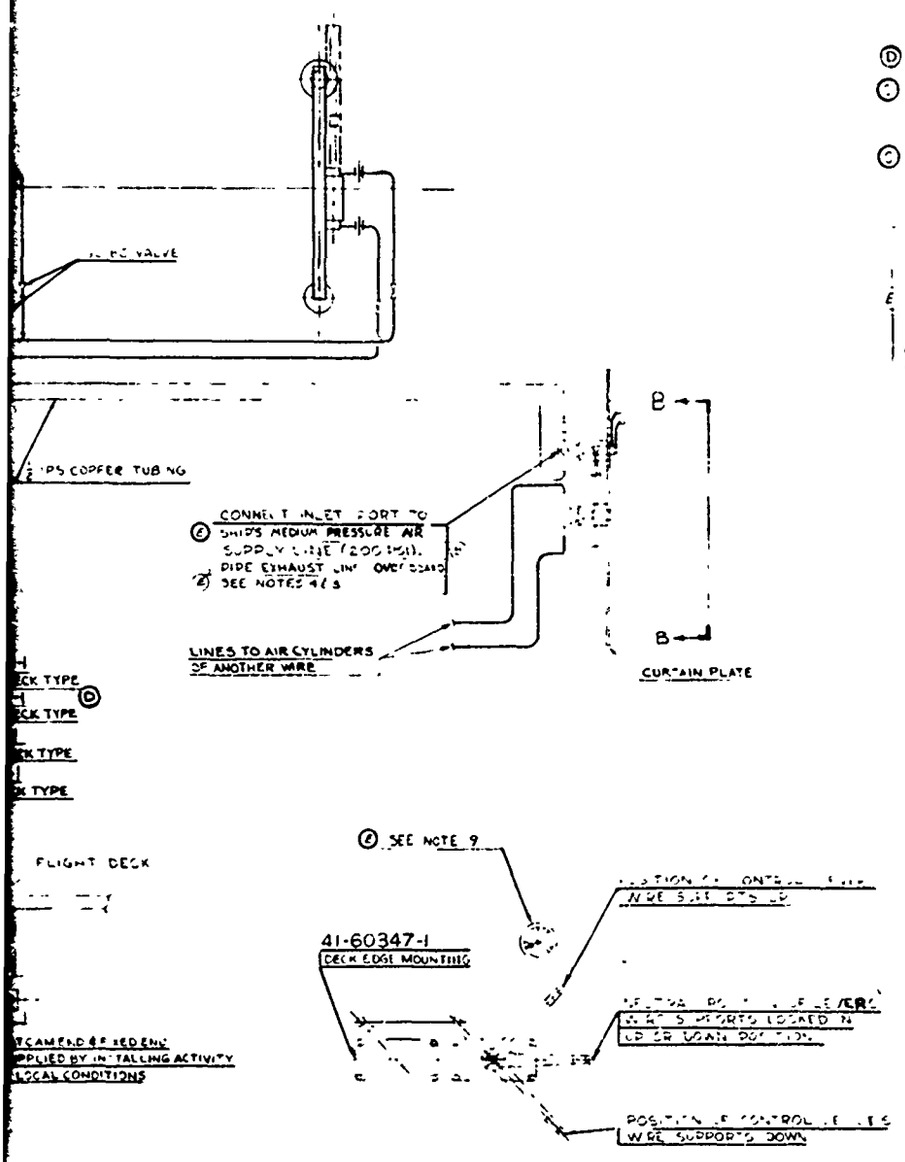

VIEW B-B
SCALE 1½ = 12

NOTES

1. THIS DRAWING SHOWS A TYPICAL INSTALLATION OF ARRESTING GEAR WIRE SUPPORT AND DOUBLE CONTROLS WITH INDIVIDUAL CYLINDER TO OPERATE CAM FOR EACH WIRE SUPPORT. NUMBERS OF ALL ITEMS REFERRED TO ARE NAVAL AIRCRAFT FACTORY DRAWINGS
2. ARRANGEMENT, QUANTITY AND TYPE OF ALL ITEMS SHALL BE INSTALLED UNDER COGNIZANCE OF THE INSTALLING ACTIVITY TO SUIT LOCAL CONDITIONS
3. NAME PLATES SHOWING WIRE UP, NEUTRAL AND WIRE DOWN, AND STOPS FOR LIMITING POSITION OF LEVER, ALSO NAME PLATES DESIGNATING NUMBER OF WIRE CONTROLLED BY EACH LEVER SHALL BE FURNISHED BY THE INSTALLING ACTIVITY
4. INLET LINES SHALL BE PROVIDED BY THE INSTALLING ACTIVITY WITH SHUT OFF VALVE AND SUITABLE STRAINER TO PREVENT FOREIGN MATTER OR EXCESSIVE MOISTURE FROM ENTERING PIPING SYSTEM
5. (D) FOR NEW INSTALLATIONS USE WIRE SUPPORT DWGS 4 [illegible] AND 4 [illegible] FOR EXISTING INSTALLATIONS USE WIRE SUPPORT DWGS 4 [illegible] AND [illegible] 817
6. (C) MOUNTING PLATE IS INTENDED TO PERMIT INTERCHANGEABLE MOUNTING OF AIR CYLINDERS FROM VARIOUS MANUFACTURERS WHOSE DIMENSIONS FALL WITHIN THE LIMITS SHOWN ON NAEF DWG No 42-4 726 THE PLATE MAY HAVE TO HAVE ADDITIONAL HOLES TAPPED IN IT TO ACCOMMODATE SOME REPLACEMENT CYLINDERS
7. (C) PROVIDE SPACERS AS REQUIRED BETWEEN AIR CYLINDER AND MOUNTING PLATE DRILL THRU SPACERS AND TAP INTO MOUNTING PLATE TO MATCH LOCATION AND SIZE OF MOUNTING HOLES IN AIR CYLINDER MOUNT AIR CYLINDER ON PLATE CENTERLINE, INSTALLING ACTIVITY SHALL SUPPLY SPACERS
8. THE 200 PSI AIR SUPPLY PROVIDED BY INSTALLING ACTIVITY MUST NOT DROP BELOW 175 PSI MAXIMUM REQUIREMENT IS 225 PSI THIS AIR REQUIREMENT MUST BE PIPED FROM A MEDIUM PRESSURE AIR LINE WITH AN AIR STATION INSTALLED TO PROVIDE THE ABOVE AIR REQUIREMENTS
9. (E) THE INSTALLING ACTIVITY SHALL PROVIDE AN AIR PRESSURE GAUGE WITH A RANGE OF 0 TO 300 PSI CONNECTED TO THE WIRE SUPPORT AIR SUPPLY MANIFOLD, LOCATED AT THE ARRESTING GEAR CONTROL PANEL
10. VALVES AND RELATED HARDWARE TO BE FURNISHED BY THE INSTALLING ACTIVITY
11. THIS DRAWING IS TO BE USED IN CONJUNCTION WITH MARK 7 ARRESTING GEAR SERVICE CHANGE No 264 AND No 265

REFERENCE PLANS

1. WIRE SUPPORT-ASSY-(STEE
2. WIRE SUPPORT-ASSY-(WOO
3. CONTROLS-DECK EDGE-AS
4. AIR CYLINDER-ASSY
5. WIRE SUPPORT-ASSY(STEEL
6. (D) WIRE SUPPORT-ASSY(WOOD

CLASSIFICATION OF CHARACTERISTICS	
CRITICAL	C TO C
MAJOR	M TO M
MINOR	ALL OTHER CHARACTERISTICS

GRAY
WEIL

LIST 250,2

2

REVISIONS			
A	[illegible]	[illegible]	[illegible]
B	[illegible]	[illegible]	[illegible]
C	[illegible] CHANGED MOUNTING FOR AIR CYLINDER SEE REVISION BLIP ADDED DETAIL A 17 DIM. ADDED NOTES 6 & 7	[illegible]	NC
D	NEW CL'RCHG [illegible] NOTE 5 - 41-60817 WAS 4-30-66	[illegible]	[illegible]
E	SEE REVISION NOTICE R ULAK	[illegible]	[illegible]

NOTES

1. THIS DRAWING SHOWS A TYPICAL INSTALLATION OF ARRESTING GEAR WIRE SUPPORT AND DOUBLE CONTROLS WITH NON DUAL CYLINDER TO OPERATE CAM FOR EACH WIRE SUPPORT NUMBERS WHEN REFERRED TO ARE NAVAL AIRCRAFT FACTORY DRAWINGS
2. ARRANGEMENT, QUANTITY AND TYPE OF ALL ITEMS SHALL BE INSTALLED UNDER COGNIZANCE OF THE INSTALLING ACTIVITY TO SUIT LOCAL CONDITIONS
3. NAME PLATES SHOWING WIRE UP, NEUTRAL AND WIRE DOWN, AND STOPS FOR LIMITING POSITION OF LEVERS, ALSO NAME PLATES DESIGNATING NUMBER OF WIRE CONTROLLED BY EACH LEVER SHALL BE FURNISHED BY THE INSTALLING ACTIVITY
4. INLET LINES SHALL BE PROVIDED BY THE INSTALLING ACTIVITY WITH SHUT OFF VALVE AND SUITABLE STRAINER TO PREVENT FOREIGN MATTER OR EXCESSIVE MOISTURE FROM ENTERING PIPING SYSTEM
5. (D) FOR NEW INSTALLATIONS USE WIRE SUPPORT DWGS 4 [illegible] AND 4 [illegible] FOR EXISTING INSTALLATIONS USE WIRE SUPPORT DWGS 4 [illegible] AND [illegible] 817
6. (C) MOUNTING PLATE IS INTENDED TO PERMIT INTERCHANGEABLE MOUNTING OF AIR CYLINDERS FROM VARIOUS MANUFACTURERS WHOSE DIMENSIONS FALL WITHIN THE LIMITS SHOWN ON NAEP DWG NO 42-4 726 THE PLATE MAY HAVE TO HAVE ADDITIONAL HOLES TAPPED IN IT TO ACCOMMODATE SOME REPLACEMENT CYLINDERS
7. (C) PROVIDE SPACERS AS REQUIRED BETWEEN AIR CYLINDER AND MOUNTING PLATE DRILL THRU SPACERS AND TAP INTO MOUNTING PLATE TO MATCH LOCATION AND SIZE OF MOUNTING HOLES IN AIR CYLINDER MOUNT AIR CYLINDER ON PLATE CENTERLINE. INSTALLING ACTIVITY SHALL SUPPLY SPACERS
8. THE 200 PSI AIR SUPPLY PROVIDED BY INSTALLING ACTIVITY MUST NOT DROP BELOW 175 PSI MAXIMUM REQUIREMENT IS 225 PSI. THIS AIR REQUIREMENT MUST BE PIPED FROM A MEDIUM PRESSURE AIR LINE WITH AN AIR STATION INSTALLED TO PROVIDE THE ABOVE AIR REQUIREMENTS
9. (E) THE INSTALLING ACTIVITY SHALL PROVIDE AN AIR PRESSURE GAUGE WITH RANGE OF 0 TO 300 PSI CONNECTED TO THE WIRE SUPPORT AIR SUPPLY MANIFOLD, LOCATED AT THE ARRESTING GEAR CONTROL PANEL
10. VALVES AND RELATED HARDWARE TO BE FURNISHED BY THE INSTALLING ACTIVITY
11. THIS DRAWING IS TO BE USED IN CONJUNCTION WITH MARK 7 ARRESTING GEAR SERVICE CHANGE NO 264 AND NO 265

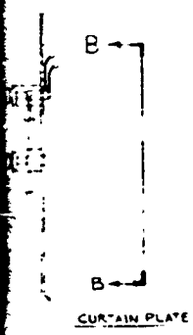

POSITION OF CONTROL LEVER WIRE SUPPORTS UP

POSITION OF LEVERS WIRE SUPPORTS LOCKED IN UP OR DOWN POSITION

POSITION OF CONTROL LEVERS WIRE SUPPORTS DOWN

REFERENCE PLANS

1. WIRE SUPPORT-ASSY-(STEEL DECK TYPE) - 41-61247 ([illegible])
2. WIRE SUPPORT-ASSY-(WOOD DECK TYPE) - 41-61249 ([illegible])
3. CONTROLS-DECK EDGE-ASSY - 41-60347
4. AIR CYLINDER-ASSY - 42-40726
5. WIRE SUPPORT-ASSY (STEEL DECK TYPE) - 41-60370 ([illegible])
6. (C) WIRE SUPPORT ASSY (WOOD DECK TYPE) - 41-60[illegible] ([illegible])

CLASSIFICATION OF CHARACTERISTICS	
CRITICAL	C TO C
MAJOR	M TO M
MINOR	ALL OTHER CHARACTERISTICS

GRAY
WEIL
WEIL
WIRE SUPPORT & CONTROLS
INDIVIDUAL CYLINDER TYPE
TYPICAL INSTALLATION
NAVAL AIRCRAFT FACTORY
40-61298

List 250, 250-1, 250-2, 251, 252 (C)

40-61298

FIGURE 14

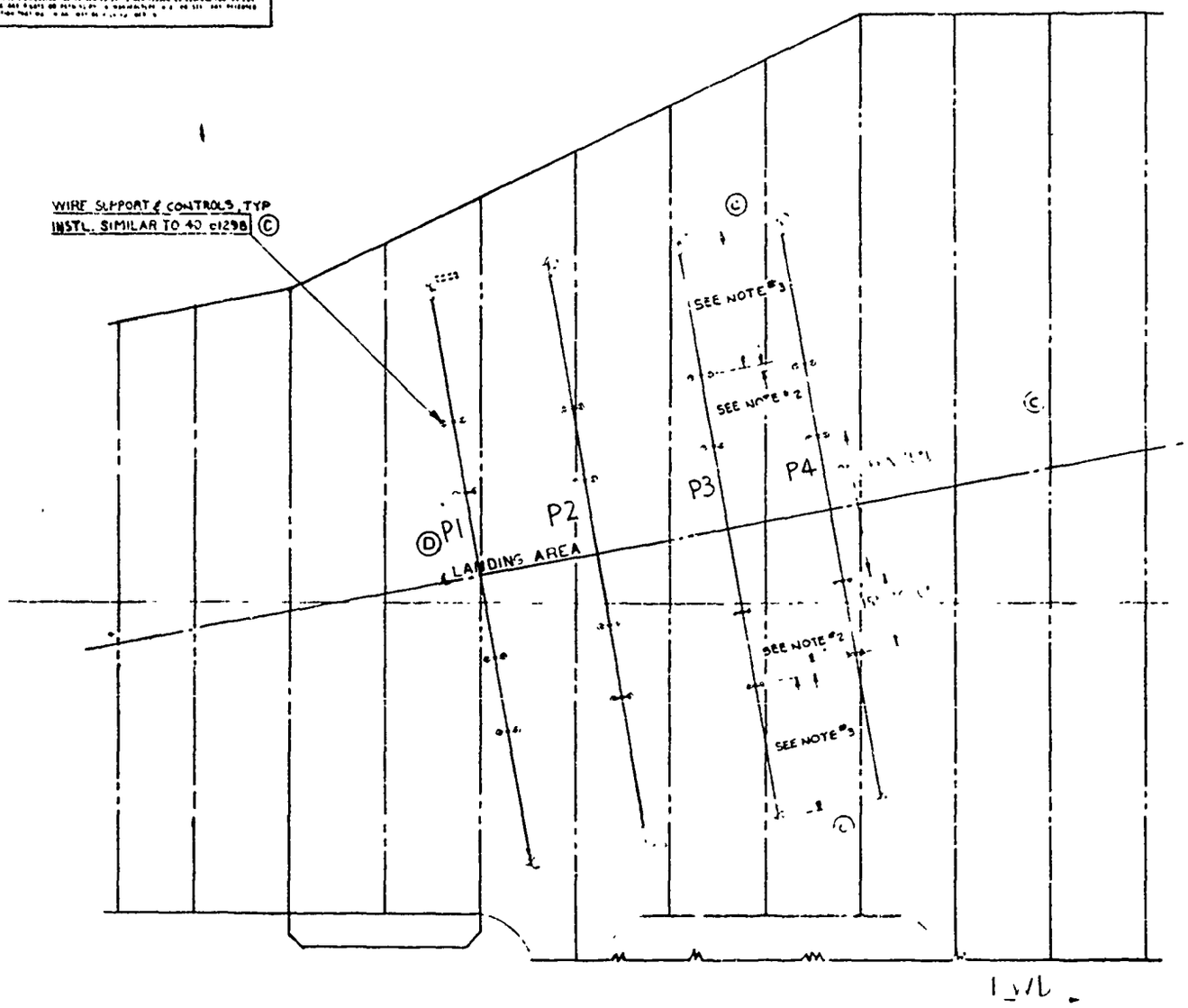
WIRE SUPPORT & CONTROLS, TYP
INSTL. SIMILAR TO 40 c1298 (C)
(C)
SEE NOTE #3
SEE NOTE #2
P1
P2
P3
P4
(D)
LANDING AREA
SEE NOTE #2
SEE NOTE #3
(C)
(C)

(C)

REVISIONS			
SYM	DESCRIPTION	DATE	APPROVAL
A	ON DWG "DETAIL A" 406726-1 WAS 3/8 DIA ON 1100 & RECESS IN DECK, ADDED 3/8 WELD, REMOVED 1/16 DIM. DELETED [illegible] E. KIMBRE	10/9/[illegible]	[illegible]
B	ON DWG IN DETAIL "A" 406332-1 WAS 406726-1, ADDED 1/8 DIM. E. CASEY	8/28/7[illegible]	[illegible]
C	ON DWG NOTE "WIRE SUPPORTS AND CONTROLS TYP INSTL. SIMILAR TO 40-61256 NAV WIRE SUPPORT INSTL SIMILAR TO 40 60348, REMOVED OUT BOARD WIRE SUPPORTS FROM EACH PENDANT POSITION, B/B-1 & B/B-2 AND DETAIL A. IN NOTES IN NOTE 1 [illegible] WAS ADDED NOTE 4. IN TITLE BLOCK TITLE WAS INSTALLATION DATA WIRE SUPPORTS & DELTA ANCHORS VA 69 CLASS CALEB [illegible]	1/24/[illegible]	[illegible]
D	SEE REVISION NOTE BARBELLA	[illegible]	[illegible]

NOTES

(C) 1. PROVIDE 25" MIN TO 30" MAX BOX MAT'L FOR ANCHOR WELDING AS SHOWN ABOVE & STAGGER WIRE SUPPORTS APPROX 18IN APART AT ALTERNATE PENDANT POSITIONS

(C) 3. THE ENTRANCE & EXIT TRUNNION SUPPORTS WILL BE LOCATED NOT LESS THAN 20" FROM THE [illegible] OF THE [illegible] HEAVES

(C) 4. THE NUMBER AND ARRANGEMENT OF PENDANT POSITIONS, AND WIRE SUPPORTS TO BE UNDER THE COGNIZANCE OF NAV AIR AND SUBJECT TO APPROVAL OF NAEC

502942

502942 INSTALLATION DATA

DRAWN	F J GULD	5-23-56	INSTALLATION DATA
CHECKED	HENACKER	[illegible]	WIRE SUPPORTS
[illegible]	[illegible]	[illegible]	ARMORED DECK CARRIERS
[illegible]	[illegible]	[illegible]	MK 7 MOD 1, 2 & 3 (C) (D)
[illegible]	[illegible]	[illegible]	NONE
[illegible]	KAUFMAN	[illegible]	

NAVAL AIR FACILITY

502942

CODE 86063

Flight Deck Arresting Gear And Barricade Configuration Criteria For Mark 7 Mod 3 Arresting Engine

NAEC-ENG-7593
AIRTASK 00480
9126 - 2293

This report presents information regarding flight deck arresting gear & barricade configuration criteria for the Mk. 7 Mod. 3 arresting engines and is provided for use in the preparation of installation plans for new aircraft carriers or on present carriers planning utilization of Mk. 7 Mod. 3 arresting gear.

Flight Deck Arresting Gear And Barricade Configuration Criteria For Mark 7 Mod 3 Arresting Engine

NAEC-ENG-7593
AIRTASK 00480
9126 - 2293

This report presents information regarding flight deck arresting gear & barricade configuration criteria for the Mk. 7 Mod. 3 arresting engines and is provided for use in the preparation of installation plans for new aircraft carriers or on present carriers planning utilization of Mk. 7 Mod. 3 arresting gear.

Flight Deck Arresting Gear And Barricade Configuration Criteria For Mark 7 Mod 3 Arresting Engine

NAEC-ENG-7593
AIRTASK 00480
9126 - 2293

This report presents information regarding flight deck arresting gear & barricade configuration criteria for the Mk. 7 Mod. 3 arresting engines and is provided for use in the preparation of installation plans for new aircraft carriers or on present carriers planning utilization of Mk. 7 Mod. 3 arresting gear.

Flight Deck Arresting Gear And Barricade Configuration Criteria For Mark 7 Mod 3 Arresting Engine

NAEC-ENG-7593
AIRTASK 00480
9126 - 2293

This report presents information regarding flight deck arresting gear & barricade configuration criteria for the Mk. 7 Mod. 3 arresting engines and is provided for use in the preparation of installation plans for new aircraft carriers or on present carriers planning utilization of Mk. 7 Mod. 3 arresting gear.

UNCLASSIFIED

Security Classification

DOCUMENT CONTROL DATA - R & D

(Security classification of title, body of abstract and indexing annotation must be entered when the overall report is classified)

1. ORIGINATING ACTIVITY *(Corporate author)* Naval Air Engineering Center, Phila., Pa. 19112	2a. REPORT SECURITY CLASSIFICATION Unclassified 2b. GROUP None

3. REPORT TITLE

Flight Deck Arresting Gear And Barricade Configuration Criteria For Mark 7 Mod 3 Arresting Engine

4. DESCRIPTIVE NOTES *(Type of report and inclusive dates)*

None

5. AUTHOR(S) *(First name, middle initial, last name)*

Charles Glessner / Salvatore T. Cane

6. REPORT DATE	7a. TOTAL NO. OF PAGES 30	7b. NO. OF REFS None
8a. CONTRACT OR GRANT NO. N00156-69-A-0017 b. PROJECT NO. AIRTASK 00480-9126-2293 c. d.	9a. ORIGINATOR'S REPORT NUMBER(S) NAEC-ENG-7593 9b. OTHER REPORT NO(S) *(Any other numbers that may be assigned this report)* None	

10. DISTRIBUTION STATEMENT

Each transmittal of this document outside the Department of Defense must have prior approval of the Commander, Naval Air Systems Command.

11. SUPPLEMENTARY NOTES None	12. SPONSORING MILITARY ACTIVITY Naval Air Systems Command

13. ABSTRACT

This report presents information regarding flight deck arresting gear and barricade configuration criteria for the Mark 7 Mod 3 arresting engines and is provided for use in the preparation of installation plans for new aircraft carriers or on present carriers planning utilization of the Mark 7 Mod 3.

DD FORM 1 NOV 65 1473 (PAGE 1)

S/N 0101-807-6801

Unclassified

Security Classification

INSTRUCTIONS TO FILL OUT DD FORM 1473 - DOCUMENT CONTROL DATA
(See ASPR 4-211)

1. ORIGINATING ACTIVITY: Enter the name and address of the contractor, subcontractor grantee, Department of Defense activity or other organization *(corporate author)* issuing the report.

2a. REPORT SECURITY CLASSIFICATION: Enter the overall security classification of the report. Indicate whether "Restricted Data" is included. Marking is to be in accordance with appropriate security regulations.

2b. GROUP: Automatic downgrading is specified in DoD directive 5200.10 and Armed Forces Industrial Security Manual. Enter the group number. Also, when applicable, show that optional markings have been used for Group 3 and Group 4 as authorized.

3. REPORT TITLE: Enter the complete report title in all capital letters. Titles in all cases should be unclassified. If a meaningful title cannot be selected without classification, show title classification in all capitals in parenthesis immediately following the title.

4. DESCRIPTIVE NOTES: If appropriate, enter the type of report, e.g., interim, progress, summary, annual, or final. Give the inclusive dates when a specific reporting period is covered.

5. AUTHOR(S): Enter the name(s) of the author(s) in normal order, e.g., full first name, middle initial, last name. If military, show grade and branch of service. The name of the principal author is a minimum requirement.

6. REPORT DATE: Enter the date of the report as day, month, year; or month, year. If more than one date appears on the report, use date of publication.

7a. TOTAL NUMBER OF PAGES: The total page count should follow normal pagination procedures, i.e., enter the number of pages containing information.

7b. NUMBER OF REFERENCES: Enter the total number of references cited in the report.

8a. CONTRACT OR GRANT NUMBER: If appropriate, enter the applicable number of the contract or grant under which the report was written.

8b, 8c, and 8d. PROJECT NUMBER: Enter the appropriate military department identification, such as project number, task area number, systems numbers, work unit number, etc.

9a. ORIGINATOR'S REPORT NUMBER(S): Enter the official report number by which the document will be identified and controlled by the originating activity. This number must be unique to this report.

9b. OTHER REPORT NUMBER(S): If the report has been assigned any other report numbers *(either by the originator or by the sponsor)*, also enter this number(s).

10. DISTRIBUTION STATEMENT: Enter the one distribution statement pertaining to the report.

Contractor-Imposed Distribution Statement

The Armed Services Procurement Regulations *(ASPR), para 9-203* stipulates that each piece of data to which limited rights are to be asserted must be marked with the following legend:

"Furnished under United States Government Contract No._____. Shall not be either released outside the Government, or used, duplicated, or disclosed in whole or in part for manufacture or procurement, without the written permission of _____., except for: (i) emergency repair or overhaul work by or for the Government, where the item or process concerned is not otherwise reasonably available to enable timely performance of the work; or (ii) release to a foreign government, as the interests of the United States may require; provided that in either case the release, use, duplication or disclosure hereof shall be subject to the foregoing limitations. This legend shall be marked on any reproduction hereof in whole or in part."

A22201

If the above statement is to be used on this form, enter the following abbreviated statement:

"Furnished under U. S. Government Contract No._____. Shall not be either released outside the Government, or used, duplicated, or disclosed in whole or in part for manufacture or procurement, without the written permission of_____, per ASPR 9-203."

DoD Imposed Distribution Statements *(reference DoD Directive 5200.20)* "Distribution Statements *(Other than Security)* on Technical Documents," March 29, 1965.

STATEMENT NO. 1 - Distribution of this document is unlimited.

STATEMENT NO. 2 (UNCLASSIFIED document) - This document is subject to special export controls and each transmittal to foreign governments or foreign nationals may be made only with prior approval of *(fill in controlling DoD office)*.

(CLASSIFIED document) - In addition to security requirements which must be met, this document is subject to special export controls and each transmittal to foreign governments or foreign nationals may be made only with prior approval *(fill in controlling DoD Office)*.

STATEMENT NO. 3 (UNCLASSIFIED document) - Each transmittal of this document outside the agencies of the U. S. Government must have prior approval of *(fill in controlling DoD Office)*.

(CLASSIFIED document) - In addition to security requirements which apply to this document and must be met, each transmittal outside the agencies of the U. S. Government must have prior approval of *(fill in controlling DoD Office)*.

STATEMENT NO. 4 (UNCLASSIFIED document) - Each transmittal of this document outside the Department of Defense must have prior approval of *(fill in controlling DoD Office)*.

(CLASSIFIED document) - In addition to security requirements which apply to this document and must be met, each transmittal outside the Department of Defense must have prior approval of *(fill in controlling DoD Office)*.

STATEMENT NO. 5 (UNCLASSIFIED document) - This document may be further distributed by any holder only with specific prior approval of *(fill in controlling DoD Office)*.

(CLASSIFIED document) - In addition to security requirements which apply to this document and must be met, it may be further distributed by the holder ONLY with specific prior approval of *(fill in controlling DoD Office)*.

11. SUPPLEMENTARY NOTES: Use for additional explanatory notes.

12. SPONSORING MILITARY ACTIVITY: Enter the name of the departmental project office or laboratory sponsoring *(paying for)* the research and development. Include address.

13. ABSTRACT: Enter an abstract giving a brief and factual summary of the document indicative of the report, even though it may also appear elsewhere in the body of the technical report. If additional space is required, a continuation sheet shall be attached.

It is highly desirable that the abstract of classified reports be unclassified. Each paragraph of the abstract shall end with an indication of the military security classification of the information in the paragraph, represented as *(TS)*, *(S)*, *(C)*, or *(U)*.

There is no limitation on the length of the abstract. However, the suggested length is from 150 to 225 words.

14. KEY WORDS: Key words are technically meaningful terms or short phrases that characterize a report and may be used as index entries for cataloging the report. Key words must be selected so that no security classification is required. Identifiers, such as equipment model designation, trade name, military project code name, geographic location, may be used as key words but will be followed by an indication of technical context. The assignment of links, roles, and weights is optional.

DISCLAIMER NOTICE

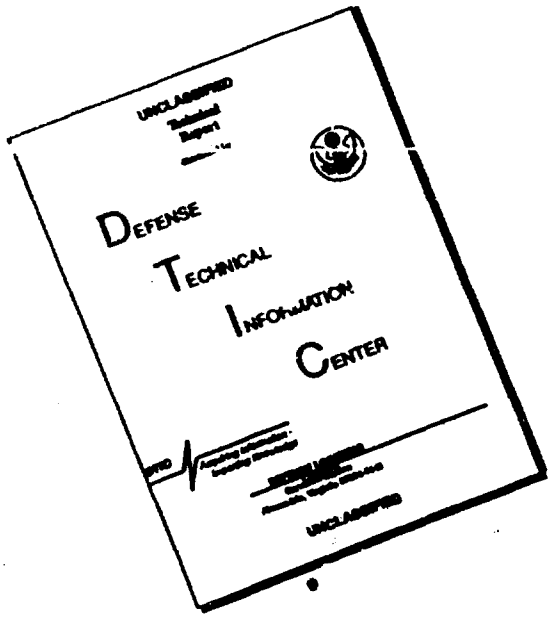

THIS DOCUMENT IS BEST QUALITY AVAILABLE. THE COPY FURNISHED TO DTIC CONTAINED A SIGNIFICANT NUMBER OF PAGES WHICH DO NOT REPRODUCE LEGIBLY.