UNCLASSIFIED

AD NUMBER

AD861496

NEW LIMITATION CHANGE

TO

Approved for public release, distribution unlimited

FROM

Distribution authorized to U.S. Gov't. agencies and their contractors; Administrative/Operational Use; 17 AUG 1969. Other requests shall be referred to Office of the Adjutant General, Department of the Army, Washington, DC 20310.

AUTHORITY

AGO D/A ltr dtd 29 Apr 1980

THIS PAGE IS UNCLASSIFIED

THIS REPORT HAS BEEN DELIMITED
AND CLEARED FOR PUBLIC RELEASE
UNDER DOD DIRECTIVE 5200.20 AND
NO RESTRICTIONS ARE IMPOSED UPON
ITS USE AND DISCLOSURE.

DISTRIBUTION STATEMENT A

APPROVED FOR PUBLIC RELEASE;
DISTRIBUTION UNLIMITED.

AD 861496

DEPARTMENT OF THE ARMY
OFFICE OF THE ADJUTANT GENERAL
WASHINGTON, D.C. 20310

IN REPLY REFER TO

AGDA (M) (22 Oct 69) FOR OT UT 693297 31 October 1969

SUBJECT: Operational Report - Lessons Learned, Headquarters, 1st Signal Brigade (USASTRATCOM), Period Ending 31 July 1969

SEE DISTRIBUTION

1. Subject report is forwarded for review and evaluation in accordance with paragraph 5b, AR 525-15. Evaluations and corrective actions should be reported to ACSFOR OT UT, Operational Reports Branch, within 90 days of receipt of covering letter.

2. Information contained in this report is provided to insure appropriate benefits in the future from lessons learned during current operations and may be adapted for use in developing training material.

BY ORDER OF THE SECRETARY OF THE ARMY:

Kenneth G. Wickham

KENNETH G. WICKHAM
Major General, USA
The Adjutant General

1 Incl
as

DISTRIBUTION:
Commanding Generals
US Continental Army Command
US Army Combat Developments Command
Commandants
US Army War College
US Army Command and General Staff College
US Army Air Defense School
US Army Armor School
US Army Aviation School
US Army Engineer School
US Army Field Artillery School
US Army Infantry School
US Army Signal School
US Army Southeastern Signal School
US Army Special Warfare School

DDC
RECEIVED
NOV 20 1969
B

UNCLASSIFIED REPORT
DISTRIBUTION NO FOREIGN WITHOUT APPROVAL OF ASSISTANT CHIEF OF STAFF FOR FORCE DEVELOPMENT (ARMY) ATTN FOR OT UT. WASHINGTON, D.C. 20310

Reproduced by the
CLEARINGHOUSE
for Federal Scientific & Technical
Information Springfield Va. 22151

33

DEPARTMENT OF THE ARMY
HEADQUARTERS, 1ST SIGNAL BRIGADE (USASTRATCOM)
APO San Francisco 96384

SCCPV-OP-SD 17 August 1969

SUBJECT: Operational Report of Headquarters, 1st Signal Brigade (USASTRATCOM) for Period Ending 31 July 1969, RCS CSFOR-65 (R1)

TO: SEE DISTRIBUTION

1. Section 1, Operations: Significant Activities

a. During the period of this report the 1st Signal Brigade was operational in performing its mission of providing communications-electronics support for free world forces located throughout Vietnam and Thailand. The Brigade (less 29th Signal Group) continued to perform its mission under the operational control of CG, United States Army Vietnam while remaining under the command of CG, United States Army Strategic Communications Command-Pacific. The 29th Signal Group remained under the operational control of United States Army Support-Thailand and the command of 1st Signal Brigade. The 1st Signal Brigade was operational during the entire 92 day reporting period.

b. The 1st Signal Brigade provided communications support for the redeployment of the 9th Infantry Division, the visit of the Secretary of State in late May and the visit of President Nixon in late July. This support provided a communications package responsive to the needs and requirements of each situation.

c. The organization of the 1st Signal Brigade Headquarters is attached as inclosure 1.

d. The ICTZ Signal Group (Prov) was redesignated the 12th Signal Group. The present organization of the 1st Signal Brigade is attached as inclosures 2a to 2g.

e. Battalion areas of responsibility are shown in inclosures 3a to 3e.

f. The morning report strength of the 1st Signal Brigade (including the 29th Signal Group in Thailand) as of 31 July 1969 was 18,340.

g. Significant organizational activities that occurred within each directorate and staff section are detailed below:

(1) Personnel and Training Directorate.

FOR OT UT
693297
Inclosure

(a) In order to help alleviate the problem of insufficient functional training personnel requisitions, as reported in the last ORLL, 1st Signal Brigade Reg 350-4, Functional Training, was revised and distributed on 1 July 1969. In addition, personal contact was made with personnel and training officers at group level, to further enhance their understanding of the functional training program as it exists in CONUS and 1st Signal Brigade.

(b) Close coordination with the Maintenance Branch, Material Division of the 1st Logistical Command enabled the 1st Signal Brigade to provide critically required on-site AN/PPS-5 Ground Surveillance Radar Training to the 1st Cavalry Division and the 25th Infantry Division.

(c) Due to a lack of requirements for the training, the TSEC/KL-7 Maintenance Course at the USATF was suspended in July 1969.

(d) During the month of June 1969, an intensive contractor supported OJT program was conducted at 1st Signal Brigade DCO/DTE's to further enhance the abilities of military DCO repairmen prior to the assumption of O&M by the military on 1 July 1969.

(e) On 4 June 1969 a revised edition of the 1st Signal Brigade Training Plan for RVN O&M of ICS, DTE and Tandem Switches was distributed. The revised plan provides for a reduction in time required to complete the training and overall cost associated with the training.

(f) A program was established within the Personnel Management Division to assure that enlisted requisitions being submitted were accurately identifying requirements for Additional Skill Identifiers (ASI). Previously requisitions were being submitted with the ASI code omitted or with obsolete ASI codes. Close coordination was established with the requisition preparing agencies to assure that either updated or correct information was being submitted. A detailed examination of all present and future requirements was coordinated with the Training Division, P&T Directorate to assure that the information on the requisition was compatible with forecasted requirements. Errors in submission to this headquarters were corrected by thorough examination of each commands input. When additional requirements became known for personnel not reflected in the current submission, immediate action was taken to update the requisition to include these requirements. The implementation of these procedures and the placing of additional emphasis in this critical area will result in the more efficient utilization of available resources and will assure continuity of operations, so vital to the operational requirements of this headquarters.

(2) Operations Directorate.

(a) During the current quarter, the Brigade AUTODIN System was reconfigured to provide better subscriber service and to minimize traffic backlogs. The Nha Trang NARC was deactivated, thereby eliminating the last manual data relay in Vietnam. All of the former NARC tributaries that still have a data traffic requirement receive service via AUTODIN, either directly or over the counter. A schedule of projected Digital Subscriber Terminal Equipment (DSTE) arrivals were received from STRATCOM. Planning continues for installation and operation of DSTE, the first of which are due in November.

(b) In an effort to obtain an effective and concise system/circuit analysis reporting system 1st Signal Brigade Regulation 105-5 was put into effect on 1 May 1969. This regulation precluded any other higher command reporting requirements for all Army Communication Centers and Minor Relay Stations in the Republic of Vietnam. Although this regulation was widely disseminated and redistributed on 25 June 1969 due to many errors encountered in reporting, interpretation was found to be extremely difficult at the lower echelons. A meeting with the signal group representatives on 25 June 1969 was held and as a result of that meeting a much clearer understanding was gained by all groups.

(c) In June an extensive analysis of path and channel outages for the period 1 June 1968 through 1 June 1969 was completed. Of primary interest the indicators used showed that the average circuit restoral of all priority circuits improved during FY 69. Priority one circuit average restoral time improved 50%. Path outage average restoral time has declined and appears to follow a cyclical trend. Factors that coincide with the apparent cyclical trend include: weather, periods of intense enemy activity, personnel peaks and declines, and periods of major communications effort to include the impact of the Tandem Switch Project.

(3) Communications Systems Engineering and Management Agency.

(a) The February 1969 edition of Overseas AUTOVON Pacific Network Configuration Subscriber List (DCA Circular 370-V185-5) validated and scheduled seven common user AUTOVON Circuits for activation during AUTOVON Cutover I on 1 March 1969 between the Phu Lam JOSS and the Wahiawa Switch. During the period 3-5 Mar 69 only four of the seven circuits were activated. An additional circuit was cutover during the last quarter (May 69). This provides a total of five circuits between Vietnam and the AUTOVON Gateway Switch at Wahiawa. Of the remaining two circuits, one is being held in abeyance until after AUTOVON Cutover II (1 Nov 69) pending a decision to retain it as a dedicated AUTOSEVOCOM Circuit. The final circuit, which will make a total of six common user circuits between Phu Lam and Wahiawa is scheduled for cutover during the first week of the next quarter. During the last quarter, Automatic Electric Companies (AECO) completed their installation efforts

of the remaining eleven Multi Level Precedence Preemption (MLPP) Applique Units at the Phu Lam JOSS and the final two MLPP Units for Bangkok were installed by military installers. In the interest of determining status on all SEA Cutover II circuits that will access the DAU (Philippines) Switch on 1 Nov 69, DCA-SEA requested Brigade have in attendance representatives at the monthly Regional AUTOVON Cutover Committee and DAU Regional Overseas AUTOVON Testing Committee meetings. A Brigade representative has attended these meetings each month during the last quarter. Circuit testing and conditioning of the thirty-two AUTOVON circuits between SEA and the DAU switch began last quarter. Initially, all circuit testing and conditioning was scheduled to be completed on or before 1 Aug 69. However due to new leased circuits not being made available before 1 Oct 69, the time frame in which the Nha Trang Tandem will be activated, malfunctions of test equipment at the DAU Switch, and presidential preemptions of certain circuits, the 1 Aug 69 test/conditioning date will not be met. Approximately forty percent of all SEA circuits accessing the DAU Switch were tested and accepted during the last quarter.

(b) Four AN/TSC-82 recoverable microwave terminals were installed at Dong Ha, Di An, Dong Ba Thin, and Sa Dec.

(c) Four AN/GRC-170 Low Level Shelters were installed on the Vung Tau - Pleiku, and Phu Lam - Nha Trang AN/MRC-85 links.

(d) During the fourth Quarter FY 69, four AUTODIN terminals were installed and activated. These were: The interim, shelter-mounted Mode V terminal at Cu Chi; the second interim, fixed Mode V terminal at IFFV (Nha Trang); the interim, van-mounted Mode I terminal at Dong Tam; and the interim, fixed Mode I terminal at Qui Nhon Log Support Command.

(e) The publishing of the USARV LOI-1 on 31 Dec 68, implemented a program to reconfigure the AUTODIN/Teletype system in Vietnam into an automatic relay system. During the third quarter FY 69, the reconfiguration of the Nha Trang ACC into the first of seven minor relays was completed. During the fourth Quarter FY 69, installation began on the Long Binh Major Relay, the only Major Relay in this new system and on the Cu Chi Minor Relay. Further, the Korat AMARS system was moved to the Long Binh Relay, and rehabilitation of the facility was begun.

(f) Of the nine Tandem Switching Centers planned for SEA to link and provide automatic switching for approximately forty-eight dial telephone exchanges, four are now completely operational. During the Fourth Quarter FY 69, the Tandem Switching Center at Da Nang was activated. Activation was partially effected at the Nha Trang and Tan Son Nhut Tandem Switching Centers; however, these facilities will not be fully activated until the first quarter FY 70.

(g) Within Vietnam seventeen Army fixed-plant Dial Telephone Exchanges were planned. Of these, fifteen have been installed and are now operational. During the fourth quarter FY 69, one exchange, at Dong Tam, was cancelled, and two exchanges at Plantation (Long Binh North) and Camp Enari were placed into operation. One last Dial Telephone Exchange at Phu Tai is planned for Vietnam and is scheduled for activation during the first quarter FY 70.

(h) During the fourth quarter FY 69, the installation of the Outside Plant Project for the Phu Tai DTE was completed which required the installation of 103,000 feet of multipair cable. Further, engineering was completed on eleven projects totaling 300,000 feet of multipair cable.

(i) Emergency Action Console Systems:

MACV EAC System experienced severe outages leading to dispatch of a North Electric Company field representative under contract to repair, align and conduct training. Both MACV and MACTHAI systems required alignment of line and link transmission amplifiers. Field modifications directed since initial installation were installed or checked. Routine maintenance faults were corrected. Factory logic for AUTOVON interface was corrected for correct line disconnect on inward pre-empt. PLL and critical items were verified. A 30 day school for repairman was conducted.

(4) Southeast Asia Telephone Management Agency.

(a) During the past quarter the Southeast Asia Telephone Management Agency (SEA TELMA) has been heavily involved in the planning of the Southeast Asia Automatic Telephone System (SEA ATS). 5 officers and 3 enlisted men have been on continuous TDY to the Joint Cutover Integrated Working Group (JCIWG) in Bangkok, Thailand. These personnel have been engaged in preparation and issuance of detailed cutover plans for the tandem switches. Personnel from SEA TELMA have also been engaged in supervision of the actual cutover of the Tan Son Nhut and Nha Trang Tandem Switches. SEA TELMA has continued to provide plant-in-place drawing and requested assistance in support of JCIWG.

(b) During this quarter DCA SAM has assumed the responsibility for the management of the tandem switches and the SEA ATS. Eventually, DCA SAM will assume the responsbility for analysis of all trunk requirements. Until such time that DCA SAM has sufficient personnel to perform this task, SEA TELMA will continue to compile and analyze secondary trunking data. There has been no date set by DCA SAM for assuming this responsibility.

(c) During last quarter the Traffic Branch has initiated requests for additional secondary trunking in the Tan Son Nhut Tandem Area. The activation of these additional secondary trunks will provide greatly improved

telephone service within the Tan Son Nhut Tandem Area. It is also anticipated that these additional secondary trunks will considerably reduce usage on primary trunks. The Traffic Branch is continuing to collect traffic data on secondary trunking by using two portable traffic usage recorders.

(d) During this quarter the Traffic Branch has actively assisted subordinate as well as high headquarters by providing special traffic studies on request. It is anticipated that the requirement to provide these traffic studies will increase in the future.

(e) SEA TELMA Engineering Branch is continuing to provide technical and engineering assistance to the operating units. The Engineering Branch has been actively involved in the cutover of the Plantation, Phu Tai, and Phuoc Vinh DTE's. It has been the objective of the SEA TELMA cutover team to evaluate the progress of these cutovers and resolve problem areas encountered in each cutover.

(f) The Engineering Branch has also been actively involved in the contractor OJT program for 36H training. This OJT program was evaluated at all Army DTE's in Vietnam and Thailand. Close coordination with Stromberg Carlson assured the most advantageous use of contractor personnel in the OJT program. Coordination was also established with personnel from the Signal School at Fort Monmouth to assist them in preparation of the Tandem Switch Course to be offered there.

(g) In coordination with CSEMA and LOG, SEA TELMA has initiated planning for the conduct of an inventory of telephone equipment at DTE's throughout Southeastern Asia. When this inventory is completed and reporting procedures are established SEA TELMA will have an up-to-date record of telephone assets. This record of assets will not only facilitate re-engineering of telephone facilities, but will also provide SEA TELMA with the ability to redistribute equipment. Ultimately, through the use of assets control a more equitable distribution of equipment will be provided.

(5) PLANS Directorate

(a) OPLAN 88-69 (Phase-down/Phase-out of Teletypewriter and Manual Data Relays) was published 1 May 1969 and provides for the phasing down and/or phasing out of the Nha Trang TTY Relay and NARC, the Da Nang TTY Relay, and the Phu Lam TTY Relay. This fulfills the USASTRATCOM-PAC tasking to develop phase-down/phase-out plans.

(b) The plans listed below were rescinded on 16 June 1969 as a result of MACV's rescinding COMUSMACV Communications Restoral Plan-RVN 1-68. DCA-SAM is currently publishing transmission and station restoral plans.

1. OPLAN 5-68 (Phu Lam Contingency Plan) provided for the restoration of communications in the event the Phu Lam Facility was partially or totally lost due to enemy actions or natural phenomena.

2. OPLAN 8-69 (Contingency Teams) established MACV Quick Reaction Teams and identified specific transportable communications equipment as contingency assets.

(c) OPLAN 70-70 (Disaster Relief Plan) provides communications support for Disaster Relief Forces which would be employed throughout RVN in the event of a natural disaster. In accordance with the review schedule, 1st Signal Brigade OPLAN 70-69 was revised to incorporate numerous changes. It was republished as OPLAN 70-70 on 14 July 1969.

(d) LOI 6 (Headquarters USARV C-E Requirements) defines the communications electronics requirements of Headquarters, United States Army Vietnam at Long Binh and assigns the mission responsibility to CO, 160th Signal Group. LOI 6 was finalized and published on 24 July 1969.

(e) OPLAN 94-69 (Work Stoppage, Saigon Port) provides for truck drivers, supervisors, and emergency communications support from 1st Signal Brigade resources in the event of a civilian work stoppage at the Saigon Port. The plan was published on 23 May 1969.

(f) OPLAN 69-69 (Post Hostilities Plan) will provide guidance for the withdrawal of 1st Signal Brigade units following cessation of hostilities in Vietnam. Drafting of the plan began in June and the target date for publication is 15 August 1969.

(g) First package Brigade reorganization documents with the exception of HHC, 63d Sig Bn were approved by DA, effective 15 Jun 69. Force Development has received General Orders for HHC, 1st Signal Bde, 12th Sig Gp, 29th Sig Gp Aug, 302d Sig Bn, 325th Sig Bn, 361st Sig Bn, 369th Sig Bn, 379th Sig Bn, HHD, 442d Sig Bn, 518th Sig Co, Vung Chua Mtn Det, CCEAT and EEAT. Approved documents for the 361st and 369th Sig Bn's have also been received. DA directed that the reorganization take place within current resources. The documents did not exceed current personnel authorizations, however, there were many overages in equipment. Force Development performed an equipment Quantitative and Qualitative Analysis (Q&QA) comparing the current and the proposed. The Groups were directed to justify the overages. These justifications were subsequently sent to the Force Development work group at HQ, USASTRATCOM, and to DA. Any overages not adquately justified were removed from the documents at USASTRATCOM. All documents in packages II, III and IV are in the final processing stages at USASTRATCOM and are being sent to DA as they are completed.

(h) The six incoming MW/TS (Microwave and Tropospheric Scatter) teams have closed in Vietnam as follows:

UNIT	DATE CLOSED
33d SG Det (MW/TS)	8 July 1969
36th SC Det (MW/TS)	8 July 1969
51st SC Det (MW/TS)	8 July 1969
211th SC Det (MW/TS)	8 July 1969
220th SC Det (MW/TS)	10 July 1969
221st SC Det (MW/TS)	9 July 1969

The organization of each team is the same, consisting of 8 EM as follows:

AUTH	MOS	RANK	DUTY ASSIGNMENT
1	26L40	E7	Team Chief
1	26L40	E6	SR M/W Rpmn
1	26L20	E5	M/W Rpmn
1	32E20	E5	Carrier Rpmn
1	32E20	E5	Carrier Rpmn
1	26L10	E4	Sr M/W Attendant
1	52B20	E4	Powerman
1	26L10	E3	M/W Attendant

All teams are at full strength and employ an AN/TRC-129 which provides a 24 channel MW & TS capability. Four of the teams (36th, 211th, 220th, and 221st) will install a 48 channel DCS system between Lang Bian Mountain and Cam Ranh Bay. The 36th and the 220th will be stationed on Hill 184 at Cam Ranh Bay, while the 211th and 221st will be stationed at Lang Bian Mountain. This system is required to provide DCS quality channels across the Southern II CTZ in order to provide lateral service (east/west) as well as interlacing (north/south) channelization for routing high priority circuits. Additionally, this link will provide a quality by pass to the key nodal site (Pr'Line) to preclude isolation of high priority combat support circuits in the event of station failure at Pr'Line. The 33d Detachment will be used on a rotational basis to support an AN/TRC-129 rehabilitation program in the 21st Signal Gp, and the 51st Detachment will perform the same mission in the 12th Signal Gp. The 48 enlisted spaces represented by these teams are not included in the reorganization strength. Thus, 1st Signal Brigade in-country ceiling will be increased by 48 spaces.

(6) Intelligence and Security

(a) During the quarter, 414 enemy actions were directed against Brigade installations. Stand-off attacks continue to be the predominant type of attack.

(b) The number of clearances and validations processed during the quarter was 311.

(c) The number of serious incident reports processed during the quarter was 72.

(d) During the past quarter, 14 counterintelligence inspections were conducted by members of the Intelligence and Security Office. Only minor deficiencies were noted.

(e) During the past quarter, nine investigations were initiated for reports of security violations.

(f) This office conducted physical security inspections at 38 signal sites. With few exceptions, all units have made significant improvement in site defense.

(g) The project of installing DUFFLE BAG equipment at isolated signal sites is continuing. At three of the five sites programmed, equipment is operating to increase capability for early warning of enemy infiltration. A survey has been completed to increase the use of sensors at the other site locations.

(7) Comptroller

(a) The Command Budget Estimate was submitted to STRATCOM-PAC on 18 June 1969. Brigade requirements for FY 71 were estimated as follows:

	TOTAL REQ	FINANCED	UNFINANCED
RVN	$3,549,000	$1,894,000	$1,655,000
	3,227,000	1,627,000	1,600,000
	$6,776,000	$3,521,000	$3,255,000

(b) Pending receipt of final FY 69 obligations figures, the computation of FY 69 obligations at this headquarters as of 30 June 1969 revealed that the Brigade obligated $4,448,735 out of a total budget of $4,456,000. The overall obligation rate thus achieved was 99.84%. This analysis includes both allotment 9092 (RVN) and 9082 (Thai).

(c) The FY 70 budget has been received but only for the 1st Quarter thus far. Comparison of these amounts with initial FY 69 figures reveals the following increases:

	FY 69 - 1st Qtr	FY 70 - 1st Qtr	Incr
Allot 9092	$462,000	$577,000	$115,000
Allot 9082	351,000	489,000	138,000
	$813,000	$1,066,000	$253,000

These increases have been necessitated due to greater cost expenditures during FY 69 as compared to FY 68.

(d) The regulation CCPVR 10-1, Organization and Functions Manual, was published in order to update the previous regulation.

(e) The schedule of Review and Analysis presentations for 4th Quarter FY 69 is as follows:

21 Jul 69	2d Signal Group
22 Jul 69	160th Signal Group
22 Jul 69	Regional Communications Group
27 Jul 69	21st Signal Group
28 Jul 69	12th Signal Group
25 Aug 69	29th Signal Group

(f) 1st Signal Brigade Circular CCPVC 335-1 Recurring Reports Register provides a listing of pertinent data for the current reporting requirements of subordinate units to Brigade, and Brigade to higher headquarters.

(g) Preliminary research for the COMSEC Logistics System was completed. This system will provide an accurate inventory accounting method for the COMSEC Logistics Company. A representative of 1st Signal Brigade is TDY to Lexington, Ky COMSEC Depot from 16 Jul 69 to 26 Aug 69 to further define the systems specifications.

(h) Justification for four tape drives to supplement current machine configuration was completed. Communications with STRATCOM-PAC to determine method of procurement was begun.

(i) Southeast Asia Automatic Telephone System is completed and operational except for Vung Chua Mountain, Ubon and Pleiku TSC. System accounts for all the dial telephone exchanges within 1st Signal Brigade and provides traffic analysis information for future engineering requirements.

(j) Communications Electronics Management Information System (CEMIS) RVN Research is completed. CEMIS will provide a worldwide Management Information System to be used by HQ, USASTRATCOM. 1st Signal Brigade inputs will be discussed at Ft. Huachuca with representatives of 1st Signal Brigade and other USASTRATCOM agencies.

(k) Research for C-E Fixed Assets Logistics Accounting System was begun. The compilation of inputs and the determination of required outputs and programs was also begun. This system keeps an accurate inventory of all the C-E equipment in 1st Signal Brigade with a special emphasis on T-Day requirements.

(l) Conversion of Personnel Master File from ASN to SSAN was begun. Due to DA policy eliminating ASN the Personnel Master File (PMF) must be changed. Scheduled completion of conversion was 25 Jul 69.

(m) First prototype run of C-E Fixed Assets Logistics Report was run. Changes were noted, defined and implemented.

(8) Inspector General.

(a) Inspections of the following units were accomplished during the reporting period:

AGI - FY 69, 63rd Signal Battalion	5 - 9 May 1969
AGI - FY 69, 73rd Signal Battalion	19 - 23 May 1969
Reinspection, 595th Signal Company	29 May 1969
AGI - FY 69, 39th Signal Battalion	9 - 13 Jun 1969
AGI - FY 69, 160th Signal Group	18 - 19 Jun 1969
AGI - FY 69, 41st Signal Battalion	23 - 27 Jun 1969
Special Inspection, CAO Saigon	29 - 30 Jun 1969
AGI - FY 70, Phu Lam Signal Battalion	7 - 9 Jul 1969
AGI - FY 70, 972nd Signal Battalion	21 - 25 Jul 1969

(b) Report of Inquiry concerning alleged, but unfounded, non-compliance with Chapter 7, AR 600-200 (Promotion Policy) and racial prejudice within the 1st Signal Brigade was directed and conducted.

(c) A recall interrogation of a member of this command was directed by the Department of the Army Inspector General. The subject concerned an inquiry being made into the alleged irregularities in the hiring and promotions of civilians in the Fort Benning, Ga, Post Photo Lab.

(d) Action on 170 requests for assistance was completed by the Inspector General during the reporting period. Three (3) requests for assistance received during the period are still pending final action.

(9) Engineer

(a) Construction of the Long Binh Area Maintenance & Supply Facility building was completed 15 Jul 69.

(b) The Cu Chi COMMCEN building was accepted with minor deficiencies on 16 Jun 69.

(c) Long Binh COMMCEN was completed on 15 Jun 69.

(d) The revetments at Sa Dec ICS site were begun on 7 Jul 69 and were completed 25 Jul 69.

(e) A survey of air conditioning systems at all major RVN signal sites was completed and forwarded to USASTRATCOM-PAC on 19 Jun 69.

(f) A survey of contractor operated power systems throughout RVN was completed and forwarded to US Army Engineer Construction Agency, Vietnam for an analysis of countrywide power requirements.

(g) Construction of the CSEMA Storage Yard was completed on 20 May 69.

(h) Construction of the Long Binh Telephone Operators Dormitory was completed on 19 May 69.

(i) Construction of the Nha Trang COMSEC Logistic Support Unit was completed on 8 May 69.

(10) Logistics Directorate

(a) During the period 1 May 1969 through 21 July 1969 the final stages of site construction for the AN/TRC-90 rehabilitation program were completed at Klong Toey, Thailand and work was begun on the first six AN/TRC-90A's to be rehabilitated. Collins Radio Company representatives arrived in Thailand on 20 May. The repair facility was turned over to Collins on 31 May 1969. All required local nationals have been hired. All necessary hardware, replacement parts and tools have been ordered. As of the end of the quarter, 60% of the hardware has been received at Klong Toey. 90% of tools and test equipment are on site and shipping data has been received on the remaining 10%. All modification kits and frequency synthesizers were in Thailand by 19 June 1969. The only major item delayed in procurement has been 16 air conditioners which will have a 16 to 18 month lag in delivery. The existing air conditioners are being rebuilt in Okinawa and thus this delay should have minimal effect on the overall project. Six replacement shelters were received in Klong Toey on 14 July. These were S-280 shelters which had not been modified for AN/TRC-90 use. Normally the AN/TRC-90 is housed in the S-141 shelter. It is not known at this time if these shelters can be modified on site. If they cannot, major delays in the program schedule may result. Determination of which AN/TRC-90's will require replacement shelters must be made by Collins representatives after the equipment arrives at the repair facility. Thus at present there is no definite knowledge of when replacement shelters may be required. Work on the first three vans began on 7 Jul 69. Work is progressing smoothly and the rehabilitation should be completed on schedule.

on 24 Aug 69. Three additional AN/TRC-90's are on site and are scheduled for rehabilitation beginning in August. Shipment of vans to Klong Toey is proceeding satisfactorily. No problems are foreseen.

(b) There are presently 26 AN/TRC-97B's in the Army inventroy. Sixteen of these are in the 1st Signal Brigade and the other ten are in I and II Field Force Signal Battalions but supported by 1st Signal Brigade units. These 26 units were transferred from the Air Force during the 2nd quarter 69. Since that time, efforts have been made to establish adequate maintenance capability to support this equipment. During 3rd and 4th Quarter, two factory service representatives from RCA assisted in constructing an interim repair facility for AN/TRC-97's at Long Binh, conducted OJT with personnel on site, and assisted in establishing new AN/TRC-97B systems. The RCA contract was completed on 30 Jun 1969. Presently repair within the capability of 1st Signal Brigade personnel is accomplished by the 327th Signal Company at Long Binh or the 362d Signal Company at Cam Ranh Bay. Items beyond incountry capability can either be shipped to RCA in Camden, New Jersey, for repair or parts can be ordered through the Air Force at Clark Field, Philippines. Information from Fort Monmouth indicates that the AN/TRC-97B will be replaced in the Army inventory by the AN/TRC-112 and AN/TRC-121. This new equipment will be ready for delivery to Vietnam during the 4th Quarter 70.

(c) The AN/TRC-97B is currently the only piece of tactical communications equipment within 1st Signal Brigade requiring 400 HZ power. When originally delivered to the brigade, each AN/TRC-97B had 2 each 10 KW 400 HZ Generators. It was soon noted that these generators were over age and that they had a high failure rate. USARV scheduled these generators for inclusion in the closed loop program. Upon return from the program these generators are to be used with counter mortar radar. USARV released to the Brigade 32 each rebuilt 45 KW 400 HZ generators to replace the 10 KW's. Early in June these generators were delivered to the groups, and late that month they began to arrive on site. Upon uncrating many of the generators were found to have been damaged before or during shipment. As the 10 KW's are overdue for the closed loop program, parts for the damaged 45 KW's were placed on Red Ball requisition. As these are repaired, the 10 KW's will be turned in to the local Direct Support Unit. A maintenance float of six 45 KW Generators is being established for 1st Signal Brigade to be held at 1st Logistical Command Maintenance Shops in the vicinity of AN/TRC-97B sites.

(d) T-day inventory actions during the past quarter involved purification of the master card file. Concurrently, Logistics Directorate is continuing to emphasize to subordinate units the importance of submitting correct updates.

(e) Five new pre-printed ORESTES Keylists were procured for 1st Signal Brigade units to replace USARV-CEO-Item 14. A different keylist is assigned to each corps area and one keylist is assigned for inter-corps communications. The distinct feature of the new keylist is that if one keylist is compromised in a certain corps area the other corps areas are not affected. This was not the case when using USARV-CEO-Item 14. Three TSEC/KW-7's were transfered from Brigade assets to the 29th Signal Group to secure the Command Control Network. Numerous items of COMSEC equipment were transferred within the Brigade to support the installation of Mode I and Mode V Circuits in RVN.

(f) Excess repair parts and equipment were both transferred to Brigade units from USASTRATCOM-PAC assets and redistributed between Brigade units to meet current requirements. Significant among the redistributions was the relocation of rehabilitated AN/TRC-24 radio equipment from the 2nd Signal Group to the 12th and 21st Signal Groups and the submission of the excess AN/TRC-24 equipment to USARV for redistribution to divisional and allied units.

(g) A new revised Commander's Critical Items List (CCIL) was implemented. The old procedure had become administratively cumbersome due to the inclusion of non-critical items on the CCIL which diluted the effectiveness of the original program. The new revised list limits submission to items of significant concern rather than to those shortages which the units might like to have but are not really causing serious problems. Under this program there have been 205 requisitions submitted to date and, of these, 55 have been filled. Supply advice status has been received on each of the remaining 148 requisitions.

2. Section 2, Lessons Learned: Commander's Observations, Evaluations, and Recommendations.

a. Personnel.

(1) Non-receipt of personnel (Officer, Warrant Officer and EM).

(a) OBSERVATION: This headquarters continues to experience difficulty in obtaining personnel replacements against requisitions submitted to USASTRATCOM and DA.

(b) EVALUATION: The continuous downgrading of our requisitions and cancellation of items on the requisition are the major reasons in non-receipt of personnel. The total average arrival percentage, for enlisted personnel, for the reporting period is 41% of requisitioned items. This insufficient fill rate of validated requisitions continues to be a problem

of major concern to this command. The current Brigade understrength is directly attributable to insufficient fill of our validated requisitions.

(c) RECOMMENDATIONS: Recommend every effort be made, by USASTRATCOM and DA, to ensure a more acceptable degree of fill against our validated requisitions.

b. Operations.

(1) AUTOVON

(a) OBSERVATION: An additional circuit was cutover between the Phu Lam Joint Overseas Switchboard (JOSS) and Wahiawa Switch in May 1969. Vietnam now has five of the seven circuits initially programmed to access the DAU Switch. An additional circuit is scheduled for activation early in the next quarter. The seventh circuit will not be activated as a common user circuit. It is tentatively scheduled to remain in its present configuration, eventually becoming a dedicated AUTOSEVOCOM circuit. Automatic Electric Company's contractual efforts during the last quarter consisted of completion of interface installations and test at the Phu Lam JOSS and the MACV and USARV EAC's. In addition, the final thirteen applique units were received and installed at Phu Lam and Bangkok JOSS's. AECO's contractual efforts for AUTOVON were completed and accepted by DD 250 action. During the last quarter an AUTOVON Seminar was held in the DCA-SEA Conference Room during the period 14 thru 28 May 1969. This seminar was attended by management and O&M representatives from Brigade units in RVN and Thailand. The Test Team Committee established on 13 May 1969 met the second Tuesday of each month during the last quarter at Clark Air Base to formulate test schedules and discuss problems peculiar to AUTOVON Cutover II. Circuit testing and conditioning was slow getting off the ground. However, a new Test Team Chief was appointed in mid-July and test/conditioning efforts improved considerably. With approximately forty percent of the trunk circuits already tested, it is anticipated that all trunks, with the exception of the new leases will be tested and conditioned as required before live (functional) testing with the DAU Switch begins on 29 September 1969.

(b) EVALUATION: Only six of the seven AUTOVON circuits programmed for Cutover I will be activated at Phu Lam. RVN has lived with this reduced circuit capability for the past five months. AUTOVON Cutover II is only three months hence. On 1 Nov 69 RVN will have ten AUTOVON circuits, accessing the DAU Switch. An additional seven AUTOVON circuits from the Nha Trang Tandem will access the DAU Switch. Phu Lam will retain three of the six circuits to Wahiawa after Cutover II. Posture relative to AUTOVON access will be greatly improved as a result of the DAU Switch activation.

Thailand will obtain an additional circuit to Wahiawa for a total of three circuits between Bangkok and Wahiawa. Additionally, there will be five circuits from the Bangkok JOSS accessing the DAU Switch. The Korat Tandem will access the DAU Switch with six circuits. Cooperation and coordination between Brigade, other MILDEPS and agencies has shown vast improvement in the last quarter.

(c) RECOMMENDATION: Continuation of the all out efforts being made by all concerned to ensure that AUTOVON Cutover II will be successful. Lack of cooperation and proper coordination at all levels were the primary causes for most of the failures encountered during Cutover I.

(2) AN/TSC-82

(a) OBSERVATION: The transportable nature of the AN/TSC-82 is somewhat questionable.

(b) EVALUATION: It was almost impossible to transport the AN/TSC-82 to the Sa Dec site due to the inaccessibility of the site and the excessive weight of the technical control van.

(c) RECOMMENDATION: A more thorough investigation of available transportation relative to prospective site locations of future AN/TSC-82's should be made prior to choosing any particular site.

(3) AN/GRC-170

(a) OBSERVATION: Flexibility provided by frequency synthesizers is good but item needs refinement. Considerable effort is required to convert existing AN/MRC-85 links to space/frequency diversity.

(b) EVALUATION: Although frequency synthesizers provide flexibility in selecting frequencies in the AN/GRC-170, the reliability of these items has been very low. Changing frequencies in the AN/GRC-170 van is not an overnight procedure. Furthermore, the change required in modifying existing RF equipment external to the van is a lengthy process. Contractor has been charging approximately $25,000 per terminal to install an AN/GRC-170 at an AN/MRC-85 site.

(c) RECOMMENDATION: Radio Engineering Laboratories (REL) be requested to ensure that frequency synthesizers undergo more extensive quality assurance testing and that necessary modifications be made to ensure reliability. Military personnel be trained to install the AN/GRC-170.

(4) Dial Telephone Exchange Cutover.

(a) OBSERVATION: SEA TELMA cutover team has been established to provide engineering and technical assistance to the operating units in the cutover of DTE's.

(b) EVALUATION: The cutover team has provided the engineering and technical assistance and supervision needed to assure the smooth and efficient cutover of several DTE's. The cutover team was instrumental in the Plantation cutover and is presently working closely with personnel at Phu Tai, Phuoc Vinh, and Phu Bai DTE's.

(c) RECOMMENATIONS: That SEA TELMA cutover team continue to provide supervision and technical assistance to personnel involved in the cutover of dial telephone exchanges.

(5) Emergency Action Console Systems

(a) OBSERVATION: Difficulties with the EAC were primarily an accumulation of maintenance problems leading to functional failure of major system components. Routine transmission level checks should have identified problem. Maintenance personnel were either unaware of procedures, lacked test equipment, or did not know how to use signal generators and measurement devices. Drawings on site were incomplete. Routine maintenance such as operator functional checks were not being performed. Existing manuals for installation and maintenance were not written for 200 line MACV system and lacked detail required in a self taught, self perpetuating OJT program. Field modification kits had not been completely received, were partially installed, and installation had not been documented. PLL items did not have accurate demand data on critical items. DS/GS Support for NECO EAC Systems in SEA is very limited.

(b) EVALUATION: Routines to identify faulty component operation are required to identify and clear each malfunction by O&M personnel prior to discovery by a user. Accumulated faults interacting become extremely difficult for the skilled technician and impossible for the semi-skilled technician to clear. System failures were attributed to primary problems coupled with missing critical spares and poor O&M reference manuals. Maintenance personnel in the 36H and 36G MOS are trained in mechanical switch trains but do not have any training or experience in common control switching logic. It is an unreasonable assumption to expect a mechanical switchman to learn common control logic as an OJT activity. North Electric Co. schematic drawings do not follow the general pattern of Western Electric Co SD and CD Sheets familiar to XY and AE switchmen. The NECO maintenance instructions are difficult to understand although complete. Test equipment for line and link transmission amplifier had not been provided at the time of installation nor acquired after installation. The EAC transmission system is stable until components are substituted or uneccessary adjustments are made. USARV EAC System required no amplifier adjustment but no major component substitutions had occurred since installation. The EAC

school conducted by the NECO Technical representative confirmed that students for logic courses on common control mechanical or electronic devices must be carefully screened and be capable of dealing in intangibles. The understanding of relay mechincal adjustment and basic DC circuits is not indicative of the capacity to understand electronic logic circuits or cascaded switching functions used in this type of equipment.

(c) RECOMMENDATION: Routine operational console activity, supply and administrative activities, simple installation of main frame cross connects, and the installation of EAC telephones should be assigned to appropriate personnel in developing TDA or TO. Maintenance and repair of common control, switching, and transmission equipment should be restricted to one or more fully qualified personnel per installation. O&M manuals for military equipment should have a publication standard for running lists, schematic drawings (SD), and circuit descriptions (CD) for any supplier. NECO EAC repairman and other special equipment repairman should have an identifier MOS suffix as an aid to AG personnel to indicate a technical placement board action. A technical placement board composed of qualified technical supervisors could assist in administrative assignment to match unique experience to specific equipment. Personnel inputs to schools for equipment utilizing common control or other advanced logic should be screened by some standard or battery tests for minimum knowledge of fundamentals as well as capacity to deal with intangibles and advanced circuits theory.

c. TRAINING.

(1) No Shows at the US Army Training Facility.

(a) OBSERVATION: In numerous instances units that had quotas to classes at the USATF have either failed to send personnel or sent unqualified personnel.

(b) EVALUATION: Requests for quotas in the majority of the USATF courses are greater than the number of available spaces. Accordingly, some units do not receive all of the quotas they require. The Training Division normally does not receive sufficient notice of "no shows" to allow for redistribution of the quotas and the class is conducted with less than a minimum number of students in attendance. This action deprives units of critically required training.

(c) RECOMMENDATION: Recommend that units carefully screen prospective students to ensure they are properly qualified for attendance at the USATF, and to the maximum extent possible fill all quotas they receive as a result of requests submitted by the unit. Further all units should notify the Training Division 1st Signal Brigade immediately upon determining they will be unable to fill a quota.

(2) TRAINING ON USE OF TAR-5 TEST EQUIPMENT

(a) OBSERVATION: With the installation of TAR-5 test equipment, there will be a requirement to provide training to DTE personnel on its proper use.

(b) EVALUATION: At the present time there are no plans for necessary instruction on this particular equipment at USATF, Long Binh. In addition, there is no extra test equipment available or on requisition for this training.

(c) RECOMMENDATION: That limited training be provided by GHO (contractor) personnel at the DTE's after installation of the TAR-5 packages. Additional training could be provided by CSEMA T&A team.

d. Intelligence. None

e. Logistics.

(1) Operational check and inspection of new equipment.

(a) OBSERVATIONS: 32 Each 45 KW Generators were issued to the 1st Signal Brigade during 4th Quarter 69. These generators were released to the groups and shipped to units in the field. These generators were shipped to individual sites while still in their original crates. When the crates were opened on the sites many of the generators were found to have been damaged prior to or during shipment. Time was lost evaluating the problem and parts were ordered through local support units instead of from the main depot.

(b) EVALUATION: Problems with the generators could have been discovered much earlier had the receiving units inspected and tested each generator prior to shipment to isolated sites.

(c) RECOMMENDATION: When major end items are released from depot to 1st Signal Brigade units, these units should throughly inspect each piece to include operational check prior to shipment to individual sites.

(2) Equipment Status Report (AMC-124) Review.

(a) OBSERVATION: During the quarter, representatives from the Major Item Data Agency (MIDA) visited all units of the 1st Signal Brigade to assist in the updating of the 20 June Equipment Status Reports.

(b) EVALUATION: This visit was recommended by and coordinated through USARV G-4 as a result of the many deficiencies found on a previous

Technical Assistance Visit conducted in June by the MIDA representatives. The Equipment Status Reports of 40 units of the 1st Signal Bde were inspected and the total dollar value of equipment not being reported by these units was found to be $5,282,125.00. There were a total of 813 deficiencies found in the reports.

(c) RECOMMENDATION: That the Battalion and Group S-4s become familiar with the provisions of AR 711-5 and USARV Reg 711-5, and give a more thorough check of all Equipment Status Reports in the future, to insure that all reportable items are being reported properly and that the reports are verified by the Unit Property Book Officer. These reports should be verified by the Battalion and Group S-4s also to insure they are correct and that each unit has submitted a report.

(3) Reports of Survey

(a) OBSERVATION: During the Quarter, submissions of Reports of Survey by units of the 1st Sig Bde reveal that failure to comply with provisions set forth in AR 735-10 and AR 735-11 are causing considerable delay in processing and approving the reports.

(b) EVALUATION: The most common and frequent deficiencies found in the Reports of Survey are the unit UIC's not shown, serial numbers of items being surveyed not indicated, disposition of the item not included in the report, failure of the Survey Officers to properly investigate the loss, findings and recommendations of the Surveying Officer improperly stated, exhibits to the report improperly prepared and the action of the appointing authority not being taken.

(c) RECOMMENDATION: That all unit Property Book Officers become familiar with the provisions set forth in AR 735-10 and AR 735-11. This would eliminate many of the minor corrections and help facilitate processing of Reports of Survey. That the battalion S-4s and appointing authority give a more thorough check of the Reports of Survey to insure that the Reports are properly prepared, that every effort has been made to locate the property by the Survey Officer and that all individuals concerned or connected in any way with the loss are contacted and that this information is included in the Report of Survey. Most of the deficiencies found on the reports could be corrected at the battalion level if properly screened before forwarding to the Group S-4. That an NCO at group level be appointed to the task of screening all Reports of Survey. The majority of the deficiencies could be corrected prior to forwarding of the report to this headquarters if more emphasis were placed on reading previous indorsements from this headquarters indicating corrective actions needed. This would familiarize the group S-4s with the most frequent problems and errors found in the reports by this headquarters and would facilitate correction at the group level.

(4). Combat Loss Reports.

(a) OBSERVATION: During the Quarter, submissions of Combat Loss Reports by units of the 1st Sig Bde reveal that failure to comply with the provisions set forth in USARV Reg 735-2 are causing considerable delay in processing of the reports.

(b) EVALUATION: The most common and frequent deficiencies found in the reports are grid coordinates missing, all condition codes not reported, the disposition of the equipment not shown, tabular authority not indicated and submission of Combat Loss Reports for which no record of enemy activity or equipment damage reports exist.

(c) RECOMMENDATION: That all unit Property Book Officers and battalion and group S-4s familiarize themselves with USARV Reg 735-2 to insure that the reports are properly prepared and all information required is included in the reports.

(5) Accountability of Equipment - ROKFV Broadcast Facilities.

(a) OBSERVATION: The lack of guidelines for the transfer and accountability of equipment and facilities, installed under US Government contract for use by third country allied forces, has caused unnecessary delays in bringing the ROKFV Broadcast Facilities Contract to completion.

(b) EVALUATION: Upon completing the installation of a facility, it is normally inspected and final tested under terms of the contract and then inventoried with representatives of the government contracting office, prime contractors, and the designated US Agency, who will hold title and maintain property accountability for the United States Government. At this time DD-250's are signed transferring the property to the designated US Agency and allowing the prime contractor to invoice the government for payment. Due to operational priorities requested by the ROKFV and the contractor to meet these requirements, the inventories and signing of DD-250's were deferred until all broadcast facilities were completed. Upon completion of the facilities, a request was forwarded to higher headquarters querying what US Agency had been designated to maintain property accountability. Approximately 100 days passed before this problem could be resolved. This resulted in a delay of payment to the contractor, failure of the ROKFV to take corrective measures on equipment troubles or preventive maintenance since they felt that they were not yet responsible for the facilities, and an inability to establish logistic channels which in turn created many operational and logistical problems.

(c) RECOMMENDATION: That contracts involving allied governments have approved, written guidelines for property accountability established prior to contract negotiations. This should include any transfer agreements. designated property accountability, and follow-on logistical support. This would assist in contract negotiations, facilitate management of the contract during the implementation period, and provide a timely and efficient means of closing out the contract.

(6) Relocation of Fixed Plant Communications Equipment.

(a) OBSERVATION: Due to frequent, unprogrammed changes in operational requirements, fixed plant communications equipment (i.e. Dial Telephone Exchanges, Communications Centers, and AUTODIN terminals) originally installed by contract or Class IV Project procedures, is frequently removed and reinstalled in a new location. The relocation of major end items poses no problem. However, the installation materials (i.e. wire, cable, nuts, bolts, and conduit) cannot be reclaimed from the original facility in sufficient quantity or condition to effect the necessary reinstallation.

(b) EVALUATION: Installation materials are assembled for project relocation on a case-by-case basis which is usually time consuming and difficult.

(c) RECOMMENDATION: That supplemental Bills of Materials be engineered, procurred/requisitioned, and stocked on a projected basis for specific equipments (i.e. AUTODIN Mode V, etc) in anticipation of project relocations.

f. Organization. None

g. Other. Air Conditioning Problems.

(1) OBSERVATION: Fixed communications sites are beginning to experience increasing difficulties with air conditioner breakdowns. The expected service life has been observed to be less than the normal three years. Due to the high temperature and humidity conditions in RVN, the expected service life is closer to eighteen months.

(2) EVALUATION: A survey by USAECAV indicates that several of the air conditioning systems at communications sites in RVN are nearing their expected RVN service life dates and will be needing overhauls. A program for rebuilding these air conditioners is being scheduled by USAECAV.

SCCPV-OP-SD
SUBJECT: Operational Report of Headquarters, 1st Signal Brigade (USASTRATCOM) for Period Ending 31 July 1969, RCS CSFOR-65 (R1)

(3) RECOMMENDATION: That the USAECAV rebuilding program be closely monitored so that proper priorities are scheduled and updated as required.

FOR THE COMMANDER:

3 Incl
as
Incl 1 and 3 wd HQ, DA

GARY P. GIUMETTE
1LT, SigC
Act Asst AG

DISTRIBUTION:
Assistant Chief of Staff for Force Development, Department of the Army, Washington, D.C. 20310
Commander in Chief, United States Army Pacific, ATTN: GPOP-DT, APO 96558
Commanding General, United States Army Vietnam, ATTN: AVHGC-DST, APO 96375
Commanding General, United States Army Strategic Communications Command ATTN: DCSOPS, SCC-OP-RT, Fort Huachuca, Arizona 85613
Commanding General, United States Army Strategic Communications Command - Pacific, ATTN: SCCP-OP, APO 96557
Commanding Officer, 2nd Signal Group, APO 96491
Commanding Officer, 12th Signal Group, APO 96308
Commanding Officer, 21st Signal Group, APO 96240
Commanding Officer, 29th Signal Group, APO 96346
Commanding Officer, 160th Signal Group, APO 96491
Commanding Officer, United States Army Regional Communications Group, APO 96243

AVHGC-DST (17 Aug 69) 1st Ind
SUBJECT: Operational Report of Headquarters, 1st Signal Brigade (USASTRATCOM) for Period Ending 31 July 1969, RCS CSFOR-65 (R1)

HEADQUARTERS, UNITED STATES ARMY, VIETNAM, APO San Francisco 96375 30 AUG 1969

THRU: Commanding General, United States Army Strategic Communications Command-Pacific, APO 96557

TO: Commander in Chief, United States Army, Pacific, ATTN: GPOP-DT, APO 96558

Assistant Chief of Staff for Force Development, Department of the Army, Washington, D.C. 20310

1. This headquarters has reviewed the Operational Report-Lessons Learned for the quarterly period ending 31 July 1969 from Headquarters, 1st Signal Brigade (USASTRATCOM).

2. Comments follow:

a. Reference item concerning "Non-receipt of personnel (Officer, Warrant Officer and EM)," section II, page 14, paragraph a(1). The 1st Signal Brigade is a USASTRATCOM unit and as such requisitions for personnel go through STRATCOM to the Department of the Army. Although USARV is not responsible for providing personnel replacements, personnel have been furnished on an informal basis providing these personnel are excess to the needs of USARV units.

b. Reference item concerning "AN/TSC-82," section II, page 16, paragraph b(2). Concur with the recommendation. Non-concur with the observation that the transportable nature of the AN/TSC-82 is somewhat questionable. The AN/TSC-82 is both air transportable and moveable by road. With the exception of the installation of the Sa Dec terminal, no difficulty was encountered during movement of the equipment. The major difficulty found during the installation of the Sa Dec terminal was lack of a river landing site for landing craft, and the load limitation of existing bridges in the area. The terminal was finally moved over existing bridges with no damage to either the bridges or the equipment.

c. Reference item concerning "AN/GRC-170," section II, page 16, paragraph b(3); concur. The 1st Signal Brigade has submitted the recommendations to the United States Army Communications Systems Agency.

d. Reference item concerning "TRAINING ON USE OF TAR-5 TEST EQUIPMENT," section II, page 19, paragraph c(2); concur. Training provided by the contractor should not require modification of the original contract or additional expense to the government.

30 AUG 1969

AVHGC-DST (17 Aug 69) 1st Ind
SUBJECT: Operational Report of Headquarters, 1st Signal Brigade (USASTRATCOM) for Period Ending 31 July 1969, RCS CSFOR-65 (R1)

e. Reference item concerning "Equipment Status Report (AMC-124) Review," section II, page 19, paragraph e(2); concur. This headquarters will continue to emphasize these points in future liaison visits and in the AR 711-5 update report (RCS: AMC-124). No further action required at this or higher headquarters.

f. Reference item concerning "Relocation of Fixed Plant Communications Equipment," section II, page 22, paragraph e(6); concur. The 1st Signal Brigade is advised to initiate action as required by AR 105-22.

g. Reference item concerning "Air Conditioning Problems," section II, page 22, paragraph g; concur. USAECAV is taking action to implement a rebuilding program.

FOR THE COMMANDER:

B. A. Goodwin

B. A. GOODWIN
CPT, AGC
Assistant Adjutant General

Cy furn:
1st Sig Bde

SCCP-OP (17 Aug 69) 2d Ind
SUBJECT: Operational Report of Headquarters, 1st Signal Brigade (USASTRATCOM) for Period Ending 31 July 1969, RCS CSFOR-65 (R1)

Headquarters, U. S. Army Strategic Communications Command-Pacific, APO San Francisco 96557 22 SEP 1969

TO: Commander in Chief, United States Army, Pacific, ATTN: GPOP-DT, APO 96558

1. Subject report is forwarded in accordance with AR 525-15.

2. This headquarters has reviewed subject report and offers the following comments:

a. Reference item concerning "Emergency Action Console Systems", paragraph 2b(5), page 17. Beginning in May 1969 all MOS 36H graduates have received theory training on the EAC system and as soon as a training switch is installed at USASCS (2d Qtr FY-70), all MOS 36H graduates will be EAC qualified, thereby negating a need for special ASI.

b. Concur with the remainder of the report as indorsed.

FOR THE COMMANDER:

Frank C. Mahin

FRANK C. MAHIN
COL, GS
Chief of Staff

CF: w/o Incl
HQ USARV
HQ 1st Sig Bde

GPOP-DT (17 Aug 69) 3d Ind
SUBJECT: Operational Report of HQ, 1st Signal Brigade (USASTRATCOM) for Period Ending 31 July 1969, RCS CSFOR-65 (R1)

HQ, US Army, Pacific, APO San Francisco 96558 25 SEP 69

THRU: Commanding General, US Army Strategic Communications Command, Fort Huachuca, Arizona 85613

TO: Assistant Chief of Staff for Force Development, Department of the Army, Washington, D. C. 20301

This headquarters concurs in subject report as indorsed.

FOR THE COMMANDER IN CHIEF:

D. A. TUCKER
CPT. AGC
ASST AG

Cy furn:
DA, ACSFOR
CG, USASTRATCOM-PAC

SCC-PO-CERA (17 Aug 69) 4th Ind
SUBJECT: Operational Report of HQ, 1st Signal Brigade (USASTRATCOM) for Period Ending 31 Jul 69, RCS CSFOR-65 (R1)

Headquarters, US Army Strategic Communications Command, Fort Huachuca, Arizona 85613 7 OCT 1969

TO: Assistant Chief of Staff for Force Development, Department of the Army, Washington, D. C. 20301

This Headquarters has evaluated subject report and forwarding indorsements and concur in the report as indorsed.

FOR THE COMMANDER:

Robert A. Mall
ROBERT A. MALL
Captain, AGC
Asst Adj Gen

CF:
CG USASTRATCOM-PAC

1 ST SIGNAL BRIGADE ORGANIZATION
31 JULY 1969

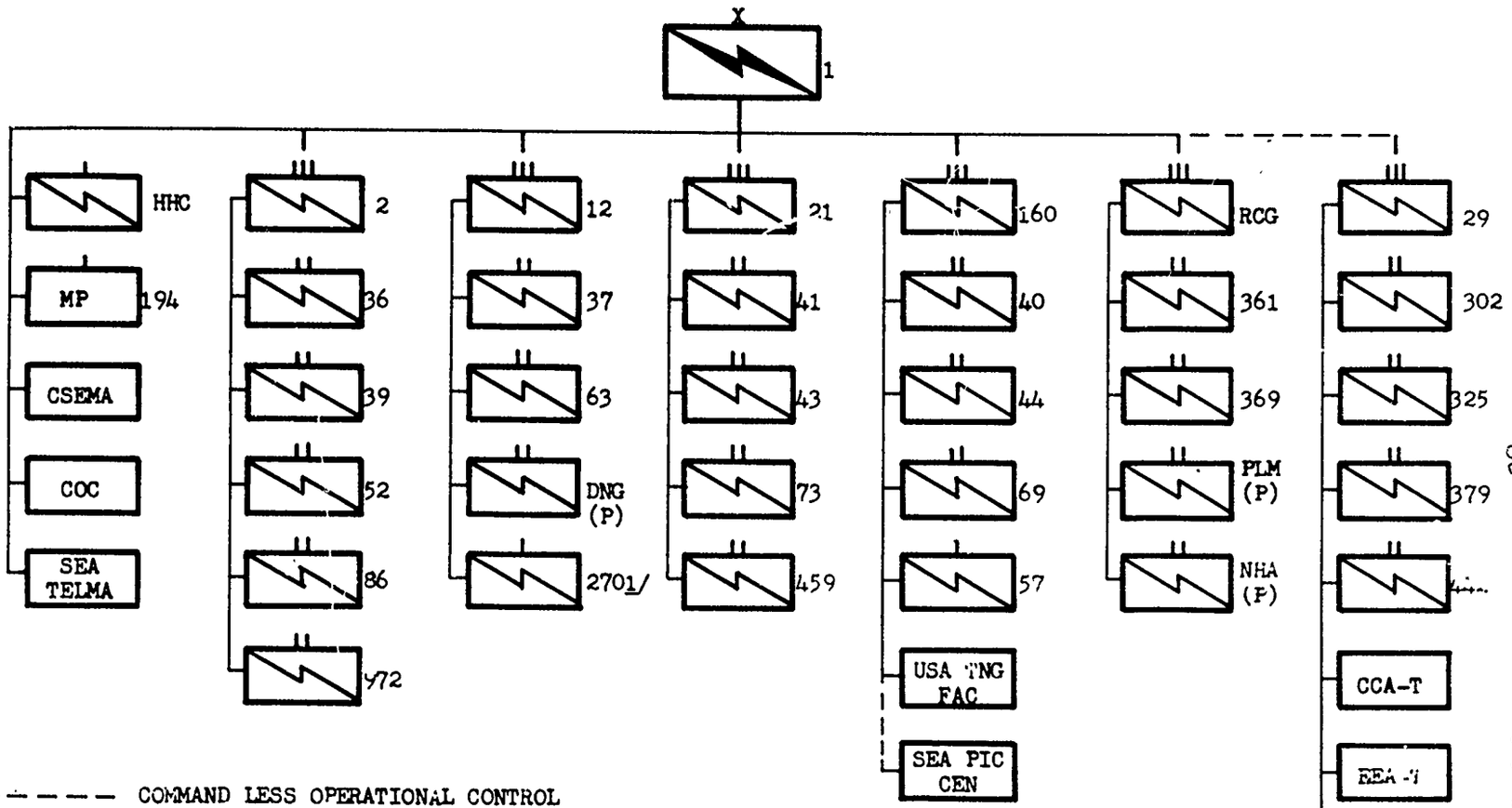

— — — — — COMMAND LESS OPERATIONAL CONTROL

(P) PROVISIONAL UNIT

1/ OPERATIONAL CONTROL CG, XXIV CORPS

2/ OPERATIONAL CONTROL CG, USARV

Inclosure 2a

Incl 1 to Incl 2

29

2 D SIGNAL GROUP ORGANIZATION
31 JULY 1969

MISSION: TO PERFORM AREA COMMUNICATIONS-ELECTRONICS FUNCTIONS WITHIN III AND IV CTZ AS DIRECTED BY COMPETENT AUTHORITY.

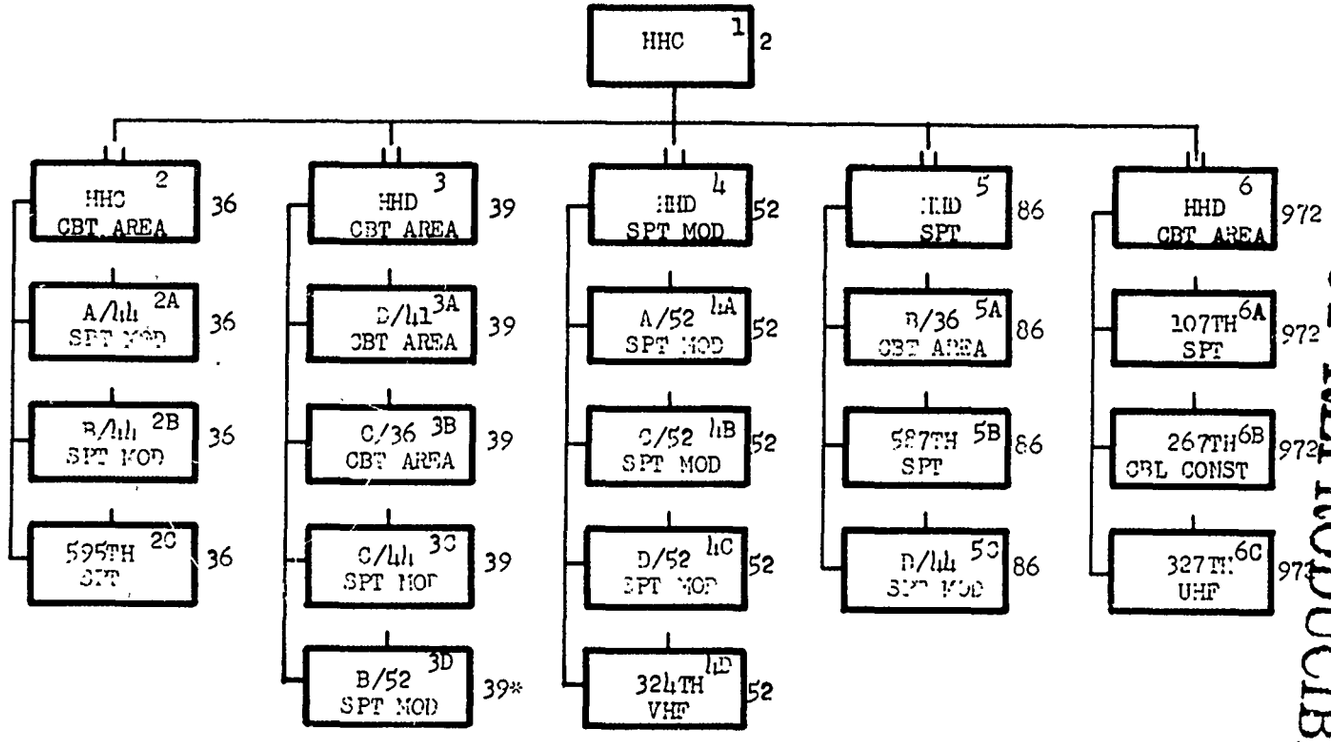

* ASSIGNED TO 52D BATTALION; ATTACHED FOR ALL PURPOSES TO 39TH BATTALION

NOT REPRODUCIBLE

UNCLASSIFIED
Security Classification

DOCUMENT CONTROL DATA - R & D

(Security classification of title, body of abstract and indexing annotation must be entered when the overall report is classified)

1. ORIGINATING ACTIVITY *(Corporate author)* HQ, OACSFOR, DA, Washington, D.C. 20310	2a. REPORT SECURITY CLASSIFICATION UNCLASSIFIED 2b. GROUP

3. REPORT TITLE

Operational Report - Lessons Learned, HQ, 1st Signal Brigade (USASTRATCOM)

4. DESCRIPTIVE NOTES *(Type of report and inclusive dates)*

Experiences of unit engaged in counterinsurgency operations, 1 May 69 to 31 July 69.

5. AUTHOR(S) *(First name, middle initial, last name)*

CG, 1st Signal Brigade (USASTRATCOM)

6. REPORT DATE 17 August 1969	7a. TOTAL NO. OF PAGES 33	7b. NO. OF REFS
8a. CONTRACT OR GRANT NO. b. PROJECT NO. c. N/A d.	9a. ORIGINATOR'S REPORT NUMBER(S) 693297 9b. OTHER REPORT NO(S) *(Any other numbers that may be assigned this report)*	

10. DISTRIBUTION STATEMENT

11. SUPPLEMENTARY NOTES N/A	12. SPONSORING MILITARY ACTIVITY OACSFOR, DA, Washington, D.C. 20310

13. ABSTRACT

31

DD FORM 1 NOV 65 1473

UNCLASSIFIED
Security Classification

*U.S. GOVERNMENT PRINTING OFFICE : 1969391-532 (21397