UNCLASSIFIED

AD NUMBER

AD860067

NEW LIMITATION CHANGE

TO

Approved for public release, distribution unlimited

FROM

Distribution authorized to U.S. Gov't. agencies and their contractors; Administrative/Operational Use; SEP 1969. Other requests shall be referred to Air Force Weapons Lab., Kirtland AFB, NM.

AUTHORITY

AFSWC ltr, 26 Oct 1970

THIS PAGE IS UNCLASSIFIED

AFWL-TR-69-121

AFWL-TR-
69-121

AD 860067

SUMMARY OF COMMERCIAL WASTE WATER TREATMENT PLANTS

James A. Mahoney

TECHNICAL REPORT NO. AFWL-TR-69-121

September 1969

D D C
OCT 1 1969

AIR FORCE WEAPONS LABORATORY
Air Force Systems Command
Kirtland Air Force Base
New Mexico

This document is subject to special export controls and each transmittal to foreign governments or foreign nationals may be made only with prior approval of AFWL (WLDC), Kirtland AFB, NM, 87117.

AFWL-TR-69-121

AIR FORCE WEAPONS LABORATORY
Air Force Systems Command
Kirtland Air Force Base
New Mexico

When U. S. Government drawings, specifications, or other data are used for any purpose other than a definitely related Government procurement operation, the Government thereby incurs no responsibility nor any obligation whatsoever, and the fact that the Government may have formulated, furnished, or in any way supplied the said drawings, specifications, or other data, is not to be regarded by implication or otherwise, as in any manner licensing the holder or any other person or corporation, or conveying any rights or permission to manufacture, use, or sell any patented invention that may in any way be related thereto.

This report is made available for study with the understanding that proprietary interests in and relating thereto will not be impaired. In case of apparent conflict or any other questions between the Government's rights and those of others, notify the Judge Advocate, Air Force Systems Command, Andrews Air Force Base, Washington, D.C. 20331.

DO NOT RETURN THIS COPY. RETAIN OR DESTROY.

AFWL-TR-69-121

SUMMARY OF COMMERCIAL WASTE WATER TREATMENT PLANTS

James A. Mahoney

TECHNICAL REPORT NO. AFWL-TR-69-121

This document is subject to special export controls and each transmittal to foreign governments or foreign nationals may be made only with prior approval of AFWL (WLDC), Kirtland AFB, NM, 87117. Distribution is limited because of the technology discussed in the report.

FOREWORD

This report was prepared under Program Element 63723F, Subtask 3.1.001. Inclusive dates of research were 1 January 1969 to 15 August 1969. The report was submitted 31 August 1969 by the AFWL Project Engineer, Mr. James A. Mahoney (WLDC-TE).

The assistance of the following personnel are gratefully acknowledged: Donald G. Silva, Major, USAF, Chief Environics Unit, Bertrand F. Ruggles, Captain, USAF, and Dennis I. Hirota, Captain, USAF, all of the Environics Unit of the Civil Engineering Branch.

Information in this report is embargoed under the U.S. Export Control Act of 1949, administered by the Department of Commerce. This report may be released by departments or agencies of the U.S. Government to departments or agencies of foreign governments with which the Unites States has defense treaty commitments, subject to approval of (controlling office).

This technical report has been reviewed and is approved.

JAMES A. MAHONEY
Project Engineer
Civil Engineering Branch

for RAYMOND F. VADNAIS, JR, MAJ, USAF
Chief, Facilities Technology
Civil Engineering Branch

CLIFF M. WHITEHEAD, COL, USAF
Chief, Civil Engineering Branch

HAROLD L. JAMES, COL, USAF
Chief, Development Division

ABSTRACT

The purpose of the report is to catalog and review capabilities of commercially available packaged waste water treatment plants for possible Air Force application in limited war and fixed base installations. Definitions of the various methods of treatment are included. Simple curves are furnished for a quick estimate of costs, power requirements, erection time, shipping volume and weight in relation to flow capacity. Included are tables which relate the performances of a number of plants tested by the National Sanitation Foundation, by the manufacturer, and by the Florida State Board of Health. A list of firms which manufacture packaged waste water treatment plants is included in an appendix.

(Distribution Limitation Statement No. 2)

This page intentionally left blank.

CONTENTS

SECTION		PAGE
I	INTRODUCTION	1
II	DEFINITIONS AND OPERATIONAL CRITERIA	6
III	DISCUSSION	30
IV	APPLICATIONS	37
	Appendix I	41
	Appendix II	47
	Appendix III	49
	References	52
	Distribution	53

LIST OF FIGURES

FIGURE		PAGE
1	Simple Extended Aeration Plant	14
2	Flow Rates, Typical Extended Aeration Plant	15
3	Contact Stabilization Process Flow Diagram	18
4	Oxidation Ditch Plant Line Diagram	19
5	Line Diagram Aerotor Plant	21
6	Aerated Lagoon	23
7	Package Waste Treatment Operational Power Requirements	31
8	Shipping Volume	32
9	Shipping Weight of Plant	33
10	Package Waste Treatment Capital Costs	35
11	Plant Erection Time	38

TABLES

TABLE		PAGE
I	Summary of Commercial Extended Aeration Packaged Sewage Treatment Plants	7
II	Summary of Commercial Contact Stabilization Packaged Sewage Treatment Plants	11
III	Packaged Treatment Plant Performance (Averages)	27
IV	Plants Tested by the Florida State Board of Health	29
V	Oxidation Ditch Construction Cost Figures	36

This page intentionally left blank.

SECTION I

INTRODUCTION

The purpose of this report is to catalog and review capabilities of commercially available packaged waste water treatment plants for possible Air Force application in limited war and fixed-base installations.

A packaged treatment plant is the customized combination of standard components selected by an engineer as a part of an overall waste-water system design. There is a fallacy in using the term "packaged plant" as it refers to a wide variety of fabricated treatment units. There are prefabricated factory-built plants, that handle flows up to 100,000 gallons per day (GPD). Then there are larger plants whose component parts are factory fabricated but field erected and handle flows in the millions of gallons per day.

Although packaged plants are broadly grouped into model or design series, few installations are exactly alike. Customizing of the selected basic plant may then range from the simple selection of accessory items, (comminution or chlorination equipment), to the solution of a complex sanitary engineering design problem resulting in a unique treatment plant composed of standard fabricated parts. Therefore, the design of a "packaged plant" by an engineer is analogous in all essential respects

to his selection and utilization of particular blowers, diffusers, sludge collectors, or pumps in the creation of a conventional basic biological treatment plant. (Ref. 1)

A letter from Hq PACAF dated 22 August 1968 (Appendix I) requested assistance in the area of sanitary treatment of domestic waste water in limited-war operations. The requirements stated were for a packaged treatment plant to serve 2,000 to 3,000 personnel, having the following criteria: transportability, availability, ease of erection, simplicity of operation and a biochemical oxygen demand (BOD_5) reduction of 90 percent.

From January 1969 to July 1969, the Civil Engineering Branch of the Air Force Weapons Laboratory canvassed manufacturers of packaged waste water treatment plants. A "Product Questionnaire" (Appendix II) was sent to approximately 60 manufacturers. Included in those receiving the questionnaire were 12 manufacturers that had models of their product certified by the National Sanitation Foundation (NSF), Ann Arbor, Michigan. Eight of the firms responded with a copy of the official certification.

The manufacturers response to the questionnaire was very poor. A number of those firms filling out the form partially answered the different items. A few answered the questionnaire fully. Many firms sent their catalogues and data sheets on their various models without filling out the questionnaire and the data had to be extrapolated.

Information and data used as inputs to this report were obtained from four sources: (1) the "Product Questionnaire," (2) the NSF certification booklets, (3) the Journal of Sanitary Engineering Division, American Society of Civil Engineers, and (4) the manufacturers catalogues. Because the information had to be extracted from so many sources, exact comparisons of the various brands of plants was not made. The information is reported as obtained and presented for the reader to exercise his own judgment.

The National Sanitation Foundation is an independent testing agency, which has the responsibility to develop standard criteria to evaluate the performance of packaged sewage treatment plants. To aid the NSF in their work, the Demonstration Grants Committee (now a part of the Federal Water Pollution Control Administration) of the U.S. Public Health Service approved and gave the Foundation's application a high priority. Subsequently, the Foundation was given a grant, WPD-74, which afforded operating funds over a three year period. (Ref. 2) Fifteen firms sent models of their plants for performance testing in accordance with the Foundations standards. Of these 15 plants, the Foundation has certified 12 plants at the time of this writing. The certification data are the property of the manufacturer of the plant tested and these data can only be released or reproduced by his permission. The manufacturer has an agreement with the Foundation to present

the certification data in its entirety, whenever it is used in advertising, prospectus, bids or other similar uses.

Although most of the plants tested by the Foundation are low flow capacity plants (3,000 to 16,000 GPD), the NSF has determined through its criteria development program that larger plants of a similar design will produce equal or better results and smaller plants will produce somewhat lesser results than any given plant in the series. (Ref. 3)

Before the NSF assumed responsibility for certifying packaged plant performance, various state boards of health became alarmed at the increased use of packaged plants, and developed their own criteria to evaluate plant performance. The Florida State Board of Health was one which established its own criteria. The Board, in the mid-fifties, established conditions for experimental, extended aeration plants. It is interesting to note that one of the conditions was a satisfactory surety bond to be posted by the manufacturer. It was believed that the bond should cover the cost of the waste-water treatment plant so that if satisfactory performance were not obtained, the purchaser would be reimbursed to provide for purchase of another plant. The bonds were written to cover expected efficiency at a given flow and waste strength (usually 200 mg/l BOD_5 and 200 mg/l suspended solids). After a year of operation, the Board felt that sufficient data had been collected to lift the surety bond on four manufacturers' plants. (Ref. 4)

The Ohio University, Athens, Ohio, received a U.S. Demonstration Committee Grant to collect data from an oxidation ditch at Somerset, Ohio. Performance data were obtained over a nine-month period. (Ref. 5)

SECTION II

DEFINITIONS AND OPERATIONAL CRITERIA

The range of packaged plants, (Tables I and II) is from the size for a single residence (600 GPD) to very large plants of 3 million GPD flow capacity. The methods used for treatment normally are extended aeration and contact stabilization. The extended aeration models are made in sizes up to 100,000 GPD and the contact stabilization plants normally start at 50,000 GPD and up. Most extended aeration plants are preassembled at the factory, but the larger contact stabilization plants are field erected.

There are also other modified forms of the activated sludge process that are classified in the complete mix, longterm aeration group. For the purpose of this report they will be grouped in a class called "Special Devices."

I. Extended Aeration is defined as those total oxidation plants which are designed to maintain about 10 pounds of suspended solids under aeration per pound of average daily biochemical oxygen demand (BOD_5) entering the aeration tanks. At such a high solids to BOD_5 ratio, very little excess sludge is produced. (Ref. 2)

Table I. Summary of Commercial Extended Aeration Package Sewage Treatment Plants.

MANUFACTURER	MODEL DESIGNATION OR SERIES	TYPE PROCESS	FLOW CAPACITY (GPD)	REMARKS
Aer-O-Flo Corp.	Model "S"	Extended Aeration	1,000-100,000	Factory prefabricated 45 models
Can-Tex Industries	Tex-A-Robic (EA)	Extended Aeration	5,000-50,000	Factory prefabricated
Chicago Pump	Rated Aeration H-Shear	Extended Aeration	1,000-5,000	Factory prefabricated 3 models
	SL-131 Rated Aeration	Extended Aeration	17,500-37,500	Factory prefabricated
	SL-144 Completaire	Mixed Modification of Activated sludge	15,000-75,000	Factory prefabricated duplex up to 150,000 GPD
	SL-138 & SL-139 Rated Aeration-Stepaire	Step Aeration	100,000-500,000	Field erected
Davco	6DA2-12DA40	Extended Aeration	2,000-40,000	
Defiance Company	1.65EA-40EA	Extended Aeration	1,650-40,000	Factory prefabricated Multiple unit for larger systems
Dorr-Oliver	CompleTreater		15,000-240,000	Uses Biofilter, Duo Clarigester screening and chlorination.
	CompleTreater-Aeration Plant	Extended Aeration or Contact Stabilization	100,000-500,000	Can be used with either method.

Table I. Summary of Commercial Extended Aeration Package Sewage Treatment Plants Continued.

MANUFACTURER	MODEL DESIGNATION OR SERIES	TYPE PROCESS	FLOW CAPACITY (GPD)	REMARKS
Dravo	Aeropack	Extended Aeration or Contact Stabilization	20,000-1,000,000	Sludge Digester used.
Eimco Corp.	Type ADC	Aerobic Digestion	2,000-1,000,000	
	Type ADR	Aerobic Digestion	1,000-15,000	
Infilco Incorporated	Accelo-Biox	Extended Aeration	7,500-300,000	Combination of mechanical and compressed air aeration
Lakeside Engineering Co.	Spira-Pac	Extended Aeration	Up to 60,000	
	Various Model Numbers	Extended Aeration & Contact Stabilization	2,500-3,000,000	
	Oxidation Ditch	Extended Aeration	10,000-3,000,000	
Lyco Systems Incorporated		Extended Aeration & Contact Stabilization	1,500-1,000,000	Multiple unit hook-up field erected.
Mack Sewage Treatment Systems, Incorporated	Mack	Aerobic Digestion	1,500-40,000	Add-on to increase capacity.
Marolf		Extended Aeration	2,000-21,000	Parallel add-on to increase capacity.
Neptune Microfloc Inc.	Recla-Pak	Extended Aeration	5,000-50,000	Increased capacity by parallel add-on.

Table I. Summary of Commercial Extended Aeration Package Sewage Treatment Plants Continued.

MANUFACTURER	MODEL DESIGNATION OR SERIES	TYPE PROCESS	FLOW CAPACITY (GPD)	REMARKS
Water Pollution Control Corp. (Sanitaire)	Mark I	Extended Aeration	2,000-35,000	Factory assembled
	Mark II	Extended Aeration	1,000-10,000	Factory assembled
Schmieg Sydnor Hydor-dynamics	Centri-Swirl	Extended Aeration	1,000-100,000	30,000 GPD largest single unit
Smith and Lovelace	Oxigest A & B	Extended Aeration	6,000-35,000	Parallel add-on to increase capacity.
	Oxigest C & D	Extended Aeration	6,000-35,000	Parallel add-on to increase capacity.
	Oxigest CY	Extended Aeration	2,000-10,000	
	Addigest	Extended Aeration	18,000-90,000	Field erected
Link-Belt	Contac-Pac	Extended Aeration	500-60,000	
Yeomans Brothers	Cavitette	Extended Aeration	Single Residence	Modified aeration
	Yeo-Wave	Extended Aeration	3,000-12,000	10 sizes
Permutit	Ameodyne Products	Extended Aeration & Contact Stabilization	1,000-30,000	23 sizes
Komline-Sanderson		Extended Aeration	Up to 500,000	
American Bowser Corp.	Oxy-Pak	Extended Aeration	1,000-300,000	W/"Aircomb" diffusers

Table I. Summary of Commercial Extended Aeration Package Sewage Treatment Plants Continued.

MANUFACTURER	MODEL DESIGNATION OR SERIES	TYPE PROCESS	FLOW CAPACITY (GPD)	REMARKS
American Radiator & Standard Corporation	Bio-Con	Extended Aeration	20,000-80,000	
Suburbia System, Incorporated	Suburbia	Extended Aeration	50-1500 homes	Predesigned steel components

Table 11. Summary of Commercial Contact Stabilization Package Sewage Treatment Plants.

MANUFACTURER	MODEL DESIGNATION OR SERIES	TYPE PROCESS	FLOW CAPACITY (GPD)	REMARKS
Aer-O-Flo Corp.	Model "CS"	Contact Stabilization	50,000-500,000	Field erected, 46 models
Can-Tex Industries	Tex-A-Robic (CS)	Contact Stabilization	30,000-50,000	Factory prefabricated
	Tex-A-Robic (RC)	Contact Stabilization	50,000-1,250,000	Field erected
Chicago Pump	SL-150 Stabilaire	Contact Stabilization	20,000-50,000	Factory prefabricated, duplex up to 100,000 GPD.
	SL-144 Completaire	Mixed Modification of Activated Sludge	15,000-75,000	Factory prefabricated, duplex up to 150,000 GPD.
	SL-138 & 139 Aeration Stepaire	Step Aeration	100,000-500,000	Field erected
Davco	11DAc20-12DAc70	Contact Stabilization Contact Stabilization	20,000-70,000 50,000-500,000	Field erected
Definance Company	20CS-10CS	Contact Stabilization	20,000-100,000	
Dorr-Oliver	CompleTreater-Aeration Plant	Contact Stabilization or Extended Aeration	100,000-500,000	
Dravo	Aeropack	Contact Stabilization & Extended Aeration	20,000-1,000,000	Sludge Digestor
Eimco	Type CSC	Contact Stabilization	20,000-1,000,000	

Table II. Summary of Commercial Contact Stabilization Package Sewage Treatment Plants Continued.

MANUFACTURER	MODEL DESIGNATION OF SERIES	TYPE PROCESS	FLOW CAPACITY (GPD)	REMARKS
Lakeside Engineering Co.	Various Models	Contact Stabilization & Extended Aeration	2,500-3,000,000	
Lyco Systems Incorporated		Contact Stabilization & Extended Aeration	1,500-1,000,000	Multiple unit add-on, field erected.
Water Pollution Control Corp.	Mark III	4 activated sludge process	80,000-2,000,000	Field erected
(Sanitaire)	Mark IV	Multi process	Up to 100,000	Field erected
Smith and Loveless	Oxigest R	Contact Stabilization	50,000-1,000,000	Field erected
Walker Process Equipment	Sparjair	Contact Stabilization	5,000-100,00	
Hays Process Company	Hays Submerged CA	Contact Stabilization	1,000-40,000	
Permutit	Ameodyne Products	Contact Stabilization & Extended Aeration	1,000-10,000	23 sizes
Water and Sewage, Inc.	Nautilus	Contact Stabilization	Up to 10,000	

The basic features of all packaged extended aeration sewage plant are the aeration compartment and the final settling or clarification compartments shown in Figures 1 and 2.

Raw sewage flows directly into the aeration compartment without having been subjected to primary sedimentation. The raw sewage is mixed with the return sludge to form the mixed liquor within the aeration chamber and is aerated for approximately 24 hours. When the aeration period is completed, the mixed liquor flows into the sedimentation chamber where the suspended solids and liquids are separated by gravity. The separated solids are returned to the aeration compartment as returned sludge while the liquid flows out of the plant as the effluent.

Accessories that may be used are a bar screen, comminutor, sand filter, or a lagoon (to further stabilize the plant effluent before final disposal), and a chlorinator. Commonly included are foam control sprays and skimmers to remove floating material from the surface of the sedimentation compartment. (Ref. 2)

Table I includes the different sized treatment plants that utilize the extended aeration principle for treating domestic waste waters.

II. Biosorption or contact stabilization is defined as a form of the activated-sludge process where aeration is carried out in two phases in two types of tank: the contact tank where raw sewage solids

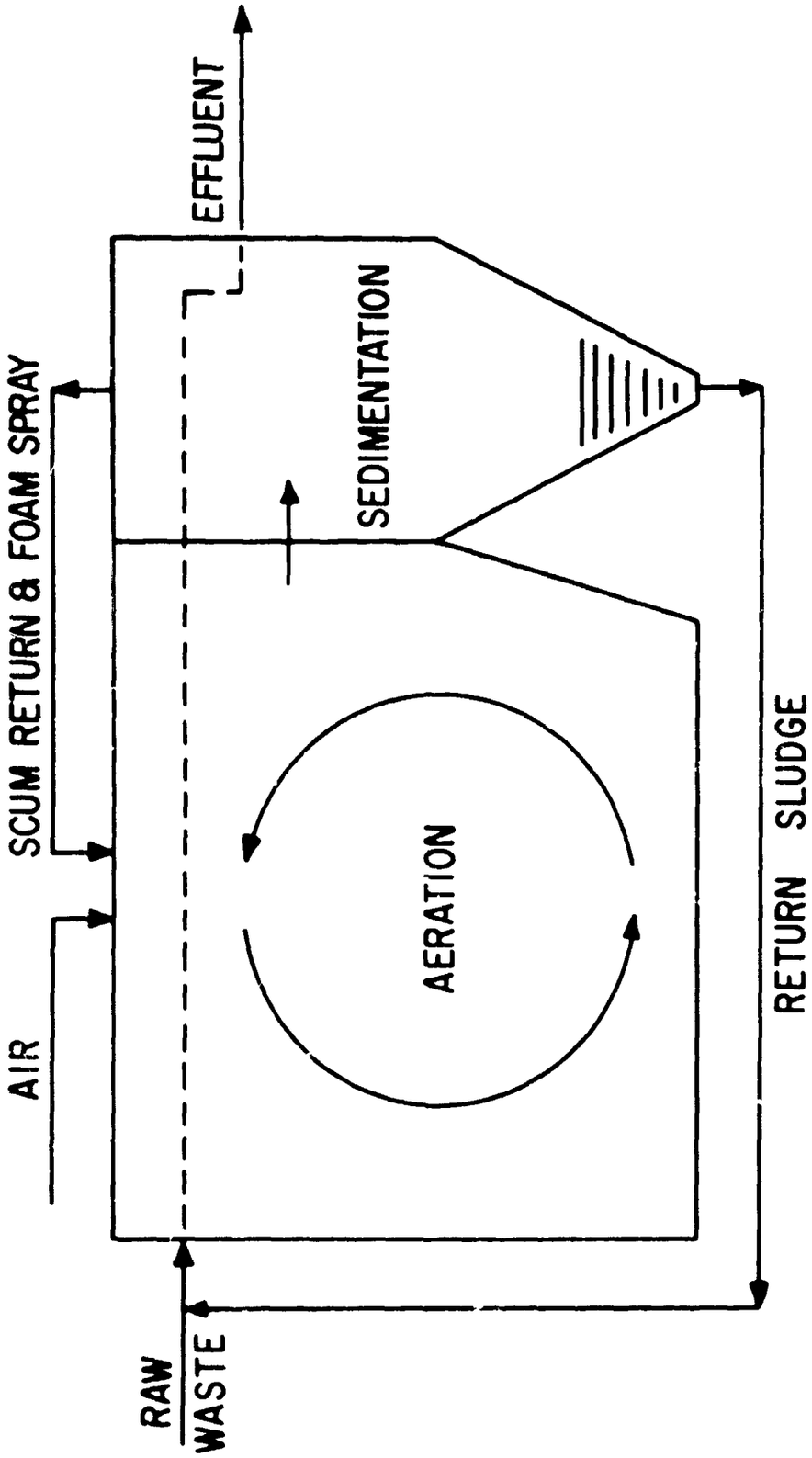

FIGURE I SIMPLE EXTENDED AERATION PLANT

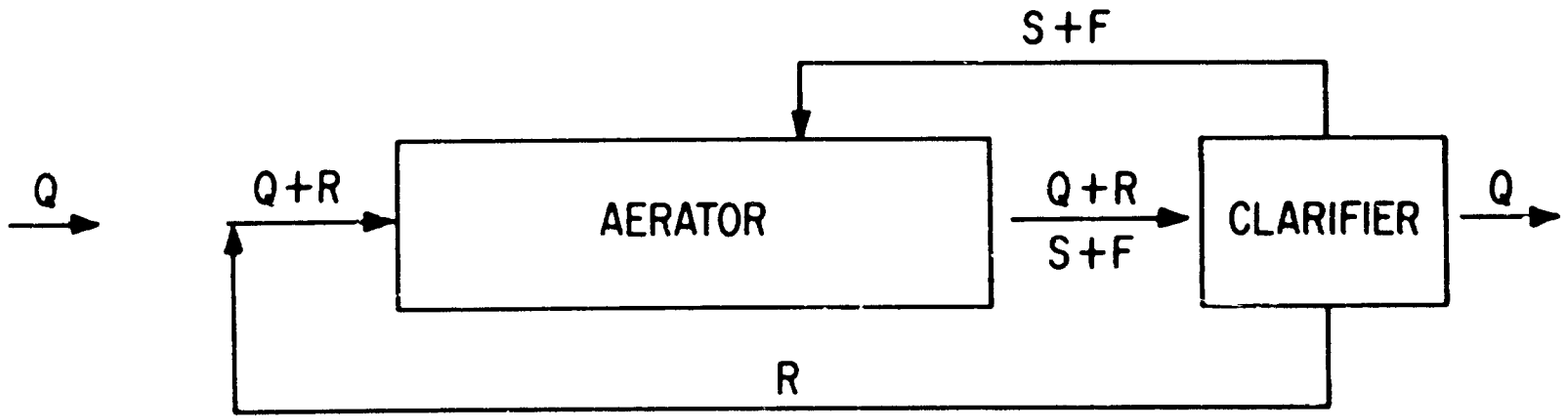

WHERE: Q = INFLUENT FLOW RATE
R = RETURN SLUDGE RATE
S = SCUM RETURN RATE
F = FOAM SPRAY RATE

FIGURE 2 FLOW RATES, TYPICAL EXTENDED AERATION PLANT

are absorbed and adsorbed on the biomasses; and the stabilization tank where the solids which have been removed in a final settling tank are partially stabilized by reaeration before being recombined with the incoming raw sewage. An aerobic digestion tank may be included as a part of the process. (Ref. 6)

The contact stabilization plant process has three compartments under aeration. Raw sewage flows into the contact aeration compartment and is mixed at the entrance with reaerated or stabilized activated sludge. The mixed liquor is kept under aeration and remains in the contact aeration compartment for one-half to one and one-half hours, depending on the rate of flow of stabilized sludge into the compartment. The mixture then flows into the clarifier for sludge separation. A relatively clear effluent of low organic content flows over a clarifier weir. Settled sludge is collected from the bottom of the clarifier and returned to the stabilization compartment by an airlift pump. After four to six hours of aeration, it is again mixed with raw sewage flowing into the contact chamber. Not all the sludge collected in the clarifier is returned to the stabilization compartment. A portion of it is diverted to the third aeration compartment, an aerobic digester, where the volume of sludge is reduced by auto-oxidation. When facilities are provided for separating the digested sludge from the supernatant, the latter is returned to the stabilization compartment to be combined with the sludge

returned from the clarifier. Periodically some sludge has to be wasted from the digestor. Figure 3 illustrates the flow through a plant using the contact stabilization method. Table II includes the different sized treatment plants that utilize the contact stabilization process for treating domestic waste.

III. Special Devices.

1. The Oxidation ditch is a modified form of the activated sludge process, and may be classified in the complete mix, longterm aeration group. This is not a mechanically aerated lagoon because the settled solids produced by the process are continually returned to the ditch to provide a high solids concentration in the aeration basin. This process provides a simple, compact, rugged and virtually fool-proof plant that is capable of 90 to 97 percent reductions of BOD_5 and suspended solids.

Normally a primary settling tank is not used in the oxidation ditch process, shown schematically in Figure 4. Raw sewage pases directly through a bar screen to the ditch. The bar screen is necessary for the protection of the mechanical equipment such as rotors and pumps. The oxidation ditch forms the aeration basin where the raw sewage is mixed with active organisms. The rotor is the aeration device that entrains the necessary oxygen into the liquid in the ditch. The velocity of the liquid in the ditch must be kept above a minimum of approximately one

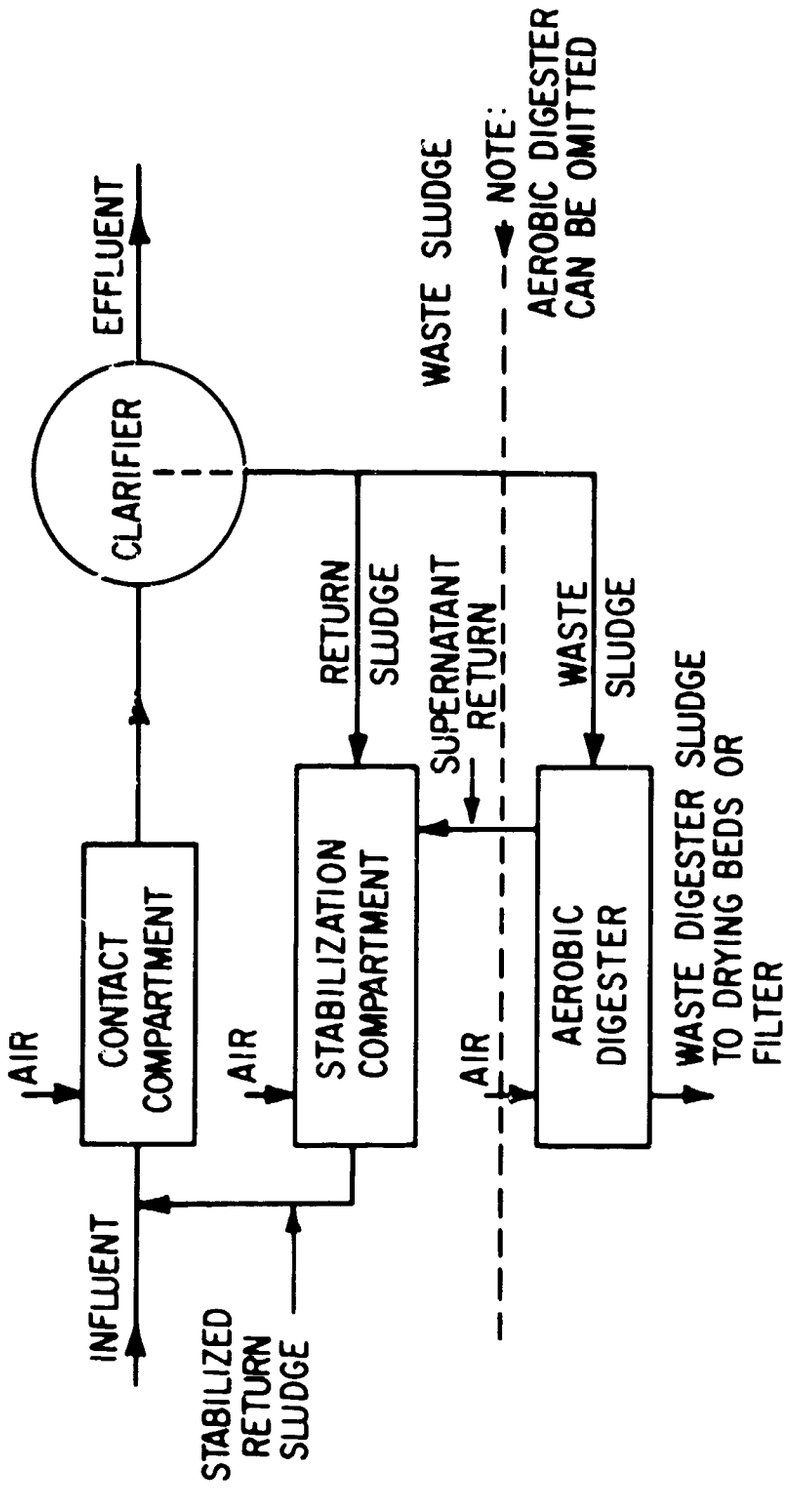

FIGURE 3. CONTACT STABILIZATION PROCESS FLOW DIAGRAM

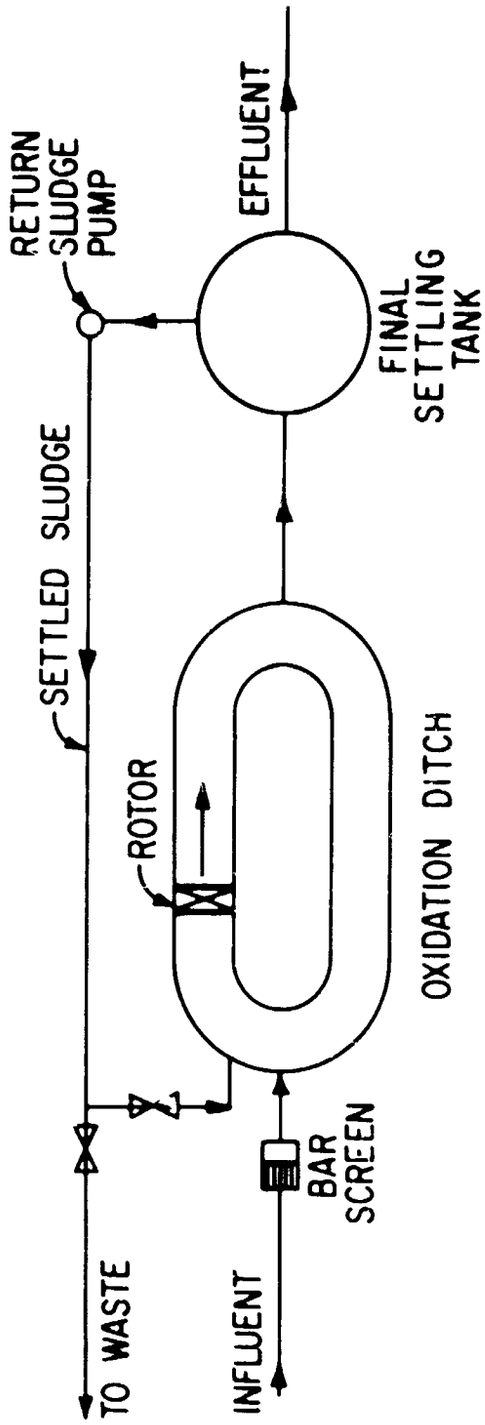

FIGURE 4. OXIDATION DITCH PLANT LINE DIAGRAM

foot per second to prevent settling of solids. The ends of the ditch must be well rounded to prevent eddying and dead areas, and the outside edges of the curves must always be given erosion protection.

The oxidation ditch is operated as a closed system and the volatile suspended solids will increase until it will be necessary to periodically remove some sludge from the process.

The compacted earthen ditch may be lined with poured concrete, plastic liners, shotcrete, asphalt, wood or preformed materials. Clay has also been used as a liner. (Ref. 5)

The process, with its longterm aeration basin, is designed to carry mixed liquor suspended solid concentration of 3,000 to 8,000 mg/l. This provides a large organism mass in the system. The food to organism ratio or loading factor is low, ranging from 0.03 to 0.1 lb. BOD_5/day/lb volatile suspended solids. In addition, because of the low food to organism ratio, the growth of volatile sludge is relatively low because of endogenous respiration. The volatile sludge is less reactive and has a lower BOD_5 than equivalent weight of a sludge produced by processes having larger loading factors. Therefore, the solids lost from the system over the effluent weir in the final settling tank will have a lower BOD_5 than the same quantity lost from the system by other processes.

Developed from the oxidation ditch principle is the extended aeration aerotor plant. Figure 5, illustrates the flow diagram of this system.

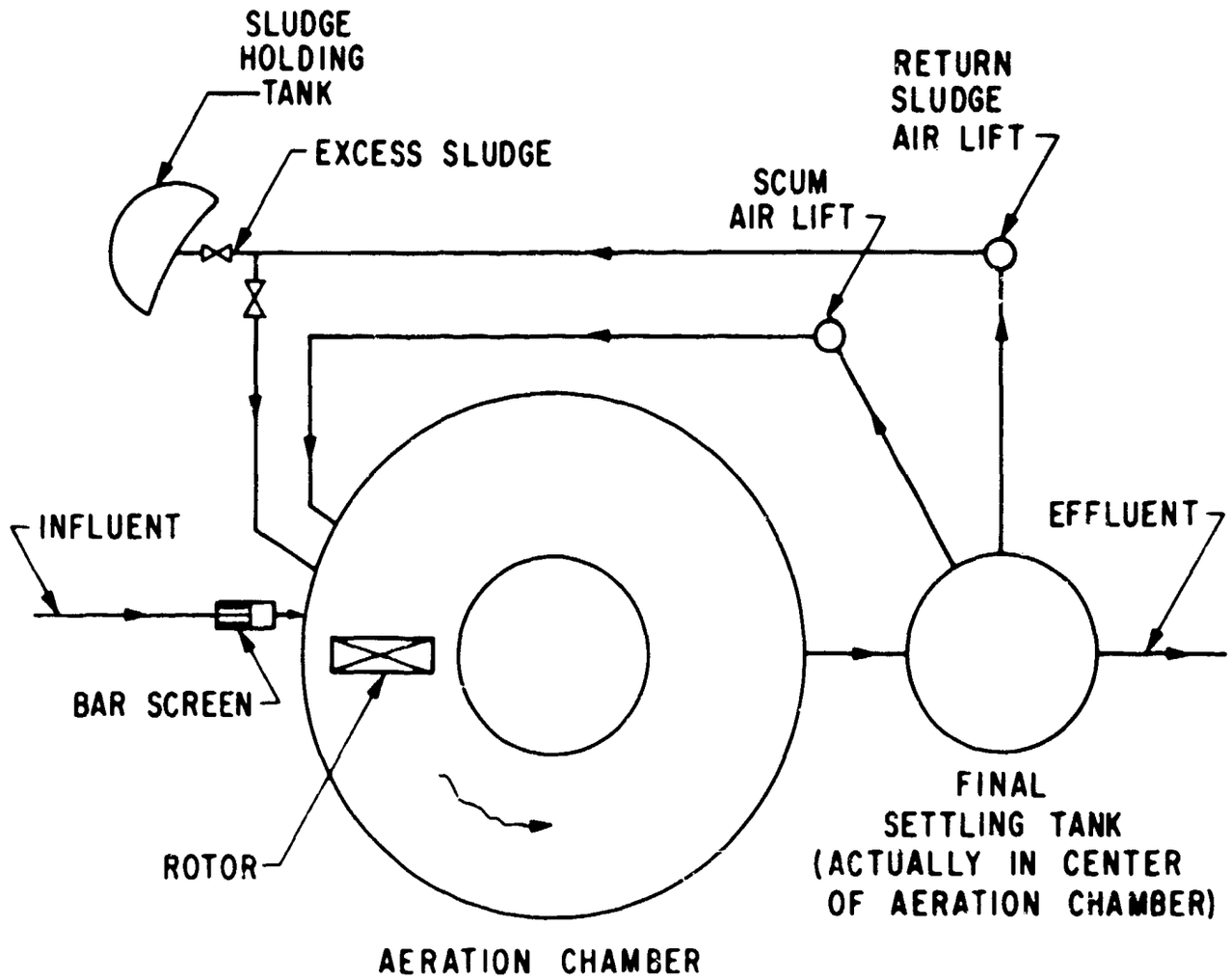

FIGURE 5 LINE DIAGRAM
AEROTOR PLANT

The process utilizes a modified form of the activated sludge process and may be classified in the complete mix, longterm aeration group. The plant provides a simple, compact, rugged, odor free and virtually tool-proof operation that is capable of 90 to 97 percent reductions of BOD and suspended solids. The largest plant comes with a capacity to handle 1000 capita per day or 100,000 gallons per day. (Ref. 7)

2. Aerated Lagoon. This method is also feasible. A rotor supported by structural members could be used. A second configuration that could be used where electrical power is absent would be the use of an anchored raft powered by an outboard gasoline engine. The raft would be anchored to a pipe column by the use of a swivel arrangement which would be located in the center of the lagoon. Figure 6 illustrates this method of aerating the liquid. The outboard engine and raft would travel in a circular motion inducing a circular motion to the liquor, while the outboard motor propeller adds the needed oxygen to the mixture. A trash trap would be used at the influent entrance to prevent foreign material from damaging the outboard motor or propeller.

3. Rotating Biological Contactor. This device can be considered a combination of the trickling-filter and the activated-sludge process. It exhibits a degree of flexibility and control over the biological process that may prove to be beneficial to the engineer and plant operator. The process is called the rotating biological surface (RBS) waste-water treatment.

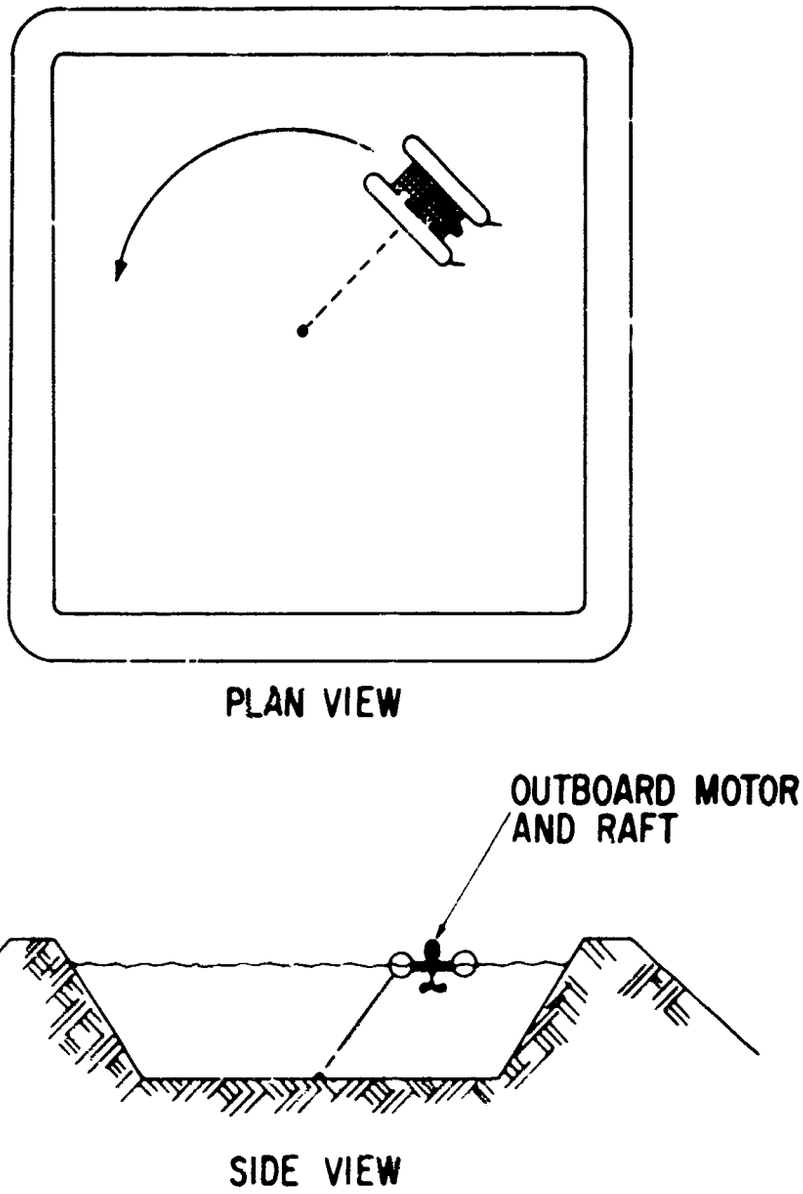

FIGURE 6. AERATED LAGOON

Physically the RBS is a series of closely spaced vertical discs, mounted on a horizontally driven shaft. The shaft is supported by bearings and is slowly rotated by power equipment. The rotating shaft alternately dips the disc surfaces into the waste material and then into the air. Waste material continuously flows parallel to the discs. The waste level is slightly less than half the disc diameter. Intimate contact between the waste material and disc surfaces is provided by contoured tank bottoms.

During initial operations, a biomass colony is quickly established on the disc surface. These colonies of bacteria will continue to propagate (in the presence of adequate oxygen and food material) on both sides of the discs. The growth produced is a uniform mass which smoothly covers the entire disc surface. The RBS does not need to be seeded to establish the biological growth, providing the waste material is biodegradeable and has adequate nutrients. The biomass on the discs oxidizes the waste material into metabolic by-products and excess cell material. The treated water containing these solids is directed to a secondary clarifier for separation.

The wet surface on the biomass removes the oxygen from the air after rising from the waste material. The thin waste film on the surface is extremely rich in oxygen and contributes to the high organic and oxygen uptake of the biomass. The oxygen-rich film penetrates the biomass through mixing and diffusion into its innermost colonies. (Ref. 8)

The advantages of this type process are as follows: a) The retention time or volume of waste material retained is very short. Using domestic waste water, the retention time is less than 45 minutes to achieve a 90 percent BOD_5 reduction in the system. b) Bacterial density of the discs is between 18,000 and 30,000 PPM active organisms. c) The components of the RBS are relatively simple and inexpensive. d) Because the RBS discs are molded of low density expandable polystyrene material, they have a bouvancy of 60 pounds per cubic foot. The only power required to rotate the RBS is the power to overcome transmission efficiencies and bearing friction. e) Generally speaking, checking and changing transmission oil, and bearing and chain greasing is all that is required. f) One of the most important benefits of the RBS process is that it requires very little operator attention. g) The physical configurations of the RBS lends itself extremely well to process staging.

Since manufacturing procedures dictate modules, or packaged fabrication for economies, other advantages may be derived. Units of discs and shafts are shipped assembled. They may be shipped with or without their own tankage. Fiberglass, plastic lined tanks or precast concrete tanks may be supplied. The packaging concept will enable users to add units in increments as the demand requires. (Ref. 8)

IV. Summary.

Table III was produced from information furnished by the manufactures on the "Product Questionnaire," and from the NSF certification

booklets. Reference 5 describes the observations of the Ohio University study and lists 20 random dates of sampling of the oxidation ditch effluent over a nine-month period. Recorded under the oxidation ditch column are the averages of the 20 samplings. The data shown under the columns of the NSF tested plants are averages of tests made every day over a period ranging from 29 days to 39 days.

Table IV was developed from the ASCE Journal concerning tests conducted by the Florida State Board of Health. The sampling was conducted at random dates over a period of one year. The data shown in the table are averages. These data are not comparable since influent loadings and testing conditions differ, sampling methods are unknown, and actual tests performed on the effluent are unknown. Nevertheless, the resultant averages illustrate that the performance of the treatment plants in most cases produces approximately a 90 percent reduction in BOD_5 and suspended solids.

Appendix III is a list of firms that manufacture packaged waste water treatment plants. It is fairly complete but by no means all inclusive. It was not the author's intention to omit any industrial concern.

Table III. Package Treatment Plant Performance (Averages)

MANUFACTURERS	+Lakeside Engineering Corp. Oxidation Ditch	Aerotor Plant	+Eimco Model 15	+Neptune Micro Floc	+#Dorr-Oliver, Inc.	*Chicago Pump, Hydrodynamics Division	*Can-Tex Industries	*Aer-O-Flo Corp.	*Davco Manufacturing Corp.	*Smith & Loveless	*Lyco Systems, Inc.	*Water Pollution Control Corp. (Sanitaire)	*Mack Vault Company
PERFORMANCE													
BOD_5 (Mg/l)													
Influent	226	200	200	200	240	174	145	128	145	145	138	144	145
Effluent	7	10	20	3	5	14	6	14	6	8	9	16	13
%Reduction	98	94	90	98	98	90	96	89	96	95	93	96	91
Suspended Solids (Mg/l)													
Influent	326		200	220	250	175	165	157	176	176	170	165	176
Effluent	5		30	5	0	20	10	15	13	14	12	13	16
%Reduction	96		85	98	100	88	94	91	93	92	93	92	91
Volatile Solids (Mg/l)													

Note: + Answered the Questionnaire
Independent Test According to STM of WW 12th Edition - 6 month test duration
* NSF Certification - 5 week test duration

Table III. Package Treatment Plant Performance (Averages) (Continued)

Influent	100	100		155	140	127	130	122	137	140	127	137
Effluent	10	10		0	15	7	11	9	10	9	8	11
%Reduction	70	70		100	89	95	92	93	93	93	94	93
NH_3-N (Mg/l												
Influent	33	10	20		16.4	15.8	13.8	16.3	16.3	14.9	15.8	16.3
Effluent	.1	1	1		1.1	1.1	0.7	0.7	1.1	1.1	0.8	0.9
%Reduction	99	70	95		93	93	97	96	93	92	95	95
PO_4-R (Mg/l)												
Influent		30	8		51	50	41	52	51	43	51	51
Effluent		27	7		35	36	29	36	35	29	37	35
%Reduction		10	12		32	27	30	31	33	32	27	32
COD (Mg/l)												
Influent		300		700	306	300	315	276	302	315	300	302
Effluent		30		54	53	43	38	37	50	44	45	37
%Reduction		90		92	83	85	88	87	83	86	85	71
pH												
Influent		7.0	7.5	7.3	7.4	7.4	7.4	7.3	7.3	7.6	7.4	7.3
Effluent		7.0	7.0	7.2	7.3	7.2	7.4	7.1	7.1	7.8	7.4	7.1
Flow Capacity (1000 GPD)	287	-	3	-	9	7.5	5	10	2	6	16	5
Number of Tests	20	-	42	-	39	31	30	34	34	31	29	34

Table IV. Plants Tested by the Florida State Board of Health.

Manufacturer and Test Location	Performance	BOD_5 (ppm) Influent	Effluent	%Reduction	Suspended Solids (ppm) Influent	Effluent	%Reduction	Settle Solids (ppm) Influent	Effluent	%Reduction	pH Influent	Effluent	Flow Capacity (1000 GPD)	Number Tests
Marolf - Yocam Battery Plant, Tampa		181	18	90	114	32	73	.75	.07	91	7.8	6.7	9	6
Chicago Pump - South Gate Subdivision Fla.		172	11	94	179	46	75	6.0	.1	99	6.9	7.2	60	6
Yeomans Bros. - Castoways Motel, Miami Beach Fla.		373	109	71	269	97	65	7.1	1.5	80	7.0	6.9	20.5	11
Waller Process - Anacapri Motel, Fort Lauderdale Fla.		345	31	92	333	66	81	22.9	.35	99	6.9	7.2	25	12
Smith & Loveless - DeSoto Lakes Mobile Homes Broward County, Fla.		306	44	86	218	39	82	11	.5	96	7.8	7.3	20	21

SECTION III

DISCUSSION

The manufacturers who completed the "Product Questionnaire" or who furnished catalogues supplied answers to the general questions needed to provide a more complete picture of their packaged treatment plant.

With the exception of the gasoline-powered aerator, all plants require either 110 or 220 volt electrical power. The power furnished by a specific base in a particular locale would be a design problem and requirement of that base. Figure 7 compares plant size in 1,000 gallons per day versus operating power in kilowatt hours.

Shipping volume varies greatly with the type of plant that has been selected. Figure 8 is furnished to indicate the volume required when planning to transport a prefabricated or sectionalized plant. Shipping of a plant has its problems. The Santa Fe Railroad's local office in Albuquerque was contacted for information concerning clearance widths and heights allowable for transportation of bulky hardware. The maximum allowable width in a boxcar is eight feet and the height allowance is so low that it precludes the boxcar for shipping a packaged treatment unit. A flatcar can handle a height of twelve to thirteen feet and a width of eleven feet. This is ample to transport most sections of a treatment plant. Figure 9 illustrates expected shipping weights per 1,000-gallon per day plants.

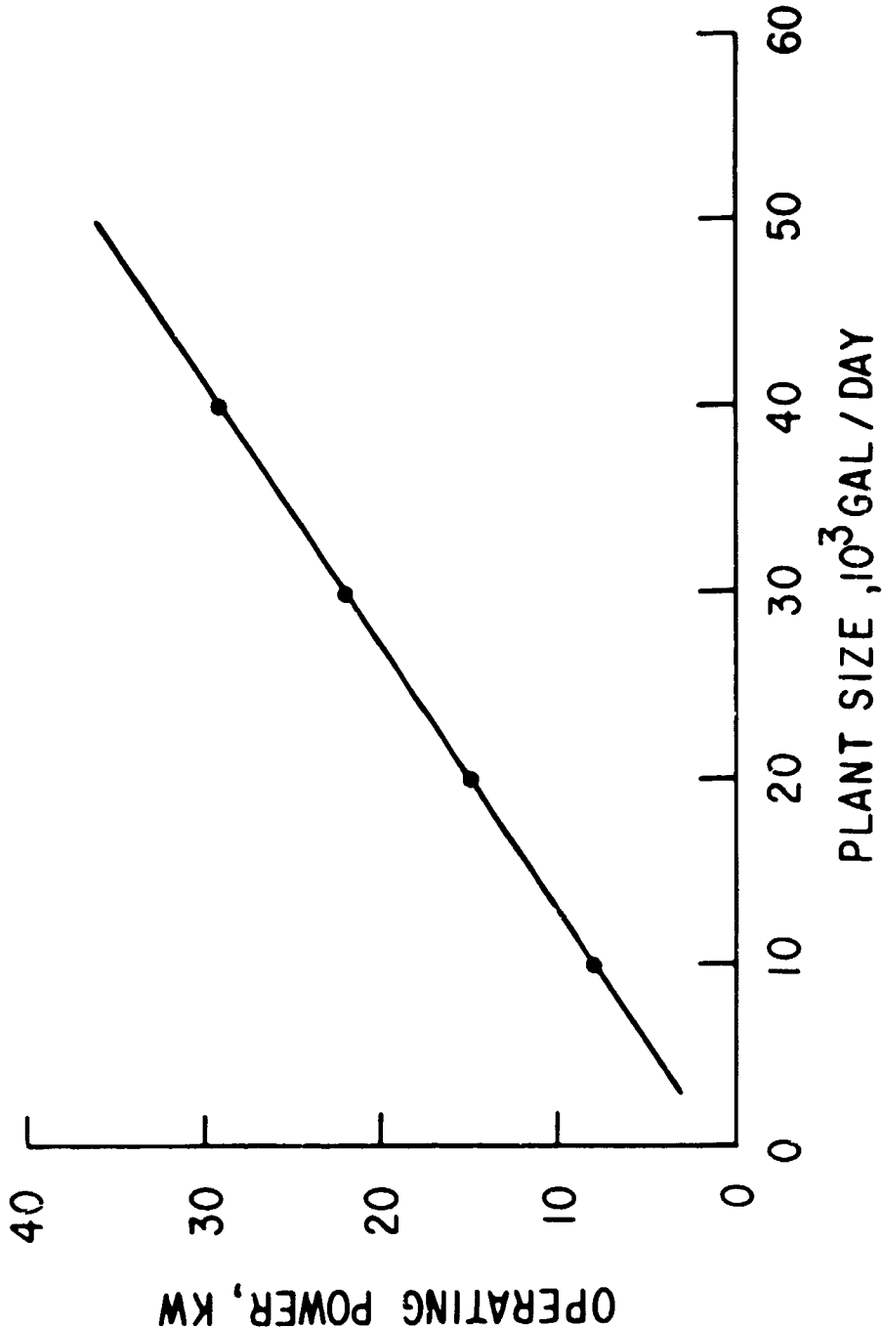

FIGURE 7 PACKAGE WASTE TREATMENT OPERATIONAL POWER REQUIREMENTS

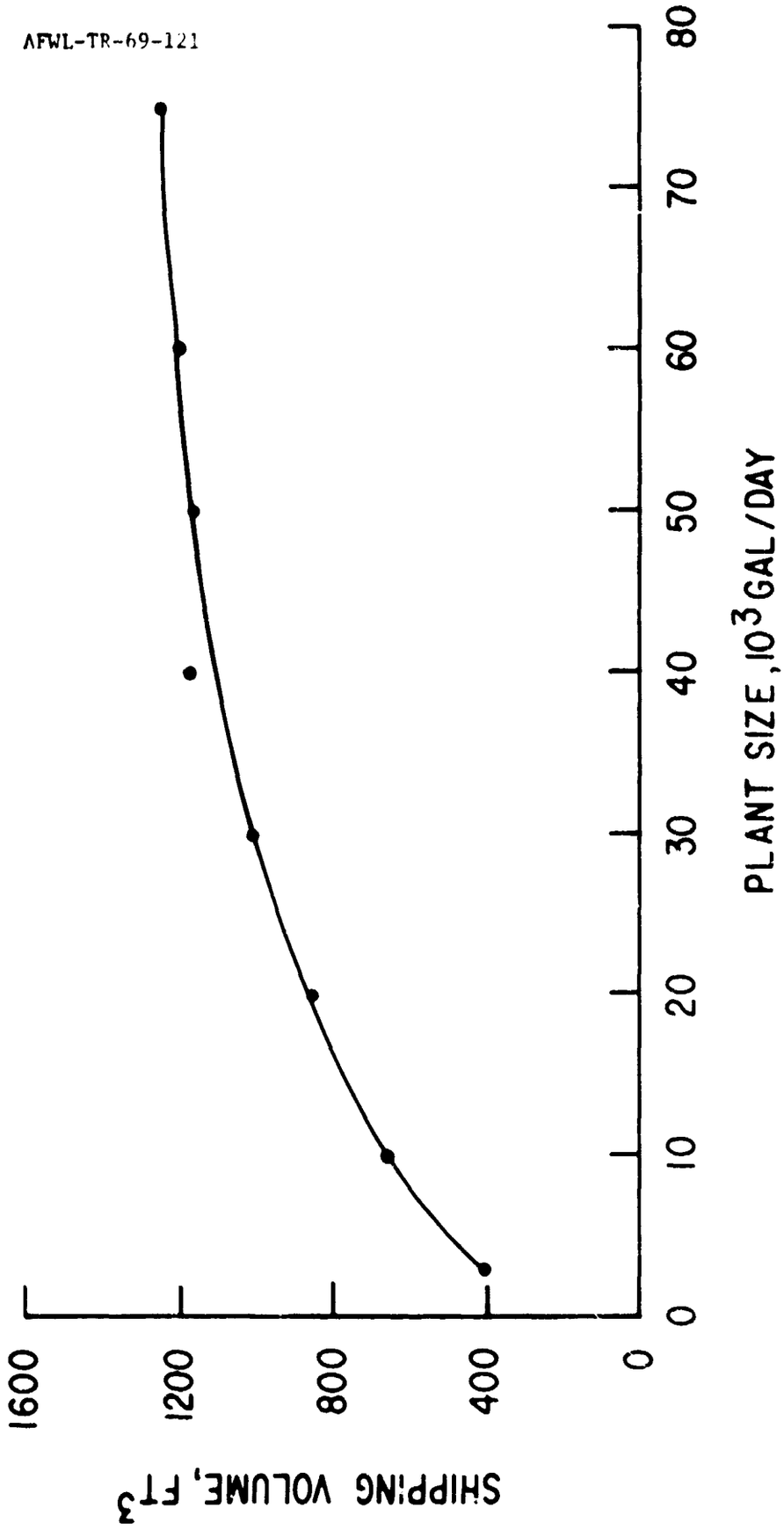

FIGURE 8 SHIPPING VOLUME, FT^3

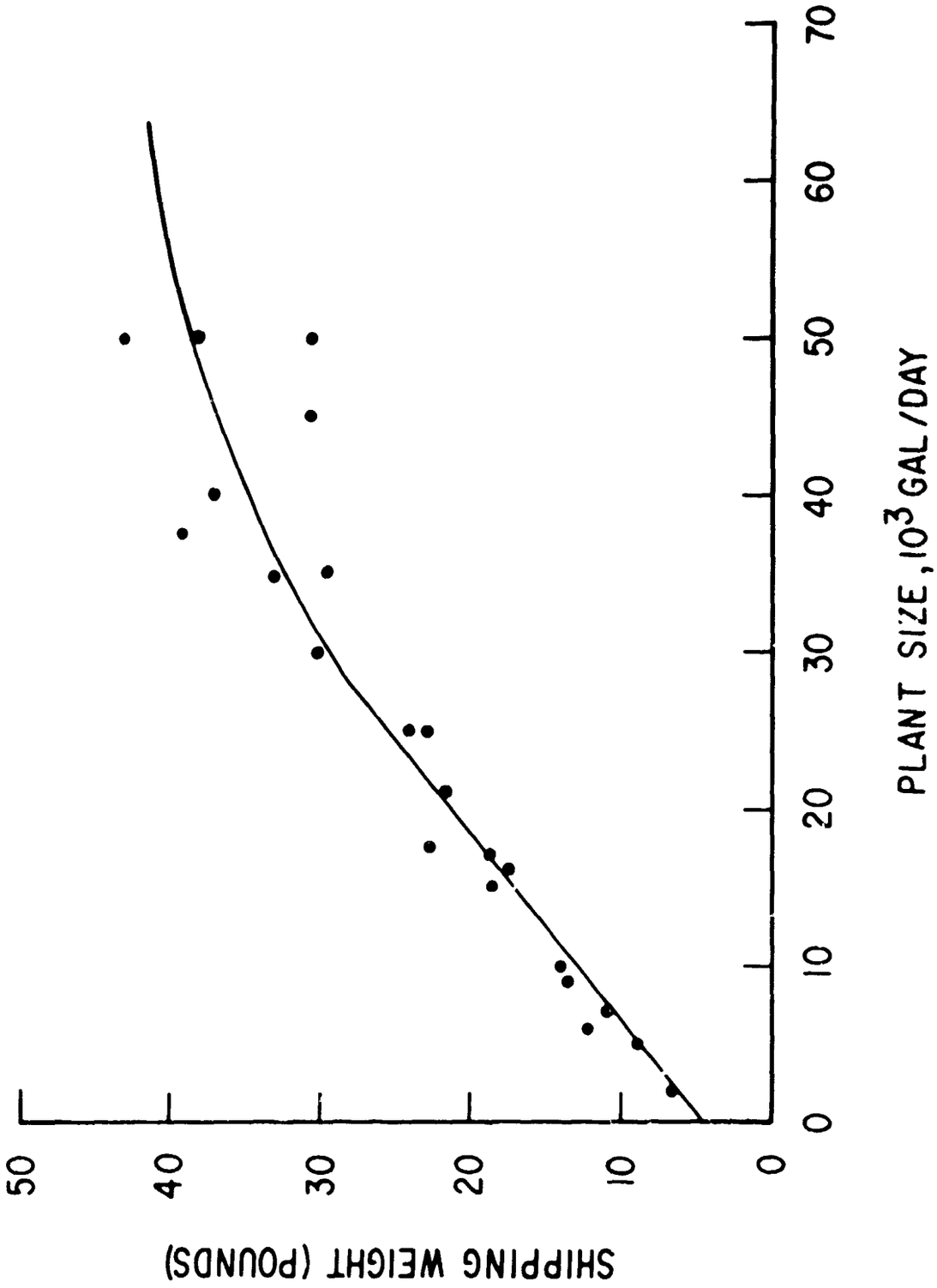

FIGURE 9 SHIPPING WEIGHT OF PLANT

One manufacturer states, "Because of shipping limitations of regulatory authorities on overall size of truck and rail shipments, it is necessary to ship several items of equipment or unit assemblies unmounted to avoid exceeding height or width limits."

The rotor and support structure for the oxidation ditch and rotating disc are not included in Figure 8. They would occupy a much smaller volume and area than the extended aeration plants. The volume curve flattens out considerably as the larger capacity plants are approached. The larger plants are fabricated in sections for field erection and would take less shipping space or volume ratio to capacity than the smaller extended aeration plants which are prefabricated at the factory.

All the plants require some concrete foundation work. The oxidation ditch and the rotating disc aeration plants require concrete pads to support the rotor or discs and their supporting structure and a foundation pad if a clarifier is used. Both the extended aeration and contact stabilization plants normally require a concrete foundation or pad. Usually the manufacturer will recommend the necessary type of foundation required for a particular plant.

Figure 10 illustrates the estimated cost of an installed treatment plant versus plant size. The oxidation ditch and rotating disc costs are

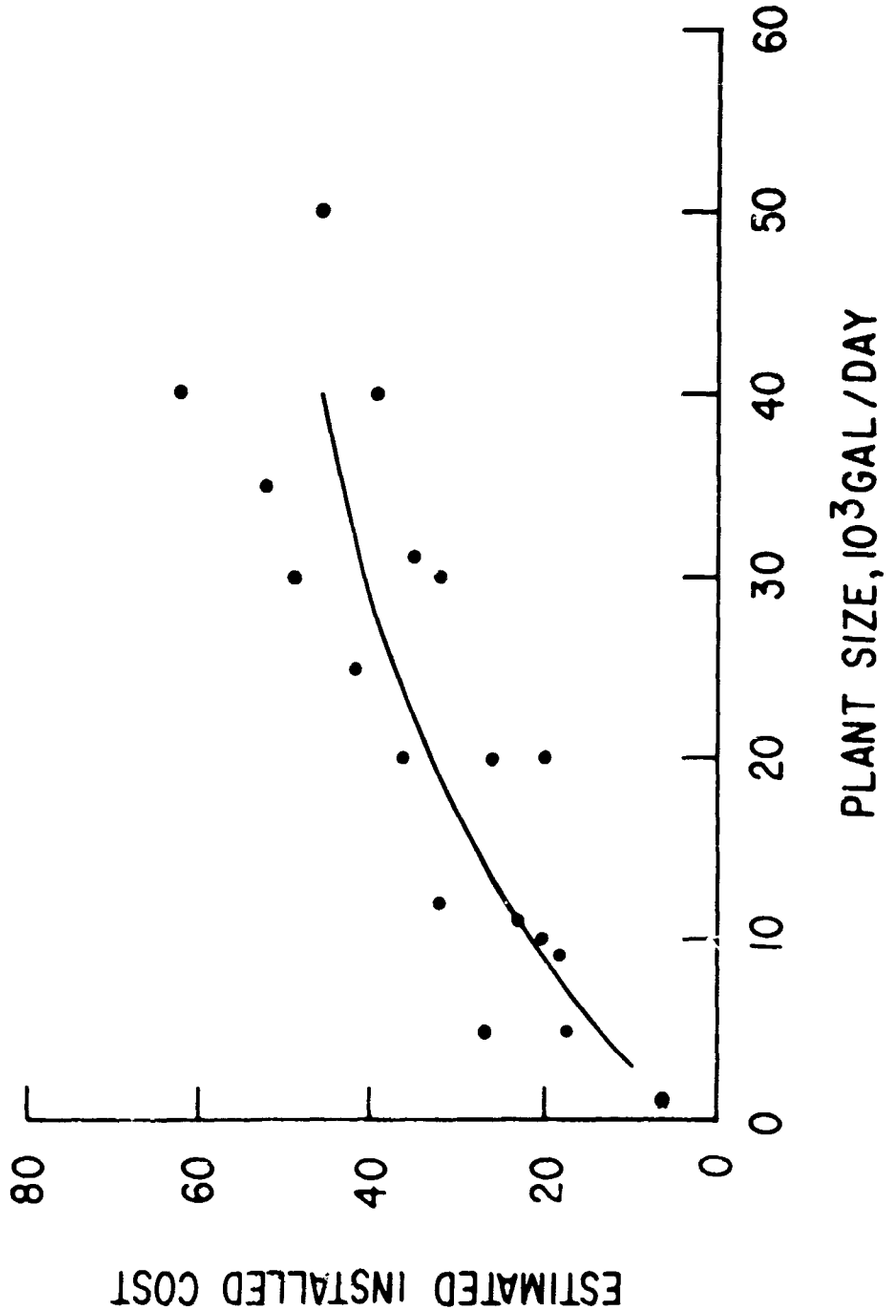

FIGURE 10 PACKAGE WASTE TREATMENT CAPITAL COSTS

not included in figure 10, but table V illustrates actual contractor bid proposals for construction, over a cross section of the United States.

Table V

Oxidation Ditch Construction Cost Figures. (Ref. 5)

	DESIGN POPULATION	CONTRACTOR'S BID * $	$ COST PER CAPITA
Godley, Texas	500	22,500	45.00
Graford, Texas	600	26,500	44.20
Morrison, Colo. **	700	27,000	38.60
Blossom, Texas	1,000	27,000	27.00
West Salem, Ohio	2,000	70,656	35.33
Laurel, Nebraska	2,000	65,6[illegible]	32.83
Stayton, Oregon	3.500	74,402	21.20
Glenwood, Minnesota	4,300	69,000	16.00
Fort Stockton, Texas	12,500	167,500	13.40

* Excludes the cost of land, legal and engineering fees.
**Bid but not built.

Under normal conditions, the construction costs of the oxidation ditch type plant is 20 to 33 percent below that normally expected for other treatment plants capable of producing an effluent equivalent to the oxidation ditch process.

SECTION IV

APPLICATIONS

All the curves presented in the previous sections are common to each other on the basis of flow capacity. The manufacturers design their "packaged" treatment plants on a factor of 100 gallons per capita per day. Air Force Manual 88-11 lists 85 GPDC for fixed installations and 100 GPCD for permanent installations. In limited-war areas the design factors could be less than that used for fixed installations.

One of the questions asked on the "Product Questionnaire" was whether the mechanics needed any special training to erect a treatment plant in the field. Those that answered the questionnaire stated that specific training in erecting a treatment plant was not required. It is a logical assumption that the artisans are skilled in their trade. Military "Red Horse" or "Prime BEEF" teams should have the skill to erect such a plant. Erection instructions as well as operating instructions are furnished with each plant. Figure 11 is included to illustrate erection time versus plant size.

The operators of the plants do require some training in plant operation. In most cases the company furnishing the plant will send a representative to instruct an operator on the peculiarities of a

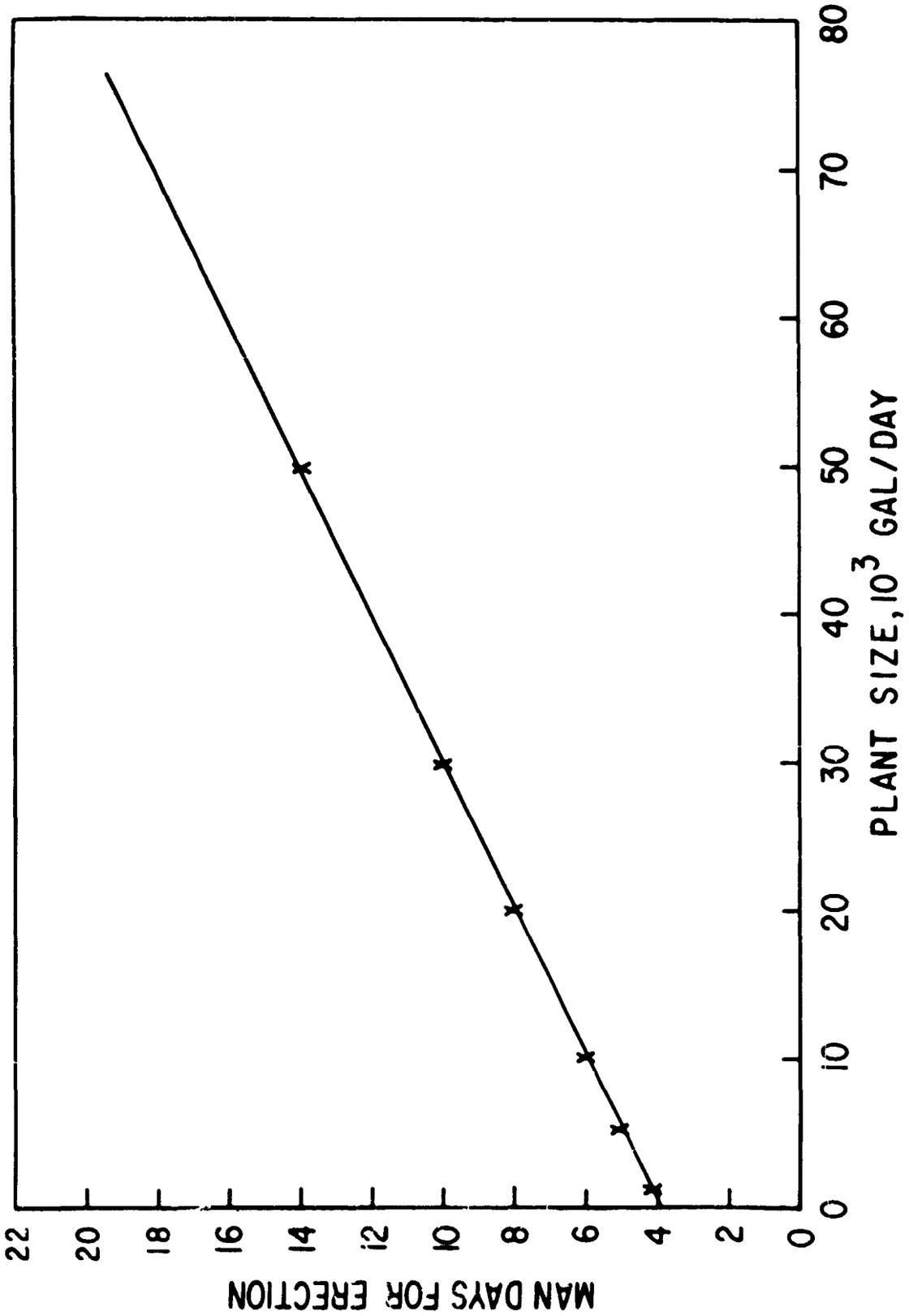

FIGURE 11 PLANT ERECTION TIME

specific plant. The operation of a contact stabilization plant is more complex than that of an extended aeration plant.

In planning to use any type of process mentioned in this paper, consideration must be given to the periodic removal of sludge. Each plant in time will require some sludge removal: therefore, an area for sludge drying beds should be included in the design. Because the aeration process produces less overall sludge, the drying beds need not be as large and extensive as those used in a conventional treatment system.

In transporting any of the plants, regardless of capacity, certain portions of the plant are disassembled for crating and handling. Usually these are portions of the superstructure that protrude above the tank structure. In any event, some assembly at the construction site is required. From the review of literature it has been found that a treatment plant can be found to satisfy the needs of almost any population requirement which exists. Plants can be found to serve a population which produce 200,000 to 300,000 gallons per day by using smaller plants in parallel. A splitter box device would be used in conjunction with the smaller plants directing the flow of waste water equally. An effluent collection system would then be used with a single disposal pipe to the final effluent receiving stream.

The "packaged" treatment plant can produce a high quality effluent. The effluent from these plants, no matter what process is used, usually contains less than 10 percent of the influent BOD_5. Such plants have been successfully used in many small communities and also in many industrial waste applications. They may be used in dense population areas in military cantonments. By dispersing smaller plants to various high density areas of an installation, the need for a large capacity single plant serving the base is reduced.

The Air Force is represented on the National Sanitation Foundation's steering committee by a member of the Civil Engineering Branch of the Air Force Weapons Laboratory. The Air Force's needs and requirements will be presented through this representation at the NSF.

APPENDIX I

Copy of letter from Department of the Air Force
Headquarters Pacific Air Forces Director of Civil Engineering

DEPARTMENT OF THE AIR FORCE
Headquarters Pacific Air Forces
APO SAN FRANCISCO 96553

Reply to
Attn Of DCE/SG

Subject: Improved Utilities Systems for Extended Contingency Operations

To: HQ USAF (AFOCE/AFMSG)

1. The timely provision of adequate utilities systems is the most unresponsive area we have encountered in supporting extended contingency requirements in SEA over the past four years.

2. Our reaction time for vertical facilities has continually been improved by the use of pre-engineered structures and other transportable shelters. A quantum jump in this area has been realized through the development of modular dormitories, officers' quarters, crew quarters, dining halls and hospital facilities. On the other hand, package utilities systems to support such a buildup or for intermediate length deployments have seriously lagged in development. Once initial deployments are supported through the use of Army type field equipment, i.e., field erdalators, burn buckets, etc., no intermediate, quickly erected package systems for water and sewage treatment are available. As a result, conventional brick and mortar plants must be programmed and constructed from "scratch" to satisfy the longer term needs. Meanwhile, the initial field "lashups" are simply expanded by any means possible to support the constant growth that invariably takes place. This has been and is a matter of grave concern to the Medical Service due to high endemicity of enteric disease.

3. The need clearly exists for development of packaged plants for water and sewage treatment that are similar in concept to the modular/relocatable approach so successfully used for vertical facilities. This approach is already being taken for power generation to eliminate the need for time-consuming and unresponsive construction of stationary base power plants. Such an approach to water and sewage will eliminate the need to build conventional facilities for theater of operation environments, except where it is known that major bases will continue in service for periods of well over five years. Even in this case, the package units will provide timely interim treatment to meet established medical standards during the long lead time associated with conventional design and construction.

4. Our experience in programming, designing and constructing conventional water and sewage systems in SEA has clearly established that, in spite of the best planning, excessive lead times do exist. This is true because of a variety of reasons such as:

a. Design and construction are far more specialized and complex than for most other base facilities.

b. Many of the components for conventional systems are not readily available off the shelf.

c. The ability to "get by" with temporary field lashups often causes these vital utilities to be slipped in favor of items that are readily attainable and seem more closely associated with the mission.

d. Cost escalation tends to eat up funds reserved for utilities as while these are only in the design stage, other facilities are being completed.

5. As a base is developed and expanded over an extended period, new missions with dramatic impacts on base population become a way of life. This coupled with the increasing numbers of Local National employees causes water and sewage treatment to become more and more critical from a public health point of view - both as concerns the protection of the on-base population and the surrounding communities. Basic field sanitation practices at a fixed installation can only be effective for a limited period of time without dangers of the health hazard rising sharply. To forestall this undersirable situation in future deployments, we propose that research and development be initiated on the following:

a. A package water plant that can treat water from a surface source equivalent to the obtained by conventional treatment means. Both prechlorination and postchlorination provisions are essential. With separate detention, this same plant can be expected to adequately treat iron-bearing ground water which is a common requirement. Each package unit should be designed to support a set number of personnel consistent with transportability to the site and erectability on the site. As

populations increase, a package unit is simply added to the system when appropriate. Our experience in SEA indicates that a single package to support approximately 2000-3000 personnel is highly desirable. This type of a unit would have put us in business for a considerable period of time at all SEA bases. Even today, two to three package units in this order of magnitude would handle most bases. The package plant should be designed to be aggregated from readily available components or as a pre-engineered package developed by industry. The ability to relocate the equipment should be a consideration, but based on our experience in SEA, not an overriding one. In summary, what we need is a product either prepositioned or available in a timely fashion that can be readily transported overseas, erected with a minimum of specialized know-how and operated by personnel with normal training in career field AFSC 563XC.

b. A package sewage plant that parallels the above is also required. The package sewage plant should be developed to provide approximately 90 percent reduction of the biochemical oxygen demand in airbase sanitary sewage. Unit capacity should if practical be on the same basis as that provided for water plants. Again, availability, transportability, ease of erection, and simplicity of operation are the key points to be considered in a package sewage treatment unit.

6. Request a formal development program be initiated with industry to achieve a package water and sewage treatment plant capability as outlined above. We believe such a development is a key element to timely, orderly and safe development of bases in the theater of operations.

FOR THE COMMANDER IN CHIEF

ARCHIE S. MAYES
Brigadier General, USAF
DCS Civil Engineering

APPENDIX II

PRODUCT QUESTIONNAIRE

1. Trade name and/or models designation.
2. Population capacity and gallon per day capacity.
3. Cost per unit.
4. Weight of plant assembled.
5. Shipping floor area and volume.
6. Dimensions of assembled unit or units.
7. Is plant pre-assembled?
8. Does manufacturer assemble plant? If customer assembled, do the mechanics require special training?
9. How many man days required for assembly?
10. Foundation requirements.
11. Power requirements (frequency and wattage - 50/60 or 400 cycle).
12. Modular or add-on capabilities. Can units be placed in series to increase capacities?
13. What treatment process is used?
14. Type chemicals used in treatment process or trade name of product. Quantities required per mgd treated.

MANUFACTURER'S PERFORMANCE DATA

	Influent	Effluent	% Reduction	Test Procedure and Duration
BOD (mg/liter)				
Suspended Solids (mg/l)				
Volatile Solids (mg/l)				
NH_3-N (mg/l)				
PO_4-P (mg/l)				
Total Organic (mg/l)				
Carbon (mg/l)				
COD (mg/l)				
pH				

APPENDIX III

1. +Aer-O-Flo Corporation
   P.O. Box 223
   Florence, Kentucky 41042

2. American Bowser Corp
   100 N. Broadway
   Aurora, Illinois 60505

3. American Schreiber Co.
   R.D.2
   Red Lion, Pa. 17356

4. Beloit Corp., Jones Div.
   Box A
   Pittsfield, Mass. 01201

5. Brennan Chemical Co., Div.
   of Costello Manufacturing Co.
   704 N. 1st St.,
   St. Louis, Mo., 63102

6. Brink Equipment Engineering Sales
   Inorganic Chemicals Div.
   800 N. Lindbergh Blvd.,
   St. Louis, Mo. 63166

7. +Can-Tex Industries, Div of
   Harsco Corp.
   P.O. Box 340
   Mineral Wells, Texas 76067

8. +*Chicago Pump, HYDRODYNAMICS Div.
   FMC Corporation
   622 W. Diversey Parkway
   Chicago, Ill. 60614

9. +Clow Corp.
   201 N. Talman Ave
   Chicago, Ill. 60680

10. Colt Industries, Inc.
    1290 Avenue of Americas
    New York, New York 10019

11. Crane Co.
    4100 S. Kedzie Ave.,
    Chicago, Ill. 60632

12. Cromar Co., Cromarglass Div
    P.O. Box 178
    Williamsport, Pa. 17701

13. +Davco Mfg. Co.
    1828 Metcalf Ave.
    Thomasville, Ga. 31792

14. Deady Chemical
    3155 Fiberglas Rd.
    Kansas City, Kan. 66115

15. +Defiance Company
    Division of Daveo Industries
    P.O. Drawer 186
    Tallevast, Florida 33588

16. De Laval Separator Co.
    350 Dutchess Tpke
    Pough Keepsie, New York 12602

17. Dravo Corp
    One Oliver Plaza
    Pittsburg, Pa. 15219

18. *Dorr-Oliver, Inc.
    77 Havemeyer Lane
    Stamford, Conn., 06904

19. *Eimco Corporation
    P.O. Box 300
    Salt Lake City, Utah 84110

20. E.I. duPont DeNemours & Co.,Inc.
    1007 Market St.,
    Wilmington, Del. 19898

21. Eldib Engineering & Research Inc.
    170 Blanchard St.,
    Newark, N.J. 07105

22. Elgin Softner, Inc.
    440 So. McLean Blvd.
    Elgin, Illinois 60120

23. FMC Corp., Link-Belt
    Prudential Plaza, Dept.69-PCD
    Chicago, Ill. 60601

24. Fuller Co.
    124 Bridge St.,
    Catasauqua, Pa. 18032

25. General Filter Co.
Arrasmith Trail
P.O. Box 350
Ames, Iowa 50010

26. Glenfield & Kennedy, Inc.
P.O. Box 191
King of Prussia, Pa. 19406

27. Hays Process
Box 768
Waco, Texas 76703

28. Hills-McCanna Co.
400 Maple Ave
Carpentersville, Ill. 60110

29. Kisco Boiler & Engineering Co.
P.O. Box 328
St. Louis, Mo. 63116

30. Koch Engineering Co., Inc.
Pollution Control Div.,
342 Madison Ave.,
New York, N. Y. 10017

31. Komline-Sanderson Engry Corp
Peapack, N. J. 07977

32. *Lakeside Engineering Corp
222 W. Adams St.,
Chicago, Ill. 60606

33. Litton Systems, Inc., Applied Sciences Div.,
2003 E. Hennepin Ave.
Minneapolis, Minn., 55413

34. +Lyco Systems, Inc.
P.O. Box 569
Williamsport, Pa. 17701

35. +Mack Vault Company
P.O. Box 335
Valley City, Ohio 44280

36. +Marolf Hygienci Equipment, Inc.
7337 Slyvania Ave.
Toledo, Ohio 43623

37. National Tank Co., Div of Combustion Engineering, Inc.
P.O. Box 1710
Tulsa, Okla. 74101

38. Neptune Micro Floc, Inc.
P.O. Box 612
Corvallis, Ore. 97330

39. Pacific Flush Tank Co.
4241 Ravenswood Ave.
Chicago, Ill. 60613

40. +Pall Corporation
30 Seacliff Ave.
Glen Cove, L.I. New York 11542

41. Pickands, Mather & Co., Prenco Div.
2000 Union Commerce Bldg.
Cleveland, Ohio 44115

42. Piqua Machine & Mafg., Co.
420 E. Third St.,
Piqua, Ohio 45356

43. +Pollution Control Inc.
Suite 21
Lunken Airport Administration Bldg.
Cincinnati, Ohio 45226

44. Resources Control, Inc.
Frontage Rd
West Haven, Conn. 06516

45. Rex Chainbelt, Inc.
P.O. Box 2022
Milwaukee, Wis. 53201

47. +Smith & Loveless, Div. of Union Tank Car Co.
96th and Old S. Hwy.
Lenepa, Kans. 66215

46. *Schmieg Div
Sydner Hydordynamics Inc.
1305 Brook Rd.
Richmond Va. 23212

48. Surburbia Systems, Inc.,
Box 6217
Leawood, Kansas 66206

49. Tailor & Co., Inc.
2403 State St.,
Bettendorf, Iowa 52722

50. Texas Engineering Corp
P.O. Box 13161
Houston, Tex. 77019

51. Vulcan Laboratories, Inc.
408 Auburn Ave.
Pontiac, Michigan 48058

52. Walker Process Equip. Inc.
Div of Chicago Bridge & Tran. Co.
Box 266
Aurora, Illinois 60507

53. Waste Water Treatment Corp.
415 Lexington Ave.
New York, New York 10017

54. +Water Pollution Control Corp.
P.O. Box 744
Milwaukee, Wisconsin 53201

55. Welles Products Corp
1600 N. 2nd St.,
Roscoe, Ill. 61073

56. Western Water Equipment Co.
925 Tanklage Rd.
San Carlos, Calif. 94070

57. Yeomans Brothers Co.
1999 N. Ruby St.,
Melrose Park, Ill. 60160

58. Zurn Industries Inc., (Pollution Control Group)
1801 Pittsburgh Ave.
Erie, Pa. 16512

+ National Sanitation Foundation

* Answered WLDC "Product Questionnaire

REFERENCES

1. Goodman, Brian L., "Package Plants - Past, Present and Future," Civil Engineering, American Society of Civil Engineers, February 1969.

2. Goodman, Brian L., Package Plant Criteria Development Part I: Extended Aeration, Federal Water Pollution Control Administration Demonstration Grant, Project WPD-74, National Sanitation Foundation, Ann Arbor, Michigan, September 1966.

3. Dempster, Andrew T., Certificate of Performance for an Extended Aeration Package Sewage Treatment Plant, National Sanitation Foundation, Ann Arbor, Michigan, 1 November 1967.

4. Baker, Ralph H. Jr., "Package Aeration Plants In Florida," Journal of the Sanitary Engineering Division, Proceedings of the American Society of Civil Engineers, Vol. 88, No. SA6, November 1962, pp 75-95.

5. Berk, William L., Theory, Operation and Cost of the Oxidation Ditch Process, Lakeside Engineering Corporation, Chicago, Illinois.

6. Dempster, Andrew T., Package Sewage Treatment Plant Criteria Development Part II: Contact Stabilization, Federal Water Pollution Control Administration Demonstration Grant, Project WPD-74, National Sanitation Foundation, Ann Arbor, Michigan, June 1968.

7. E.A. Aerotor Plant, Lakeside Engineering Corporation, Chicago, Illinois.

8. Joost, Robert H., Systemation in Using the Rotating Biological Surface (RBS) Waste Treatment Process, Paper presented at The 24th Annual Purdue Industrial Waste Conference, Purdue University, Lafayette, Indiana, 6-8 May 1969.

UNCLASSIFIED
Security Classification

DOCUMENT CONTROL DATA - R & D

(Security classification of title, body of abstract and indexing annotation must be entered when the overall report is classified)

1. ORIGINATING ACTIVITY *(Corporate author)*

Air Force Weapons Laboratory (WLDC)
Kirtland Air Force Base, New Mexico 87117

2a. REPORT SECURITY CLASSIFICATION

UNCLASSIFIED

2b. GROUP

3. REPORT TITLE

SUMMARY OF COMMERCIAL WASTE WATER TREATMENT PLANTS

4. DESCRIPTIVE NOTES *(Type of report and inclusive dates)*

1 January 1969-15 August 1969

5. AUTHOR(S) *(First name, middle initial, last name)*

James A. Mahoney

6. REPORT DATE	7a. TOTAL NO. OF PAGES	7b. NO. OF REFS
September 1969	66	8

8a. CONTRACT OR GRANT NO.

b. PROJECT NO.

c. Subtask No. 3.1.001

d.

9a. ORIGINATOR'S REPORT NUMBER(S)

AFWL-TR-69-121

9b. OTHER REPORT NO(S) *(Any other numbers that may be assigned this report)*

10. DISTRIBUTION STATEMENT This document is subject to special export controls and each transmittal to foreign governments or foreign nationals may be made only with prior approval of AFWL (WLDC), Kirtland AFB, NM, 87117. Distribution is limited because of the technology discussed in the report.

11. SUPPLEMENTARY NOTES

12. SPONSORING MILITARY ACTIVITY

AFWL (WLDC)
Kirtland AFB, NM 87117

13. ABSTRACT

(DISTRIBUTION LIMITATION STATEMENT NO. 2)

The purpose of the report is to catalog and review capabilities of commercially available packaged waste water treatment plants for possible Air Force application in limited war and fixed base installations. Definitions of the various methods of treatment are included. Simple curves are furnished for a quick estimate of costs, power requirements, erection time, shipping volume and weight in relation to flow capacity. Included are tables which relate the performances of a number of plants tested by the National Sanitation Foundation, by the manufacturer, and by the Florida State Board of Health. A list of firms which manufacture packaged waste water treatment plants is included in an appendix.

DD FORM 1473

UNCLASSIFIED
Security Classification

UNCLASSIFIED
Security Classification

14. KEY WORDS	LINK A ROLE	LINK A WT	LINK B ROLE	LINK B WT	LINK C ROLE	LINK C WT
Extended aeration						
Contact stabilization						
Oxidation ditch						
Waste water treatment						
Environics						

UNCLASSIFIED
Security Classification