UNCLASSIFIED

AD NUMBER

AD859285

NEW LIMITATION CHANGE

TO

Approved for public release, distribution unlimited

FROM

Distribution authorized to U.S. Gov't. agencies and their contractors; Administrative/Operational Use; APR 1969. Other requests shall be referred to Naval Air Systems Command, Washington, DC.

AUTHORITY

USNASC ltr, 26 Oct 1971

THIS PAGE IS UNCLASSIFIED

Report No. MSD-P69-144

Contract No. 00019-68-C-0274

AD 859285

COLLOCATION FLUTTER ANALYSIS

This document is subject to special export controls and transmittal to foreign governments or foreign nationals may be made only with prior approval of the Naval Air Systems Command (AIR-6022).

VOLUME I.

GENERAL PROGRAM DESCRIPTION

APRIL 1969

SEP 25 1969

MISSILE SYSTEMS DIVISION

HUGHES

HUGHES AIRCRAFT COMPANY

COFA

COLLOCATION FLUTTER ANALYSIS STUDY

VOLUME I

THE COFA PROGRAM

Prepared by the Dynamics and Environment
Section Personnel, Hughes Aircraft Company
Under Contract Number 0019-68-C-0247

APRIL 1969

This document is subject to special export controls and transmittal to foreign governments or foreign nationals may be made only with prior approval of the Naval Air Systems Command [redacted]

ABSTRACT

This study covers the development of a set of computer programs to perform flutter analysis by the collocation method. While this method has been known for some time, only recently have advances in computer technology made the method technically and economically feasible. The ingredients of a collocation flutter analysis are (1) a flexibility matrix, (2) aerodynamic influence coefficient matrix, and (3) an eigenvalue solution. This study is presented in four volumes. Volume I contains a general program discussion. Volume II contains the program FLUEMC which calculates the flexibility matrix. Volume III contains a set of three programs to calculate aerodynamic influence coefficients for subsonic, transonic, and supersonic flight regimes. Volume IV contains the program COFA which sets up and solves the flutter eigenvalue matrix.

FOREWORD

This report covers the research conducted by the Missile Systems Division of Hughes Aircraft Company, Canoga Park, California, under Contract Number 00019-68-C-0247.

This work was performed to develop a comprehensive set of computer programs that perform flutter analysis using the collocation method. A set of three computer programs to calculate unsteady aerodynamic influence coefficients for subsonic, transonic, and supersonic lifting surfaces with interaction between the wing and a downstream control surface lying in the wake of the wing are presented. A program to calculate structural influence coefficients is presented, and a program to set up and solve the flutter eigen matrix is presented.

The Program Manager for Hughes Aircraft Company was R. J. Oedy. Dr. V. Weingarten assisted in the development of the structural analysis program, and Dr. W. P. Rodden assisted in the development of the aerodynamic programs and flutter analysis programs.

TABLE OF CONTENTS

SECTION		PAGE
	TABLE OF CONTENTS	ii
	ABSTRACT	iii
I	INTRODUCTION	1
II	GENERAL DISCUSSION OF FLUTTER	2
	A. THE MECHANISM OF FLUTTER	2
	B. THE INGREDIENTS OF FLUTTER ANALYSIS	2
III	DISCUSSION OF THE COFA PROGRAM	3
	A. THE FLUTTER ANALYSIS	3
	1. THE TECHNICAL APPROACH	3
	2. PROGRAM CAPABILITIES	5
	B. THE CALCULATION OF STRUCTURAL INFLUENCE COEFFICIENTS	6
	1. THE TECHNICAL APPROACH	7
	2. PROGRAM CAPABILITIES	8
	C. THE UNSTEADY AERODYNAMIC LIFTING SURFACE THEORIES	9
	1. THE SUBSONIC KERNEL FUNCTION PROCEDURE	9
	a) THE TECHNICAL APPROACH	9
	b) PROGRAM CPABILITIES	11
	2. THE TRANSONIC BOX METHOD	12
	a) THE TECHNICAL APPROACH	12
	b) PROGRAM CAPABILITIES	13
	3. THE SUPERSONIC BOX METHOD	14
	a) THE TECHNICAL APPROACH	14
	b) PROGRAM CAPABILITIES	15
IV	SAMPLE PROBLEM	16
V	REFERENCES	67

PART I - INTRODUCTION

Collocation is a term used to describe a mathematical procedure for (among other things) solving integral equations. The word literally means to co-locate, i.e., an approximate solution is co-located to satisfy the equation at a specified discrete number of locations in the space (the collocation points). When the integral equation for vibration analysis is solved by the collocation method it is generally referred to as the lumped-parameter method since the properties of the continuum are assumed to be concentrated ("lumped") at the collocation points. The collocation method leads to a formulation of the flutter problem similar to that of the vibration problem where, in addition to the structural influence coefficients (SIC's) and mass matrix, aerodynamic influence coefficients (AIC's) are required.

The vibration problem can be large if many degrees of freedom are necessary to model the vibrating system, and the calculation of the modes and frequencies requires solving a large eigenvalue problem. However, since both the SIC's and mass matrix are real symmetric matrices, special techniques can be utilized to find the modes and frequencies rapidly (and, hence, economically). The corresponding formulation of the flutter problem does not possess any special properties that permit convenient determination of the modes, frequencies, and flutter velocities. For this reason a series or modal solution has traditionally been employed to reduce the size of the flutter problem and the corresponding computing time.

Present day computer capacities and speeds, and advances in eigenvalue methods however, no longer limit flutter analysis to modal methods and the advantages of a direct solution can be realized. One advantage is that questions of convergence of the modal solution are avoided. Another advantage is that the flexibility, mass and aerodynamic data are kept separate so that a change in any one set can be made independently of the other two. Finally, the flutter analysis can be done without performing a vibration analysis. This is a particular advantage when variations in mass or stiffness distribution must be investigated. Examples include control surface mass balance optimization studies or weight reduction due to burning fuel.

PART II - GENERAL DISCUSSION OF FLUTTER

A. The Mechanism of Flutter

Flutter is a self-excited vibration of a flexible body in a fluid stream. The flutter speed is defined as the minimum speed at which the aeroelastic system will sustain a neutrally stable oscillation. At lower speeds the motion will be damped, and at higher speeds, or at least in a range of higher speeds, the motion will be divergent. Usually only a small increase beyond the flutter speed is required to produce a rapid divergence of such violence that a complete structural failure results in only a few cycles of motion.

At the flutter speed, a critcial phasing between the motion and the loading permits extraction of an amount of energy from the air stream equal to that dissipated by internal damping during each cycle and thereby sustains a neutrally stable periodic motion. The simplest type of flutter occurs when a simple motion induces an aerodynamic force having a component in the direction of the motion and in phase with the velocity. This is described as a case of negative aerodynamic damping or single degree of freedom flutter. The term classical flutter is used to denote the more complicated instability that typically arises from a critical coupling of two or more modes of motion, each of which is usually stable by itself. It is the classical flutter mechanism with which we are primarily concerned because its generality includes the single degree of freedom instability as a special case.

B. The Ingredients for Flutter Analysis

Since flutter is a dynamic aerolastic instability the forces involved are structural, aerodynamic, and inertial. In the present lumped-parameter or collocation formulation these appear as matrices of structural influence coefficients (SIC's), aerodynamic influence coefficients (AIC's), and masses. The combination of the various matrices to formulate the flutter stability problem leads to a non-Hermitian eigenvalue problem. Since this is the most general type of eigenvalue problem, methods for its solution are quite limited. The method that has been employed is the power method, or as it is sometimes called, the matrix iteration method.

PART III - DISCUSSION OF COFA PROGRAM

A. The Flutter Analysis

1. The Technical Approach -

The collocation method of flutter analysis had been known for many years but it was not demonstrated to be computationally feasible until 1956 in Reference 1. The method was extended to include an arbitrary number of rigid body degrees of freedom in Reference 2. A complete discussion of the general flutter analysis is given in the Flutter Analysis Report. It is sufficient for the introductory purposes of this report to consider the formulation of the flutter problem for a restrained vehicle.

The basic equation is the relationship between the deflections $\{h\}$ to the forces $\{F\}$ through the structural influence coefficients (SIC's) $[a]$.

$$\{h\} = [a] \{F\} \tag{3.1}$$

The force matrix must include both the inertial and aerodynamic forces.

$$\{F\} = -[M] \{\ddot{h}\} + \{F_a\} \tag{3.2}$$

where $[M]$ is the mass matrix corresponding to the chosen set of control points. We define a complex matrix of oscillatory aerodynamic influence coefficients (AIC's), $[C_h]$, by the equation

$$\{F_a\} = \rho\omega^2 b_r^2 s \, [C_h] \{h\} \tag{3.3}$$

where ρ is the density, ω is the frequency, b_r is the reference semi-chord, and s is the reference semi-span. Combining Eqs. (3.2) and (3.3) for harmonic motion, we find the total force to be

$$\{F\} = \omega^2 \left([M] + \rho b_r^2 s \, [C_h] \right) \{h\} \tag{3.4}$$

If we substitute Eq. (3.4) into Eq. (3.1) and divide the static SIC's by $(1 + ig)$ where g is the <u>artificial</u> structural damping necessary to sustain the assumed harmonic motion, we obtain the matrix equation for flutter

$$\left\{h\right\} = \frac{\omega^2}{1 + ig} \left[a\right] \left(\left[M\right] + \rho b_r^2 s \left[C_h\right]\right) \left\{h\right\} \tag{3.5}$$

Eq. (3.5) can be solved for the complex mode shape, $\left\{h\right\}$, and the complex eigenvalue, $(1 + ig)/\omega^2$, by complex matrix iteration (the power method). From the eigenvalue

$$\lambda = \lambda_R + i\lambda_I \tag{3.6a}$$

$$= (1 + ig)/\omega^2 \tag{3.6b}$$

we obtain the flutter frequency

$$\omega = 1/\sqrt{\lambda_R} \tag{3.7}$$

the required artificial damping

$$g = \lambda_I / \lambda_R \tag{3.8}$$

and, since the AIC's required the assumption of a reference reduced frequency, $k_r = \omega b_r/U$, for its calculation, we find the velocity

$$U = \omega b_r / k_r \tag{3.9}$$

From a series of solutions for different reduced frequencies, a required damping velocity curve can be constructed for a specific altitude. The flutter velocity corresponds to the lowest velocity at which the required damping is equal to the actual structural damping of the system.

2. Program Capabilities

The COFA program has the limitations of analyzing a system with a maximum of 49 collocation stations. In the use of these 49 stations, there is a great deal of flexibility. Entire vehicles may be analyzed as single entities or as conglomerates of components with single or tanden aerodynamic surfaces. Both may be analyzed. When the components are used to synthesize a structure, the attachment between the components must be statically determinant. The components may be either flexible or rigid. The coupling of flexible components is demonstrated in the example problem of this volume. The coupling of flexible to rigid components is demonstrated in the example problems of Volume IV. The systems analyzed may be cantilevered or free in space. Up to six rigid body modes may be used in the analysis of systems free in space. In addition, there is the capability of using a free-free boundary condition built into the program for freeing cantilevered or fixed systems.

There are two classes of tandem surface problems; they are aerodynamically non-interfering surfaces and aerodynamically interfering surfaces. For non-interfering surfaces the structural system may be analyzed as a single entity or a conglomerate of components. The most usual way is to use the component synthesis technique. When the component technique is used, the AIC, SIC, and mass matrices are partitioned with a partition corresponding to each structural component. This results in dealing with smaller order matrices, and the analysis is straightforward as presented in Volume IV. The only precaution is that the mass, flexibility, and aerodynamic matrix partitions be entered serially into the computer program in an identical manner, so that the information is properly located in the overall dynamical matrix, i.e. fuselage first; forward surface second; and aft surface third; etc. For interfering surfaces, the analysis must be conducted as a single structural entity; for interfering surfaces the following procedure must be followed:

a. When calculating the structural influence coefficients the fuselage characteristics must be entered first, followed by the forward surface then the aft surface. This results in a flexibility matrix of the following form

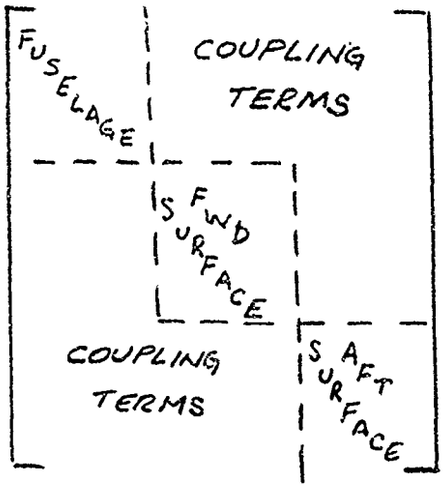

b. The COFA aerodynamic programs do not calculate aerodynamic forces for the fuselage; thus, in order to enter the aerodynamics properly into the program, the aerodynamic matrix must be banded by zeros as follows

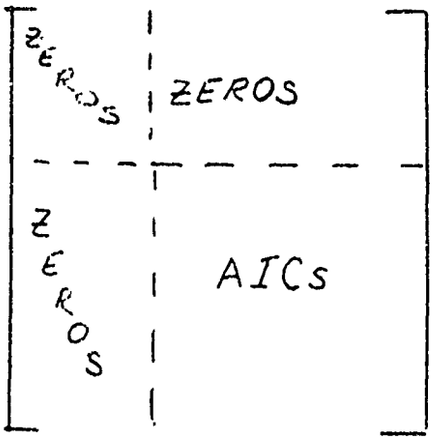

If fuselage aerodynamics are obtained from a different source, they may be properly entered into the analysis in the upper left partition. The off diagonal partitions are for wing-fuselage interference effects. The details of using the COFA Program may be found in Volume IV.

B. The Calculation of Structural Influence Coefficients

1. The Technical Approach -

There are many methods by which structural influence coefficients may be calculated. The SIC's calculated for this program use the direct stiffness method. The direct stiffness method was chosen as it is readily adapted to highly redundant structures and is especially suited to the use of high speed digital computers. The structure is regarded as an assemblage of beams and plates. The stiffness matrix for the entire structure is computed by the simple summation of the stiffness matrices of the elements of the structure. Finally, the matrix of SIC's is obtained by the inversion of the stiffness matrix.

For a given idealized structure, the analysis of stresses and deflections due to a given system of loads is a purely mathematical problem. Two conditions must be satisfied in the analysis: 1) the forces developed in the members must be in equilibrium and, 2) the deformation of the members must be compatible - i.e., consistent with each other and the boundary conditions. In addition, the forces and deflections in each member must be related in accordance with the stress-strain relationship assumed for the material. These conditions are satisfied by the direct stiffness method in the following way. The displacements of the joints of the structure are considered as unknown quantities. Thus, an infinite number of systems of mutually compatible deformations in the members are possible; the correct pattern of displacements is the one for which the equations of equilibrium are satisfied. The concept of static determinateness or indeterminateness is irrelevant when the analysis is considered from this viewpoint. This approach is the basis for many relaxation type analysis (such as moment distribution) and is used extensively in the analysis of complex aircraft structures.

2. Program Capabilities -

The program FLUENC calculates structural influence coefficients for systems with up to 50 mass points. The mass points may be connected by any combination of beams or plates. Each member may have its own material property. The program also calculates the natural frequencies and mode shapes of the structure. The program can calculate the modes and frequencies for structures fixed or free in space. Caution should be exercised not to use the flexibility matrix of structures free in space as the flexibility matrix of such a structure cannot be directly calculated. The flexibility matrix of a free structure can be obtained by 1) arbitrarily fixing the structure, 2) calculating the flexibility matrix for the fixed structure, 3) enter the flexibility matrix of the fixed structure into the COFA program and use the free-free boundary condition to obtain the flexibility matrix of the free-free structure. The details of using the program FLUENC may be found in Volume II.

C. The Unsteady Aerodynamic Lifting Surface Theories

1. The Subsonic Kernel Function Procedure

a) The Technical Approach -

The linearized equation for the perturbation potential ϕ for a body immersed in a compressible, inviscid, perfect gas, when we assume the flow to be isentropic and irrotational, is

$$(1 - M^2) \frac{\partial^2 \phi}{\partial x^2} + \frac{\partial^2 \phi}{\partial y^2} + \frac{\partial^2 \phi}{\partial z^2} = \frac{1}{a_o^2} \frac{\partial^2 \phi}{\partial t^2} + \frac{2M}{a_o} \frac{\partial^2 \phi}{\partial x \, \partial t} \tag{3.10}$$

in which M is the Mach number, a_o is the ambient speed of sound, and x,y, z are the Cartesian coordinates of the flow field. The linearized perturbation pressure coefficient is related to the potential through

$$C_p = - \frac{2}{U^2} \left(\frac{U \, \partial \phi}{\partial x} + \frac{\partial \phi}{\partial t} \right) \tag{3.11}$$

where V is the free-stream velocity. The problem in lifting surface theory is to find the difference in the pressure coefficients between the upper and lower surfaces, i.e., the lifting pressure coefficient. The evaluation of Eq.(3.11) requires the solution of Eq. (3.10). The differential equation (3.10) must be solved subject to certain boundary conditions. There can be no flow through the surface, i.e., at the surface the normal velocity of the fluid must equal the normal velocity of the surface (the downwash velocity). Additional conditions at subsonic speeds require that the pressure must remain finite at the trailing edge (the Kutta condition) and the potential must vanish at an infinite distance from the surface. The additional conditions at supersonic speeds are that no disturbance can propagate upstream of the leading edge, and that the disturbances must propagate from the surface as outgoing waves. At transonic speeds a combination of the subsonic and supersonic boundary conditions are required.

The foregoing general review of lifting surface theory leads us to consider specific Mach number regimes. The first numerical method for solving the subsonic pressure distribution for planar lifting surfaces undergoing simple harmonic motion was developed by Watkins, Woolston, and Cunningham (Reference 3). The approach taken was to recast the differential equation for the velocity potential into an integral equation relating the surface downwash to the lifting pressure coefficient (the acceleration potential). The solution was carried out by assuming a series form for the pressure coefficient based on known exact solutions, e.g., the two-dimensional solution for chordwise pressure, and the elliptical spanwise loading on an elliptical wing. From this series of pressure modes the problem reduced to solving for the amplitude of each pressure mode. A collocation method was used in which the downwash was matched at a discrete number of points. The numerical difficulties are numerous since the integral equation is singular and the many integrals of the pressure modes require extreme accuracy. Since the publication of Reference 3, many investigators have refined the procedures, notably Hsu (Reference 4), Vivian and Andrew (Reference 5), and Rowe (Reference 6). The present study is an extension of References 7 and 8 to obtain AIC's, thereby eliminating the limitations introduced by the requirements for polynomial surface fitting in References 7 and 8. The details of the AIC's and the numerical problems of the subsonic lifting surface theory are discussed in the Unsteady Aerodynamics Report, Part III and Part IV, Section A, respectively.

b) Program Capabilities -

The Subsonic AIC program calculates AIC's for systems with up to 40 collocation stations. The systems analyzed may be a single surface or tandem surfaces. Up to 20 collocation stations per surface may be used. When analyzing single surfaces, a dummy trailing surface must be input and isolated from the leading surface. The following single surface planforms may be analyzed: rectangle, trapezoidal, delta, cropped delta and cropped trapezoid. The trailing edge of the surface must be straight and normal to the direction aerodynamic flow. When analyzing tandem surfaces, the forward surface may be anyone of the single surfaces previously defined; the aft surface must be a rectangular surface with the spanwise dimension equal to the spanwise dimension of the wing.

The program automatically sets the number of chordwise and spanwise pressure series terms equal to the number of chordwise and spanwise collocation station. This maximizes the number of pressure series terms used and increases computation accuracy. For best accuracy a minimum of three chordwise collocation stations should be used. The number of kernel function chordwise integration stations is a variable in the program, and is a function of the number of chordwise collocation stations. (The number of integration stations equals factor times the number of chordwise collocation stations.) The factor, NIØNCX, which is input data, should be such that the minimum number of integration stations is 15. The maximum number of integration stations per surface is 40.

When analyzing single surfaces, the dummy surface is required to have two chordwise collocation stations. The number of spanwise collocation stations on the dummy surface is established internally in the program and is set equal to the number of spanwise collocation stations used in the analysis of the single surface. The details of using the Subsonic AIC program may be found in Volume III.

2. The Transonic Box Method

a) The Technical Approach -

The basic development of the transonic box method was made by Rodemich and Andrew (Reference 9). References 7 and 8 include extensions of Reference 9 to interfering wing-tail configurations. The basic formulation of the transonic potential equation, pressure coefficient, and boundary conditions has been included in the introductory discussion of the technical approach to the subsonic problem above in Section A, and the details of the AIC's and the numerical problems of the transonic box method are discussed in the Unsteady Aerodynamics Report, Part III, and Part V, Section A, respectively. For the purposes of this introductory summary it is sufficient to outline the basic procedure.

The transonic box method is designed to calculate the unsteady potentials from which the pressure distributions may be obtained for arbitrary modes of surface motion. The method used was suggested by the successes of the supersonic box methods (References 10 and 11). The potential is generated by a doublet distribution rather than by a source distribution because the latter method would involve diaphragm regions of infinite extent, whereas the doublet distribution is confined to the wing and its wake. As with the subsonic problem, the differential equation is rewritten as an integral equation. The integral equation is approximated numerically by a matrix equation so that the basic step in the box method is the solution of the system of simultaneous equations which determine a set of values of potential on the surface from a corresponding array of upwash values. The solution procedure obtains the velocity potential over the surface one spanwise row of boxes at a time until the trailing edge row is completed. The numerical complexity is not increased, however, by a large number of box rows over the configuration because the influence coming from more than 15 rows away has been found to be negligible. The results are valid for high reduced frequency k, such that $k \gg |M - 1|$ where M is the Mach number.

b) Program Capabilities -

The Transonic AIC program calculates AIC's for systems with up to 40 collocation stations. The systems analyzed may be a single surface or tandem surfaces. Up to 20 collocation stations per surface may be used. The following single surface planforms may be analyzed: rectangular, trapezoidal, delta, cropped delta, and cropped trapezoid. It is not necessary to enter a second surface into the program when analyzing a single surface. The trailing edge of the surface must be straight and normal to the aerodynamic flow direction. When analyzing tandem surfaces, the forward surface may be any one of the single surfaces previously defined; the aft surface must be a rectangular surface with the spanwise dimension equal to the spanwise dimension of the wing.

The maximum allowable number of Mach boxes is 45. The layout of the boxes on the surface is determined in the program, and is a function of the number of chordwise boxes. The Mach boxes are square, and can be located on the surface by placing the center of one box at the intersection of the root chord and the trailing edge of the forward surface. The length of the side of a Mach box is approximately equal to the root chord length divided by the number of chordwise boxes choosen. It is not necessary to layout the Mach boxes, as this is done by the program, but this knowledge is helpful in choosing the optimum number of chordwise Mach boxes. In general, the accuracy increases as the number of Mach boxes increase. Therefore, the maximum number of Mach boxes should be used. The details of the Transonic AIC program may be found in Volume III.

3. The Supersonic Box Method

a) The Technical Approach -

The basic work on the supersonic box method was done by Pines, Dugundji, and Neuringer (Reference 10) and by Zartarian and Hsu (Reference 11). Further refinements were made by Moore and Andrew (Reference 12). References 7 and 8 also include extensions of Reference 12 to interfering wing-tail configurations. The fundamentals of the potential equation have been presented above in the introductory discussion of the technical approach to the subsonic problem in Section A, and the details of the AIC's and the numerical problems of the supersonic box method are discussed in the Unsteady Aerodynamics Report, Part III and Part VI, Section A, respectively. We merely outline the basic procedure in this introductory summary.

Pines, et al, (Reference 10) published the first source superposition method to approximate successfully the aerodynmaic forces on an oscillating thin planar surface in supersonic flow. They employed Evvard's diaphragm concept (Reference 13) to handle subsonic leading edges and overlaid the surface and diaphragm with a grid of square boxes. For purposes of calculating pressures, they assumed that the source strength over the area of each box is a constant value which satisfies the condition of tangential flow at the center of the box. The Mach-box procedure is basically the same as the method of Pines et al, differing only in that the surface and diaphragm is overlaid with a grid of rectangular boxes, the diagonals of which are parallel to Mach lines. As in the Subsonic and Transonic cases the potential equation is written as an integral equation, this time relating the downwash to the source strengths, and approximated by a matrix equation. The numerical difficulties are primary ones of computer logic since the zones of influence of a given Mach box is limited to the region within the aft Mach lines. The matrix formulation leads to a partitioned form since there are two boundary conditions to be matched. The first boundary condition is the downwash on the surface, and the second is that there be no pressure difference off of the surface in the diaphragm regions. The zero pressure conditions leads to a relationship between the diaphragm potentials and the surface potentials, and the surface downwash condition then leads to the surface potentials. The surface pressures then follow from the surface potentials.

b) Program Capabilities -

The Supersonic AIC program calculates AIC's for systems with up to 40 collocation stations. The systems analyzed may be a single surface or tandem surfaces. Up to 20 collocation stations per surface may be used. The following single surface planforms may be analyzed: rectangular, trapezoidal, delta, cropped delta, and cropped trapezoid. It is not necessary to enter a second surface into the program when analyzing a single surface. The trailing edge of the surface must be straight and normal to the direction of flow. When analyzing tandem surfaces, the forward surface may be any one of the single surfaces previously defined; the aft surface must be a rectangular surface with the spanwise dimension equal to the spanwise dimension of the wing.

The maximum allowable number of Mach boxes is 45. The layout of the boxes on the surface is determined in the program, and is a function of the number of chordwise boxes and the Mach number. The Mach boxes are rectangular with a length in the chordwise direction equal to approximately the root chord divided by the number of chordwise Mach boxes, and a length in the spanwise direction equal to the length in the chordwise direction divided by the square root of the Mach number squared minus one. The Mach boxes can be located on the surface by placing the center of one box at the intersection of the root chord and the trailing edge of the wing. It is not necessary to layout the Mach boxes, as this is done by the program, but this knowledge is useful in choosing the correct number of chordwise Mach boxes. In general, the accuracy increases as the number of Mach boxes increase. Therefore, the maximum number of Mach boxes should be used. The details of the Supersonic AIC program may be found in Volume III.

PART IV - SAMPLE PROBLEM

As an example problem, a typical missile with tandem aerodynamic surfaces is used. The tandem surfaces are in close proximity such that aerodynamic interference between surfaces occurs. Thus, the structure must be modeled as one entity. The analysis will be performed for the missile free in space with two rigid body modes (pitching and plunging); thus, the free boundary condition of the COFA program will be employed.

The entire missile is flexible. For a missile free in space, two basic modes of flutter can exist. They are symmetrical and anti-symmetrical flutter; these modes of flutter are demonstrated in Figure 4.1. An analysis for symmetrical flutter is presented. Due to symmetry, only one half of the structure needs to be included in the analysis. A sketch of the missile to be analyzed is shown in Figure 4.2.

The first step in the analysis is to develop a structural idealization (mathematical model) that is consistent with the program FLUENC. The mathematical model established for this example is shown in Figure 4.3. The structure was arbitrarily fixed in translation at mass points 5 and 7, as a flexibility matrix for a structure free in space can not be directly calculated. These points will be released later using the free-free boundary condition of the COFA program. The next step is to run the program FLUENC to generate the flexibility matrix. The computer program FLUENC normally yields a reduced flexibility matrix: i.e. the rows and columns pertaining to the fixed points are eliminated. This is satisfactory when the constrained points are included in a rigid component or a fixed reference point; however, when the constrained points are part of a flexible structure or component this is not satisfactory. A full flexibility matrix is required in order that the entire inertia of the structure may be included. As a consequence, the option to punch the expanded flexibility matrix for the structure was necessary. This option inserts rows and columns of zeros in the flexibility matrix corresponding to the constrained mass points. Next a set of flight parameters were chosen and the aerodynamics program was run. For this example the subsonic AIC program was used, the flight parameters used are

Mach number = .5

Reduced Frequency = 1.0, 1.5, 2.0

Altitude = sea level

The computer output for the subsonic AIC program is shown on pages 38 through 42 . As the AIC programs only establish AIC's for the aerodynamic surfaces, the output from the computer program must be banded by the proper number of zeros, corresponding to the number of mass points on the fuselage. The flexibility matrix, the modified AIC matrix, the proper rigid body modal matrices corresponding to symmetrical flutter, and a rigid body mass matrix corresponding to the arbitrarily fixed points in the FLUENC analysis, are entered into the COFA program. The output from the COFA program is shown on pages 61 through 65 . The pertinent flutter information is shown on page 65 .

The data shown is for the specific flight parameters entered. For the output data to be valid, the flutter velocity must equal the assumed input velocity. When this occurs, the damping value yielded is the damping required at that velocity and is a point on the flutter boundary. Thus, determining a point on the stability boundary is an iterative procedure based upon varying the reduced frequency for a given set of flight parameters until the flutter velocity is approximately equal to the input velocity. In general, this occurs at a different reduced frequency for each flutter mode; thus, for one set of flight parameters, there are as many iterative analyses required as there are modes requested in the analysis. The above analysis determines one point on the flutter boundary. To determine the entire flutter boundary, the above multiple iterative procedure must be repeated for several sets of flight parameters. A typical "V-g" curve is shown in Figure 4.4 for a given altitude. Using a set of these curves, for several altitudes, a flutter boundary of the type specified in MIL-A-8870 or MIL-M-8856 may be constructed.

When solving an antisymmetrical flutter problem the technique is identical to that of the symmetrical problem with the exception of the fuselage structural data input for calculating the flexibility matrix. For the antisymmetrical case, the fuselage torsional stiffness and polar moments of inertia rather than the bending stiffnesses and translational masses are required. In addition, the fuselage mass points must be restrained in translation, allowing only rotation of the fuselage. The mass and stiffness data for the aerodynamic surfaces is identical to that for the symmetrical analysis.

As noted above, the analyses are an iterative procedure. Thus, whether an analysis is valid or not is an arbitrary decision, as the output velocity will never exactly be the input velocity. Normally when the output velocity is within five percent of the input velocity, the results are considered valid. For the example problem, an input velocity of 320 kts (Mach .5) was used. The output velocity for the second mode, using a $1/k_r$ = .660, was 308 kts (page 65). This normally would be considered a valid point on the flutter boundary for the second mode. Scanning the results on page 65 it can be seen that the valid data point for the first mode requires a $1/k_r$ value between 1.00 and .666; also for the third mode a value between .666 and .500. For modes 4, 5 and 6, the $1/k_r$ value must be greater than 2.0. It is noted that the function of flutter velocity versus $1/k_r$ is not generally linear; thus, interpolation will not necessarily yield the correct $1/k_r$ to use in subsequent iterations.

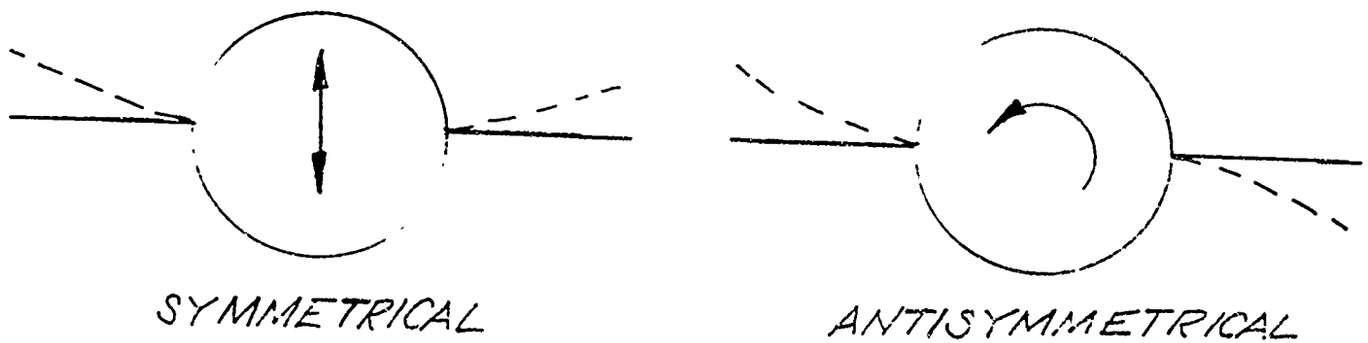

FIGURE 4.1
TYPICAL MODES OF FLUTTER

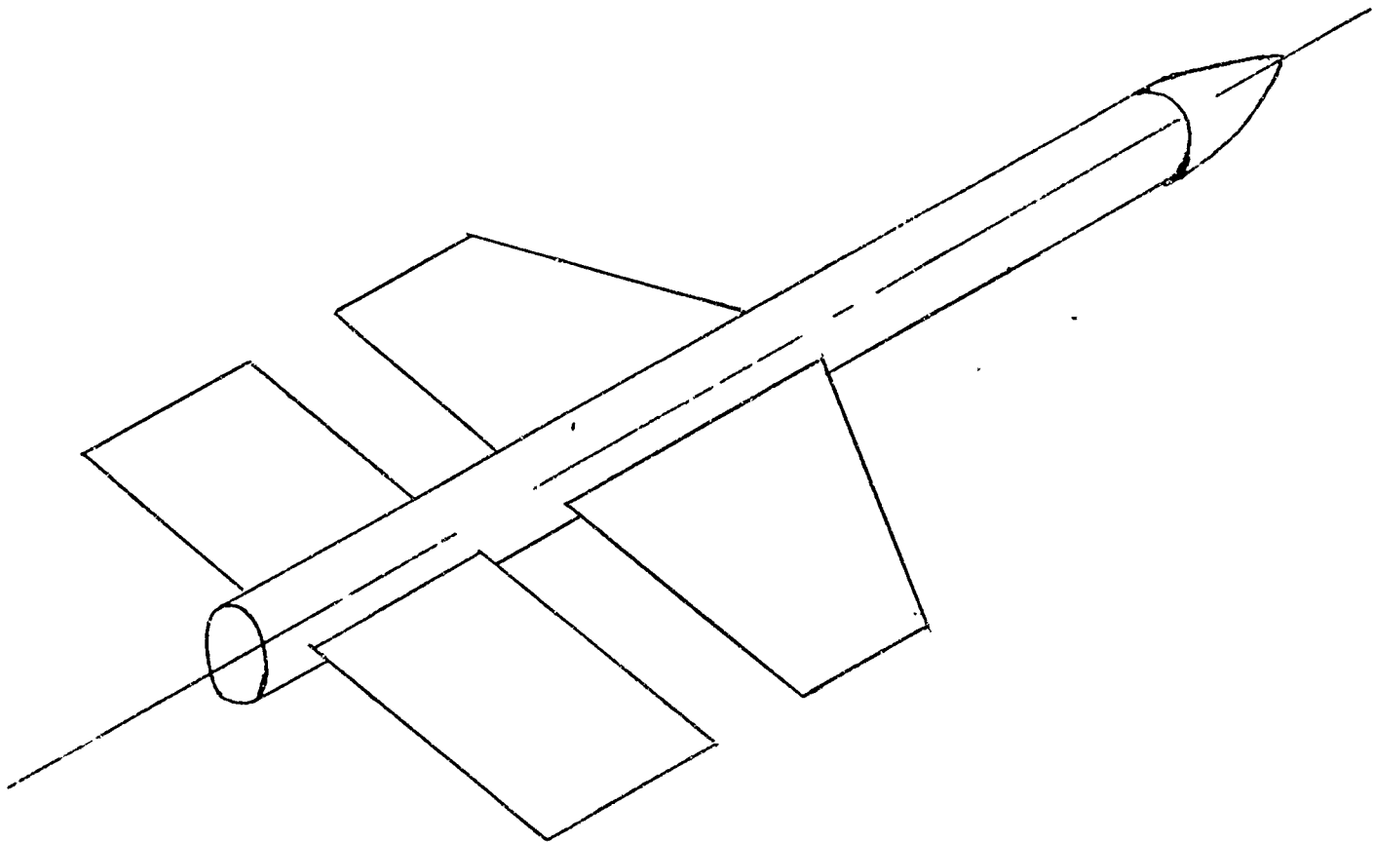

FIGURE 4.2
SAMPLE PROBLEM-TYPICAL MISSILE
FIXED WING-MOVABLE CONTROL SURFACE

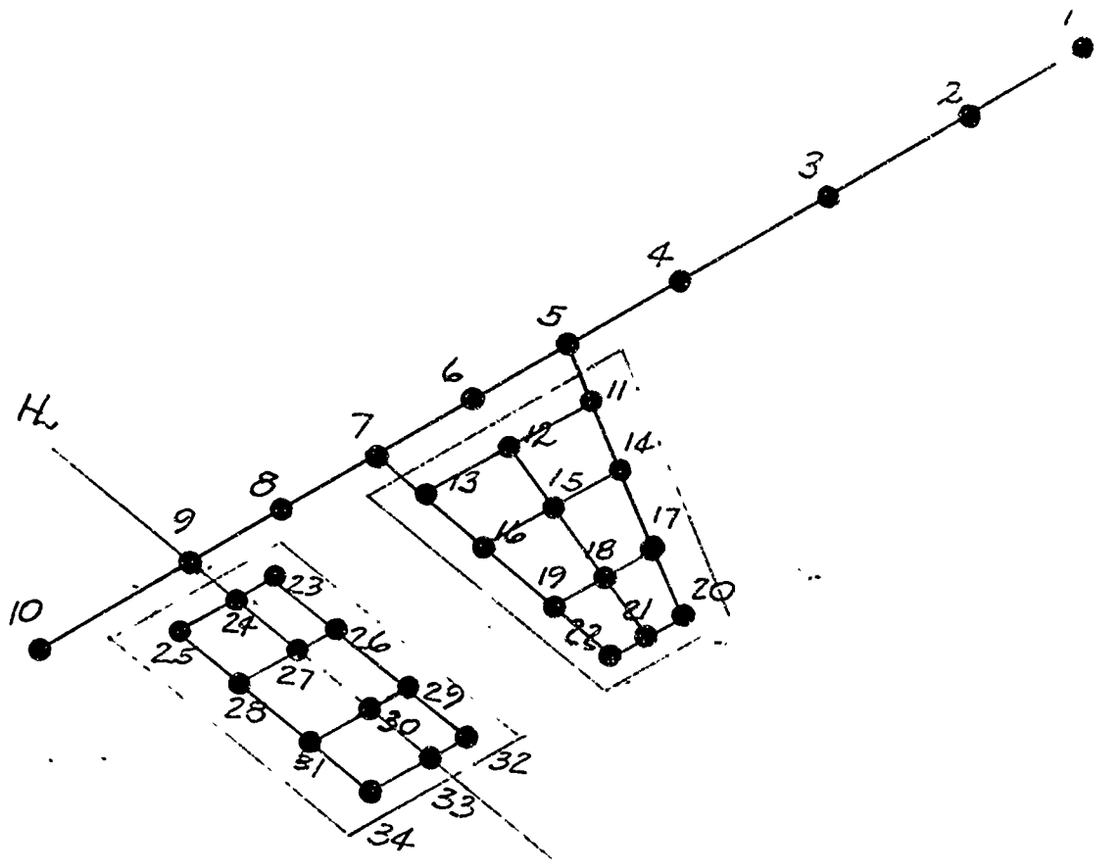

FIGURE 4.3
MATHEMATICAL MODEL

TYPICAL MISSILE WITH AERODYNAMICALLY COUPLED TANDEM SURFACES

NJTS = 34 NR = 10 NBE = 46 NPE = 0 NMODE = 5 MKEY = 1 NLUMP = 34

MATERIAL PROPERTIES

NO.	YOUNG'S MODULUS	POISSON RATIO	MODULUS OF RIGIDITY	DENSITY
1	0.10000E 08	0.30000	0.38462E 07	0.
2	0.40000E 08	0.30000	0.15385E 08	0.

JOINT COORDINATES

JOINT NO.	X COORD.	Y COORD.
1	0.	0.
2	15.00000	0.
3	25.00000	0.
4	35.00000	0.
5	45.00000	0.
6	55.00000	0.
7	65.00000	0.
8	75.00000	0.
9	85.00000	0.
10	100.00000	0.
11	46.05000	5.00000
12	55.62500	5.00000
13	65.20800	5.00000
14	48.13000	15.00000
15	56.87500	15.00000
16	65.62500	15.00000
17	50.20500	25.00000
18	58.12500	25.00000
19	66.04000	25.00000
20	52.29000	35.00000
21	59.37500	35.00000
22	66.45500	35.00000
23	81.66000	5.00000
24	85.00000	5.00000
25	91.66000	5.00000
26	81.66000	15.00000
27	85.00000	15.00000
28	91.66000	15.00000
29	81.66000	25.00000
30	85.00000	25.00000
31	91.66000	25.00000
32	81.66000	35.00000
33	85.00000	35.00000
34	91.66000	35.00000

JOINT RESTRAINT CODE

JOINT NO.	Z DISPLACEMENT	ROTATION ABOUT X	ROTATION ABOUT Y
1	0	1	0
2	0	1	0
3	0	1	0
4	0	1	0

5	1	1	0
6	0	1	0
7	1	1	0
8	0	1	0
9	0	1	0
10	0	1	0

COORINATE NUMBERS FOR EACH Z DISPLACEMENT AT EACH UNRESTRAINED JOINT

JOINT NO.	COORD. NO.
1	1
2	2
3	3
4	4
6	5
8	6
9	7
10	8
11	9
12	10
13	11
14	12
15	13
16	14
17	15
18	16
19	17
20	18
21	19
22	20
23	21
24	22
25	23
26	24
27	25
28	26
29	27
30	28
31	29
32	30
33	31
34	32

L U M P E D W E I G H T S

JOINT NO.	WEIGHT
1	25.0000
2	25.0000
3	50.0000
4	50.0000
5	50.0000
6	50.0000
7	75.0000
8	75.0000
9	75.0000
10	25.0000
11	0.3330
12	0.3330
13	0.3330

14	0.2880
15	0.2880
16	0.2880
17	0.2550
18	0.2550
19	0.2550
20	0.2220
21	0.2220
22	0.2220
23	0.0840
24	0.1250
25	0.0410
26	0.0840
27	0.1250
28	0.0410
29	0.0840
30	0.1250
31	0.0410
32	0.0840
33	0.1250
34	0.0410

B E A M E L E M E N T P R O P E R T I E S **********

ELEMENT NO.	A	I	J	MAT	JOINT 1	JOINT 2
1	1.5000	35.0000	70.0000	1	1	2
2	1.5000	35.0000	70.0000	1	2	3
3	1.5000	35.0000	70.0000	1	3	4
4	3.0000	70.0000	140.0000	1	4	5
5	3.0000	70.0000	140.0000	1	5	6
6	3.0000	70.0000	140.0000	1	6	7
7	3.0000	70.0000	140.0000	1	7	8
8	3.0000	70.0000	140.0000	1	8	9
9	1.5000	35.0000	70.0000	1	9	10
10	0.5000	0.2660	0.0266	2	5	11
11	0.5000	0.2660	0.0266	2	11	14
12	0.5000	0.2660	0.0266	2	14	17
13	0.5000	0.2660	0.0266	2	17	20
14	0.5000	0.2660	0.0266	2	12	15
15	0.5000	0.2660	0.0266	2	15	18
16	0.5000	0.2660	0.0266	2	18	21
17	0.5000	0.2660	0.0266	2	7	13
18	0.5000	0.2660	0.0266	2	13	16
19	0.5000	0.2660	0.0266	2	16	19
20	0.5000	0.2660	0.0266	2	19	22
21	0.5000	0.2660	0.0266	2	11	12
22	0.5000	0.2660	0.0266	2	12	13
23	0.5000	0.2660	0.0266	2	14	15
24	0.5000	0.2660	0.0266	2	15	16
25	0.5000	0.2660	0.0266	2	17	18
26	0.5000	0.2660	0.0266	2	18	19
27	0.5000	0.2660	0.0266	2	20	21
28	0.5000	0.2660	0.0266	2	21	22
29	0.3000	0.8000	1.6000	1	9	24
30	0.5000	0.2660	0.0266	1	23	24
31	0.5000	0.2660	0.0266	1	24	25
32	0.5000	0.2660	0.0266	1	26	27
33	0.5000	0.2660	0.0266	1	27	28
34	0.5000	0.2660	0.0266	1	29	30
35	0.5000	0.2660	0.0266	1	30	31

248933

36	0.5000	0.2660	0.0266	1	32	33
37	0.5000	0.2660	0.0266	1	33	34
38	0.5000	0.2660	0.0266	1	23	26
39	0.5000	0.2660	0.0266	1	26	29
40	0.5000	0.2660	0.0266	1	29	32
41	0.5000	0.2660	0.0266	1	24	27
42	0.5000	0.2660	0.0266	1	27	30
43	0.5000	0.2660	0.0266	1	30	33
44	0.5000	0.2660	0.0266	1	25	28
45	0.5000	0.2660	0.0266	1	28	31
46	0.5000	0.2660	0.0266	1	31	34

R E D U C E D U P P E R T R I A N G U L A R S T I F F N E S S M A T R I X

ROW 1

0.19748E 06	-0.57485E 06	0.48680E 06	-0.14534E 06	-0.12183E 05	-0.84034E 03	0.16937E 03	-0.11633E 02	-0.18876E 03
-0.34993E 01	-0.13173E 01	0.12946E 02	0.69176E-01	0.21095E 00	-0.32086E 01	-0.38742E-01	-0.52017E-01	0.53736E 00
0.25681E-02	0.94667E-02	0.45552E 00	-0.34060E 00	-0.11492E 00	0.48476E-03	-0.71414E-03	0.22938E-03	0.46933E-06
-0.51935E-05	0.47242E-05	0.64961E-08	-0.52872E-07	0.46376E-07				

ROW 2

0.22485E 07	-0.27681E 07	0.14534E 07	0.12183E 06	0.84034E 04	-0.16937E 04	0.11633E 03	0.18876E 04	0.34993E 02
0.13173E 02	-0.12946E 03	-0.69176E 00	-0.21095E 01	0.32086E 02	0.38742E 00	0.52017E 00	-0.53736E 01	-0.25688E-01
-0.94667E-01	-0.45552E 01	0.34060E 01	0.11492E 01	-0.48476E-02	0.71414E-02	-0.22938E-02	-0.46933E-05	0.51935E-04
-0.47242E-04	-0.64961E-07	0.52872E-06	-0.46376E-06					

ROW 3

0.51062E 07	-0.44405E 07	-0.54825E 06	-0.37815E 05	0.76216E 04	-0.52358E 03	-0.48942E 04	-0.15747E 03	-0.59279E 02
0.58258E 03	0.31129E 01	0.94929E 01	-0.14439E 03	-0.17434E 01	-0.23408E 01	0.24181E 02	0.11556E 00	0.42608E 00
0.20498E 02	-0.15327E 02	-0.51714E 01	0.21814E-01	-0.32136E-01	0.10322E-01	0.21128E-04	-0.23371E-03	0.21259E-03
0.29232E-06	-0.23793E-05	0.20869E-05						

ROW 4

0.68485E 07	0.26864E 07	0.18530E 06	-0.37346E 05	0.25651E 04	0.23981E 05	0.77159E 03	0.29947E 03	-0.28546E 04
-0.15253E 02	-0.46515E 02	0.70749E 03	0.85426E 01	0.11478E 02	-0.11849E 03	-0.56625E 00	-0.20874E 01	-0.18044E 03
0.75102E 02	0.25340E 02	-0.10689E 00	0.15747E 00	-0.50578E-01	-0.10349E-03	0.11452E-02	-0.10417E-02	-0.14324E-05
0.11658E-04	-0.18226E-04							

ROW 5

0.99667E 07	0.30050E 07	-0.60565E 06	0.41600E 05	-0.28438E 05	-0.19883E 04	0.79533E 04	0.34884E 04	-0.36277E 01
-0.68377E 03	-0.84443E 03	-0.65325E 01	0.17242E 03	0.14145E 03	0.27024E-01	-0.28516E 02	-0.16289E 04	0.12188E 04
0.41095E 03	-0.17335E 01	0.25537E 01	-0.82025E 00	-0.16783E-02	0.18572E-01	-0.16893E-01	-0.23229E-04	0.18987E-03
-0.16584E-03								

ROW 6

0.83323E 07	-0.42514E 07	0.58049E 06	-0.21369E 04	0.88590E 03	-0.66039E 04	0.23283E 03	0.20664E 02	0.66119E 03
-0.57983E 02	-0.39577E 01	-0.16643E 03	0.96878E 01	0.62335E 00	0.27743E 02	-0.22738E 05	0.16996E 05	0.57345E 04
-0.24189E 02	0.35635E 02	-0.11446E 02	-0.23419E-01	0.25915E 00	-0.23573E 00	-0.32415E-03	0.26383E-02	-0.23141E-02

ROW 7

0.34325E 07	-0.69944E 06	0.43068E 03	-0.17855E 03	0.13319E 04	-0.46927E 02	-0.41649E 01	-0.13324E 04	0.11686E 02
0.79767E 00	0.33543E 02	-0.19524E 01	-0.17563E 00	-0.55915E 01	0.14331E 05	-0.30976E 06	-0.42818E 04	0.12355E 04
0.38525E 05	0.62941E 03	-0.41621E 03	-0.94692E 04	-0.21211E 03	0.71286E 02	0.15756E 04	0.36128E 02	

ROW 8

0.24162E 06	-0.29582E 02	0.12264E 02	-0.91422E 02	0.32232E 01	0.28607E 00	0.91532E 01	-0.80270E 00	-0.54789E-01
-0.23039E 01	0.13410E 00	0.86294E-02	0.38406E 00	0.27209E 04	-0.20344E 04	-0.68644E 03	0.28955E 01	-0.42657E 01
0.13781E 01	0.28034E-02	-0.31022E-01	0.28218E-01	0.38802E-04	-0.31582E-03	0.27781E-03		

ROW 9

0.71902E 06	-0.40051E 05	0.19036E 05	-0.20196E 06	0.84026E 03	-0.37711E 03	0.64956E 05	0.17683E 03	0.81226E 02
-0.10878E 05	0.49346E 02	-0.30186E 02	0.11583E 01	-0.86610E 00	-0.29223E 00	0.12327E-02	-0.18160E-02	0.58328E-03
0.11934E-05	-0.13206E-04	0.12013E-04	0.16519E-07	-0.13445E-06	0.11793E-06			

ROW 10

0.96516E 05	-0.38363E 05	0.13363E 04	-0.41191E 05	0.14875E 04	0.17097E 03	0.25129E 05	-0.37443E 02	-0.22449E 02
-0.42037E 04	0.17561E 02	-0.48021E 00	0.35906E 00	0.12115E 00	-0.51104E-03	0.75285E-03	-0.24182E-03	-0.49477E-06
0.54750E-05	-0.49803E-05	-0.68489E-08	0.55739E-07	-0.48890E-07				

ROW 11

0.76064E 06	-0.65086E 02	-0.33379E 03	-0.21396E 06	-0.53577E 02	0.69927E 03	0.68881E 05	0.18838E 02	-0.12305E 03
-0.11483E 05	0.35797E 01	-0.26766E 01	-0.90312E 00	0.38095E-02	-0.56121E-02	0.18026E-02	0.36883E-05	-0.40814E-04
0.37125E-04	0.51050E-07	-0.41550E-06	0.36445E-06					

ROW 12

0.18436E 06	-0.51049E 05	0.24255E 05	-0.10107E 06	0.22992E 04	-0.34927E 03	0.26797E 05	-0.43714E 03	0.75618E 02
-0.12621E 00	0.94370E-01	0.31841E-01	-0.13431E-03	0.19787E-03	-0.63555E-04	-0.13004E-06	0.14390E-05	-0.13089E-05
-0.17999E-08	0.14649E-07	-0.12849E-07						

ROW 13

0.20294E 06	-0.50733E 05	0.16050E 04	-0.91492E 05	0.20494E 04	0.25464E 02	0.25271E 05	-0.20385E 03	-0.11201E-01
0.83754E-02	0.28260E-02	-0.11920E-04	0.17561E-04	-0.56406E-05	-0.11541E-07	0.12771E-06	-0.11617E-06	-0.15974E-09
0.13002E-08	-0.11404E-08							

ROW 14

0.19388E 06	-0.77602E 02	0.15963E 04	-0.10709E 06	-0.65459E 02	0.10508E 02	0.28277E 05	-0.35841E 00	0.26799E 00
0.90421E-01	-0.38141E-03	0.56189E-03	-0.18048E-03	-0.36928E-06	0.40863E-05	-0.37170E-05	-0.51112E-08	0.41601E-07
-0.36489E-07								

ROW 15

0.13639E 06	-0.69129E 05	0.32645E 05	-0.39569E 05	0.34129E 04	-0.46723E 03	0.31431E-01	-0.23501E-01	-0.79295E-02
0.33448E-04	-0.49275E-04	0.15827E-04	0.32384E-07	-0.35835E-06	0.32597E-06	0.44823E-09	-0.36482E-08	0.31999E-08

ROW 16

0.23796E 06	-0.68975E 05	0.27417E 04	-0.43167E 05	0.29664E 04	0.21453E-02	-0.16041E-02	-0.54124E-03	0.22831E-05
-0.33634E-05	0.10803E-05	0.22104E-08	-0.24460E-07	0.22249E-07	0.30594E-10	-0.24901E-09	0.21842E-09	

ROW 17

0.14224E 06	-0.10793E 03	0.25542E 04	-0.41321E 05	0.90214E-01	-0.67455E-01	-0.22760E-01	0.96005E-04	-0.14143E-03
0.45428E-04	0.92950E-07	-0.10286E-05	0.93561E-06	0.12865E-08	-0.10471E-07	0.91847E-08		

ROW 18

0.64224E 05	-0.93278E 05	0.45294E 05	-0.52510E-02	0.39262E-02	0.13247E-02	-0.55880E-05	0.82322E-05	-0.26442E-05
-0.54101E-08	0.59867E-07	-0.54457E-07	-0.74883E-10	0.60948E-09	-0.53460E-09			

ROW 19

0.20261E 06	-0.92801E 05	-0.33790E-03	0.25265E-03	0.85246E-04	-0.35958E-06	0.52973E-06	-0.17015E-06	-0.34814E-09
0.38524E-08	-0.35043E-08	-0.48187E-11	0.39220E-10	-0.34401E-10				

ROW 20

0.64573E 05	-0.15038E-01	0.11244E-01	0.37940E-02	-0.16004E-04	0.23577E-04	-0.75728E-05	-0.15494E-07	0.17146E-06
-0.15596E-06	-0.21446E-09	0.17455E-08	-0.15311E-08					

ROW 21

0.11438E 06	-0.13578E 06	0.26905E 05	-0.11891E 05	0.20158E 04	-0.16660E 03	0.64535E 04	0.48877E 02	-0.17898E 01
-0.10753E 04	-0.84226E 01	0.33240E 00						

ROW 22

0.53063E 06	-0.47288E 05	0.77597E 03	-0.67125E 05	0.32870E 02	0.52467E 03	0.19777E 05	0.26735E 03	-0.90760E 02

248934

```
 -0.32924E 04  -0.45462E 02

ROW  23
  0.25273E 05  -0.19461E 03   0.70749E 03  -0.10327E 05  -0.21770E 01   0.25256E 02   0.64203E 04   0.32666E 00  -0.39783E 01
 -0.10703E 04

ROW  24
  0.18156E 06  -0.11161E 06   0.36243E 05  -0.24544E 05   0.22169E 04  -0.17970E 03   0.64498E 04  -0.34655E 02  -0.40350E 01

ROW  25
  0.21299E 06  -0.55283E 05   0.21575E 04  -0.30378E 05   0.73641E 03  -0.23777E 02   0.72766E 04  -0.12175E 02

ROW  26
  0.44907E 05  -0.17970E 03   0.76672E 03  -0.23014E 05  -0.40320E 01  -0.17629E 02   0.64195E 04

ROW  27
  0.10154E 06  -0.11218E 06   0.36234E 05  -0.13916E 05   0.25090E 04  -0.17789E 03

ROW  28
  0.19455E 06  -0.55572E 05   0.25088E 04  -0.13211E 05   0.91545E 03

ROW  29
  0.44903E 05  -0.17789E 03   0.91555E 03  -0.10318E 05

ROW  30
  0.78076E 05  -0.10987E 06   0.36056E 05

ROW  31
  0.16892E 06  -0.54759E 05

ROW  32
  0.22960E 05
```

R E D U C E D U P P E R T R I A N G U L A R F L E X I B I L I T Y M A T R I X

```
ROW   1
  0.83073E-04   0.43438E-04   0.21776E-04   0.72572E-05  -0.16051E-05   0.21394E-05   0.42789E-05   0.24880E-05  -0.41524E-06
 -0.29351E-06   0.20012E-07  -0.11100E-05  -0.59161E-06  -0.41861E-07  -0.16806E-05  -0.92676E-06  -0.17898E-06  -0.21875E-05
 -0.12731E-05  -0.35927E-06   0.35644E-05   0.42790E-05   0.57038E-05   0.35651E-05   0.42797E-05   0.57046E-05   0.35661E-05
  0.42807E-05   0.57056E-05   0.35672E-05   0.42818E-05   0.57066E-05

ROW   2
  0.25228E-04   0.13565E-04   0.47588E-05  -0.10701E-05   0.14263E-05   0.28526E-05   0.49920E-05  -0.27683E-06  -0.19567E-06
  0.13341E-07  -0.73998E-06  -0.39441E-06  -0.27908E-07  -0.11204E-05  -0.61784E-06  -0.11927E-06  -0.14583E-05  -0.84874E-06
 -0.23951E-06   0.23763E-05   0.28526E-05   0.38026E-05   0.23767E-05   0.28531E-05   0.38031E-05   0.23774E-05   0.28538E-05
  0.38037E-05   0.23781E-05   0.28545E-05   0.38044E-05

ROW   3
  0.80911E-05   0.30932E-05  -0.71340E-06   0.95087E-06   0.19817E-05   0.33280E-05  -0.18455E-06  -0.13045E-06   0.88942E-08
 -0.49332E-06  -0.26294E-06  -0.18605E-07  -0.74695E-06  -0.41190E-06  -0.79511E-07  -0.97223E-06  -0.56583E-06  -0.15968E-06
  0.15842E-05   0.19018E-05   0.25350E-05   0.15845E-05   0.19021E-05   0.25354E-05   0.15849E-05   0.19025E-05   0.25358E-05
  0.15854E-05   0.19030E-05   0.25363E-05

ROW   4
  0.14275E-05  -0.35670E-06   0.47544E-06   0.95088E-06   0.16640E-05  -0.92278E-07  -0.65224E-07   0.44471E-08  -0.24666E-06
 -0.13147E-06  -0.93026E-08  -0.37348E-06  -0.20595E-06  -0.39756E-07  -0.48612E-06  -0.28292E-06  -0.79839E-07   0.79209E-06
  0.95089E-06   0.12675E-05   0.79225E-06   0.95105E-06   0.12677E-05   0.79247E-06   0.95128E-06   0.12679E-05   0.79272E-06
  0.95151E-06   0.12682E-05
```

ROW 5

0.23788E-06	-0.35673E-06	-0.71346E-06	-0.12486E-05	0.34716E-07	0.25249E-07	-0.54194E-08	0.92012E-07	0.44197E-07
-0.70910E-08	0.13740E-06	0.67302E-07	-0.21219E-08	0.17671E-06	0.91708E-07	0.67599E-08	-0.59433E-06	-0.71348E-06
-0.95106E-06	-0.59445E-06	-0.71360E-06	-0.95119E-06	-0.59461E-06	-0.71376E-06	-0.95135E-06	-0.59479E-06	-0.71394E-06
-0.95152E-06								

ROW 6

0.14277E-05	0.30935E-05	0.55921E-05	-0.46584E-07	-0.35771E-07	0.17230E-07	-0.12138E-06	-0.45315E-07	0.37667E-07
-0.17610E-06	-0.63257E-07	0.48243E-07	-0.22071E-06	-0.83882E-07	0.52880E-07	0.25371E-05	0.30935E-05	0.42029E-05
0.25376E-05	0.30940E-05	0.42035E-05	0.25384E-05	0.30948E-05	0.42042E-05	0.25392E-05	0.30955E-05	0.42049E-05

ROW 7

0.76155E-05	0.14756E-04	-0.93169E-07	-0.71542E-07	0.34461E-07	-0.24277E-06	-0.90639E-07	0.75333E-07	-0.35221E-06
-0.12651E-06	0.96487E-07	-0.44143E-06	-0.16776E-06	0.10568E-06	0.60257E-05	0.76156E-05	0.10786E-04	0.60270E-05
0.76169E-05	0.10787E-04	0.60287E-05	0.76187E-05	0.10789E-04	0.60307E-05	0.76206E-05	0.10791E-04	

ROW 8

0.33679E-04	-0.16305E-06	-0.12520E-06	0.60306E-07	-0.42484E-06	-0.15868E-06	0.13183E-06	-0.61636E-06	-0.22140E-06
0.16885E-06	-0.77250E-06	-0.29358E-06	0.16488E-06	0.11258E-04	0.14756E-04	0.21731E-04	0.11260E-04	0.14758E-04
0.21734E-04	0.11264E-04	0.14762E-04	0.21737E-04	0.11267E-04	0.14766E-04	0.21741E-04		

ROW 9

0.38916E-05	0.21342E-05	0.26835E-06	0.14387E-04	0.82794E-05	0.21478E-05	0.23509E-04	0.14397E-04	0.52837E-05
0.31876E-04	0.20484E-04	0.90874E-05	-0.77611E-07	-0.93170E-07	-0.12420E-06	-0.77626E-07	-0.93186E-07	-0.12421E-06
-0.77648E-07	-0.93208E-07	-0.12423E-06	-0.77672E-07	-0.93231E-07	-0.12426E-06			

ROW 10

0.13711E-04	0.19517E-05	0.79186E-05	0.94396E-05	0.73152E-05	0.10977E-04	0.10285E-04	0.10251E-04	0.13114E-04
0.12684E-04	0.12362E-04	-0.59596E-07	-0.71543E-07	-0.95366E-07	-0.59607E-07	-0.71555E-07	-0.95380E-07	-0.59624E-07
-0.71572E-07	-0.95396E-07	-0.59642E-07	-0.71590E-07	-0.95413E-07				

ROW 11

0.36776E-05	0.21696E-05	0.79270E-05	0.13698E-04	0.53575E-05	0.13941E-04	0.22528E-04	0.92553E-05	0.19989E-04
0.30727E-04	0.28706E-07	0.34461E-07	0.45936E-07	0.28712E-07	0.34467E-07	0.45943E-07	0.28720E-07	0.34475E-07
0.45951E-07	0.28729E-07	0.34484E-07	0.45959E-07					

ROW 12

0.92695E-04	0.56012E-04	0.17312E-04	0.17368E-03	0.10746E-03	0.41823E-04	0.24744E-03	0.15962E-03	0.71792E-04
-0.20223E-06	-0.24277E-06	-0.32361E-06	-0.20227E-06	-0.24281E-06	-0.32366E-06	-0.20233E-06	-0.24287E-06	-0.32371E-06
-0.20239E-06	-0.24293E-06	-0.32377E-06						

ROW 13

0.62750E-04	0.53786E-04	0.11335E-03	0.11295E-03	0.10933E-03	0.16895E-03	0.16600E-03	0.16365E-03	-0.75496E-07
-0.90631E-07	-0.12081E-06	-0.75511E-07	-0.90646E-07	-0.12083E-06	-0.75531E-07	-0.90667E-07	-0.12085E-06	-0.75554E-07
-0.90689E-07	-0.12087E-06							

ROW 14

0.88655E-04	0.42017E-04	0.10416E-03	0.16699E-03	0.72556E-04	0.15582E-03	0.23919E-03	0.62754E-07	0.75335E-07
0.10042E-06	0.62767E-07	0.75348E-07	0.10043E-06	0.62785E-07	0.75366E-07	0.10045E-06	0.62804E-07	0.75385E-07
0.10047E-06								

ROW 15

0.37984E-03	0.23767E-03	0.97486E-04	0.57876E-03	0.37131E-03	0.16460E-03	-0.29339E-06	-0.35221E-06	-0.46950E-06
-0.29345E-06	-0.35227E-06	-0.46956E-06	-0.29353E-06	-0.35235E-06	-0.46964E-06	-0.29362E-06	-0.35244E-06	-0.46973E-06

ROW 16

0.23884E-03	0.23023E-03	0.37355E-03	0.36895E-03	0.36684E-03	-0.10539E-06	-0.12652E-06	-0.16664E-06	-0.10541E-06
-0.12654E-06	-0.16667E-06	-0.10544E-06	-0.12656E-06	-0.16669E-06	-0.10547E-06	-0.12660E-06	-0.16672E-06	

ROW 17

0.36669E-03	0.16575E-03	0.36308E-03	0.56347E-03	0.80375E-07	0.96488E-07	.12862E-06	0.80392E-07	0.96505E-07

```
0.12864E-06  0.80415E-07  0.96529E-07  0.12866E-06  0.80440E-07  0.96554E-07  0.12868E-06

ROW 18
0.95567E-03  0.61266E-03  0.27337E-03 -0.36771E-06 -0.34143E-06 -0.58843E-06 -0.36779E-06 -0.44151E-06 -0.58851E-06
-0.36789E-06 -0.44161E-06 -0.58861E-06 -0.37800E-06 -0.44172E-06 -0.58871E-06

ROW 19
0.60946E-03  0.59980E-03 -0.13975E-06 -0.16777E-06 -0.22365E-06 -0.13978E-06 -0.16779E-06 -0.22366E-06 -0.13981E-06
-0.16783E-06 -0.22370E-06 -0.13985E-06 -0.16787E-06 -0.22374E-06

ROW 20
0.93067E-03  0.87966E-07  0.10560E-06  0.14077E-06  0.87985E-07  0.10562E-06  0.14079E-06  0.88010E-07  0.10565E-06
0.14081E-06  0.88039E-07  0.10567E-06  0.14084E-06

ROW 21
0.23744E-04  0.11235E-04 -0.46898E-05  0.36326E-04  0.26560E-04  0.75275E-05  0.49936E-04  0.40147E-04  0.20465E-04
0.63575E-04  0.53546E-04  0.33562E-04

ROW 22
0.12825E-04  0.15995E-04  0.26868E-04  0.28457E-04  0.31628E-04  0.42504E-04  0.44094E-04  0.47264E-04  0.58141E-04
0.59731E-04  0.62900E-04

ROW 23
0.92993E-04 -0.10919E-05  0.30420E-04  0.95105E-04  0.65334E-05  0.37983E-04  0.10006E-03  0.14282E-04  0.44783E-04
0.10566E-03

ROW 24
0.34403E-03  0.21467E-03 -0.21967E-04  0.62871E-03  0.42586E-03  0.19527E-04  0.88899E-03  0.62499E-03  0.97524E-04

ROW 25
0.21662E-03  0.22524E-03  0.42681E-03  0.43012E-03  0.43344E-03  0.64007E-03  0.64099E-03  0.64319E-03

ROW 26
0.73908E-03  0.54322E-04  0.46788E-03  0.12910E-02  0.18843E-03  0.71837E-03  0.17773E-02

ROW 27
0.13290E-02  0.95532E-03  0.21259E-03  0.20101E-02  0.14889E-02  0.44760E-03

ROW 28
0.96797E-03  0.97834E-03  0.15160E-02  0.15146E-02  0.15115E-02

ROW 29
0.25054E-02  0.52507E-03  0.15593E-02  0.36270E-02

ROW 30
0.32860E-02  0.25098E-02  0.96514E-03

ROW 31
0.25097E-02  0.24980E-02

ROW 32
0.55671E-02
```

UPPER TRIANGLE OF EXPANDED FLEXIBILITY MATRIX WITH ATTACH POINTS INCLUDED

ROW 1

0.83073E-04	0.43438E-04	0.21776E-04	0.72572E-05	0.	-0.16051E-05	0.	0.21394E-05
0.42789E-05	0.74880E-05	-0.41524E-06	-0.29351E-06	0.20012E-07	-0.11100E-05	-0.59161E-06	-0.41861E-0
-0.16806E-05	-0.92676E-06	-0.17890E-06	-0.21875E-05	-0.12731E-05	-0.35927E-06	0.35644E-05	0.42730E-05
0.57038E-05	0.35651E-05	0.42797E-05	0.57046E-05	0.35661E-05	0.42807E-05	0.57056E-05	0.35672E-05
0.42818E-05	0.57066E-05						

ROW 2

0.25228E-04	0.13565E-04	0.47588E-05	0.	-0.10701E-05	0.	0.14263E-05	0.28526E-05
0.49920E-05	-0.27683E-06	-0.19567E-06	0.13341E-07	-0.73998E-06	-0.39441E-06	-0.27908E-07	-0.11204E-05
-0.61784E-06	-0.11927E-06	-0.14583E-05	-0.84874E-06	-0.23951E-06	0.23763E-05	0.28526E-05	0.38026E-05
0.23767E-05	0.28531E-05	0.38031E-05	0.23774E-05	0.28538E-05	0.38037E-05	0.23781E-05	0.28545E-05
0.38044E-05							

ROW 3

0.80911E-05	0.30932E-05	0.	-0.71340E-06	0.	0.95087E-06	0.19017E-05	0.33280E-05
-0.18455E-06	-0.13045E-06	0.88942E-08	-0.49332E-06	-0.26294E-06	-0.18605E-07	-0.74695E-06	-0.41190E-06
-0.79511E-07	-0.97223E-06	-0.56583E-06	-0.15968E-06	0.15842E-05	0.19018E-05	0.25350E-05	0.15845E-05
0.19021E-05	0.25354E-05	0.15849E-05	0.19025E-05	0.25358E-05	0.15854E-05	0.19030E-05	0.25363E-05

ROW 4

0.14275E-05	0.	-0.35670E-06	0.	0.47544E-06	0.95088E-06	0.16840E-05	-0.22278E-07
-0.65224E-07	0.44471E-08	-0.24666E-06	-0.13147E-06	-0.93026E-08	-0.37348E-06	-0.20595E-06	-0.39756E-07
-0.48612E-06	-0.28292E-06	-0.79839E-07	0.79209E-06	0.95089E-06	0.12675E-05	0.79225E-06	0.95105E-06
0.12677E-05	0.79247E-06	0.95128E-06	0.12679E-05	0.79272E-06	0.95151E-06	0.12682E-05	

ROW 5

0.	0.	0.	0.	0.	0.	0.	0.
0.	0.	0.	0.	0.	0.	0.	0.
0.	0.	0.	0.	0.	0.	0.	0.
0.	0.	0.	0.	0.	0.		

ROW 6

0.23788E-06	0.	-0.35673E-06	-0.71346E-06	-0.12486E-05	0.34716E-07	0.25249E-07	-0.54194E-08
0.92012E-07	0.44197E-07	-0.70910E-08	0.13740E-06	0.67302E-07	-0.21219E-08	0.17671E-06	0.91700E-07
0.67599E-08	-0.59433E-06	-0.71348E-06	-0.95106E-06	-0.59445E-06	-0.71360E-06	-0.95119E-06	-0.59461E-06
-0.71376E-06	-0.95135E-06	-0.59479E-06	-0.71394E-06	-0.95152E-06			

ROW 7

0.	0.	0.	0.	0.	0.	0.	0.
0.	0.	0.	0.	0.	0.	0.	0.
0.	0.	0.	0.	0.	0.	0.	0.
0.	0.	0.	0.				

ROW 8

0.14277E-05	0.30935E-05	0.55921E-05	-0.46584E-07	-0.35771E-07	0.17230E-07	-0.12138E-06	-0.45315E-07
0.37667E-07	-0.17610E-06	-0.63257E-07	0.48243E-07	-0.22071E-06	-0.83802E-07	0.52800E-07	0.25371E-05
0.30935E-05	0.42029E-05	0.25376E-05	0.30940E-05	0.42035E-05	0.25384E-05	0.30948E-05	0.42042E-05
0.25392E-05	0.30952E-05	0.42049E-05					

ROW 9

0.76155E-05	0.14756E-04	-0.93169E-07	-0.71542E-07	0.34461E-07	-0.24277E-06	-0.90630E-07	0.75333E-07
-0.35221E-06	-0.12651E-06	0.96487E-07	-0.44143E-06	-0.16776E-06	0.10560E-06	0.60257E-05	0.76156E-05
0.10786E-04	0.60270E-05	0.76169E-05	0.10787E-04	0.60287E-05	0.76187E-05	0.10789E-04	0.60307E-05
0.76206E-05	0.10791E-04						

ROW 10

0.33679E-04	-0.16305E-06	-0.12520E-06	0.60306E-07	-0.42484E-06	-0.15860E-06	0.13183E-06	-0.61636E-06
-0.22148E-06	0.16885E-06	-0.77250E-06	-0.29358E-06	0.18480E-06	0.11258E-04	0.14756E-04	0.21731E-04
0.11268E-04	0.14758E-04	0.21734E-04	0.11264E-04	0.14762E-04	0.21737E-04	0.11267E-04	0.14766E-04
0.21741E-04							

ROW 11

0.38916E-05	0.21342E-05	0.26835E-06	0.14387E-04	0.82794E-05	0.21478E-05	0.23509E-04	0.14397E-04
0.52837E-05	0.31876E-04	0.20484E-04	0.90874E-05	-0.77611E-07	-0.93170E-07	-0.12420E-06	-0.77626E-07
-0.93186E-07	-0.12421E-06	-0.77648E-07	-0.93208E-07	-0.12423E-06	-0.77672E-07	-0.93231E-07	-0.12426E-06

ROW 12

0.13711E-04	0.19517E-05	0.79186E-05	0.94396E-05	0.73152E-05	0.18977E-04	0.18205E-04	0.10251E-04
0.13114E-04	0.12684E-04	0.12362E-04	-0.59596E-07	-0.71543E-07	-0.95366E-07	-0.59687E-07	-0.71555E-07
-0.95388E-07	-0.59624E-07	-0.71572E-07	-0.95396E-07	-0.59642E-07	-0.71598E-07	-0.95413E-07	

ROW 13

0.36776E-05	0.21696E-05	0.79270E-05	0.13698E-04	0.53575E-05	0.13941E-04	0.22528E-04	0.92553E-05
0.19989E-04	0.30727E-04	0.28706E-07	0.34461E-07	0.45936E-07	0.28712E-07	0.34467E-07	0.45943E-07
0.28720E-07	0.34475E-07	0.45951E-07	0.28729E-07	0.34484E-07	0.45959E-07		

ROW 14

0.92695E-04	0.56012E-04	0.17312E-04	0.17368E-03	0.10746E-03	0.41823E-04	0.24744E-03	0.15962E-03
0.71792E-04	-0.20223E-06	-0.24277E-06	-0.32361E-06	-0.20227E-06	-0.24281E-06	-0.32366E-06	-0.20233E-06
-0.24287E-06	-0.32371E-06	-0.20239E-06	-0.24293E-06	-0.32377E-06			

ROW 15

0.62758E-04	0.53786E-04	0.11335E-03	0.11295E-03	0.10933E-03	0.16895E-03	0.16680E-03	0.16365E-03
-0.75496E-07	-0.90631E-07	-0.12081E-06	-0.75511E-07	-0.90646E-07	-0.12083E-06	-0.75531E-07	-0.90667E-07
-0.12085E-06	-0.75554E-07	-0.90689E-07	-0.12087E-06				

ROW 16

0.88659E-04	0.42017E-04	0.10416E-03	0.16699E-03	0.72556E-04	0.15582E-03	0.23919E-03	0.62754E-07
0.75335E-07	0.10842E-06	0.62767E-07	0.75348E-07	0.10843E-06	0.62785E-07	0.75366E-07	0.10845E-06
0.62804E-07	0.75385E-07	0.10847E-06					

ROW 17

0.37984E-03	0.23767E-03	0.97486E-04	0.57876E-03	0.37131E-03	0.16468E-03	-0.29339E-06	-0.35221E-06
-0.46950E-06	-0.29345E-06	-0.35227E-06	-0.46956E-06	-0.29353E-06	-0.35235E-06	-0.46964E-06	-0.29362E-06
-0.35244E-06	-0.46973E-06						

ROW 18

0.23884E-03	0.23093E-03	0.37355E-03	0.36895E-03	0.36384E-03	-0.18539E-06	-0.12652E-06	-0.16864E-06
-0.10541E-06	-0.12654E-06	-0.16867E-06	-0.18544E-06	-0.12656E-06	-0.16869E-06	-0.10547E-06	-0.12660E-06

-0.16872E-06

ROW 19

0.36669E-03	0.16575E-03	0.36308E-03	0.56147E-03	0.60375E-07	0.96488E-07	0.12862E-06	0.89392E-07
0.96585E-07	0.12864E-06	0.80415E-07	0.96529E-07	0.12866E-06	0.80440E-07	0.96554E-07	0.12868E-06

ROW 20

0.95567E-03	0.61266E-03	0.27337E-03	-0.36771E-06	-0.44143E-06	-0.58843E-06	-0.36779E-06	-0.44153E-06
-0.58851E-06	-0.36789E-06	-0.44161E-06	-0.58861E-06	-0.36888E-06	-0.44172E-06	-0.58871E-06	

ROW 21

0.68948E-03	0.59980E-03	-0.13975E-06	-0.16777E-06	-0.22363E-06	-0.13978E-06	-0.16779E-06	-0.22366E-06
-0.13981E-06	-0.16783E-06	-0.22370E-06	-0.13985E-06	-0.16787E-06	-0.22374E-06		

ROW 22

0.93067E-03	0.87966E-07	0.10560E-06	0.14077E-06	0.87985E-07	0.10562E-06	0.14079E-06	0.88013E-07
0.10565E-06	0.14081E-06	0.88039E-07	0.10567E-06	0.14084E-06			

ROW 23

0.23744E-04	0.11235E-04	-0.46098E-05	0.36326E-04	0.26560E-04	0.75275E-05	0.49936E-04	[illegible]
0.28469E-04	0.63575E-04	0.53546E-04	0.33562E-04				

ROW 24

0.12825E-04	0.15995E-04	0.26868E-04	0.28457E-04	0.31628E-04	0.42594E-04	0.44894E-04	[illegible]
0.58141E-04	0.59731E-04	0.62999E-04					

ROW 25

0.92993E-04	-0.10919E-05	0.38428E-04	0.95185E-04	0.65334E-05	0.37983E-04	[illegible]	0.[illegible]282E-04
0.44783E-04	0.10566E-03						

ROW 26

0.34483E-03	0.31467E-03	-0.21967E-04	0.62871E-03	0.42586E-03	[illegible]	0.8869[illegible]E-03	0.62499E-03
0.97524E-04							

ROW 27

0.21652E-03	0.22524E-03	0.42681E-03	0.43812E-03	0.43[illegible]44[illegible]3	0.64987E-03	0.64999E-03	0.64[illegible]

ROW 28

0.73988E-03	0.54322E-04	0.46788E-03	0.12910E-02	0.18643E-03	0.71837E-03	0.17[illegible]1E-02

ROW 29

0.13298E-02	[illegible]95537E-03	0.21259E-03	0.20101E-02	0.14869E-02	0.44760E-03

ROW 30

0.94797E-[illegible]1	[illegible]7834E-03	0.15168E-02	0.15146E-02	0.15119E-0[illegible]

ROW 31

[illegible].2585[illegible]E-3[illegible]	50[illegible]E-03	0.[illegible]593E-02	0.36274E-[illegible]

ROW 32

0.32660E-02 0.25098E-02 0.96514E-03

ROW 33

0.25097E-02 0.24980E-02

ROW 34

0.55671E-02

R E D U C E D U P P E R T R I A N G U L A R W E I G H T M A T R I X

ROW 1

0.25000E 02	0.	0.	0.	0.	0.	0.	0.	0.
0.	0.	0.	0.	0.	0.	0.	0.	0.
0.	0.	0.	0.	0.	0.	0.	0.	0.
0.	0.	0.	0.	0.				

ROW 2

0.25000E 02	0.	0.	0.	0.	0.	0.	0.	0.
0.	0.	0.	0.	0.	0.	0.	0.	0.
0.	0.	0.	0.	0.	0.	0.	0.	0.
0.	0.	0.	0.					

ROW 3

0.50000E 02	0.	0.	0.	0.	0.	0.	0.	0.
0.	0.	0.	0.	0.	0.	0.	0.	0.
0.	0.	0.	0.	0.	0.	0.	0.	0.
0.	0.	0.						

ROW 4

0.50000E 02	0.	0.	0.	0.	0.	0.	0.	0.
0.	0.	0.	0.	0.	0.	0.	0.	0.
0.	0.	0.	0.	0.	0.	0.	0.	0.
0.	0.							

ROW 5

0.50000E 02	0.	0.	0.	0.	0.	0.	0.	0.
0.	0.	0.	0.	0.	0.	0.	0.	0.
0.	0.	0.	0.	0.	0.	0.	0.	0.
0.								

ROW 6

0.75000E 02	0.	0.	0.	0.	0.	0.	0.	0.
0.	0.	0.	0.	0.	0.	0.	0.	0.
0.	0.	0.	0.	0.	0.	0.	0.	0.

ROW 7

0.75000E 02	0.	0.	0.	0.	0.	0.	0.	0.
0.	0.	0.	0.	0.	0.	0.	0.	0.
0.	0.	0.	0.	0.	0.	0.	0.	

ROW 8

0.25000E 02	0.	0.	0.	0.	0.	0.	0.	0.
0.	0.	0.	0.	0.	0.	0.	0.	0.

0.	0.	0.	0.	0.	0.	0.		
ROW 9								
0.33300E 00	0.	0.	0.	0.	0.	0.	0.	0.
0.	0.	0.	0.	0.	0.	0.	0.	0.
0.	0.	0.	0.	0.	0.			
ROW 10								
0.33300E 00	0.	0.	0.	0.	0.	0.	0.	0.
0.	0.	0.	0.	0.	0.	0.	0.	0.
0.	0.	0.	0.	0.				
ROW 11								
0.33300E 00	0.	0.	0.	0.	0.	0.	0.	0.
0.	0.	0.	0.	0.	0.	0.	0.	0.
0.	0.	0.	0.					
ROW 12								
0.28800E 00	0.	0.	0.	0.	0.	0.	0.	0.
0.	0.	0.	0.	0.	0.	0.	0.	0.
0.	0.	0.						
ROW 13								
0.28800E 00	0.	0.	0.	0.	0.	0.	0.	0.
0.	0.	0.	0.	0.	0.	0.	0.	0.
0.	0.							
ROW 14								
0.28800E 00	0.	0.	0.	0.	0.	0.	0.	0.
0.	0.	0.	0.	0.	0.	0.	0.	0.
0.								
ROW 15								
0.25500E 00	0.	0.	0.	0.	0.	0.	0.	0.
0.	0.	0.	0.	0.	0.	0.	0.	0.
ROW 16								
0.25500E 00	0.	0.	0.	0.	0.	0.	0.	0.
0.	0.	0.	0.	0.	0.	0.	0.	
ROW 17								
0.25500E 00	0.	0.	0.	0.	0.	0.	0.	0.
0.	0.	0.	0.	0.	0.	0.		
ROW 18								
0.22200E 00	0.	0.	0.	0.	0.	0.	0.	0.
0.	0.	0.	0.	0.	0.			
ROW 19								
0.22200E 00	0.	0.	0.	0.	0.	0.	0.	0.
0.	0.	0.	0.	0.				
ROW 20								
0.22200E 00	0.	0.	0.	0.	0.	0.	0.	0.
0.	0.	0.	0.					
ROW 21								
0.84000E-01	0.	0.	0.	0.	0.	0.	0.	0.
0.	0.	0.						
ROW 22								

```
 0.12500E 00   0.    0.    0.    0.    0.    0.    0.    0.
 0.    0.
ROW  23
 0.41000E-01   0.    0.    0.    0.    0.    0.    0.    0.
 0.
ROW  24
 0.84000E-01   0.    0.    0.    0.    0.    0.    0.    0.
ROW  25
 0.12500E 00   0.    0.    0.    0.    0.    0.    0.
ROW  26
 0.41000E-01   0.    0.    0.    0.    0.    0.
ROW  27
 0.84000E-01   0.    0.    0.    0.    0.
ROW  28
 0.12500E 00   0.    0.    0.    0.
ROW  29
 0.41000E-01   0.    0.    0.
ROW  30
 0.84000E-01   0.    0.
ROW  31
 0.12500E 00   0.
ROW  32
 0.41000E-01
```

HERE ARE THE EIGENVALUES AND EIGENVECTORS

```
EIGENVECTOR NUMBER    1
          CORRESPONDING TO  1.2431656E 05
 1.0000000E 00  5.4947504E-01  2.8956006E-01  1.0198256E-01 -2.5893890E-02  4.7414512E-02
 1.0449420E-01  1.9933320E-01 -6.3802740E-03 -4.5111410E-03  3.5171355E-04 -1.8137977E-02
-9.9251658E-03 -1.0594392E-03 -2.8622349E-02 -1.6271178E-02 -3.9874489E-03 -3.8304938E-02
-2.3806465E-02 -7.7221027E-03  8.5711401E-02  1.0582023E-01  1.4553430E-01  9.8412937E-02
 1.1959757E-01  1.6289247E-01  1.1684120E-01  1.3910497E-01  1.8331725E-01  1.3777984E-01
 1.6027544E-01  2.0511256E-01

EIGENVECTOR NUMBER    2
          CORRESPONDING TO  2.8039211E 05
-1.5489999E-01 -6.4672757E-02 -1.8471959E-02  3.9698523E-03 -1.7664241E-02  9.5851244E-02
 2.4696881E-01  5.2824663E-01 -1.6082869E-03 -1.2949356E-03  1.0799532E-03 -4.5213562E-03
-1.0817058E-03  2.7339503E-03 -6.8087791E-03 -1.3560454E-03  4.0358022E-03 -8.7062718E-03
-1.8082248E-03  5.0825463E-03  2.0374804E-01  2.6093091E-01  3.6981248E-01  3.4374429E-01
 4.0913597E-01  5.5092826E-01  5.4776460E-01  6.2167224E-01  7.6713595E-01  7.8061574E-01
 8.5399114E-01  1.0000000E 00

EIGENVECTOR NUMBER    3
          CORRESPONDING TO  4.3328807E 05
 2.1796538E-03  6.5790983E-04 -5.6583332E-05 -2.8292817E-04  4.7629906E-04 -2.4253131E-03
-6.3457842E-03 -1.4308372E-02  5.1749603E-05  3.9357314E-05 -2.8699178E-05  1.4919521E-04
 4.0666132E-05 -7.7678451E-05  2.3026971E-04  5.4660994E-05 -1.1925886E-04  2.9989769E-04
 7.3603010E-05 -1.5379343E-04  1.5759983E-02  1.5922906E-02  6.1527410E-03  2.5559960E-01
 2.5735382E-01  2.7953943E-01  6.0323156E-01  6.0790122E-01  6.1417854E-01  1.0000000E 00
 9.9356139E-01  9.8001037E-01

EIGENVECTOR NUMBER    4
          CORRESPONDING TO  6.2475530E 05
 9.7551997E-04  1.6820259E-04 -1.7880596E-04 -2.3098697E-04  8.9622011E-05  2.2531093E-05
 1.0694025E-04  3.0328284E-04  3.6020923E-02  2.4747506E-02  3.4522297E-02  2.7336800E-01
 2.8251094E-01  2.6233973E-01  6.1939248E-01  6.0975550E-01  5.9592726E-01  1.0000000E 00
 9.8168848E-01  9.6441956E-01  7.0102572E-05  1.0493107E-04  1.7551359E-04  3.8747457E-05
 8.1975391E-05  1.6664724E-04 -1.7349771E-06  4.8573347E-05  1.4940868E-04 -4.6776962E-05
 1.0983098E-05  1.2598648E-04

EIGENVECTOR NUMBER    5
          CORRESPONDING TO  1.2676136E 06
 1.3755801E-04 -2.3155412E-05 -7.7436280E-05 -6.2546180E-05  5.7484782E-05 -2.2257886E-04
-3.9337577E-04 -6.6603086E-04  9.2045341E-06  5.0705673E-06 -6.5691127E-06  3.3424150E-05
-8.4378481E-08 -3.4136023E-05  5.9343342E-05 -5.8720263E-06 -7.0847655E-05  8.3280078E-05
-1.2677529E-05 -1.0871998E-04 -9.7864893E-03 -4.7456958E-04  2.3681893E-02 -1.8488673E-01
-1.0025687E-03  3.6595235E-01 -3.4812518E-01  1.5045557E-04  6.9436927E-01 -4.9240754E-01
 5.3561601E-03  1.0000000E 00
```

HERE ARE THE NATURAL FREQUENCIES

THE NATURAL FREQUENCY NUMBER	1	IS	56.116	CPS
THE NATURAL FREQUENCY NUMBER	2	IS	84.276	CPS
THE NATURAL FREQUENCY NUMBER	3	IS	104.763	CPS
THE NATURAL FREQUENCY NUMBER	4	IS	125.798	CPS
THE NATURAL FREQUENCY NUMBER	5	IS	179.198	CPS

HUGHES AIRCRAFT CO. SUBSONIC AIC PROGRAM

FLIGHT CONDITIONS AND GEOMETRY

MACH NUMBER = 0.50000 SPEED OF SOUND = 13480.000 L/T RHO=0.10000000E 01

	WING	TAIL
L.E. STATION (L)	0.	40.000
ROOT CHORD (L)	30.000	15.000
L.E. SPAN (L)	0.	35.000
T.E. SPAN (L)	35.000	35.000
TIP CHORD (L)	20.000	15.000
TOTAL AREA (L*L)	1750.000	1050.000
SPAN COLL. STA.	4	4
CHORD COLL. STA.	3	3
CHORD INTG. STA.	18	18
SPAN PRES MODES	4	4
CHORD PRES MODES	3	3

HUGHES AIRCRAFT CO. SUBSONIC AIC PROGRAM (CONT-D)

OSCILLATORY FREQUENCY (CPS) 7.15136E 01

REFERENCE CHORD 1.50000E 01

REDUCED FREQUENCY (REF. CHORD) 1.00000E 00

REDUCED VELOCITY (REF. CHORD) 1.00000E 00

FREE STREAM MACH NUMBER 5.00000E-01

FREE STREAM VELOCITY 6.74000E 03

DENSITY 1.00

DYNAMIC PRESSURE (1/2*RHO*VEL**2) 2.27138E 07

AERODYNAMIC INFLUENCE COEFFICIENTS

RL	IM	RL	IM	RL	IM	RL	IM	RL	IM
ROW = 1									
2.6152E 00	-7.3687E-01	-4.8823E 00	-3.2104E-01	3.0947E 00	3.1773E-02	-6.8182E 00	1.6042E 00	1.1440E 01	-3.3341E-01
-5.4858E 00	-5.7732E-02	4.2262E 00	-9.7701E-01	-6.7706E 00	3.5455E-01	3.0436E 00	-2.3376E-01	-1.0421E 00	1.9187E-01
1.6664E 00	1.0982E-03	-7.1213E-01	-8.6658E-04	-2.9557E-01	9.0611E-02	6.6997E-01	-1.5677E-01	-3.2860E-01	-2.1251E-03
-3.8379E-02	3.2667E-02	7.4865E-02	-6.2473E-02	-4.3454E-02	2.3371E-02	-1.4552E-01	7.7996E-02	2.9810E-01	-1.4365E-01
-1.6693E-01	3.3885E-02	-1.1589E-02	9.1471E-03	2.4096E-02	-1.7101E-02	-1.4160E-02	5.3565E-03		
ROW = 2									
-1.0936E 00	-2.7342E-03	3.9008E 00	3.0083E 00	-1.8168E 00	-3.4271E 00	2.6669E 00	6.2186E-02	-5.7566E 00	-3.6187E 00
2.1025E 00	3.6053E 00	-1.9480E 00	-6.8787E-02	4.5326E 00	2.3169E 00	-1.9988E 00	-2.4544E 00	4.4641E-01	3.7177E-02
-8.9782E-01	-5.2946E-01	3.4812E-01	4.8335E-01	-7.7620E-02	2.5152E-01	1.7725E-01	-4.9636E-01	-1.5122E-01	2.2487E-01
-1.1350E-02	5.9325E-02	2.6955E-02	-1.1627E-01	-2.7331E-02	5.4249E-02	-3.5491E-02	1.6357E-01	8.4514E-02	-3.2211E-01
-8.1975E-02	1.4924E-01	-1.6009E-03	1.5618E-02	4.5075E-03	-3.0837E-02	-6.0436E-03	1.4706E-02		
ROW = 3									
-1.8910E 00	6.5292E-01	5.6824E 00	1.0458E 00	-3.5902E 00	-1.8191E 00	4.9241E 00	-1.4114E 00	-1.0195E 01	-7.3014E-01
4.9991E 00	1.9440E 00	-3.2432E 00	8.5815E-01	6.8259E 00	3.0930E-01	-3.4546E 00	-1.1282E 00	7.9886E-01	-1.4598E-01
-1.5538E 00	-1.8940E-01	7.2164E-01	2.8566E-01	1.9261E-01	1.1684E-01	-3.8180E-01	-2.4860E-01	1.6209E-01	1.7365E-01
2.9277E-02	2.1422E-02	-5.3739E-02	-4.4178E-02	2.0385E-02	2.7375E-02	1.0430E-01	6.4680E-02	-2.0304E-01	-1.3655E-01
8.4518E-02	9.3000E-02	9.5018E-03	5.0122E-03	-1.8626E-02	-1.0761E-02	7.9715E-03	7.7022E-03		
ROW = 4									
1.3045E 00	-3.7374E-01	-2.3091E 00	-2.2811E-01	1.3927E 00	1.2970E-02	-3.3846E 00	7.7892E-01	5.7614E 00	-1.6192E-01
-2.8097E 00	-6.2032E-02	2.9544E 00	-6.8535E-01	-4.6499E 00	1.7269E-01	2.0175E 00	-1.3141E-01	-7.2923E-01	1.3195E-01
1.1677E 00	7.5524E-03	-4.9881E-01	-5.9817E-03	-1.5964E-01	1.0047E-01	3.3272E-01	-1.8739E-01	-1.9152E-01	4.9865E-02
-3.0091E-02	2.9858E-02	6.1949E-02	-5.7347E-02	-3.7872E-02	2.1099E-02	-9.3715E-02	7.5502E-02	1.9618E-01	-1.4292E-01
-1.1675E-01	4.5701E-02	-8.5713E-03	8.1606E-03	1.8202E-02	-1.5459E-02	-1.1130E-02	5.2387E-03		
ROW = 5									
-5.5837E-01	-6.5447E-03	2.1158E 00	1.5454E 00	-1.0370E 00	-1.8195E 00	1.2668E 00	1.4596E-02	-2.7109E 00	-1.6918E 00
9.7790E-01	1.6849E 00	-1.4241E 00	-5.6690E-02	3.3526E 00	1.6952E 00	-1.5009E 00	-1.8093E 00	3.0567E-01	2.5220E-02
-6.0263E-01	-3.5473E-01	2.3030E-01	3.1900E-01	-7.0944E-02	1.9668E-01	1.5838E-01	-3.8648E-01	-1.2735E-01	1.7244E-01

-1.5893E-02	4.8666E-02	3.5788E-02	-9.5365E-02	-2.9622E-02	4.2827E-02	-4.2658E-02	1.3192E-01	9.6479E-02	-2.5902E-01	
-8.0377E-02	1.1651E-01	-3.3315E-03	1.2934E-02	7.7723E-03	-2.5441E-02	-7.0422E-03	1.1642E-02			

ROW = 6

-9.5431E-01	3.2669E-01	2.9214E 00	5.3542E-01	-1.8581E 00	-9.5127E-01	2.4058E 00	-6.9928E-01	-4.9689E 00	-3.1162E-01	
2.4447E 00	9.0898E-01	-2.3041E 00	5.9203E-01	4.8823E 00	2.8517E-01	-2.4693E 00	-8.6490E-01	5.5620E-01	-9.7584E-02	
-1.0688E 00	-1.3674E-01	4.9173E-01	1.9544E-01	1.0471E-01	8.8257E-02	-2.0473E-01	-1.8413E-01	8.0392E-02	1.1803E-01	
2.0992E-02	1.9068E-02	-3.9699E-02	-3.9268E-02	1.4782E-02	2.4110E-02	6.5099E-02	5.4146E-02	-1.2666E-01	-1.1265E-01	
4.9747E-02	7.2010E-02	6.5060E-03	4.7509E-03	-1.2782E-02	-9.9924E-03	5.2025E-03	6.6257E-03			

ROW = 7

-1.6650E-01	3.3717E-02	5.6935E-01	-1.1020E-01	-5.0237E-01	-1.5215E-02	7.6947E-01	-2.0488E-01	-1.1942E 00	3.7417E-02	
5.1267E-01	-2.7077E-02	6.0174E-01	-1.5330E-01	-7.4859E-01	-6.6767E-02	1.7594E-01	-1.5353E-02	1.9435E-01	-3.8973E-02	
-2.9148E-01	-1.8810E-03	1.1203E-01	-4.2155E-03	-6.0552E-03	9.5370E-02	1.9640E-02	-1.8959E-01	-3.3271E-02	9.1976E-02	
-1.2887E-02	2.2894E-02	2.9860E-02	-4.4628E-02	-2.1361E-02	1.7765E-02	-2.3074E-02	6.3610E-02	5.4701E-02	-1.2492E-01	
-4.4193E-02	5.4227E-02	-3.3024E-03	6.2540E-03	7.6334E-03	-1.2225E-02	-5.5480E-03	4.9704E-03			

ROW = 8

4.0641E-02	-1.3001E-02	8.1880E-02	-7.1241E-02	-1.2468E-01	-1.9969E-02	-3.8985E-01	-2.3115E-02	8.8648E-01	5.3001E-01	
-3.5881E-01	-5.4214E-01	-4.0868E-01	-2.9429E-02	1.0651E 00	5.0673E-01	-5.2510E-01	-5.7549E-01	-1.1475E-01	-6.2871E-03	
2.6668E-01	1.2500E-01	-1.2429E-01	-1.3093E-01	-5.6207E-02	1.1543E-01	1.2140E-01	-2.2478E-01	-8.8124E-02	9.6491E-02	
-1.7227E-02	3.1088E-02	3.7361E-02	-6.0762E-02	-2.6417E-02	2.5516E-02	-4.4061E-02	8.1882E-02	9.5210E-02	-1.5962E-01	
-6.7531E-02	6.7371E-02	-4.8670E-03	8.6556E-03	1.0547E-02	-1.6851E-02	-7.4004E-03	7.0273E-03			

ROW = 9

9.7246E-02	-4.2524E-02	-1.9521E-01	-1.1123E-02	1.1153E-01	8.6897E-03	-6.1485E-01	1.7086E-01	1.3039E 00	1.2241E-01	
-6.4145E-01	-2.8234E-01	-5.4211E-01	1.1642E-01	1.2134E 00	1.6256E-01	-6.1564E-01	-3.0508E-01	-1.6388E-01	3.4369E-02	
3.4791E-01	3.2246E-02	-1.7397E-01	-6.7354E-02	5.3541E-03	4.8148E-02	-6.1503E-03	-9.5861E-02	-8.9283E-03	4.8061E-02	
7.4930E-03	1.3870E-02	-1.4947E-02	-2.8227E-02	4.4000E-03	1.6268E-02	1.3698E-02	3.5697E-02	-2.5912E-02	-7.1971E-02	
4.6547E-03	3.9418E-02	1.9856E-03	3.9771E-03	-3.8437E-03	-8.0336E-03	1.0167E-03	4.5225E-03			

ROW =10

-2.6524E 00	7.0128E-01	5.5980E 00	2.0655E-01	-3.8124E 00	-2.4568E-01	9.8196E 00	-2.3479E 00	-1.6476E 01	4.6466E-01	
7.8615E 00	1.1595E-01	-5.9886E 00	1.3315E 00	9.9641E 00	-4.7121E-01	-4.6751E 00	1.6912E-01	1.8141E 00	-3.3437E-01	
-2.8663E 00	-2.9261E-02	1.1966E 00	1.2483E-02	1.5584E-01	6.5422E-02	-3.1052E-01	-1.4407E-01	1.3843E-01	1.1243E-01	
1.3094E-02	6.3152E-03	-1.9950E-02	-1.3083E-02	6.2079E-03	6.9325E-03	8.3521E-02	2.8801E-02	-1.6420E-01	-6.4170E-02	
7.3783E-02	5.2369E-02	1.0073E-02	1.5810E-03	-2.0545E-02	-4.1642E-03	9.8864E-03	4.8998E-03			

ROW =11

1.0163E 00	-4.2876E-02	-3.1727E 00	-2.5649E 00	1.3594E 00	2.7617E 00	-3.9969E 00	-6.8642E-02	8.7215E 00	5.1784E 00	
-3.3293E 00	-5.2429E 00	2.5491E 00	9.1385E-02	-5.4657E 00	-3.0109E 00	2.2073E 00	2.9856E 00	-8.1743E-01	-5.7937E-02	
1.6870E 00	9.0856E-01	-6.9317E-01	-8.5406E-01	-5.2348E-02	-5.3590E-03	1.0449E-01	1.5449E-02	-5.0154E-02	-2.1679E-02	
-1.3256E-02	2.4839E-03	2.6875E-02	-4.5455E-03	-1.4262E-02	-8.9073E-04	-3.4517E-02	2.0806E-03	6.8566E-02	-1.1697E-03	
-3.4055E-02	-7.8825E-03	-3.6079E-03	1.1550E-03	7.1911E-03	-1.8144E-03	-3.7035E-03	-3.9284E-05			

ROW =12

1.8546E 00	-6.7302E-01	-5.3695E 00	-8.3089E-01	3.4056E 00	1.5153E 00	-7.1817E 00	2.0810E 00	1.4954E 01	9.5458E-01	
-7.3994E 00	-2.7891E 00	4.4804E 00	-1.1369E 00	-9.1433E 00	-5.3659E-01	4.5062E 00	1.5021E 00	-1.4133E 00	2.6118E-01	
2.7683E 00	3.1602E-01	-1.3000E 00	-4.9778E-01	-1.1662E-01	-5.9988E-03	2.3601E-01	2.1945E-02	-1.1622E-01	-4.1793E-02	
-1.0821E-02	5.1266E-03	1.8313E-02	-9.84[illegible]E-03	-9.0170E-03	4.0158E-03	-6.0761E-02	6.7970E-03	1.2179E-01	-8.3683E-03	
-6.1632E-02	-1.1117E-02	-6.5526E-03	2.084[illegible]E-03	1.3663E-02	-3.3806E-03	-7.3180E-03	-2.5449E-04			

ROW =13

1.7857E-01	4.4691E-01	-1.0520E 00	1.8833E 00	2.3132E 00	-1.3544E 00	-1.0367E 00	-1.4173E 00	3.3656E 00	-5.7398E-01	
-3.9522E 00	5.2294E-01	8.4141E-01	-1.9336E-01	-2.6532E 00	1.9051E 00	2.5945E 00	-1.1180E 00	-3.0552E-01	1.4919E-01	
9.[illegible]060E-01	-5.4716E-01	-[illegible].0200E-01	2.4275E-01	-7.0346E-01	-2.4985E-01	3.5532E 00	4.2461E-01	-2.6370E 00	1.3066E 00	
-3.7426E-01	6.6749E-01	-[illegible].2247E 00	-1.1693E 00	2.2287E 00	1.7897E 00	-2.7489E-01	-1.7743E-01	2.2635E 00	2.8597E-01	
-1.8[illegible]5E 00	-9.5809E-01	-[illegible].2510E-02	8.9459E-02	-2.6651E-01	-1.5631E-01	2.8776E-01	2.4050E-01			

ROW =14

-1.5773E-01	3.9393E-01	[illegible].627E 00	-1.8001E-01	-2.4000E-01	-3.8944E-01	1.1982E-01	-1.6001E 00	-6.1914E-01	1.6420E 00	

-1.1131E-01	-4.6001E-01	-1.1358E-02	4.4783E-01	1.7055E-01	-1.2623E-01	1.6513E-01	-2.0709E-01	-3.4354E-02	-2.9495E-02
1.2098E-01	-1.0143E-02	-1.1569E-01	4.8450E-03	-1.7572E 00	-2.1752E 00	3.1172E 00	4.3031E 00	-9.8920E-01	-2.3906E 00
1.4549E 00	2.7322E 00	-2.4610E 00	-5.3569E 00	5.3850E-01	2.8180E 00	-1.2195E 00	-1.6138E 00	2.1495E 00	3.1841E 00
-6.5610E-01	-1.7501E 00	1.8842E-01	3.7423E-01	-3.1521E-01	-7.3303E-01	6.2806E-02	3.8289E-01		

ROW =15

2.7330E-01	1.0459E-02	3.5430E-01	-8.2326E-01	-7.3511E-01	2.5575E-01	-2.4883E-01	1.0812E 00	2.3778E-01	-2.0249E-01
7.4877E-01	-2.6350E-01	-8.2678E-02	3.0534E-02	7.6065E-01	-4.4822E-01	-8.1087E-01	1.1825E-01	7.0002E-02	-6.2878E-02
-2.4713E-01	2.2729E-01	2.2602E-01	-1.2034E-01	-4.0709E 00	-1.9686E 00	5.6896E 00	4.2544E 00	-1.3865E 00	-2.0883E 00
4.9120E 00	2.4273E 00	-6.5087E 00	-5.2361E 00	1.3404E 00	2.4114E 00	-3.1180E 00	-1.4743E 00	4.3025E 00	3.1897E 00
-1.0201E 00	-1.5307E 00	6.7209E-01	3.4352E-01	-8.8593E-01	-7.3752E-01	1.7753E-01	3.3802E-01		

ROW =16

9.7333E-02	2.2462E-01	-3.4806E-01	9.8626E-01	1.0235E 00	-8.1356E-01	-5.3085E-01	-7.8687E-01	1.6966E 00	-7.8859E-02
-1.9509E 00	1.2056E-01	6.3154E-01	-2.4563E-01	-1.8733E 00	1.5485E 00	1.8112E 00	-9.4112E-01	-2.2785E-01	1.1302E-01
7.1469E-01	-3.7432E-01	-5.7453E-01	1.5288E-01	-5.1547E-01	-1.2525E-02	2.1073E 00	1.4884E-03	-1.5074E 00	-5.8790E-01
-3.3845E-01	3.4188E-01	-8.1802E-01	-5.9718E-01	9.6673E-01	8.7055E-01	-3.7102E-01	-1.0411E-01	1.9143E 00	1.6667E-01
-1.4341E 00	-6.7715E-01	-7.0655E-02	6.4402E-02	-1.4852E-01	-1.1216E-01	1.8261E-01	1.6589E-01		

ROW =17

-7.1194E-02	4.5570E-01	7.1933E-01	-4.5889E-02	-1.6659E-01	-2.8609E-01	6.9566E-02	-8.2534E-01	-3.3685E-01	8.9457E-01
-2.3274E-02	-2.7791E-01	4.5835E-02	2.0888E-01	-8.0743E-03	7.3301E-02	1.8542E-01	-2.1861E-01	-2.8477E-02	-1.1571E-02
9.5949E-02	-1.0039E-02	-8.2646E-02	-8.7813E-04	-1.0011E 00	-1.0673E 00	1.7993E 00	2.1194E 00	-6.1683E-01	-1.2069E 00
6.2004E-01	1.3098E 00	-1.0313E 00	-2.5632E 00	1.8675E-01	1.3325E 00	-9.6720E-01	-1.1717E 00	1.7183E 00	2.3172E 00
-5.5246E-01	-1.2906E 00	1.1902E-01	2.5699E-01	-1.9619E-01	-5.0269E-01	3.3244E-02	2.6027E-01		

ROW =18

1.4426E-01	1.2606E-02	2.0605E-01	-3.8248E-01	-3.7128E-01	7.9246E-02	-1.0312E-01	5.5329E-01	6.6641E-02	-1.0847E-01
4.1748E-01	-1.2534E-01	-6.5067E-02	-2.0404E-03	4.6562E-01	-2.3948E-01	-4.8971E-01	6.3434E-02	5.8709E-02	-5.2135E-02
-1.9668E-01	1.6883E-01	1.7141E-01	-8.5746E-02	-2.1141E 00	-9.9160E-01	2.9954E 00	2.1469E 00	-7.6393E-01	-1.0703E 00
2.3791E 00	1.1575E 00	-3.1041E 00	-2.5002E 00	6.0937E-01	1.1281E 00	-2.2351E 00	-1.0783E 00	3.1327E 00	2.3284E 00
-7.7085E-01	-1.1459E 00	4.6326E-01	2.3567E-01	-6.0539E-01	-5.0624E-01	1.1781E-01	2.2957E-01		

ROW =19

5.0983E-03	-1.1922E-02	4.5605E-01	3.4232E-02	-3.9528E-01	-2.6150E-01	8.2738E-02	8.5741E-02	-2.8159E-01	2.8846E-01
4.1814E-01	-2.3693E-01	1.4297E-01	-1.8990E-01	-2.4336E-01	7.0569E-01	2.9467E-01	-5.3635E-01	4.2728E-02	-5.2663E-02
-1.3337E-01	1.7884E-01	1.2743E-01	-1.0820E-01	-3.2841E-01	2.1896E-01	5.0891E-01	-4.0568E-01	-2.3626E-01	1.9017E-01
-1.6544E-01	-3.7669E-02	6.5306E-01	6.4867E-02	-4.5678E-01	-2.1007E-01	-4.2502E-01	5.1873E-02	1.0546E 00	-9.6670E-02
-6.2824E-01	-1.3786E-01	-5.5997E-02	-5.1731E-03	1.7932E-01	8.9204E-03	-1.1765E-01	-4.6493E-02		

ROW =20

2.8456E-02	-3.1318E-02	9.7848E-02	1.1288E-01	-6.5034E-02	-1.7461E-01	4.6570E-03	1.2507E-01	3.3422E-02	-6.2725E-02
4.5943E-02	-2.7200E-02	6.0363E-02	-6.0682E-02	-7.8910E-02	2.4620E-01	9.6039E-02	-2.0155E-01	9.4359E-03	-1.1781E-02
-2.8394E-02	4.6447E-02	2.9913E-02	-3.0584E-02	-1.4921E-01	1.5596E-01	3.0987E-01	-2.9251E-01	-1.8850E-01	1.0461E-01
-3.0778E-01	-3.5723E-01	5.4870E-01	7.0764E-01	-1.8022E-01	-3.9691E-01	-4.3225E-01	-3.1177E-01	7.9379E-01	6.2739E-01
-3.0940E-01	-3.8536E-01	-8.1635E-02	-8.4609E-02	1.4631E-01	1.6814E-01	-5.0382E-02	-9.5888E-02		

ROW =21

2.1094E-03	2.7608E-04	-4.2907E-02	7.0630E-02	7.2861E-02	-4.2706E-02	5.5442E-02	-1.8012E-01	-1.3437E-01	1.2313E-01
-5.4993E-03	-2.5858E-03	1.0830E-02	-2.2646E-02	-5.0574E-02	2.3049E-02	3.0946E-02	5.6664E-03	-2.8181E-03	8.7843E-04
9.5123E-03	-1.3771E-02	-1.1878E-02	1.0292E-02	1.2018E-01	8.5450E-02	-8.3595E-02	-1.8216E-01	-4.2024E-02	5.3432E-02
-6.4401E-01	-3.3122E-01	9.1404E-01	7.1164E-01	-2.2806E-01	-3.5603E-01	-5.8358E-01	-3.2240E-01	9.0742E-01	6.8666E-01
-2.7446E-01	-3.7856E-01	-1.4970E-01	-8.2816E-02	2.1903E-01	1.7645E-01	-5.7943E-02	-9.1120E-02		

ROW =22

-1.4971E-01	-3.3313E-01	2.1942E 00	-1.1568E 00	-2.8342E 00	1.0809E-01	1.4891E 00	2.0342E 00	-4.6395E 00	8.7324E-01
5.5259E 00	-8.8569E-01	-1.4620E 00	4.2583E-01	5.0192E 00	-2.2506E 00	-4.3321E 00	7.5710E-01	5.2841E-01	-3.1825E-01
-1.6434E 00	1.0566E 00	1.3536E 00	-4.9690E-01	-4.5688E-01	5.7964E-01	-1.4181E 00	-1.0177E 00	1.5736E 00	1.4150E 00
3.3445E-01	-8.2883E-01	3.6440E 00	1.4351E 00	-3.4690E 00	-2.5147E 00	-3.3233E-01	5.8629E-01	-1.7975E 00	-1.0261E 00
1.8196E 00	1.5032E 00	6.0601E-02	-1.1313E-01	5.9792E-01	1.9173E-01	-5.7775E-01	-3.9489E-01		

```
ROW =23
 2.2106E-01 -8.0338E-01 -8.5549E-01  5.2321E-01  1.4384E-01 -1.8912E-01 -6.9677E-02  2.0586E 00  7.1144E-01 -2.0528E 00
 2.0426E-01  5.0656E-01 -6.9858E-02 -4.3042E-01  3.7710E-01  2.9247E-01 -5.1211E-01 -1.1207E-01  6.5240E-02 -2.2074E-03
-2.0952E-01  1.0733E-01  1.9236E-01 -6.1027E-02  1.0829E 00  2.1325E 00 -1.8180E 00 -4.1789E 00  3.6955E-01  2.1871E 00
-2.2537E 00 -3.9295E 00  3.8527E 00  7.7132E 00 -9.2740E-01 -4.0917E 00  1.2467E 00  2.2909E 00 -2.1150E 00 -4.4919E 00
 4.7698E-01  2.3679E 00 -3.7839E-01 -6.4956E-01  6.4562E-01  1.2751E 00 -1.5660E-01 -6.7641E-01

ROW =24
-2.0565E-01 -8.0686E-02 -8.5198E-01  6.7013E-01  1.0143E 00  6.1760E-02  3.5461E-01 -2.0140E 00 -6.3374E-01  9.6288E-01
-8.9375E-01  1.5547E-01  2.9029E-01 -9.0094E-02 -1.4694E 00  5.8700E-01  1.3430E 00 -6.3421E-02 -1.3450E-01  1.0617E-01
 4.3884E-01 -3.7315E-01 -3.8662E-01  1.9724E-01  3.9618E 00  1.7857E 00 -5.3278E 00 -3.8842E 00  1.1870E 00  1.8085E 00
-7.1850E 00 -3.5404E 00  9.5566E 00  7.6371E 00 -1.9965E 00 -3.5318E 00  4.2137E 00  1.9569E 00 -5.6791E 00 -4.2444E 00
 1.2621E 00  1.9863E 00 -1.2013E 00 -6.1491E-01  1.5998E 00  1.3195E 00 -3.3212E-01 -6.1197E-01
```

```
SAMPLE PROBLEM TYPICAL MISSILE
     FLUTTER ANALYSIS BY A COLLOCATION METHOD USING AERODYNAMIC INFLUENCE COEFFICIENTS

NSUR =     1  NAERO =     1  NRIGID =  2  NFUS =  0  NDENS =     1  MODES OUT =  6 NDELM =  1 NPUNCH =  0

                        B (REF) =        0.13330000E 01      K =        0.10000000E 01

                          SURFACE                  B                    S          EXTERNAL STORES SIZE

                             1           0.13300000E 01           0.33330000E 01           0

                                  RIGID COMPONENT MASS MATRIX
            COLUMN    1       COLUMN    2       COLUMN
     1   0.10000000E-09   0.
     2   0.               0.10000000E-09
```

MASS MATRIX

SURFACE 1, 34 CONTROL POINTS

	COLUMN 1	COLUMN 2	COLUMN 3	COLUMN 4	COLUMN 5	COLUMN 6
1	0.25000000E 02	0.	0.	0.	0.	0.
2	0.	0.25000000E 02	0.	0.	0.	0.
3	0.	0.	0.50000000E 02	0.	0.	0.
4	0.	0.	0.	0.50000000E 02	0.	0.
5	0.	0.	0.	0.	0.50000000E 02	0.
6	0.	0.	0.	0.	0.	0.50000000E 02
7	0.	0.	0.	0.	0.	0.
8	0.	0.	0.	0.	0.	0.
9	0.	0.	0.	0.	0.	0.
10	0.	0.	0.	0.	0.	0.
11	0.	0.	0.	0.	0.	0.
12	0.	0.	0.	0.	0.	0.
13	0.	0.	0.	0.	0.	0.
14	0.	0.	0.	0.	0.	0.
15	0.	0.	0.	0.	0.	0.
16	0.	0.	0.	0.	0.	0.
17	0.	0.	0.	0.	0.	0.
18	0.	0.	0.	0.	0.	0.
19	0.	0.	0.	0.	0.	0.
20	0.	0.	0.	0.	0.	0.
21	0.	0.	0.	0.	0.	0.
22	0.	0.	0.	0.	0.	0.
23	0.	0.	0.	0.	0.	0.
24	0.	0.	0.	0.	0.	0.
25	0.	0.	0.	0.	0.	0.
26	0.	0.	0.	0.	0.	0.
27	0.	0.	0.	0.	0.	0.
28	0.	0.	0.	0.	0.	0.
29	0.	0.	0.	0.	0.	0.
30	0.	0.	0.	0.	0.	0.
31	0.	0.	0.	0.	0.	0.
32	0.	0.	0.	0.	0.	0.
33	0.	0.	0.	0.	0.	0.
34	0.	0.	0.	0.	0.	0.

	COLUMN 7	COLUMN 8	COLUMN 9	COLUMN 10	COLUMN 11	COLUMN 12
1	0.	0.	0.	0.	0.	0.
2	0.	0.	0.	0.	0.	0.
3	0.	0.	0.	0.	0.	0.
4	0.	0.	0.	0.	0.	0.
5	0.	0.	0.	0.	0.	0.
6	0.	0.	0.	0.	0.	0.
7	0.75000000E 02	0.	0.	0.	0.	0.
8	0.	0.75000000E 02	0.	0.	0.	0.
9	0.	0.	0.75000000E 02	0.	0.	0.
10	0.	0.	0.	0.25000000E 02	0.	0.
11	0.	0.	0.	0.	0.33300000E 00	0.
12	0.	0.	0.	0.	0.	0.33300000E 00
13	0.	0.	0.	0.	0.	0.
14	0.	0.	0.	0.	0.	0.
15	0.	0.	0.	0.	0.	0.
16	0.	0.	0.	0.	0.	0.
17	0.	0.	0.	0.	0.	0.
18	0.	0.	0.	0.	0.	0.
19	0.	0.	0.	0.	0.	0.

	COLUMN 13	COLUMN 14	COLUMN 15	COLUMN 16	COLUMN 17	COLUMN 18
20	0.	0.	0.	0.	0.	0.
21	0.	0.	0.	0.	0.	0.
22	0.	0.	0.	0.	0.	0.
23	0.	0.	0.	0.	0.	0.
24	0.	0.	0.	0.	0.	0.
25	0.	0.	0.	0.	0.	0.
26	0.	0.	0.	0.	0.	0.
27	0.	0.	0.	0.	0.	0.
28	0.	0.	0.	0.	0.	0.
29	0.	0.	0.	0.	0.	0.
30	0.	0.	0.	0.	0.	0.
31	0.	0.	0.	0.	0.	0.
32	0.	0.	0.	0.	0.	0.
33	0.	0.	0.	0.	0.	0.
34	0.	0.	0.	0.	0.	0.

	COLUMN 19	COLUMN 20	COLUMN 21	COLUMN 22	COLUMN 23	COLUMN 24
1	0.	0.	0.	0.	0.	0.
2	0.	0.	0.	0.	0.	0.
3	0.	0.	0.	0.	0.	0.
4	0.	0.	0.	0.	0.	0.
5	0.	0.	0.	0.	0.	0.
6	0.	0.	0.	0.	0.	0.
7	0.	0.	0.	0.	0.	0.
8	0.	0.	0.	0.	0.	0.
9	0.	0.	0.	0.	0.	0.
10	0.	0.	0.	0.	0.	0.
11	0.	0.	0.	0.	0.	0.
12	0.	0.	0.	0.	0.	0.
13	0.33300000E 00	0.	0.	0.	0.	0.
14	0.	0.28800000E 00	0.	0.	0.	0.
15	0.	0.	0.28800000E 00	0.	0.	0.
16	0.	0.	0.	0.28800000E 00	0.	0.
17	0.	0.	0.	0.	0.25500000E 00	0.
18	0.	0.	0.	0.	0.	0.25500000E 00
19	0.	0.	0.	0.	0.	0.
20	0.	0.	0.	0.	0.	0.
21	0.	0.	0.	0.	0.	0.
22	0.	0.	0.	0.	0.	0.
23	0.	0.	0.	0.	0.	0.
24	0.	0.	0.	0.	0.	0.
25	0.	0.	0.	0.	0.	0.
26	0.	0.	0.	0.	0.	0.
27	0.	0.	0.	0.	0.	0.
28	0.	0.	0.	0.	0.	0.
29	0.	0.	0.	0.	0.	0.
30	0.	0.	0.	0.	0.	0.
31	0.	0.	0.	0.	0.	0.
32	0.	0.	0.	0.	0.	0.
33	0.	0.	0.	0.	0.	0.
34	0.	0.	0.	0.	0.	0.

6	0.	0.	0.	0.	0.	0.
7	0.	0.	0.	0.	0.	0.
8	0.	0.	0.	0.	0.	0.
9	0.	0.	0.	0.	0.	0.
10	0.	0.	0.	0.	0.	0.
11	0.	0.	0.	0.	0.	0.
12	0.	0.	0.	0.	0.	0.
13	0.	0.	0.	0.	0.	0.
14	0.	0.	0.	0.	0.	0.
15	0.	0.	0.	0.	0.	0.
16	0.	0.	0.	0.	0.	0.
17	0.	0.	0.	0.	0.	0.
18	0.	0.	0.	0.	0.	0.
19	0.25500000E 00	0.	0.	0.	0.	0.
20	0.	0.22200000E 00	0.	0.	0.	0.
21	0.	0.	0.22200000E 00	0.	0.	0.
22	0.	0.	0.	0.22200000E 00	0.	0.
23	0.	0.	0.	0.	0.84000000E-01	0.
24	0.	0.	0.	0.	0.	0.12500000E 00
25	0.	0.	0.	0.	0.	0.
26	0.	0.	0.	0.	0.	0.
27	0.	0.	0.	0.	0.	0.
28	0.	0.	0.	0.	0.	0.
29	0.	0.	0.	0.	0.	0.
30	0.	0.	0.	0.	0.	0.
31	0.	0.	0.	0.	0.	0.
32	0.	0.	0.	0.	0.	0.
33	0.	0.	0.	0.	0.	0.
34	0.	0.	0.	0.	0.	0.
	COLUMN 25	COLUMN 26	COLUMN 27	COLUMN 28	COLUMN 29	COLUMN 30

1	0.	0.	0.	0.	0.	0.
2	0.	0.	0.	0.	0.	0.
3	0.	0.	0.	0.	0.	0.
4	0.	0.	0.	0.	0.	0.
5	0.	0.	0.	0.	0.	0.
6	0.	0.	0.	0.	0.	0.
7	0.	0.	0.	0.	0.	0.
8	0.	0.	0.	0.	0.	0.
9	0.	0.	0.	0.	0.	0.
10	0.	0.	0.	0.	0.	0.
11	0.	0.	0.	0.	0.	0.
12	0.	0.	0.	0.	0.	0.
13	0.	0.	0.	0.	0.	0.
14	0.	0.	0.	0.	0.	0.
15	0.	0.	0.	0.	0.	0.
16	0.	0.	0.	0.	0.	0.
17	0.	0.	0.	0.	0.	0.
18	0.	0.	0.	0.	0.	0.
19	0.	0.	0.	0.	0.	0.
20	0.	0.	0.	0.	0.	0.
21	0.	0.	0.	0.	0.	0.
22	0.	0.	0.	0.	0.	0.
23	0.	0.	0.	0.	0.	0.
24	0.	0.	0.	0.	0.	0.
25	0.41000000E-01	0.	0.	0.	0.	0.
26	0.	.41000000E-01	0.	0.	0.	0.
27	0.	0.	0.12500000E 00	0.	0.	0.
28	0.	0.	0.	0.41000000E-01	0.	0.
29	0.		0.	.	0.84000000E-01	0.

30	0.	0.	0.	0.	0.	0.12500000E 00
31	0.	0.	0.	0.	0.	0.
32	0.	0.	0.	0.	0.	0.
33	0.	0.	0.	0.	0.	0.
34	0.	0.	0.	0.	0.	0.

	COLUMN 31	COLUMN 32	COLUMN 33	COLUMN 34	COLUMN
1	0.	0.	0.	0.	
2	0.	0.	0.	0.	
3	0.	0.	0.	0.	
4	0.	0.	0.	0.	
5	0.	0.	0.	0.	
6	0.	0.	0.	0.	
7	0.	0.	0.	0.	
8	0.	0.	0.	0.	
9	0.	0.	0.	0.	
10	0.	0.	0.	0.	
11	0.	0.	0.	0.	
12	0.	0.	0.	0.	
13	0.	0.	0.	0.	
14	0.	0.	0.	0.	
15	0.	0.	0.	0.	
16	0.	0.	0.	0.	
17	0.	0.	0.	0.	
18	0.	0.	0.	0.	
19	0.	0.	0.	0.	
20	0.	0.	0.	0.	
21	0.	0.	0.	0.	
22	0.	0.	0.	0.	
23	0.	0.	0.	0.	
24	0.	0.	0.	0.	
25	0.	0.	0.	0.	
26	0.	0.	0.	0.	
27	0.	0.	0.	0.	
28	0.	0.	0.	0.	
29	0.	0.	0.	0.	
30	0.	0.	0.	0.	
31	0.41000000E-01	0.	0.	0.	
32	0.	0.84000000E-01	0.	0.	
33	0.	0.	0.12500000E 00	0.	
34	0.	0.	0.	0.41000000E-01	

RIGID BODY MODAL MATRIX
SURFACE 1, 34 CONTROL POINTS

	COLUMN 1	COLUMN 2	COLUMN
1	0.10000000E 01	0.	
2	0.10000000E 01	0.15000000E 02	
3	0.10000000E 01	0.25000000E 02	
4	0.10000000E 01	0.35000000E 02	
5	0.10000000E 01	0.45000000E 02	
6	0.10000000E 01	0.55000000E 02	
7	0.10000000E 01	0.65000000E 02	
8	0.10000000E 01	0.75000000E 02	
9	0.10000000E 01	0.85000000E 02	
10	0.10000000E 01	0.10000000E 03	
11	0.10000000E 01	0.46050000E 02	
12	0.10000000E 01	0.55625000E 02	
13	0.10000000E 01	0.65280000E 02	
14	0.10000000E 01	0.48130000E 02	
15	0.10000000E 01	0.56875000E 02	
16	0.10000000E 01	0.65625000E 02	
17	0.10000000E 01	0.50205000E 02	
18	0.10000000E 01	0.58125000E 02	
19	0.10000000E 01	0.60040000E 02	
20	0.10000000E 01	0.52290000E 02	
21	0.10000000E 01	0.59375000E 02	
22	0.10000000E 01	0.66455000E 02	
23	0.10000000E 01	0.81660000E 02	
24	0.10000000E 01	0.85000000E 02	
25	0.10000000E 01	0.91660000E 02	
26	0.10000000E 01	0.81660000E 02	
27	0.10000000E 01	0.85000000E 02	
28	0.10000000E 01	0.91660000E 02	
29	0.10000000E 01	0.81660000E 02	
30	0.10000000E 01	0.85000000E 02	
31	0.10000000E 01	0.91660000E 02	
32	0.10000000E 01	0.81660000E 02	
33	0.10000000E 01	0.85000000E 02	
34	0.10000000E 01	0.91660000E 02	

FLEXIBILITY MATRIX
SURFACE 1, 34 CONTROL POINTS

	COLUMN 1	COLUMN 2	COLUMN 3	COLUMN 4	COLUMN 5	COLUMN 6
1	0.83072800E-04	0.43437700E-04	0.21776100E-04	0.72571800E-05	0.	-0.16051300E-05
2	0.43437700E-04	0.25228400E-04	0.13565100E-04	0.47587800E-05	0.	-0.10700900E-05
3	0.21776100E-04	0.13565100E-04	0.80910499E-05	0.30931700E-05	0.	-0.71339600E-06
4	0.72571800E-05	0.47587800E-05	0.30931700E-05	0.14275400E-05	0.	-0.35669900E-06
5	0.	0.	0.	0.	0.	0.
6	-0.16051300E-05	-0.10700900E-05	-0.71339600E-06	-0.35669900E-06	0.	0.23788200E-06
7	0.	0.	0.	0.	0.	0.
8	0.21394400E-05	0.14263000E-05	0.95087200E-06	0.47543800E-06	0.	-0.35673300E-06
9	0.42788800E-05	0.28526000E-05	0.19017400E-05	0.95087500E-06	0.	-0.71346400E-06
10	0.74880300E-05	0.49920400E-05	0.33280400E-05	0.16640300E-05	0.	-0.12485600E-05
11	-0.41524300E-06	-0.27683000E-06	-0.18455400E-06	-0.92277500E-07	0.	0.34715600E-07
12	-0.29350500E-06	-0.19567100E-06	-0.13044800E-06	-0.65224300E-07	0.	0.25248900E-07
13	0.20011800E-07	0.13341300E-07	0.88942200E-08	0.44471300E-08	0.	-0.54193700E-08
14	-0.11099600E-05	-0.73997800E-06	-0.49332100E-06	-0.24666100E-06	0.	0.92011700E-07
15	-0.59161100E-06	-0.39440900E-06	-0.26294000E-06	-0.13147100E-06	0.	0.44196600E-07
16	-0.41861100E-07	-0.27907600E-07	-0.18605100E-07	-0.93026000E-08	0.	-0.70910100E-08
17	-0.16806200E-05	-0.11204200E-05	-0.74695000E-06	-0.37347700E-06	0.	0.13739600E-06
18	-0.92676000E-06	-0.61784300E-06	-0.41189700E-06	-0.20594900E-06	0.	0.67301800E-07
19	-0.17889700E-06	-0.11926500E-06	-0.79510700E-07	-0.39755500E-07	0.	-0.21219000E-08
20	-0.21875000E-05	-0.14583400E-05	-0.97223200E-06	-0.48611800E-06	0.	0.17670900E-06
21	-0.12731000E-05	-0.84873900E-06	-0.56582900E-06	-0.28291600E-06	0.	0.91699700E-07
22	-0.35927000E-06	-0.23951400E-06	-0.15967700E-06	-0.79838700E-07	0.	0.67598700E-08
23	0.35643800E-05	0.23762600E-05	0.15841800E-05	0.79209400E-06	0.	-0.59432700E-06
24	0.42789500E-05	0.28526500E-05	0.19017700E-05	0.95089100E-06	0.	-0.71347600E-06
25	0.57038000E-05	0.38025500E-05	0.25350500E-05	0.12675300E-05	0.	-0.95105700E-06
26	0.35650900E-05	0.23767400E-05	0.15845000E-05	0.79225300E-06	0.	-0.59444500E-06
27	0.42796700E-05	0.28531300E-05	0.19020900E-05	0.95105200E-06	0.	-0.71359500E-06
28	0.57046200E-05	0.38031000E-05	0.25354100E-05	0.12677100E-05	0.	-0.95119100E-06
29	0.35660800E-05	0.23774000E-05	0.15849400E-05	0.79247300E-06	0.	-0.59460900E-06
30	0.42806800E-05	0.28538000E-05	0.19025400E-05	0.95127500E-06	0.	-0.71376200E-06
31	0.57055900E-05	0.38037400E-05	0.25358400E-05	0.12679300E-05	0.	-0.95135200E-06
32	0.35671800E-05	0.23781300E-05	0.15854300E-05	0.79271800E-06	0.	-0.59479100E-06
33	0.42817600E-05	0.28545200E-05	0.19030200E-05	0.95151500E-06	0.	-0.71394000E-06
34	0.57066300E-05	0.38044400E-05	0.25363000E-05	0.12681600E-05	0.	-0.95152400E-06

	COLUMN 7	COLUMN 8	COLUMN 9	COLUMN 10	COLUMN 11	COLUMN 12
1	0.	0.21394400E-05	0.42788800E-05	0.74880300E-05	-0.41524300E-06	-0.29350500E-06
2	0.	0.14263000E-05	0.28526000E-05	0.49920400E-05	-0.27683000E-06	-0.19567100E-06
3	0.	0.95087200E-06	0.19017400E-05	0.33280400E-05	-0.18455400E-06	-0.13044800E-06
4	0.	0.47543800E-06	0.95087500E-06	0.16640300E-05	-0.92277500E-07	-0.65224300E-07
5	0.	0.	0.	0.	0.	0.
6	0.	-0.35673300E-06	-0.71346400E-06	-0.12485600E-05	0.34715600E-07	0.25248900E-07
7	0.	0.	0.	0.	0.	0.
8	0.	0.14276800E-05	0.30934500E-05	0.55921000E-05	-0.46584400E-07	-0.35771000E-07
9	0.	0.30934500E-05	0.76154600E-05	0.14755600E-04	-0.93168700E-07	-0.71542000E-07
10	0.	0.55921000E-05	0.14755600E-04	0.33679400E-04	-0.16304500E-06	-0.12519800E-06
11	0.	-0.46584400E-07	-0.93168700E-07	-0.16304500E-06	0.38916200E-05	0.21341600E-05
12	0.	-0.35771000E-07	-0.71542000E-07	-0.12519800E-06	0.21341600E-05	0.13710700E-04
13	0.	0.17230300E-07	0.34460600E-07	0.60306100E-07	0.26835300E-06	0.19516700E-05
14	0.	-0.12138400E-06	-0.24276800E-06	-0.42484400E-06	0.14386600E-04	0.79185600E-05
15	0.	-0.45315100E-07	-0.90630000E-07	-0.15860200E-06	0.82793900E-05	0.94396100E-05
16	0.	0.37666700E-07	0.75333400E-07	0.13183300E-06	0.21477700E-05	0.73152300E-05
17	0.	-0.17610400E-06	-0.35220700E-06	-0.61636200E-06	0.23509100E-04	0.10977300E-04
18	0.	-0.63256800E-07	-0.12651300E-06	-0.22139800E-06	0.14397500E-04	0.10204800E-04

19	0.	0.48243400E-07	0.96486700E-07	0.16885200E-06	0.52836900E-05	0.10250600E-04
20	0.	-0.22071300E-06	-0.44142600E-06	-0.77249500E-06	0.31875900E-04	0.13114000E-04
21	0.	-0.83881600E-07	-0.16776300E-06	-0.29358500E-06	0.20484000E-04	0.12684300E-04
22	0.	0.52799800E-07	0.10560000E-06	0.18479900E-06	0.90873700E-05	0.12362200E-04
23	0.	0.25371300E-05	0.60257100E-05	0.11257900E-04	-0.77611000E-07	-0.59599600E-07
24	0.	0.30935000E-05	0.76155900E-05	0.14755900E-04	-0.93170200E-07	-0.71543200E-07
25	0.	0.42029000E-05	0.10785800E-04	0.21730900E-04	-0.12419500E-06	-0.95366400E-07
26	0.	0.25376500E-05	0.60269800E-05	0.11260300E-04	-0.77626400E-07	-0.59607500E-07
27	0.	0.30940200E-05	0.76168800E-05	0.14758400E-04	-0.93185800E-07	-0.71555100E-07
28	0.	0.42034900E-05	0.10787300E-04	0.21733700E-04	-0.12421300E-06	-0.95379800E-07
29	0.	0.25383700E-05	0.60287400E-05	0.11263700E-04	-0.77647800E-07	-0.59623900E-07
30	0.	0.30947500E-05	0.76186700E-05	0.14761800E-04	-0.93207500E-07	-0.71571800E-07
31	0.	0.42041900E-05	0.10789000E-04	0.21737100E-04	-0.12423400E-06	-0.95395900E-07
32	0.	0.25391600E-05	0.60306900E-05	0.11267500E-04	-0.77671600E-07	-0.59642100E-07
33	0.	0.30955300E-05	0.76205800E-05	0.14765500E-04	-0.93230800E-07	-0.71589700E-07
34	0.	0.42049400E-05	0.10790800E-04	0.21740700E-04	-0.12425600E-06	-0.95413200E-07
	COLUMN 13	COLUMN 14	COLUMN 15	COLUMN 16	COLUMN 17	COLUMN 18

1	0.20011800E-07	-0.11099600E-05	-0.59161100E-06	-0.41861100E-07	-0.16806200E-05	-0.92676000E-06
2	0.13341300E-07	-0.73997800E-06	-0.39440900E-06	-0.27907600E-07	-0.11204200E-05	-0.61784300E-06
3	0.88942200E-08	-0.49332100E-06	-0.26294000E-06	-0.18605100E-07	-0.74695000E-06	-0.41189700E-06
4	0.44471300E-08	-0.24666100E-06	-0.13147100E-06	-0.93026000E-08	-0.37347700E-06	-0.20594900E-06
5	0.	0.	0.	0.	0.	0.
6	-0.54193700E-08	0.92011700E-07	0.44196600E-07	-0.70910100E-08	0.13739600E-06	0.67301800E-07
7	0.	0.	0.	0.	0.	0.
8	0.17230300E-07	-0.12138400E-06	-0.45315100E-07	0.37666700E-07	-0.17610400E-06	-0.63256800E-07
9	0.34460600E-07	-0.24276800E-06	-0.90630000E-07	0.75333400E-07	-0.35220700E-06	-0.12651300E-06
10	0.60306100E-07	-0.42484400E-06	-0.15860200E-06	0.13183300E-06	-0.61636200E-06	-0.22139800E-06
11	0.26835300E-06	0.14386600E-04	0.82793900E-05	0.21477700E-05	0.23509100E-04	0.14397500E-04
12	0.19516700E-05	0.79185600E-05	0.94396100E-05	0.73152300E-05	0.10977300E-04	0.10204800E-04
13	0.36776200E-05	0.21696100E-05	0.79269900E-05	0.13697800E-04	0.53574800E-05	0.13940800E-04
14	0.21696100E-05	0.92694700E-04	0.56012200E-04	0.17311800E-04	0.17367900E-03	0.10745900E-03
15	0.79269900E-05	0.56012200E-04	0.62750200E-04	0.53786400E-04	0.11335200E-03	0.11294700E-03
16	0.13697800E-04	0.17311800E-04	0.53786400E-04	0.88655400E-04	0.42016700E-04	0.10416400E-03
17	0.53574800E-05	0.17367900E-03	0.11335200E-03	0.42016700E-04	0.37984000E-03	0.23767400E-03
18	0.13940800E-04	0.10745900E-03	0.11294700E-03	0.10416400E-03	0.23767400E-03	0.23883800E-03
19	0.22528200E-04	0.41822800E-04	0.10932900E-03	0.16698900E-03	0.97485600E-04	0.23092600E-03
20	0.92552700E-05	0.24743700E-03	0.16894900E-03	0.72556100E-04	0.57875800E-03	0.37354900E-03
21	0.19988800E-04	0.15961600E-03	0.16600400E-03	0.15582100E-03	0.37131300E-03	0.36895500E-03
22	0.30727100E-04	0.71792400E-04	0.16365000E-03	0.23918500E-03	0.16460000E-03	0.36384500E-03
23	0.28706300E-07	-0.20223000E-06	-0.75496200E-07	0.62753900E-07	-0.29339400E-06	-0.10538800E-06
24	0.34461200E-07	-0.24277200E-06	-0.90631500E-07	0.75334600E-07	-0.35221300E-06	-0.12651500E-06
25	0.45936500E-07	-0.32361300E-06	-0.12081100E-06	0.10042000E-06	-0.46949700E-06	-0.16864400E-06
26	0.28712100E-07	-0.20227000E-06	-0.75510900E-07	0.62766800E-07	-0.29345200E-06	-0.10540800E-06
27	0.34467100E-07	-0.24281200E-06	-0.90646300E-07	0.75347600E-07	-0.35227100E-06	-0.12653600E-06
28	0.45943100E-07	-0.32365800E-06	-0.12082800E-06	0.10043500E-06	-0.46956200E-06	-0.16866700E-06
29	0.28720100E-07	-0.20232500E-06	-0.75531400E-07	0.62784600E-07	-0.29353200E-06	-0.10543600E-06
30	0.34475200E-07	-0.24286900E-06	-0.90667100E-07	0.75365700E-07	-0.35235300E-06	-0.12656500E-06
31	0.45950900E-07	-0.32371300E-06	-0.12084800E-06	0.10045200E-06	-0.46964100E-06	-0.16869500E-06
32	0.28729000E-07	-0.20238700E-06	-0.75554100E-07	0.62804300E-07	-0.29362100E-06	-0.10546800E-06
33	0.34484000E-07	-0.24292900E-06	-0.90689400E-07	0.75385000E-07	-0.35244000E-06	-0.12659500E-06
34	0.45959400E-07	-0.32377100E-06	-0.12086900E-06	0.10047100E-06	-0.46972500E-06	-0.16072500E-06
	COLUMN 19	COLUMN 20	COLUMN 21	COLUMN 22	COLUMN 23	COLUMN 24

1	-0.17889700E-06	-0.[illegible]9750000E-05	-0.12731900E-05	-0.35927600E-06	0.35643800E-05	0.42789500E-05
2	-0.11926500E-06	-0.[illegible]58340[illegible]E-05	-0.84873900E-06	-0.23951400E-06	0.23762600E-05	0.28526500E-05
3	-0.79510700E-07	-0.[illegible]2326[illegible]E-06	-0.56582900E-06	-0.15967700E-06	0.15841800E-05	0.19017700E-05
4	-0.39755500E-07	-0.[illegible]8611800E-06	-0.28291600E-06	-0.79838700E-07	0.79209400E-06	0.95089100E-06
5	0.		0.	0.	0.	0.

6	-0.21219000E-08	0.17670900E-06	0.91699700E-07	0.67598700E-08	-0.59432700E-06	-0.71347600E-06
7	0.	0.	0.	0.	0.	0.
8	0.48243400E-07	-0.22071360E-06	-0.83881600E-07	0.52799800E-07	0.25371300E-05	0.30935000E-05
9	0.96486700E-07	-0.44142600E-06	-0.16776300E-06	0.10560000E-06	0.60257100E-05	0.76155900E-05
10	0.16885200E-06	-0.77249500E-06	-0.29358500E-06	0.18479900E-06	0.11257900E-04	0.14755900E-04
11	0.52836900E-05	0.31875900E-04	0.20484000E-04	0.90873700E-05	-0.77611000E-07	-0.93170200E-07
12	0.10250600E-04	0.13114000E-04	0.12684300E-04	0.12362200E-04	-0.59595600E-07	-0.71543200E-07
13	0.22528200E-04	0.92552700E-05	0.19988800E-04	0.30727100E-04	0.28706300E-07	0.34461200E-07
14	0.41822800E-04	0.24743700E-03	0.15961600E-03	0.71792400E-04	-0.20223000E-06	-0.24277200E-06
15	0.10932900E-03	0.16894900E-03	0.16600400E-03	0.16365000E-03	-0.75496200E-07	-0.90631500E-07
16	0.16698900E-03	0.72556100E-04	0.15582100E-03	0.23918500E-03	0.62753900E-07	0.75334600E-07
17	0.97482600E-04	0.57875800E-03	0.37131300E-03	0.16460000E-03	-0.29339400E-06	-0.35221300E-06
18	0.23[illegible]1600E-03	0.37354900E-03	0.36895500E-03	0.36385500E-03	-0.10538800E-06	-0.12651500E-06
19	0.366[illegible]3900E-03	0.16575200E-03	0.36308500E-03	0.56146700E-03	0.80375000E-07	0.96488400E-07
20	0.165[illegible]5200E-03	0.95566800E-03	0.61266300E-03	0.27337400E-03	-0.36771500E-06	-0.44143300E-06
21	0.36[illegible]85500E-03	0.61266300E-03	0.60940200E-03	0.59980400E-03	-0.13974900E-06	-0.16776600E-06
22	0.56146700E-03	0.27337400E-03	0.59980400E-03	0.93066800E-03	0.87966200E-07	0.10560100E-06
23	0.80375000E-07	-0.36771500E-06	-0.13974900E-06	0.87966200E-07	0.23743800E-04	0.11234700E-04
24	0.96488400E-07	-0.44143300E-06	-0.16776600E-06	0.10560100E-06	0.11234700E-04	0.12824700E-04
25	0.12861800E-06	-0.58842700E-06	-0.22363000E-06	0.14076600E-06	-0.46898500E-05	0.15994700E-04
26	0.80391800E-07	-0.36778700E-06	-0.13977600E-06	0.87984800E-07	0.36326300E-04	0.26867500E-04
27	0.96505300E-07	-0.44150600E-06	-0.16779300E-06	0.10562000E-06	0.26560300E-04	0.28457500E-04
28	0.12863700E-06	-0.58850900E-06	-0.22366100E-06	0.14078700E-06	0.75275200E-05	0.31628500E-04
29	0.80414800E-07	-0.36788700E-06	-0.13981300E-06	0.88010400E-07	0.49935700E-04	0.42503600E-04
30	0.96528700E-07	-0.44160800E-06	-0.16783100E-06	0.10564600E-06	0.40146900E-04	0.44093600E-04
31	0.12866000E-06	-0.58860700E-06	-0.22369700E-06	0.14081200E-06	0.20464700E-04	0.47264000E-04
32	0.80440400E-07	-0.36799900E-06	-0.13985500E-06	0.88038700E-07	0.63574900E-04	0.58141000E-04
33	0.96553700E-07	-0.44171700E-06	-0.16787100E-06	0.10567400E-06	0.55546000E-04	0.59730700E-04
34	0.12868400E-06	-0.58871200E-06	-0.22373600E-06	0.14083900E-06	0.33562400E-04	0.62900500E-04
	COLUMN 25	COLUMN 26	COLUMN 27	COLUMN 28	COLUMN 29	COLUMN 30

1	0.57038000E-05	0.35650900E-05	0.42796700E-05	0.57046200E-05	0.35660800E-05	0.42806800E-05
2	0.38025500E-05	0.23767400E-05	0.28531300E-05	0.38031000E-05	0.23774000E-05	0.28538000E-05
3	0.25350500E-05	0.15845000E-05	0.19020900E-05	0.25354100E-05	0.15849400E-05	0.19025400E-05
4	0.12675300E-05	0.79225300E-06	0.95105200E-06	0.12677100E-05	0.79247300E-06	0.95127500E-06
5	0.	0.	0.	0.	0.	0.
6	-0.95105700E-06	-0.59444500E-06	-0.71359500E-06	-0.95119100E-06	-0.59460900E-06	-0.71376200E-06
7	0.	0.	0.	0.	0.	0.
8	0.42029000E-05	0.25376500E-05	0.30940200E-05	0.42034900E-05	0.25383700E-05	0.30947500E-05
9	0.10785800E-04	0.60269800E-05	0.76168800E-05	0.10787300E-04	0.60287400E-05	0.76186700E-05
10	0.21730900E-04	0.11260300E-04	0.14758400E-04	0.21733700E-04	0.11263700E-04	0.14761800E-04
11	-0.12419500E-06	-0.77626400E-07	-0.93185900E-07	-0.12421300E-06	-0.77647800E-07	-0.93207500E-07
12	-0.95366400E-07	-0.59607500E-07	-0.71555100E-07	-0.95379800E-07	-0.59623900E-07	-0.71571800E-07
13	0.45936500E-07	0.28712100E-07	0.34467100E-07	0.45943100E-07	0.28720100E-07	0.34475200E-07
14	-0.32361300E-06	-0.20227000E-06	-0.24281200E-06	-0.32365800E-06	-0.20232500E-06	-0.24286900E-06
15	-0.12081100E-06	-0.75510900E-07	-0.90646300E-07	-0.12082800E-06	-0.75531400E-07	-0.90667100E-07
16	0.10042000E-06	0.62766800E-07	0.75347600E-07	0.10045500E-06	0.62784600E-07	0.75365700E-07
17	-0.46949700E-06	-0.29345200E-06	-0.35227100E-06	-0.46956200E-06	-0.29353200E-06	-0.35235300E-06
18	-0.16864400E-06	-0.10540800E-06	-0.12653000E-06	-0.16866700E-06	-0.10543600E-06	-0.12656500E-06
19	0.12861800E-06	0.80391800E-07	0.96505300E-07	0.12863700E-06	0.80414800E-07	0.96528700E-07
20	-0.58842700E-06	-0.36778700E-06	-0.44150600E-06	-0.58850900E-06	-0.36788700E-06	-0.44160800E-06
21	-0.22363000E-06	-0.13977600E-06	-0.16779300E-06	-0.22366100E-06	-0.13981300E-06	-0.16783100E-06
22	0.14076600E-06	0.37984800E-07	0.10562000E-06	0.14078700E-06	0.88010400E-07	0.10564600E-06
23	-0.46898500E-05	0.36326300E-04	0.26560300E-04	0.75275200E-05	0.49935700E-04	0.40146900E-04
24	0.15994700E-04	0.26867500E-04	0.28457500E-04	0.31628500E-04	0.42503600E-04	0.44093600E-04
25	0.92992900E-04	-0.10918800E-05	0.30420400E-04	0.95104700E-04	0.65334300E-05	0.37983400E-04
26	-0.10918800E-05	0.34402700E-03	0.21467000E-03	-0.21967100E-04	0.62871400E-03	0.42585900E-03
27	0.30420400E-04	0.21467000E-03	0.21662200E-03	0.22524400E-03	0.42681300E-03	0.43011800E-03
28	0.95104700E-04	-0.21967100E-04	0.22524400E-03	0.73907900E-03	0.54321800E-04	0.46787600E-03

29	0.65334300E-05	0.62871400E-03	0.42681300E-03	0.54321800E-04	0.13289500E-02	0.95531800E-03
30	0.37983400E-04	0.42585900E-03	0.43011800E-03	0.46787600E-03	0.95531800E-03	0.96796600E-03
31	0.10005900E-03	0.19526600E-04	0.43344500E-03	0.12910000E-02	0.21259100E-03	0.97833700E-03
32	0.14282200E-04	0.88898800E-03	0.64006500E-03	0.18843300E-03	0.20101200E-02	0.15159900E-02
33	0.44782800E-04	0.62499200E-03	0.64099100E-03	0.71836900E-03	0.14888900E-02	0.15146300E-02
34	0.10565500E-03	0.97523500E-04	0.64319400E-03	0.17772800E-02	0.44760100E-03	0.15115000E-02

	COLUMN 31	COLUMN 32	COLUMN 33	COLUMN 34	COLUMN
1	0.57055900E-05	0.35671800E-05	0.42817600E-05	0.57066300E-05	
2	0.38037400E-05	0.23781300E-05	0.28545200E-05	0.38044400E-05	
3	0.25358400E-05	0.15854300E-05	0.19030200E-05	0.25363000E-05	
4	0.12679300E-05	0.79271800E-06	0.95151500E-06	0.12681600E-05	
5	0.	0.	0.	0.	
6	-0.95135200E-06	-0.59479100E-06	-0.71394000E-06	-0.95152400E-06	
7	0.	0.	0.	0.	
8	0.42041900E-05	0.25391600E-05	0.30955300E-05	0.42049400E-05	
9	0.10789000E-04	0.60306900E-05	0.76205800E-05	0.10790800E-04	
10	0.21737100E-04	0.11267500E-04	0.14765500E-04	0.21740700E-04	
11	-0.12423400E-06	-0.77671600E-07	-0.93230800E-07	-0.12425600E-06	
12	-0.95395900E-07	-0.59642100E-07	-0.71589700E-07	-0.95413200E-07	
13	0.45950900E-07	0.28729000E-07	0.34484000E-07	0.45959400E-07	
14	-0.32371300E-06	-0.20238700E-06	-0.24292900E-06	-0.32377100E-06	
15	-0.12084800E-06	-0.75554100E-07	-0.90689400E-07	-0.12086900E-06	
16	0.10045200E-06	0.62804300E-07	0.75385000E-07	0.10047100E-06	
17	-0.46964100E-06	-0.29362100E-06	-0.35244000E-06	-0.46972500E-06	
18	-0.16869500E-06	-0.10546800E-06	-0.12659500E-06	-0.16872500E-06	
19	0.12866000E-06	0.80440400E-07	0.96553700E-07	0.12868400E-06	
20	-0.58860700E-06	-0.36799900E-06	-0.44171700E-06	-0.58871200E-06	
21	-0.22369700E-06	-0.13985500E-06	-0.16787100E-06	-0.22373600E-06	
22	0.14081200E-06	0.88038700E-07	0.10567400E-06	0.14083900E-06	
23	0.20464700E-04	0.63574900E-04	0.53546000E-04	0.33562400E-04	
24	0.47264000E-04	0.58141000E-04	0.59730700E-04	0.62900500E-04	
25	0.10005900E-03	0.14282200E-04	0.44782800E-04	0.10565500E-03	
26	0.19526600E-04	0.88898800E-03	0.62499200E-03	0.97523500E-04	
27	0.43344500E-03	0.64006500E-03	0.64099100E-03	0.64319400E-03	
28	0.12910000E-02	0.18843300E-03	0.71836900E-03	0.17772800E-02	
29	0.21259100E-03	0.20101200E-02	0.14888900E-02	0.44760100E-03	
30	0.97833700E-03	0.15159900E-02	0.15146300E-02	0.15115000E-02	
31	0.25053800E-02	0.52507100E-03	0.15593300E-02	0.36269700E-02	
32	0.52507100E-03	0.32860300E-02	0.25097800E-02	0.96514300E-03	
33	0.15593300E-02	0.25097800E-02	0.25096800E-02	0.24979500E-02	
34	0.36269700E-02	0.96514300E-03	0.24979500E-02	0.55671200E-02	

WEIGHTING MATRIX
SURFACE 1. NO WEIGHTING MATRIX

AERODYNAMIC MATRIX 1./K R = 0.10000000E 01
SURFACE 1, 34 CONTROL POINTS

	COLUMN 1	COLUMN 2	COLUMN 3	COLUMN 4	COLUMN 5	COLUMN 6
1	0.	0.	0.	0.	0.	0.
2	0.	0.	0.	0.	0.	0.
3	0.	0.	0.	0.	0.	0.
4	0.	0.	0.	0.	0.	0.
5	0.	0.	0.	0.	0.	0.
6	0.	0.	0.	0.	0.	0.
7	0.	0.	0.	0.	0.	0.
8	0.	0.	0.	0.	0.	0.
9	0.	0.	0.	0.	0.	0.
10	0.	0.	0.	0.	0.	0.
11	0.	0.	0.	0.	0.	0.
12	0.	0.	0.	0.	0.	0.
13	0.	0.	0.	0.	0.	0.
14	0.	0.	0.	0.	0.	0.
15	0.	0.	0.	0.	0.	0.
16	0.	0.	0.	0.	0.	0.
17	0.	0.	0.	0.	0.	0.
18	0.	0.	0.	0.	0.	0.
19	0.	0.	0.	0.	0.	0.
20	0.	0.	0.	0.	0.	0.
21	0.	0.	0.	0.	0.	0.
22	0.	0.	0.	0.	0.	0.
23	0.	0.	0.	0.	0.	0.
24	0.	0.	0.	0.	0.	0.
25	0.	0.	0.	0.	0.	0.
26	0.	0.	0.	0.	0.	0.
27	0.	0.	0.	0.	0.	0.
28	0.	0.	0.	0.	0.	0.
29	0.	0.	0.	0.	0.	0.
30	0.	0.	0.	0.	0.	0.
31	0.	0.	0.	0.	0.	0.
32	0.	0.	0.	0.	0.	0.
33	0.	0.	0.	0.	0.	0.
34	0.	0.	0.	0.	0.	0.

	COLUMN 7	COLUMN 8	COLUMN 9	COLUMN 10	COLUMN 11	COLUMN 12
1	0.	0.	0.	0.	0.	0.
2	0.	0.	0.	0.	0.	0.
3	0.	0.	0.	0.	0.	0.
4	0.	0.	0.	0.	0.	0.
5	0.	0.	0.	0.	0.	0.
6	0.	0.	0.	0.	0.	0.
7	0.	0.	0.	0.	0.	0.
8	0.	0.	0.	0.	0.	0.
9	0.	0.	0.	0.	0.	0.
10	0.	0.	0.	0.	0.	0.
11	0.	0.	0.	0.	0.	0.
12	0.	0.	0.	0.	0.	0.
13	0.	0.	0.	0.	0.	0.
14	0.	0.	0.	0.	0.	0.
15	0.	0.	0.	0.	0.	0.
16	0.	0.	0.	0.	0.	0.
17	0.	0.	0.	0.	0.	0.
18	0.	0.	0.	0.	0.	0.
19	0.	0.	0.	0.	0.	0.

	COLUMN 13	COLUMN 14	COLUMN 15	COLUMN 16	COLUMN 17	COLUMN 18
20	0.	0.	0.	0.	0.	0.
21	0.	0.	0.	0.	0.	0.
22	0.	0.	0.	0.	0.	0.
23	0.	0.	0.	0.	0.	0.
24	0.	0.	0.	0.	0.	0.
25	0.	0.	0.	0.	0.	0.
26	0.	0.	0.	0.	0.	0.
27	0.	0.	0.	0.	0.	0.
28	0.	0.	0.	0.	0.	0.
29	0.	0.	0.	0.	0.	0.
30	0.	0.	0.	0.	0.	0.
31	0.	0.	0.	0.	0.	0.
32	0.	0.	0.	0.	0.	0.
33	0.	0.	0.	0.	0.	0.
34	0.	0.	0.	0.	0.	0.

	COLUMN 19	COLUMN 20	COLUMN 21	COLUMN 22	COLUMN 23	COLUMN 24
1	0.	0.	0.	0.	0.	0.
2	0.	0.	0.	0.	0.	0.
3	0.	0.	0.	0.	0.	0.
4	0.	0.	0.	0.	0.	0.
5	0.	0.	0.	0.	0.	0.
6	0.	0.	0.	0.	0.	0.
7	0.	0.	0.	0.	0.	0.
8	0.	0.	0.	0.	0.	0.
9	0.	0.	0.	0.	0.	0.
10	0.	0.	0.	0.	0.	0.
11	0.	0.	0.	0.	0.	0.
12	0.	0.	0.	0.	0.	0.
13	0.	0.	0.	0.	0.	0.
14	0.	0.	0.	0.	0.	0.
15	0.	0.	0.	0.	0.	0.
16	0.	0.	0.	0.	0.	0.
17	0.	0.	0.	0.	0.	0.
18	0.	0.	0.	0.	0.	0.
19	0.	0.	0.	0.	0.	0.
20	0.	0.	0.	0.	0.	0.
21	0.	0.	0.	0.	0.	0.
22	0.	0.	0.	0.	0.	0.
23	0.	0.	0.	0.	0.	0.
24	0.	0.	0.	0.	0.	0.
25	0.	0.	0.	0.	0.	0.
26	0.	0.	0.	0.	0.	0.
27	0.	0.	0.	0.	0.	0.
28	0.	0.	0.	0.	0.	0.
29	0.	0.	0.	0.	0.	0.
30	0.	0.	0.	0.	0.	0.
31	0.	0.	0.	0.	0.	0.
32	0.	0.	0.	0.	0.	0.
33	0.	0.	0.	0.	0.	0.
34	0.	0.	0.	0.	0.	0.

6	0.	0.	0.	0.	0.	0.
7	0.	0.	0.	0.	0.	0.
8	0.	0.	0.	0.	0.	0.
9	0.	0.	0.	0.	0.	0.
10	0.	0.	0.	0.	0.	0.
11	0.	0.	0.26151800E 01	-0.73687000E 00	-0.48823500E 01	-0.32103800E 00
12	0.	0.	-0.10936300E 01	-0.27342300E-02	0.39008000E 01	0.30082800E 01
13	0.	0.	-0.18910000E 01	0.65292400E 00	0.56824000E 01	0.10457700E 01
14	0.	0.	0.13045300E 01	-0.37373500E 00	-0.23091000E 01	-0.22811000E 00
15	0.	0.	-0.55837000E 00	-0.65447300E-02	0.21158100E 01	0.15453800E 01
16	0.	0.	-0.95430900E 00	0.32668600E 00	0.29214200E 01	0.53541800E 00
17	0.	0.	-0.16650500E 00	0.33717300E-01	0.56934700E 00	-0.11020400E 00
18	0.	0.	0.40640700E-01	-0.13001000E-01	0.81880500E-01	-0.71240700E-01
19	0.	0.	0.97245600E-01	-0.42523700E-01	-0.19520800E 00	-0.11123300E-01
20	0.	0.	-0.26524200E 01	0.70127500E 00	0.55980300E 01	0.20655200E 00
21	0.	0.	0.10163100E 01	-0.42876000E-01	-0.31726800E 01	-0.25649300E 01
22	0.	0.	0.18545700E 01	-0.67302000E 00	-0.53695100E 01	-0.83088900E 00
23	0.	0.	0.17857500E 00	0.44690800E 00	-0.10520300E 01	0.18832700E 01
24	0.	0.	-0.15772500E 00	0.89393500E 00	0.12626800E 01	-0.13000700E 00
25	0.	0.	0.27330100E 00	0.10458600E-01	0.35430300E 00	-0.82326500E 00
26	0.	0.	0.97333000E-01	0.22462500E 00	-0.34805800E 00	0.98626300E 00
27	0.	0.	-0.71193600E-01	0.45569800E 00	0.71932700E 00	-0.45888900E-01
28	0.	0.	0.14426000E 00	0.12606500E-01	0.20605400E 00	-0.38247600E 00
29	0.	0.	0.50983000E-02	-0.11922400E-01	0.45605300E 00	0.34231800E-01
30	0.	0.	0.28456300E-01	-0.31317600E-01	0.97848100E-01	0.11288400E 00
31	0.	0.	0.21093800E-02	0.27607800E-03	-0.42906700E-01	0.78629800E-01
32	0.	0.	-0.14971400E 00	-0.33312900E 00	0.21942200E 01	-0.11567800E 01
33	0.	0.	0.22106400E 00	-0.80338500E 00	-0.85548900E 00	0.52321500E 00
34	0.	0.	-0.20565500E 00	-0.80686100E-01	-0.85198000E 00	0.67012900E 00
	COLUMN 25	COLUMN 26	COLUMN 27	COLUMN 28	COLUMN 29	COLUMN 30

1	0.	0.	0.	0.	0.	0.
2	0.	0.	0.	0.	0.	0.
3	0.	0.	0.	0.	0.	0.
4	0.	0.	0.	0.	0.	0.
5	0.	0.	0.	0.	0.	0.
6	0.	0.	0.	0.	0.	0.
7	0.	0.	0.	0.	0.	0.
8	0.	0.	0.	0.	0.	0.
9	0.	0.	0.	0.	0.	0.
10	0.	0.	0.	0.	0.	0.
11	0.30947300E 01	0.31772600E-01	-0.68181700E 01	0.16042400E 01	0.11439900E 02	-0.33341300E 00
12	-0.18167700E 01	-0.34271500E 01	0.26669000E 01	0.62185900E-01	-0.57565700E 01	-0.36187100E 01
13	-0.35902300E 01	-0.18191300E 01	0.49241300E 01	-0.14113800E 01	-0.10195100E 02	-0.73013900E 00
14	0.13927500E 01	0.12970200E-01	-0.33846500E 01	0.77891600E 00	0.57614000E 01	-0.16191900E 00
15	-0.10370200E 01	-0.18194700E 01	0.12667700E 01	0.14596000E-01	-0.27109400E 01	-0.16918000E 01
16	-0.18580500E 01	-0.95126900E 00	0.24057600E 01	-0.69928500E 00	-0.49689100E 01	-0.31162300E 00
17	-0.50236700E 00	-0.15214800E-01	0.76946900E 00	-0.20487700E 00	-0.11942400E 01	0.37417100E-01
18	-0.12468300E 00	-0.19969000E-01	-0.38984600E 00	-0.23115200E-01	0.88647900E 00	0.53000800E 00
19	0.11153000E 00	0.86896900E-02	-0.61484700E 00	0.17085900E 00	0.13039000E 01	0.12241100E 00
20	-0.38123900E 01	-0.24567500E 00	0.98195600E 01	-0.23479000E 01	-0.16476200E 02	0.46466200E 00
21	0.13594300E 01	0.27617100E 01	-0.39968800E 01	-0.68642000E-01	0.87215300E 01	0.51783500E 01
22	0.34056200E 01	0.15152500E 01	-0.71816700E 01	0.20810300E 01	0.14954400E 02	0.95458200E 00
23	0.23131800E 01	-0.13544500E 01	-0.10367000E 01	-0.14173500E 01	0.33656000E 01	-0.57398100E 00
24	-0.23999700E 00	-0.38944500E 00	0.11981500E 00	-0.16001300E 01	-0.61913500E 00	0.16419700E 01
25	-0.73510600E 00	0.25575300E 00	-0.24883200E 00	0.10812100E 01	0.23777700E 00	-0.20248600E 00
26	0.10234900E 01	-0.81356400E 00	-0.53084500E 00	-0.78687300E 00	0.16965900E 01	-0.78858600E-01
27	-0.16658900E 00	-0.28605500E 00	0.69565800E-01	-0.82534500E 00	-0.33685300E 00	0.89456700E 00
28	-0.37128000E 00	0.79245900E-01	-0.10312200E 00	0.58329300E 00	0.66640900E-01	-0.10846500E 00
29	-0.39525100E 00	-0.26149800E 00	0.82738400E-01	0.85740800E-01	-0.28159200E 00	0.28846100E 00

30	-0.65034400E-01	-0.17461100E 00	0.46570000E-02	0.12507400E 00	0.33422200E-01	-0.62724500E-01
31	0.72861300E-01	-0.42705700E-01	0.55441600E-01	-0.18012100E 00	-0.13436800E 00	0.12313400E 00
32	-0.28342200E 01	0.10809100E 00	0.14891000E 01	0.20342100E 01	-0.46394800E 01	0.87324400E 00
33	0.14383900E 00	-0.18911600E 00	-0.69677300E-01	0.20585800E 01	0.71144200E 00	-0.20528100E 01
34	0.10143300E 01	0.61759600E-01	0.35460700E 00	-0.20140000E 01	-0.63373800E 00	0.96287700E 00
	COLUMN 31	COLUMN 32	COLUMN 33	COLUMN 34	COLUMN 35	COLUMN 36

1	0.	0.	0.	0.	0.	0.
2	0.	0.	0.	0.	0.	0.
3	0.	0.	0.	0.	0.	0.
4	0.	0.	0.	0.	0.	0.
5	0.	0.	0.	0.	0.	0.
6	0.	0.	0.	0.	0.	0.
7	0.	0.	0.	0.	0.	0.
8	0.	0.	0.	0.	0.	0.
9	0.	0.	0.	0.	0.	0.
10	0.	0.	0.	0.	0.	0.
11	-0.54858500E 01	-0.57732100E-01	0.42262200E 01	-0.97700800E 00	-0.67706400E 01	0.35455500E 00
12	0.21025400E 01	0.36052700E 01	-0.19480000E 01	-0.68786900E-01	0.45326300E 01	0.23168900E 01
13	0.49991300E 01	0.19439500E 01	-0.32431700E 01	0.85814900E 00	0.68259200E 01	0.30929600E 00
14	-0.28096500E 01	-0.62031900E-01	0.29544100E 01	-0.68534700E 00	-0.46498800E 01	0.17268900E 00
15	0.97790100E 00	0.16849400E 01	-0.14240900E 01	-0.56689900E-01	0.33525600E 01	0.16952100E-01
16	0.24446900E 01	0.90897800E 00	-0.23041300E 01	0.59202600E 00	0.48822700E 01	0.28517500E 00
17	0.51267400E 00	-0.27077300E-01	0.60174100E 00	-0.15329600E 00	-0.74859400E 00	-0.66767200E-01
18	-0.35880700E 00	-0.54213500E 00	-0.40887900E 00	-0.29428700E-01	0.10651300E 01	0.50673100E 00
19	-0.64145400E 00	-0.28234000E 00	-0.54210800E 00	0.11641900E 00	0.12134200E 01	0.16255500E 00
20	0.78614900E 01	0.11594900E 00	-0.59886400E 01	0.13315300E 01	0.99640599E 01	-0.47121300E 00
21	-0.33293000E 01	-0.52429000E 01	0.25491100E 01	0.91385200E-01	-0.54656600E 01	-0.30109200E 01
22	-0.73994400E 01	-0.27891200E 01	0.44804300E 01	-0.11368900E 01	-0.91432500E 01	-0.53658600E 00
23	-0.39522300E 01	0.52293900E 00	0.84141100E 00	-0.19335800E 00	-0.26531700E 01	0.19051100E 01
24	-0.11130900E 00	-0.46001100E 00	-0.11358100E-01	0.44783000E 00	0.17054800E 00	-0.12623300E 00
25	0.74877400E 00	-0.26350000E 00	-0.82677800E-01	0.30533600E-01	0.76065300E 00	-0.44822300E 00
26	-0.19508900E 01	0.12055900E 00	0.63154400E 00	-0.24563500E 00	-0.18732600E 01	0.15485100E 01
27	-0.23273900E-01	-0.27791400E 00	0.45835500E-01	0.20887700E 00	-0.80742900E-02	0.73301300E-01
28	0.41744100E 00	-0.12534500E 00	-0.65067300E-01	-0.20403700E-02	0.46562300E 00	-0.23947900E 00
29	0.41813900E 00	-0.23693400E 00	0.14297500E 00	-0.18990300E 00	-0.24335700E 00	0.70569400E 00
30	0.45943300E-01	-0.27200300E-01	0.60363500E-01	-0.60682200E-01	-0.78909600E-01	0.24619600E 00
31	-0.54992900E-02	-0.25858000E-02	0.10830000E-01	-0.22646000E-01	-0.50573600E-01	0.23049000E-01
32	0.55258600E 01	-0.88569200E 00	-0.14620300E 01	0.42583000E 00	0.50191600E 01	-0.22505900E 01
33	0.20426100E 00	0.50656100E 00	-0.89857900E-01	-0.43042400E 00	0.37709800E 00	0.29247100E 00
34	-0.89374900E 00	0.15546800E 00	0.29029200E 00	-0.90093600E-01	-0.14694400E 01	0.58700200E 00
	COLUMN 37	COLUMN 38	COLUMN 39	COLUMN 40	COLUMN 41	COLUMN 42

1	0.	0.	0.	0.	0.	0.
2	0.	0.	0.	0.	0.	0.
3	0.	0.	0.	0.	0.	0.
4	0.	0.	0.	0.	0.	0.
5	0.	0.	0.	0.	0.	0.
6	0.	0.	0.	0.	0.	0.
7	0.	0.	0.	0.	0.	0.
8	0.	0.	0.	0.	0.	0.
9	0.	0.	0.	0.	0.	0.
10	0.	0.	0.	0.	0.	0.
11	0.30435700E 01	-0.23375900E 00	-0.10420600E 01	0.19187100E 00	0.16663700E 01	0.10981900E-02
12	-0.19084300E 01	-0.24544100E 01	0.44643100E 00	0.37177300E-01	-0.89782100E 00	-0.52946000E 00
13	-0.34546300E 01	-0.12821000E 01	0.79886000E 00	-0.14596100E 00	-0.15537600E 01	-0.18939700E 00
14	0.20175100E 01	-0.13141200E 00	-0.72923300E 00	0.13194600E 00	0.11677200E 01	0.75523600E-02
15	-0.15009200E 01	-0.10092500E 01	0.30566900E 00	0.25220000E-01	-0.60262600E 00	-0.35473400E 00

16	-0.24693000E 01	-0.86489700E 00	0.55620400E 00	-0.97583800E-01	-0.10688300E 01	-0.13673900E 00
17	0.17594000E 00	-0.15353300E-01	0.19434700E 00	-0.38972600E-01	-0.29148200E 00	-0.18810100E-02
18	-0.52509700E 00	-0.57548800E 00	-0.11475300E 00	-0.62871300E-02	0.26667600E 00	0.12500300E 00
19	-0.61563900E 00	-0.30507600E 00	-0.16388200E 00	0.34368908E-01	0.34791300E 00	0.32245500E-01
20	-0.46751100E 01	0.16911800E 00	0.18141000E 01	-0.33437200E 00	-0.28663400E 01	-0.29260600E-01
21	0.22072700E 01	0.29856200E 01	-0.81742900E 00	-0.57036800E-01	0.16869800E 01	0.90856300E 00
22	0.45061900E 01	0.15020900E 01	-0.14133400E 01	0.26118100E 00	0.27682600E 01	0.31601600E 00
23	0.25945400E 01	-0.11179800E 01	-0.30551900E 00	0.14919400E 00	0.97060300E 00	-0.54716000E 00
24	0.16512600E 00	-0.20708600E 00	-0.34353500E-01	-0.29494700E-01	0.12098100E 00	-0.10143400E-01
25	-0.81087300E 00	0.11625200E 00	0.70002300E-01	-0.62877600E-01	-0.24713000E 00	0.22728700E 00
26	0.18111500E 01	-0.94112000E 00	-0.22784800E 00	0.11302200E 00	0.71468000E 00	-0.37431900E 00
27	0.18542400E 00	-0.21861100E 00	-0.28477000E-01	-0.11570600E-01	0.95949200E-01	-0.10039300E-01
28	-0.48971300E 00	0.63433700E-01	0.58708700E-01	-0.52135500E-01	-0.19668400E 00	0.16882600E 00
29	0.29467000E 00	-0.53635400E 00	0.42728200E-01	-0.52663400E-01	-0.13337200E 00	0.17883700E 00
30	0.96039000E-01	-0.20155400E 00	0.94358600E-02	-0.11781200E-01	-0.28394000E-01	0.46447400E-01
31	0.30946000E-01	0.56663700E-02	-0.28181200E-02	0.87843000E-03	0.95123200E-02	-0.13771400E-01
32	-0.43321100E 01	-0.75709900E 00	0.52840800E 00	-0.31825100E 00	-0.16434100E 01	0.10566500E 01
33	-0.51210500E 00	-0.11206800E 00	0.65239800E-01	-0.22074000E-02	-0.20952100E 00	0.10733400E 00
34	0.13430300E 01	-0.63421300E-01	-0.13449700E 00	0.10617300E 00	0.43884000E 00	-0.37315200E 00
	COLUMN 43	COLUMN 44	COLUMN 45	COLUMN 46	COLUMN 47	COLUMN 48

1	0.	0.	0.	0.	0.	0.
2	0.	0.	0.	0.	0.	0.
3	0.	0.	0.	0.	0.	0.
4	0.	0.	0.	0.	0.	0.
5	0.	0.	0.	0.	0.	0.
6	0.	0.	0.	0.	0.	0.
7	0.	0.	0.	0.	0.	0.
8	0.	0.	0.	0.	0.	0.
9	0.	0.	0.	0.	0.	0.
10	0.	0.	0.	0.	0.	0.
11	-0.71212700E 00	-0.86658300E-03	-0.29557300E 00	0.90611300E-01	0.60996600E 00	-0.15676500E 00
12	0.34811600E 00	0.48334500E 00	-0.77620000E-01	0.25152000E 00	0.17725200E 00	-0.49635500E 00
13	0.72163900E 00	0.28566300E 00	0.19261100E 00	0.11683700E 00	-0.38180400E 00	-0.24860300E 00
14	-0.49881200E 00	-0.59816600E-02	-0.15963900E 00	0.10047400E 00	0.33272300E 00	-0.18738700E 00
15	0.23030500E 00	0.31899900E 00	-0.70944300E-01	0.19668400E 00	0.15837900E 00	-0.38647700E 00
16	0.49173400E 00	0.19544300E 00	0.10471300E 00	0.88256500E-01	-0.20473100E 00	-0.18413300E 00
17	0.11203200E 00	-0.42154500E-02	-0.60551700E-02	0.95369600E-01	0.19640800E-01	-0.18958700E 00
18	-0.12428500E 00	-0.13092700E 00	-0.56206900E-01	0.11543500E 00	0.12139600E 00	-0.22477600E 00
19	-0.17397000E 00	-0.67353800E-01	0.53541500E-02	0.48148100E-01	-0.61503300E-02	-0.95860900E-01
20	0.11966100E 01	0.12482700E-01	0.15583800E 00	0.65422200E-01	-0.31852200E 00	-0.14407200E 00
21	-0.69317500E 00	-0.85406300E 00	-0.52348400E-01	-0.53589800E-02	0.10448700E 00	0.15449300E-01
22	-0.12999800E 01	-0.49778200E 00	-0.11662200E 00	-0.59987500E-02	0.23601000E 00	0.21944900E-01
23	-0.80200300E 00	0.24274900E 00	-0.70346200E 00	-0.24984800E 00	0.35531600E 01	0.42460600E 00
24	-0.11569200E 00	0.48450100E-02	-0.17572100E 01	-0.21751900E 01	0.31172400E 01	0.43038700E 01
25	0.22602000E 00	-0.12033700E 00	-0.40708900E 01	-0.19686300E 01	0.56895700E 01	0.42544400E 01
26	-0.57452500E 00	0.15287500E 00	-0.51547300E 00	-0.12524600E-01	0.21073000E 01	0.14883700E-02
27	-0.82645500E-01	-0.87812800E-03	-0.10010800E 01	-0.10673300E 01	0.17993000E 01	0.21193900E 01
28	0.17140700E 00	-0.85746500E-01	-0.21141000E 01	-0.99168200E 00	0.29954100E 01	0.21468600E 01
29	0.12742600E 00	-0.10619800E 00	-0.32840800E 00	0.21895800E 00	0.50890900E 00	-0.48567600E 00
30	0.29912800E-01	-0.30583600E-01	-0.14920700E 00	0.15596400E 00	0.30967200E 00	-0.29251100E 00
31	-0.11878000E-01	0.10292300E-01	0.12018100E 00	0.85449900E-01	-0.83594700E-01	-0.18216100E 00
32	0.13536000E 01	-0.49690300E 00	-0.45688000E 00	0.57963800E 00	-0.14180500E 01	-0.18176500E 01
33	0.19236300E 00	-0.61026800E-01	0.10829300E 01	0.21324800E 01	-0.18180200E 01	-0.41708800E 01
34	-0.38662400E 00	0.19724100E 00	0.39617600E 01	0.17857000E 01	-0.53277900E 01	-0.38841600E 01
	COLUMN 49	COLUMN 50	COLUMN 51	COLUMN 52	COLUMN 53	COLUMN 54

1	0.	0.	0.	0.	0.	0.
2	0.	0.	0.	0.	0.	0.

3	0.	0.	0.	0.	0.	0.
4	0.	0.	0.	0.	0.	0.
5	0.	0.	0.	0.	0.	0.
6	0.	0.	0.	0.	0.	0.
7	0.	0.	0.	0.	0.	0.
8	0.	0.	0.	0.	0.	0.
9	0.	0.	0.	0.	0.	0.
10	0.	0.	0.	0.	0.	0.
11	-0.32860400E 00	-0.21251400E-02	-0.38379000E-01	0.32667100E-01	0.74865300E-01	-0.62472900E-01
12	-0.15122500E 00	0.22487300E 00	-0.11350400E-01	0.59325200E-01	0.26955400E-01	-0.11626500E 00
13	0.16209400E 00	0.17364500E 00	0.29276800E-01	0.21422000E-01	-0.53739200E-01	-0.44178100E-01
14	-0.19151600E 00	0.49865400E-01	-0.30891000E-01	0.29857700E-01	0.61949100E-01	-0.57347000E-01
15	-0.12735400E 00	0.17243500E 00	-0.15893000E-01	0.48665800E-01	0.35788200E-01	-0.95365100E-01
16	0.80392100E-01	0.11802700E 00	0.20992300E-01	0.19068300E-01	-0.39698700E-01	-0.39267500E-01
17	-0.33270800E-01	0.91975700E-01	-0.12887400E-01	0.22893600E-01	0.29860100E-01	-0.44627800E-01
18	-0.88123700E-01	0.96490900E-01	-0.17226600E-01	0.31087800E-01	0.37361200E-01	-0.60761900E-01
19	-0.89282501E-02	0.48060600E-01	0.74929500E-02	0.13869900E-01	-0.14947400E-01	-0.28226500E-01
20	0.13843100E 00	0.11242800E 00	0.13094000E-01	0.63152400E-02	-0.19949600E-01	-0.13082600E-01
21	-0.50153800E-01	-0.21079000E-01	-0.13255600E-01	0.24838500E-02	0.26875200E-01	-0.45455300E-02
22	-0.11621500E 00	-0.41792800E-01	-0.10820900E-01	0.51265700E-02	0.18312800E-01	-0.98414600E-02
23	-0.26370200E 01	-0.13066000E 01	-0.37425600E 00	0.66748800E 00	-0.22246800E 01	-0.11692800E 01
24	-0.98919800E 00	-0.23906200E 01	0.14548800E 01	0.27322000E 01	-0.24610200E 01	-0.53569200E 01
25	-0.13864700E 01	-0.20882800E 01	0.49120100E 01	0.24272700E 01	-0.65086600E 01	-0.52361200E 01
26	-0.15074300E 01	-0.58790200E 00	-0.33844600E 00	0.34187700E 00	-0.81802300E 00	-0.59717600E 00
27	-0.61689000E 00	-0.12068900E 01	0.62003600E 00	0.13097800E 01	-0.10313100E 01	-0.25631700E 01
28	-0.76393300E 00	-0.10703200E 01	0.23791300E 01	0.11974600E 01	-0.31041300E 01	-0.25002200E 01
29	-0.23626100E 00	0.19017400E 00	-0.16544300E 00	-0.37669500E-01	0.65306400E 00	0.64867100E-01
30	-0.18849600E 00	0.10460900E 00	-0.30778400E 00	-0.35722800E 00	0.54870100E 00	0.70763700E 00
31	-0.42823900E-01	0.53431600E-01	-0.64401100E 00	-0.33122500E 00	0.91403600E 00	0.71164400E 00
32	0.15735600E 01	0.14149700E 01	0.33445100E 00	-0.82883100E 00	0.36440100E 01	0.14350500E 01
33	0.36955200E 00	0.21870600E 01	-0.22537300E 01	-0.39294900E 01	0.38527200E 01	0.77131500E 01
34	0.11870000E 01	0.18085300E 01	-0.71850500E 01	-0.35403900E 01	0.95567700E 01	0.76370700E 01
	COLUMN 55	COLUMN 56	COLUMN 57	COLUMN 58	COLUMN 59	COLUMN 60

1	0.	0.	0.	0.	0.	0.
2	0.	0.	0.	0.	0.	0.
3	0.	0.	0.	0.	0.	0.
4	0.	0.	0.	0.	0.	0.
5	0.	0.	0.	0.	0.	0.
6	0.	0.	0.	0.	0.	0.
7	0.	0.	0.	0.	0.	0.
8	0.	0.	0.	0.	0.	0.
9	0.	0.	0.	0.	0.	0.
10	0.	0.	0.	0.	0.	0.
11	-0.43453600E-01	0.23370600E-01	-0.14552200E 00	0.77996300E-01	0.29810200E 00	-0.14365200E 00
12	-0.27330900E-01	0.54248500E-01	-0.35490600E-01	0.16357200E 00	0.84514000E-01	-0.32211300E 00
13	0.20384700E-01	0.27375000E-01	0.10430300E 00	0.64679600E-01	-0.20303800E 00	-0.13655000E 00
14	-0.37872300E-01	0.21099200E-01	-0.93715400E-01	0.75502000E-01	0.19618300E 00	-0.14291800E 00
15	-0.29622100E-01	0.42827400E-01	-0.42658200E-01	0.13191900E 00	0.96478900E-01	-0.25902200E 00
16	0.14781800E-01	0.24110000E-01	0.65098600E-01	0.54146500E-01	-0.12665600E 00	-0.11264600E 00
17	-0.21360800E-01	0.17765000E-01	-0.23074000E-01	0.63609800E-01	0.54700600E-01	-0.12492000E 00
18	-0.26417200E-01	0.25515800E-01	-0.44061500E-01	0.81881600E-01	0.95210100E-01	-0.15962000E 00
19	0.43999500E-02	0.16267900E-01	0.13698500E-01	0.35697400E-01	-0.25912300E-01	-0.71971500E-01
20	0.62079100E-02	0.69325400E-02	0.83520700E-01	0.28800800E-01	-0.16419900E 00	-0.64170200E-01
21	-0.14262100E-01	-0.39073500E-03	-0.34517000E-01	0.20806400E-02	0.68566100E-01	-0.11697500E-02
22	-0.90170200E-02	0.40157500E-02	-0.60761000E-01	0.67970200E-02	0.12178800E 00	-0.83683300E-02
23	0.22287300E 01	0.17896500E 01	-0.27489200E 00	-0.17743300E 00	0.22634900E 01	0.20597500E 00
24	0.53650300E 00	0.28179700E 01	-0.12195000E 01	-0.16136000E 01	0.21495500E 01	0.31841400E 01
25	0.13404400E 01	0.24116100E 01	-0.31180200E 01	-0.14742500E 01	0.43024700E 01	0.31897500E 01

26	0.96672500E 00	0.87054800E 00	-0.37102500E 00	-0.10411000E 00	0.19143300E 01	0.16667200E 00
27	0.18675300E 00	0.13324900E 01	-0.96720200E 00	-0.11717200E 01	0.17183500E 01	0.23171500E 01
28	0.60937300E 00	0.11281300E 01	-0.22351000E 01	-0.10782700E 01	0.31327300E 01	0.23284300E 01
29	-0.45677600E 00	-0.21007300E 00	-0.42502500E 00	0.51873200E-01	0.10546100E 01	-0.96670300E-01
30	-0.18022100E 00	-0.39691400E 00	-0.43225400E 00	-0.31176600E 00	0.79378800E 00	0.62738500E 00
31	-0.22805800E 00	-0.35602700E 00	-0.58358100E 00	-0.32240000E 00	0.90742500E 00	0.68666200E 00
32	-0.34689900E 01	-0.25146700E 01	-0.33233100E 00	0.58628600E 00	-0.17975200E 01	-0.10260700E 01
33	-0.92739600E 00	-0.40917100E 01	0.12466700E 01	0.22908800E 01	-0.21149900E 01	-0.44918700E 01
34	-0.19964600E 01	-0.35316400E 01	0.42137200E 01	0.19569400E 01	-0.56790900E 01	-0.42443900E 01
	COLUMN 61	COLUMN 62	COLUMN 63	COLUMN 64	COLUMN 65	COLUMN 66

1	0.	0.	0.	0.	0.	0.
2	0.	0.	0.	0.	0.	0.
3	0.	0.	0.	0.	0.	0.
4	0.	0.	0.	0.	0.	0.
5	0.	0.	0.	0.	0.	0.
6	0.	0.	0.	0.	0.	0.
7	0.	0.	0.	0.	0.	0.
8	0.	0.	0.	0.	0.	0.
9	0.	0.	0.	0.	0.	0.
10	0.	0.	0.	0.	0.	0.
11	-0.16693500E 00	0.33885100E-01	-0.11589100E-01	0.91471000E-02	0.24095700E-01	-0.17100600E-01
12	-0.81974900E-01	0.14924400E 00	-0.16009000E-02	0.15618400E-01	0.45074500E-02	-0.38836700E-01
13	0.84517600E-01	0.93000000E-01	0.95017500E-02	0.50122000E-02	-0.18626000E-01	-0.10760900E-01
14	-0.11674900E 00	0.45701100E-01	-0.85713200E-02	0.81606100E-02	0.18201800E-01	-0.15458000E-01
15	-0.80377300E-01	0.11650900E 00	-0.33314700E-02	0.12934300E-01	0.77723400E-02	-0.25440000E-01
16	0.49747500E-01	0.72010200E-01	0.65060100E-02	0.47509300E-02	-0.12781900E-01	-0.99923700E-02
17	-0.44193300E-01	0.54226700E-01	-0.33024300E-02	0.62539600E-02	0.76333500E-02	-0.12225000E-01
18	-0.67531300E-01	0.67370600E-01	-0.48670400E-02	0.86556100E-02	0.10546800E-01	-0.16859900E-01
19	0.46547500E-02	0.39417600E-01	0.19856000E-02	0.39771500E-02	-0.38436700E-02	-0.80336400E-02
20	0.73783200E-01	0.52369000E-01	0.10072500E-01	0.15809800E-02	-0.20544600E-01	-0.41642000E-02
21	-0.34054600E-01	-0.78824800E-02	-0.36079200E-02	0.11550300E-02	0.71911000E-02	-0.18143900E-02
22	-0.61631900E-01	-0.11117300E-01	-0.65526100E-02	0.20846600E-02	0.13663100E-01	-0.33806000E-02
23	-0.18205400E 01	-0.95009200E 00	-0.72509700E-01	0.89459200E-01	-0.26651200E 00	-0.15631400E 00
24	-0.65609800E 00	-0.17500800E 01	0.18842400E 00	0.37423200E 00	-0.31521200E 00	-0.73302700E 00
25	-0.10200800E 01	-0.15386500E 01	0.67208700E 00	0.34352400E 00	-0.68592600E 00	-0.73751800E 00
26	-0.14341100E 01	-0.67715200E 00	-0.70655300E-01	0.64402300E-01	-0.14852400E 00	-0.11216100E 00
27	-0.55[illegible]200E 00	-0.12986000E 01	0.11901800E 00	0.25699200E 00	-0.19619900E 00	-0.50269000E 00
28	-0.77064900E 00	-0.11458700E 01	0.46326300E 00	0.23567200E 00	-0.60538900E 00	-0.50623700E 00
29	-0.62824300E 00	-0.13786200E 00	-0.55996800E-01	-0.51730700E-02	0.17932000E 00	0.89204099E-02
30	-0.38939600E 00	-0.38536400E 00	-0.81635100E-01	-0.84689500E-01	0.14630700E 00	0.16813400E 00
31	-0.27446500E 00	-0.37856200E 00	-0.14970400E 00	-0.82816200E-01	0.21903500E 00	0.17645200E 00
32	0.18195900E 01	0.15031500E 01	0.60600800E-01	-0.11312600E 00	0.59791900E 00	0.19173100E 00
33	0.47698400E 00	0.23679100E 01	-0.37839800E 00	-0.64956100E 00	0.64561900E 00	0.12751000E 01
34	0.12621300E 01	0.19863100E 01	-0.12012600E 01	-0.61491300E 00	0.15998300E 01	0.13195000E 01
	COLUMN 67	COLUMN 68	COLUMN			

1	0.	0.
2	0.	0.
3	0.	0.
4	0.	0.
5	0.	0.
6	0.	0.
7	0.	0.
8	0.	0.
9	0.	0.
10	0.	0.
11	-0.14160200E-01	0.53564600E-02
12	-0.60435900E-02	0.14706500E-01
13	0.79715099E-02	0.77021600E-02
14	-0.11129700E-01	0.52387300E-02

15	-0.70421700E-02	0.11642260E-01
16	0.52025200E-02	0.66257100E-02
17	-0.55480500E-02	0.49704000E-02
18	-0.74003900E-02	0.70272900E-02
19	0.10167200E-02	0.45224600E-02
20	0.98864200E-02	0.48998000E-02
21	-0.37034900E-02	-0.39283700E-04
22	-0.73180200E-02	-0.25449000E-03
23	0.28775900E 00	0.24049500E 00
24	0.62806400E-01	0.38289300E 00
25	0.17752800E 00	0.33801500E 00
26	0.18261400E 00	0.16588600E 00
27	0.33244300E-01	0.26026800E 00
28	0.11780700E 00	0.22957000E 00
29	-0.11765100E 00	-0.46492500E-01
30	-0.50382100E-01	-0.95887900E-01
31	-0.37943200E-01	-0.91119900E-01
32	-0.57775100E 00	-0.39488700E 00
33	-0.15660400E 00	-0.67648600E 00
34	-0.33212000E 00	-0.61196700E 00

OUTPUT DATA

FLUTTER ANALYSIS BY A COLLOCATION METHOD, USING AERODYNAMIC INFLUENCE COEFFICIENTS

DENSITY = 0.23780000E-02 REDUCED VELOCITY = 0.10000000E 01

2 RIGID BODY DEGREES OF FREEDOM

MODE	EIGENVALUE		ITERATIONS S.P.	D.P.	AITKENS S.P.	D.P.
1	0.17131410E-02	-0.72322634E-03	25	0	4	0
2	0.15157342E-02	0.25350746E-05	14	0	3	0
3	0.73881308E-03	-0.14775008E-03	39	0	3	0
4	0.56287548E-03	-0.28860156E-03	17	0	3	0
5	0.32688921E-03	-0.83572808E-04	30	0	4	0
6	0.30281017E-03	0.47060941E-06	10	0	1	0

EIGENVECTORS

	COLUMN 1	COLUMN 2	COLUMN 3	COLUMN 4	COLUMN 5	COLUMN 6
1	0.37643184E-02	0.80705241E-02	-0.13083326E 00	-0.17352749E 00	-0.21184392E-02	0.26283327E-02
2	0.19656667E-02	0.29771531E-02	-0.43331979E-01	-0.57166711E-01	-0.19439865E-03	0.40957239E-03
3	0.79181301E-03	0.17373488E-03	0.43627465E-02	0.63471594E-02	0.67433478E-03	-0.72229894E-03
4	-0.31688380E-03	-0.16344189E-02	0.34632312E-01	0.46853020E-01	0.92823931E-03	-0.13255245E-02
5	-0.13218182E-02	-0.23693806E-02	0.46845185E-01	0.63555706E-01	0.64095364E-03	-0.14494983E-02
6	-0.21969870E-02	-0.21788696E-02	0.44511541E-01	0.61157253E-01	0.50124068E-04	-0.13886483E-02
7	-0.28948243E-02	-0.10320762E-02	0.27739456E-01	0.39757663E-01	-0.73461328E-03	-0.93641223E-03
8	-0.34236945E-02	0.95860283E-03	-0.11769972E-02	0.23554941E-02	-0.16167203E-02	-0.38783438E-03
9	-0.39333056E-02	0.35423904E-02	-0.38202477E-01	-0.45605127E-01	-0.26603667E-02	0.28876097E-03
10	-0.51691147E-02	0.79435493E-02	-0.10312494E 00	-0.12928879E 00	-0.50164371E-02	0.13653685E-02
11	-0.14536092E-02	-0.33906591E-02	0.50773181E-01	0.65384260E-01	-0.92093510E-03	0.24627500E-02
12	-0.22198841E-02	-0.26426604E-02	0.40414138E-01	0.53456639E-01	-0.14363292E-02	0.19181078E-02
13	-0.28237340E-02	-0.18346718E-02	0.29860990E-01	0.41471687E-01	-0.42863891E-02	0.36461925E-02
14	-0.20512034E-02	-0.93737831E-02	0.72615594E-01	0.73729641E-01	-0.11394135E-01	0.27736265E-01
15	-0.19560580E-02	-0.86473648E-02	0.60781275E-01	0.65925887E-01	-0.28862874E-01	0.32560594E-01
16	-0.18772831E-02	-0.70791439E-02	0.46234537E-01	0.56523828E-01	-0.28316621E-01	0.33799398E-01
17	-0.31302892E-02	-0.17253523E-01	0.10164463E 00	0.84709737E-01	-0.27030114E-01	0.63706013E-01
18	-0.15281868E-02	-0.15943354E-01	0.86066488E-01	0.82227008E-01	-0.45992822E-01	0.71892097E-01
19	0.51591930E-03	-0.14905830E-01	0.75915013E-01	0.86677608E-01	-0.64144784E-01	0.77745844E-01
20	-0.44211907E-02	-0.25379461E-01	0.13177539E 00	0.96696629E-01	-0.45134925E-01	0.10283377E 00
21	-0.96908137E-03	-0.23961320E-01	0.11418587E 00	0.10101119E 00	-0.74989007E-01	0.11453976E 00
22	0.24460211E-02	-0.22564264E-01	0.96701087E-01	0.10527770E 00	-0.10477070E 00	0.12631485E 00
23	0.16786183E-01	0.26610741E-02	-0.39862011E-02	-0.27472312E-01	0.18891179E-01	-0.45805818E-03
24	0.16421816E-01	0.71617029E-02	-0.18660726E-01	-0.43179221E-01	0.18709944E-01	-0.81184856E-03
25	0.69122601E-02	0.16207665E-01	-0.56213495E-01	-0.73586688E-01	0.10535459E-01	0.11186333E-02
26	0.27405729E 00	-0.18580306E-01	0.26669872E 00	-0.26273074E-01	0.27194718E 00	0.10405294E-01

27	0.23279708E 00	0.47209725E-01	0.18687098E 00	-0.20641377E-01	0.24293449E 00	-0.19278797E-01
28	0.16743659E 00	0.18146886E 00	0.43751792E-01	-0.76791860E-02	0.20242910E 00	-0.80041389E-01
29	0.62018514E 00	-0.17005901E-01	0.61905639E 00	-0.15774926E-01	0.61740246E 00	0.92730224E-02
30	0.54078013E 00	0.10627347E 00	0.47756580E 00	0.87178880E-02	0.56165864E 00	-0.51602033E-01
31	0.38014052E 00	0.35120614E 00	0.19321891E 00	0.57069071E-01	0.44759098E 00	-0.17294512E 00
32	0.10000000E 01	0.12542395E-08	0.10000000E 01	0.	0.10000000E 01	0.
33	0.87357339E 00	0.17244078E 00	0.79020295E 00	0.38871136E-01	0.90711855E 00	-0.91033076E-01
34	0.62877912E 00	0.51668167E 00	0.37065954E 00	0.11646092E 00	0.72057259E 00	-0.27305778E 00
	COLUMN 7	COLUMN 8	COLUMN 9	COLUMN 10	COLUMN 11	COLUMN 12
1	-0.92542652E-03	0.93245277E-03	0.18032191E-02	-0.58784626E-03	-0.24308737E 00	-0.11772136E 00
2	0.31636750E-04	0.26611177E-03	-0.36212173E-03	-0.11646464E-03	0.50843932E-01	0.24889456E-01
3	0.43284813E-03	-0.96721004E-04	-0.11493591E-02	0.14723195E-03	0.15177272E 00	0.73441653E-01
4	0.48705526E-03	-0.31195582E-03	-0.10844131E-02	0.29303358E-03	0.13384684E 00	0.65015894E-01
5	0.24329271E-03	-0.35432235E-03	-0.46206123E-03	0.27244330E-03	0.39891480E-01	0.19834431E-01
6	-0.16577689E-03	-0.23503363E-03	0.17372986E-03	0.66365693E-04	-0.60631770E-01	-0.28551957E-01
7	-0.67991149E-03	0.49900503E-04	0.45244077E-03	-0.98901766E-04	-0.11749798E 00	-0.55895152E-01
8	-0.12574009E-02	0.46278486E-03	0.90909150E-04	0.97643875E-04	-0.95320107E-01	-0.45005755E-01
9	-0.19643947E-02	0.91924016E-03	-0.10718600E-02	0.53680204E-03	0.53855633E-02	0.39523040E-02
10	-0.37411872E-02	0.15383473E-02	-0.46030034E-02	-0.12741641E-02	0.27471270E 00	0.13530704E 00
11	0.11417481E-03	-0.71750451E-03	0.50542279E-02	0.67172742E-02	0.34318146E-01	0.15199346E-01
12	-0.29938732E-03	-0.40470186E-03	0.20948219E-02	-0.19573077E-02	-0.43880261E-01	-0.25747105E-01
13	-0.43834097E-03	-0.29019538E-03	0.80556757E-02	-0.13118468E-01	-0.10513174E 00	-0.63007494E-01
14	-0.37532443E-03	-0.30230092E-02	0.42979485E-01	0.47544612E-01	0.47492837E-01	0.98205006E-02
15	0.52160287E-03	-0.29928305E-02	0.55441164E-01	-0.26875470E-01	0.24943135E-01	-0.46997291E-01
16	0.13793444E-02	-0.26565667E-02	0.63717150E-01	-0.98244665E-01	-0.31700336E-02	-0.99882360E-01
17	-0.81454236E-03	-0.62126255E-02	0.10017100E 00	0.10563964E 00	0.72358344E-01	0.79171836E-02
18	0.17727052E-02	-0.62434917E-02	0.12723265E 00	-0.58798059E-01	0.11993947E 00	-0.67376494E-01
19	0.45228200E-02	-0.63414010E-02	0.15393344E 00	-0.22202783E 00	0.21417969E 00	-0.11886873E 00
20	-0.10386913E-02	-0.95996534E-02	0.16521012E 00	0.16316879E 00	0.10139676E 00	0.62531662E-02
21	0.32155529E-02	-0.98975118E-02	0.21267500E 00	-0.95305514E-01	0.23375105E 00	-0.84449488E-01
22	0.74578062E-02	-0.10196999E-01	0.26031677E 00	-0.35359351E 00	0.36606946E 00	-0.17611597E 00
23	0.19174281E-01	0.28179160E-03	0.22431114E-01	-0.14609367E-02	-0.14713462E-01	-0.23840340E-01
24	0.19738147E-01	-0.11183304E-02	0.19771706E-01	-0.25049537E-02	0.27566760E-01	-0.17715723E-02
25	0.12680110E-01	-0.87209297E-03	0.61055722E-02	-0.60185481E-03	0.10695511E 00	0.42035179E-01
26	0.26672868E 00	0.17823547E-01	0.28883789E 00	0.21929004E-01	0.28896227E 00	-0.56214876E-02
27	0.24994493E 00	-0.31519418E-01	0.23519369E 00	-0.45374707E-01	0.24532537E 00	-0.53379141E-01
28	0.23429437E 00	-0.13254088E 00	0.14473836E 00	-0.18331305E 00	0.17523168E 00	-0.15301572E 00
29	0.61254389E 00	0.15702000E-01	0.63305524E 00	0.19603336E-01	0.64782121E 00	0.93937626E-03
30	0.57997975E 00	-0.82248185E-01	0.53780810E 00	-0.11630895E 00	0.53220937E 00	-0.12311935E 00
31	0.51189152E 00	-0.27741983E 00	0.34497292E 00	-0.38671160E 00	0.29900779E 00	-0.36946983E 00
32	0.10000000E 01	0.	0.10000000E 01	0.	0.10000000E 01	0.
33	0.93997215E 00	-0.14268887E 00	0.86207719E 00	-0.20056483E 00	0.82096164E 00	-0.19983037E 00
34	0.81866782E 00	-0.42791934E 00	0.58511616E 00	-0.60026634E 00	0.46106953E 00	-0.59772949E 00

CHECK EIGENVALUES AND EIGENVECTORS

0.17131411E-02 -0.72322613E-03 0.15157343E-02 0.25352235E-05 0.73881400E-03 -0.14774981E-03
0.56287563E-03 -0.28860138E-03 0.32688941E-03 -0.83572584E-04 0.30281033E-03 0.47084308E-06

	COLUMN 1	COLUMN 2	COLUMN 3	COLUMN 4	COLUMN 5	COLUMN 6
1	0.37643246E-02	0.80705214E-02	-0.13083320E 00	-0.17352760E 00	-0.21181730E-02	0.26283908E-02
2	0.19656688E-02	0.29771524E-02	-0.43331964E-01	-0.57166746E-01	-0.19431128E-03	0.40958770E-03
3	0.79181268E-03	0.17373510E-03	0.43627420E-02	0.63471592E-02	0.67432320E-03	-0.72228903E-03
4	-0.31688567E-03	-0.16344179E-02	0.34632277E-01	0.46853012E-01	0.92815921E-03	-0.13255430E-02
5	-0.13218208E-02	-0.23693795E-02	0.46845133E-01	0.63555696E-01	0.64085568E-03	-0.14495436E-02
6	-0.21969895E-02	-0.21788688E-02	0.44511490E-01	0.61157243E-[illegible]	0.50030750E-04	-0.13086947E-02
7	-0.28948261E-02	-0.10320759E-02	0.27739424E-01	0.39757658E-01	-0.73467962E-03	-0.93643329E-03
8	-0.34236948E-02	0.95860236E-03	-0.11769996E-02	0.23554921E-02	-0.16167234E-02	-0.38783649E-03
9	-0.39333042E-02	0.35423889E-02	-0.38202462E-01	-0.45605153E-01	-0.26603028E-02	0.28077369E-03
10	-0.51691101E-02	0.79435459E-02	-0.10312490E 00	-0.12928887E 00	-0.50162424E-02	0.13653763E-02
11	-0.14536116E-02	-0.33906576E-02	0.50773126E-01	0.65384245E-01	-0.92103785E-03	0.24626847E-02
12	-0.22198861E-02	-0.26426594E-02	0.40414094E-01	0.53456627E-01	-0.14364189E-02	0.19181583E-02
13	-0.28237358E-02	-0.18346710E-02	0.29860959E-01	0.41471681E-01	-0.42864583E-02	0.36461597E-02
14	-0.20512051E-02	-0.93737788E-02	0.72615539E-01	0.73729641E-01	-0.11394273E-01	0.27736206E-01
15	-0.19560598E-02	-0.86473603E-02	0.60781228E-01	0.65925885E-01	-0.20862995E-01	0.32560526E-01
16	-0.18772853E-02	-0.70791391E-02	0.46234502E-01	0.56523032E-01	-0.28316727E-01	0.33799345E-01
17	-0.31302900E-02	-0.17253515E-01	0.10164457E 00	0.84709743E-01	-0.27030310E-01	0.63705970E-01
18	-0.15281886E-02	-0.15943345E-01	0.86066433E-01	0.82227008E-01	-0.45993001E-01	0.71092009E-01
19	0.51591613E-03	-0.14905820E-01	0.75914971E-01	0.86677627E-01	-0.64144961E-01	0.77745723E-01
20	-0.44211985E-02	-0.25379448E-01	0.13177532E 00	0.96696640E-01	-0.45135170E-01	0.10283366E 00
21	-0.96908354E-03	-0.23961305E-01	0.11418581E 00	0.10101121E 00	-0.74989231E-01	0.11453961E 00
22	0.24460176E-02	-0.22564246E-01	0.96701038E-01	0.10527774E 00	-0.10477092E 00	0.12631468E 00
23	0.16786183E-01	0.26610732E-02	-0.39861909E-02	-0.27472326E-01	0.18891216E-01	-0.45003408E-03
24	0.16421817E-01	0.71617020E-02	-0.18660712E-01	-0.43179245E-01	0.18709104E-01	-0.81183412E-03
25	0.69122624E-02	0.16207665E-01	-0.56213467E-01	-0.73580721E-01	0.10535564E-01	0.11186672E-02
26	0.27406729E 00	-0.18580301E-01	0.26669874E 00	-0.26273084E-01	0.27194723E 00	0.10405294E-01
27	0.23279707E 00	0.47209719E-01	0.18687098E 00	-0.20641387E-01	0.24293450E 00	-0.19278772E-01
28	0.16740651E 00	0.18146087E 00	0.43751754E-01	-0.76792125E-02	0.20242986E 00	-0.80041261E-01
29	0.62018515E 00	-0.17005892E-01	0.61905642E 00	-0.15774925E-01	0.61740253E 00	0.92729988E-02
30	0.54078007E 00	0.10627349E 00	0.47756577E 00	0.87178582E-02	0.56165861E 00	-0.51682081E-01
31	0.38014037E 00	0.35120611E 00	0.19321877E 00	0.57069036E-01	0.44759079E 00	-0.17294509E 00
32	0.10000000E 01	0.16024681E-09	0.10000000E 01	0.14353787E-10	0.10000000E 01	0.14492589E-08
33	0.87357331E 00	0.17244074E 00	0.79020289E 00	0.38871112E-01	0.90711847E 00	-0.91033105E-01
34	0.62077890E 00	0.51668162E 00	0.37065931E 00	0.11646090E 00	0.72057235E 00	-0.27305756E 00

	COLUMN 7	COLUMN 8	COLUMN 9	COLUMN 10	COLUMN 11	COLUMN 12
1	-0.92504975E-03	0.93262222E-03	0.18041862E-02	-0.58767274E-03	-0.24300627E 00	-0.11772163E 00
2	0.31762384E-04	0.26616188E-03	-0.36181460E-03	-0.11642730E-03	0.58044307E-01	0.24089233E-01
3	0.43283244E-03	-0.96723764E-04	-0.11493986E-02	0.14723365E-03	0.15177264E 00	0.73441510E-01
4	0.48695703E-03	-0.31201121E-03	-0.10846431E-02	0.29295996E-03	0.13384647E 00	0.65815777E-01
5	0.24318340E-03	-0.35442113E-03	-0.46234126E-03	0.27227053E-03	0.39891023E-01	0.19834347E-01
6	-0.16587866E-03	-0.23513230E-03	0.17347059E-03	0.66193522E-04	-0.60632182E-01	-0.28551936E-01
7	-0.67999191E-03	0.49847129E-04	0.45225609E-03	-0.98979372E-04	-0.11749825E 00	-0.55895023E-01
8	-0.12574041E-02	0.46278147E-03	0.90906630E-04	0.97637173E-04	-0.95320099E-01	-0.45805660E-01
9	-0.19643033E-02	0.91927980E-03	-0.10716343E-02	0.53684196E-03	0.53858645E-02	0.39521818E-02
10	-0.37408987E-02	0.15384384E-02	-0.46023489E-02	0.12742026E-02	0.27471348E 00	0.13530632E 00
11	0.11486693E-03	-0.71762861E-03	0.50539232E-02	0.67170595E-02	0.34317655E-01	0.15199224E-01
12	-0.29949489E-03	-0.40477574E-03	0.20945614E-02	-0.19574110E-02	-0.43880626E-01	-0.25747040E-01
13	-0.43841636E-03	-0.29026713E-03	0.80554839E-02	-0.13118583E-01	-0.10513201E 00	-0.63007412E-01
14	-0.37548815E-03	-0.30231203E-02	0.42979086E-01	0.47544483E-01	0.47492289E-01	0.98204744E-02
15	0.52147430E-03	-0.29929553E-02	0.55440819E-01	-0.26875626E-01	0.24942660E-01	-0.46997355E-01
16	0.13792341E-02	-0.26566803E-02	0.63716828E-01	-0.98244805E-01	-0.31704383E-02	-0.99862379E-01
17	-0.81478865E-03	-0.62127151E-02	0.10017049E 00	0.10563966E 00	0.72357753E-01	0.79172781E-02

18	0.17225058E-02	-0.62436510E-02	0.12723211E 00	-0.58798207E-01	0.11993883E 00	-0.67376600E-01
19	0.45226913E-02	-0.63416453E-02	0.15393302E 00	-0.22202824E 00	0.21417902E 00	-0.11886922E 00
20	-0.10389786E-02	-0.95998119E-02	0.16520948E 00	0.16316877E 00	0.10139602E 00	0.62531884E-02
21	0.32153178E-02	-0.98977481E-02	0.21267430E 00	-0.95305719E-01	0.23375024E 00	-0.84449741E-01
22	0.74576566E-02	-0.10197321E-01	0.26031623E 00	-0.35359403E 00	0.36606868E 00	-0.17611666E 00
23	0.19174331E-01	0.28182762E-03	0.22431251E-01	-0.14608828E-02	-0.14713282E-01	-0.23840352E-01
24	0.19738233E-01	-0.11182890E-02	0.19771925E-01	-0.25049075E-02	0.27567043E-01	-0.17716990E-02
25	0.12680259E-01	-0.87201233E-03	0.61059595E-02	-0.60174196E-03	0.10695563E 00	-0.42034919E-01
26	0.26672877E 00	0.17823589E-01	0.28883806E 00	0.21928976E-01	0.28696246E 00	-0.56215993E-02
27	0.24994495E 00	-0.31519362E-01	0.23519382E 00	-0.45374561E-01	0.24532552E 00	-0.53379213E-01
28	0.23429433E 00	-0.13254073E 00	0.14473862E 00	-0.18331261E 00	0.17523204E 00	-0.15301578E 00
29	0.61254319E 00	0.15702065E-01	0.63305537E 00	0.19603308E-01	0.64782142E 00	0.93919049E-03
30	0.57997976E 00	-0.82248144E-01	0.53760814E 00	-0.11630879E 00	0.53220940E 00	-0.12311946E 00
31	0.51189137E 00	-0.27741979E 00	0.34497288E 00	-0.38671102E 00	0.29900775E 00	-0.36946987E 00
32	0.10000000E 01	0.35264014E-08	0.10000000E 01	0.68221209E-09	0.10000000E 01	0.18497447E-11
33	0.93997211E 00	-0.14268900E 00	0.86207720E 00	-0.20056466E 00	0.82096171E 00	-0.19983097E 00
34	0.81866740E 00	-0.42791915E 00	0.58511584E 00	-0.60026543E 00	0.46106928E 00	-0.59772946E 00

$1/k_r = 1.00$

MODE	OMEGA (CPS)	DAMPING	VELOCITY (KNOTS)
1	0.75547063E 02	-0.42216393E 00	0.37464703E 03
2	0.80316100E 02	0.16725060E-02	0.39829726E 03
3	0.11503940E 03	-0.19998281E 00	0.57049433E 03
4	0.13179774E 03	-0.51272719E 00	0.65360096E 03
5	0.17294732E 03	-0.25566096E 00	0.85766673E 03
6	0.17969287E 03	0.15541400E-02	0.89111472E 03

$1/k_r = .666$

MODE	OMEGA (CPS)	DAMPING	VELOCITY (KNOTS)
1	0.80208381E 02	0.17403223E-02	0.26491021E 03
2	0.93454539E 02	-0.26253529E 00	0.30865928E 03
3	0.11795854E 03	-0.10386371E 00	0.38959047E 03
4	0.14495671E 03	-0.31769228E 00	0.47875933E 03
5	0.17988941E 03	-0.16137299E-03	0.59386994E 03
6	0.20905074E 03	-0.42664878E 00	0.69044749E 03

$1/k_r = .500$

MODE	OMEGA (CPS)	DAMPING	VELOCITY (KNOTS)
1	0.80334597E 02	-0.71199755E-02	0.19919449E 03
2	0.93887853E 02	-0.24628489E 00	0.23280061E 03
3	0.11683951E 03	-0.33438035E-01	0.28971064E 03
4	0.15019281E 03	-0.31823869E 00	0.37241216E 03
5	0.17953335E 03	0.17229238E-02	0.44516381E 03
6	0.23403285E 03	-0.14656305E-01	0.58220227E 03

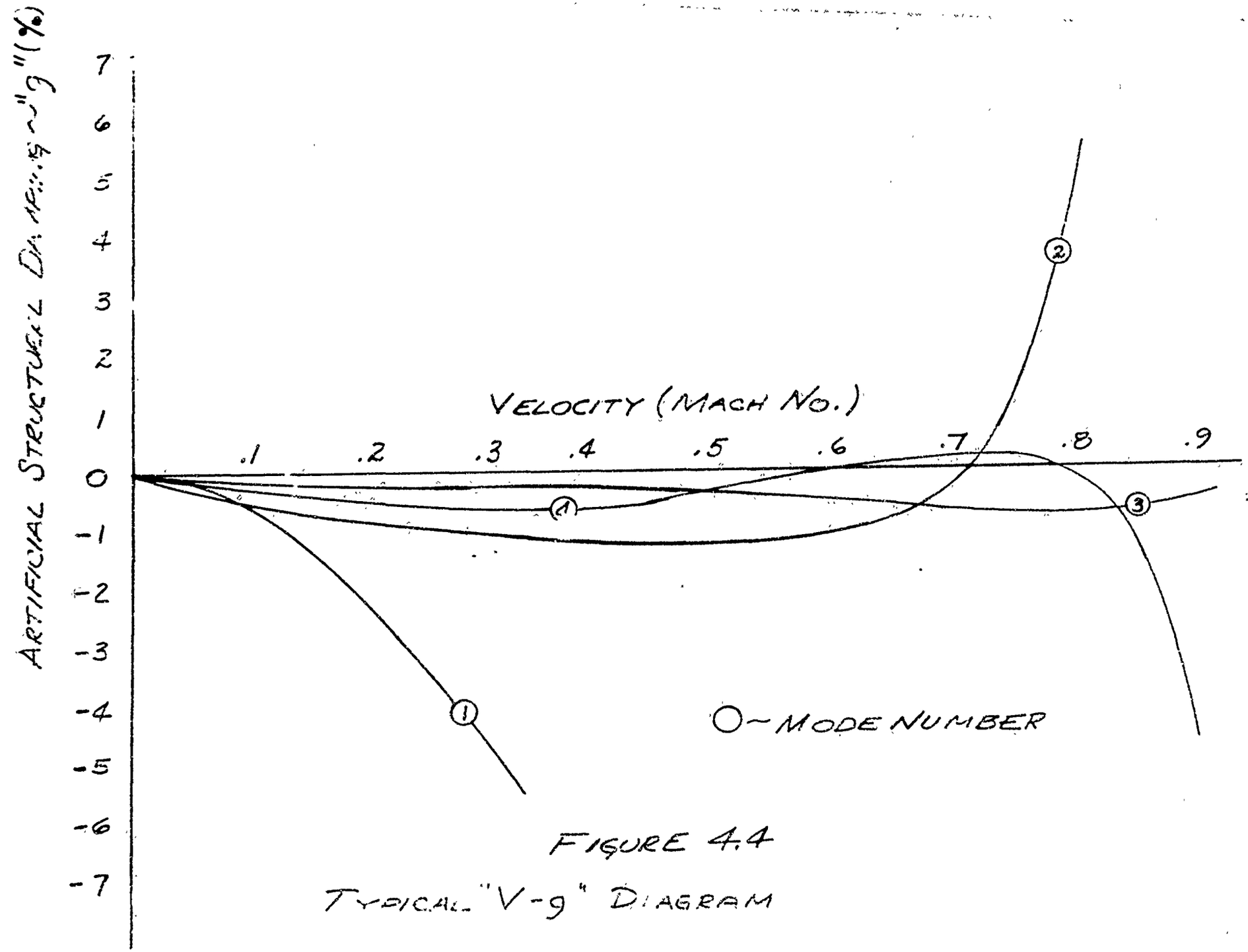

FIGURE 4.4

TYPICAL "V-g" DIAGRAM

PART V - REFERENCES

1. W. P. Rodden, "A Matrix Appraoch to Flutter Calculations," Rept. NA-56-1070, 1 May 1956, North American Aviation, Inc.; published later as "A Matrix Approach to Flutter Analysis," Fairchild Fund Paper No. FF-23, May 1959, Institute of the Aeronautical Sciences.

2. W. P. Rodden, "On Vibration and Flutter Analysis With Free-Free Boundary Conditions," Journal of the Aeronautical Sciences, Vol, 28, 1961, pp 65-66.

3. C. E. Watkins, D. S. Woolston, and H. J. Cunningham, "A Systematic Kernel Function Procedure for Determining Aerodynamic Forces on Oscillating or Steady Finite Wings at Subsonic Speeds," Tech Rept. R-48, 1959, NASA.

4. P. T. Hsu, "Calculation of Pressure Distributions for Oscillating Wings of Arbitrary Planform in Subsonic Flow by the Kernel Function Method, Part I," Tech. Rept. 64-1, 1957, MIT, Aeroelastic and Structures Research Laboratory.

5. H. T. Vivien and L. V. Andrew, "Unsteady Aerodynamics for Advanced Configurations, Part I - Application of the Subsonic Kernel Function to Nonplanar Lifting Surfaces," Rept. FDL-TDR-64-152, Part I, 1965, Air Force Flight Dynamics Laboratory.

6. W. S. Rowe, "Collocation Method for Calculating the Aerodynamic Pressure Distributions on a Lifting Oscillating in Subsonic Compressible Flow," Proceedings of the AIAA Symposium on Structural Dynamics and Aeroelasticity, Boston, 1965, pp. 31-45.

7. M. T. Moore and A. C. Park, "Unsteady Aerodynamics for Missile Wings and Control Surfaces," Rept. SID 65-1254, March 1966, North American Aviation, Inc.

8. L. V. Andrew, "Unsteady Aerodynamics for Missile Wings and Control Surfaces," Rept. NA 67-574, 15 September 1967, North American Aviation, Inc.

9. E. R. Rodemich and L. V. Andrew, "Unsteady Aerodynamics for Advanced Configurations, Part II - A Transonic Box Method for Planar Lifting Surfaces," Rept. FDL-TDR 64-152, Part II, May 1965, Air Force Flight Dynamics Laboratory.

10. S. Pines, K. Dugundji, and J. Neuringer, "Aerodynamic Flutter Derivatives for a Flexible Wing with Supersonic and Subsonic Edge," Journal of the Aeronautical Sciences, Volume 22, No. 10, October 1955.

11. G. Zartarian and P. T. Hsu, "Theoretical Studies on the Prediction of Unsteady Supersonic Airloads on Elastic Wings, Parts I and II, Tech. Rept. 56-97, 1955, Wright Air Development Center.

12. M. T. Moore and L. V. Andrew, "Unsteady Aerodynamics for Advanced Configurations, Part IV - Application of the Supersonic Mach Box Method to Intersecting Planar Lifting Surfaces," Rept. FDL-TDR 64-152, Part IV, May 1975, Air Force Flight Dynamics Laboratory.

13. J. C. Evvard, "Use of Source Superposition Distributions for Evaluating Theoretical Aerodynamics of Thin Finite Wings at Supersonic Speeds," Rept. 951, 1950, NACA.

UNCLASSIFIED
Security Classification

DOCUMENT CONTROL DATA - R & D

(Security classification of title, body of abstract and indexing annotation must be entered when the overall report is classified)

1. ORIGINATING ACTIVITY *(Corporate author)*
HUGHES AIRCRAFT COMPANY, MISSILE SYSTEMS DIVISION
FALLBROOK AND ROSCOE BLVDS.
CANOGA PARK, CALIFORNIA 91304

2a. REPORT SECURITY CLASSIFICATION
UNCLASSIFIED

2b. GROUP

3. REPORT TITLE
COLLOCATION FLUTTER ANALYSIS STUDY

4. DESCRIPTIVE NOTES *(Type of report and inclusive dates)*
FINAL REPORT (MARCH 1968 THROUGH MARCH 1969)

5. AUTHOR(S) *(First name, middle initial, last name)*
DYNAMICS AND ENVIRONMENT SECTION, DONALD R. ULBRICH

6. REPORT DATE
APRIL 4, 1969

7a. TOTAL NO. OF PAGES

7b. NO. OF REFS

8a. CONTRACT OR GRANT NO.
N00019-68-C-0247

b. PROJECT NO.

c.

d.

9a. ORIGINATOR'S REPORT NUMBER(S)

9b. OTHER REPORT NO(S) *(Any other numbers that may be assigned this report)*

10. DISTRIBUTION STATEMENT
~~IN ADDITION TO SECURITY REQUIREMENTS WHICH APPLY TO THIS DOCUMENT AND MUST BE MET, EACH TRANSMITTAL OF THIS DOCUMENT OUTSIDE THE AGENCIES OF THE U.S. GOVERNMENT MUST HAVE PRIOR APPROVAL OF THE COMMANDER NASC~~

11. SUPPLEMENTARY NOTES

12. SPONSORING MILITARY ACTIVITY
NAVAL AIR SYSTEMS COMMANDS
DEPARTMENT OF THE NAVY
WASHINGTON, D.C.

13. ABSTRACT

THIS STUDY COVERS THE DEVELOPMENT OF A SET OF COMPUTER PROGRAM TO PERFORM FLUTTER ANALYSIS BY THE COLLOCATION METHOD. WHILE THIS METHOD HAS BEEN KNOWN FOR SOME TIME, ONLY RECENTLY HAVE ADVANCES IN COMPUTER TECHNOLOGY MADE THE METHOD TECHNICALLY AND FINANCIALLY FEASIBLE. THE INGREDIENTS OF A COLLOCATION FLUTTER ANALYSIS ARE 1) A FLEXIBILITY MATRIX, 2) AERODYNAMIC INFLUENCE COEFFICIENT MATRIX, AND 3) AN EIGENVALUE SOLUTION. THIS STUDY IS PRESENTED IN FOUR VOLUMES. VOLUME I CONTAINS A GENERAL PROGRAM DISCUSSION. VOLUME II CONTAINS THE PROGRAM FLUBNC WHICH CALCULATES THE FLEXIBILITY MATRIX. VOLUME III CONTAINS A SET OF THREE PROGRAMS TO CALCULATE AERODYNAMIC INFLUENCE COEFFICIENTS FOR SUBSONIC, TRANSONIC, AND SUPERSONIC FLIGHT REGIMES. VOLUME IV CONTAINS THE PROGRAM COFA WHICH SETS UP AND SOLVES THE FLUTTER EIGENVALUE MATRIX.

DD FORM 1 NOV 65 1473

UNCLASSIFIED
Security Classification

UNCLASSIFIED
Security Classification

14 KEY WORDS	LINK A ROLE	LINK A WT	LINK B ROLE	LINK B WT	LINK C ROLE	LINK C WT
FLUTTER						
VIBRATION						
AERODYNAMIC INFLUENCE COEFFICIENTS						

UNCLASSIFIED
Security Classification