UNCLASSIFIED

AD NUMBER

AD857603

NEW LIMITATION CHANGE

TO

Approved for public release, distribution unlimited

FROM

Distribution authorized to U.S. Gov't. agencies and their contractors; Administrative/Operational Use; 30 APR 1969. Other requests shall be referred to Assistant Chief of Staff for Force Development, Attn: Army, Washington, DC 20310.

AUTHORITY

AGO., D/A ltr, 29 Apr 1980

THIS PAGE IS UNCLASSIFIED

THIS REPORT HAS BEEN DELIMITED
AND CLEARED FOR PUBLIC RELEASE
UNDER DOD DIRECTIVE 5200.20 AND
NO RESTRICTIONS ARE IMPOSED UPON
ITS USE AND DISCLOSURE.

DISTRIBUTION STATEMENT A

APPROVED FOR PUBLIC RELEASE;
DISTRIBUTION UNLIMITED.

DEPARTMENT OF THE ARMY
OFFICE OF THE ADJUTANT GENERAL
WASHINGTON, D.C. 20310

IN REPLY REFER TO

AGAM-P (M) (1 Aug 69) FOR OT UT 692286 7 August 1969

SUBJECT: Operational Report - Lessons Learned, Headquarters, 815th Engineer Battalion, Period Ending 30 April 1969

AD847603

SEE DISTRIBUTION

1. Subject report is forwarded for review and evaluation in accordance with paragraph 5b, AR 525-15. Evaluations and corrective actions should be reported to ACSFOR OT UT, Operational Reports Branch, within 90 days of receipt of covering letter.

2. Information contained in this report is provided to insure appropriate benefits in the future from lessons learned during current operations and may be adapted for use in developing training material.

BY ORDER OF THE SECRETARY OF THE ARMY:

Kenneth G. Wickham

KENNETH G. WICKHAM
Major General, USA
The Adjutant General

1 Incl
as

SEP 3 1969

DISTRIBUTION:
Commanding Generals
US Continental Army Command
US Army Combat Developments Command
Commandants
US Army War College
US Army Command and General Staff College
US Army Engineer School

Copies furnished:
Office, Chief of Staff, US Army
Deputy Chiefs of Staff
Chief of Research and Development
Assistant Chiefs of Staff
Chief of Engineers
Commanding General, US Army Flight Training Center
Commandant of the Marine Corps
Defense Documentation Center

UNCLASSIFIED REPORT
DISTRIBUTION NO FOREIGN WITHOUT APPROVAL OF ASSISTANT CHIEF OF STAFF FOR FORCE DEVELOPMENT (ARMY) ATTN FOR OT UT. WASHINGTON, D.C. 20310

Protective marking cancelled when separated from inclosure.

28

DEPARTMENT OF THE ARMY
Headquarters, 815th Engineer Battalion (Construction)
APO 96318

EGCE-OP

30 April 1969

SUBJECT: Operational Report of the 815th Engineer Battalion (Construction) for the Period Ending 30 April 1969, RCS CSFOR - (65) (RI).

THRU: Commanding Officer
937th Engineer Group (Combat)
APO 96318

Commanding General
18th Engineer Brigade
APO 96377

Commanding General
United States Army, Vietnam
ATTN: AVHGC-DST
APO 96375

Commander-in-Chief
United States Army, Pacific
ATTN: GPOP-DT
APO 96558

To: Assistant Chief of Staff For Force Development
Department of the Army (ACSFPR-DA)
Washington, D.C. 20310

Protective Markings Cancelled on
30 April 1972

FOR OT UT
692286

Inclosure

EGCE-OP 30 April 1969
SUBJECT: Operational Report of the 815th Engineer Battalion (Construction) for the Period Ending 30 April 1969, RCS CSFOR (65) (RI).

Section I: Operations: Significant Activities

1. General

a. Organizational: The 815th Engineer Battalion (Construction) is attached to the 937th Engineer Group (Combat) and has a conventional relationship with the parent unit. The battalion is presently organized as shown in Inclosure 1.

b. Mission: The 815th Engineer Battalion (Construction) has been assigned the following missions by the 937th Engineer Group (Combat):

(1) To provide operational support as directed.

(2) To construct lines of communications and other facilities as directed.

(3) To operate and secure Webb Quarry, Pleiku, RVN.

(4) To operate and secure former RMK facilities, Pleiku, RVN.

(5) To operate the Kontum Asphalt Plant.

(6) To operate and secure the Tactical Operations Base in the vicinity of road junction LTL 7B-QL-14S.

c. Personnel Administration, Morale and Discipline:

(1) Personnel: The average present for duty strength of the battalion and its units remained within the range of 76.9 percent to 96.3 percent, with an average of approximately 86.4 percent. At the present time, this battalion is employing 90.5 percent of the Local Nationals authorized by TDA and the reduced TO&E.

(2) Morale and Discipline:

(a) Morale was high during this quarter due to full utilization of R&R programs and due to the continued improvement of cantonment facilities.

(b) Disciplinary problems during the quarter were limited largely to curfew and off-limits violations and failure to repair. During the report period there were one summary court and 19 special courts-martial.

(c) The battalion movie, located in a maintenance tent, is well attended. In addition, two other movies are located within walking distance. Special services facilities, including a tape center, photo lab, and slot car track, have increased morale within the battalion. The Central Engineer Hill Officer, NCO and EM clubs are well attended.

EGCE-OP 30 April 1969
SUBJECT: Operational Report of the 815th Engineer Battalion (Construction) for the Period Ending 30 April 1969, RCS CSFOR (65) (RI).

(d) Religious services are provided at the Engineer Hill Chapel. There are one (1) Catholic and two (2) Protestant Services on Sunday mornings and both Catholic and Protestant services on Sunday evenings. Jewish personnel and those of other religious sects are provided information regarding, and the opportunity of attending, their own services when available. A weekly Protestant Bible Study Class is conducted every Wednesday evening. During the quarter, the battalion was without an assigned chaplain for approximately one month. During this period, spiritual ministrations and counseling were shared by the chaplains of the 937th Engineer Group (Combat) and the 20th Engineer Battalion (Combat). The new Battalion Chaplain arrived on 8 March 1969. During the quarter, the chaplain conducted thirteen (13) Sunday services with a total attendance of nine hundred forty-nine (949) persons and thirty-five (35) weekday devotionals and/or informal services with an attendance of four hundred sixty-five (465) persons. Special services held were Maunday-Thursday Communion, Easter Sunrise Service, and one Memorial Service. In the area of Character Guidance instruction and orientations, one thousand one hundred eighty (1180) persons were accounted for as having Character Guidance. The Chaplain visited the 71st Evacuation Hospital weekly the Battalion Dispensary daily, and Battalion job sites weekly. He was also available for counseling day and night and counseled ninety-five (95) persons during the quarter.

(e) The Battalion's A&R facilities are being fully utilized. All companies have day rooms, basketball and volleyball courts (three of the courts are equipped with lights) and horseshoes included in their atholtic facilities. In addition, pool tables are located in all company dayrooms. The companies are continuing to receive both magazines and paperback books on a regular basis.

d. Intelligence and Counterintelligence: The Battalion has continued processing the required personnel security clearances during this report period. Spot reports have been submitted on all verified and probable enemy contacts. Daily liaison was made with the S2 section, 937th Engineer Group (Combat) for current local intelligence data, and daily briefings were held in the Battalion Tactical Operations Center (TOC) for company operations personnel and representatives from the battalion staff sections.

2. Plans and Operations:

a. General

(1) During this report period, primary emphasis was placed on Lines of Communication Maintenance and Upgrading, Base Development, Tactical Security and Operations Facilities and the operation of the Webb Quarry Crusher Complex.

(2) The 268th Engineer Detachment (Well Drilling/Core Drilling) was attached to the Battalion during the last half of this report period. No problems were encountered in the attachment of this unit.

b. Operational Support: No combat support missions were assigned this unit although continuous equipment/operator support and material support was provided the other battalions of the 937th Engineer Group (Combat) to assist in

EGCE-OP 30 April 1969
SUBJECT: Operational Report of the 815th Engineer Battalion (Construction) for the Period Ending 30 April 1969, RCS CSFOR - (65) (R1).

the accomplishment of assigned mission. The following operational support missions have been undertaken by this unit during the report period:

(1) PKSAC Logistical Support Facilities:

(a) Pleiku Tank Farm - Primary effort for this facility was the construction of chain link standoff fences around 5-10,000 BBL POL storage tanks. Effort during the report period consisted of drilling 225 holes-8 feet deep, notching and placing 206 telephone poles, placing and bolting 206-16'x6"x6" cross braces, installing 5300 feet of chain link fence, using 1600 feet of tie wire for securing overlapping fence sections and placing 87 U-shaped pickets to prevent lateral movement at bottom of fence. In addition, a guard tower was constructed and drainage improved on the facility's perimeter. Construction is scheduled for completion during the next report period.

(b) POL Tanks, Camp Holloway - Primary effort for this facility is the scheduled construction of chain link standoff fences around 3-3000 BBL POL storage tanks. Effort consisted of drilling 44 holes and placing 12 "deadman" anchors. Construction is scheduled for completion during the next report period.

(c) Ammo Supply Point, Pleiku - Primary effort for this facility was the construction of a 4.2 mile pioneer perimeter road and drainage upgrading. 4170 C.Y.'s of fill was hauled, graded and compacted and 145 meters of 18 inch culvert and 30 meters of 24 inch culvert was assembled and installed.

(2) Minimum Essential Requirements (MER):

(a) 62nd Maintenance Battalion Area: 1 each- 2 head shower started and completed. 1 each- 3 hole latrine completed.

(b) 88th S&S Battalion Area: 1 each- 4 head shower started and completed.

(c) Camp Holloway: Hauled and compacted 450 C.Y.'s of fill for shower and latrine pads.

c. Construction: During this report period, the following projects were completed, or are in progress:

(1) Lines of Communication (LOC) Maintenance and Upgrading: During this report period, this battalion concentrated its primary effort on LOC maintenance and upgrading. Upgrading of QL-19E from Pleiku to the Mang Giang Pass was completed, resulting in a highly efficient and reliable east-west route through the Central Highlands. Effort consisted of hauling, placing, grading and compacting 81,799 C.Y.'s of fill on existing roadway and shoulders. In addition, 22.8 KM of roadway (double lane) was machine paved, 8.3 KM of ditches reworked and approximately 30 meters of culvert installed.

It had been scheduled that upgrading of QL-14N from Pleiku to Dak To would be more than two-thirds completed at the end of this report period. However enemy action greatly curtailed scheduled effort. On the evening of 22 March 1969,

EGCE-OP 30 April 1969
SUBJECT: Operational Report of the 815th Engineer Battalion (Construction) for the Period Ending 30 April 1969, RCS CSFOR - (65) (RI).

Wooly Bully TOO, the Kontum Asphalt Plant location, came under enemy mortar, rocket and sapper attack resulting in the total destruction of the asphalt plant. This required the procurement of a new asphalt plant, which was eventually obtained from the New Pleiku Air Base. Maximum effort during the latter part of this report period was therefore directed toward disassembling the Air Force Plant relocating it to the Kontum area, re-assembling the plant and trouble-shooting the system. Full operation was attained near the end of this reporting period. Although paving operations were not continuous during the report period, earthwork operations continued comparatively on schedule. Effort during the report period consisted of hauling 55,800 C.Y.'s of fill for widening and compacting the existin roadway. In addition, 15.47 KM of roadway (double lane) was machine paved, 3.09 KM of roadway (double lane) was paved using the blade lay technique, ditches were cut and upgraded for a distance of 9.6 KM and 25 meters of culvert were assembled and installed. Project completion is scheduled during the next report period.

The Pleiku Bypass, intended to relieve traffic congestion on QL-14 through Pleiku City, is nearing completion. Effort during the report period consisted of hauling, placing and compacting 1145 C.Y.'s of rock and 24,280 C.Y.'s of fill on existing roadway. In addition, 9.98 KM of roadway (double lane) was paved using the blade lay technique, 10.4 KM of ditches were reworked, 9 headwalls formed and 125 C.Y.'s of concrete placed for headwalls and 175 meters of culvert assembled and installed. Construction is scheduled for completion during the next report period.

Recently, this battalion has been directed to expand its LOC upgrading to include QL-14S and LTL-7B. To support this future effort, an eventual distance of 154 KM, a Tactical Operations Base in the vicinity of road junction 7B-14S is under construction. Eventually to be the site of a quarry, crusher and asphalt plant complex, one construction company began site preparation near the end of the period. Future planning includes relocation of the 102nd Engineer Company (CS) and the 585th Engineer Company (Dump Truck) to the new quarry. It is to be named the Weigt-Davis Quarry in memory of two men killed in the attack on the Kontum Asphalt Plant. During this report period, 25 acres of land were cleared and work was begun on access roads. Operation of the Weigt-Davis Quarry is scheduled to commence during the next report period.

(2) Webb Quarry Crusher Operations: To support the battalion in its vast LOC program, Webb Quarry was instrumental in providing the much needed rock for the production of hot mix asphalt (3/4" and fines), for roadway base course material (3") and in the production of concrete for drainage headwalls (1½"). During the report period, 93,789 Cubic Yards of rock was produced. Average production was 1190 C.Y.'s per day of operation. Approximately 85% of the rock was issued for LOC and other roadway upgrading programs, hardstands, and other construction projects such as asphaltic concrete and portland cement concrete. 11,251 C.Y.'s of 3" rock, 2495 C.Y.'s of 1½" rock, 1008 C.Y.'s of 3/4" rock, and 196 C.Y.'s of manufactured fines were on hand at the end of this reporting period.

(3) Operation of the Construction Industrial Area (Bn Class IV Yard) Concrete Batch Plant and Asphalt Plant Site: During this report period, 37,353 tons of asphalt were produced. Of this total, 4,799 tons were issued to the Air Force as a result of the agreement to borrow their plant for use in Kontum. Approximately 90% of the asphalt produced was utilized on LOC upgrading projects. In

EGCE-OP 30 April 1969
SUBJECT: Operational Report of the 815th Engineer Battalion (Construction) for the Period Ending 30 April 1969, RCS CSFOR - (65) (RI).

addition, 1520 C.Y.'s of concrete were produced to be used in building pads, headwall construction and other associated construction.

(4) Operational Requirements: Many projects were started and completed during this report period: Timber Trestle Bridge: Built approach ramps requiring hauling, grading and compacting of 1470 C.Y.'s of fill and 230 C.Y.'s of rock, applying 2000 gallons of poneprime and blade laying 0.18 KM of asphalt. 815th Hq Co Mess Hall: Excavated 65 C.Y.'s of earth for a sump and drainage ditch and filled same with 60 C.Y.'s of rock. Constructed top for grease trap, installed in-out flow pipes and covered entire trap with membrane. Co C Commo Bunker: Rebuilt present facilities requiring the erection of 26 columns, placing 1500 board feet of 2x12 siding, erecting 20 joists, filling and placing 2500 sandbags and installing 8 each light fixtures. CIA Yard: Upgraded perimeter fence requiring the replacing of 70 posts and placing 8 C.Y.'s of concrete. Repair of perimeter lighting required 1000 feet #2 Wire, 27 lamps, 1 fixture and 6 fuses. In addition, 2 electric motors were installed, two hot oil heaters were rewired and connected, relocated a transformer and connected generators. Webb Quarry: Connected 200 KW generator and installed transformer for motor pool and a water pump. 25 feet of 1 inch conduit w/100 feet of romex cable was required. Made minor electrical repairs requiring 100 feet of #4 wire and the replacement of 61 bulbs. NCO Club: Electrical installation required 300 feet of romex cable, 12 electric junction boxes, 90 feet of #4 wire and 4 flourescent fixtures. Asphalt Plant: Replaced motor and installed new generator. Engineer Hill Perimeter: Performed electrical upgrading using 4000 feet of #2 wire, 42 housing knobs, 14 light fixtures and 30 racks. In addition, foliage between perimeter wire was burned, placed 30 rolls of concertina fastened with 50 pickets, rebuilt one bunker and assembled and placed 34 feet of 30 inch culvert, 30 feet of 18 inch culvert and 20 feet of 48 inch culvert. Barrel Farm: Constructed a 72 square foot loading platform. Co C Day Room: Replaced canvas roof with corrugated sheet metal utilizing 216 linear ft of 2x4 lumber and 90 sheets of 2'x6' tin. Engineer Hill Swimming Pool: Installed water storage tank with plumbing, added 25 C.Y.'s of fill to pool base, and made minor repairs on damaged liner. Engineer Hill Dispensary: Installed 15 flourescent fixtures. Electrical: Minor electrical repairs were conducted in the 937th Group Security Platoon, Co A, Co C, Co D, HHC and 102nd Co (CS) areas requiring the installation of a total of 2 utility poles, 1100 feet of #2 wire, 32 flourescent fixtures, 2 floodlights, a service entrance, 300 feet of #10 wire and 50 feet of Romex Cable.

(5) Ammo Storage Facility, Pleiku: Hauled, spread, shaped and compacted 14,820 C.Y.'s of fill to complete the construction of 16 protective berms Additional work accomplished was the placing of a 30 inch culvert and the placing of 3 C.Y.'s of concrete for two (2) headwalls.

(6) Autosevocom: A parking lot was constructed with 20 C.Y.'s of asphalt. Building facilities were completed and transferred to the Sub-Area Engineer.

(7) Dial Central-Dragon Mountain: Project was completed and equipment installation begun by the using unit. Finishing touches included the installation of a trap door and the construction of 110 feet of tarred gutters with down spouts. Facility was transferred to the Sub-Area Engineer.

EGCE-OP 30 April 1969
SUBJECT: Operational Report of the 815th Engineer Battalion (Construction) for the Period Ending 30 April 1969, RCS CSFOR - (65) (RI).

(8) Aircraft Maintenance Facilities-Camp Holloway: Completed the placement and erection of all structural steel. Fastened 22,000 linear feet of 2x4 purlins and 52,600 square feet of corrugated sheet metal siding and installed 12 rolling doors to complete the exterior of the structure. The construction of interior shops and offices and the installation of electrical facilities have been initiated and are scheduled for completion during the next report period.

(9) Water Supply Facilities: Work on MACV "Get Well" facilities included the drilling of three (3) wells, placing one (1) prefabbed pump house, one (1) pump, one (1) chlorinator, one (1) storage tank and constructing one (1) water tower.

(10) Water Well Fill Points: Construction was completed and turned over to the using unit. Final construction required the installation of two (2) chlorinators and two (2) pumps.

(11) Power Distribution System - Log Depot: Project was completed to include all internal hook-ups. Strung and sagged 500 feet of #2 AWG wire and made service drops connecting the POL Farm, ASP and various facilities in Log Deppt.

(12) Cantonment and Miscellaneous Facilities, Pleiku: Much of the work under these two project directives was accomplished in the Log Depot, Artillery Hill, Camp Wilson, Camp Hollpway and Engineer Hill areas. 62nd Maint Building: Completed concrete slab, footer and grease pit, erected columns and prefabricated roof trusses. Electrical facilities were also installed. 937th Engr Gp Security Platoon Billets: Completed one building and placed and erected wall panels and roof trusses on the second building. 167th Signal Bn: Constructe pad for orderly/supply building and formed floor slab. Log Center Chapel - Construction completed to include installation of stained glass windows, window louvers, trim and staining of exterior. Project involved the construction of an "A" frame design chapel with adjoining fellowship hall requiring 50 C.Y.'s of concrete for footers and the floor slab, 2020 linear feet of 2x siding, 1500 square feet of roofing metal and 100 sheets of mahogany paneling. 330th EM Billets: The nearly completed construction of 3 buildings required the forming of building pads, placing concrete and erecting trusses and wall panels with roofing and siding. Electrical installations are presently being made. 62nd Maint Bn, Tire Shop: Concrete slab was placed, wall panels and framing erected and corrugated roofing placed. Log Center Service Club: Construction of service club was completed to include stage platform and exterior patio. Camp Holloway BOQ's: Four buildings were completed and one building requires the installation of electrical facilities. Remaining BOQ's are scheduled for completion during the next reporting period. Camp Holloway Wash Racks: Two (2) wash racks were started and completed. Maintenance Shops-Camp Holloway: Two (2)-2 bay maintenance shops were started. Work consisted of preparing sub-base, pouring floors and erection of building frames and placing roofing. Facilities are scheduled for completion during the next report period. 43rd Signal Battalion Maintenance Building: Work consisted of preparing subbase, pouring floor, vertical construction and installation of electrical for one (1)-4 bay maintenance shop. Camp Wilson Wash Racks: Work consisted of preparing sub-base, pouring pads and

plumbing installation for six (6) wash racks. For the above projects approximately 1050 C.Y.'s of concrete, 18,600 CY's of fill, 150 C.Y.'s of 3" minus rock, 1200 feet of #1/0 wire and 850 feet of #2/0 wire was used.

(13) Tactical Security and Operations Facilities: Artillery Hill Security Lighting: Work consisted of erecting 7 poles, placing 14 anchor connections, framing 11 poles, mounting 14 secondary racks and sagging 11,000 feet of secondary wire. Facility was completed and transferred to the Sub-Area Engineer. Artillery Hill Power Distribution System: Drilled 84 holes, framed and set 84 poles, ran 50 down guys, set 28 anchors and ran, strung and sagged 36,100 feet of wire. In addition, 4 generator pads were prepared and 25 C.Y.'s of concrete placed. Project was completed and transferred to the Sub-Area Engineer. Perimeter Upgrading: During this report period, perimeter upgrading was performed at installations including the Class IV Yard, Engineer Hill, and Webb Quarry. Work consisted of placing 3000 feet of barbed wire, upgrading existing guard bunkers and constructing one new guard tower.

(14) DMBC Support Facilities: Formed and placed slab and grease pit for a 4 bay maintenance shed requiring 47 C.Y.'s of concrete. Completed the electrical wiring of four maintenance buildings. Hauled, spread and compacted 4550 C.Y.'s of fill and 935 C.Y.'s of rock, assembled and installed 80 feet of 18 inch culvert and applied 5800 gallons of peneprime in the construction of a hardstand for the 4th S&T Yard. 5251 S.Y.'s of hardstand was paved with asphalt.

(15) Interim Reefer Complex: Constructed 30 linear feet of reefer shed. Remaining 34 feet are to be constructed during the next report period.

(16) Installation Storage Warehouses: Made preliminary electrical installations. Completion is scheduled during the next report period.

(17) Christmas Tree Heliport: Excavated and formed headwalls for 4-48 inch culverts, 6-36 inch culverts and 4-24 inch culverts. 50 C.Y.'s of concrete was placed for headwalls.

(18) 2400 Man Cantonment: Continued work on 5200 square foot Bn HQ's building. Work consisted of the erection of wall panels, trusses, roofing, siding and the installation of electrical facilities. Exterior construction consisted of the placing of concrete for 10 door pads, 2 sets of steps, and the construction of 270 feet of duck walk. D Co Orderly Room: The construction of D Co's orderly room was started and completed. Canvas roofing on existing building was replaced with corrugated sheet metal.

(19) 71st Evacuation Hospital Revetments: Fabricated 300 revetment panels. Self-help personnel were utilized to accomplish the construction and filling of 1200 linear feet of 3 foot wide revetments.

(20) Aviation Support Facilities, DMBC: Completed hook-up of electrical facilities requiring 2100 feet of conduit and 5800 feet of wiring with necessary receptacles, boxes and electrical fixtures.

EGCE-OP 30 April 1969
SUBJECT: Operational Report of the 815th Engineer Battalion (Construction) for the Period Ending 30 April 1969, RCS CSFOR - (65) (RI).

(21) Electrical Upgrading: The upgrading of electrical facilities required 3,250 feet of wiring, 140 receptacles, and 86 fixtures for Camp Holloway and 2225 feet of wire, 41 receptacles and 41 fixtures for Artillery Hill.

(22) DS Maintenance Facility: Prepared pad for the construction of an 81x303 warehouse. Pad required hauling, grading and compacting 1260 C.Y.'s of fill.

(23) Log Depot, Maintenance and ASP Facilities: 62nd Maint Bn Storage Building: Built up pad, excavated for and placed concrete for the construction of 24 footers and a 40x100 slab. 75 C.Y.'s of concrete was required Hauled, spread and compacted 450 C.Y.'s of fill for pad and placed 15 C.Y.'s of concrete for a 20x100 slab and erected wall panels. Truck Terminal: Hauled and compacted 200 C.Y.'s of fill for tire shop, and started construction of a 20'x50' facility to include sub-base preparation, placing concrete for floor and erecting building frame and placing tin on roof. Facilities are scheduled for completion during the next reporting period.

d. Logistics: The Engineer Class IV yard of this battalion handled an average of 75 tons of issued and received material daily. This included bulk totals of 20,000 bags of cement, 15,000 barrels of asphalt products and approximately 3½ million board feet of lumber. The operation of the Kontum Asphalt Plant necessitated a daily delivery rate of 280 barrels. Additionally, approximately 1,500 separate items of engineer supplies were received, stored and issued by the S4 section. Other battalions and separate units, ARVN units, and various civic action programs received continued support. Included in civic action support was the distribution of empty asphalt barrels, salvaged lumber, packing crates and damaged or broken bags of cement. Improvement to the Class IV yard included perimeter upgrading repairs and electrical upgrading. The Class IV yard was hit by a wind and hail storm which completely destroyed the cement warehouse. A new 40'x140' warehouse is presently under construction under the PA&E replacement construction program. Critical shortages of 1"x6", 1"x8" and 1"x10" lumber have prevented completion of several projects; no apparent sizeable resupply exists in country.

Equipment received included 1 Curb Extruder, 2 Hopkins Hot Oil Heaters, 1 Chicago-Pneumatic Track Drill, 1 Tractor with Backhoe, 2 Hyster Segmented Compactors, 1 Hyster Vibratory Roller (Towed), 1 Hyster Vibrator Roller (Self-Propelled), 2 RayGo Vibratory Rollers (Self-Propelled), 1 Mars Rotary Sweeper 1-600 CFM Air Compressor, 4 Caterpiller Tractors, 1 Rotary Sweeper (Towed), and 1 International Asphalt Distributor which were issued to individual companies of this battalion.

e. Maintenance: The battalion was successful in maintaining the critical deadline rate at about five percent(5%) while the overall deadline rate averaged about four percent(4%). A major problem has been a shortage of engineer equipment repair parts. This shortage resulted in a delay in removing certain items of equipment from deadline. To partially solve this problem, vehicles scheduled for retrograde were frequently used to obtain needed critical parts. (In order to do this, close coordination had to be maintained with the retrograde facility and effective monitoring procedures had to be used.. In addition, a

shortage of maintenance personnel was alleviated only at the end of the reportin period.

f. Civic Action: The battalion civic action team increased its activit during the period. The team distributed educational materials, clothes, toys, health aids, agricultural kits and carpenter kits and assisted in the constructi of dependent housing facilities, water towers, burnout latrines etc., at nearby ARVN compounds and various villages. In addition, classes were given on health, first aid, farming, cattle and hog care and in the use and maintenance of U.S. made tools and equipment. The Battalion Surgeon, three medics, and the civic action team provided much medical assistance to local villages and the city of Pleiku.

g. Vietnamese - American Relations and Joint Projects: Pleiku Bypass: During this report period, the ARVN portion of the Pleiku Bypass was officially opened. The 815th Engineer Battalion (Const) rendered support to the ARVN engineers on the 4.4 KM section of roadway for which the ARVN's had responsibile ity. Equipment support included scarifying and compacting equipment for earth-work and 1.2 KM of roadway was blade paved with asphalt from the Battalion CIA Yard. In addition, 2400 C.Y.'s of rock was issued to the ARVN's for LOC upgrading. Equipment Support: The 20th ARVN Engineer Group provided equipment support during this report period. A crane was provided for use at the Webb Quarry Crusher Operations and dump truck support was rendered in support of the CIA Yard Asphalt Plant.

Crusher Operations: Local National Crews render daily assistance at the Webb Quarry/Crusher Complex. Various crews are employed daily and consist of a drilling crew (for blasting), dump truck operators, and a crusher operations crew.

General Construction: The 815th Engineer Battalion (Const) employs Local National Crews consisting of more than 500 skilled and semi-skilled laborers. Among the various crews employed by this battalion are carpenter, electrical, plumbing, concrete, forming, asphaltic paving and crusher operators which render invaluable assistance on many projects assigned to and constructed by this battalion.

EGCE-OP 30 April 1969
SUBJECT: Operational Report of the 815th Engineer Battalion (Construction) for the Period Ending 30 April 1969, RCS CSFOR - (65) (RI).

Section II: Lessons Learned

1. Correction of Warped Structural Steel Parts:

a. Problem: In the recent construction of a pre-engineered 175ft x 190 ft Aircraft Maintenance Hangar, numerous structural steel members were found to be warped or bent. This damage was attributed to enemy rockets, careless storage with members having been "placed" on top of each other, and carelessness in unloading the members. The use of a blow torch and a highly trained operator seemed to be the obvious solution but these resources were not available. It was also concluded that the intense heat could effect the strength of the member as well as representing a tedious and time consuming process.

b. Solution: It was found that by blocking up the steel members at the damaged areas and using the bucket on a front loader, the bucket being full of sand, the members could be accurately bent back into their original shape. The bucket was placed over the critical point of damage and then lowered by power, therefore loading the beam and bending it back to its desired shape. By moving the blocking to various locations on the member, compound bends could be repaired.

2. Installation of Rolling Doors on Maintenance Hangars:

a. Problem: The installation of heavy rolling doors across the front of a recently completed pre-engineered maintenance hangar required the use of railroad type rails which were not available. Various types of structural steel were considered to obtain the proper load carrying capability as well as guide forms. Angle iron of the appropriate dimension was suggested to be placed on top of a steel channel imbedded in a concrete footer as was indicated by the original design. However, the proper materials were not available. Thus, an alternate solution had to be found.

b. Solution: The "U" shaped picket was found to have the proper profile for good track and roller alignment. A concrete footer was placed exercising strict control on developing a finished surface of uniform elevation. A heavy plate of ½ inch steel was then cut, welded and anchored to hold and support the rail. A line was then obtained to indicate the centerline of the track assembly. The railing itself consisted of a drill rod circumscribed inside the "U" shaped picket to carry the vertical load. This assembly was in turn welded to steel plate proving to be a very effective substitute for railroad railing. See sketch, Incl 2.

3. Sand Mix versus Fines Mix in Asphalt Plants.

a. Statement: Though not a problem, this battalion in the past has had the occasion to use both sand and manufactured fines in the production of its asphaltic concrete. The use of fines [illegible] necessitated as a result of sand convoys being unable to keep the asphalt plant resupplied and sand convoys being restricted as to the number of hauls they could make on a daily basis. An evaluation of the comparative merits of these two asphaltic concrete mixes as observed in our production is given in paragraph (b).

//

EGCE-OP 30 April 1969
SUBJECT: Operational Report of the 815th Engineer Battalion (Construction) for the Period Ending 30 April 1969, RCS CSFOR - (65) (RI).

b. Evaluation: The properties of the asphalt produced vary quite noticeably with a change in the type of fines used (manufactured fines or sand). Such quantities as mixing times, asphalt content, laydown times, and stability are related to, and dependent upon, the type of fines used. In general, a sand mix is more uniform in that properties of the mix do not vary greatly with each load of sand. However, it should be noted that varation in the dust content between loads of manufactured fines do affect the asphalt product. a) Mixing times - Normal sand mix production is approximately 100 tons per hour as compared with 75 tons per hour for a fines mix, indicating a decrease in mixing times for sand mixes. b) Asphalt content - Usually the AP-3 content is 5% to 5.5% by weight when using sand. A fines mix requires an AP-3 content of 6.5% to 7% by weight. The presence of a higher percentage of dust particles in the manufactured fines increases the surface area of particles that must be coated. This makes an increased AP-3 content necessary when using manufactured fines in producing asphaltic concrete. c) Laydown times - The time required to place the two types of mixes is about the same. However, an excessive amount of dust in a manufactured fines mix will result in an increase in the time required to roll the final product. d) Stability - Although the stability of a normal sand mix meets specifications, that of a good fines mix is usually 1½ - 2 times as high. In conclusion, it appears that greater stability is obtained from a fines mix but is accomplished by an increase in asphalt content and an increase in mixing and rolling times. The determining factor will of course be the availability of materials and LOC construction must be planned accordingly, based on what the unit considers the most important characteristics in its asphaltic concrete production

4. Expedient Finish Rolling of Asphaltic Pavement:

a. Problem: Quite often, convoy traffic makes paving operations on short sections of roadway quite dangerous and difficult. Recently, while working on QL-19E, the laydown crew began to roll a section of roadway with a rubber tire roller when a convoy started through the area. The area was somewhat restricted and after several "close calls", the paving operation equipment was removed from the road. A solution for finish rolling the road while convoys were present was definitely needed.

b. Solution: To insure proper compaction, the crew wetted the road section thoroughly with water and opened it to convoy traffic (after breakdown rolling by a steel wheel). Inspection of the section later disclosed that this was an excellent expedient for rolling short streches of asphalt pavement. It is hoped that in the future when it is known that convoys will be passing the paving operations area, equipment can be moved off the roadway, thus decreasing the possibility of an accident, and convoy compaction used as expedient asphalt pavement rolling on these short sections.

5. Changing Insulators on Low Voltage Power Systems Against the Strain of the Conductor:

a. Problem: It quite often becomes necessary to change insulators that have become damaged or broken on secondary racks of a power distribution or

security lighting system. Quite often, considerable time and manpower is wasted by having to relieve tension in the wire and then resagging the wire. Occasionally, the wire must be cut and then reconnected with split bolt connectors.

b. Solution: Through the use of two chain hoists (Coffin Hoists) and four-wire grips, a very effective operation for changing insulators can be attained. The wire grips and hoists should be arranged as shown on inclosure 3, making sure the wire grips are a minimum of 3 feet from the pole. As the hoists are turned, tension will be loosened in power cable, thereby releasing the pressure on the insulators. When enough slack has been obtained, the rod can be easily lifted from the rack and insulators removed from the rod. After replacing all damaged insulators with new ones, the hoists can then be released to their original positions.

6. Cutting of Corrugated Tin:

a. Problem: During the recent construction of a 175'x190' pre-fabricated aircraft maintenance hangar, the problem of cutting approximately 5% of the 50,000 square feet of corrugated tin for roofing and siding was encountered. Numerous pieces required detailed cuts for proper fitting and alignment around the structural members of the hangar. It seemed it would be both tedious and impractical to cut the tin in the conventional manner using either shear cutters or some sharp instrument such as an axe blade.

b. Solution: The use of a pneumatic circular saw (Skill Saw) proved to be an efficient solution. It was found by placing the blade backwards in the saw, (therefore causing the curved part of the blade rather than the jagged part of the blade to do the cutting) a uniform and clean cut could be made. Time saved over the conventional method of cutting tin was in excess of 70% and in addition, waste was eliminated as all cuts performed were as desired.

7. Civil Affairs:

a. Problem: Because the battalion is centered in a densely populated area and because it employs more local nationals than any similar size unit in the central highlands, a vigorous civic action program is required to ensure local good will. The battalion is not authorized by TOE to maintain a civic action team.

b. Solution: Other resources were drawn down to provide a 5 member civic action team headed by a commissioned officer. This team has done much toward maintaining good will in the area. Of particular note is the fact that the team has recently managed to produce tangible benefits for the battalion as a result of its efforts. Notable in this respect is the loan of an armored personnel carrier by a local ARVN unit after the battalion civic action team assisted in construction of ARVN dependent housing. The APC is of great value in the current development of a tactical operating base at the new quarry the battalion is now opening. Further, the team has gained much useful information as to enemy activity from local nationals taking advantage of frequent MEDCAPS. Though the current shortage of engineer officers is becoming acute, the use of an officer as S5 pays enough dividends to justify continuing such a procedure.

EGCE-OP 30 April 1969

SUBJECT: Operational Report of the 815th Engineer Battalion (Construction) for the Period Ending 30 April 1969, RCS CSFOR - (65) (RI).

G. Greater Efficiency for Dump Truck Companies:

a. Problem: The 585th Engineer Company (Dump Truck) was specifically attached to the 815th Engineer Battalion (Construction) for the purpose of haulin materials in the support of this battalion's LOC effort. The hauling of much needed sand and rock for the production of asphalt has been its primary mission. Even so, material hauling by the 585th has on occasion represented the limiting factor in overall paving production. In analyzing this problem, it has become apparent that the "culprit" is the frequent delays in loading at material stockpiles, resulting in a net decrease in total daily trips. As dump truck support i critical in any LOC effort, a solution must be obtained to assist in the rapid accomplishment of their mission.

b. Solution: Scoop loaders are essential to the accomplishment of any dump truck mission. By authorizing one scoop loader and one low bed with tractor per platoon by TOE, the effectiveness of dump truck companies could greatly be increased. With scoop loaders organic to the dump truck company, unnecessary delays will not occur while trucks wait for the arrival of a scoop loader from a support unit. The front loader will always be present at the loading site. In addition, the dump truck company can itself shift the front loader to the location for loading as determined by mission priority, thus decreasing the time delay for coordination of equipment to several sites. On occasion, when more than one scoop lodaer was made available for sand hauls (and this occurred very rarely) the results were extremely benefical. It is hoped that some thought will be given to authorizing scoop loaders for dump truck companies and experience will show its advantages. In addition, as new MCA front loaders arrive in the command one will be attached to the 585th Dump Truck Company. Results will be reported in the next quarterly report.

EGCE-OP 30 April 1969
SUBJECT: Operational Report of the 815th Engineer Battalion (Construction) for the Period Ending 30 April 1969, RCS CSFOR - (65) (RI)

SECTION III: Commanders Observation

1. MCA Equipment: During this reporting period, much of the long awaited and highly touted off-the-shelf civilian construction equipment began to arrive. In spite of some initial frustrations due to minor "bugs", temporary parts and literature shortages, and unusually heavy "command interest", first indications are that the equipment will definitely improve both the quantity and the quality of LOC construction in Vietnam. In some cases, in fact, MCA equipment arrived in the nick of time and spelled the difference between continued asphalt production and plant shutdown. The use of a new MCA Hopkins hot oil heater to replace a defective Hi-Way heater on the asphalt plant that we borrowed from the Air Force is a case in point.

Extolling the virtues of equipment whose abilities had already been proven in the civilian construction industry is hardly necessary; however, a significant (and on my part, at least, totally unforseen) advantage may be seen in the impression the MCA equipment has made on the officers and men of the battalion. On the part of many junior officers, particularly some who have worked in the civilian construction industry, there are indications of increased faith in the military system in general and the Corps of Engineers in particular. This cannot help but improve retention rates for qualified young officers. On the part of the troops, there is great pride in being designated operators of a monstrous yellow behemoth whose earth shaking presence is felt for some distance or whose waffle-like compacted path is mute testimony to its efficacy. Several recent extensions may be attributed, at least indirectly, to the presence of the MCA equipment.

2. Civilianization Program: The battalion has been organized under MTOE 5-118G for approximately six months, the intended effect of the MTOE being to replace military men with skilled civilians whenever practicable. Unfortunately, however, certain problems incident to operating under the civilianization program are worthy of note:

a. Working Hours: The typical local national works only during daylight hours and insists on his right to frequent local, national, and religious holidays. Thus, when critical skills are required at night or on civilian holidays, an entire operation may have to stop prematurely or continue inefficiently until skilled workers report for duty. It has already become apparent that it is impossible to function effectively when all slots for a particular skill are filled by civilians; the lesson learned being to maintain at least a skeleton crew of trained military personnel for each skill field to be used in emergencies.

b. Lack of Electricans: Of particular note with respect to the lesson noted in subparagraph 2a above is the fact that MTOE 5-118G authorizes no military electricans in the battalion. We have found however, that it is absolutely essential to maintain a crew of qualified electricans to provide responsive support for the myriad electrical systems we must maintain (e.g., two all-electric asphalt plants, three perimeter lighting systems, large rock crusher complexes, shops, and the like) and, on occasion, to perform new work not feasible for accomplishment by civilian employees. (As an example of the latter, civilian electricans refused to work off 40 foot high structural steel in a new hangar on the basis that their contracts didn't require it).

EGCE-OP 30 April 1969
SUBJECT: Operational Report of the 815th Engineer Battalion (Construction) for the Period Ending 30 April 1969, RCS CSFOR - (65) (RI).

c. Purely Military Duties: Because the requirement for security is continuous, the already heavy guard requirement increased for individual troops as the civilianization program took effect. At present, a man is expected to pull guard every second or third night, though he is given no free time to compensate.

d. Effect of Freeze on Hiring: Unfortunately, a directive freezing hiring of certain new civilian employees is now in effect at the same time as new MCA equipment arrives (along with the requirement for operators and additional support personnel). The problem is particularly acute for a unit which relocates (as did Delta Company during the report period). In such a case, old employees are usually reluctant to move and new employees cannot be hired, leaving the unit to accomplish its mission without sufficient manpower resources.

e. Quality of Civilian Effort: It is important to note that none of the above comments are intended to deprecate the efforts of our civilian employees. On the contrary, the civilians now employed by this battalion are performing their duties in an outstanding manner. Not only are they generally well trained in their particular fields, but also they provide a great deal of the continuity needed to offset the frequent military personnel changes.

3. Technical Consultants: In addition to the valuable services performed by locally hired civilians, there is yet another civilian crew whose exploits are generally unsung, but whose worth has been proven time and again in my battalion. I refer to most technical experts employed by Quinton Engineers, several of whom are quartered with my unit and others, who willingly come to the scene of a problem. They have become so much a part of this battalion that it is difficult to imagine operating some of our sophisticated equipment or plants without their sage advice. If there ever has been any doubt as to their efficacy or as to the advisability of perpetrating the policy of providing contract consultants, this brief mention of them will serve as a vote of confidence from at least one battalion commander.

4. Identification of Critical Personnel: For the past year, the attached 542nd Power Distribution Detachment has upgraded electric power supply in the Pleiku area and a continuing requirement exists for that type of effort. The original team was trained as a unit, arrived in the theater as a unit, and rotated to the states almost en masse. It was our understanding that filler personnel had been or were being trained at Ft. Belvoir for the 542nd and like teams. Quite by accident a man was assigned recently to the battalion with an electrician's MOS (note 2b above). The man advised us that he had attended the special course for power distribution, but there was no entry on his records to so indicate. Further checking revealed he had attended the course and, further, he identified another individual -- then being used as a jeep driver -- who had also attended the course, but whose records also did not reflect that fact. This experience has prompted us to request through responsible staff officers that all graduates of the course be traced, identified, and properly assigned. The lesson learned, however, is that personnel records should be carefully checked and posted before an individual leaves CONUS.

Along the same lines, a sorely needed maintenance warrant officer was recently assigned to the battalion and shortly thereafter was medically evacuated to Japan

EGCE-OP 30 April 1969

SUBJECT: Operational Report of the 815th Engineer Battalion (Construction) for the Period Ending 30 April 1969, RCS CSFOR - (65) (RI).

for a minor operation which could have and clearly should have been performed in CONUS prior to departing. The individual concerned had had the operation scheduled in the U.S., but when the military hospital concerned postponed the operation, his personnel section refused to postpone the port call. The net effect on my battalion, of course, is that we continue to be without the critical services of the individual concerned for another 30 to 60 days, but now we can't requisition a replacement because he is slated to return to the battalion.

5. Security: During this report period, most of the assets of an asphalt platoon were lost as a result of an enemy sapper attack. Most of the lessons learned will doubtless be detailed by the unit responsible for security at that location, but the largest single deterrent to such attacks is, in my opinion, an adequate perimeter lighting system. Barbed wire is easily penetrated, the enemy is an expert at neutralizing trip flares, and he moves with practiced stealth. Unless he can be seen attempting to penetrate a perimeter, it is entirely possible that he can penetrate it undetected (as was the case at the scene of the demise of our Kontum Asphalt Plant). In the establishment of our new quarry site, we are making every attempt to procure the necessary generators and other materials to provide a proper security lighting system.

6. Bulk Products: My battalion currently consumes 500 to 1000 bags of cement daily, 10,000 or more gallons of AP-3 and up to 5,000 gallons of other asphaltic products. This high consumption rate has existed for the past two years and will doubtlessly continue. While bulk shipment and storage of cement and asphalt products requires some high initial outlay, it would appear to be much more economical in the long run, particularly in areas where high consumption rates exist and are programmed to continue. It hardly seems necessary to point out that the frequent handling of cement in its long journey to the user causes phenomenally high losses due to broken bags, partial hydration, theft, and the like. The problem appears, at least to this observer, to be common in South Vietnam and the amount of money involved appears sufficiently large to justify study on the part, perhaps, of the Engineer Strategic Studies Group, the CDC Engineer Agency or some other similar organization.

CHARLES A. DEBELIUS
LTC, CE
Commanding

3 Incl
as

DISTRIBUTION:

5- CO, 937th Engr Gp (C), ATTN: EGC-OP, APO 96318
8- CG 18th Engr Bde, ATTN: AVBC-C, APO 96377
6- CG, USAECV (P), ATTN: AVCC-PO, APO 96491
3- CG, USARV, ATTN: AVEC-DH, APO 96375
2- CINCUSARPAC, ATTN: GPOP-IH, APO 96558
2- CINCUSARPAC, ATTN: GP-OT, APO 96558
1- CG, USAEC, ATTN: Historical Officer, USAES, Ft. Belvoir, Va 22060
12- 815th Engr Bn (Const), APO 96318

17

EGC-OP (30 April 69) 1st Ind
SUBJECT: Operational Report of the 815th Engineer Battalion (Const) for the Period Ending 30 April 1969 (RCS-CSFOR-65)

DA, HEADQUARTERS, 937TH ENGINEER GROUP (COMBAT), APO 96318, 22 May 1969

TO: Commanding General, 18th Engineer Brigade, ATTN: AVBC-OS, APO 96377

1. The Operational Report - Lessons Learned of the 815th Engineer Battalion (Construction) has been reviewed by this headquarters and is considered to be an excellent account of the 815th Engineer Battalion's activities during the reporting period ending 30 April 1969.

2. This headquarters concurs with all the observations and recommendations of the Battalion Commander.

W.G.KRATZ
COLONEL, CE
Commanding

AVBC-BC (30 Apr 69) 2nd Ind
SUBJECT: Operational Report of the 815th Engineer Battalion (Construction) for the Period Ending 30 April 1969, RCS CSFOR - 65 (R1)

DA, Headquarters, 18th Engineer Brigade, APO 96377 4 JUN 1969

TO: Commanding General, U.S. Army Vietnam, ATTN: AVHGC-DST, APO 96375

1. This headquarters has reviewed the Operational Report - Lessons Learned for the 815th Engineer Battalion (Construction) as indorsed by the 937th Engineer Group (Combat). The report is considered to be an excellent account of the Battalion's activities for the reporting period.

2. This headquarters concurs with the observations and recommendations of the Battalion and Group Commander, with the following exception:

Reference: Section II, paragraph 4. Nonconcur. Asphalt compaction by convoy traffic results in uneven compaction over the road surface. In addition rocks and dirt are carried onto and compacted into the relatively soft asphalt.

J. W. MORRIS
Colonel, CE
Commanding

CF:
937th Engr Gp
815th Engr Bn

AVHGC-DST (30 April 1969) 3d Ind
SUBJECT: Operational Report of the 815th Engineer Battalion (Construction) for the Period Ending 30 April 1969, RCS CSFOR-65 (R1)

HEADQUARTERS, UNITED STATES ARMY, VIETNAM, APO San Francisco 96375 21 JUN 1969

TO: Commander in Chief, United States Army, Pacific, ATTN: GPOP-DT, APO 96558

1. This headquarters has reviewed the Operational Report-Lessons Learned for the quarterly period ending 30 April 1969 from Headquarters, 815th Engineer Battalion (Construction).

2. Comments follow:

a. Reference item concerning lack of electricians, section III, paragraph 2b; concur. USARV forwarded a request for a pen-and-ink MTOE change to USARPAC asking for deletion of six (6) carpenters from MTOE 5-118G and authorization for six (6) electricians. Action is still pending on this request.

b. This headquarters notes that the basic ORLL is not submitted in the format required by AR 525-15 and USARV Regulation 525-15. Unit will be notified.

FOR THE COMMANDER:

W. C. ARNTZ
CPT, AGC
Assistant Adjutant General

Cy furn:
815th Engr Bn
18th Engr Bde

GPOP-DT (30 Apr 69) 4th Ind
SUBJECT: Operational Report of HQ, 815th Engineer Battalion (Construction) for Period Ending 30 April 1969, RCS CSFOR-65 (R1)

HQ, US Army, Pacific, APO San Francisco 96558 19 JUL 69

TO: Assistant Chief of Staff for Force Development, Department of the Army, Washington, D. C. 20310

1. This headquarters has evaluated subject report and forwarding indorsements and concurs in the report as indorsed.

2. Reference paragraph 2a, 3d Indorsement. Change to MTOE 5-118G was approved by Department of the Army in DA Message 910800, 292005Z May 1969. US Army, Pacific Message 21222, 060020Z June 1969, notified US Army, Vietnam of DA approval and pointed out the constraints pertaining to availability of qualified electricians.

FOR THE COMMANDER IN CHIEF:

D. A. Tucker

D. A. TUCKER
CPT. AGC
ASST AG

Cy furn:
CG USARV

Organization of the 815th Engineer Battalion (Construction).

a. The following units are presently assigned or attached to the battalion.

		TO&E
(1)	Headquarters and Headquarters Company (Construction)	5-116G
(2)	A Company (Equipment and Maintenance)	5-117G
(3)	B Company (Construction)	5-118G
(4)	C Company (Construction)	5-118G
(5)	D Company (Construction)	5-118G
(6)	102nd Engineer Company (Construction Support)	5-114D
(7)	49th Engineer Detachment (Well Drilling)	5-500C-Team GD
(8)	542nd Engineer Detachment (Power Line)	5-500C-Team HH
(9)	585th Engineer Company (Dump Truck)	5-142G

b. The following unit was attached to the battalion during this report period.

(1) 588th Engineer Detachment (Well Drilling/Core Drilling)

c. The following unit is under the operational control (OPCON) of the battalion.

(1) 509th Engineer Company (Panel Bridge) 5-77G

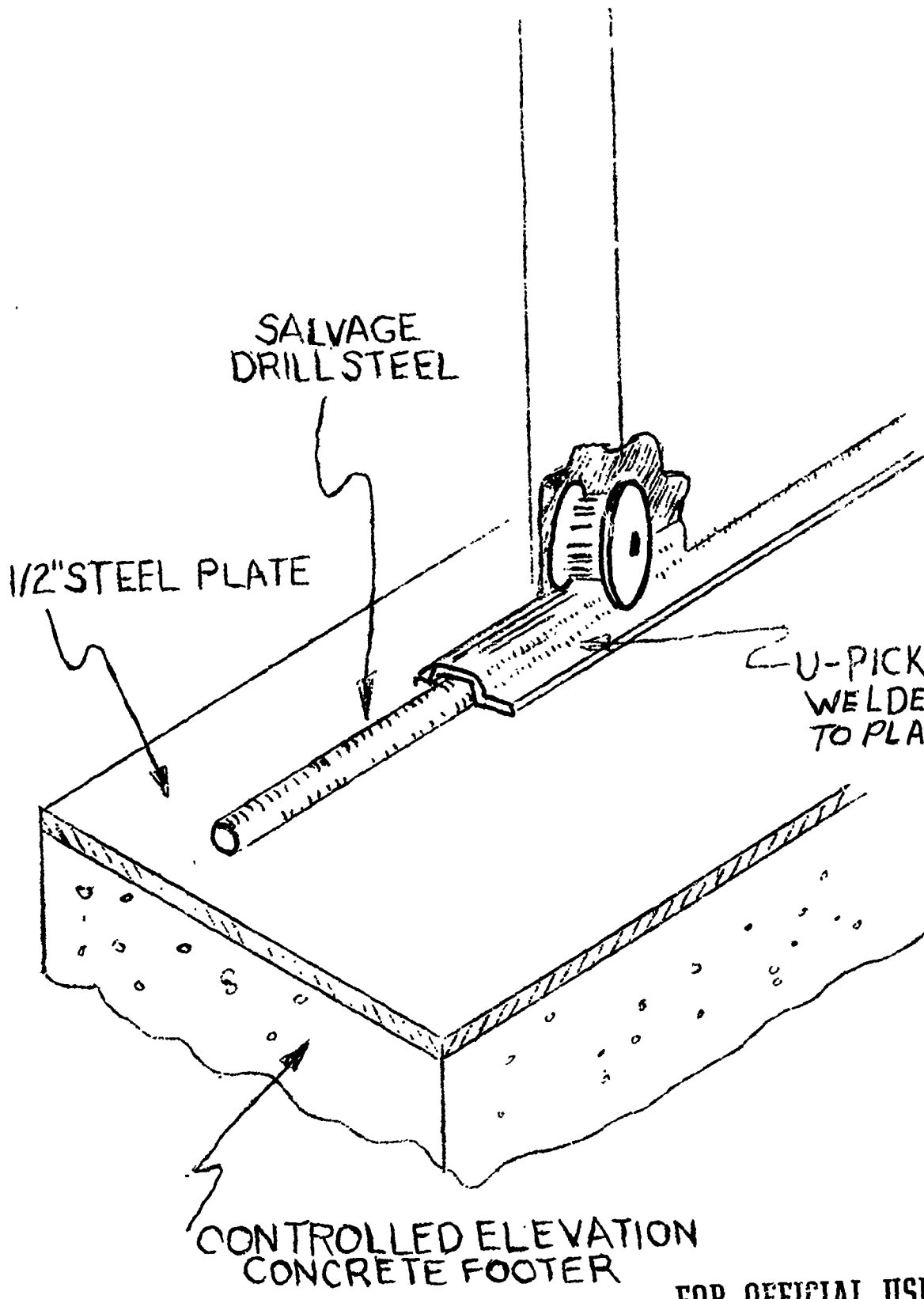
SALVAGE
DRILL STEEL
1/2" STEEL PLATE
U-PICKETS
WELDED
TO PLATE
CONTROLLED ELEVATION
CONCRETE FOOTER

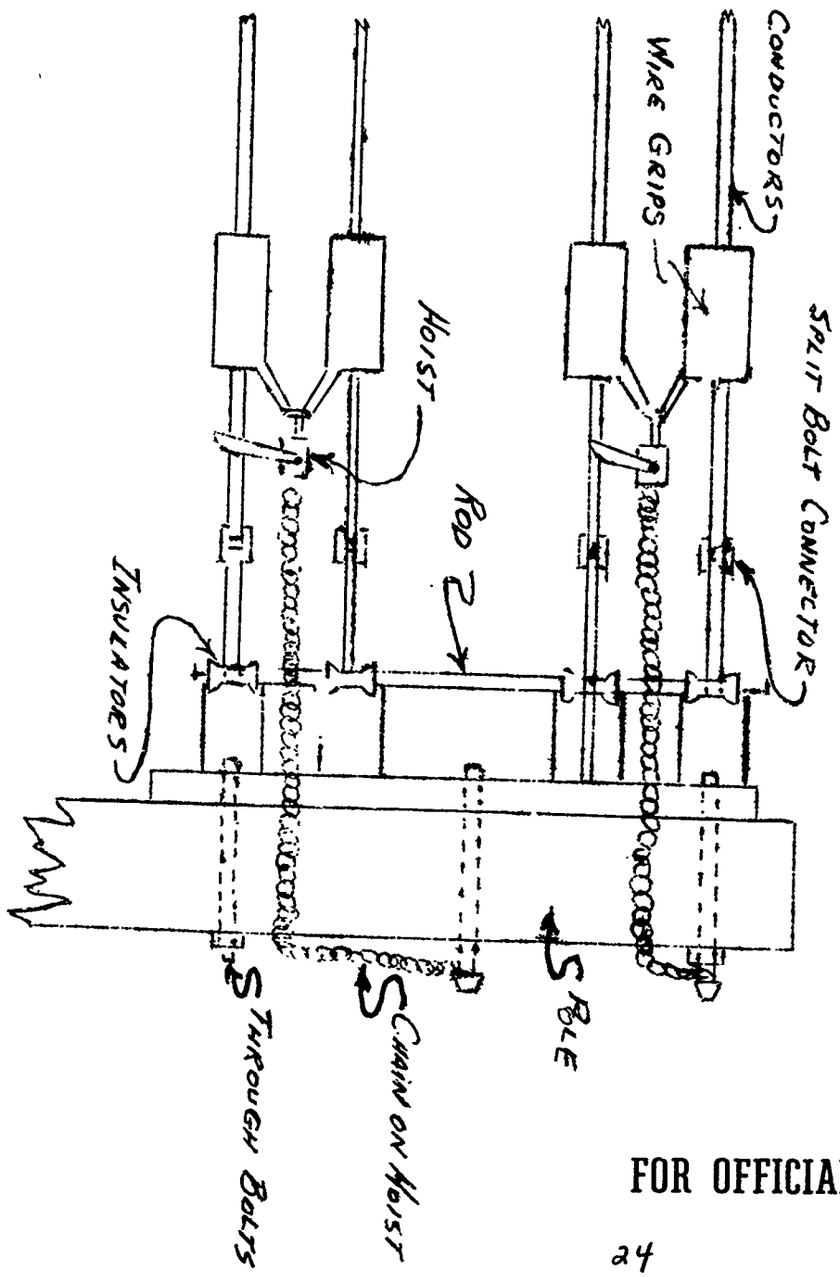
CONDUCTORS
WIRE GRIPS
SPLIT BOLT CONNECTOR
HOIST
ROD
INSULATORS
CABLE
CHAIN ON HOIST
THROUGH BOLTS

Inclosure 3

UNCLASSIFIED
Security Classification

DOCUMENT CONTROL DATA - R & D

(Security classification of title, body of abstract and indexing annotation must be entered when the overall report is classified)

1. ORIGINATING ACTIVITY *(Corporate author)* HQ, OACSFOR, DA, Washington, D. C. 20310	2a. REPORT SECURITY CLASSIFICATION FOR OFFICIAL USE ONLY 2b. GROUP FOUO Cancelled 30 April 1972

3. REPORT TITLE

Operational Report - Lessons Learned, Hq, 815th Engineer Battalion

4. DESCRIPTIVE NOTES *(Type of report and inclusive dates)*

Experiences of unit engaged in counterinsurgency operations, 1 Feb 69 to 30 Apr 69.

5. AUTHOR(S) *(First name, middle initial, last name)*

CO, 815th Engineer Battalion

6. REPORT DATE 30 April 1969	7a. TOTAL NO. OF PAGES 27	7b. NO. OF REFS
8a. CONTRACT OR GRANT NO. b. PROJECT NO. c. N/A d.	9a. ORIGINATOR'S REPORT NUMBER(S) 692286 9b. OTHER REPORT NO(S) *(Any other numbers that may be assigned this report)*	

10. DISTRIBUTION STATEMENT

11. SUPPLEMENTARY NOTES N/A	12. SPONSORING MILITARY ACTIVITY OACSFOR, DA, Washington, D.C 20310

13. ABSTRACT

25

DD FORM 1 NOV 65 1473

UNCLASSIFIED
Security Classification