UNCLASSIFIED

AD NUMBER
AD856774
LIMITATION CHANGES
TO: **Approved for public release; distribution is unlimited.**
FROM: **Distribution authorized to U.S. Gov't. agencies only; Administrative/Operational Use; 26 SEP 1968. Other requests shall be referred to Space and Missile Systems Organization, Los Angeles, CA.**
AUTHORITY
SAMSO per DTIC form 55

THIS PAGE IS UNCLASSIFIED

STDR B5-10-8

OPERATION and SERVICE MANUAL

AD856774

GEMINI B/MOL/L/V ELECTRICAL INTERFACE SUBSTITUTE

58E040504

Prepared for the

United States Air Force

by

MCDONNELL

STDR B5-10-8

DATE 26 SEPTEMBER 1968

OPERATION AND SERVICE MANUAL

FOR

GEMINI B/MOL/L/V

ELECTRICAL

INTERFACE

SUBSTITUTE

58E040504

EACH TRANSMISSION OF THIS DOCUMENT TO
THE AGENCIES OF THE US GOVERNMENT MUST HAVE
PRIOR APPROVAL OF THE OFFICE OF INFORMATION
(SMEA), SPACE & MISSILE SYSTEMS ORGANIZATION,
AF UNIT P.O., LOS ANGELES, CA. 90045

AD856774

PROJECT GEMINI B

AUG 20 1969

SUBMITTED UNDER Contract No. F04695-67-C-0023

[redacted]

P.O. Box 516 Saint Louis, Missouri 63166

MCDONNELL DOUGLAS CORPORATION

LIST OF EFFECTIVE PAGES

INSERT LATEST CHANGED PAGES. DESTROY SUPERSEDED PAGES.

NOTE: Latest PCN incorporated is _____ dated _____.

TOTAL NUMBER OF PAGES IN THIS PUBLICATION IS 51, CONSISTING OF THE FOLLOWING:

PAGE NO.	REVISION	DATED
Title		Original
i thru vi		Original
1-1 thru 1-11		Original
1-12 blank		Original
2-1		Original
2-2 blank		Original
3-1		Original
3-2 blank		Original
4-1 thru 4-9		Original
4-10 blank		Original
5-1 thru 5-7		Original
5-8 blank		Original
6-1 thru 6-3		Original
6-4 blank		Original
6-5 thru 6-10		Original

DOCUMENT STATUS INDEX

NOTE: This document has been updated to incorporate the following:

58E040504 - G/B to TIIIM Electrical Interface Substitute Assy EO Seq. 1

58D042021 - G/B to TIIIM Electrical Substitute Control and Monitor Panel Assembly

58D042022 - G/B to TIIIM Electrical Substitute Analog Monitor Panel Assembly - DCN Seq. B

58D042027 - G/B to TIIIM Electrical Substitute Digital Data Output Panel Assembly

58D042023 - G/B to TIIIM Electrical Substitute Cabinet Assembly - DCN Seq. A

INTRODUCTION

The purpose of ~~this Space Technical Data~~ Report (STDR) is to familiarize personnel with the operation and service of the Gemini B/MOL/L/V Electrical Interface Substitute, 58E040504. ~~This STDR~~ describes the console, associated panels and their functions. The console is used to electrically simulate the Gemini B Spacecraft when performing functional tests on the Gemini B/MOL Launch Vehicle.

TABLE OF CONTENTS

SECTION	TITLE	PAGE
	INTRODUCTION	iii
I	DESCRIPTION	1-1
	1.1 Description	1-1
	1.2 Related Equipment	1-9
	1.3 Facility Requirements	1-9
II	TEST EQUIPMENT AND SPECIAL TOOLS	2-1
	2.1 Test Equipment	2-1
	2.2 Special Tools	2-1
III	PREPARATION FOR USE, SHIPMENT AND STORAGE	3-1
	3.1 Preparation For Use	3-1
	3.2 Preparation For Shipment	3-1
	3.3 Preparation For Storage	3-1
IV	OPERATION	4-1
	4.1 Functions of Controls and Indicators	4-1
	4.2 Pre-Operational Validation	4-6
	4.3 Operation	4-7
V	PREVENTIVE MAINTENANCE AND CALIBRATION	5-1
	5.1 Preventive Maintenance	5-1
	5.2 Calibration	5-2
VI	LIST OF SUBASSEMBLIES AND DIAGRAMS	6-1
	6.1 List of Subassemblies	6-1
	6.2 Diagrams	6-2

LIST OF ILLUSTRATIONS

FIGURE	TITLE	PAGE
1-1	Gemini B/MOL/L/V Electrical Interface Substitute (58E040504)	vi
1-2	Digital Voltmeter (Y593440A/3443A)	1-3
1-3	Analog Monitor Panel (58D042022-1)	1-4
1-4	Control and Monitor Panel (58D042021-1)	1-6
1-5	PCM Simulator (2790-01-6-04-M4)	1-8
1-6	Blower Assembly (R2DB350A)	1-10
6-1	Wheel Diagram (Local Operation)	6-3
6-2	Wheel Diagram (Remote Operation)	6-5
6-3	Cabinet Cabling Diagram	6-6
6-4	Analog Monitor Panel Schematic	6-8
6-5	Control and Monitor Panel Schematic	6-9
6-6	Digital Data Output Panel Schematic	6-10

LIST OF TABLES

TABLE	TITLE	PAGE
4-1	Analog Monitor Panel Component Functions	4-1
4-2	Control and Monitor Panel Component Functions	4-3
4-3	Cable Entry Panel Control Functions	4-5
5-1	Preventive Maintenance Requirements	5-1
5-2	Signal Voltage to Indicator Scale Specifications	5-2
5-3	Signal Voltage and Scale Correlation Specifications (Stage 1)	5-3
5-4	Signal Voltage and Scale Correlation Specifications (Stage 2)	5-3
5-5	Signal Voltage to Indicator Scale Specifications	5-4
6-1	List of Subassemblies	6-1

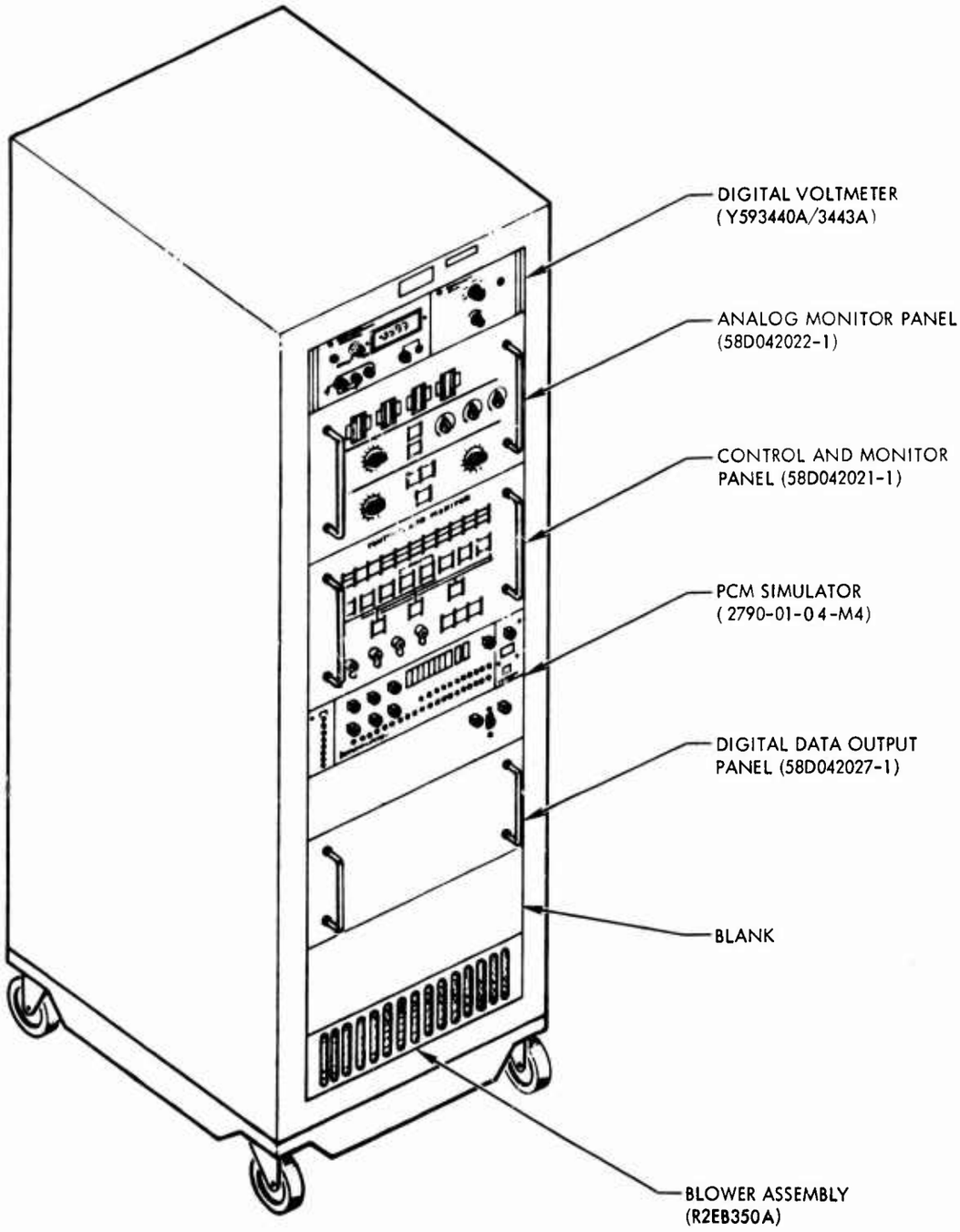

Figure 1-1 Gemini B/MOL/L/V Electrical Interface Substitute (58E040504)

SECTION I

DESCRIPTION

1.1 DESCRIPTION

The Gemini B/MOL/L/V Electrical Interface Substitute, 58E040504 (Figure 1-1), is designed for electrically checking the Titan IIIM Launch Vehicle without the presence of the Gemini B Spacecraft. The substitute generates and monitors Gemini B and launch vehicle interface signals. Signals simulated by the substitute are Gemini B Electrical Power and Guidance and Control Systems signals. These signals are applied to and commanded by the launch vehicle Combined Systems Test Simulator Set (CSTSS).

There are two modes of operation of the substitute. In the LOCAL mode of operation signals generated by the substitute are initiated manually by panel mounted switches and potentiometers. In the REMOTE mode of operation the substitute generated signals are initiated by bi-level commands from the CSTSS.

Monitoring of launch vehicle bi-level (ON-OFF) generated signals is provided by indicator lights, digital voltmeter and launch vehicle AGE event recorders. Launch vehicle generated analog signals are monitored by meters, digital voltmeter, and launch vehicle AGE analog recorders.

The Gemini B/MOL/L/V Electrical Interface Substitute is an upright console consisting of a single bay. The console is approximately 6 feet high, 2 feet wide and 1.5 feet deep and caster mounted for ease

1.1 DESCRIPTION (Continued)

of movement. A door at the rear of the cabinet provides access to the cabinet wiring and panels. A cable entry panel on the rear of the cabinet provides connections for input power and interface cabling.

The following paragraphs describe the individual subassemblies comprising the substitute. Refer to Figure 6-1, Section VI for the cabinet cabling diagram.

1.1.1 DIGITAL VOLTMETER (Y593440A/3443A)

The Hewlett-Packard Model 3440A Digital Voltmeter (Figure 1-2), equipped with a 3443A plug-in unit, provides a digital display of selected interface signals. These signals are selected by the DVM SELECT switches on the Analog Monitor Panel.

The unit provides a four digit presentation of 0-99.99 mv to 0-999.9 volts, and indicates polarity automatically. The unit also has a self-check capability. For additional information refer to the applicable Hewlett-Packard operating and service manual.

1.1.2 ANALOG MONITOR PANEL (58D042022-1)

The Analog Monitor Panel (Figure 1-3) monitors various launch vehicle analog pressure signals and velocity and attitude comparison signals. Meters monitoring these signals are located on the panel face. The panel is also capable of generating attitude error signals to the launch vehicle. The attitude error signals, with the substitute in the LOCAL mode of operation, are generated by first adjusting the

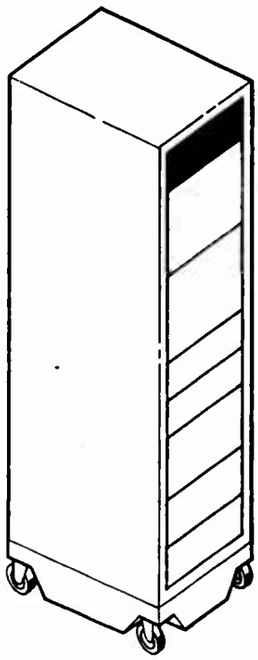

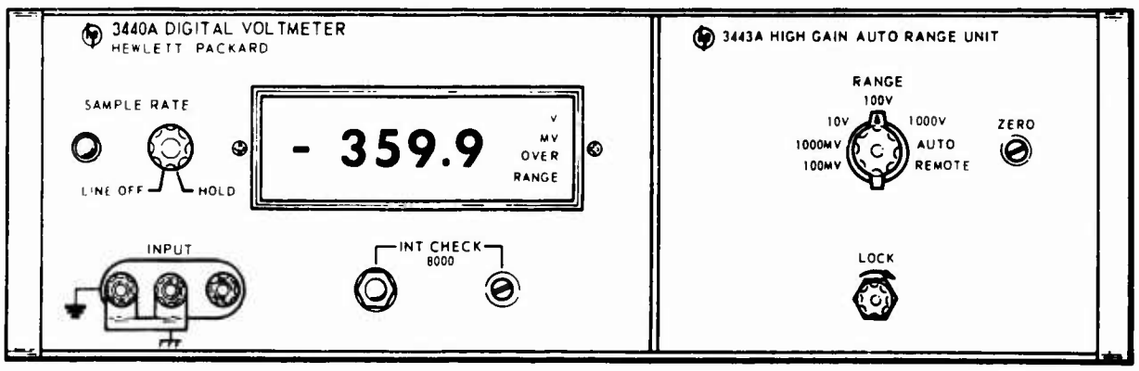

Figure 1-2 Digital Voltmeter (Y593440A/3443A)

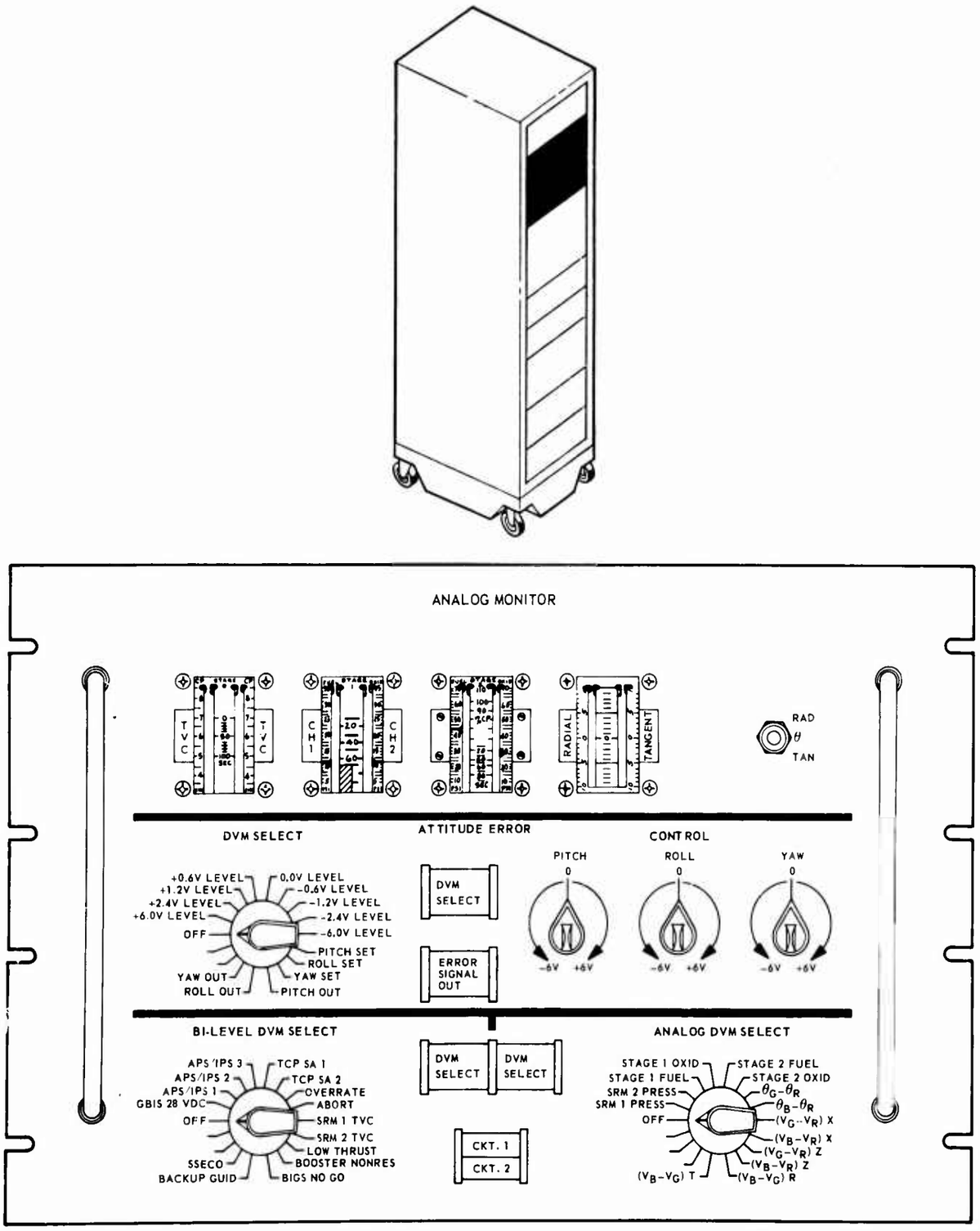

Figure 1-3 Analog Monitor Panel (58D042022-1)

1.1.2 ANALOG MONITOR PANEL (58D042022-1) (Continued)

PITCH, ROLL and YAW error signal control knobs for the desired voltage. This attitude error signal is monitored on the Digital Voltmeter when the DVM SELECT switch is in the PITCH SET, ROLL SET, or YAW SET positions. During the attitude error signal set-up procedure the actual attitude error signals at the substitute-launch vehicle interface are at the zero volt level and will remain so until the ERROR SIGNAL OUT switch is depressed. When the ERROR SIGNAL OUT switch is depressed for the first time after the LOCAL POWER switch (located on Control and Monitor Panel) is depressed, the attitude error signal as previously set up will be transferred to the substitute-launch vehicle interface. Depressing the ERROR SIGNAL OUT switch the second time returns the attitude error signal at the interface to the zero volt level. In the REMOTE mode of operation the substitute supplies attitude error signals when it receives a steering error test command from the CSTSS. The attitude error signals are preset voltage levels applied to the pitch, yaw, and roll channels. The output voltage will not change until it receives the next CSTSS steering error test command. The substitute provides the capability to preset the individual attitude error signal steps to any one of the following nine voltage levels: +6.0 vdc, +2.4 vdc, +1.2 vdc, +0.6 vdc, 0 vdc, -0.6 vdc, -1.2 vdc, -2.4 vdc, or -6.0 vdc.

Ten distinct attitude error signal steps are provided by the substitute. Each step is preset to one of the above mentioned voltage levels by

1.1.2 ANALOG MONITOR PANEL (58D042022-1) (Continued)

programming a matrix board for each of the pitch, yaw, and roll channels. The matrix boards are located at the rear of the panel assembly. Refer to Table 4-1, Section IV for panel control and indicator functions and to Figure 6-2, Section VI for the panel schematic.

1.1.3 CONTROL AND MONITOR PANEL (58D042021-1)

The Control and Monitor Panel (Figure 1-4) contains controls and indicators that provide and monitor simulated spacecraft functions. Three controls select launch vehicle voltage busses and these voltages are applied to panel busses. Other controls with relay switching capabilities route the voltages back to the launch vehicle as command signals. Launch vehicle signals coming into the panel are monitored by lights, simulating spacecraft light indicators. Most signals are routed to the Analog Monitor Panel for monitoring on the Digital Voltmeter.

The Control and Monitor Panel also controls the application of input power to the console blower and panel assemblies. A more detailed explanation of the panel controls and indicators is given in Table 4-2, Section IV. Refer to Figure 6-3, Section VI for a panel schematic.

1.1.4 PCM SIMULATOR (2790-01-6-04-M4)

The EMR PCM Simulator (Figure 1-5) is used to simulate the Gemini B Digital Computer. Digital data is programmed into the unit by controls on the simulator front panel. The unit supplies this digital data to the Guidance Interface Adapter which is part of the Digital Data Output Panel. Digital data can be transferred from the simulator

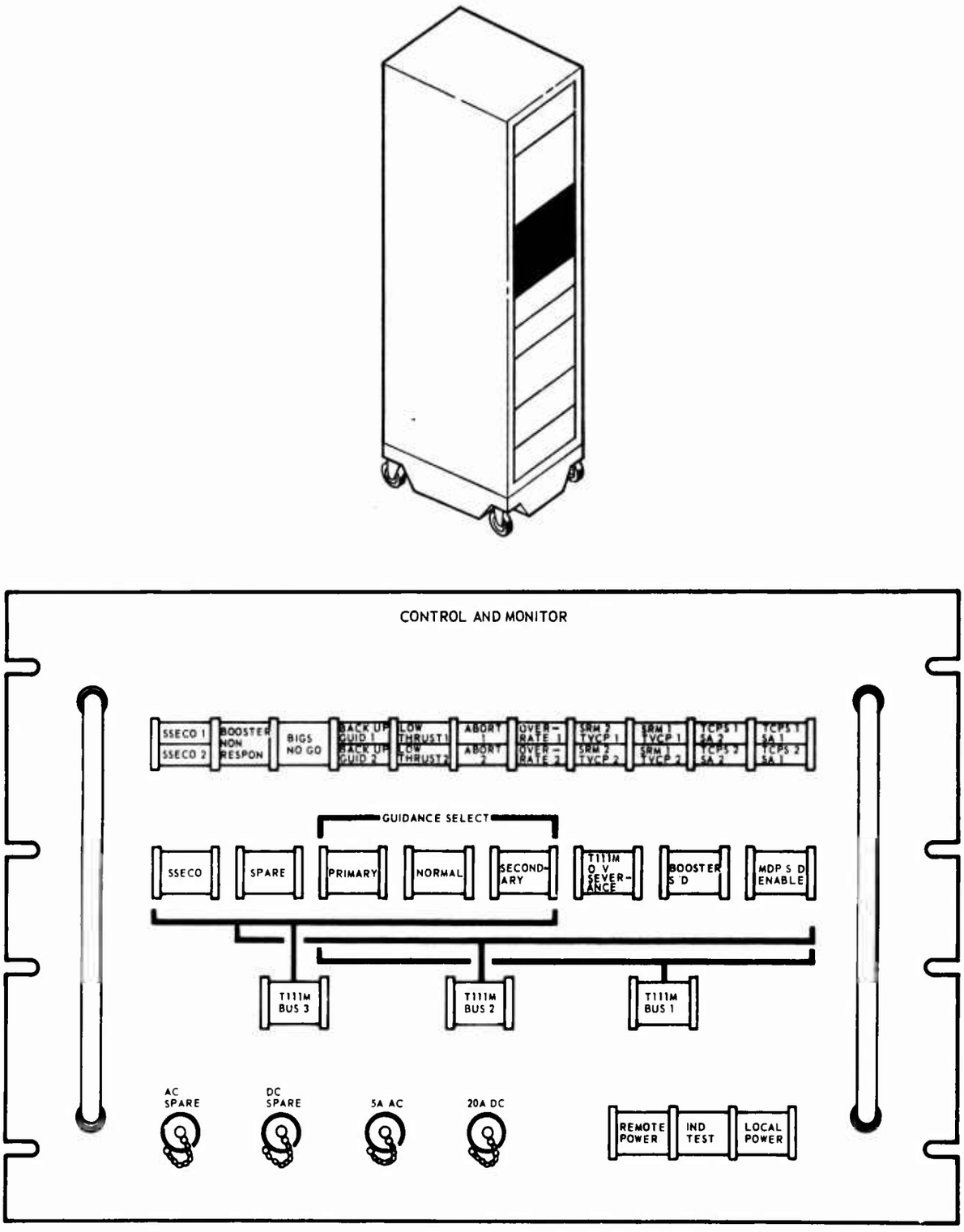

Figure 1-4 Control and Monitor Panel (58D042021-1)

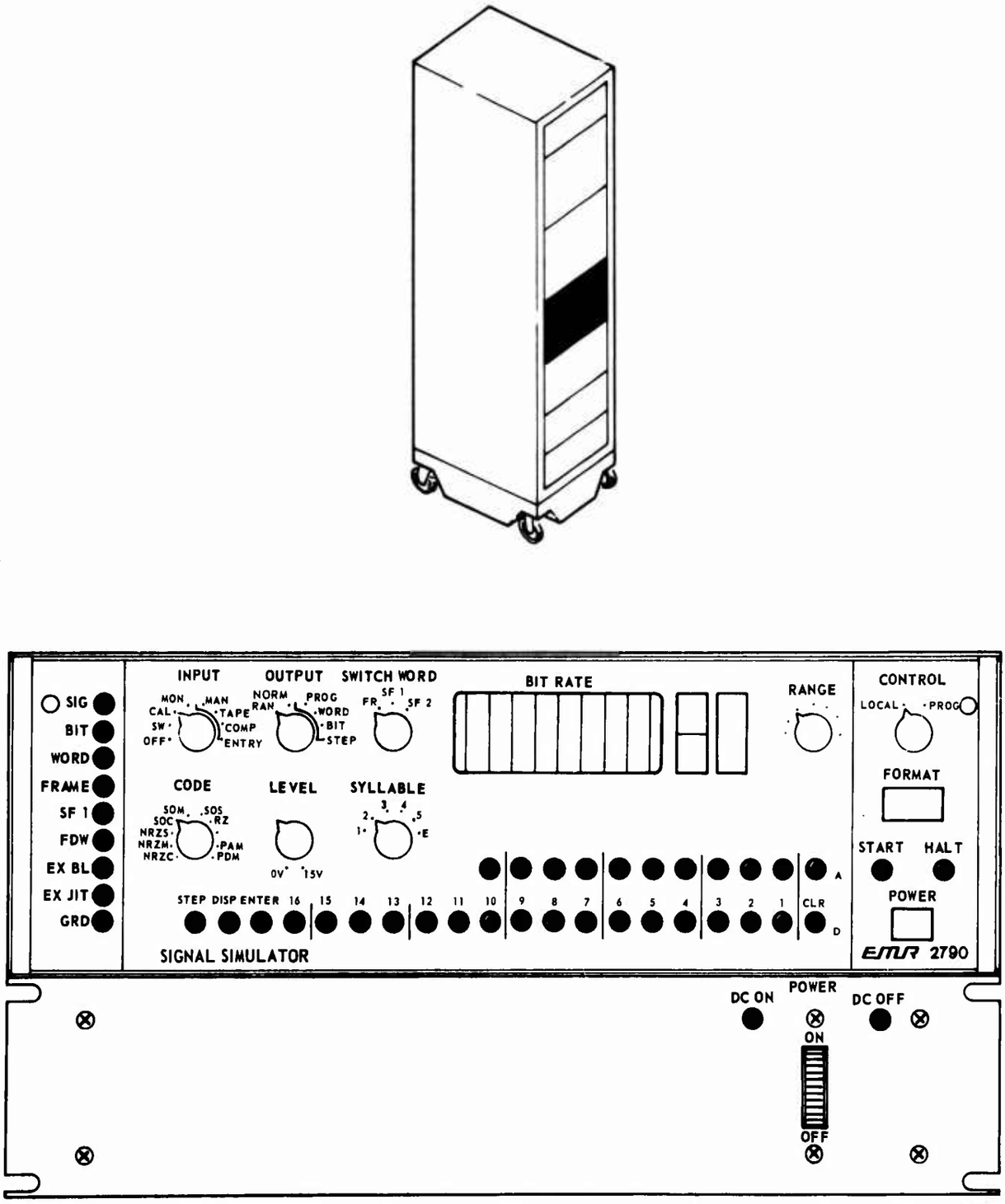

Figure 1-5 PCM Simulator (2790-01-04-M4)

1.1.4 PCM SIMULATOR (2790-01-6-04-M4) (Continued)

locally by front panel controls or remotely by commands from other launch vehicle AGE. For additional information refer to the applicable EMR instruction manual along with the 2790M-4 configuration supplement, EMR 16021 drawing, and EMR 16022 wire list. To program the simulator to provide the simulated computer computation cycle for local mode of operation see the wheel diagram, Figure 6-5. For remote operation the simulator is programmed for one word of the computer computation cycle. See Figure 6-6 for the program wheel diagram.

1.1.5 DIGITAL DATA OUTPUT PANEL (58D042027-1)

The Digital Data Output Panel is a plain front panel containing the Guidance Interface Adapter. The Guidance Interface Adapter receives signals from the PCM Simulator which substitutes for the Gemini B Digital Computer. These signals are ground isolated and conditioned by the Guidance Interface Adapter before being sent to the launch vehicle. The above signals are dc analog steering error signals, digital (velocity, attitude, and time) data, shift pulses and data ready discretes.

1.1.6 BLOWER ASSEMBLY (R2EB350A)

The Blower Assembly (Figure 1-6) provides cooling air for the equipment contained in the cabinet. The incoming air is passed through a permanent type dust filter which is located on the front panel. Blower power is controlled by the LOCAL POWER switch on the Control and Monitor Panel. For additional information refer to the McLean Engineering Laboratories Instruction Manual for the R2EB350A Blower.

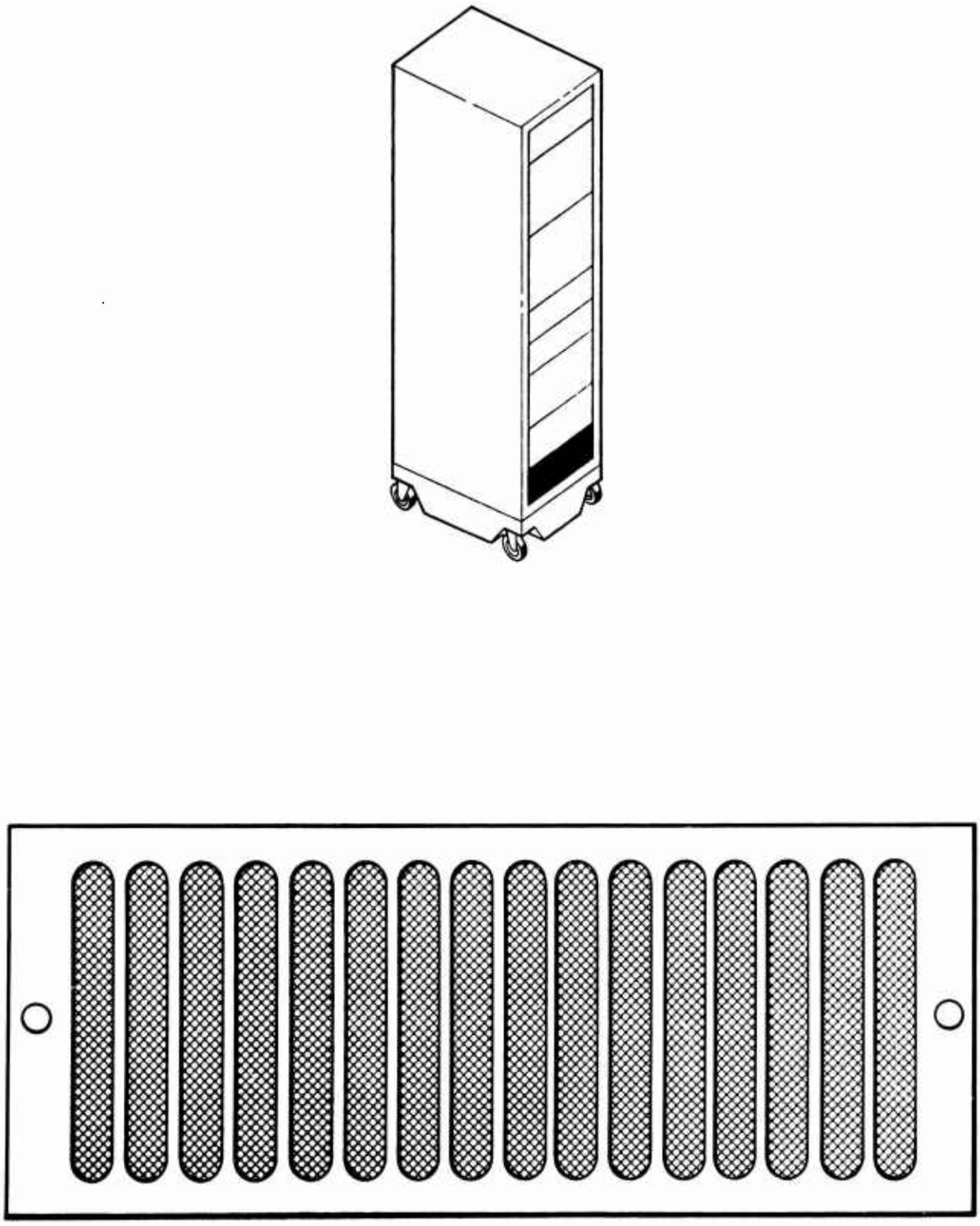

Figure 1-6 Blower Assembly (R2EB350A)

1.2 RELATED EQUIPMENT

The Gemini B/MOL/L/V Electrical Interface Substitute requires the Combined Systems Test Simulator Set (CSTSS), CEI-F09D01 for normal operation.

1.3 FACILITY REQUIREMENTS

The power requirements for the Gemini B/MOL/L/V Electrical Interface Substitute are as follows:

(a) 115 vac, 60 cps, single-phase regulated power.

(b) 115 vac, 60 cps, single-phase unregulated power.

(c) 28 vdc

SECTION II

TEST EQUIPMENT AND SPECIAL TOOLS

2.1 TEST EQUIPMENT

Standard laboratory test equipment is required for calibration and maintenance of the Gemini B/MOL/L/V Electrical Interface Substitute.

2.2 SPECIAL TOOLS

No special tools are required for maintenance or testing of the Gemini B/MOL/L/V Electrical Interface Substitute.

SECTION III

PREPARATION FOR USE, SHIPMENT AND STORAGE

3.1 PREPARATION FOR USE

The following procedure shall be performed before initial use, after prolonged storage, and after major repair or modification.

(a) Perform a visual inspection of the cabinet and panels.

(b) Calibrate the cabinet mounted equipment by performing the procedures of Paragraph 5.2.2.

(c) Perform an acceptance test of the cabinet equipment in accordance with ATP 58D900193.

3.2 PREPARATION FOR SHIPMENT

Refer to MIL-E-17555 for preparation instructions.

3.3 PREPARATION FOR STORAGE

Refer to MIL-E-17555 for preparation instructions.

SECTION IV

OPERATION

4.1 FUNCTIONS OF CONTROLS AND INDICATORS

4.1.1 COMMERCIAL EQUIPMENT

Refer to the applicable Hewlett-Packard and Electro-Mechanical Research instruction manuals for the control and indicator functions of the Digital Voltmeter and PCM Simulator.

4.1.2 ANALOG MONITOR PANEL

The function of the Analog Monitor Panel (Figure 1-3) controls and indicators is explained in Table 4-1.

COMPONENT	FUNCTION
STAGE 0 CP meter	Monitors analog signals from the Solid Rocket Motor Head (SRM) Head End Pressure Sensors in launch vehicle.
STAGE 1 FUEL/OXID meter	Monitors analog signals from the stage 1 fuel tank and oxidizer tank pressure sensors.
STAGE 2 FUEL/OXID meter	Monitors analog signals from the stage 2 fuel tank and oxidizer tank pressure sensors. Also monitors analog signals from the stage 2 thrust chamber pressure sensors through signal switching in the launch vehicle.
RADIAL, TANGENT lights and Guidance Comparator Indicator (G.C.I.)	Monitors tangential and radial GIGS (Gemini Inertial Guidance System) and BIGS (Booster Inertial Guidance System) comparison velocity on the two outside scales. After SSECO these scales display tangential and radial velocity to be gained. One inside scale displays the comparison of BIGS and ARS (Attitude Reference System) velocity along the roll and yaw axis and attitude in pitch

Table 4-1 Analog Monitor Panel Component Functions

4.1.2 ANALOG MONITOR PANEL (Continued)

COMPONENT		FUNCTION
RADIAL, TANGENT lights and Guidance Comparator Indicator (G.C.I.)		(Continued) plane. The other inside scale displays the comparison of GIGS and ARS velocity along the roll and yaw axis and attitude in pitch plane. Lights, when illuminated, indicate signals are tangential or radial. No light illumination indicates signals are pitch attitude signals.
RAD, TAN switch	S5	Selects radial, tangential and pitch attitude signals for application to Guidance Comparator Indicator.
DVM SELECT switch	S7	Selects steering error commands and preset pitch, yaw and roll error signals for readout on the DVM.
DVM SELECT switch/indicator	S4, DS4	Applies signals selected by switch S7 to the DVM. Illuminates when actuated.
ERROR SIGNAL OUT switch/indicator	S1, DS1	Applies steering error signals to launch vehicle and Guidance Interface Adapter. Illuminates when actuated.
PITCH, ROLL, YAW controls	R16, R18, R19	Manually controls plus and minus pitch, roll and yaw steering error signals.
BI-LEVEL DVM SELECT switch	S6	Selects bi-level signals from the launch vehicle for readout on DVM.
DVM SELECT switch/indicator	S3, DS3	Applies signals selected by switch S6 to the DVM. Illuminates when actuated.
DVM SELECT switch/indicator	S8, DS5	Applies signals selected by switch S9 to the DVM. Illuminates when actuated.
CKT. 1, CKT. 2 switch/indicator	S2, DS2	Selects signals from deck A or deck B of switch S6 for application to DVM by switch/indicator S3, DS3. The selected signals are redundant and this switch distinguishes between them.
ANALOG DVM SELECT switch	S9	Selects analog signals from the launch vehicle for readout on DVM.

Table 4-1 Analog Monitor Panel Component Functions (Continued)

4.1.3 CONTROL AND MONITOR PANEL

The function of the Control and Monitor panel (Figure 1-4) controls and indicators are explained in Table 4-2.

COMPONENT		FUNCTION
SSECO 1, SSECO 2 indicator	DS24	When illuminated indicates receipt of SSECO signals from launch vehicle.
BOOSTER NON RESPON indicator	DS23	When illuminated indicates receipt of Booster NON RESPON signal from launch vehicle.
BIGS NO GO indicator	DS22	When illuminated indicates receipt of Booster Inertial Guidance System NO-GO signal from launch vehicle.
BACK UP GUID 1 BACK UP GUID 2 indicator	DS21	When illuminated indicates receipt of back up guidance signals from launch vehicle.
LOW THRUST 1 LOW THRUST 2 indicator	DS20	When illuminated indicates receipt of low thrust signals from launch vehicle.
ABORT 1 ABORT 2 indicator	DS19	When illuminated indicates receipt of abort signals from launch vehicle.
OVERATE 1 OVERATE 2 indicator	DS18	When illuminated indicates receipt of overate signals from launch vehicle.
SRM2, TVCP1 SRM1, TVCP2 indicator	DS17	When illuminated indicates receipt of signals from thrust vector control pressure switches in launch vehicle.
SRM1, TVCP1 SRM2, TVCP2 indicator	DS16	Same as DS17. Monitors certain thrust vector control pressure switches in launch vehicle.
TCPS1, SA2 TCPS2, SA2 indicator	DS15	When illuminated indicates receipt of signals from thrust chamber pressure switches in launch vehicle.
TCPS1, SA1 TCPS2, SA1 indicator	DS14	Same as DS15. Monitors certain thrust chamber pressure switches in launch vehicle.

Table 4-2 Control and Monitor Panel Component Functions

4.1.3 CONTROL AND MONITOR PANEL (Continued)

COMPONENT		FUNCTION
SSECO switch/ indicator	S12, DS13	When actuated applies launch vehicle power as engine shutdown signal to launch vehicle. Illuminates when actuated.
DESTRUCT INHIBIT switch/ indicator	S14, DS25	When actuated applies launch vehicle power as destruct inhibit signal to launch vehicle. Illuminates when actuated.
GUIDANCE SELECT		
PRIMARY switch/ indicator	S11/ DS12	When actuated applies launch vehicle power as primary guidance signal to launch vehicle.
NORMAL switch/ indicator	S10/ DS11	When actuated opens relays selected by the primary and secondary switch/indicators. Cuts off guidance signals to launch vehicle. Illuminates when guidance signal relays are open.
SECONDARY switch/ indicator	S9, DS10	When actuated applies launch vehicle power as secondary guidance signal to launch vehicle. Illuminates when actuated.
TIIIM/OV SEVERANCE switch/indicator	S8, DS9	When actuated applies launch vehicle power as TIIIM/Orbiting Vehicle severance command signals to launch vehicle. Illuminates when actuated.
BOOSTER S/D switch/indicator	S7, DS8	When actuated removes launch vehicle power from booster shutdown command lines and switches the power to the Malfunction Detection System (MDS) shutdown enable lines. Illuminates when actuated.
MDS S/D ENABLE switch/indicator	S6, DS7	When actuated, applies launch vehicle power as MDS shutdown enable signal to launch vehicle. Illuminates when actuated.
TIIIM BUS 3 switch/indicator	S5, DS6	When actuated applies launch vehicle Bus 3 power to TB15 in panel for distribution. Illuminates when actuated.

Table 4-2 Control and Monitor Panel Component Functions (Continued)

4.1.3 CONTROL AND MONITOR PANEL (Continued)

COMPONENT		FUNCTION
TIIIM BUS 2 switch/indicator	S4, DS5	When actuated applies launch vehicle Bus 2 power to TB14 in panel for distribution. Illuminates when actuated.
TIIIM BUS 1 switch/indicator	S3, DS4	When actuated applies launch vehicle Bus 1 power to TB13 in panel for distribution. Illuminates when actuated.
REMOTE POWER indicator	DS3	Indicates remote command power is applied to the simulator through the GBIS IN PLACE switch S1, located on cable entry panel at back of the Substitutes cabinet.
IND TEST switch/indicator	S2, DS2	When actuated, operates relays that apply power to illuminate all panel indicators for a lamp check.
LOCAL POWER switch/indicator	S1, DS1	When actuated allows input power to be applied to the substitute.
GBQ, MANNED switch	S13	Located at back of panel. In GBQ position, relay coils are connected to (abort) signal lines from the launch vehicle for signal loading.
AC SPARE fuse and holder		Spare fuse to replace F2 as required.
DC SPARE fuse and holder		Spare fuse to replace F1 as required.
5A AC fuse and holder	F2	Provides protection for 115 vac regulated power input circuit.
20A DC fuse and holder	F1	Provides protection for 28 vdc power input circuit.

Table 4-2 Control and Monitor Panel Component Functions (Continued)

4.1.4 CABLE ENTRY PANEL

The functions of the panel controls and indicators are explained in Table 4-3.

4.1.4 CABLE ENTRY PANEL (Continued)

COMPONENT		FUNCTION
GBIS IN PLACE switch	S1	Supplies signal path for launch vehicle indicating the substitute is properly connected for testing. Also supplies a signal path for launch vehicle remote command power (28 vdc). This signal activates relays in the substitute allowing for remote control of the substitute functions.
5A fuse and holder	F1	Provides protection for the substitute blower circuit.

Table 4-3 Cable Entry Panel Control Functions

4.2 PRE-OPERATIONAL VALIDATION

The following pre-operational validation is to be performed prior to each usage of the Gemini B/MOL/L/V Electrical Interface Substitute 58E040504.

NOTE

Whenever the specified results cannot be obtained, or if a malfunction is indicated, the substitute is not to be used until corrective measures have been completed.

4.2.1 EQUIPMENT REQUIRED

The Combined System Test Simulator Set (CSTSS), CE1-F09D01 must be operating to supply input power to the substitute.

4.2.2 SET-UP

(a) Inspect the Gemini B/MOL/L/V Electrical Interface Substitute cabinet and cabinet components for obvious physical damage.

4.2.2 SET-UP (Continued)

(b) Verify that inter-cabinet wiring cables and/or power input cables are properly connected to the substitute cabinet (See Figure 6-1).

(c) Verify that current calibration stickers are attached to the Digital Voltmeter and PCM Simulator panels.

(d) Activate the Combined System Test Simulator Set (CSTSS) to supply input power to the substitute.

4.2.3 PROCEDURE

(a) Depress the LOCAL POWER switch located on the Control and Monitor panel, to ON. Verify that the switch illuminates.

(b) Verify that the blower operates when the LOCAL POWER switch is depressed.

(c) Depress the INDICATOR TEST switch, located on the Control and Monitor panel, and verify that all Control and Monitor and Analog Monitor Panel indicator lamps are illuminated.

(d) Position the POWER switch on the Digital Voltmeter to ON. Verify that the POWER indicator illuminates and the unit is operative.

(e) Depress the POWER switch on the PCM Simulator to ON. Verify that the switch illuminates and the unit is operative.

(f) Depress the LOCAL POWER switch, located on the Control and Monitor panel, to OFF (extinguished) condition.

4.3 OPERATION

The following procedures provide instructions for starting and stopping the equipment. For operating procedures for the Gemini B/MOL/L/V Electrical Interface Substitute refer to the applicable test procedures.

4.3.1 EQUIPMENT REQUIRED

The Combined System Test Simulator Set (CSTSS), CE1-F09D01 must be operating to supply input power to the substitute. Optional commercial equipment may be used for monitoring panel test points, etc.

4.3.2 SET-UP

(a) Connect the launch vehicle interface wiring to the cabinet cable entry panel in accordance with the applicable test procedures.

(b) Activate the Combined System Test Simulator Set (CSTSS) and other equipment as required by the applicable test procedures.

4.3.3 POWER-UP

(a) Depress the LOCAL POWER switch, located on the Control and Monitor Panel, to ON (illuminated) condition.

NOTE

The remaining controls on the cabinet panels and commercial equipment will be positioned as required by the applicable test procedures.

4.3.4 SHUTDOWN

(a) Depress the LOCAL POWER switch on the Control and Monitor Panel to OFF (extinguished) condition.

(b) Return all the remaining panel switches and cabinet mounted commercial equipment POWER switches to their OFF positions.

4.3.5 EMERGENCY SHUTDOWN

Depress the LOCAL POWER switch on the Control and Monitor Panel to OFF (extinguished) condition.

SECTION V

PREVENTIVE MAINTENANCE AND CALIBRATION

5.1 PREVENTIVE MAINTENANCE

The preventive maintenance requirements for the Gemini B/MOL/L/V Electrical Interface Substitute are specified in the AGE Preventive Maintenance Requirements Summary (Product Support Report P.S. 339). Table 5-1 lists the items identified in the maintenance summary and the type of maintenance required. A reference is provided for items requiring specific maintenance procedures.

ITEM	TYPE MAINTENANCE	REFERENCE
Cabinet	Visual Inspection	
Blower air filter	Clean	Paragraph 5.1.1
Digital Voltmeter	Calibration	Paragraph 5.2.2.2
Analog Monitor Panel	Calibration	Paragraph 5.2.2.3

Table 5-1 Preventive Maintenance Requirements

5.1.1 CLEANING

(a) Wash blower air filter with water, dry and recoat with Filter Coat 411, Research Products Corporation.

NOTE

Access to the blower filter is obtained by removing the grille from the front of the blower assembly.

5.2 CALIBRATION

5.2.1 FREQUENCY OF CALIBRATION

The Gemini B/MOL/L/V Electrical Interface Substitute shall be calibrated at intervals specified in the AGE Preventive Maintenance Requirements Summary (Product Support Report P.S. 339), after replacement of components, or in the event of a malfunction.

5.2.2 CALIBRATION PROCEDURES

The following calibration procedures are provided to ensure that the Gemini B/MOL/L/V Electrical Interface Substitute meets specified requirements.

5.2.2.1 Equipment Required

The equipment required for calibrating the cabinet components is standard laboratory test equipment or equipment defined in the applicable manufacturers instruction manuals.

5.2.2.2 Digital Voltmeter Calibration

Calibrate the Digital Voltmeter, Hewlett-Packard Y593440A/3443A in accordance with the applicable manufacturers instruction manual.

5.2.2.3 Analog Monitor Panel Calibration

5.2.2.3.1 Calibrate the Analog Monitor Panel Stage "0" Launch Vehicle Indicator, 52-81708-5 using standard laboratory procedure to the specifications shown in Table 5-2.

5.2.2.3.1 (Continued)

SIGNAL VDC	CP	CENTER SCALE (SECONDS)
0.75	850	0 AT 700
1.50	700	50 AT 600
2.50	500	100 AT 500
3.25	350	

Table 5-2 Signal Voltage to Indicator Scale Specifications (Stage 1)

5.2.2.3.2 Calibrate the Analog Monitor Panel Stage "I" Launch Vehicle Indicator, 52-81708-7 using standard laboratory procedure to the specifications in Table 5-3.

SIGNAL VOLTAGE TO INDICATOR SCALE		SCALE CORRELATION	
SIGNAL VDC	FUEL AND OXID. SCALE	TIME/SEC	PRESS/PSI
1.50	35	10	25.0
2.00	30	20	22.5
2.50	25	30	20.0
3.00	20	40	17.5
3.50	15	50	15.0
4.00	10	60	12.5
4.50	5	70	10.0
		80	8.0
		90	6.0

Table 5-3 Signal Voltage and Scale Correlation Specifications (Stage 2)

5.2.2.3.3 Calibrate the Analog Monitor Panel Stage "II" Launch Vehicle Indicator, 52-81708-9 using standard laboratory procedure to the specifications in Table 5-4.

5.2.2.3.3 (Continued)

SIGNAL VOLTAGE TO INDICATOR SCALE				SCALE CORRELATION	
SIGNAL VDC	FUEL AND OXID SCALE	SIG VDC	STAGE 2 C.P. SCALE	TIME/SEC	PRESS/PSI
0.33	70		FULL SCALE	10	32
1.00	60	0.43	110	20	29.5
1.67	50	0.85	100	30	27
2.33	40	1.26	90	40	24
3.00	30	1.68	80	50	22
3.66	20	2.10	70	60	20
4.33	10	2.52	60	70	17
				80	14
				90	11

Table 5-4 Signal Voltage and Scale Correlation Specifications

5.2.2.3.4 Calibrate the Analog Monitor Panel Guidance Comparator Indicator, 52-81708-11 using standard laboratory procedure to the specifications in Table 5-5.

SIGNAL VDC	SCALE
0	+10
0.909	+5
1.818	0
2.727	-5
3.636	-10

Table 5-5 Signal Voltage to Indicator Scale Specifications

5.2.2.4 Altitude Error Step Level Calibration

(a) Position DVM SELECT switch (S7) to +6.0 V LEVEL. Depress DVM SELECT (S4) and adjust potentiometer R17 (located at rear of panel) for +6.000 ± .005 VDC on digital voltmeter.

NOTE

DVM SELECT (S4) must be depressed for digital voltmeter indication when making potentiometer adjustments. Potentiometers are located at rear of panel.

(b) Position DVM SELECT switch (S7) to +2.4 V LEVEL. Adjust potentiometer R22 for +2.400 ± .005 vdc on digital voltmeter.

(c) Position DVM SELECT switch (S7) to +1.2 V LEVEL. Adjust potentiometer R24 for +1.200 ± .005 vdc on digital voltmeter.

(d) Position DVM SELECT switch (S7) to +0.6 V LEVEL. Adjust potentiometer R25 for + 0.600 ± .005 vdc on digital voltmeter.

(e) Position DVM SELECT switch (S7) to -6.0 V LEVEL. Adjust potentiometer R30 for -6.000 ± .005 vdc on digital voltmeter.

(f) Position DVM SELECT switch (S7) to -2.4 V LEVEL. Adjust potentiometer R28 for -2.400 ± .005 vdc on digital voltmeter.

(g) Position DVM SELECT switch (S7) to -1.2 V LEVEL. Adjust potentiometer R27 for -1.200 ± .005 vdc on digital voltmeter.

(h) Position DVM SELECT switch (S7) to -0.6 V LEVEL. Adjust potentiometer R26 for -0.600 ± .005 vdc on digital voltmeter.

(i) Position DVM SELECT switch (S7) to 0.0 V LEVEL. Verify digital voltmeter indicates 0.000 ± .005 vdc.

5.2.2.5 Amplifier Potentiometer Calibration

5.2.2.5.1 Pitch Amplifier Adjust

(a) Position PITCH CONTROL on panel to +6 V (full cw).

(b) Position DVM SELECT switch (S7) to PITCH SET.

(c) Depress DVM SELECT (S4) and adjust potentiometer on amplifier 3 (located at rear of panel) for +6.000 ± .005 vdc reading on digital voltmeter.

(d) Position PITCH CONTROL on panel to -6V (full ccw).

(e) Depress DVM SELECT (S4) and verify -6.000 ± .010 vdc reading on digital voltmeter.

5.2.2.5.2 Roll Amplifier Adjust

(a) Position ROLL CONTROL on panel to +6 V (full cw).

(b) Position DVM SELECT switch (S7) to ROLL SET.

(c) Depress DVM SELECT (S4) and adjust potentiometer on amplifier 2 (located at rear of panel) for +6.000 ± .005 vdc reading on digital voltmeter.

(d) Position ROLL CONTROL on panel to -6 V (full ccw).

(e) Depress DVM SELECT (S4) and verify -6.000 ± .010 vdc reading on digital voltmeter.

5.2.2.5.3 YAW Amplifier Adjust

(a) Position YAW CONTROL on panel to +6 V (full cw).

(b) Position DVM SELECT switch (S7) to YAW SET.

(c) Depress DVM SELECT (S4) and adjust potentiometer on amplifier 1 (located at rear of panel) for +6.000 ± .005 vdc reading on digital voltmeter.

5.2.2.5.3 YAW Amplifier Adjust (Continued)

(d) Position YAW CONTROL on panel to -6 V (full ccw).

(e) Depress DVM SELECT (S4) and verify -6.000 ± .010 vdc reading on digital voltmeter.

SECTION VI

LIST OF SUBASSEMBLIES AND DIAGRAMS

6.1 LIST OF SUBASSEMBLIES

Table 6-1 is a list of subassemblies for the Gemini B/MOL/L/V Electrical Interface Substitute (58E040504).

PART NUMBER	NOMENCLATURE/MANUFACTURER
58D042022-1	Analog Monitor Panel
R2EB350A	Blower Assembly (McLean Engineering Lab.)
58D042023-3	Cable Assembly
58D042023-5	Cable Assembly
58D042023-7	Cable Assembly
58D042023-9	Cable Assembly
58D042023-11	Cable Assembly
58D042023-13	Cable Assembly
58D042023-15	Cable Assembly
58D042023-17	Cable Assembly
58D042023-19	Cable Assembly
58D042023-21	Cable Assembly
58D042023-23	Cable Assembly
58D042023-25	Cable Assembly
58D042021-1	Control and Monitor Panel
58D042027-1	Digital Data Output Panel
Y593440A/3443A	Digital Voltmeter (Hewlett-Packard)

Table 6-1 List of Subassemblies

6.1 LIST OF SUBASSEMBLIES (Continued)

PART NUMBER	NOMENCLATURE/MANUFACTURER
2790-01-6-04-M4	PCM Simulator (EMR)
58D042023-27	Wiring Assembly

Table 6-1 List of Subassemblies (Continued)

6.2 DIAGRAMS

Figure 6-1 is the substitute cabling diagram showing the cabinet cabling between panels and external connectors. Figures 6-2, 6-3 and 6-4 are schematic diagrams of the panels contained in the cabinet. Figures 6-5 and 6-6 are wheel diagrams giving information for programming the PCM Simulator.

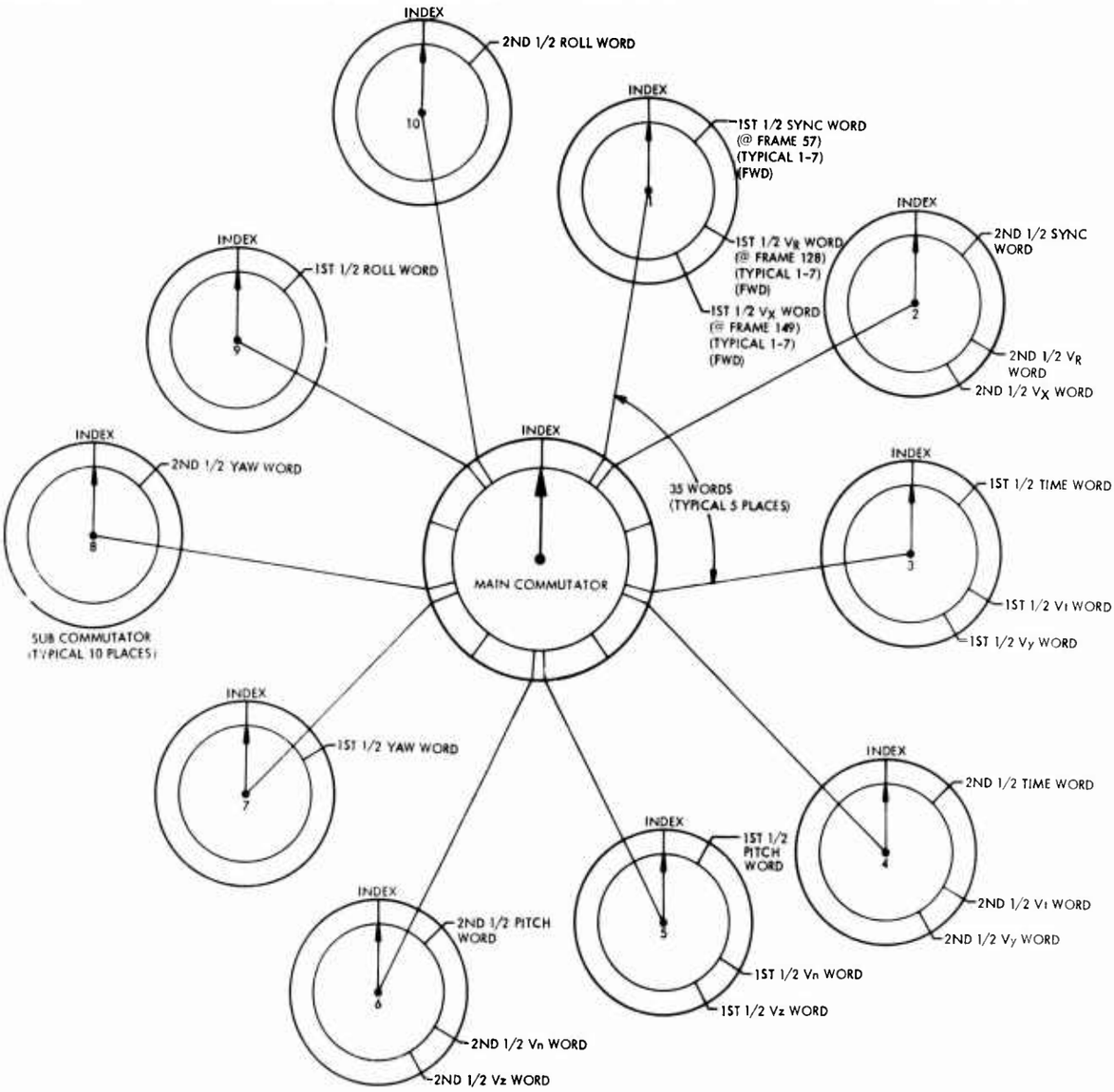

NOTE

1. FDW - FLAG DATA WORD

LEGEND	
MAIN COMMUTATOR	SUB COMMUTATOR
10 BITS/WORD 20 μSEC/WORD 175 WORDS/FRAME 3.5 MSEC/FRAME	256 FRAMES PER SUB-FRAME

Figure 6-1 Wheel Diagram (Local Operation)

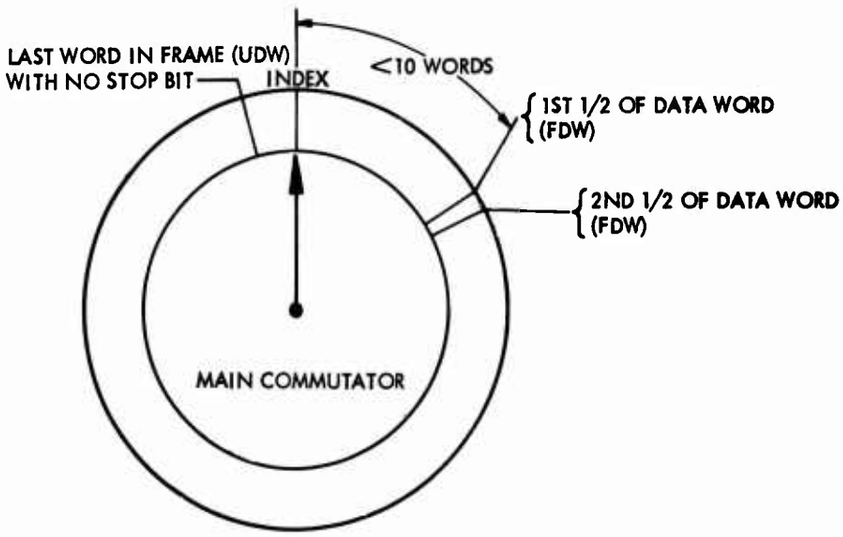

LEGEND
MAIN COMMUTATOR
10 BITS/WORD 20μSEC/WORD 500 WORDS/FRAME 10 MSEC/FRAME

NOTES

1. UDW - UNIQUE DATA WORD
2. FDW - FLAG DATA WORD
3. NO SUB COMMUTATORS

Figure 6-2 Wheel Diagram (Remote Operation)

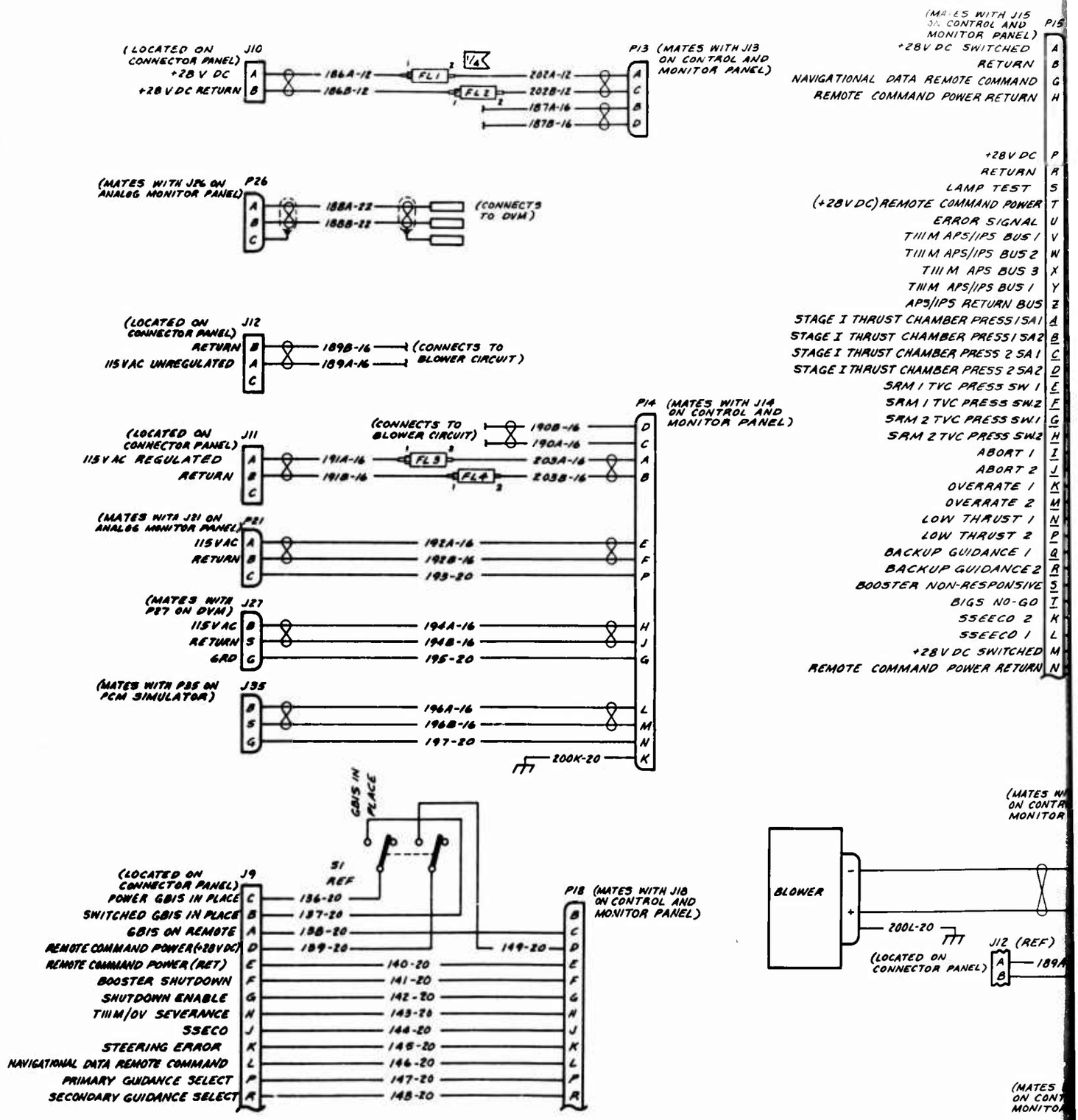
(LOCATED ON CONNECTOR PANEL) J10
+28 V DC
+28 V DC RETURN
186A-12
186B-12
FL1
FL2
1/4
202A-12
202B-12
187A-16
187B-16
P13 (MATES WITH J13 ON CONTROL AND MONITOR PANEL)
(MATES WITH J15 ON CONTROL AND MONITOR PANEL) P15
+28V DC SWITCHED
RETURN
NAVIGATIONAL DATA REMOTE COMMAND
REMOTE COMMAND POWER RETURN
(MATES WITH J26 ON ANALOG MONITOR PANEL) P26
188A-22
188B-22
(CONNECTS TO DVM)
+28V DC
RETURN
LAMP TEST
(+28V DC) REMOTE COMMAND POWER
ERROR SIGNAL
T111M APS/IPS BUS 1
T111M APS/IPS BUS 2
T111M APS BUS 3
T111M APS/IPS BUS 1
APS/IPS RETURN BUS
STAGE I THRUST CHAMBER PRESS 1 SA1
STAGE I THRUST CHAMBER PRESS 1 SA2
STAGE I THRUST CHAMBER PRESS 2 SA1
STAGE I THRUST CHAMBER PRESS 2 SA2
SRM 1 TVC PRESS SW 1
SRM 1 TVC PRESS SW.2
SRM 2 TVC PRESS SW.1
SRM 2 TVC PRESS SW.2
ABORT 1
ABORT 2
OVERRATE 1
OVERRATE 2
LOW THRUST 1
LOW THRUST 2
BACKUP GUIDANCE 1
BACKUP GUIDANCE 2
BOOSTER NON-RESPONSIVE
BIGS NO-GO
SSEECO 2
SSEECO 1
+28 V DC SWITCHED
REMOTE COMMAND POWER RETURN
(LOCATED ON CONNECTOR PANEL) J12
RETURN
115 VAC UNREGULATED
189B-16
189A-16
(CONNECTS TO BLOWER CIRCUIT)
(LOCATED ON CONNECTOR PANEL) J11
115 VAC REGULATED
RETURN
191A-16
191B-16
FL3
FL4
203A-16
203B-16
(CONNECTS TO BLOWER CIRCUIT)
190B-16
190A-16
P14 (MATES WITH J14 ON CONTROL AND MONITOR PANEL)
(MATES WITH J21 ON ANALOG MONITOR PANEL) P21
115 VAC
RETURN
192A-16
192B-16
193-20
(MATES WITH P27 ON DVM) J27
115 VAC
RETURN
GRD
194A-16
194B-16
195-20
(MATES WITH P35 ON PCM SIMULATOR) J35
196A-16
196B-16
197-20
200K-20
GBIS IN PLACE
S1
REF
(LOCATED ON CONNECTOR PANEL) J9
POWER GBIS IN PLACE
SWITCHED GBIS IN PLACE
GBIS ON REMOTE
REMOTE COMMAND POWER (+28 VDC)
REMOTE COMMAND POWER (RET)
BOOSTER SHUTDOWN
SHUTDOWN ENABLE
T111M/OV SEVERANCE
SSECO
STEERING ERROR
NAVIGATIONAL DATA REMOTE COMMAND
PRIMARY GUIDANCE SELECT
SECONDARY GUIDANCE SELECT
136-20
137-20
138-20
139-20
140-20
141-20
142-20
143-20
144-20
145-20
146-20
147-20
148-20
149-20
P18 (MATES WITH J18 ON CONTROL AND MONITOR PANEL)
BLOWER
200L-20
J12 (REF)
(LOCATED ON CONNECTOR PANEL)
189A

A

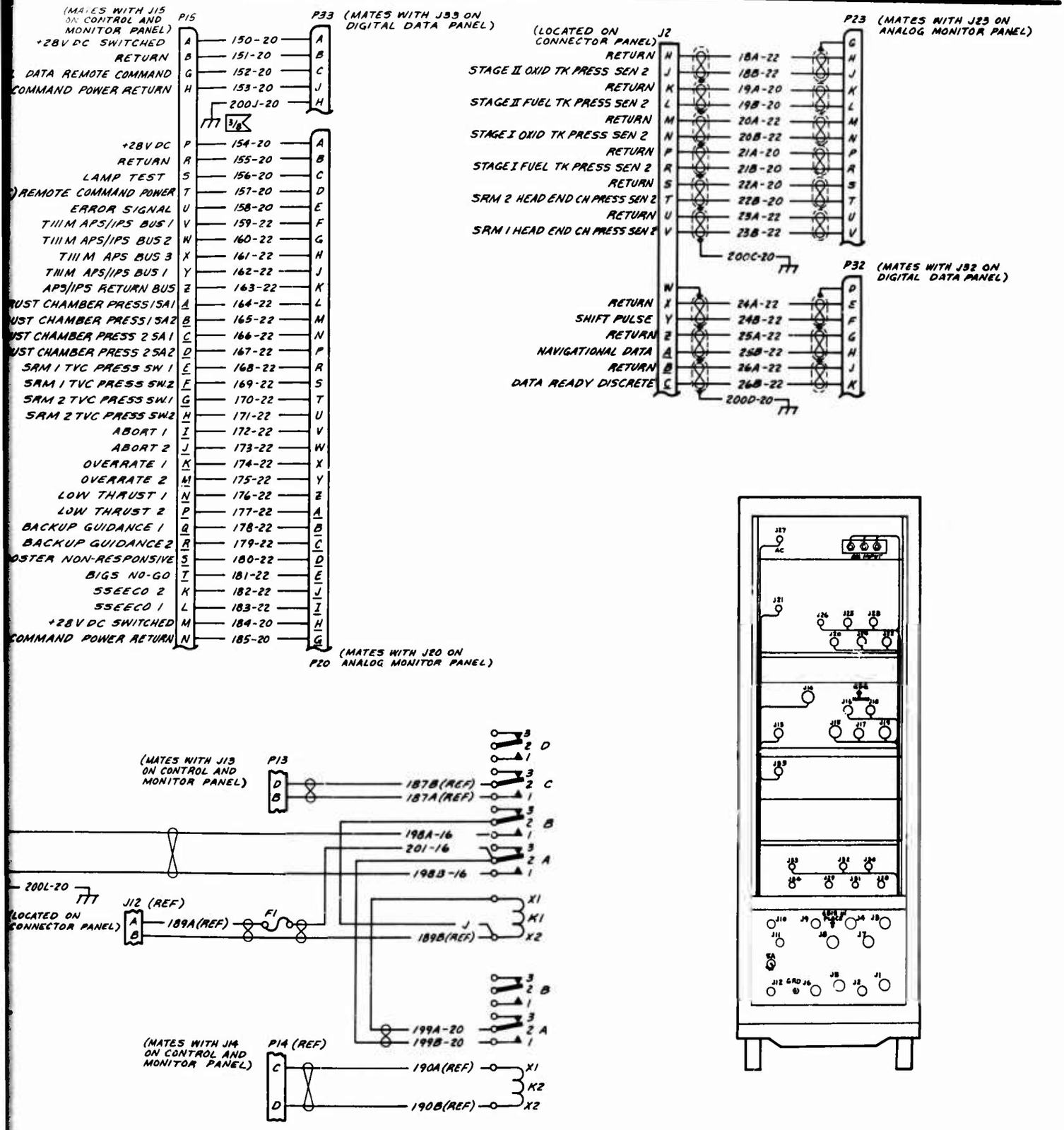

Figure 6-3 Cabinet Cabling Diagram (Sheet 1 of 2)

B

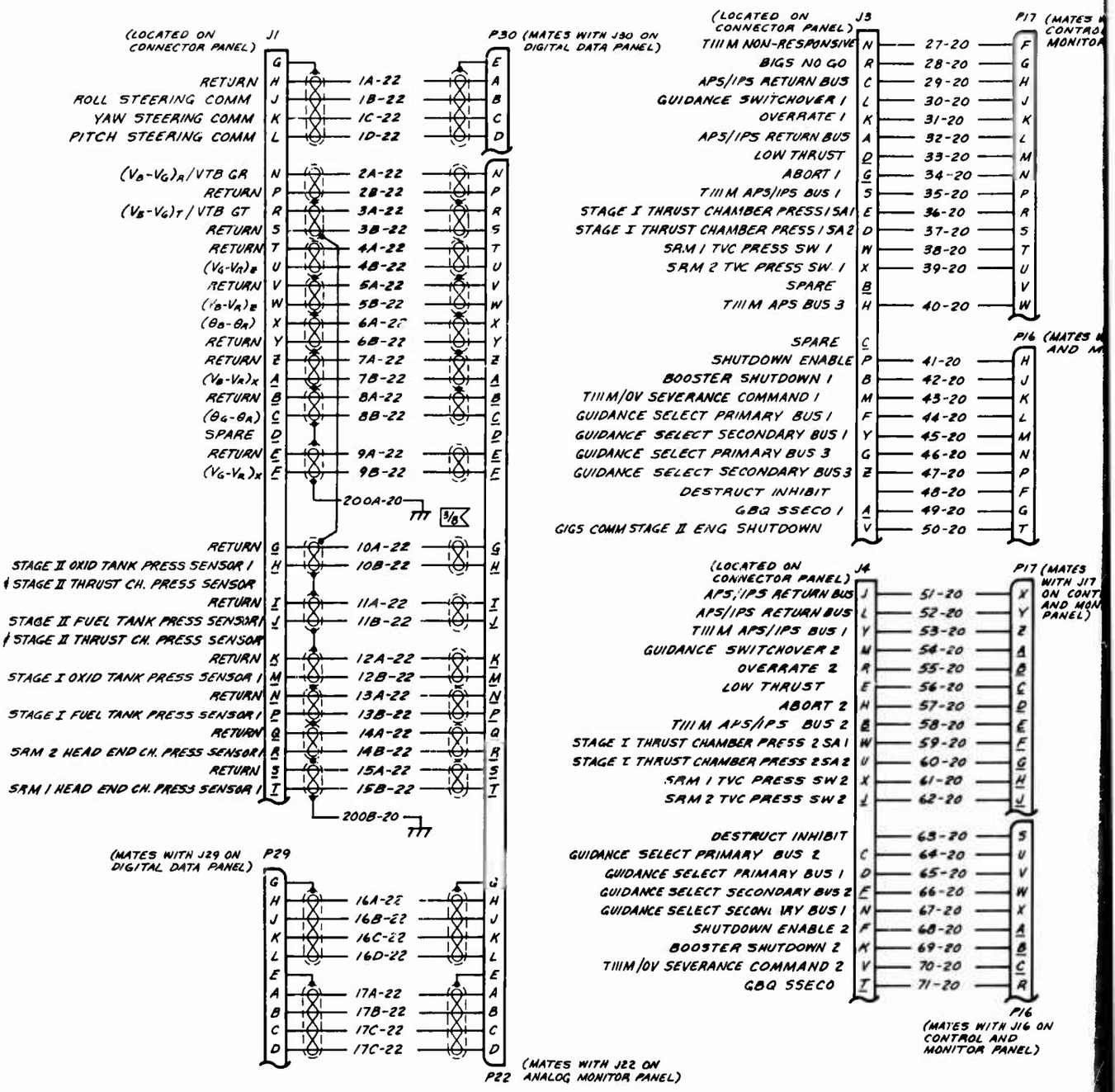

Figure 6-3 Cabinet Cabling Diagram (Sheet 2 of 2)

A

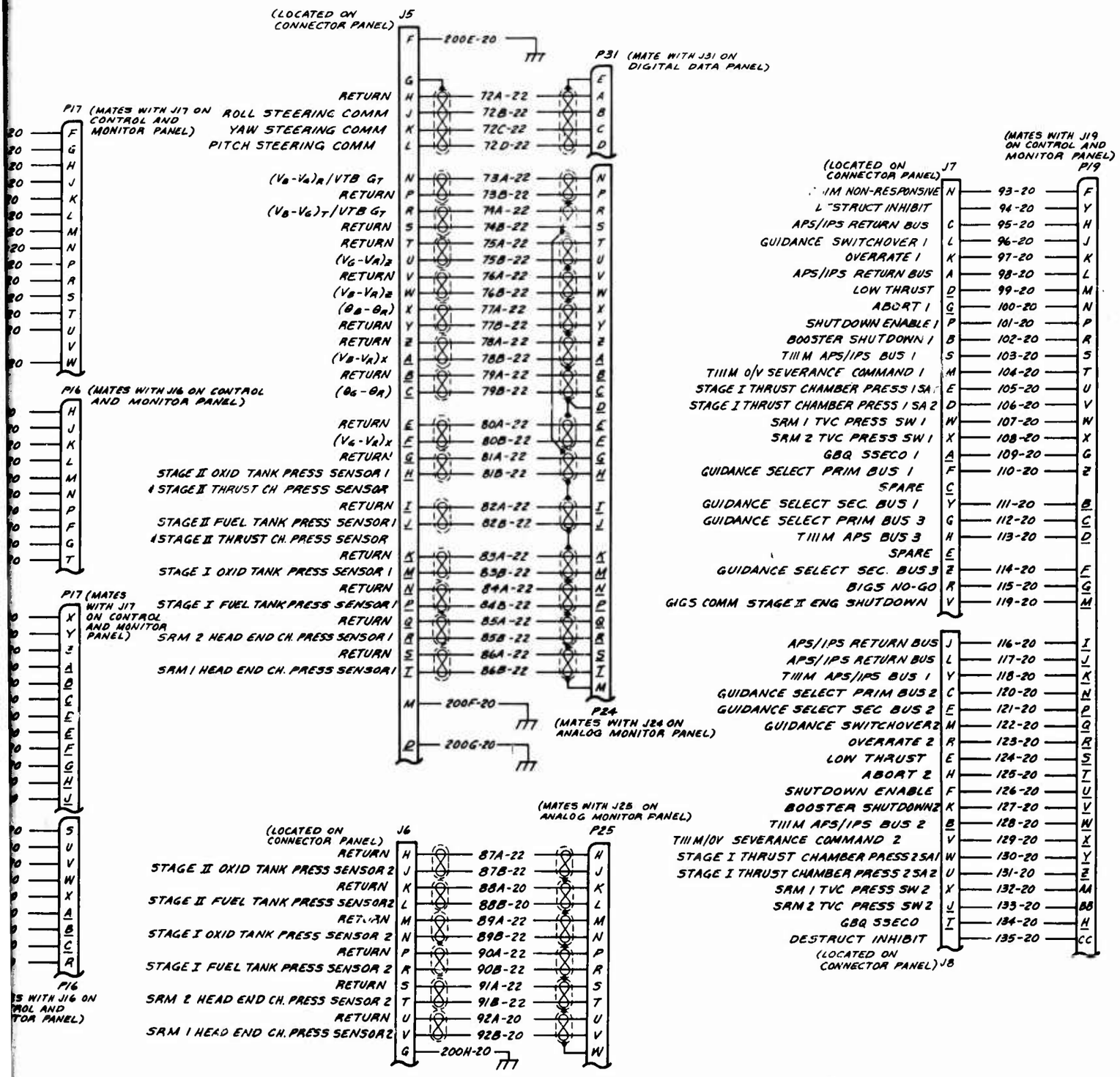
(LOCATED ON CONNECTOR PANEL) J5
200E-20
P31 (MATE WITH J31 ON DIGITAL DATA PANEL)
P17 (MATES WITH J17 ON CONTROL AND MONITOR PANEL)
RETURN 72A-22
ROLL STEERING COMM 72B-22
YAW STEERING COMM 72C-22
PITCH STEERING COMM 72D-22
(VB-VA)R/VTB GT 73A-22
RETURN 73B-22
(VB-VG)T/VTB GT 74A-22
RETURN 74B-22
RETURN 75A-22
(VG-VA)Z 75B-22
RETURN 76A-22
(VB-VA)Z 76B-22
(θB-θA) 77A-22
RETURN 77B-22
RETURN 78A-22
(VB-VA)X 78B-22
RETURN 79A-22
(θG-θA) 79B-22
P16 (MATES WITH J16 ON CONTROL AND MONITOR PANEL)
RETURN 80A-22
(VG-VA)X 80B-22
RETURN 81A-22
STAGE II OXID TANK PRESS SENSOR 1 & STAGE II THRUST CH PRESS SENSOR 81B-22
RETURN 82A-22
STAGE II FUEL TANK PRESS SENSOR 1 & STAGE II THRUST CH. PRESS SENSOR 82B-22
RETURN 83A-22
STAGE I OXID TANK PRESS SENSOR 1 83B-22
RETURN 84A-22
STAGE I FUEL TANK PRESS SENSOR 1 84B-22
RETURN 85A-22
SRM 2 HEAD END CH. PRESS SENSOR 1 85B-22
RETURN 86A-22
SRM 1 HEAD END CH. PRESS SENSOR 1 86B-22
P17 (MATES WITH J17 ON CONTROL AND MONITOR PANEL)
200F-20
P24 (MATES WITH J24 ON ANALOG MONITOR PANEL)
200G-20
(LOCATED ON CONNECTOR PANEL) J6
(MATES WITH J25 ON ANALOG MONITOR PANEL) P25
RETURN 87A-22
STAGE II OXID TANK PRESS SENSOR 2 87B-22
RETURN 88A-20
STAGE II FUEL TANK PRESS SENSOR 2 88B-20
RETURN 89A-22
STAGE I OXID TANK PRESS SENSOR 2 89B-22
RETURN 90A-22
STAGE I FUEL TANK PRESS SENSOR 2 90B-22
RETURN 91A-22
SRM 2 HEAD END CH. PRESS SENSOR 2 91B-22
RETURN 92A-20
SRM 1 HEAD END CH. PRESS SENSOR 2 92B-20
200H-20
P16 (MATES WITH J16 ON CONTROL AND MONITOR PANEL)
(MATES WITH J19 ON CONTROL AND MONITOR PANEL) P19
(LOCATED ON CONNECTOR PANEL) J7
IIIM NON-RESPONSIVE 93-20
DESTRUCT INHIBIT 94-20
APS/IPS RETURN BUS 95-20
GUIDANCE SWITCHOVER 1 96-20
OVERRATE 1 97-20
APS/IPS RETURN BUS 98-20
LOW THRUST 99-20
ABORT 1 100-20
SHUTDOWN ENABLE 1 101-20
BOOSTER SHUTDOWN 1 102-20
TIIIM APS/IPS BUS 1 103-20
TIIIM O/V SEVERANCE COMMAND 1 104-20
STAGE I THRUST CHAMBER PRESS 1 SA1 105-20
STAGE I THRUST CHAMBER PRESS 1 SA2 106-20
SRM 1 TVC PRESS SW 1 107-20
SRM 2 TVC PRESS SW 1 108-20
GBQ SSECO 1 109-20
GUIDANCE SELECT PRIM BUS 1 110-20
SPARE
GUIDANCE SELECT SEC. BUS 1 111-20
GUIDANCE SELECT PRIM BUS 3 112-20
TIIIM APS BUS 3 113-20
SPARE
GUIDANCE SELECT SEC. BUS 3 114-20
BIGS NO-GO 115-20
GIGS COMM STAGE II ENG SHUTDOWN 119-20
APS/IPS RETURN BUS 116-20
APS/IPS RETURN BUS 117-20
TIIIM APS/IPS BUS 1 118-20
GUIDANCE SELECT PRIM BUS 2 120-20
GUIDANCE SELECT SEC BUS 2 121-20
GUIDANCE SWITCHOVER 2 122-20
OVERRATE 2 123-20
LOW THRUST 124-20
ABORT 2 125-20
SHUTDOWN ENABLE 126-20
BOOSTER SHUTDOWN 2 127-20
TIIIM APS/IPS BUS 2 128-20
TIIIM/OV SEVERANCE COMMAND 2 129-20
STAGE I THRUST CHAMBER PRESS 2 SA1 130-20
STAGE I THRUST CHAMBER PRESS 2 SA2 131-20
SRM 1 TVC PRESS SW 2 132-20
SRM 2 TVC PRESS SW 2 133-20
GBQ SSECO 134-20
DESTRUCT INHIBIT 135-20
(LOCATED ON CONNECTOR PANEL) J8

B

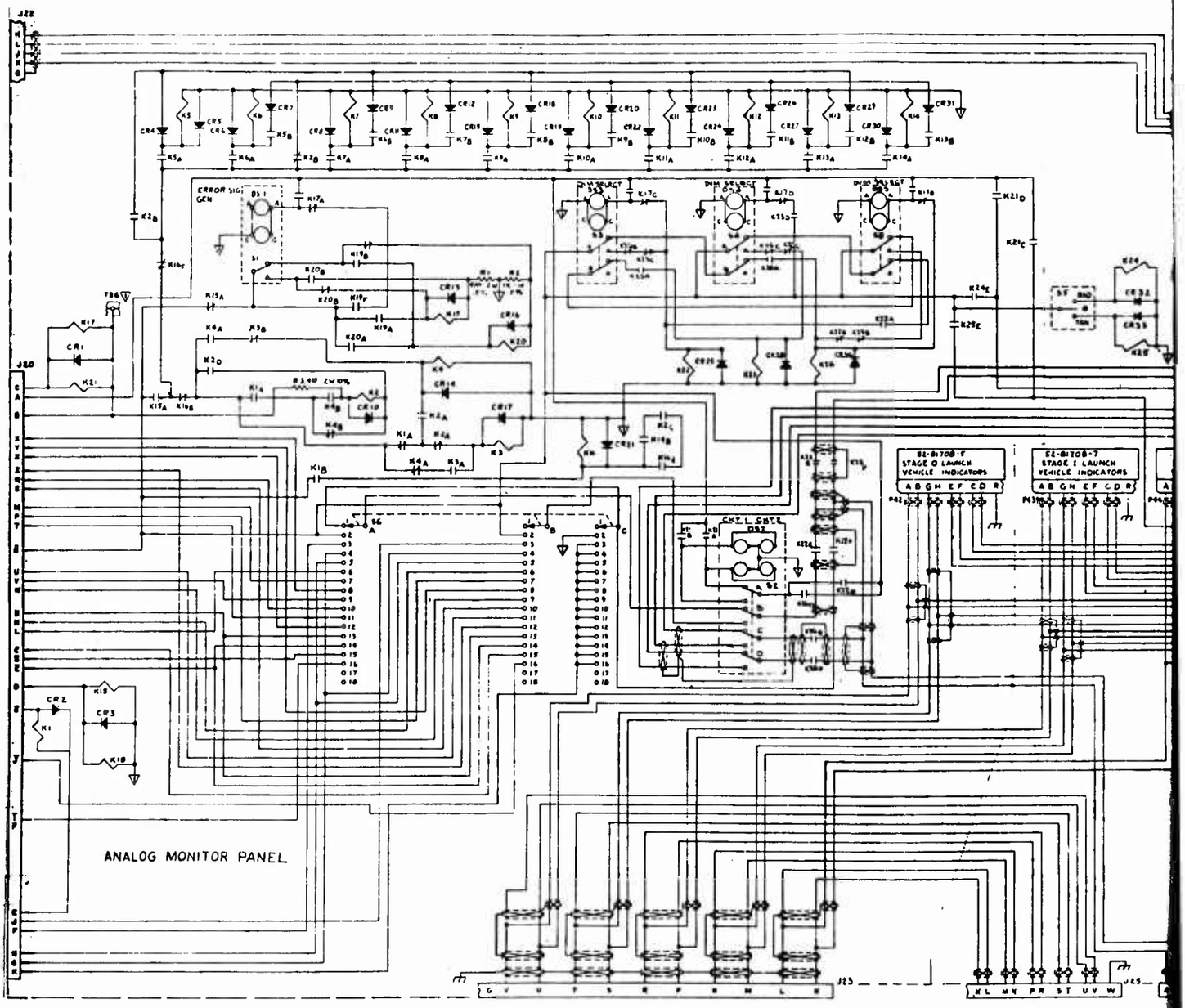
ANALOG MONITOR PANEL
ERROR SIG GEN
DIM SELECT
STAGE 0 LAUNCH VEHICLE INDICATORS
STAGE 1 LAUNCH VEHICLE INDICATORS
J22
J20
J23
J25

A

DATE 26 SEPTEMBER 1968

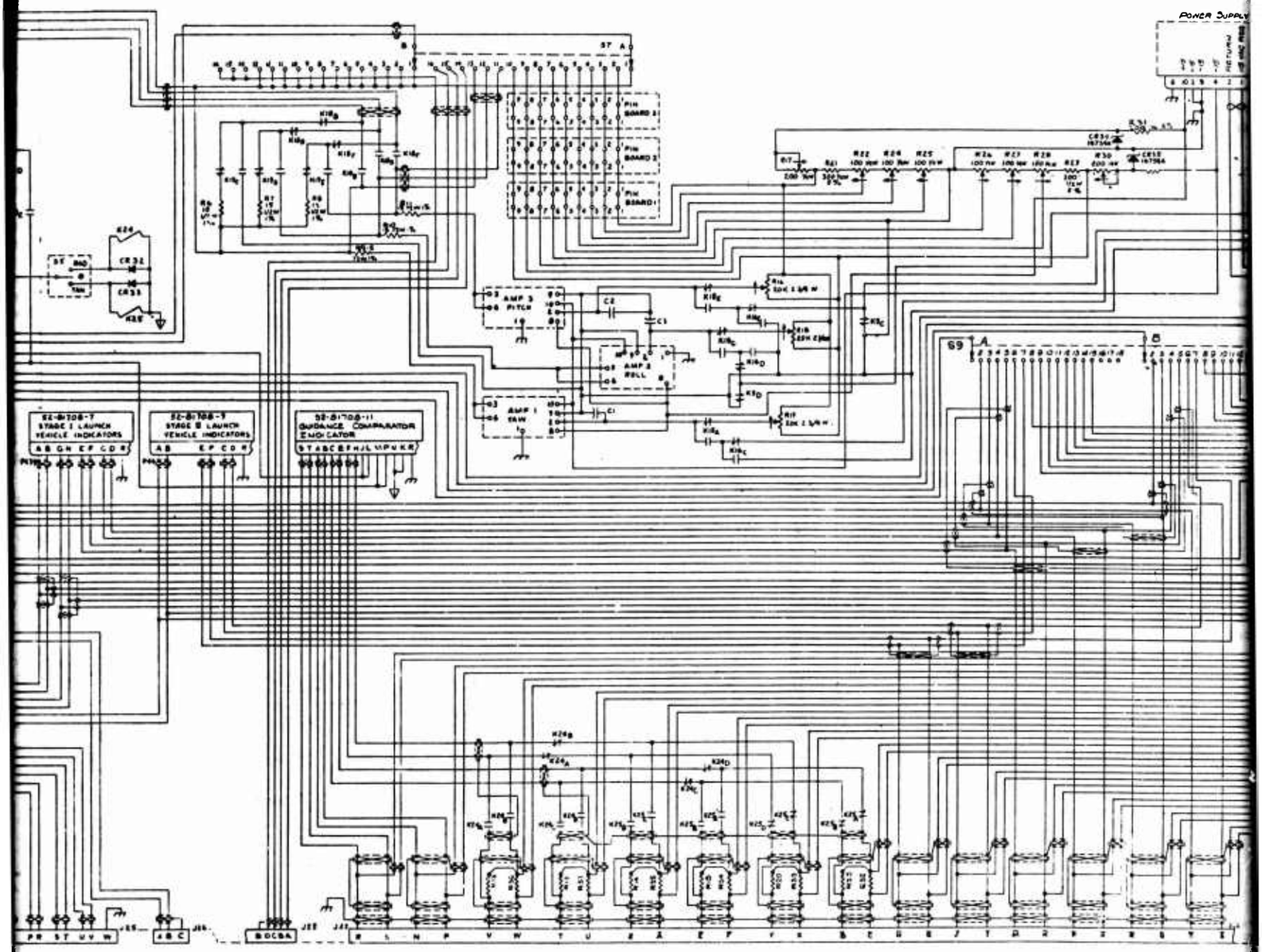

Figure 6-

B

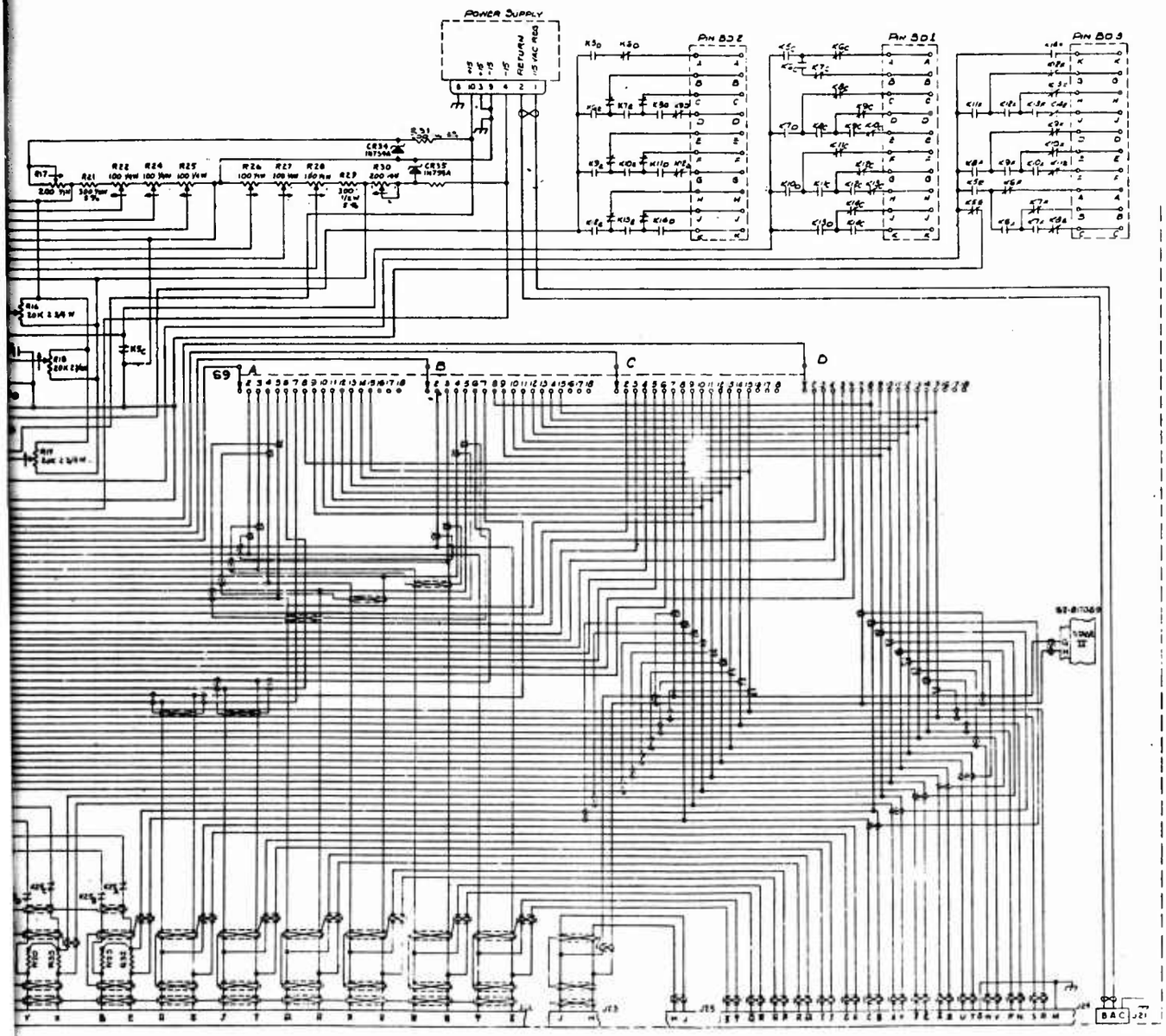

C

Figure 6-4 Analog Monitor Panel Schematic

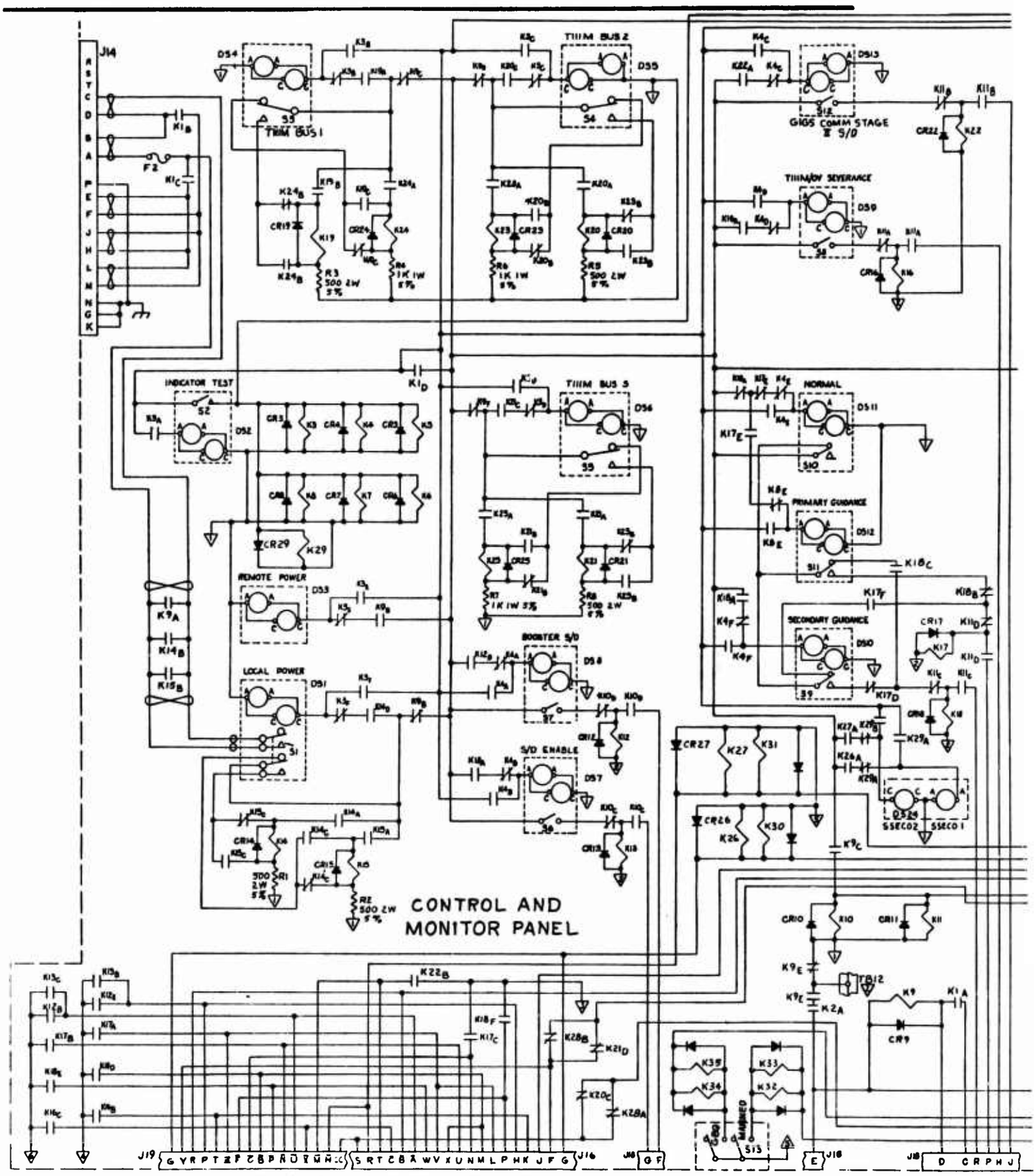

Figure 6-5 Control and Monitor Panel Schematic

A

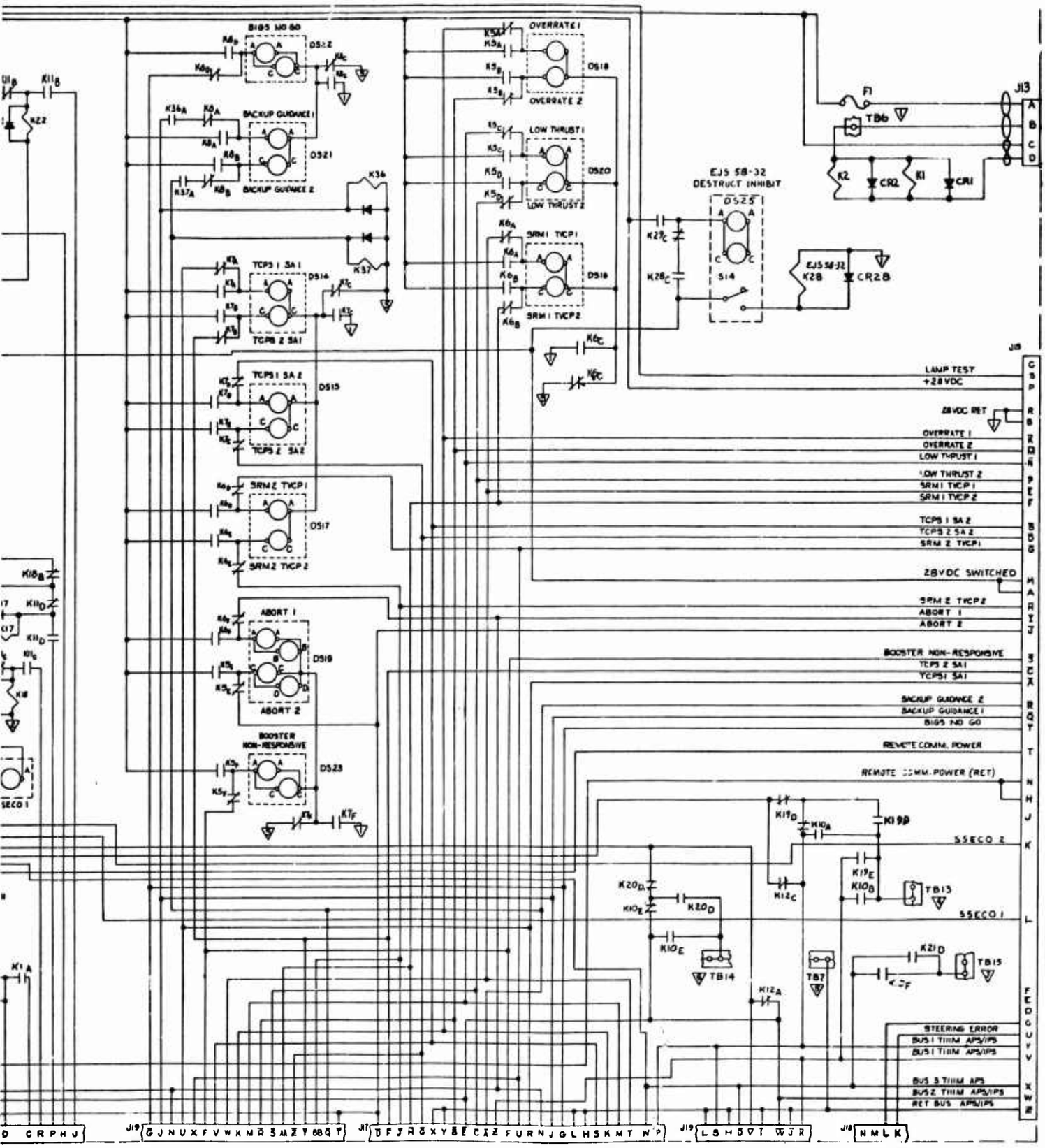
BIGS NO GO
DS22
BACKUP GUIDANCE 1
BACKUP GUIDANCE 2
DS21
OVERRATE 1
OVERRATE 2
DS18
LOW THRUST 1
LOW THRUST 2
DS20
SRM1 TVCP1
SRM1 TVCP2
DS16
TCPS 1 SA1
TCPS 2 SA1
DS14
TCPS1 SA2
TCPS 2 SA2
DS15
SRM2 TVCP1
SRM2 TVCP2
DS17
ABORT 1
ABORT 2
DS19
BOOSTER NON-RESPONSIVE
DS23
EJS 58-32
DESTRUCT INHIBIT
DS25
S14
EJS 58-32
K28
CR28
F1
TB6
J13
K2
CR2
K1
CR1
LAMP TEST
+28VDC
28VDC RET
OVERRATE 1
OVERRATE 2
LOW THRUST 1
LOW THRUST 2
SRM1 TVCP1
SRM1 TVCP2
TCPS 1 SA 2
TCPS 2 SA 2
SRM 2 TVCP1
28VDC SWITCHED
SRM 2 TVCP2
ABORT 1
ABORT 2
BOOSTER NON-RESPONSIVE
TCPS 2 SA1
TCPS1 SA1
BACKUP GUIDANCE 2
BACKUP GUIDANCE 1
BIGS NO GO
REMOTE COMM. POWER
REMOTE COMM. POWER (RET)
SSECO 2
SSECO 1
TB13
TB14
TB15
TB7
STEERING ERROR
BUS 1 THRM APS/IPS
BUS 1 THRM APS/IPS
BUS 3 THRM APS
BUS 2 THRM APS/IPS
RET BUS APS/IPS
J19
J17
J18

B

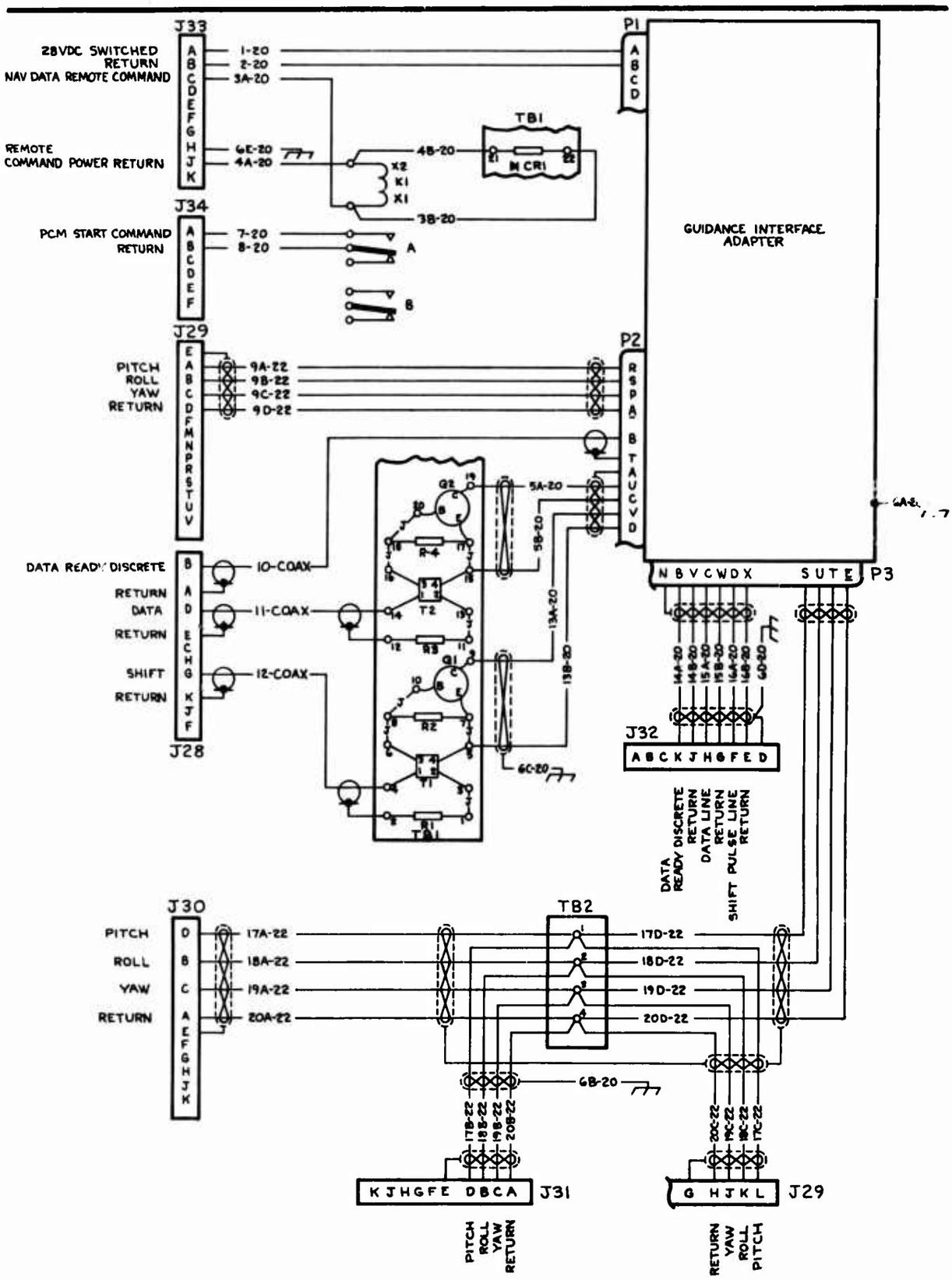

Figure 6-6 Digital Data Output Panel Schematic