UNCLASSIFIED

AD NUMBER
AD856658
NEW LIMITATION CHANGE
TO Approved for public release, distribution unlimited
FROM Distribution authorized to U.S. Gov't. agencies only; Administrative/Operational Use; 19 DEC 1967. Other requests shall be referred to the Air Force Space and Missile Systems Organization, Attn: SMSA [Office of Information], Los Angeles AFB, CA 90045.
AUTHORITY
SAMSO, per USAF ltr, dtd 16 Aug 1973

THIS PAGE IS UNCLASSIFIED

AD856658

FURTHER TRANSMISSION OF THIS DOCUMENT OUTSIDE THE AGENCIES OF THE US GOVERNMENT MUST HAVE PRIOR APPROVAL OF THE OFFICE OF INFORMATION (SMSA), SPACE & MISSILE SYSTEMS ORGANIZATION, AF UNIT P.O., LOS ANGELES, CA 90045

LIBRARY COPY
NO.
CONTROL NO.

RECEIVED
4 JAN 1968

DDC
RECEIVED
AUG 19 1969
B

MCDONNELL

19

EACH TRANSMISSION OF THIS DOCUMENT OUTSIDE
THE AGENCIES OF THE US GOVERNMENT MUST HAVE
PRIOR APPROVAL OF THE OFFICE OF INFORMATION
(SMEA), SPACE & MISSILE SYSTEMS ORGANIZATION,
AIR FORCE UNIT P.O., LOS ANGELES, CA 90045

Date 19 December 1967

Revised

AD 56658

FINAL REPORT

RE-ENTRY MODULE/ADAPTER INTERCONNECT FAIRING AERODYNAMIC HEATING WIND TUNNEL TESTS AEDC TUNNEL B

Report 058-ATD.02.01 Model Gemini B

Contract No. F04695-67-C-0023

Laboratories: Gas Dynamics Laboratories

Prepared By G. J. Sheldon
G. J. Sheldon
Senior Engineer

Approved By R. D. Hardin
R. D. Hardin
Test Director

Approved By L. A. Wood
L. A. Wood
Group Engineer

Approved By T. Pandolfi
T. Pandolfi
Laboratory Project Engineer

MCDONNELL COMPANY
LAMBERT-ST LOUIS MUNICIPAL AIRPORT
BOX 516, ST LOUIS, MO 63166

MCDONNELL

ST. LOUIS, MISSOURI

DATE

REVISED

REVISED

PAGE i

REPORT 058-ATD.02.01

MODEL Gemini B

INDEX OF REVISIONS

DATE	PAGES AFFECTED			REMARKS	REVISED BY	APPROVED
	REVISED	ADDED	REMOVED			

MAC 231A (REV 23 JUN 61)

ABSTRACT

Testing was conducted on three, 9 percent scale Gemini models and a 5.8-inch diameter hemisphere cylinder to obtain qualitative and semi-quantitative information on the local heat transfer rate induced on the Gemini afterbody by the module/adapter interconnect fairing. These models were cast using RTV 60 silicone rubber. A 0.3-inch minimum thickness of rubber was maintained over an aluminum core.

The Gemini models were tested at 160°, 165°, and 170° angle of attack. The hemisphere cylinder was tested at 0° angle of attack. Testing was conducted at Mach 8 at Reynolds numbers per foot of 3.8, 3.5, 3.0, 2.0, and 1.0×10^6. Prior to each run, models were coated with Detecto-Temp paint. Color motion pictures were made during the test to obtain color change data, and still photographs of the models were taken after each run. Forty-seven runs were completed during Series I tests and 27 runs during Series II tests. The motion pictures and still photographs have been forwarded to Department 242 for analysis.

These tests were performed in Tunnel B of the von Karman Gas Dynamics Facility, Arnold Engineering Development Center on 10 August 1967 (Series I) and 4 November 1967 (Series II).

This report completes work on TR 058-ATD.02.01.

TABLE OF CONTENTS

	Page Number
INDEX OF REVISIONS	i
ABSTRACT	ii
TABLE OF CONTENTS	iii
1. INTRODUCTION	1
2. MODEL DESCRIPTION	1 through 2
3. TEST SETUP	2
4. TEST PROCEDURE	2 through 3
5. TEST RESULTS	3
MODEL SKETCHES	4
TUNNEL INSTALLATION	6
RUN SCHEDULE AND TEST CONDITIONS	8
APPENDIX A - REFERENCES	11

1. INTRODUCTION

Testing was conducted on 9 percent scale Gemini rubber models and a 5.8-inch-diameter hemisphere cylinder to obtain qualitative and semi-quantitative information on the local heat transfer rate induced on the Gemini afterbody by the module/adapter interconnect fairing. The test was set up to obtain comparative information between the NASA GT2 fairing, the Gemini B low-profile fairing, and the model with no fairing. The analysis was to be made with theoretical heating rates on a reference hemisphere cylinder.

These tests were performed on models painted with Detecto-Temp paint in Tunnel B of the von Karman Dynamics Facility, Arnold Engineering Development Center (AEDC), on 10 August 1967 (Series I) and 4 November 1967 (Series II).

2. MODEL DESCRIPTION

Three 9 percent scale Gemini models were fabricated for the test program. Female plaster molds were made for each configuration of the Gemini to be tested. An existing 9 percent scale Gemini model was used as the master for the plaster molds. Inner cores were machined from 2024 T-3 aluminum and provided a gap of 0.3-inch minimum between the core and the mold. RTV 60 silicone rubber, which was exposed to a vacuum to remove air bubbles, was injected into the gap and allowed to cure at room temperature for 48 hours. The model was then removed from the mold and hand finished.

The Gemini configurations cast were:

(1) Gemini with the NASA fairing;

(2) Gemini with the Gemini B fairing; and

(3) Gemini without a fairing.

A similar casting technique was employed to cast a 5.8-inch diameter hemisphere cylinder using a female fiberglass mold furnished by AEDC. The

hemisphere cylinder was used as the calibration body during the test program. Sketches of the models are shown on pages 4 and 5.

All models were cast from the same batch of silicone rubber. The nominal thermal conductivity of the RTV 60 is 0.18 Btu-ft/hr-ft^2°R.

3. TEST SETUP

The models were installed in Tunnel B at AEDC using the hardware shown in the sketches on pages 6 and 7. Roll locking devices were not provided on the models during Series I tests and the Gemini model with the NASA fairing was inadvertently rolled an additional +7° from its intended test position. A roll locking device was installed on the models for Series II tests.

Two DBM-5A Millikan motion picture cameras were used to record the test on color film. One camera was located in the top forward window, the other in the side forward window. A bank of four iodized quartz lamps was located in the upper aft window. A similar bank of lamps was located in the side aft window to provide tunnel lighting. The cameras were focused on the afterbody of the Gemini model with a bore sight tool. Camera location and lens setting remained in the same position for the entire test program.

4. TEST PROCEDURE

Grid lines were drawn on the clean Gemini model and the hemisphere cylinder to provide a reference for film interpretation. Film sequences were made of the Gemini model at 160°, 165°, and 170° angle of attack, and of the hemisphere cylinder at 0° angle of attack.

The models were painted with Detecto-Temp paint (915-0979) and allowed to dry. Next, the models were installed on the sting support system in the model installation room beneath the tunnel test section.

When tunnel flow conditions were established, the motion picture cameras were started and the model was injected into the tunnel. An event marker was placed on the film when the model reached tunnel centerline. Visual observation of the model during the test for color changes and patterns was used as a guideline for the length of time the model remained in the tunnel.

After each test, the model was removed from the sting support system and a still color photograph was taken.

Testing was conducted on the four models at angles of attack of 160°, 165°, and 170° for the Gemini models and at 0° for the hemisphere cylinder. All tests were conducted at Mach 8 at Reynolds numbers per foot of 3.5, 3.0, 2.0, and 1.0×10^6 for Series I tests and at Reynolds numbers per foot of 3.8, 3.0, and 2.0×10^6 for Series II tests.

5. TEST RESULTS

Test results are:

(1) color movies;

(2) color negatives of still photographs; and

(3) a run schedule consisting of configuration, test conditions, and movie identification.

The color movies and still photographs have been forwarded to Department 242 for analysis.

The run schedule is presented in tables on page 8 through 10.

9 PERCENT SCALE GEMINI RUBBER MODELS

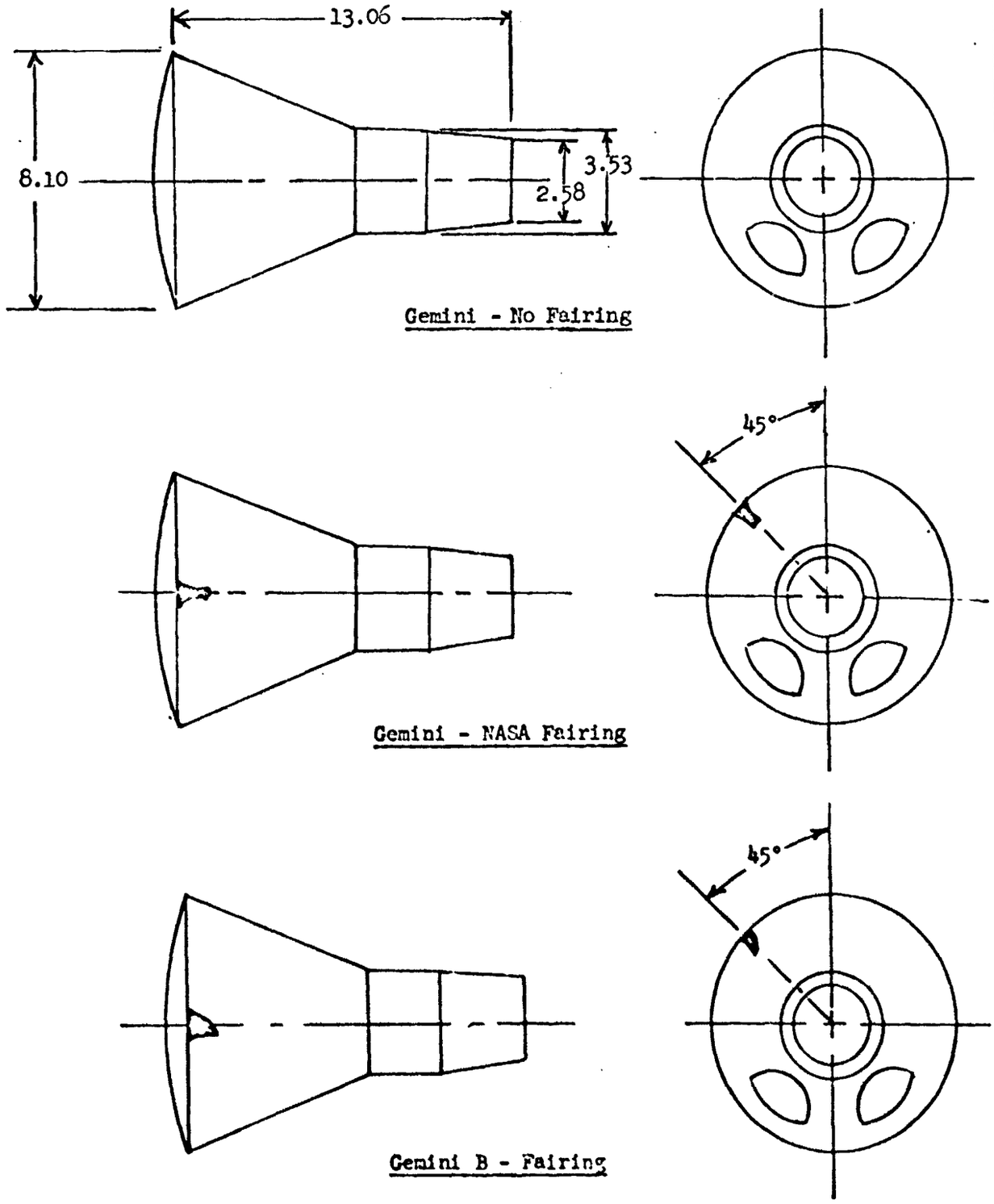

Note: Model Side View Rolled 45° For Fairing Clarity

HEMISPHERE CYLINDER

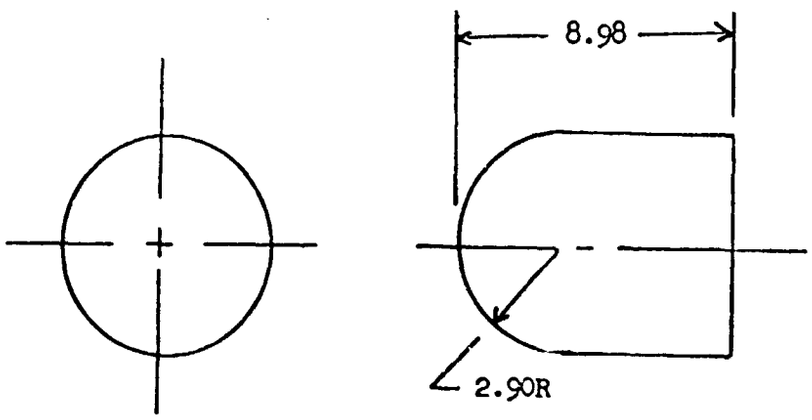

Material - RTV 60 Silicone Rubber

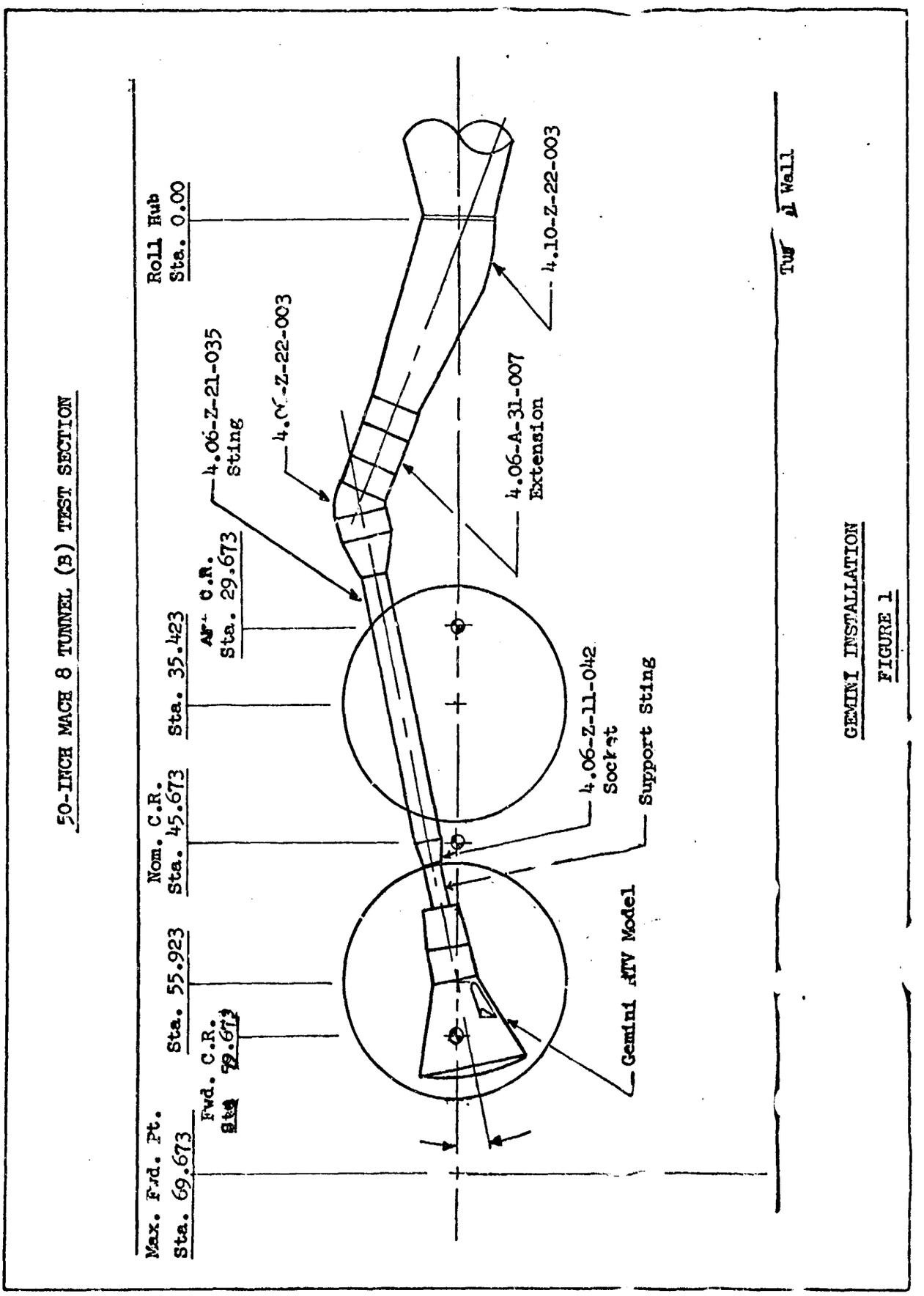

GEMINI INSTALLATION

FIGURE 1

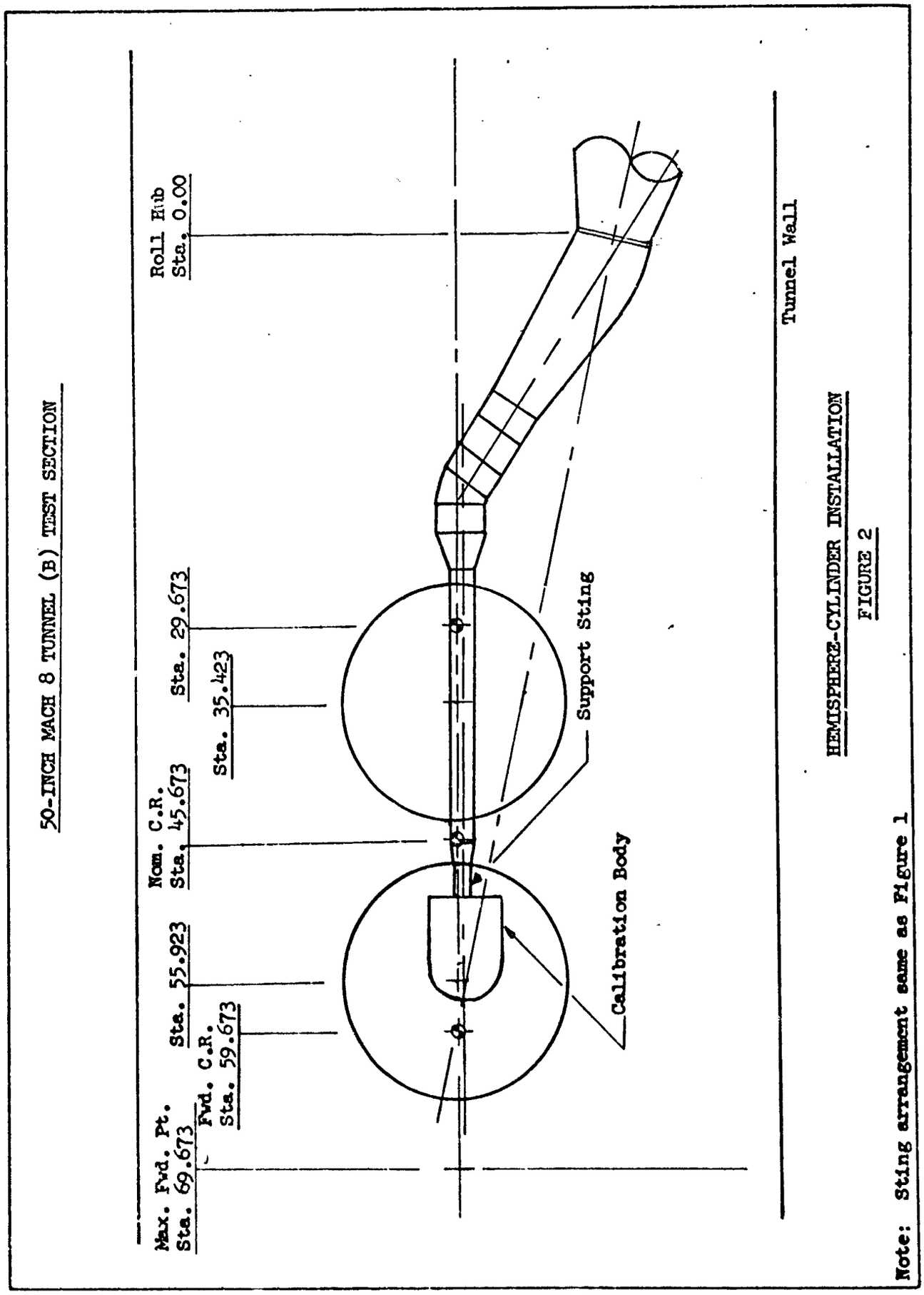
50-INCH MACH 8 TUNNEL (B) TEST SECTION
Roll Hub
Sta. 0.00
Sta. 29.673
Sta. 35.423
Nom. C.R.
Sta. 45.673
Sta. 55.923
Fwd. C.R.
Sta. 59.673
Max. Fwd. Pt.
Sta. 69.673
Support Sting
Calibration Body
Tunnel Wall
HEMISPHERE-CYLINDER INSTALLATION
FIGURE 2
Note: Sting arrangement same as Figure 1

DATE
REVISED
REVISED

MCDONN
ST. LOUIS, MISS

RUN SCHED

Series I

RUN	CONFIGURATION	TYPE RUN	M	Re/FT x 10^6	α (Deg)	P_o (psia)	T_o °R
1	Gemini + NASA Fairing	Heat Transfer	8.01	3.46	159.9	800.8	1348
2	Gemini + "B" Fairing			3.46	159.9	797.2	1342
3	Hemisphere Cylinder			3.45	160.0	803.2	1352
4	Gemini + NASA Fairing			3.44	164.9	798.6	1350
5	Gemini + "B" Fairing			3.43	165.0	799.2	1352
6	Gemini			3.45	166.5	800.0	1350
7	Hemisphere Cylinder			3.45	-0.1	800.2	1349
8	Gemini + "B" Fairing			3.45	170.1	800.2	1348
9	Gemini + NASA Fairing			3.48	169.9	800.2	1340
10	Gemini + "B" Fairing			3.50	160.0	799.0	1330
11	Gemini + NASA Fairing			3.52	160.0	802.8	1333
12	Gemini + NASA Fairing		8.00	2.98	159.9	670.5	1324
13	Gemini + "B" Fairing			3.01	160.0	672.3	1318
14	Hemisphere Cylinder			2.98	0	669.1	1322
15	Gemini + NASA Fairing			2.99	164.9	668.3	1318
16	Gemini + "B" Fairing			2.99	165.0	673.4	1325
17	Gemini			2.96	165.0	671.9	1332
18	Gemini + NASA Fairing			2.98	169.9	673.4	1320
19	Gemini + "B" Fairing			2.95	170.0	667.9	1330
20	Hemisphere Cylinder			2.95	170.0	667.9	1330
21	Gemini + NASA Fairing		7.97	1.90	160.0	416.6	1311
22	Gemini + "B" Fairing			1.96	159.9	424.6	1302
23	Hemisphere Cylinder			1.95	+0.1	421.1	1299
24	Gemini + NASA Fairing			1.95	164.9	420.7	1298
25	Gemini + "B" Fairing			1.96	164.9	422.1	1295

NOTES:

A

MCDONNELL
ST. LOUIS, MISSOURI

RUN SCHEDULE

o (a)	T_0 °R	P_{01} (psia)	P_∞ (psia)	V_∞ Ft/Sec.	q_∞ (psia)	ρ_∞ Slug/ft^3	Ttw °R	RUN	Movie Identification: Side Reel	Side I.D. No.	Top Reel	Top I.D. No.
.8	1348	6.76	.0814	3875	3.65	x 10^{-5} 7.00	571	1	1	04410	1	04411
.2	1342	6.73	.0810	3866	3.64	7.00	571	2				
.2	1352	6.78	.0816	3880	3.66	7.00	572	3				
.6	1350	6.74	.0811	3878	3.64	6.98	572	4				
.2	1352	6.76	.0812	3880	3.65	6.97	572	5				
.0	1350	6.75	.0813	3878	3.65	6.99	573	6				
.2	1349	6.75	.0813	3876	3.65	6.99	572	7			2	04412
.2	1348	6.75	.0813	3875	3.65	7.00	572	8				
.2	1340	6.75	.0813	3863	3.65	7.04	572	9	2	04413		
.0	1338	6.74	.0812	3857	3.65	7.05	572	10				
.8	1333	6.78	.0816	3853	3.66	7.10	572	11				
.5	1324	5.69	.0687	3840	3.08	6.01	569	12				
.3	1318	5.70	.0689	3831	3.08	6.05	568	13				
.1	1322	5.68	.0685	3837	3.07	6.00	568	14				
.3	1318	5.67	.0685	3831	3.07	6.01	568	15				
.4	1325	5.71	.0689	3841	3.09	6.02	568	16			3	04414
.9	1332	5.70	.0688	3851	3.08	5.98	568	17				
.4	1328	5.72	.0690	3845	3.09	6.01	568	18				
.9	1330	5.67	.0684	3848	3.06	5.96	568	19	3	04415		
.9	1330	5.67	.0684	3848	3.06	5.96	568	20				
.6	1311	3.60	.0437	3820	1.94	3.83	562	21				
.6	1302	3.67	.0446	3807	1.96	3.94	561	22				
.1	1299	3.64	.0442	3802	1.97	3.91	561	23				
.7	1298	3.63	.0442	3800	1.96	3.91	560	24	4	04417	4	04416
.1	1295	3.64	.0443	3796	1.97	3.93	560	25				

B

DATE
REVISED
REVISED

MCDONN
ST. LOUIS, MI

RUN SCHE

RUN	CONFIGURATION	TYPE RUN	M	Re/Ft x 10^6	α (Deg)	P_o (psia)	T_o °R
Series I							
26	Gemini	Heat Transfer	7.97	1.97	165.0	423.7	1296
27	Gemini + NASA Fairing			1.93	170.1	421.1	1306
28	Gemini + "B" Fairing			1.96	170.0	422.3	1298
29	Hemisphere Cylinder			1.96	0	420.1	1293
30	Gemini + NASA Fairing		7.92	0.95	159.9	191.8	1258
31	Gemini + "B" Fairing			0.97	159.9	191.2	1238
32	Hemisphere Cylinder			0.98	0	191.2	1227
33	Gemini + NASA Fairing			0.99	165.0	192.6	1224
34	Hemisphere Cylinder			0.97	0	190.0	1232
35	Gemini + "B" Fairing			0.96	165.0	191.0	1242
36	Gemini			0.97	164.9	19[illegible].4	1250
37	Gemini + NASA Fairing			0.95	170.0	190.6	1253
38	Gemini + "B" Fairing			0.94	170.[illegible]	188.9	1251
39	Hemisphere Cylinder			0.96	0.1	1[illegible]	1249
40	Gemini + "B" Fairing			0.97	165.1	192.2	1244
41	Gemini + "b" Fairing		8.01	[illegible]	165.1	800.2	1353
42	Gemini + NASA Fairing			3.43	165.1	801.0	1357
43	Gemini + "B" Fairing			3.38	165.1	797.0	1[illegible]
44	Gemini + NASA Fairing			3.45	165.1	800.0	1350
45	Gemini + "B" Fairing			3.47	159.9	801.0	1347
46	Gemini + NASA Fairing			3.44	160.1	77[illegible].1	1340
47	Hemisphere Cylinder			3.46	0.1	801.2	1349
Series II							
1	Gemini + NASA Fairing	Heat Transfer	8.02	[illegible]	[illegible]	694.4	1305
2	Gemini + "B" Fairing			3.68	160	[illegible]	1308

NOTES

A

MCDONNELL
ST. LOUIS, MISSOURI

RUN SCHEDULE

	T_o °R	P_{o1} (psia)	P_∞ (psia)	V_∞ Ft/Sec.	q_∞ (psia)	ρ_∞ Slug/Ft^3 x 10^{-5}	T_{tw} °R	RUN	Movie Identification Side Reel	Side I.D. No	Top Reel	Top I.D. No.
)	1296	3.66	.0445	3798	1.98	3.94	560	26	4	04417	4	04416
1	1306	3.64	.0442	3812	1.97	3.89	560	27	↓	↓	↓	↓
3	1298	3.65	.0443	3801	1.97	3.93	560	28	↓	↓	5	04418
1	1293	3.63	.0441	3793	1.96	3.92	560	29	5	04419	↓	↓
3	1258	1.70	.0210	3740	0.92	1.89	552	30	↓	↓	↓	↓
2	1238	1.70	.0209	3710	0.92	1.91	551	31	↓	↓	6	04420
2	1227	1.70	.0209	3694	0.92	1.94	550	32	6	04421	↓	↓
5	1224	1.71	.0211	3689	0.92	1.96	550	33	↓	↓	↓	↓
0	1232	1.69	.0208	3701	0.91	1.92	550	34	↓	↓	7	04422
0	1242	1.70	.0209	3716	0.92	1.91	550	35	↓	↓	↓	↓
4	1250	1.71	.0211	3728	0.93	1.92	550	36	↓	↓	↓	↓
6	1253	1.69	.0208	3732	0.92	1.89	550	37	7	04423	8	04424
9	1251	1.68	.0206	3730	0.91	1.88	550	38	↓	↓	↓	↓
8	1249	1.70	.0210	3727	0.92	1.91	550	39	↓	↓	↓	↓
2	1244	1.71	.0211	3719	0.92	1.92	550	40	8	04425	9	04426
2	1353	0.70	.0016	3853	3.66	7.10	566	41	↓	↓	10	04428
6	1357	0.77	.0014	3888	3.66	0.96	569	42	↓	↓	↓	↓
0	1360	0.73	.0010	3900	3.64	0.88	570	43	9	04427	↓	↓
0	1350	0.75	.0013	3876	3.65	0.99	571	44	↓	↓	↓	↓
6	1347	0.77	.0014	3873	3.66	7.02	571	45	↓	↓	11	04429
1	1340	0.71	.0008	3875	3.63	0.95	571	46	↓	↓	↓	↓
2	1340	0.76	.0014	3876	3.66	7.00	571	47	↓	↓	↓	↓
							Initial Model Temp.					
.4	1365	7.54	.0906	3928	4.08	7.01	525	1	1	4010	1	4015
3	1366	7.53	.0905	3946	4.07	7.53	525	2	↓	↓	↓	↓

B

DATE
REVISED
REVISED

MCDONNEL
ST. LOUIS, MISSOU

RUN SCHEDUL

Series II

RUN	CONFIGURATION	TYPE RUN	M	Re/Ft x 10^6	α (deg)	P_o (psia)	T_o °R
3	Hemisphere Cylinder	Heat Transfer	8.02	3.68	0	899.0	1393
4	Gemini + NASA Fairing			3.73	165	898.8	1382
5	Gemini + "B" Fairing			3.75	165	900.0	1378
6	Hemisphere Cylinder			3.73	0	899.0	1382
7	Gemini + NASA Fairing			3.70	170	894.1	1388
8	Gemini + "B" Fairing			3.72	170	898.5	1383
9	Hemisphere Cylinder			3.82	0	901.0	1361
10	Gemini + NASA Fairing		8.00	2.87	160	666.4	1354
11	Gemini + "B" Fairing			2.99	160	672.4	1324
12	Hemisphere Cylinder			2.94	0	664.4	1329
13	Gemini + NASA Fairing			2.92	165	669.7	1342
14	Gemini + "B" Fairing (Roll Angle Incorrect)			2.92	165	669.0	1340
15	Gemini + NASA Fairing			3.01	170	671.6	1319
16	Gemini + "B" Fairing			2.94	170	671.5	1338
17	Hemisphere Cylinder			2.93	0	669.7	1338
18	Gemini + NASA Fairing			2.95	165	672.9	1337
19	Gemini + "B" Fairing (Repeat of Run 14)			2.94	165	672.0	1336
20	Hemisphere Cylinder			2.94	0	670.9	1336
21	Gemini + NASA Fairing (Model Rolled +7°)			2.95	160	673.2	1340
22	Gemini + "B" Fairing		7.97	1.94	160	422.3	1306
23	Gemini + NASA Fairing			1.98	160	421.2	1305
24	Hemisphere Cylinder			1.95	0	419.6	1296
25	Gemini + "B" Fairing			1.92	165	419.6	1306
26	Gemini + NASA Fairing			1.90	165	416.3	1316
27	Hemisphere Cylinder			1.91	0	420.7	1310

NOTES:

MCDONNELL
ST. LOUIS, MISSOURI

RUN SCHEDULE

a)	T_o °R	P_{c1} (psia)	P_∞ (psia)	V_∞ Ft/Sec	q_∞ (psia)	ρ_∞ Slug/Ft³	Initial Model Temp.	RUN	Movie Identification Side Reel	Side I.D. No.	Top Reel	Top I.D. No.
0	1393	7.54	.0906	3939	4.07	x 10-5 7.56	528	3	1	4616	1	4615
8	1382	7.54	.0906	3924	4.07	7.62	536	4				
0	1378	7.55	.0907	3918	4.08	7.65	536	5				
0	1362	7.54	.0906	3924	4.07	7.62	530	6				
1	1388	7.54	.0906	3932	4.08	7.59	530	7				
5	1383	7.54	.0905	3925	4.07	7.61	532	8			2	4614
0	1361	7.56	.0908	3894	4.09	7.70	528	9	2	4617		
4	1354	5.65	.0683	3883	3.05	5.83	539	10				
4	1324	5.70	.0689	3840	3.08	6.02	528	11				
4	1329	5.64	.0681	3847	3.05	5.92	527	12				
7	1342	5.68	.0686	3866	3.07	5.91	531	13				
0	1340	5.67	.0685	3863	3.07	5.92	534	14				
8	1319	5.72	.0688	3832	3.08	6.04	534	15				
5	1338	5.70	.0688	3860	3.08	5.95	535	16			3	4613
7	1338	5.68	.0686	3860	3.07	5.93	532	17	3	4618		
9	1337	5.71	.0689	3858	3.08	5.96	539	18				
0	1338	5.74	.0688	3860	3.08	5.95	537	19				
9	1338	5.69	.0687	3860	3.07	5.94	534	20				
2	1340	5.71	.0690	3863	3.08	5.95	535	21				
3	1306	3.64	.0443	3812	1.97	3.9	537	22				
2	1289	3.63	.0442	3732	1.96	3.95	537	23			4	4612
0	1290	3.62	.0440	3739	1.95	3.9	535	24	4	4619		
8	1300	3.62	.0441	3812	1.95	3.87	536	25				
3	1310	3.61	.0439	3827	1.95	3.8	537	26				
7	1310	3.63	.0442	3827	1.96	3.8	536	27				

B

APPENDIX A - REFERENCES

Model Drawings

Drawing Number	Description
58W03-00066	General Assembly
58W03-00067	Casting Core - Gemini "B"
58W03-00068	Support Sting
58W03-00069	Core - Hemisphere Cylinder
58W03-00070	Hemisphere Cylinder Casting Assembly
58W03-00071	Female Mold - Gemini "B"
58W03-00072	Tunnel Installation
58W03-00073	Fairing - Gemini "B"
58W03-00062	Fairing - NASA GT2

Related Test

TR 052-ATD.02	Gemini B Re-Entry Module/Adapter Attachment Fairing Aerodynamic Heating Wind Tunnel Test