UNCLASSIFIED

AD NUMBER

AD856220

NEW LIMITATION CHANGE

TO

Approved for public release, distribution unlimited

FROM

Distribution authorized to U.S. Gov't. agencies and their contractors; Critical Technology; 14 JUL 1969. Other requests shall be referred to Naval Air Development Center, Warminster, PA 16974.

AUTHORITY

USNADC ltr, 5 Oct 1971

THIS PAGE IS UNCLASSIFIED

DEPARTMENT OF THE NAVY
NAVAL AIR DEVELOPMENT CENTER
JOHNSVILLE
WARMINSTER, PA. 18974

Aero-Electronic Technology Department

REPORT NO. NADC-AE-6864

14 July 1969

AD-856 220

DEVELOPMENT OF TOW CABLES FOR AN/ASQ-81 HELICOPTER TOWED MAD

PHASE REPORT
AIRTASK NO. A37533029/2021/F101-06-01
Work Unit No. 5

Five non-magnetic tow cable samples were evaluated for electrical and physical characteristics. The best tow cable had preformed and post-stressed armor made of silver plated beryllium copper and made use of teflon insulation for the electrical conductors.

Reported by: I. R. DiLorenzo
I. R. DiLorenzo
Applied Research Division

Approved by: William S. Lee
W. S. Lee, Superintendent
Applied Research Division

Donald W. Mackiernan
D. W. Mackiernan
Technical Director

This document is subject to special export controls and each transmittal to foreign governments or foreign nationals may be made only with prior approval of COMNAVAIRDEVCEN or COMNAVAIRSYSCOM (AIR-6022).

SUMMARY

INTRODUCTION

Nonmagnetic tow cables for use in the AN/ASQ-81 MAD helicopter towed system were developed and manufactured by Bergen Wire Rope Company, Boston Insulated Wire and Cable Company (Rochester Ropes, Incorporated, subcontractor), and United States Steel Corporation to the NAVAIRDEVCEN specifications. The tow cable was designed to function as the electrical and mechanical link between the helicopter and the towed vehicle. The towed vehicle contains the magnetic sensor and was streamed in flight with cable lengths up to 175 feet. The tow cable consisted of strain members to withstand mechanical loads, electrical conductors to provide power to the magnetometer, and electrical conductors to bring the magnetometer output to the aircraft electronics. Coupled with these requirements, the design objective was to obtain the smallest diameter cable that could be made for the purpose. A small diameter cable, less than 0.18 inch, effectively improves the aerodynamic performance of the towed vehicle by reducing cable drag (air friction) and cable oscillation (Phillips Effect).

Specifications for cable samples received from three cable suppliers are given in this report. Records of actual breaking strength tests and a specification sheet for the most suitable beryllium copper alloy are also included.

RESULTS

1. Undesired maneuver noise, generated by tow cables containing magnetic materials was eliminated by using tow cables made with beryllium copper.

2. Mechanical strength and electrical conductivity for the helicopter MAD tow cable requirements was provided by beryllium copper alloy (No. 25) strain member wires.

3. A small diameter tow cable permitted improved aerodynamic stability of the towed vehicle over a wide speed range.

4. Plating of the beryllium-copper strain member with silver prevented corrosion and improved the wear characteristics of the cable.

5. Preforming and post-stressing (special mill processes employed during the manufacturing of the strain member wires and the cable) of the strain member wires reduced kinking and birdcaging (strands spreading) when the cable was handled.

CONCLUSIONS

The five tow cables described in this report are suitable for use with the AN/ASQ-81 helicopter towed MAD system; however, sample No. 3 is superior to the others.

RECOMMENDATION

It is recommended that the cable design used in sample No. 3 be accepted for the AN/ASQ-81 helicopter towed MAD program.

TABLE OF CONTENTS

		Page
SUMMARY		iii
	Introduction	iii
	Results	iii
	Conclusions	iv
	Recommendation	iv
DISCUSSION		1
FIGURES		
1	Tow Cable Construction, Sample No. 1	4
2	Tow Cable Construction, Sample No. 2	5
3	Tow Cable Construction, Sample No. 3	6
4	Tow Cable Construction, Sample No. 4	7
5	Tow Cable Construction, Sample No. 5	8
6	Tow Cable Construction - Cross-Section, Nomenclature	9
7	Break Test, Sample No. 1 (Length 24 In., Breaking Strength 1300 Lb)	10
8	Break Test, Sample No. 2 (Sample Length 24 In.)	11
9	Break Test, Sample No. 3 (Sample Length 24 In.)	12
10	Break Test, Sample No. 4 (Sample Length 24 In.)	13
11	Break Test, Sample No. 5 (Sample Length 24 In.)	14

DISCUSSION

The problem of fabricating a small diameter tow cable suitable for towing the MAD sensor package from a helicopter was resolved with the joint efforts of NAVAIRDEVCEN and several cable manufacturers. The quantity and the size of the wires used in the two helical wound strain members for the small diameter cable were limited by the type of machinery used by the cable manufacturers.

The tow cable for the helicopter towed MAD system must be free of magnetic inclusions, otherwise any change in position of the cable relative to the MAD sensor will be picked up as noise and will reduce the effectiveness of the MAD system.

In addition to the small size and magnetic cleanliness requirements, the cable must have other qualifications. It must be capable of passing over a small pulley, wind and rewind on a small winch with a minimum of wear and with no damage to the inner conductors[1 2]. Beryllium copper alloy No. 25 was chosen for the strain member wires because it is highly nonmagnetic and possesses the desired physical and electrical properties listed below:

Composition:	Nominal - Beryllium 1.80 - 2.05%; Cobalt 0.18% - 0.30%; Copper Balance
Electrical Conductivity:	Percent of Pure Copper IACS - 21 to 25%
Density:	At 68° F (20° C): 8.23 grams per cu cm (0.297 lb/cu in.)
Elastic Modulus:	Tension 19,000,000 - Torsion 7,300,000
Melting Temperature:	1600-1800 degrees F (incipient fusion approx 1535 degrees F)
Heat Treatment:	Stress relief - 1/2 hr at 400 to 500 degrees F to relieve detrimental forming stresses and develop optimum properties
Specifications:	No available standards: Meets ASTM and QQ-C requirements for composition. Spring temper material properly stress-relieved equals the spring characteristics of heat treated No. 25 alloy of the same tensile strength.

1. *Spec No. MIL-C-5424A; Cable-Steel (Corrosion-Resistant), Flexible, Preformed (For Aeronautical Use); 20 Feb 1964.*
2. *Spec No. MIL-W-81381 (AS); Wire, Electric, Polymide-Insulated, Copper and Copper Alloy; 15 Oct 1966.*

Since the tow cables were designed for minimum overall outside diameter to meet aerodynamic requirements, the size of the inner coaxial cable conductor was limited. Since standard nonmagnetic coaxial cable of the size required for the inner cable was not available, a small coaxial cable with stranded inner conductor for flexibility was designed and manufactured for this application.

Physical characteristics of five samples tested are given in figures 1 through 5. It was noted that one manufacturer had machinery that could fabricate a cable with the same size strain members in both layers while another manufacturer had machinery capable of fabricating a cable with equal numbers of wires for each layer but of different sizes.

Figure 6 shows a cross-section of the tow cable construction.

Figures 7 through 11 show machine traces of actual breaking strength tests, recorded on a Tinius Olsen Testing Machine Company extensometer, of five samples each 2 feet long. It can be seen that the larger diameter cables have a breaking strength of 1800 pounds or slightly more.

The original cable design, sample No. 1, was not plated with silver. It exhibited evidence of corrosion after moderate use. Since MAD equipment is always used over the sea, later samples were plated with silver to reduce corrosion caused by salt water. The silver plating not only prevented corrosion but also permitted the manufacturer to draw the cable more efficiently through dies. It also reduced abrasive action between strain wires by acting as a lubricant.

A hardness rating of "half-hard" for the beryllium copper alloy strain member wires was preferred over "one-quarter hard" because preforming of the wires and post-stressing of the cable could be accomplished more effectively (See paragraph 3.1.2[1].). The preforming and post-stressing processes prevented the cable from detrimental deformation when under varying cable stress and handling conditions.

The beryllium copper alloy No. 25 and 125 were both nonmagnetic.

The insulation used in samples No. 1 and 2 was not as durable under extreme physical conditions (temperature changes and mechanical abuse) as the insulation used on the other three cables. Sample No. 4 has the most sophisticated design and costliest construction of the five tow cable samples. It could be used for high speed fixed-wing aircraft as well as for helicopter applications. The inner conductor shield was a braid with coverage of 95 percent nominal, which is the highest obtainable in standard cable construction. High braid coverage is desired because it provides better shielding as well as higher electrical conductivity.

---

1. *See pg 1.*

The smallest cross-section size to be used for the inner conductor was determined by considering the maximum line voltage drop permissible with a cable length of 200 feet. The type of insulation and thickness were chosen to provide safe conductor-to-conductor breakdown voltage and to provide for suitable line impedance. The characteristic impedance, Z, for the signal coaxial cables of the five samples was calculated to be approximately 22.5 ohm at 1.0 mhz, from

$$Z = 1/\sqrt{K} \quad 138 \log b/a$$

where the dielectric constant K at 1.0 mhz for

Teflon = 2.1
Polyethlene = 2.3
Nylon = 3.5

and b/a is the ratio of the inner diameter of the braid, b, to the outer diameter of the inner conductor, a. The results are shown as follows:

Sample	K	a	b	Z
1	2.3	0.021	0.038	23.5
2	2.3	0.025	0.043	21.3
3	2.1	0.025	0.043	22.4
4	2.4	0.032	0.056	21.6
5	2.1	0.032	0.056	23.1

The values for dc resistance and capacitance shown on figures 2 through 6 for the five samples were obtained by measurements made with a General Radio Company impedance bridge.

Several flight tests were made in the Johnsville, Pennsylvania, area to study the Phillips Effect (an oscillatory effect of a towed vehicle caused by insufficient tension on the tow cable) when the MAD vehicle was towed by an SH-3A helicopter using the original 0.18-inch diameter tow cable. The cable oscillation (Phillips Effect) generates noise which degrades the MAD performance. The addition of five pounds of lead weight at the center-of-gravity of the tow vehicle and an increase in tow vehicle drag skirt area reduced the Phillips Effect considerably. Since it was undesirable to increase the weight and size of the towed vehicle to achieve acceptable aerodynamic stability, a smaller (0.157-inch diameter) tow cable was designed. Flight tests indicated that the smaller diameter tow cable reduced the Phillips Effect to an acceptable level.

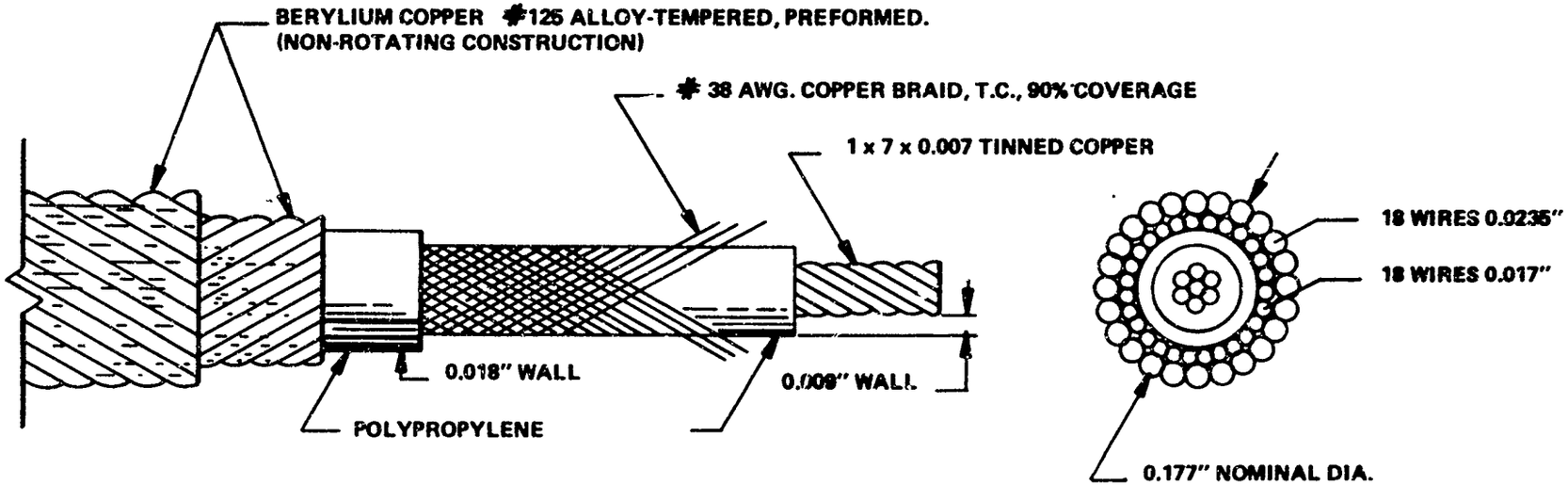

NOMINAL VALUES:
CONDUCTOR TO SHIELD CAPACITANCE: 64 PF/FT.
CONDUCTOR RESISTANCE: 18.5 OHMS/MFT.
ARMOR RESISTANCE: 3.9 OHMS/MFT.
BRAID RESISTANCE: 16.5 OHMS/MFT.

WT: 60 LBS./1000 FT.

FIGURE 1 - Tow Cable Construction, Sample No. 1

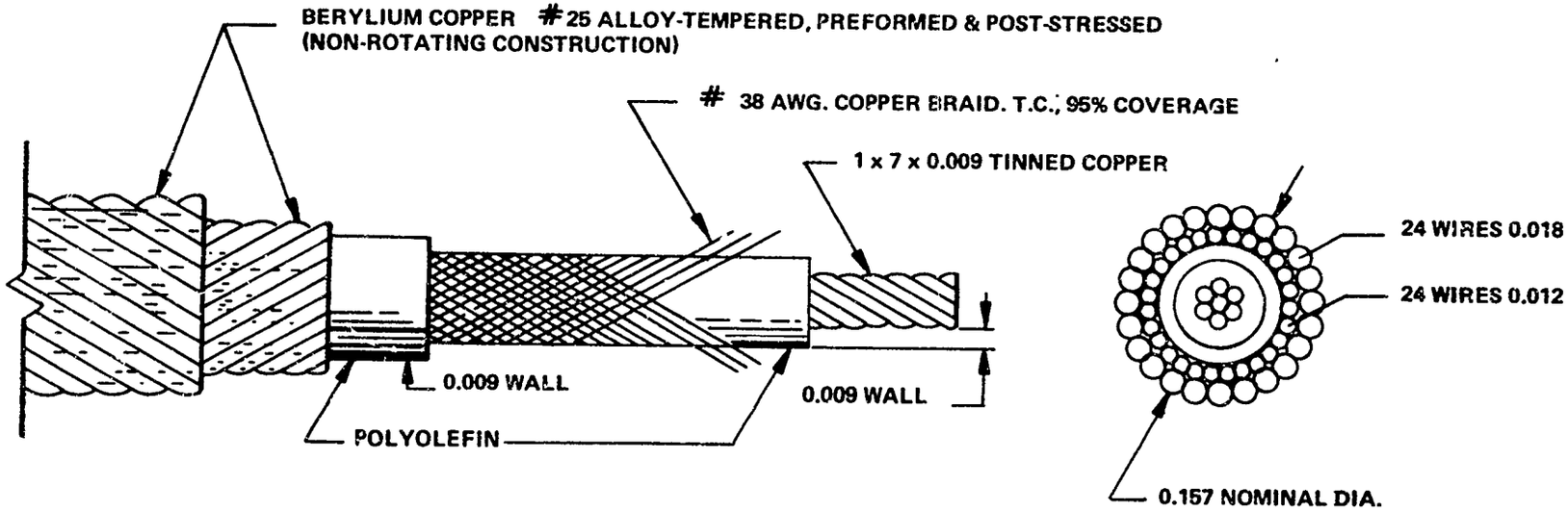

NOMINAL VALUES:
CONDUCTOR TO SHIELD CAPACITANCE: 67 PF/FT.
CONDUCTOR RESISTANCE: 16.2 OHMS/MFT.
ARMOR RESISTANCE: 4.0 OHMS/MFT.
BRAID RESISTANCE: 10.2 OHMS/MFT.

WT: 50 LBS./1000 FT.

FIGURE 2 - Tow Cable Construction, Sample No. 2

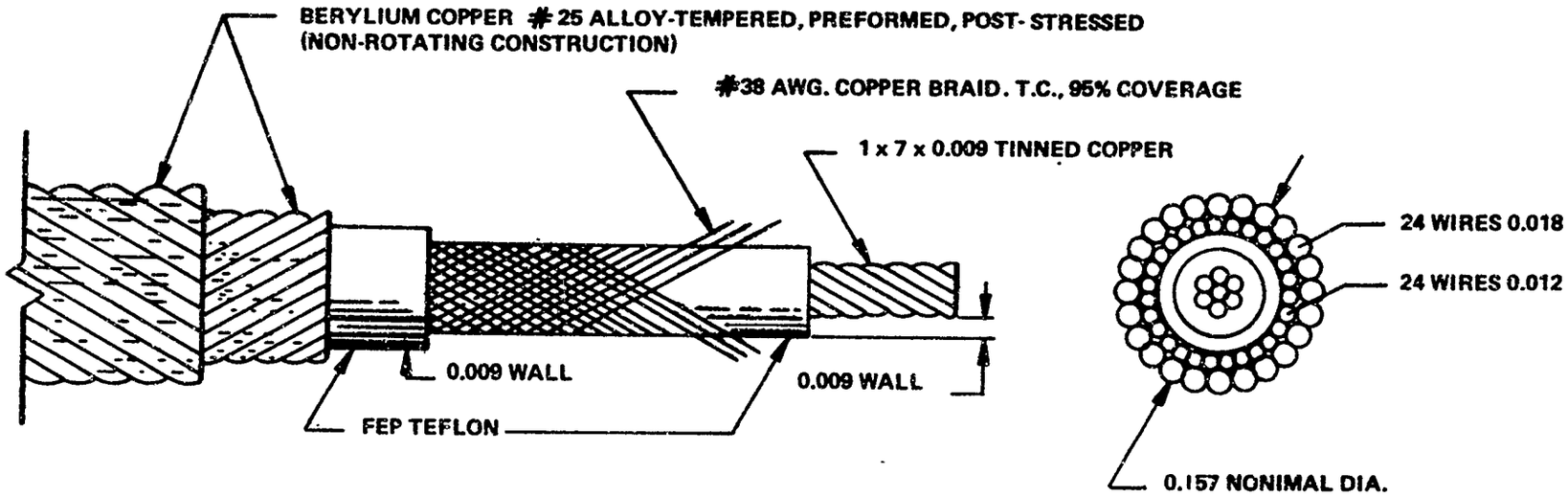

NOMINAL VALUES:
CONDUCTOR TO SHIELD CAPACITANCE: 68 PF/FT
CONDUCTOR RESISTANCE: 16.5 OHMS/MFT.
ARMOR RESISTANCE: 4.0 OHMS/MFT.
BRAID RESISTANCE: 10.5 OHMS/MFT.

WT: 50 LBS./1000 FT.

FIGURE 3 - Tow Cable Construction, Sample No. 3

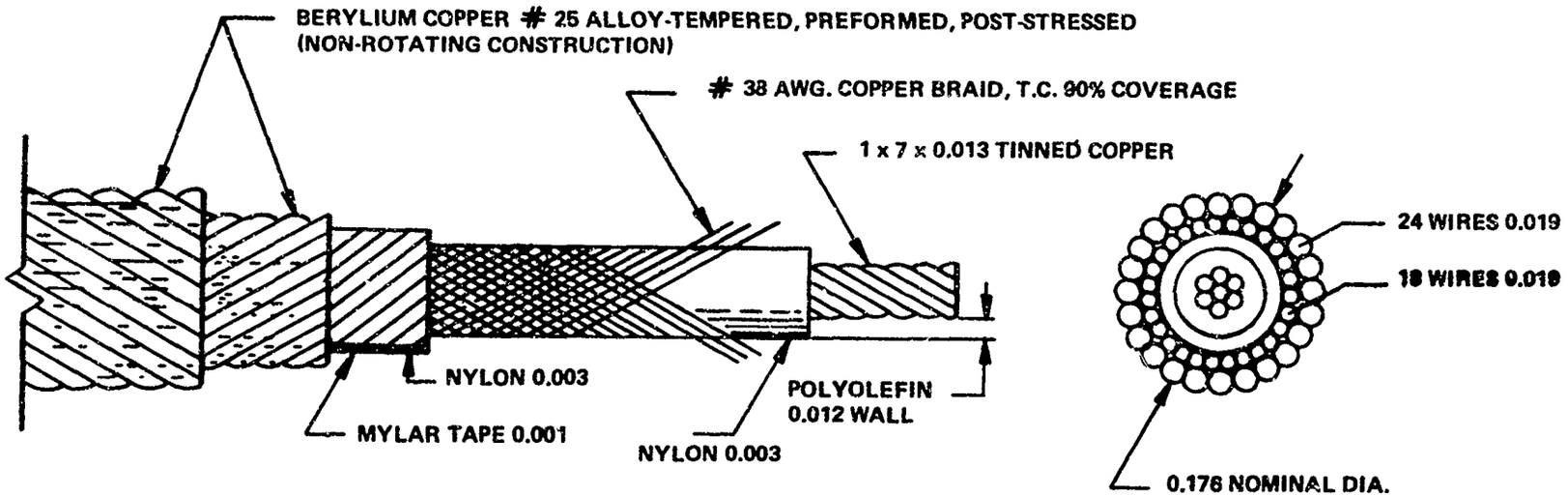

NOMINAL VALUES:
CONDUCTOR TO SHIELD CAPACITANCE: 70 PF/FT.
CONDUCTOR RESISTANCE: 9.7 OHMS/MFT.
ARMOR RESISTANCE: 3.9 OHMS/MFT.
BRAID RESISTANCE: 12.6 OHMS/MFT.

WT: 60 LBS./1000 FT.

FIGURE 4 - Tow Cable Construction, Sample No. 4

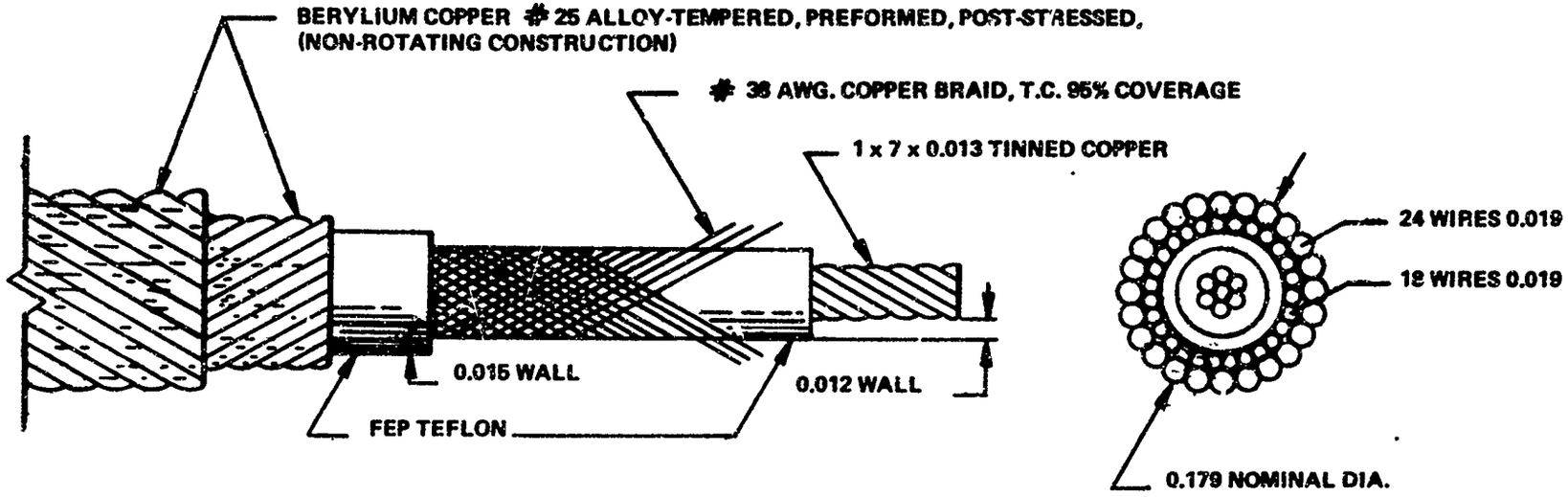

NOMINAL VALUES:
CONDUCTOR TO SHIELD CAPACITANCE: 56 PF/FT.
CONDUCTOR RESISTANCE: 9.7 OHMS/MFT.
ARMOR RESISTANCE: 3.8 OHMS/MFT.
BRAID RESISTANCE: 11.0 OHMS/1000 FT.

WT: 60 LBS./1000 FT.

FIGURE 5 - Tow Cable Construction, Sample No. 5

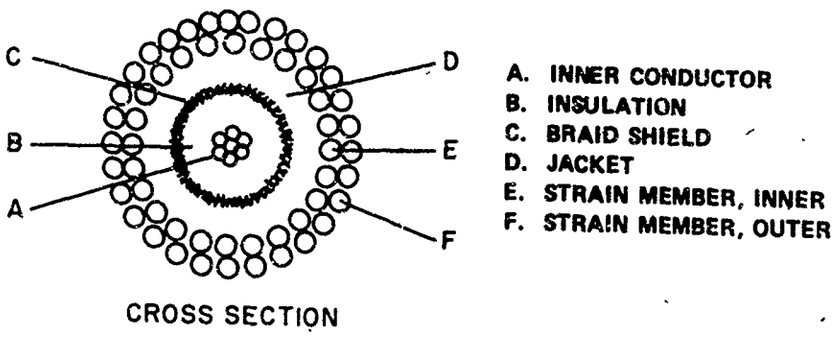

FIGURE 6 - Tow Cable Construction - Cross-Section, Nomenclature

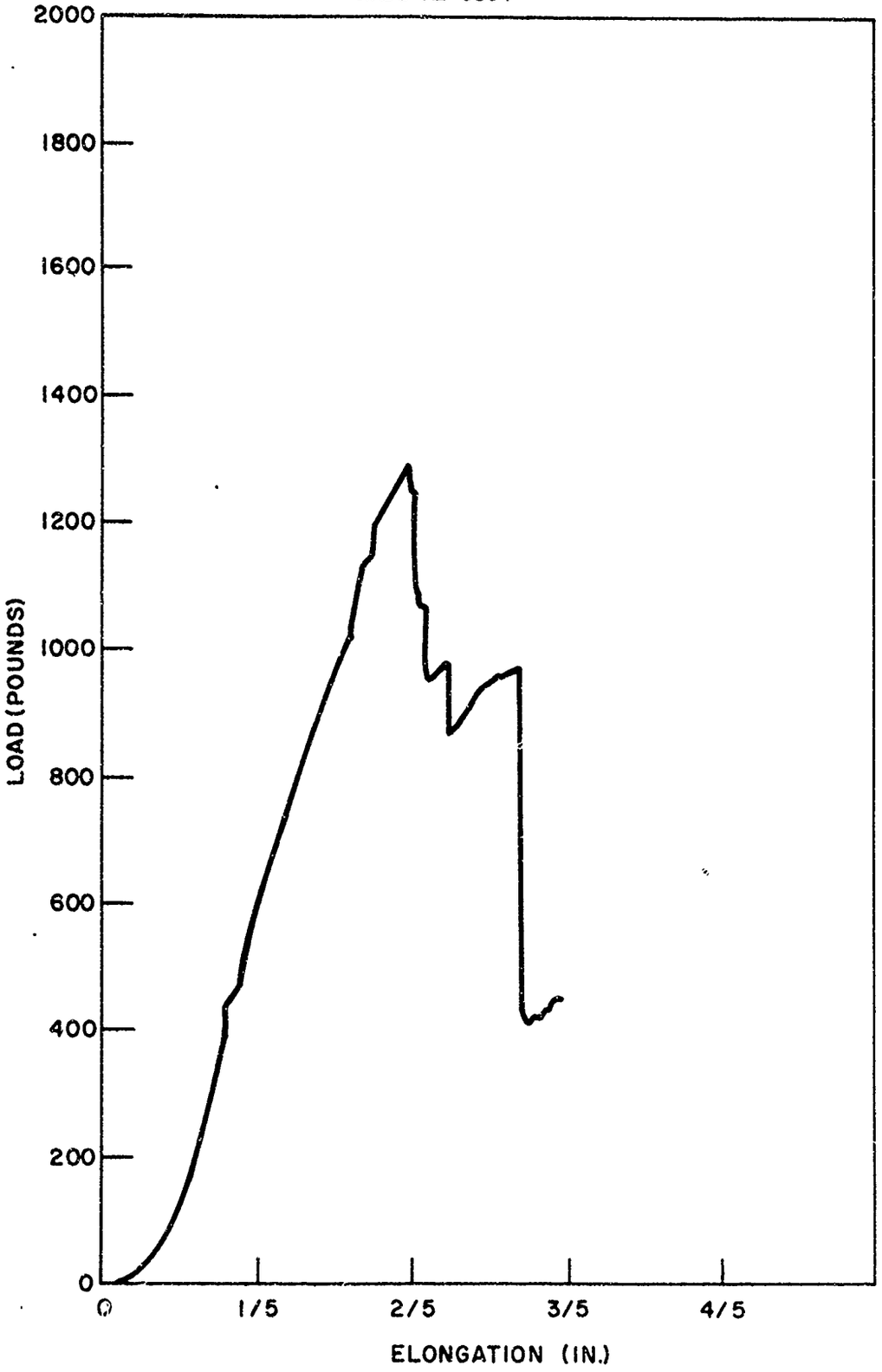

FIGURE 7 - Break Test, Sample No. 1 (Length 24 In., Breaking Strength 1300 Lb)

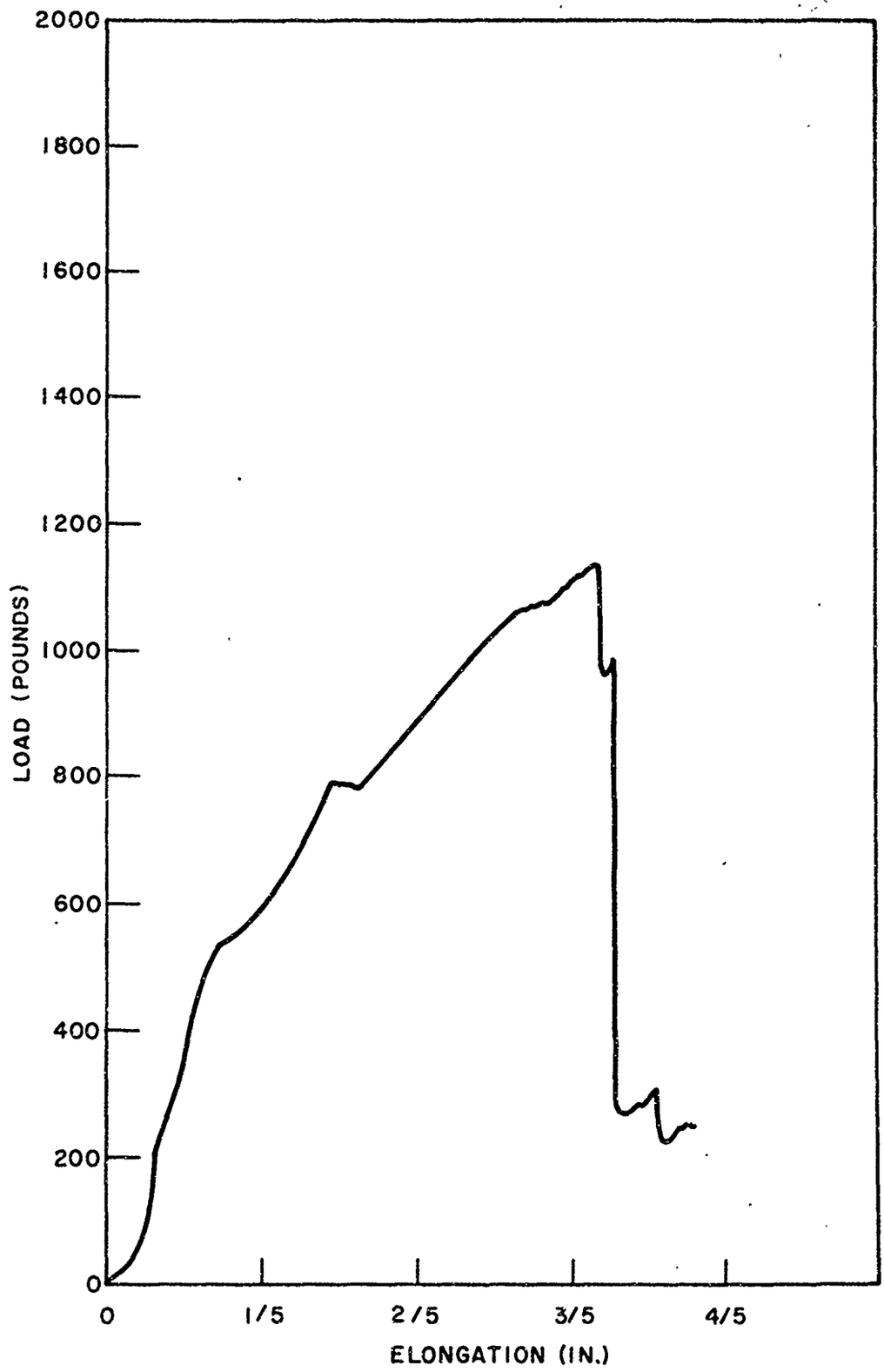

FIGURE 8 - Break Test, Sample No. 2 (Sample Length 24 In.)

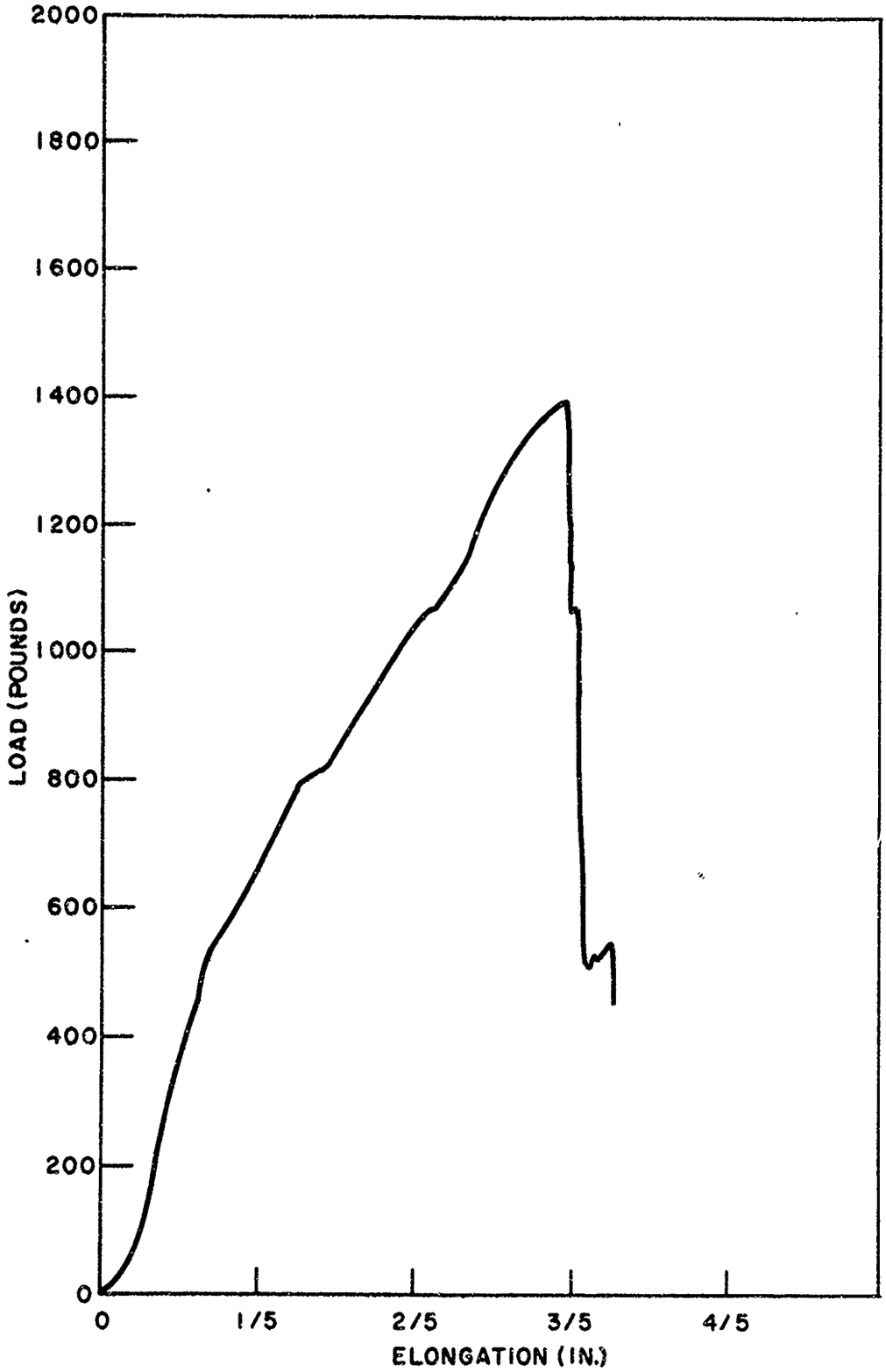

FIGURE 9 - Break Test, Sample No. 3 (Sample Length 24 In.)

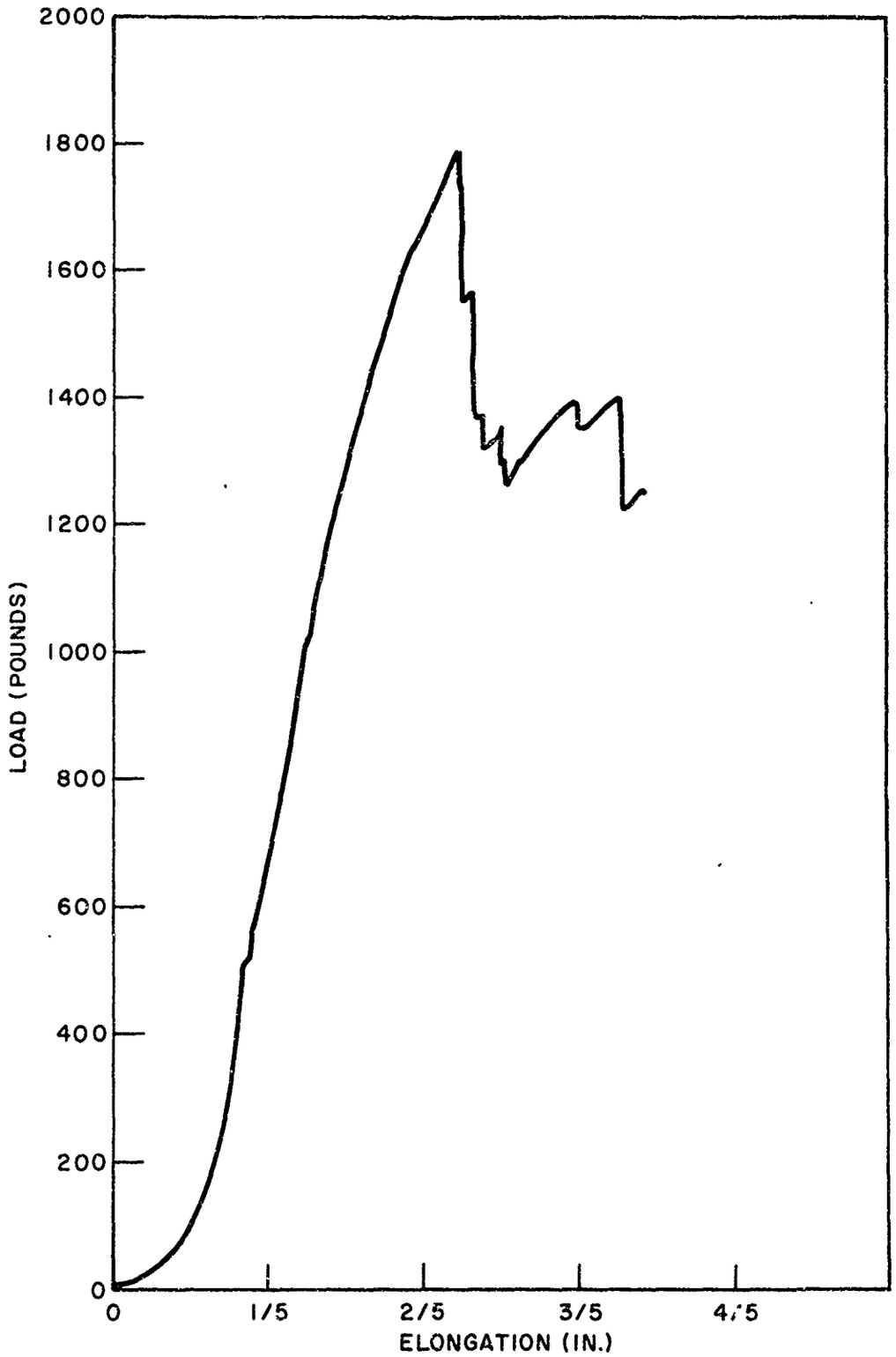

FIGURE 10 - Break Test, Sample No. 4 (Sample Length 24 In.)

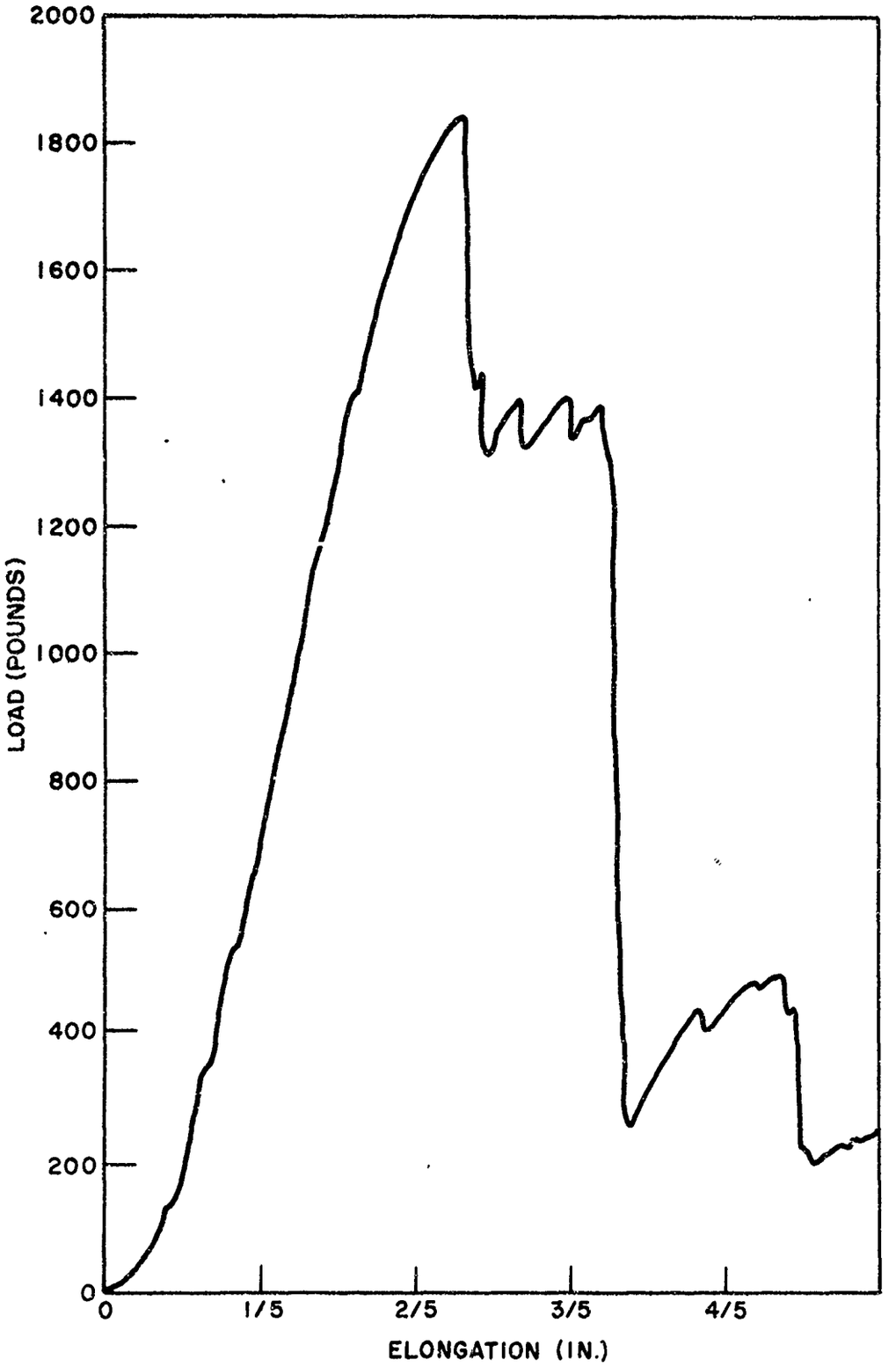

FIGURE 11 - Break Test, Sample No. 5 (Sample Length 24 In.)

UNCLASSIFIED

Security Classification

DOCUMENT CONTROL DATA - R & D

Security classification of title, body of abstract and indexing annotation must be entered when the overall report is classified)

1 ORIGINATING ACTIVITY *(Corporate author)* AERO-ELECTRONIC TECHNOLOGY DEPARTMENT NAVAL AIR DEVELOPMENT CENTER, JOHNSVILLE WARMINSTER, PENNSYLVANIA 18974	2a. REPORT SECURITY CLASSIFICATION UNCLASSIFIED 2b. GROUP

3 REPORT TITLE

DEVELOPMENT OF TOW CABLES FOR AN/ASQ-81 HELICOPTER TOWED MAD

4 DESCRIPTIVE NOTES *(Type of report and inclusive dates)*

PHASE REPORT

5 AUTHOR(S) *(First name, middle initial, last name)*

I. R. DiLORENZO

6 REPORT DATE	7a. TOTAL NO OF PAGES	7b. NO. OF REFS
14 JULY 1969	19	2 (FOOTNOTES)

8a CONTRACT OR GRANT NO b. PROJECT NO AIRTASK NO. A37533029/2021/F101-06-01 WORK UNIT NO. 5 d.	9a. ORIGINATOR'S REPORT NUMBER(S) NADC-AE-6864 9b. OTHER REPORT NO(S) *(Any other numbers that may be assigned this report)*

10 DISTRIBUTION STATEMENT

THIS DOCUMENT IS SUBJECT TO SPECIAL EXPORT CONTROLS AND EACH TRANSMITTAL TO FOREIGN GOVERNMENTS OR FOREIGN NATIONALS MAY BE MADE ONLY WITH PRIOR APPROVAL OF COMNAV-AIRDEVCEN OR COMNAVAIRSYSCOM (AIR-6022).

11 SUPPLEMENTARY NOTES	12 SPONSORING MILITARY ACTIVITY
	NAVAL AIR SYSTEMS COMMAND DEPARTMENT OF THE NAVY

13 ABSTRACT

Five non-magnetic tow cable samples were evaluated for electrical and physical characteristics. The best tow cable had preformed and post-stressed armor made of silver plated beryllium copper and made use of teflon insulation for the electrical conductors.

DD FORM 1 NOV 65 1473 (PAGE 1)

S/N 0101-807-6801

UNCLASSIFIED

Security Classification

UNCLASSIFIED
Security Classification

14 KEY WORDS	LINK A ROLE	LINK A WT	LINK B ROLE	LINK B WT	LINK C ROLE	LINK C W
NON-MAGNETIC						
TOW CABLE, SIGNAL CONDUCTOR						
HELICOPTER TOWED MAD						
BERYLLIUM COPPER ARMOR						

DD FORM 1 NOV 65 1473 (BACK)
(PAGE 2)

UNCLASSIFIED
Security Classification