UNCLASSIFIED

AD NUMBER

AD854569

NEW LIMITATION CHANGE

TO

Approved for public release, distribution unlimited

FROM

Distribution authorized to U.S. Gov't. agencies and their contractors; Administrative/Operational Use; JUN 1969. Other requests shall be referred to Naval Ship Research and Development Lab., Panama City, FL.

AUTHORITY

NCSL ltr, 5 Dec 1974

THIS PAGE IS UNCLASSIFIED

AD854569

NAVAL SHIP RESEARCH AND DEVELOPMENT CENTER
Washington, D.C. 20007

LOGARITHMIC SONAR RECEIVER AND THREE-COLOR DISPLAY

by

Bobby R. Ludlum

This document is subject to special export controls and each transmittal to foreign governments or foreign nationals may be made only with prior approval of the Naval Ship Research and Development Laboratory, Panama City, Florida 32401.

D D C
RECEIVED
JUL 7 1969
B

NAVAL SHIP RESEARCH AND DEVELOPMENT LABORATORY
PANAMA CITY, FLORIDA

RESEARCH AND DEVELOPMENT

JUNE 1969

INTERIM REPORT 2910
COPY NO. 39

Limited number of copies containing color other than black and white are available until [illegible] will be [illegible]

COLOR ILLUSTRATIONS REPRODUCED IN BLACK AND WHITE

29

NAVAL SHIP RESEARCH AND
DEVELOPMENT LABORATORY
PANAMA CITY, FLORIDA

LOGARITHMIC SONAR RECEIVER AND THREE-COLOR DISPLAY

by

Bobby R. Ludlum

This document is subject to special export controls and each transmittal to foreign governments or foreign nationals may be made only with prior approval of the Naval Ship Research and Development Laboratory, Panama City, Florida 32401.

RESEARCH AND DEVELOPMENT

JUNE 1969

INTERIM REPORT 2910

COPY NO.

NAVAL SHIP RESEARCH AND DEVELOPMENT LABORATORY
PANAMA CITY, FLORIDA 32401
formerly U. S. Navy Mine Defense Laboratory

IN REPLY REFER TO:
Code P722

From: Commanding Officer
To: Distribution List

Subj: NAVSHIPRANDLAB Unclassified Report 2910 of June 1969; information concerning

1. The subject report describes a useful technique for obtaining a wide dynamic range display by means of a color cathode tube.

2. The report is forwarded to all addressees for information.

J. D. W. BOROP

BLANK PAGE

TABLE OF CONTENTS

	Page No.
INTRODUCTION	1
LOGARITHMIC SONAR RECEIVER	3
THREE-COLOR DISPLAY	5
EXPERIMENTAL TESTS	8
RECOMMENDED CIRCUIT IMPROVEMENTS	23
CONCLUSIONS	24

LIST OF ILLUSTRATIONS

Figure No.		Page No.
1	Logarithmic Receiver and Three-Color Display	2
2	Logarithmic Sonar Receiver	4
3	Voltage Transfer Characteristics	6
4	Three-Color Display and Video Processor	7
5	Experimental Sonar Electronics	10
6	Experimental Sonar Target Geometry	11
7	Experimental Sonar Test Results	13
8	Block Diagram of Color, and Black and White Receiver Comparison	16
9	Test Signal and Synchronization Signal	17
10	Three-Color Display Test Results	19
11	Black and White Display Test Results (Gain Decreased)	21
12	Black and White Display Test Results (Gain Increased)	22

INTRODUCTION

An important parameter in sonar systems is dynamic range. This is a measure of the ratio of the maximum and minimum signal levels that can be received and displayed without receiver or display saturation. Generally, the part of the system with the most limited dynamic range is the display. One type of display widely used is the cathode ray tube on which the position of a brightened area on the tube face indicates the relative position of the target, and the brightness of the area indicates the relative amplitude of the target echo signal. The dynamic range of brightness levels that the tube can produce is a function of the screen phosphor and the construction of the tube. The maximum brightness level is limited by the phosphor while the minimum brightness level is limited by the reflections within the tube and the ambient light level. Generally, the dynamic range is poorer for tubes with long persistence phosphors. The dynamic range may be defined quantitatively as

$$DR = 20 \log_{10} \frac{V_B(max)}{V_B(min)} \text{ (db)}$$

where

$V_B(max)$ is the intensity modulating voltage that produces the maximum brightness level without saturation, and $V_B(min)$ is the voltage that produces the minimum brightness level subject to the given ambient light level.

The dynamic ranges of three cathode ray tube displays were measured and found to be between 8 db and 28 db.

The dynamic ranges mentioned above indicate the degree of limitation imposed by the use of these displays. If the system gain is adjusted so that the strongest signal received just fails to saturate the display, then the weakest signal displayed may be only as much as 28 db or as little as 8 db below the strongest signal. If the system gain is increased to allow the weaker signals to be displayed, then the stronger signals will saturate the display resulting in a loss of definition.

This report describes one method of devising a receiver-display system with a dynamic range of greater than 60 db (Figure 1).

(Text Continued on Page 3)

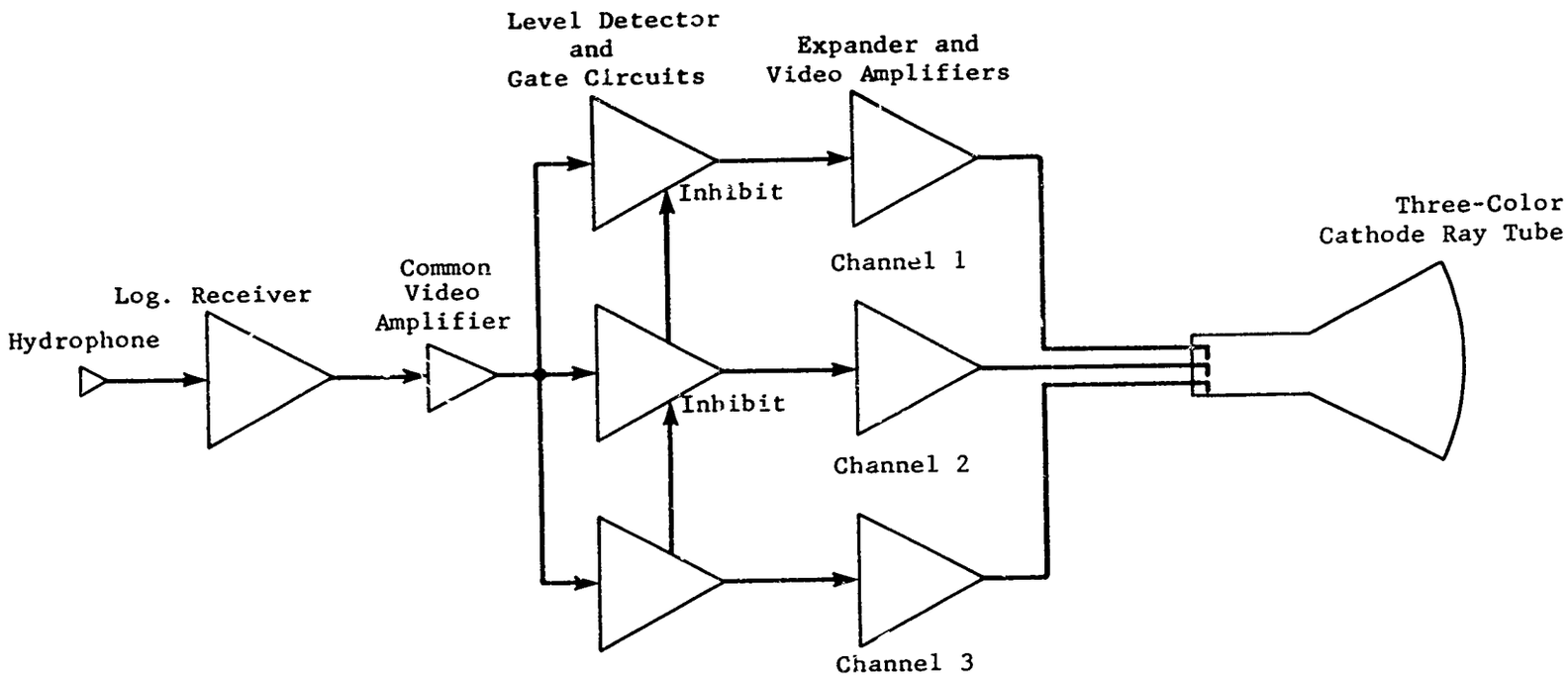

FIGURE 1. LOGARITHMIC RECEIVER AND THREE-COLOR DISPLAY

The system uses a receiver whose transfer characteristic is a logarithmic function that allows it to accept a wide range of input signal levels without saturating. The logarithmically compressed receiver output signal is divided into three video voltage ranges corresponding to three 23.3 db ranges of receiver input voltage covering the range of -80 to -10 db (ref 1 volt rms). The three video voltage ranges are expanded in three video channels so that the receiver-expander transfer characteristic for each channel is linear over the given 23.3 db range of receiver input signals. The expanded video signals from the three channels are amplified and used to intensity modulate the three colors (red, blue, and green) of a color cathode ray tube. The 70-db range of receiver input signals is displayed by the three colors, each color displaying one third of the total range.

LOGARITHMIC SONAR RECEIVER

The logarithmic receiver consists of five stages: the preamplifier, logarithmic amplifier, bandpass filter, post-filter amplifier, and envelope detector (Figure 2). In the preamplifier, transistor Q_1 is a low-noise common emitter amplifier. The input circuit is transformer coupled. Transistor Q_2 is an emitter follower that prevents loading of the collector circuit of Q_1. The logarithmic amplifier derives its response from the nonlinear volt ampere (VI) characteristic of a silicon planar diode. The diode current as a function of the diode voltage is taken from the Amplifier Handbook[1].

$$I = I_o \exp (q/mKT) V,$$

where

m = a factor generally between 1.0 and 2.0 representing the effects of diffusion current flow and carrier generation recombination

T = Temperature

q = electron charge

K = Boltzman's constant

I_o = Diode reverse saturation current

---

(1) Shea, Richard F., *Amplifier Handbook*, McGraw-Hill, 1966.

(Text Continued on Page 5)

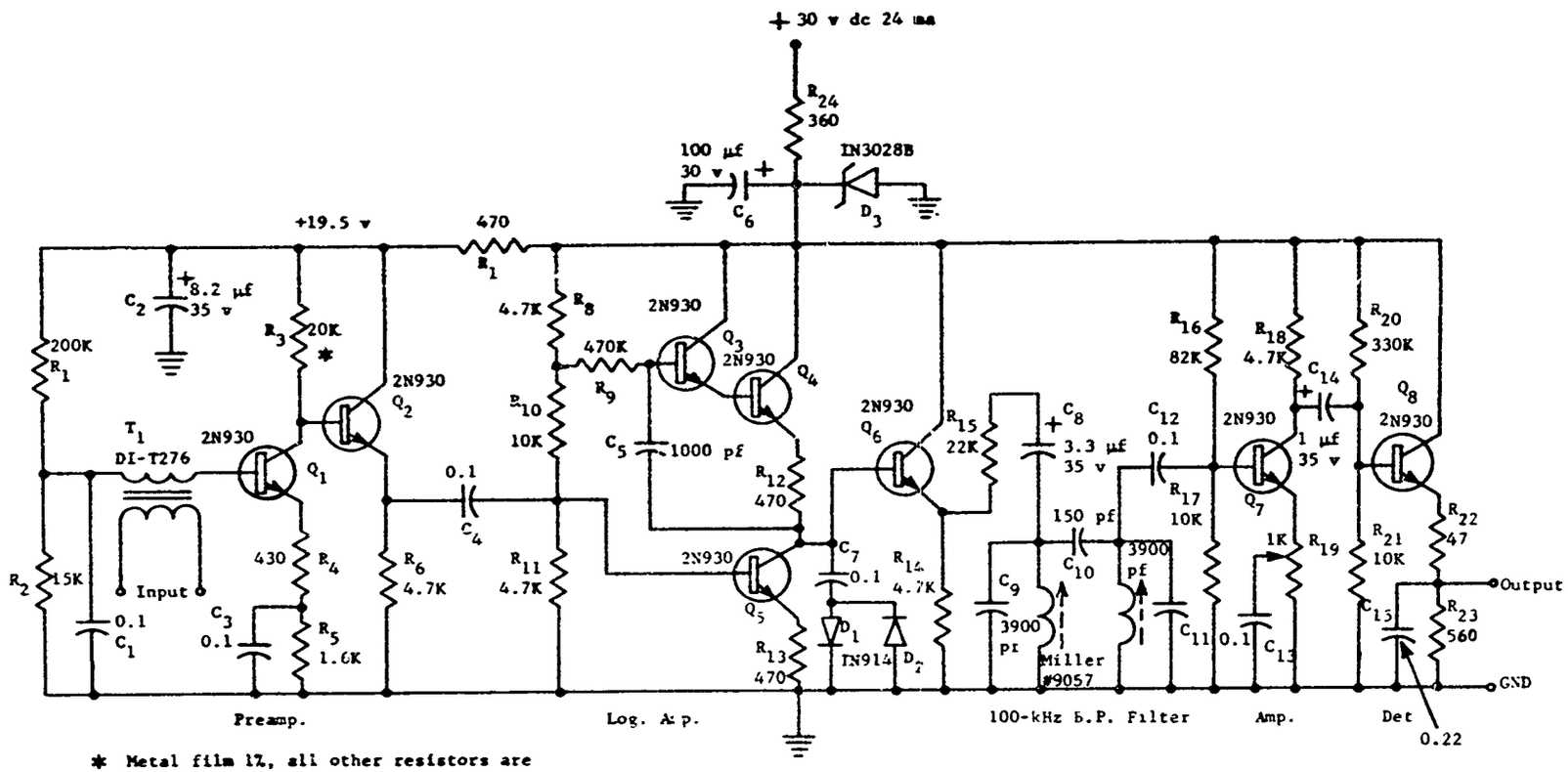

* Metal film 1%, all other resistors are 1/4 watt carbon 5%.

All resistor values are ohms; all capacitor µf unless noted otherwise.

FIGURE 2. LOGARITHMIC SONAR RECEIVER

where K = a constant. The diode voltage then is a logarithmic function of the diode current. This relationship holds over several decades of current for some types of silicon diodes. Transistors Q_3, Q_4, and Q_5 form a boot-strapped, high output impedance current driver for the type 1N914 silicon diodes. Transistor Q_6 is an emitter follower to prevent loading of the diode current driver. The bandpass filter consists of two capacitively coupled parallel resonant sections. The filter is tuned to 100 kHz, and has a 6-db bandpass of about 10 kHz. The post-filter amplifier is a straightforward common emitter gain stage. Transistor Q_8, in a common collector configuration and biased slightly on, operates as the envelope detector. The voltage transfer characteristic of the logarithmic receiver for pulsed signals is shown in Figure 3.

In actual use the system is adjusted so that the largest signal seen by the receiver is about -10 db (ref 1 volt rms). Figure 3 shows that this maximum input produces a video signal of 3 volts at the receiver output. An input signal of -80 db produces a video output of approximately 0.5 volt. Thus, the 70-db range of input signal levels is compressed into a video level range of about 16 db. This compression would cause severe distortion of the hydrophone directivity pattern if the receiver were to be used as such. However, expansion amplifiers are used in the three-color display described below so that the overall transfer characteristic of the receiver and display will be linear.

THREE-COLOR DISPLAY

The video circuitry of the three-color display has three main functions. First, the common video amplifier output voltage is divided into three ranges corresponding to three consecutive 23.3 db ranges of logarithmic receiver input voltage (Figure 3). Next, each of the ranges is expanded in a separate channel so that the overall transfer characteristic of each channel and the logarithmic receiver (over the corresponding 23.3 db range of input signals) is linear. Then, the expanded vidio signals are amplified sufficiently to enable them to intensity modulate the three colors of the three-gun cathode ray tube. A block diagram of the video system is shown in Figure 4. The division of the video signals into three amplitude ranges is accomplished by circuit blocks 1 through 4 in each channel. Integrated circuit differential comparators operate as level detectors and control turning on diode analog gates in the video signal path. When the video input voltage rises above the comparator reference voltage in a given channel, the diode gate is turned on allowing video signals to pass to the expander amplifier (block 5) in the given channel. The channels are interconnected so that channel 2 inhibits channel 1, and channel 3

(Text Continued on Page 8)

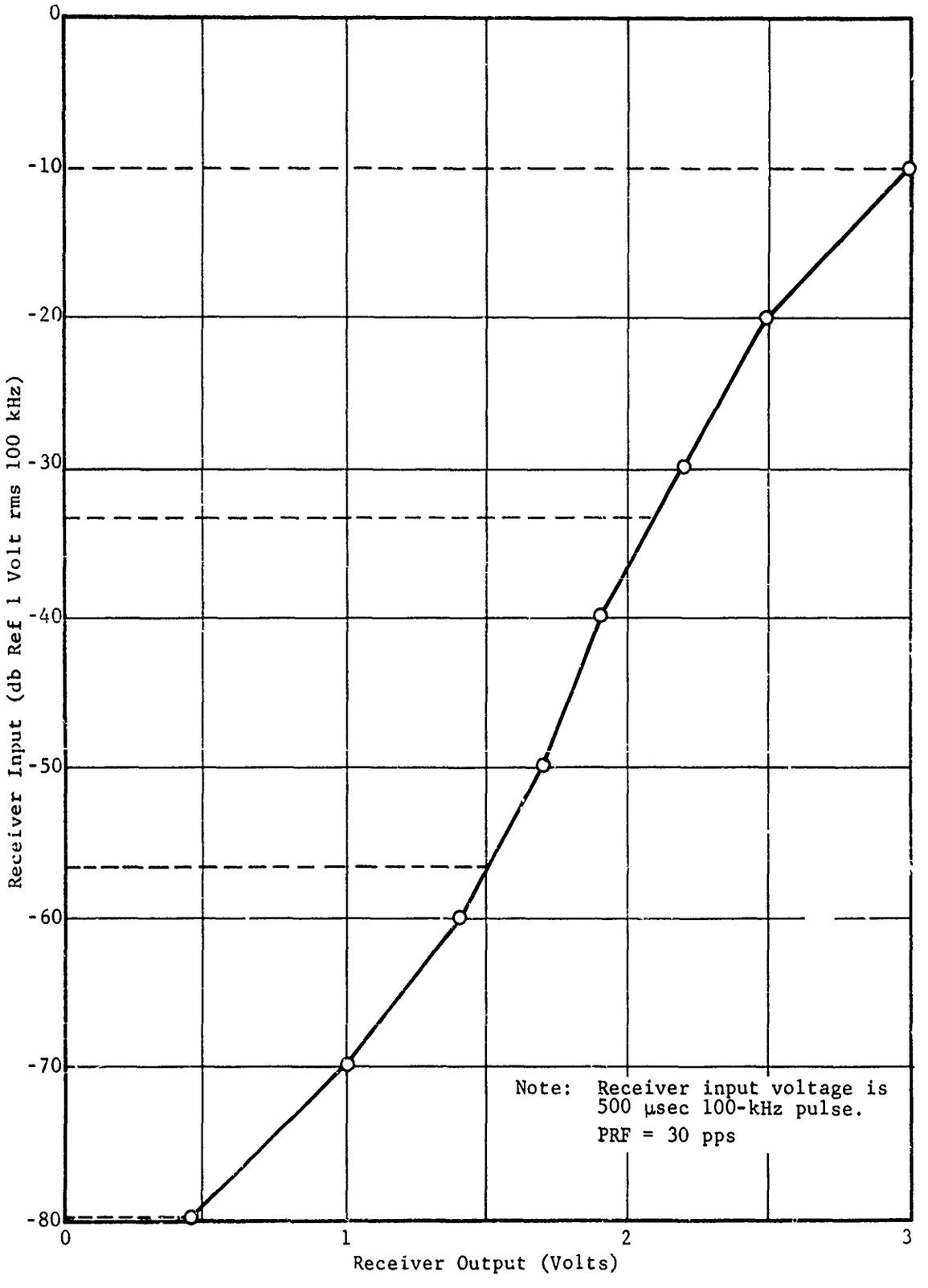

FIGURE 3. VOLTAGE TRANSFER CHARACTERISTICS

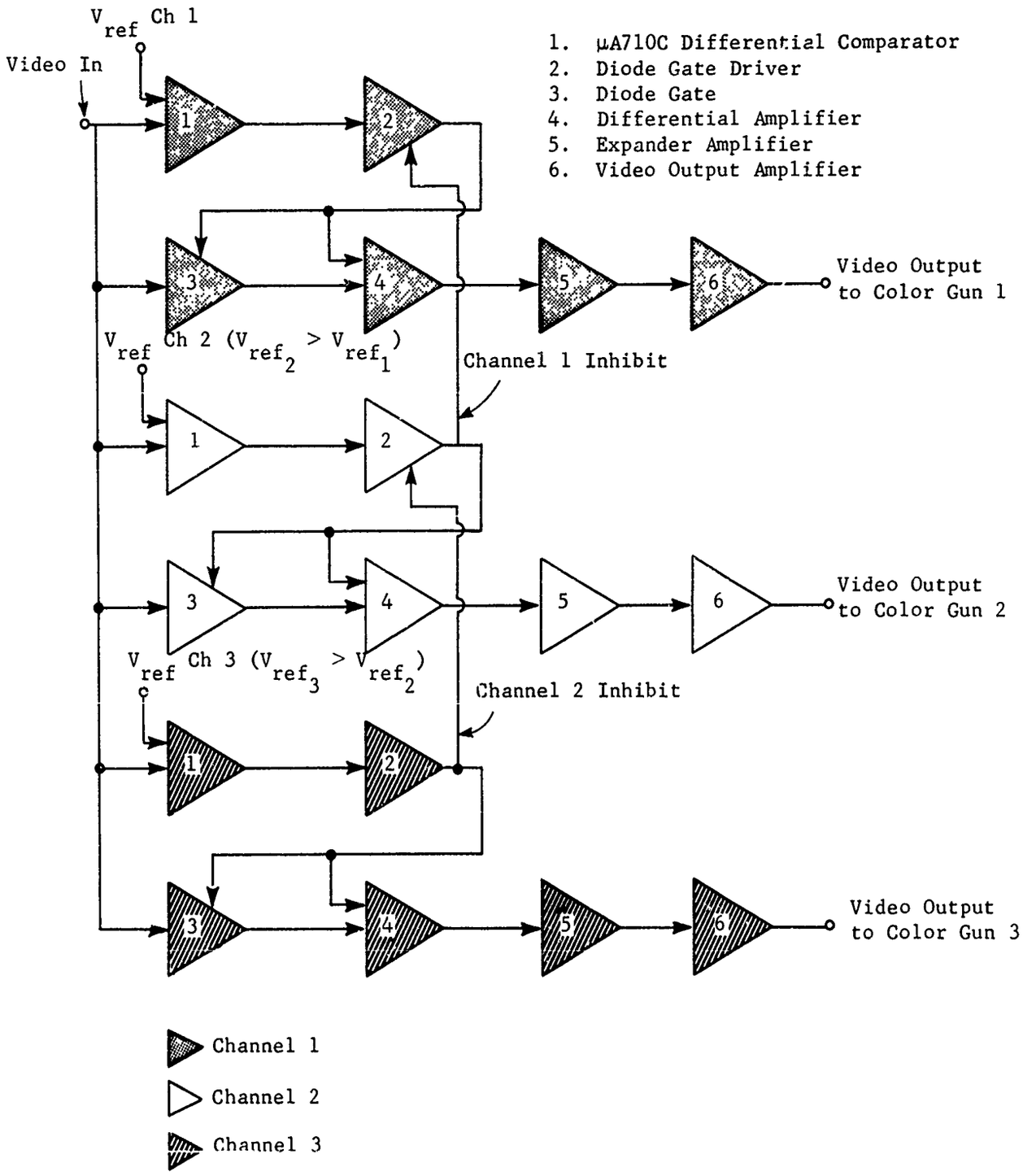

FIGURE 4. THREE-COLOR DISPLAY VIDEO PROCESSOR

inhibits channel 2; or stated differently, when channel 2 turns on, channel 1 turns off; and when channel 3 turns on, channels 1 and 2 turn off.

The video signals are expanded in circuit block 5 in each channel. The expander circuits are common emitter transistor amplifiers with resistor diode networks in the emitter circuits to give a nonlinear gain characteristic. The voltage gain varies with input signal level, and the nonlinear gain characteristic is a piecewise approximation of the characteristic required to linearize the overall receiver-display transfer characteristic.

The video output amplifiers (circuit block 6) are common emitter shunt-peaked transistor amplifiers, used to amplify the expanded video signals to a level sufficient to modulate the three-gun cathode ray tube cathode voltages. All video circuitry from the output of the log receiver detector to the cathode ray tube cathodes is direct coupled. Therefore, no dc restoration is required. The magnetic deflection cathode ray tube cathodes operate at approximately 30 volts positive with respect to ground, so there is no problem in using a transistorized video output stage and direct coupling.

EXPERIMENTAL TESTS

Table 1 shows the dynamic range measurements made on three cathode ray tube displays.

TABLE 1

DISPLAY DYNAMIC RANGES

Display	Dynamic Range (db)
Ampex Television Monitor (12-inch monochromatic)	20 to 28 (varies with ambient light)
ITT Color Oscilloscope (19-inch 3 gun tube)	20 to 28 (approximately same for each gun)
HP Variable Persistence Oscilloscope (5-inch monochromatic)	15 to 18 (normal mode) 8 to 10 (variable persistence mode--minimum setting)

Two experimental tests were conducted to compare the logarithmic receiver three-color display with a linear receiver single-color display. The tests and results are described below.

The first test consisted of using the logarithmic receiver three-color display and a linear receiver single-color display in a simple pulsed sonar. The equipment used in this test is shown in Figure 5. The timing circuit and synchronization pulse generator consisted of a 15.75 kHz clock pulse generator, and a digital counter which divided the clock frequency by 525. The 15.75 kHz output signal provided horizontal synchronization of the displays. The output of the divide-by-525 counter was a 30 Hz signal which provided vertical synchronization. The transmitter for the sonar consisted of a monostable multivibrator (triggered by the vertical synchronized pulse), a 100 kHz oscillator gated on by the multivibrator output pulse, and a 10 watt power amplifier.

The logarithmic receiver and three-color display have been described previously. The color guns were connected so that low level signals appeared in blue, medium level signals appeared in green, and high level signals appeared in red. The linear receiver consisted of a modified logarithimic receiver card. Only the preamplifier, bandpass filter, and envelope detector sections were used. A linear amplifier replaced the logarithmic amplifier section for linear response. The single-color display was a Hewlett-Packard Variable Persistence Oscilloscope used in the normal persistence mode. The sonar was set up and various targets were displayed as shown in Figure 6.

Test results are shown in photographs 1 through 5 in Figure 7. Photograph 1 shows the preamplifier output of the linear receiver. Signal A was the transmitted pulse. Target C was a triplane directly in front of a wooden piling. Photographh 2 shows the same targets, but with the scope gain increased by a factor of 50 to show the weaker echo signals. Target B was a metal pipe coupling suspended by a string. Target D was the piling behind the triplane, and Target E was a wooden piling at approximately twice the range of the first piling (D). Photograph 3 shows the same targets as they appeared on the three-color display. The targets appear as horizontal lines. The brightness and color of the lines are a function of echo level; and distance from line A, a result of the transmitted pulse, is a function of range. Several colors are shown in the photograph but were not present on the display. The slow speed of the color film required a slow shutter speed. Therefore, the shutter was open during several frames on the display. Frame to frame variations in brightness and color were integrated by the film. The colors as they appeared on the display were pure red, blue, or green. Photograph 4 shows the single-color display with the linear receiver gain decreased to the point where the signal from Target C just failed to saturate the display. Target B was barely perceptible (but is not visible in the color reproduction in Figure 7), and Targets D and E

(Text Continued on Page 15)

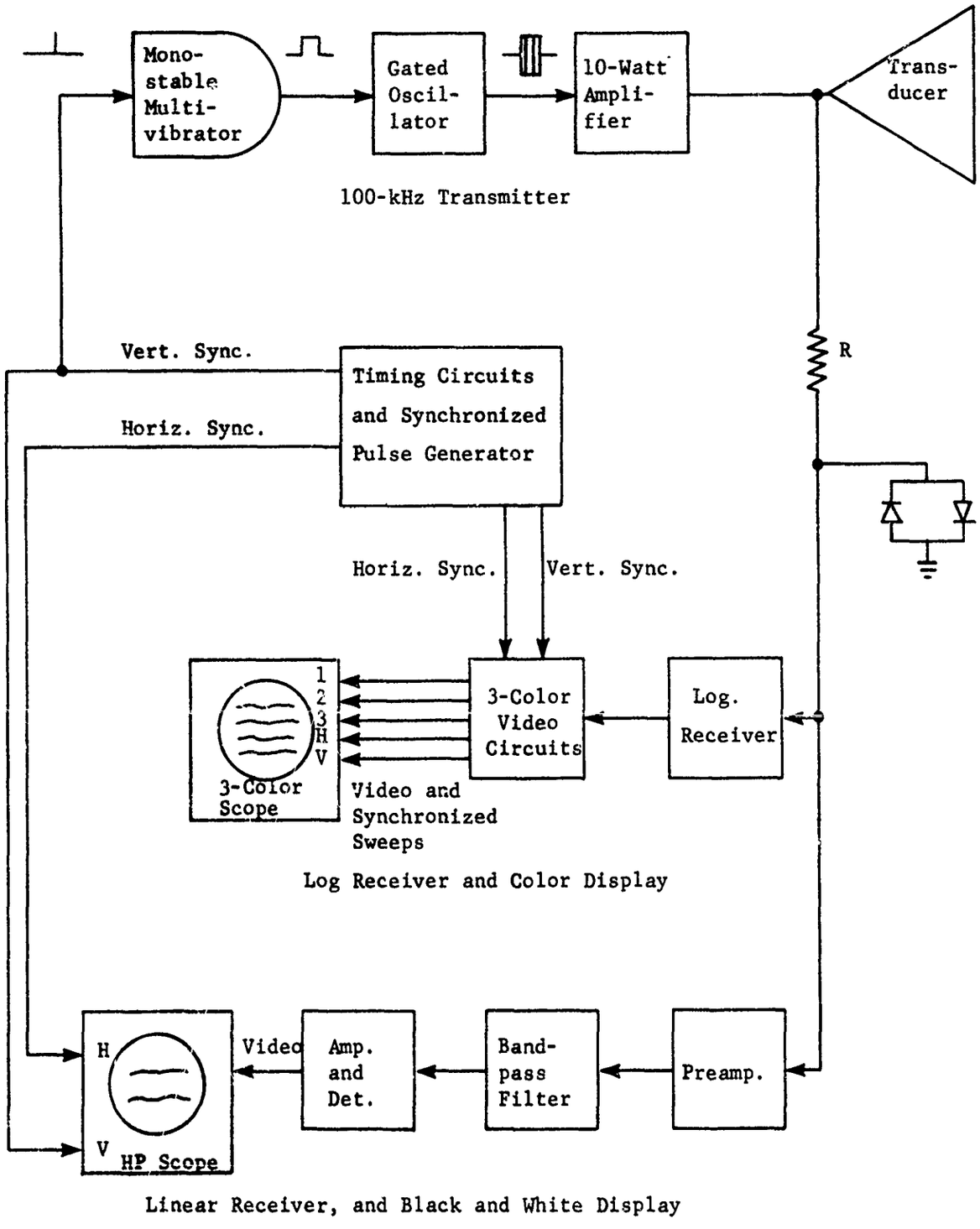

FIGURE 5. EXPERIMENTAL SONAR ELECTRONICS

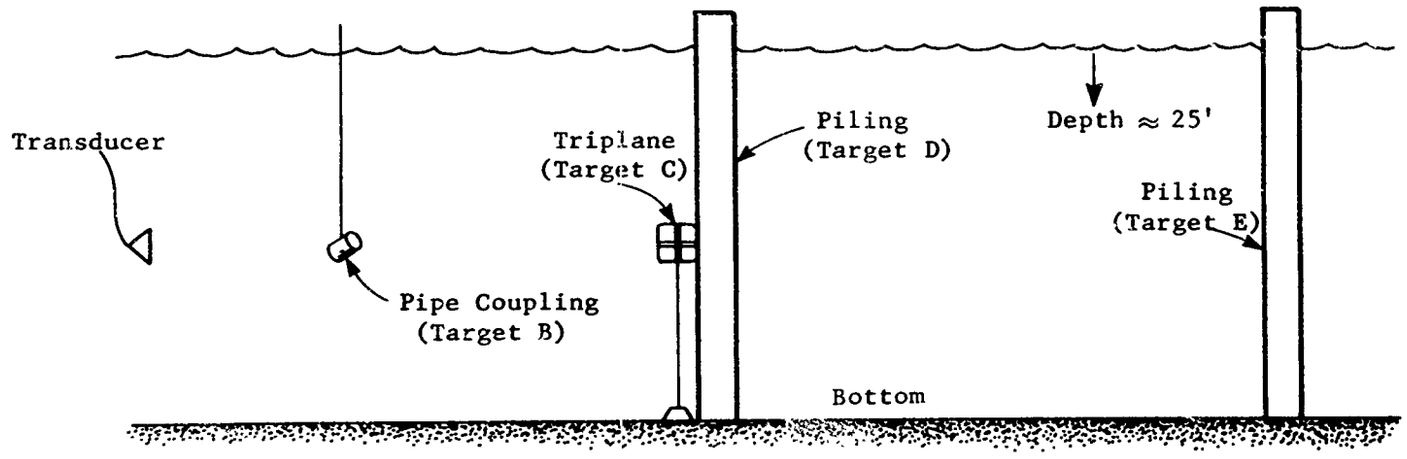

FIGURE 6. EXPERIMENTAL SONAR TARGET GEOMETRY

(Reverse Page 12 Blank)

A - SCOPE
VERTICAL SCALE 0.5 VOLTS PER DIVISION

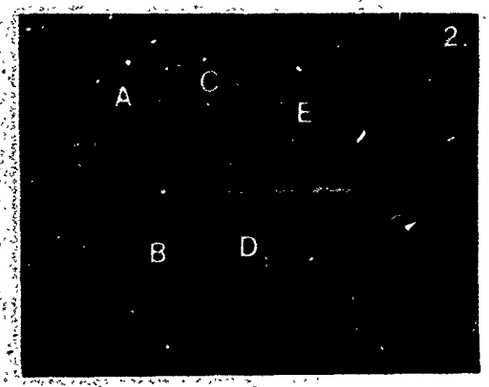

A - SCOPE
VERTICAL SCALE 0.01 VOLTS PER DIVISION

LOGARITHMIC-RECEIVER-COLOR DISPLAY

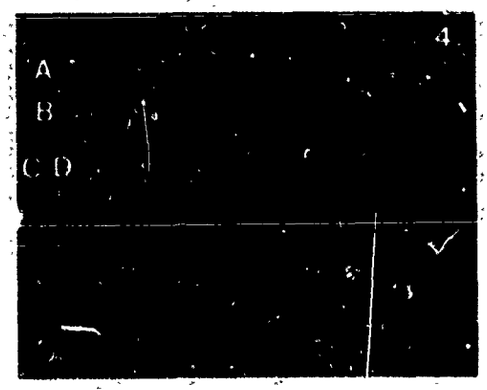

LINEAR RECEIVER 1-COLOR DISPLAY

LINEAR RECEIVER 1-COLOR DISPLAY

FIGURE 7. EXPERIMENTAL SONAR TEST RESULTS

(Reverse Page 14 Blank)

COLOR ILLUSTRATIONS REPRODUCED
IN BLACK AND WHITE

were not visible. When the receiver gain was increased to show targets D and E, as shown in Photograph 5, the display completely saturated and bloomed on Targets A and C. Target D brightness was so low that it is not reproduced in the figure. Thus, while either gain setting of the linear receiver single-color display involved a sacrifice of either weak signal detection or linear operation on strong signals, the logarithmic receiver three-color display showed all targets simultaneously without saturation.

The second experimental test consisted of feeding a calibrated test signal to both receiver display systems. A block diagram of the test setup is shown in Figure 8. The timing circuits and staircase generator consisted of digital circuits and metal oxide semiconductor-field effect transistor (MOS-FET) gates. The output was a staircase wave with the amplitude of each step individually adjustable, and a synchronized pulse signal with a repetition rate of 30 pulses per second. The staircase wave was used to control the attenuation of a FET voltage variable attenuator. The attenuator amplitude modulated a 100 kHz CW signal with the staircase wave. The test signal was therefore a 100 kHz CW signal with amplitudes as shown in Figure 9. The highest level step had an amplitude of -15 (ref 1 volt rms), and the lowest step had an amplitude of -75 db. (The highest level step was therefore 60 db above the lowest level step). Intermediate steps were at 5 db intervals. The receiver display systems were the same as those used in the first test with the exception of the single-color display. The Hewlett-Packard Oscilloscope was replaced by an Ampex black and white television monitor. A composite video generator was added to the system to mix the vertical synchronization and video signals for the television monitor.

The results of the tests are shown in Figures 10 through 12. Figure 10 shows the three-color display. The logarithmic receiver gain had to be decreased to prevent display saturation on the highest level step. This was due to the red channel expander amplifier's gain rising too rapidly with input signal level. This was evident from the fact that the lowest level red step is barely visible, while the two highest level red steps are barely distinguishable. Decreasing the logarithmic receiver gain did not allow the lowest level blue step to illuminate the cathode ray tube (CRT) screen. Correcting the gain response curve of the red channel expander amplifier would allow the receiver gain to be increased. This would allow the lowest level blue step to be seen, and the brightness of the red steps would increase in equal increments. Operating with the receiver gain decreased, the three-color display still showed 12 levels between -15 db (ref 1 volt rms) and -70 db, a total dynamic range of 55 db.

Figure 11 shows the black and white TV display. The linear receiver gain was decreased to the point where the two highest level steps saturated

(Text Continued on Page 23)

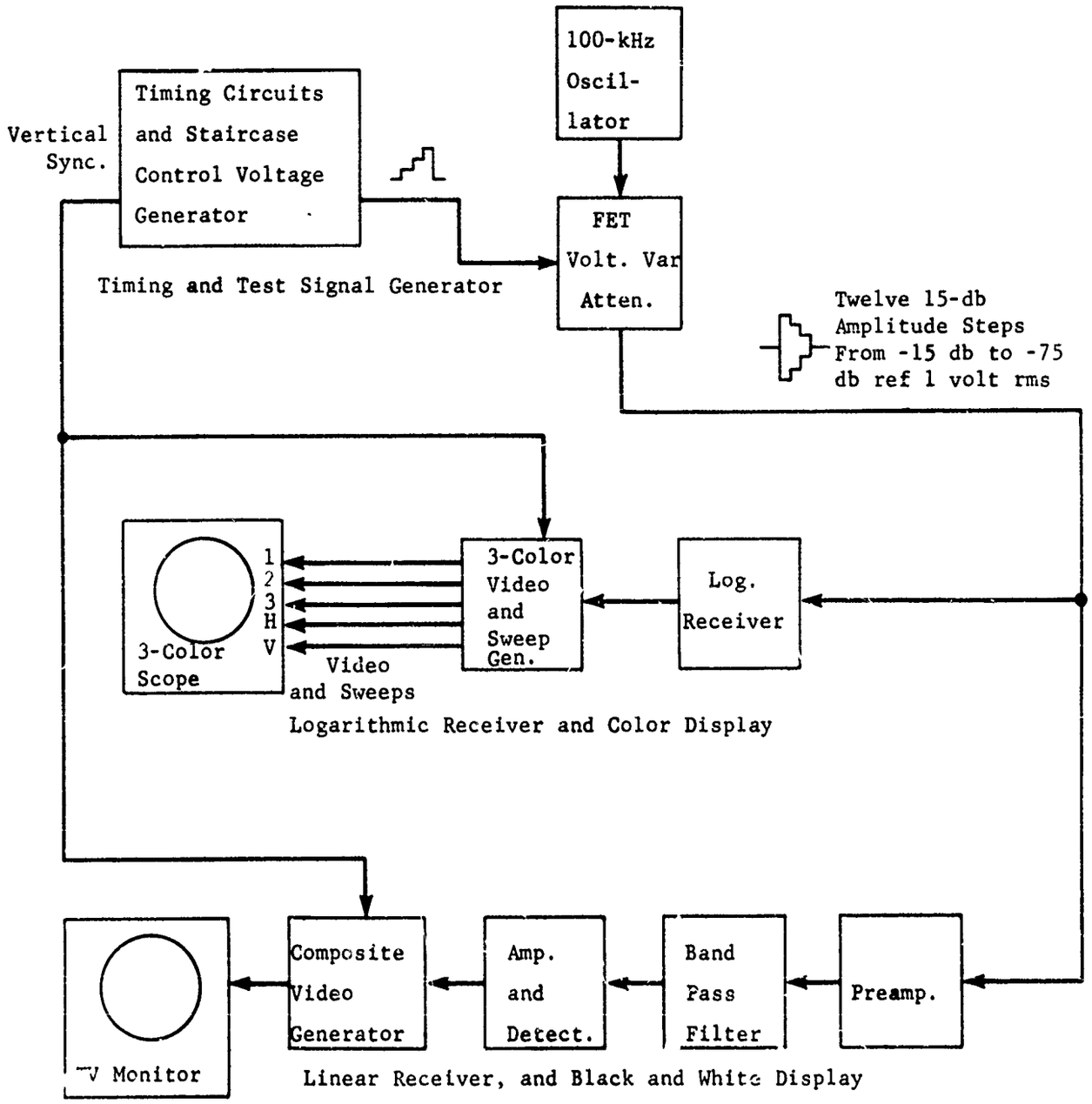

FIGURE 8. BLOCK DIAGRAM OF COLOR, AND BLACK AND WHITE RECEIVER COMPARISON

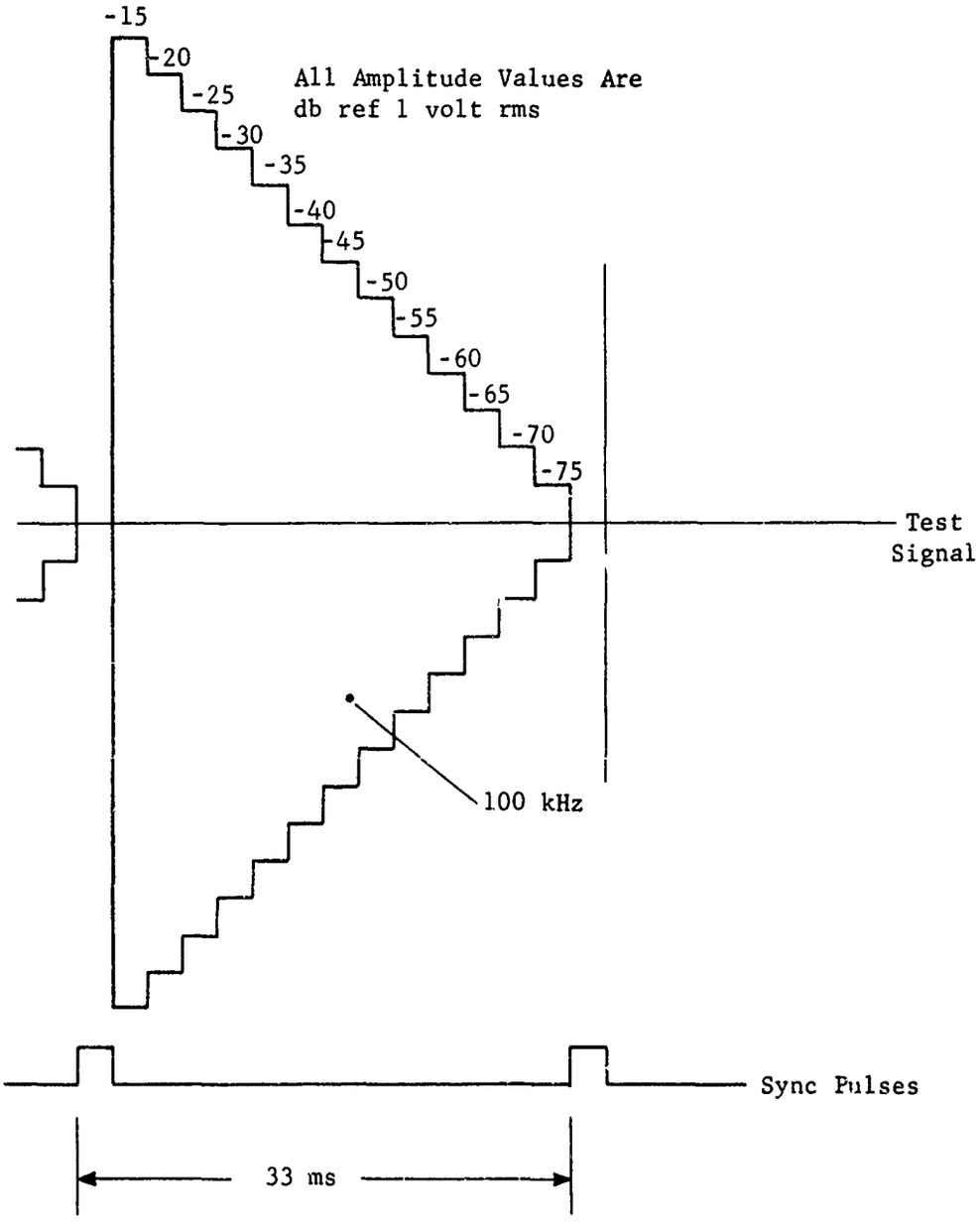

FIGURE 9. TEST SIGNAL AND SYNCHRONIZATION SIGNAL

(Reverse Page 18 Blank)

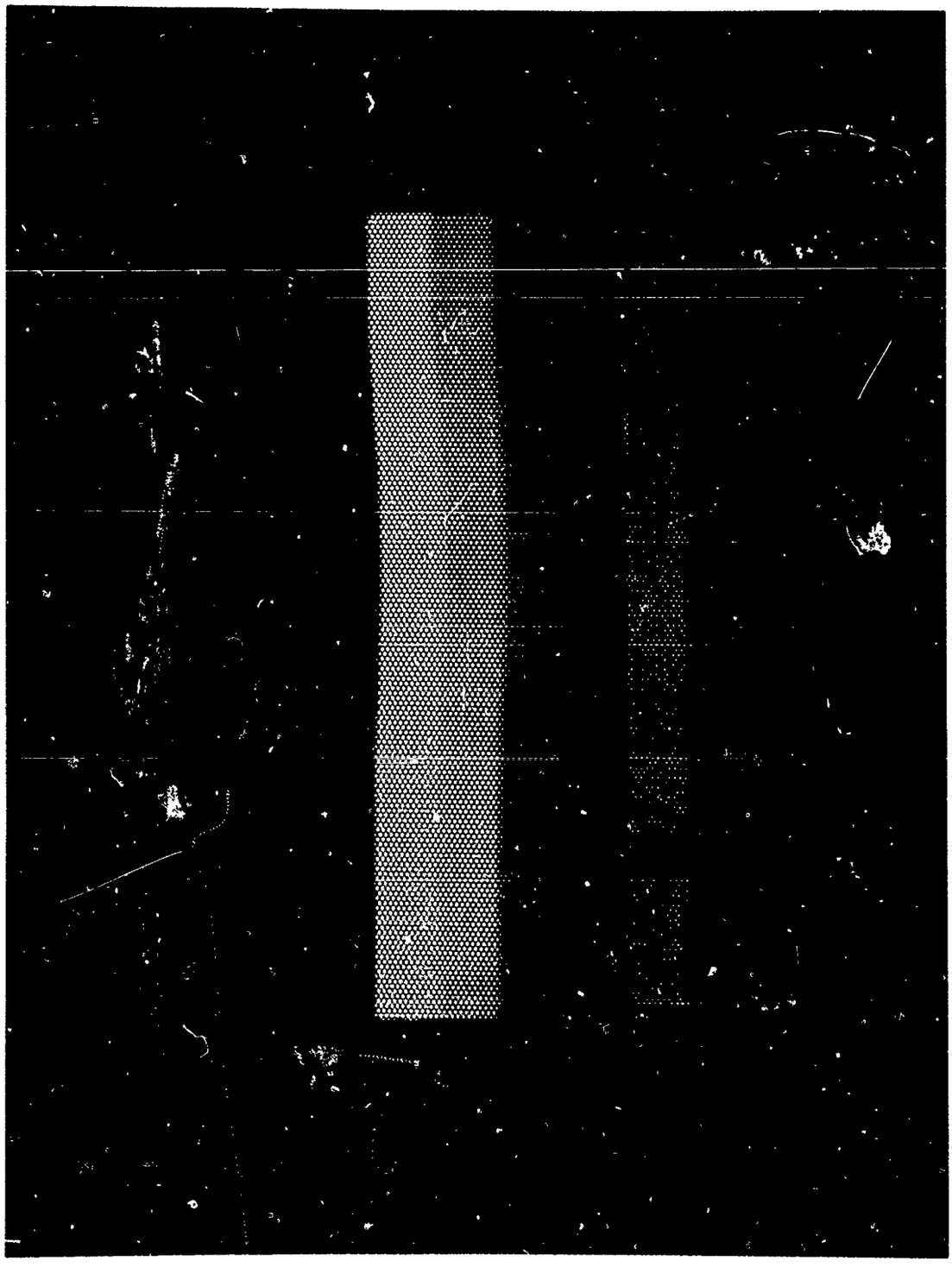

FIGURE 10. THREE-COLOR DISPLAY TEST RESULTS

(Reverse Page 20 Blank)

COLOR ILLUSTRATIONS REPRODUCED
IN BLACK AND WHITE

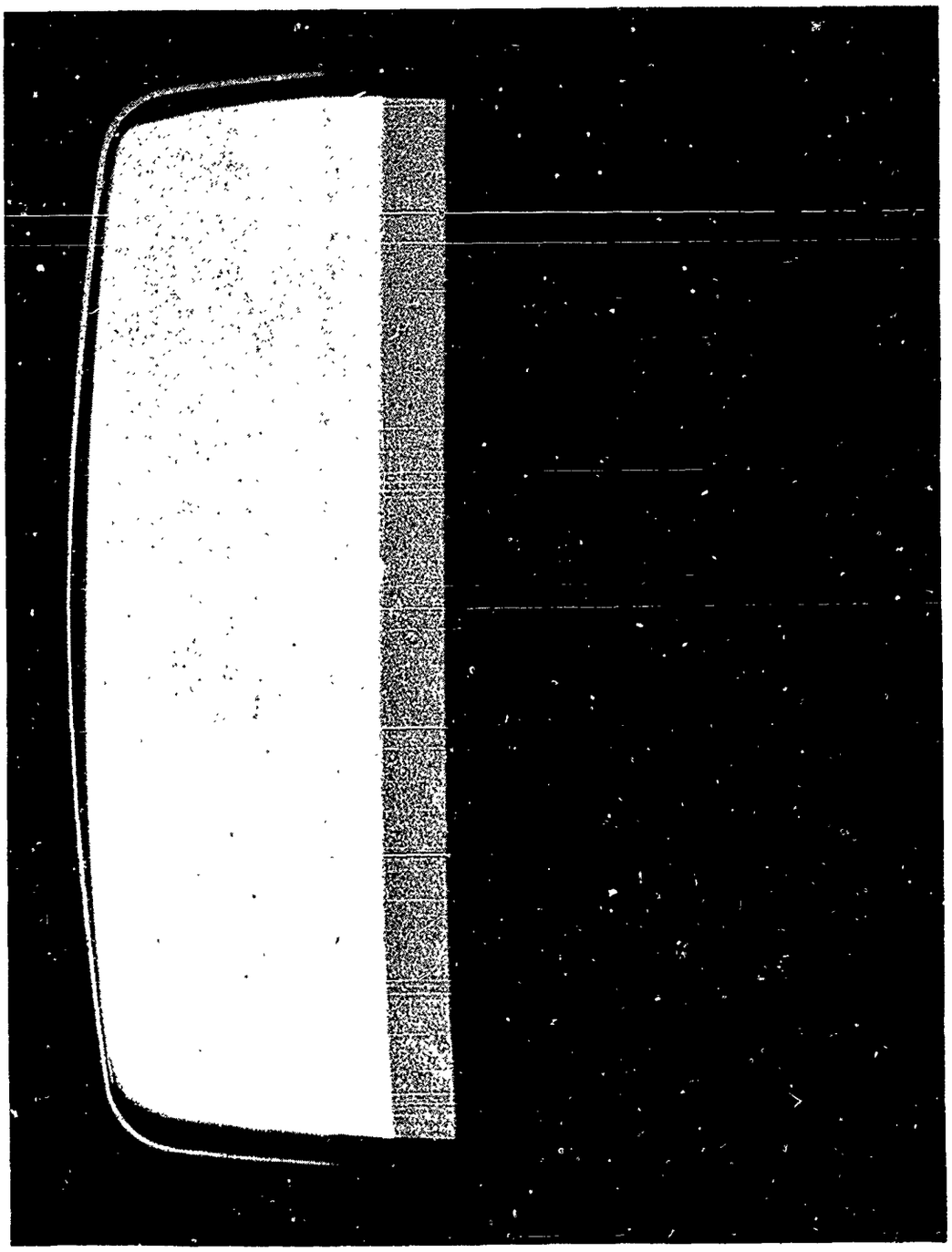

FIGURE 12. BLACK AND WHITE DISPLAY TEST RESULTS
(GAIN INCREASED)

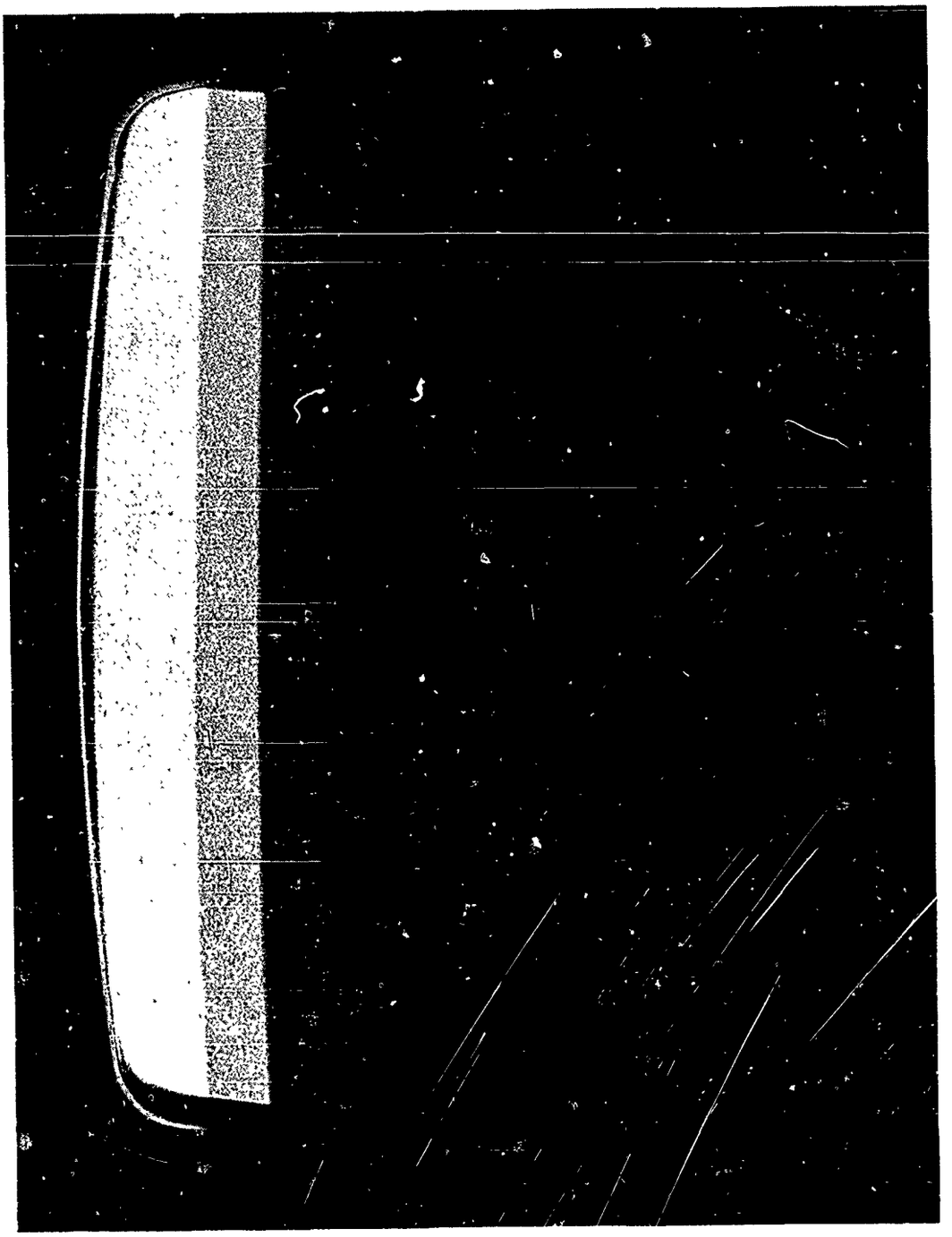

FIGURE 11. BLACK AND WHITE DISPLAY TEST RESULTS
(GAIN DECREASED)

the display. Five different brightness levels may be seen indicating a dynamic range of about 25 db. The lowest level step visible was -35 db (ref 1 volt rms). The linear receiver gain was increased, and the result is shown in Figure 12. The -30 db step just failed to saturate the display, and the -50 db step was just perceptible indicating a dynamic range of slightly more than 20 db. The three highest level steps saturated the display and were indistinguishable. Thus, the linear receiver single-color display (using a monochrome TV CRT) is capable of detecting and displaying a dynamic range of signals of about 25 db for a given gain setting. The gain setting determines which 25 db range of input signals will be displayed.

RECOMMENDED CIRCUIT IMPROVEMENTS

Consideration was given to improvements in the video and receiver circuitry, and some modifications have been made. For example, the diode gates in the video circuits (Figure 4) have been replaced with FET gates. With FET gates, the differential amplifiers are no longer needed, reliability is increased, and an adjustment in each channel is eliminated. The logarithmic receiver could be improved by the use of special logarithmic diodes so that the voltage transfer characteristic of the receiver (Figure 3) would be more nearly a true logarithmic function. This would result in the three video voltage ranges being more nearly equal allowing simplification of the video expander amplifiers.

A major simplification of the system would be achieved if the logarithmic receiver were replaced with a linear receiver with a dynamic range of 60 db or greater. This change would obviate the use of expander amplifiers in the video circuits. This would eliminate the two most critical circuits. The preamplifier stage in the logarithmic receiver is a linear amplifier with a dynamic range exceeding 75 db. The gain stages following the preamplifier could be designed to operate at higher voltage levels. This would allow linear amplification of the preamplified signals over the required dynamic range. The remaining problem would be that of obtaining a linear envelope detector with a sufficient dynamic range. A possible solution is the use of an operational amplifier with diodes in the feedback loop. One such detector recently constructed was linear over a range of about 50 db. The use of a higher gain operational amplifier with a greater output voltage swing capability would extend this range to greater than 60 db.

CONCLUSIONS

It has been shown that the logarithmic receiver three-color display system offers a means of significantly improving the dynamic range capability of a sonar system thereby allowing detection and display of targets whose echo levels vary over a wide range. Detection and display of a wide range of signal levels is accomplished without changing the system gain. A linear receiver, single-color display system requires a gain change, and is capable of detecting and displaying a relatively narrow range of target echo levels for a given system gain. The concept is not limited to sonar, but may be applied in general to any system requiring a wide dynamic range capability.

Security Classification

DOCUMENT CONTROL DATA - R & D

(Security classification of title, body of abstract and indexing annotation must be entered when the overall report is classified)

1. ORIGINATING ACTIVITY (Corporate author) Naval Ship Research and Development Laboratory Panama City, Florida 32401	2a. REPORT SECURITY CLASSIFICATION UNCLASSIFIED 2b. GROUP

3. REPORT TITLE

LOGARITHMIC SONAR RECEIVER AND THREE-COLOR DISPLAY

4. DESCRIPTIVE NOTES (Type of report and inclusive dates)
Research and Development--Interim Report

5. AUTHOR(S) (First name, middle initial, last name)

Bobby R. Ludlum

6. REPORT DATE June 1969	7a. TOTAL NO. OF PAGES 24	7b. NO. OF REFS --
8a. CONTRACT OR GRANT NO. b. PROJECT NO. Subproject SF 26 121 102 c. Work Unit No. 13298-1-1 d.	9a. ORIGINATOR'S REPORT NUMBER(S) 2910 9b. OTHER REPORT NO(S) (Any other numbers that may be assigned this report)	

10. DISTRIBUTION STATEMENT This document is subject to special export controls and each transmittal to foreign governments or foreign nationals may be made only with prior approval of the Naval Ship Research and Development Laboratory, Panama City, Florida 32401.

11. SUPPLEMENTARY NOTES	12. SPONSORING MILITARY ACTIVITY Commander Naval Ship Systems Command Washington, D. C.

13. ABSTRACT

This report describes a sonar receiver and display system utilizing a logarithmic receiver and a three-color cathode ray tube display with a dynamic range capability greater than 60 decibels. Experimental test results are presented that compare the operation of the logarithmic receiver and three-color display system with that of a linear receiver and monochromatic cathode ray tube display system. ( )

DD FORM 1 NOV 65 1473

Security Classification

Security Classification

14 KEY WORDS	LINK A ROLE	LINK A WT	LINK B ROLE	LINK B WT	LINK C ROLE	LINK C WT
Logarithm functions						
Sonar receivers						
Display devices						
Color television tubes						
Comparison						
Echo ranging						
Distance						
Video amplifiers						
Experimentation						
Sonar detection						

Security Classification