UNCLASSIFIED

AD NUMBER
AD854099
LIMITATION CHANGES
TO: **Approved for public release; distribution is unlimited.**
FROM: **Distribution authorized to U.S. Gov't. agencies only; Administrative/Operational Use; AUG 1968. Other requests shall be referred to Naval Avionics Facility, Indianapolis, IN 46218.**
AUTHORITY
NAFI, per DTIC Form 55

THIS PAGE IS UNCLASSIFIED

AD854099

TR 1235
9 AUGUST 1968

APPLIED RESEARCH DEPARTMENT

A DESCRIPTION OF SEVERAL FLUIDIC BREADBOARDS BUILT TO INVESTIGATE TRANSMISSION INFORMATION OVER ONE TUBE

EACH TRANSMITTAL OF THIS DOCUMENT OUTSIDE THE AGENCIES OF THE U. S. GOVERNMENT MUST HAVE PRIOR APPROVAL OF NAVAL AVIONICS FACILITY, INDIANAPOLIS, INDIANA.

DDC
RECEIVED
JUN 24 1969

NAVAL AVIONICS FACILITY
INDIANAPOLIS, INDIANA 46218

54

NOTICES

The discussions, data, or opinions concerning commercial products herein do not constitute an endorsement or condemnation by the government, nor do they convey or imply the right to a license for use of such products. Information contained in the report shall not be given to unauthorized persons.

PREFACE

This report describes the results of tests made on three fluidic breadboard systems which were built to investigate binary digital information transmission over one tube. These systems were built to provide preliminary information on fluidic technology for the One Wire Aircraft Monitor and Control (OWAM) program. A system mechanized with fluidics has been considered for this program because of its inherent ability to operate at high temperature and an inherent high reliability.

The author thanks Mrs. Vivian L. McGinley and Miss Carole Wright for typing the manuscript.

This work was accomplished under OWAM AIRTASK A05510031/2311/A107-00-00, Work Unit No. AIR-53211B-7, at the direction of NAVAIRSYSCOM (AIR-53211B).

Prepared by Larry F. Zimmerman
LARRY F. ZIMMERMAN

Approved by Charles W. May
CHARLES W. MAY, Chief of
Radar Microwave Branch

Francis A. Marasco
FRANCIS A. MARASCO, Manager of
Experimental Research Division

ABSTRACT

This report describes three air powered fluidic systems which transmit four bits of information with only one 50-foot plastic tube between the transmitter and the receiver. A different air pulse modulation technique is used for each system. These techniques include pulse amplitude, pulse count, and pulse width modulation. Limited temperature and pressure tests were run on the pulse amplitude modulated system.

TABLE OF CONTENTS

		Page
	PREFACE	iii
	ABSTRACT	iv
	LIST OF TABLES	vii
	LIST OF FIGURES	vii
I.	INTRODUCTION	1
	A. FLUIDICS AND THE OWAM SYSTEM	1
	B. FLUIDIC SYSTEM FUNCTION	1
	C. AIR PULSE MODULATION TECHNIQUES	2
	1. Pulse Amplitude Modulation (PAM)	2
	2. Pulse Count Modulation (PCM)	2
	3. Pulse Width Modulation (PWM)	2
	D. BREADBOARD MODEL ASSEMBLY	2
	E. PRESSURE TESTS	3
	F. TEMPERATURE TESTS	3
II.	CONCLUSIONS	4
III.	RECOMMENDATIONS	4
IV.	RESULTS	5
	A. DEVELOPMENT OF THE THREE FLUIDIC SYSTEMS	5
	B. PAM SYSTEM RESULTS	6
	C. PCM SYSTEM RESULTS	6
	D. PWM SYSTEM RESULTS	8
	E. PAM SYSTEM TEMPERATURE TEST RESULTS	8
	F. PAM SYSTEM PRESSURE TEST RESULTS	9
V.	DISCUSSION	9
	A. OPERATION OF THE THREE SYSTEMS	9
	1. Power Supply	9
	2. Operation of the Transmitters	9
	3. PAM Receiver Operation	11
	4. PCM Receiver Operation	12
	5. PWM Receiver Operation	13
	B. SYSTEM HARDWARE	13
	C. DISCUSSION OF COMPONENT AND SYSTEM FAILURES	14

TABLE OF CONTENTS (CONTINUED)

	Page
D. PRESSURE AND TEMPERATURE TESTS ON THE PAM SYSTEM --	15
1. Pressure Test ----------	15
2. Temperature Test ----------	17
APPENDIX A - SCHEMATICS OF BREADBOARD MODELS ----------	A-1
APPENDIX B - PARTS LIST ----------	B-1
APPENDIX C - COMPONENT DESCRIPTION ----------	C-1

LIST OF TABLES

Table		Page
1.	Temperature Test Setups	20
2.	Definition of System Operation	21

LIST OF FIGURES

Figure		Page
1.	PAM Breadboard Model	7
2.	Schmitt Trigger Switching Levels and Pulse Levels Required for Correct Pulse Reception in the PAM System	16
3.	Temperature Test Setup for the PAM Syst m	19
A-1.	Pulse Amplitude Modulation System	A-2
A-2.	Pulse Count Modulation System	A-3
A-3.	Pulse Width Modulation System	A-4
C-1.	Standard OR/NOR Gate and Truth Table	C-3
C-2.	Back Pressure OR/NOR Gate	C-4
C-3.	Flip-Flop (Bistable) and Truth Table	C-6
C-4.	Active AND Gate and Truth Table	C-7
C-5.	Passive AND Gate and Truth Table	C-9
C-6.	One Shot Multivibrator and Signal Characteristics	C-10
C-7.	Schmitt Trigger	C-11
C-8.	Oscillator	C-12
C-9.	Up/Down Counter and Truth Table	C-13
C-10.	Four Stage Counter and Output Waveforms	C-15
C-11.	Single Stage Shift Register and Truth Table	C-16

I. INTRODUCTION

A. FLUIDICS AND THE OWAM SYSTEM

The OWAM system is required to operate at temperatures above the normal capability of electronic devices. For this basic reason, fluidic components, which are capable of operating at high temperatures, have been considered to implement the OWAM system.

B. FLUIDIC SYSTEM FUNCTION

The function of the OWAM system is to control and monitor the states of one to six weapons which are located at distances up to 50 feet from the OWAM system command station. Control information must be sent from the command station to the weapon stations and monitor information must be returned to the command station.

The major design objective for the OWAM system is the reduction of the number of interconnecting lines between the command station and the weapon stations to a minimum. An idealized system would utilize a single transmission line, from which was derived the system nomenclature, One Wire Aircraft Monitor and Control.

A more practical conception for a fluidic OWAM system has three interconnecting tubes (lines). One tube is for emergency safing of the weapons and another is for the system supply air. The third tube is for bidirectional information transmission between the command station and the weapon stations.

The effort described in this report was initiated to determine if coded digital information could be transmitted through a long transmission tube using fluidic elements for the transmitter and receiver. Only one-way information transmission was considered.

Three fluidic systems were designed and breadboard models were built. The information transmitted in these models was encoded into four binary digits (bits). The states of these bits were stored initially in a four bit shift register in the transmitter. When a signal was applied to transmit

the information, the state of each bit (four bits in all) was sent through a fifty foot plastic tube in the form of modulated air pulses. At the receiving end of the tube, the state of each bit was sequenced into a shift register for storage.

C. AIR PULSE MODULATION TECHNIQUES

For each system, a different air pulse modulation technique was used to transmit the binary digits through the single transmission tube to the receiver.

1. Pulse Amplitude Modulation (PAM)

The first system employed pulse amplitude modulation. Pulses with two different pressure amplitudes above the ambient pressure level are transmitted through the transmission tube to the receiver. At the receiver, two Schmitt Triggers detect these pulses.

2. Pulse Count Modulation (PCM)

The second system used pulse count modulation. PCM is used to allow the receiver to detect only the number of pulses and not differences in their amplitudes or shapes. With PCM, one and two pulses are transmitted in equal time intervals through the transmission tube to the receiver. This corresponds to the transmission of a binary zero and one bit, respectively. A counter detects the absence or presence of the second pulse at the receiver.

3. Pulse Width Modulation (PWM)

The third system employed pulse width modulation. A short and a long pulse are sent through the transmission tube to the receiver for a zero and one bit, respectively. At the receiver, an oscillator, which drives a counter, is turned on for the duration of the transmitted pulse. If a high binary output is obtained from the counter, a long pulse was sent through the transmission tube; if a high binary output is not obtained, a short pulse was sent.

D. BREADBOARD MODEL ASSEMBLY

The breadboard models were constructed with Corning Glass fluidic components, Fluidonic capacitors, and plastic tube interconnections.

For the assembly of these parts, low frequency pressure gauges were used to determine the pressure levels required for the component control signals and air supplies. The absence[1] or presence of some of the air signals was displayed by Honeywell indicators. It was also noted that the human sense of touch and hearing were adequate fluidic sensors in many cases.

E. PRESSURE TESTS

The pressure tests were conducted to determine the range of supply pressure and the range of ambient pressures at which the PAM system would operate. The supplies on the transmitter and the receiver were varied together to determine the range when the supply pressure was the same at the transmitter and receiver.

Since the transmitter of the OWAM system is required to operate at a different ambient pressure (a difference which may approach 14 psig.) than is present at the receiver, the supply pressures of the transmitter and the receiver of the P/M breadboard were varied separately to simulate the change in ambient pressure. Varying the supply pressures is similar to varying the ambient pressures since fluidic components are dependent on the pressure differential across them. That is, they are not dependent on the absolute values of supply and ambient pressures.

F. TEMPERATURE TESTS

When the three breadboards were completed, brief temperature testing was performed on the PAM breadboard. The OWAM system is required to operate with the transmitter at a relatively fixed temperature and the receiver at a highly variable one. Corresponding to this requirement, the PAM system transmitter was left at room temperature and the receiver was placed in a temperature chamber. The desired testing range was from -55°C to 200°C.

[1] See Appendix C for definitions of absence or presence of air signals and on or off signals.

II. CONCLUSIONS

The results of this program indicate that an air powered fluidic system is capable of transmitting binary digital information with one transmission tube between the transmitter and receiver. The serial information transmission may be effected by several methods of air pulse modulation. The pulse modulation techniques include pulse width modulation (PWM), pulse amplitude modulation (PAM), and pulse count modulation (PCM).

III. RECOMMENDATIONS

Though the basic function of serial digital information transmission was demonstrated with the three breadboard models, other OWAM system requirements must be met by the models before any one of them can be made into a practical system. These requirements include a faster data transmission rate, more reliable operation, wider operational temperature range, and greater system packing density.

To facilitate the development of models with increased data rates and improved reliability, additional test equipment is required. This test equipment is necessary to monitor transient air flow and pressure characteristics.

The models could not operate up to 200° C because the plastic tubing, the epoxy which holds the hose fittings on the ceramic glass components and the indicators are all rated below this temperature. The components should be made entirely from materials such as ceramic glass or stainless steel and the tubing should be made with materials such as copper, stainless steel, or teflon.

For operation of the system at low temperatures (to -55°C), an air dryer should be used to decrease the dew point of the supply air to below -55°C.

No attempt was made to package the breadboard models. However, two model characteristics were evident which would preclude a high system

packing density. These characteristics were the variety of component shapes and sizes, and the interconnection of these components with plastic tubing. Since a high component packing density is required by the OWAM system, future breadboard models should be built with methods which allow for this requirement.

IV. RESULTS

A. DEVELOPMENT OF THE THREE FLUIDIC SYSTEMS

The PAM, PWM, and PCM systems were built into breadboard models. Each system transmitted four binary digits using a single 50-foot information transmission tube between the transmitter and the receiver.

The bit rates for these systems were very low; a maximum rate of about 10 bits/second was obtained with the PAM system. For each system, the bit rate was basically limited by the low pulse reception rate which was obtained at the receiver end of the 50-foot transmission tube. A possible cause of the low pulse reception rate was the mismatch in the impedance of the transmission tube and the transmitter and the transmission tube and the receiver. Another probable cause of the low pulse transmission rate includes the combined effect of pulse degradation through the 50-foot tube and the frequency limitations of the Schmitt Trigger(s) which receive the pulses. Along with the low pulse transmission rates through the 50-foot tube, there were system limitations on the bit rates. These system limitations usually resulted from the inherent component characteristics and the three receiver designs.

The breadboard systems failed to operate for a variety of reasons. Changes in the supply pressures (even a slight amount in some cases) caused interaction failures between components. Frequency changes, due to variation in the oscillator supply pressure, also caused the systems to fail. Other failures were caused by blocked bleed ports and unreliable tube connections.

The extent to which the aforementioned problems affected system operation was not thoroughly investigated because of man-hour and equipment limitations.

B. PAM SYSTEM RESULTS

Figure 1 is a photograph of the PAM system breadboard model. The PAM system had both the highest word transmission rate (about 10 bits/second) and the simplest design. However correct adjustments of the Schmitt Trigger levels and the pressure levels of the transmitted pulses were difficult to make because:

1. The available gauges could not be used to measure pressures at these levels (less than 1 psig.), and

2. The needle valves (restrictors) used to adjust the pulse amplitudes were extremely sensitive to vibration. (No part number could be found for these valves.)

An effort was made to increase the bit transmission rate by increasing the frequency of the oscillator which provides the time base for the system. Pulse levels were detected correctly by the Schmitt Triggers at higher pulse rates, but an undetermined malfunction in the receiver prevented correct bit reception by the shift registers.

C. PCM SYSTEM RESULTS

The bit rate for the PCM system was low (about one bit/second) and the system occasionally operated unpredictably.

For the PCM system, two pulses were transmitted through the 50-foot transmission tube to represent a binary one digit. The time required to send this bit determined and was the same as the time required to send one pulse for the zero bit. In comparison, one pulse is used for each bit in the PAM and PWM systems. Therefore, the time required to send a bit with the PCM system is necessarily twice that required for the other two systems. Furthermore, reliable transmission of data with the PCM system necessitated long pulse widths, which additionally decreased the bit rate.

The irregular operation of the system was caused by an oscillator (OSC 1), the function of which was to add delay in the transmission time between bits. The required delay for OSC 1 was almost a second. To attain this delay, a 10-foot 1/4-inch ID tube was used for the delay line (or

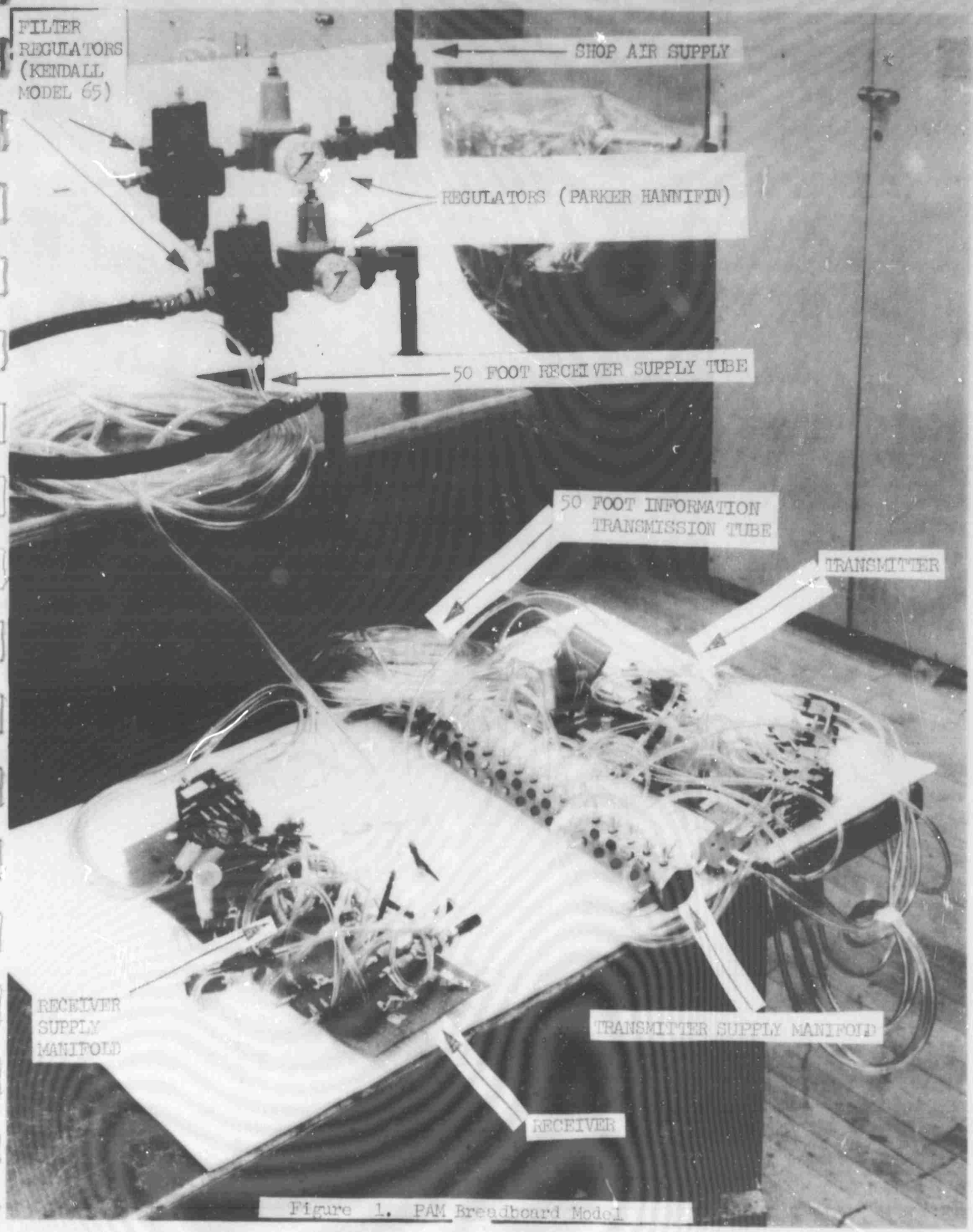

Figure 1. PAM Breadboard Model

capacitance) on the oscillator. With this capacitor, the oscillator was unstable.

D. PWM SYSTEM RESULTS

The PWM system operated consistently with a bit rate of two to five bits per second. This bit rate was essentially limited by the method of detection of the long and the short pulses which represent the logic one and the logic zero bits respectively.

The counter used in the receiver of this system was built from two 4-stage Corning counters. This counter failed on occasion. Not all of the causes of these failures were determined. However, they included improper loading on the counter outputs and an inadequate air flow to the counter supply ports.

E. PAM SYSTEM TEMPERATURE TEST RESULTS

The PAM receiver was placed in the temperature chamber and the temperature was varied up to 70°C in the high temperature tests and down to -87°C in the low temperature tests. For each test, several discrete temperatures were selected and each was held for a period of time. Times between the selected temperatures were usually less than two minutes and were not recorded.

The high temperature tests were limited to 70°C because at this temperature, the plastic tubing on the receiver failed.

The system operated at low temperatures until frost obstructed the receiver components. Under the best operating conditions, the system operated for several 15 minute periods at temperatures near -55°C. Two test conditions which affected system operation were:

1. The use of filters for the system supply air. One 5-micron mesh filter[1] was line-mounted to the transmitter air supply and another was line-mounted to the receiver air supply. With these filters, the system operated longer and with much less frost accumulation on the receiver components.

[1] Kendall Model 65 pneumatic pressure regulator with a 5-micron filter element.

2. The location of the receiver power supply tube. When most of this tube was placed inside the chamber, much of the moisture from the room temperature supply air condensed and froze in the tube. This permitted the system to operate longer because less moisture reached the components. With the tube outside the chamber, the room temperature supply air reached the low temperature receiver components with a full load of moisture and the resulting frost caused a more rapid system failure.

F. PAM SYSTEM PRESSURE TEST RESULTS

The results of the pressure tests show that the PAM system would operate with a supply pressure range of 4 to 8 psig as long as the transmitter and the receiver supply pressures were the same.

When the transmitter supply pressure was held at 6 psig, the supply pressure of the receiver could be varied from 5 to 7 psig without a system failure. Also, a supply pressure range of 5 to 7 psig was usable at the transmitter when the receiver supply pressure was held at 6 psig.

V. DISCUSSION

A. OPERATION OF THE THREE SYSTEMS

1. Power Supply

The air supply for the three system models was obtained from shop air through two line-connected Hannifin regulators[1]. These regulators did not filter the supply air. One of the regulators was connected to a 22-inch long 1-inch ID pipe, with approximately 200 hose fittings for 1/8 inch ID tubing. This pipe or supply manifold was used to fan out to the receiver and transmitter components. The second regulator was available for components which could not use the supply manifold pressure and was used to supply the receiver during the temperature and pressure tests.

2. Operation of the Transmitters

The transmitter is similar for all three systems. Four back-pressure

[1] Parker Hannifin Corporation Number R-2050

switches are set by the operator to store binary information into a four-stage shift register. Having stored the information, the operator begins the four-bit transmission cycle by activating a timing oscillator with a fifth back-pressure switch. The output pulses of the timing oscillator are used:

a) to drive a counter,

b) to shift the stored information serially to the last stage of the shift register,

c) and to gate the last stage shift register outputs through respective AND-gates.

The outputs of the aforementioned counter are decoded by a four-input OR/NOR gate, which stops the oscillator after four oscillator pulses. The PAM and PWM systems transmit four bits corresponding to these four pulses, but the PCM system transmits only one bit. For the latter system, the counter outputs could be decoded by the four input OR/NOR gate to stop the oscillator after 16 pulses and thus 4 bits. However, the PCM receiver was unable to correctly detect more than one consecutive bit from the transmitter at the rate determined by the timing oscillator[1]. Therefore, an additional oscillator (OSC 1) was used to increase the bit spacing for the PCM system. In this system, the fifth back-pressure switch starts OSC 1. The first pulse from OSC 1 activates the timing oscillator. After the timing oscillator has pulsed four times, it is shut off by the counter and the OR/NOR gate as mentioned previously. After a delay, the second OSC 1 pulse restarts the timing oscillator for another four-pulse sequence. This process continues until four 4-pulse sequences are completed. A second four input OR/NOR gate decodes the counter to stop OSC 1 after 16 timing oscillator pulses.

The parallel information stored in the shift register is shifted serially to the last stage by oscillator pulses in the PAM and PWM systems and by counter pulses in the PCM system. The two last stage shift register outputs provide this information in time in the form of two inverted non-

[1] See V.,A.,4. PCM Receiver Operation

return-to zero (NRZ) signals. The on and off states of an NRZ signal are defined as the presence and absence, respectively, of a 1 to 2 psig pressure.

The NRZ signal from the TO NEXT STAGE output of the shift register is defined as the binary one signal. When the NRZ signal from this output is on, a binary one is to be transmitted to the receiver. The inverted or binary zero NRZ signal comes from the OUTPUT port on the last shift register stage. Similarly, this signal is on when a binary zero is to be transmitted.

These NRZ signals are converted to a return-to-zero (RZ) signal for transmission through the 50-foot transmission tube. The RZ signal is produced by two AND-gates, each of which has one of the inverted NRZ signals as an input. For the PAM and PWM systems, the second input to the AND-gates is provided by an oscillator pulse. This pulse will trigger the AND-gate that has the "on" NRZ signal as an input. The pulses from one AND-gate are modulated[1] to distinguish them from pulses from the other AND-gate and the pulses from both AND-gates are fed into the 50-foot transmission tube. These AND-gates are termed "zero" or "one" depending on whether the zero or one NRZ signal is the input. For the PCM system, two counter outputs are used to gate the NRZ signals through the AND-gates. One output provides a single pulse to the "zero" AND-gate during the time in which the other provides two pulses to the "one" AND-gate. When these counter pulses are present and the respective NRZ inputs are on, the former AND-gate will pulse once and the latter will pulse twice. Both AND-gate outputs are fed into the 50-foot transmission tube.

3. PAM Receiver Operation

For the pulse amplitude modulation system, the supply pressure on the one AND-gate is set higher than the supply pressure on the zero AND-gate. Therefore, the former AND-gate transmits a higher pressure pulse through the 50-foot transmission tube than the latter AND-gate. At the receiver, two Schmitt Triggers receive the pulses from the 50-foot transmission tube. The

---

[1]See V.,A.,3. PAM Receiver Operation
and V.,A.,5. PWM Receiver Operation

zero Schmitt Trigger is switched by all pulses and transmits clock or shift pulses to the four-stage shift register. Each clock pulse shifts the information stored in each stage to the following stage. The one Schmitt Trigger is switched by the high pressure pulse only, and it sends a pulse to the IN port of the first stage of the shift register. If the IN port signal is not present and a clock pulse is applied to the first stage, a zero bit is set into the first stage of the shift register. When both signals are present, a one bit is set into the first stage. The binary modes of the receiver shift register stages are displayed by Honeywell indicators. These indicators are used for the outputs on all three fluidic systems. For further details of the PAM system operation, see Appendix A.,1. PAM Schematic.

4. PCM Receiver Operation

The PCM receiver determines if a one or a zero bit was transmitted by detecting the presence or absence of a pulse within a definite time interval following a previously transmitted pulse.

At the receiver, all pulses from the transmitter are detected and amplified at the end of the 50-foot transmission tube by a Schmitt Trigger. The first pulse entering the receiver drives a counter whose first stage output triggers a flip-flop, which in turn triggers a one shot. The one shot provides the shift pulses to the shift register which transfers the binary information serially from stage to stage. While the one shot pulse is on, a second pulse may be registered by the counter from the transmitter. If a second pulse is registered, the second stage counter (CR 2) output sends a pressure signal to the IN port of the first stage of the shift register. With this pressure signal on the IN port, an applied shift pulse will set a one bit into the first stage shift register. If no signal is present on the IN port, an applied shift pulse will set a zero bit into the first stage. When the one shot pulse ends, pressure signals are sent to reset the flip-flop and the counters to initial states. When these initial states are attained, the receiver is ready to accept another bit from the transmitter.

A delay is required between bits to allow the flip-flop and the counter to be reset. This delay was longer than that provided by the transmitter when the timing oscillator determined the bit spacing. For this reason, additional delay between bits was provided by an oscillator (OSC 1) in the transmitter.[1] See A,2. PCM Schematic.

5. PWM Receiver Operation

The PWM system transmits a short pulse through the 50-foot transmission tube to represent a binary zero and a long pulse to represent a binary one. The width of the long pulse is determined by the oscillator pulse which gates the one NRZ output of the fourth stage of the shift register through the one AND-gate. The width of the short pulse is determined by a one shot which is driven by the zero AND-gate. At the receiver, both short and long pulses are used to shift information serially through the last three stages of the shift register. The first stage is not shifted by these pulses because information is set or reset into this stage in the following manner. Each pulse which enters the receiver from the 50-foot tube starts an oscillator. The output of this oscillator drives a counter as long as the pulse is present. When a long pulse is received, the oscillator drives the counter until an output is obtained from the fifth stage of the counter. This output resets[2] the first stage of the shift register. If a short pulse is received and no output is obtained from the fifth stage of the counter, the first stage is set. See Appendix A.,3. PWM Schematic.

B. SYSTEM HARDWARE

The three fluidic systems were for the most part built with Corning Glass components--the exceptions being the capacitors, indicators, and interconnection tubing and devices. Corning Glass components were used because a wide variety of logic functions were available and because these components were easily interconnected.

---

[1] See V.,A.,2. Operation of the Transmitters

[2] The set or reset on a shift register stage turns the zero (OUTPUT port) or one (TO NEXT STAGE port) signal on, respectively. Note that this is in contradiction to standard logic terminology

Available functions included OR/NOR gates, flip-flops, AND-gates, counters, shift registers, oscillators, one shot multivibrators, and Schmitt Triggers. These functions are all required for the three systems.

Interconnections were made with 1/8 and 1/4-inch ID plastic tubing. This tubing was simply pushed over the hose fittings on the components. Reducer connectors were used to connect different tubing sizes, and Y-devices were used for multiple connections to one tube.

Capacitors are better described as sealed empty cans each with two attached hose fittings. These were obtained from Fluidonics and were available in three sizes.

C. DISCUSSION OF COMPONENT AND SYSTEM FAILURES

The following Corning Glass fluidic components failed:

1. A flip-flop had a leak near the supply port. This was repaired using epoxy.

2. A Schmitt Trigger had flow coming from both output ports simultaneously. The cause of this malfunction was not determined.

The following were system failures:

1. If a component bleed port was obstructed, the component usually malfunctioned. The AND gates were especially sensitive to bleed port obstruction.

2. Improper control or supply pressures and flows resulted in component failures. For example, if the control signal to a one shot multivibrator was too large, the excess flow would exit through the wrong output.

3. Inadequate control signals resulted from excessive fan-out of the standard Corning Glass component outputs. A standard Corning Glass component could fan-out to two similar components or to one 2X Corning Glass component.

4. During the temperature tests, several Schmitt Triggers functioned incorrectly. See V.,D.,2,h. Schmitt Trigger Failures.

5. The one shot multivibrators and OR/NOR gates could not be used to transmit pulses through the 50-foot transmission tube. The transmission tube was connected to the normally "off" output of the components.

Ordinarily, if the OR/NOR and the one shot had pulse inputs, they would produce pulses from the normally off output. But when the transmission tube was connected to this output, the signal would not return to the "on" component output. The cause of the problem was surmised to be an impedance mismatch between the components and the tube.

6. Failure of the plastic tubing was a common source of system malfunction. This tubing became bent to a degree that would not allow the passage of air flow. Also, the tub g ends became stretched and broke loose from the component hose fittings. During the high temperature tests, tubing failure precluded system operating temperatures higher than 70°C. See V.,D.,2,b. Test 3.

D. PRESSURE AND TEMPERATURE TESTS ON THE PAM SYS"EM

The PAM system was tested to determine what effects temperature and pressure changes would have on the fluidic systems. The OWAM system transmitter and receiver may be separated up to 50 feet. To allow this separation in the breadboard model, a 50-foot $\frac{1}{4}$ inch ID tube was used to connect an air supply regulator to the receiver. This regulator, though connected to the same shop air supply line, was distinct from the regulator which supplied the transmitter.

The pressure and temperature tests are described below.

1. Pressure Test

Changes which could be tolerated in the supply pressures at the transmitter and the receiver were limited by the resultant changes on the pressure levels of the pulses transmitted through the fifty foot tube and on the Schmitt Trigger switching levels. Correct pulse reception required that the pulse with the low pressure level would cause one Schmitt Trigger (ST) to switch while the pulse with the high pressure level would cause both Schmitt Triggers to switch. The high and low level pulse and the Schmitt Trigger switching levels required for correct pulse reception are sketched in Figure 2. Since the switching level of a standard Schmitt

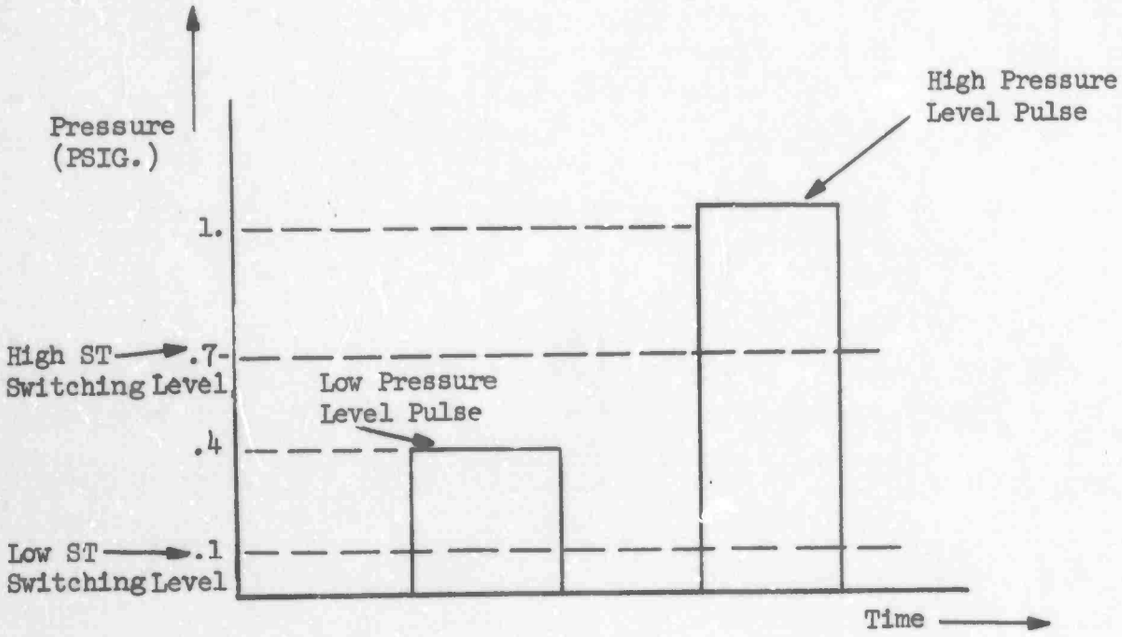

Figure 2. Schmitt Trigger Switching Levels and Pulse Levels Required for Correct Pulse Reception in the PAM System

Trigger[1] can be adjusted from .005 to .7 psig, the switching levels of the two Schmitt Triggers could not differ by more than approximately .7 psig Schmitt Trigger switching levels of .1 and .7 psig were assumed in Figure 2 to demonstrate the allowable changes in pulse pressure levels and Schmitt Trigger switching levels. The low level pulse pressure was set to the midpoint of the switching levels while the high level pulse pressure was set above the upper switching level. As can be seen in Figure 2, any change between the low level pulse pressure and the switching levels exceeding .3 psig would cause false triggering. False triggering would also result if the high level pulse pressure fell below the upper switching level. However the former cause of false triggering determined the maximum allowable ranges in supply pressures.

For the pressure tests[2], the two Schmitt Triggers were adjusted to provide a maximum difference between the switching levels. Restrictors were used on the AND gates' supply ports to adjust the pulse pressure levels to the correct positions with respect to the ST switching levels. These initial adjustments were made with the system supply pressure at 6 psig. When the supply pressures on the transmitter and the receiver were equal, correct system operation was maintained over a supply pressure range of 4 to 8 psig. When the supply pressure at the transmitter was held at 6 psig and that at the receiver varied and then vice versa, system operation was maintained over a range of 2 psig (5 to 7 psig).

2. Temperature Test

a. Setup

For the temperature tests, the receiver was placed in an Associated Testing Laboratories Temperature Chamber, Model SLHU-ILC-I. The power and signal tubes, along with two $\frac{1}{4}$" ID bleed tubes, were fed through

---

[1] During the temperature tests, a Schmitt Trigger was made from two proportional amplifiers and a flip-flop. In comparison to the standard or integrated Schmitt Trigger, this Schmitt could be triggered with a wider range of pulse amplitudes. However, the standard components were used for the pressure tests.

[2] Available pressure gauges could not be used to measure pressures accurately below 1 psig.

a putty-filled hole in the chamber. The two bleed tubes were used to allow the supply air to escape from the chamber. During these tests, the temperature was raised and lowered to the limits of the system and the chamber, respectively. Six basic tests were performed. Some of these were repeated more than once. The parameters for these tests, including the duration at prescribed temperatures, power supply pressures, the use of filters, and the location of the power and signal tubing, are listed in Table 1. During the temperature tests, system operation was defined as transmitting and receiving a series of words, which are listed in Table 2. In this table, the bits are labeled from A to D and the X signifies that the bit is in the "1" state. Honeywell indicators (Corning Glass No. 191485) were used to show the binary state of the receiver shift registers while the outputs of the Schmitt Triggers were monitored with two steady-state pressure gauges.

b. TEST 1 - In the first test, 45 feet of the receiver power supply tube and 45 feet of the information transmission tube were in the chamber; no filters were used on the shop supply air; and each cold temperature was held for only five minutes. After -55°C was reached, it was held until the system failed to operate after 15 minutes. Much frost was visible in and on the tubing, and on the components. Some component bleed ports were completely plugged.

c. TEST 2 - The second test was like the first, except the discrete test temperatures were held longer. After 5 minutes at -35°C, frost could be seen on the system and its operation was stopped. This failure at -35°C, rather than -55°C as in Test 1, indicated that the longer time at the higher temperatures increased the frost and caused the higher temperature failure.

d. TEST 3 - This test had the same setup as Tests 1 and 2 except high temperatures were used. Two tests were run. The first test resulted in failure at around 70°C. The tubing became soft; it expanded and was blown from the hose fittings on the manifold. Tubing, which was bent at sharp angles, collapsed and became blocked. For the second test, all the sharp angles were removed from the tubing. However, the tubing was again

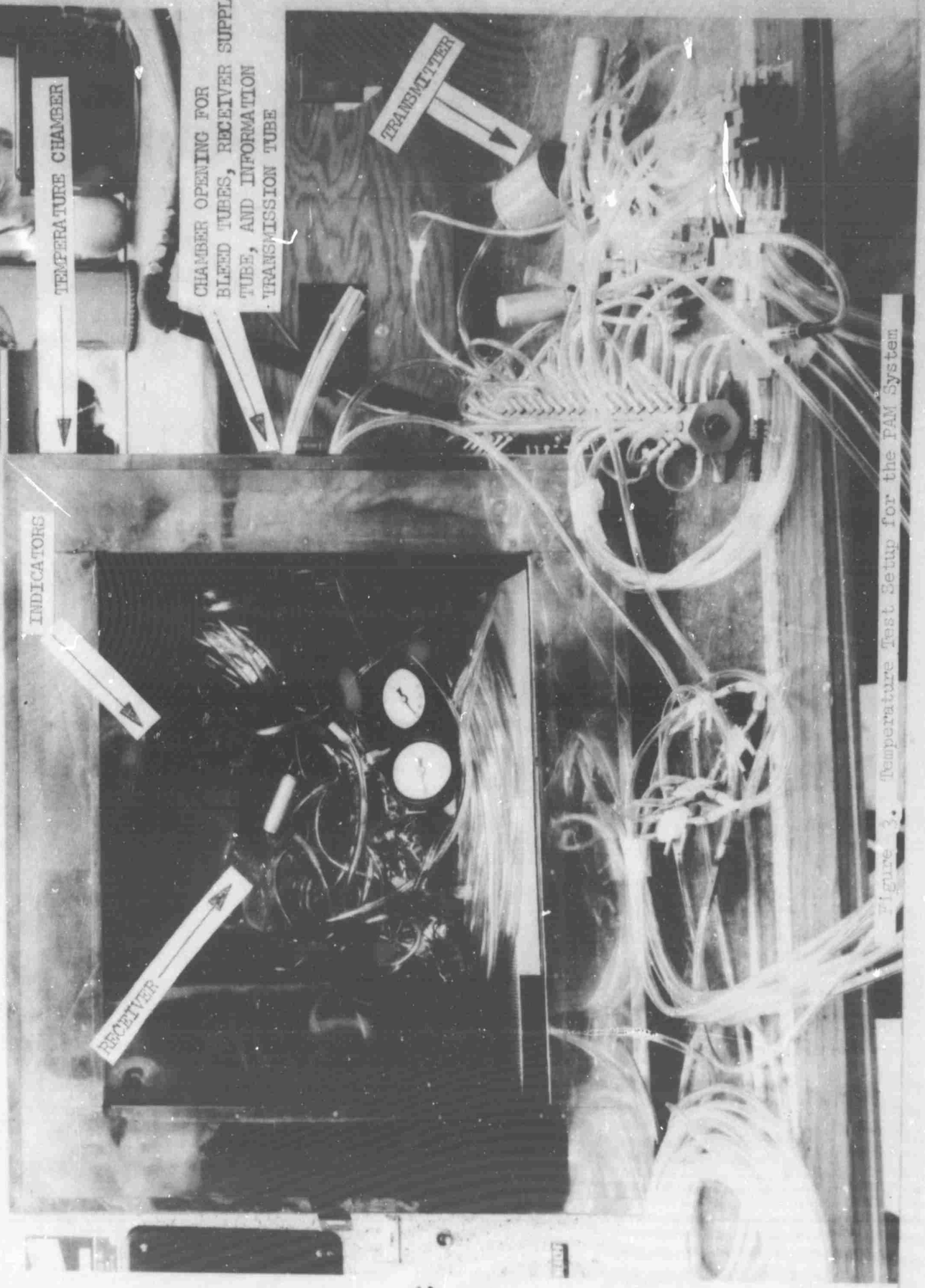

Figure 3. Temperature Test Setup for the PAM System

Table 1 Temperature Test Setups

PARAMETERS \ $T_{E_{S_{T_S}}}$	1	2	3	4	5	6
45 FT. Receiver Power Tubing In Chamber	YES	YES	YES	YES	NO	YES
45 Ft. Signal Tubing in Chamber	YES	YES	YES	YES	NO	YES
Receiver Manifold Pressure (PSIG)	5	6	6	5	5	5
Transmitter Manifold Pressure (PSIG)	6	6	6	5	5	5
Filters on Power Supplies	NO	NO	NO	YES	YES	YES
Temp Held For 5 Min(°C)	-15,-25. -35,-45	-35	30,40		-5, -15	
Temp Held For 10 Min(°C)		25,15,&5	50,60,70		-25	-87
Temp Held For 15 Min(°C)	-55					-55
Temp Held For 20 Min(°C)		-5,-15 -25		-35,-45 -55		-73

Table 2 Definition of System Operation

WORD \ BIT	A	B	C	D	No. of Word Transmissions
1				X	2
2			X		2
3		X			2
4	X				2
5			X	X	2
6	X	X			2
7	X	X	X		1
8		X	X	X	1
9	X	X	X	X	4

blown from the supply manifold at around 70°C.

e. TEST 4 - The five micron power supply filters were added for this and the remaining tests. The system was operated at -35°C and -45°C for 20 minutes each and failed after 21 minutes at -55°C. The amount of frost was decreased considerably from Tests 1 and 2 in which the filters were not used. The longer operation at the lower temperatures suggests that the removal of moisture from the supply air by means of a filter will eliminate failures resulting from low temperatures.

f. TEST 5 - Test 5 was similar to 4; however, most of the long 45-foot lengths of the receiver power supply tube and the information transmission tube were removed from the chamber. After only 10 minutes at -25°C, the Schmitt Triggers failed to switch. Two more tests gave the same results. Frost was not visible on the components during these tests. However, since the hot air condenses directly on the components, and not in the tubes as in previous tests, frost was highly suspected as the cause of failure.

g. TEST 6 - For this test, the 45-foot length of the power supply tube was replaced in the chamber, leaving the 45-foot length of transmission tube outside the chamber. The temperature was set to -55°C and -73°C for 15 and 20 minutes, respectively. Both runs resulted in normal system operation. The temperature chamber was lowered to its minimum temperature, -87°C, and the system operated for 10 minutes before errors were observed.

h. Schmitt Trigger Failure - After Tests 2, 4, and 5, the Schmitt Triggers failed to operate after the frost was eliminated. The cause of failure was presumed to be dirt particles from the supply air. The components were cleaned ultrasonically and normal operation was restored.

APPENDIX A

SCHEMATICS OF BREADBOARD MODELS

NOTES:

1. RESTRICTORS (R) ARE AIR FLOW LIMITING DEVICES. THE THE SLANTED ARROW REPRESENTS A VARIABLE RESTRICTOR.
2. CAPACITORS (CAP) ARE SEALED EMPTY CANS WITH TWO ATT
3. DELAY LINES WITH NO CAPACITOR SYMBOL ARE LENGTHS OF
4. 10 IN³ REFERS TO THE VOLUME OF THIS CAPACITOR. ALL LENGTHS OF FLUIDONICS CAPACITORS.
5. SEE APPENDIX C FOR COMPONENT SYMBOLS AND DEFINITI

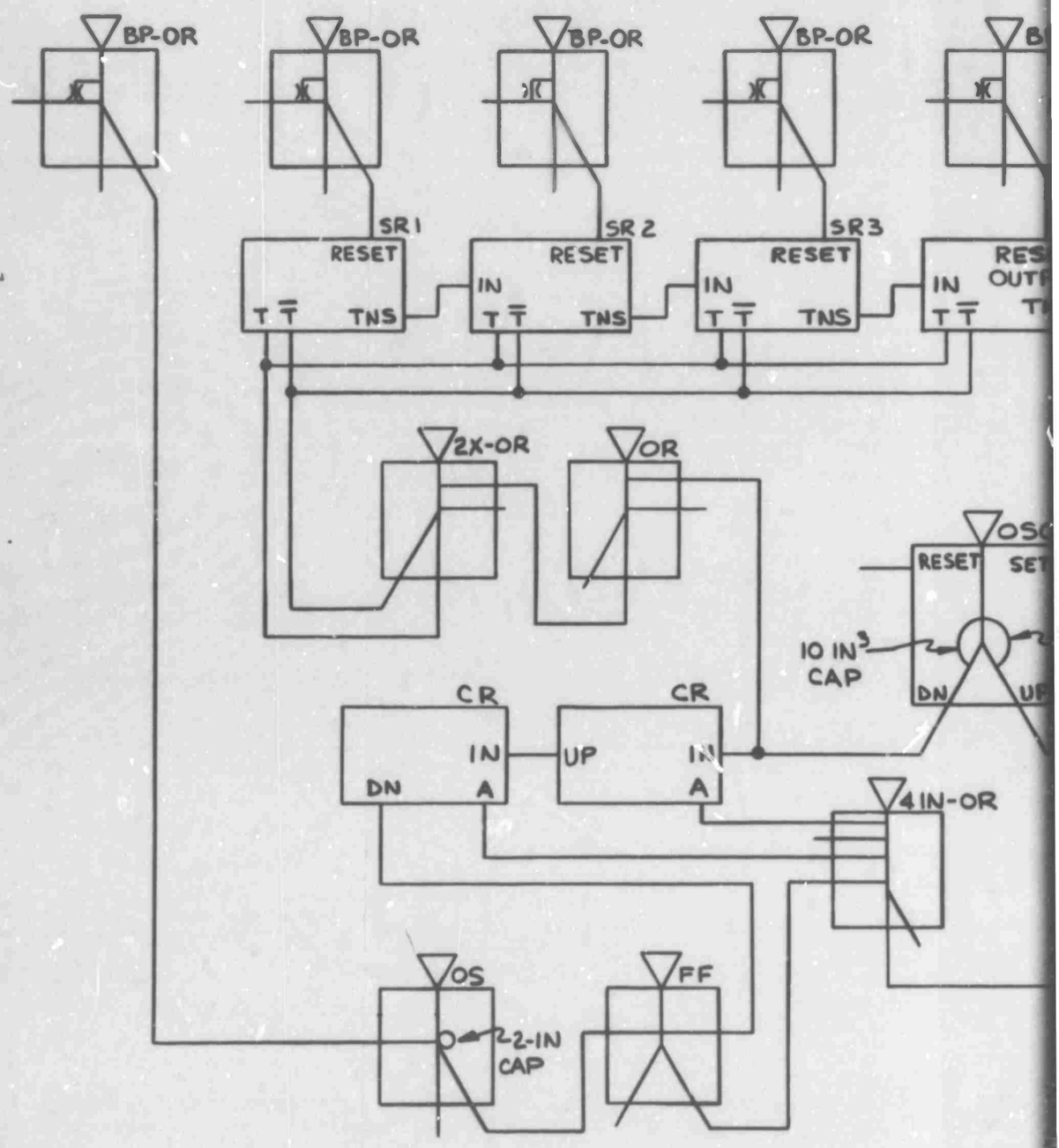

FIG. A-1 PULSE AMPLITUDE MODULATION

ING DEVICES. THEY ARE REPRESENTED BY; OR . THE SYMBOL WITH
IABLE RESTRICTOR.

CANS WITH TWO ATTACHED HOSE FITTINGS. THESE CANS WERE USED AS DELAY LINES.

OL ARE LENGTHS OF PLASTIC TUBING.

S CAPACITOR. ALL OTHER CAPACITOR DESIGNATIONS (1, 2, & 3 IN) REFER TO

BOLS AND DEFINITIONS.

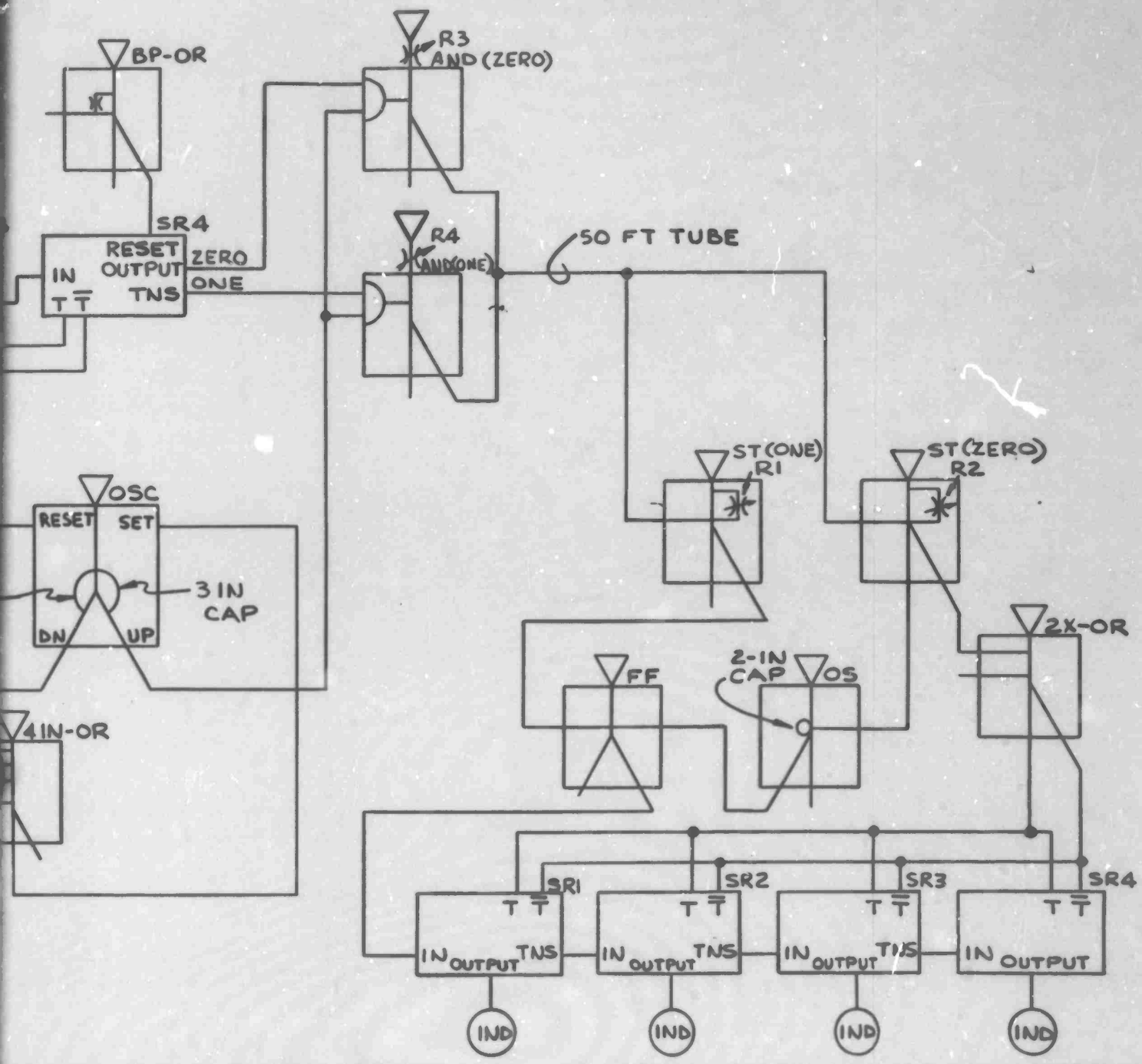

ODULATION SYSTEM

B

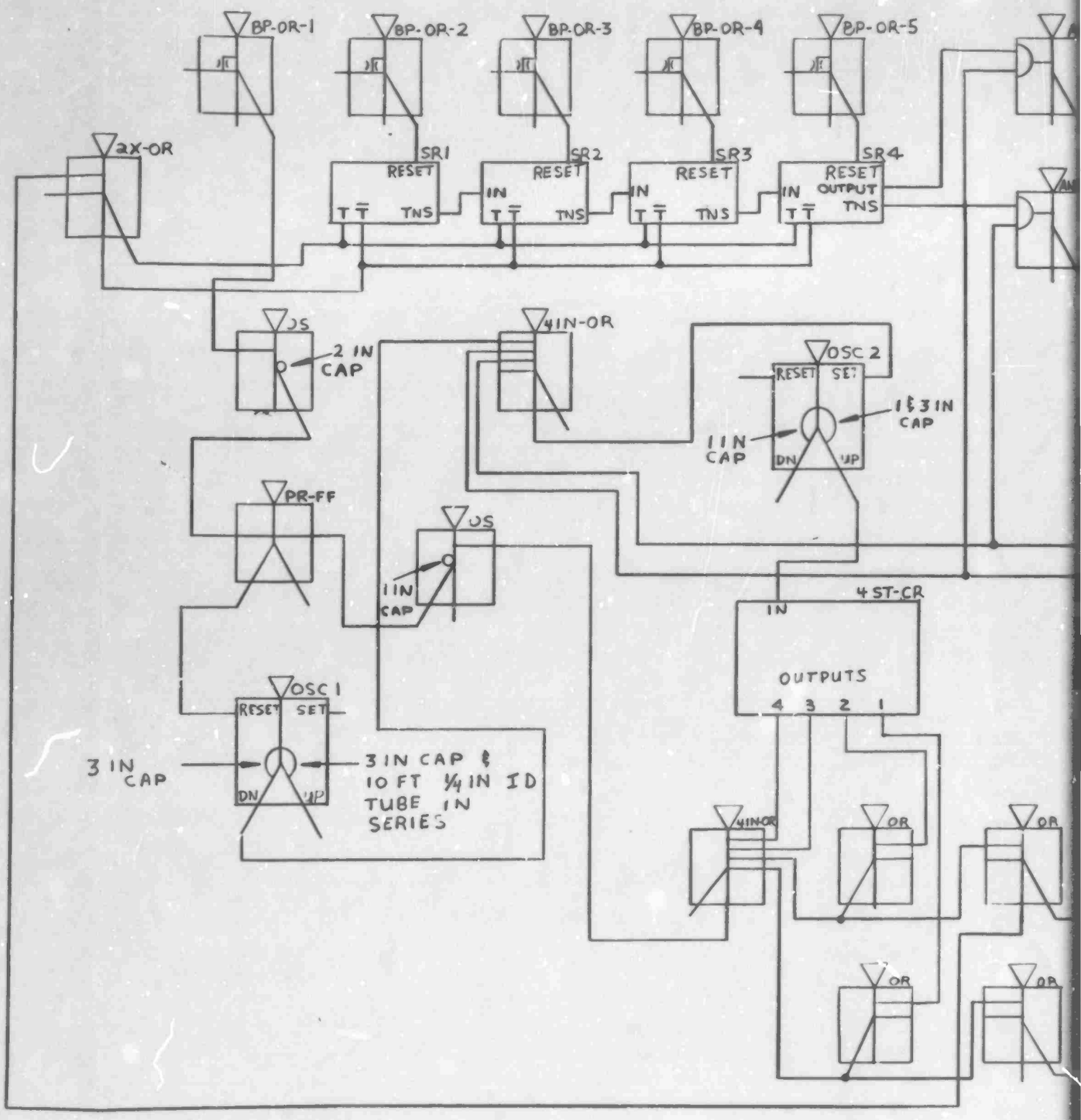

FIG. A-2 PULSE COUNT MODULATION SYSTEM

NOTES:

1. RESTRICTORS (R) ARE AIR FLOW LIMITING DEVICES. THEY ARE REPRESENTED BY: OR . THE SYMBOL WITH THE SLANTED ARROW REPRESENTS A VARIABLE RESTRICTOR.
2. CAPACITORS (CAP) ARE SEALED EMPTY CANS WITH TWO ATTACHED HOSE FITTINGS. THESE CANS WERE USED AS DELAY LINES.
3. DELAY LINES WITH NO CAPACITOR SYMBOL ARE LENGTHS OF PLASTIC TUBING.
4. 10 IN³ REFERS TO THE VOLUME OF THIS CAPACITOR. ALL OTHER CAPACITOR DESIGNATIONS (1, 2, & 3 IN) REFER TO LENGTHS OF FLUIDONICS CAPACITORS.
5. SEE APPENDIX C.3 FOR COMPONENT SYMBOLS AND DEFINITIONS.

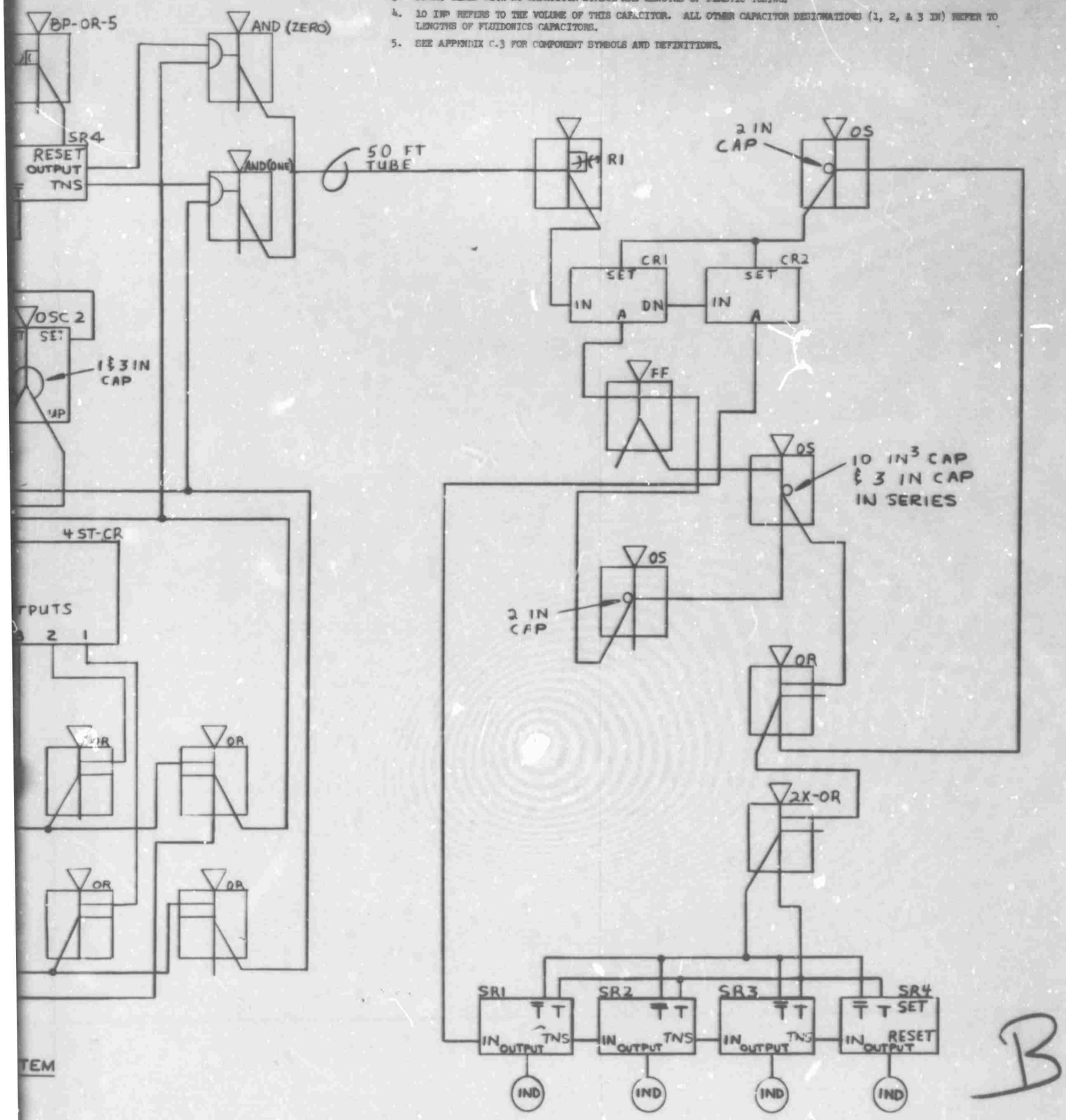

B

NOTES:

1. RESTRICTORS (
WITH THE SLAN
2. CAPACITORS (C
3. DELAY LINES W
4. 10 IN REFERS
LENGTHS OF FL
5. SEE APPENDIX

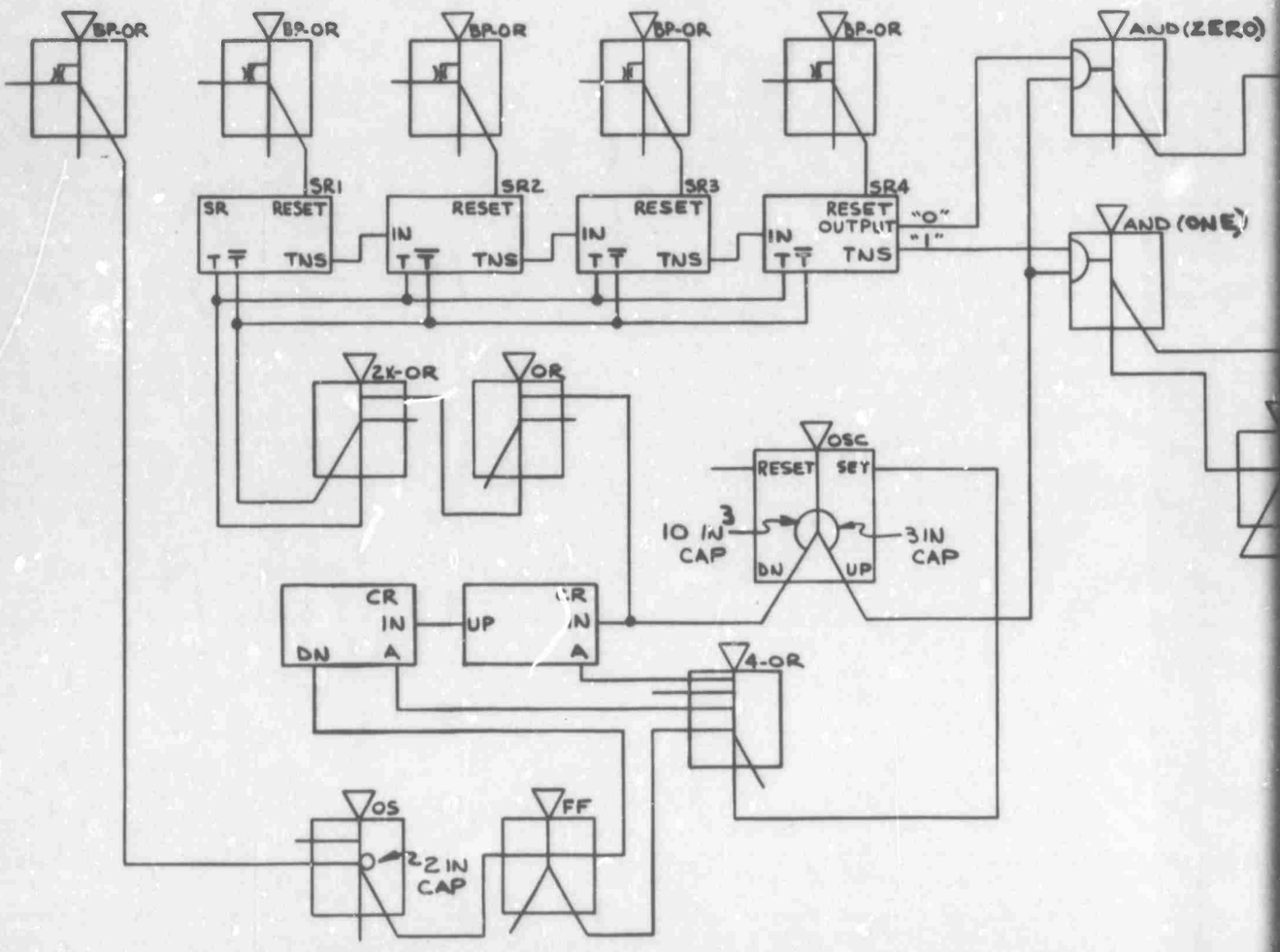

FIG. A-3 PULSE WIDTH MODULATION

NAFI TR-1235

ES:

1. RESTRICTORS (R) ARE AIR FLOW LIMITING DEVICES. THEY ARE REPRESENTED BY; OR . THE SYMBOL WITH THE SLANTED ARROW REPRESENTS A VARIABLE RESTRICTOR.
2. CAPACITORS (CAP) ARE SEALED EMPTY CANS WITH TWO ATTACHED HOSE FITTINGS. THESE CANS WERE USED AS DELAY LINES.
3. DELAY LINES WITH NO CAPACITOR SYMBOL ARE LENGTHS OF PLASTIC TUBING.
4. 10 IN REFERS TO THE VOLUME OF THIS CAPACITOR. ALL OTHER CAPACITOR DESIGNATIONS (1, 2, & 3 IN) REFER TO LENGTHS OF FLUIDONICS CAPACITORS.
5. SEE APPENDIX C FOR COMPONENT SYMBOLS AND DEFINITIONS.

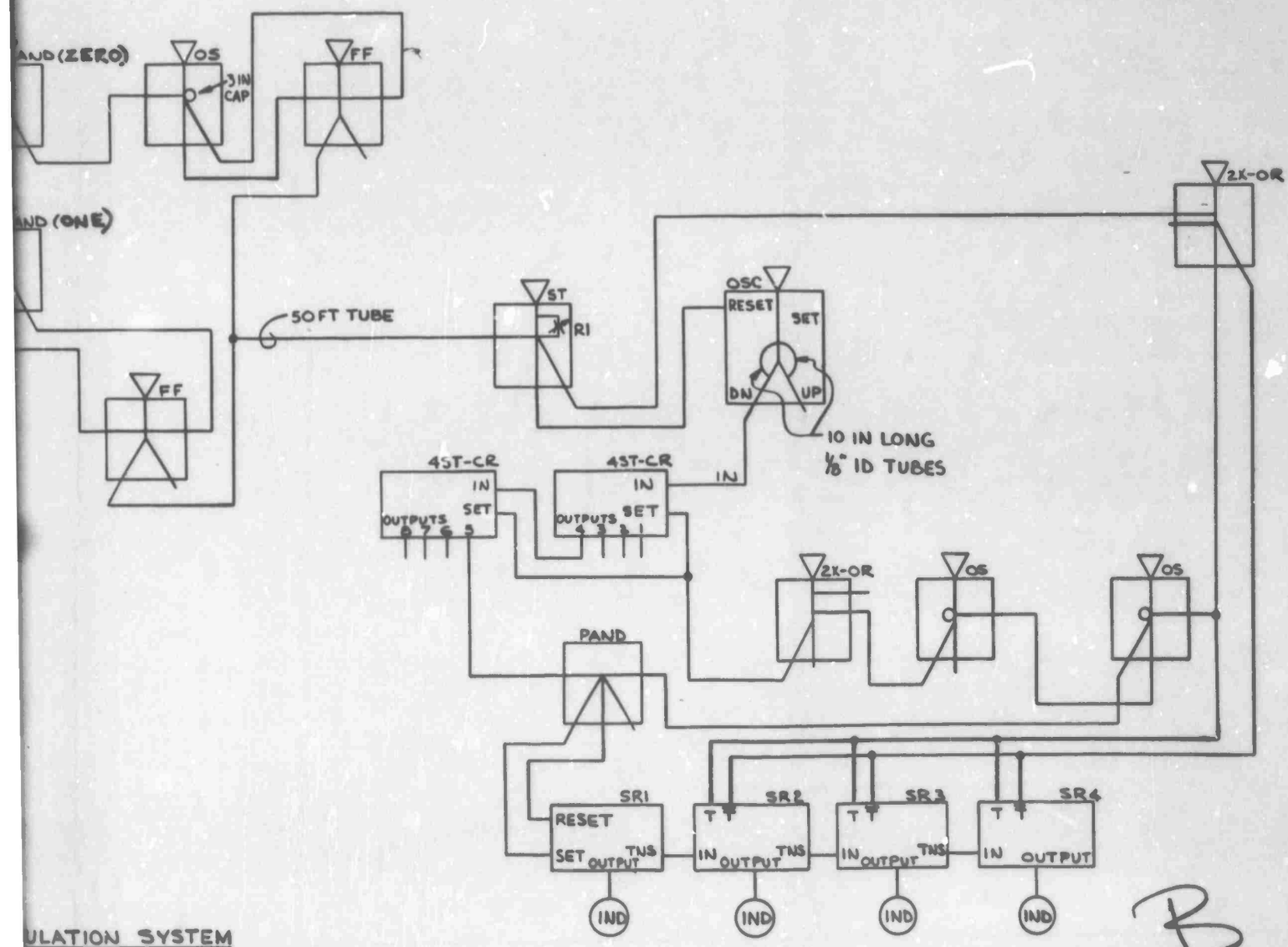

ULATION SYSTEM

B

APPENDIX B - PARTS LIST

PARTS	ABBREVIATION	SOURCE	PART NO.
OR/NOR	OR	Corning Glass	190815
Schmitt Trigger	ST	Corning Glass	190462
Oscillator	OSC	Corning Glass	191439
2X OR/NOR	2X-OR	Corning Glass	190981
One Shot Multivibrator	OS	Corning Glass	190985
Shift Register Stage	SR	Corning Glass	190948
Passive AND	PAND	Corning Glass	190196
4-Stage Counter	4ST-CR	Corning Glass	190492
AND	AND	Corning Glass	190814
Flip-Flop	FF	Corning Glass	190415
4 Input OR/NOR	4 IN-OR	Corning Glass	190582
1-Stage Up/Down Counter	CR	Corning Glass	190999
Back-Pressure Switch	BP-OR	Corning Glass	191473
1-4 Fan-out (or Power Jet Manifold		Corning Glass	191642
Filter Regulator (5 micron)		Corning Glass	191481
Variable Restrictor	R	Corning Glass	191484
Capacitors	CAP	Fluidonics, Inc.	
1-IN			300188
2-IN			300189
3-IN			300190
Tubing		Tamco Plastic Supplies	Vinyl Plastic ID $\frac{1}{4}$"
Tubing		Tamco Plastic Supplies	Vinyl Plastic ID 1/8"
Preferenced Flip-Flop	PR-FF	Corning Glass	190162
Indicator	IND	Honeywell	1NF1

APPENDIX C - COMPONENT DESCRIPTIONS

I. TERMS

A. Logic Symbols used in the component descriptions are "•" for the AND function, "+" for the OR function, and a bar "–" for the inverse function.

B. Signals to the component inputs or from the component outputs are air signals. The absence of a signal implies that the air pressure at the input or output port is the same as the ambient air pressure. The presence of a signal implies that the air pressure at the input and the output ports is greater than the ambient air pressure. The presence of a signal also implies the input pressure signal is suitable for correct component operation and the output pressure signal is characteristic of correct component operation.

C. On and off signals are defined as the presence and absence of a signal, respectively.

D. Impedance is pressure divided by flow.

II. COMPONENTS

The components described in this Appendix are:

A. OR/NOR Gate

1. Standard OR/NOR Gate (OR)
2. Four input OR/NOR Gate (4 IN-OR)
3. Backpressure OR/NOR Gate (BP-OR)
4. 2X OR/NOR Gate (2X-OR)

B. Flip-Flop (Bistable component)

1. Standard Flip-Flop (FF)
2. Preferenced Flip-Flop (PR-FF)
3. 2X Flip-Flop (2X-FF)

C. AND Gate

1. Active AND (AND)
2. Passive AND (PAND)

D. One Shot Multivibrator (OS)

E. Schmitt Trigger (ST)

F. Oscillator (OSC)

G. Counter

1. Single Stage Counter (CR)
2. Four Stage Counter (4 ST-CR)

H. Single Stage Shift Register (SR)

A. OR/NOR Gate

1. Standard OR/NOR Gate (OR)

The symbol for this gate is shown in Figure C-1. In the absence of a signal at input A or B, an air jet flows from the supply port through a passage to the $\overline{A} \cdot \overline{B}$ or NOR output port. If a control signal is applied to either or both inputs (A and B), the air jet switches from the $\overline{A} \cdot \overline{B}$ port to the A + B or OR output port. If all control signals are withdrawn the air jet returns to the $\overline{A} \cdot \overline{B}$ port. A truth table for the standard OR/NOR gate is also given in Figure C-1. The absence or presence of a signal at the ports listed in the upper row is signified by a 0 or a 1.

2. Four Input OR/NOR Gate (4 IN-OR)

This gate operates like the standard OR/NOR gate with the addition of two inputs. If the input signals are A, B, C, and D, the OR output would become A+B+C+D and the NOR output would become $\overline{A} \cdot \overline{B} \cdot \overline{C} \cdot \overline{D}$.

3. Backpressure OR/NOR Gate (BP-OR)

See Figure C-2. The input signal for the backpressure OR/NOR gate is obtained by blocking the input control port A. With input port A open, air flows from the supply port (SP) through a passage to output port $\overline{A}$. A small signal is tapped from the supply air through the restrictor and bled out through input port A. When input port A is blocked or closed, the small signal is forced back against the supply jet and causes the latter to switch to output port A. When input port A is opened, the output signal

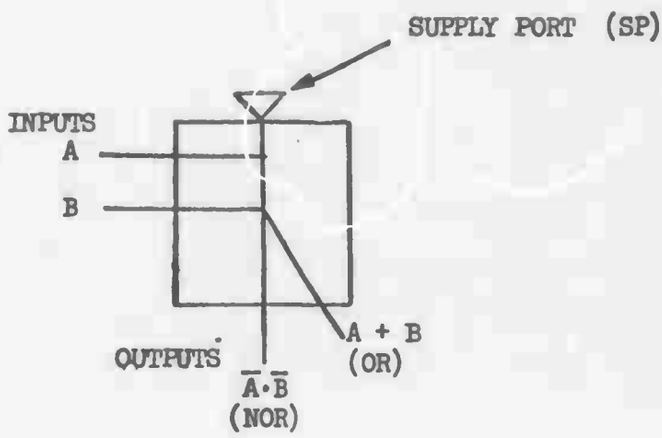

A	B	A+B	$\overline{A}\cdot\overline{B}$
0	0	0	1
1	0	1	0
0	1	1	0
1	1	1	0

1 → ON
0 → OFF

Figure C - 1. Standard OR/NOR Gate and Truth Table

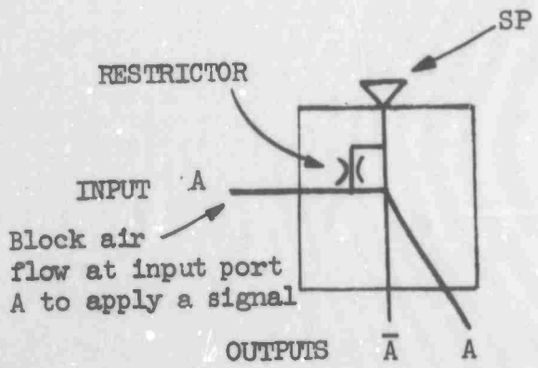

Figure C - 2. Back Pressure OR/NOR Gate.

switches back to output port $\overline{A}$.

4. 2X OR/NOR Gate (2X-OR)

The 2X OR/NOR gate is a larger version of the standard OR/NOR gate. It was used in applications where the fanout of the standard OR/NOR gate was inadequate.

B. Flip-Flop (Bistable)

The flip-flop symbol is shown in Figure C-3 along with the truth table for the flip-flop.

1. Standard Flip-Flop (FF)

When supply air is connected to the standard flip-flop, air flows from the supply port through a passage to either output K1 or output K2. If, initially, the output signal is present at K1, a signal applied to input A will switch the output signal from K1 to K2. If the signal is withdrawn from input A, the signal will remain at K2. Similarly a signal applied to input B will switch the output signal from K2 to K1 and the output signal will remain at K1 until a signal is applied at input A.

2. Preferenced Flip-Flop (PR-FF)

The preferenced flip-flop operates like the standard flip-flop except that when supply air is initially connected, the output signal is constrained to a particular output. The preferred output is marked by an asterik in Figure C-3.

3. 2X Flip-Flop (2X-FF)

The 2X flip-flop is a larger version of the standard flip-flop and is used in applications where the fan out of the standard device is inadequate.

C. AND Gate

1. Active AND Gate (AND)

The symbol and the truth table for the active AND gate is shown in Figure C-4. This AND gate is termed active because it requires supply air. When signals are present at both inputs A and B, an output signal

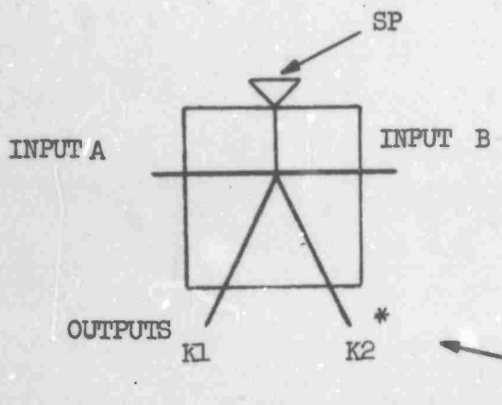

A	B	K1	K2
1	0	0	1
0	0	0	1
0	1	1	0
0	0	1	0

1 → ON
0 → OFF

Figure C - 3. Flip-Flop (Bistable) and Truth Table

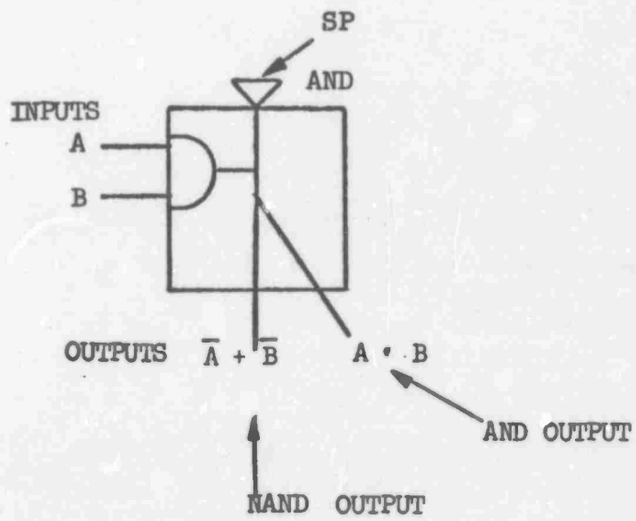

A	B	$A \cdot B$	$\overline{A}+\overline{B}$
0	0	0	1
1	0	0	1
0	1	0	1
1	1	1	0

1 → ON
0 → OFF

Figure C - 4. Active AND Gate and Truth Table

is present at $A \cdot B$ (AND output). Any other input signal conditions will result in the presence of a signal at output $\overline{A} + \overline{B}$ (NAND output). The $A \cdot B$ port output signal is the inverse of the $\overline{A} + \overline{B}$ output signal.

2. Passive AND Gate (PAND)

The symbol and the truth table for the passive AND gate are shown in Figure C-5. This gate requires no supply air. As in the active AND gate, a signal is obtained at output $A \cdot B$ if signals are present at inputs A and B.

Besides the AND function $A \cdot B$, this gate provides the two terms of the EXCLUSIVE OR function ($\overline{A} \cdot B$ and $A \cdot \overline{B}$). The EXCLUSIVE OR function is $F = \overline{A} \cdot B + A \cdot \overline{B}$. If a signal is present at either input A or B, but not both, an output signal will be obtained at $A\overline{B}$ or $\overline{A}B$, respectively.

D. One Shot Multivibrator (OS)

The symbol for the one shot multivibrator along with a sketch of the input and output signals is shown in Figure C-6. When a signal is first applied to input A, the output signal switches from output K2 to K1. A portion of the input signal is fed through a delay line and returned to oppose the input signal. When the opposing signal balances the input signal, the output signal returns to K2 from K1. The time (T) the signal is on at output K1 is determined by the length of the delay line unless the input signal at A is less than T. In this case the output signal at K2 follows the input at A.

E. Schmitt Trigger (ST)

The Schmitt Trigger is an OR/NOR gate with an adjustable input signal level. That is, the pressure required at input A (See Figure C-7) to switch the output signal from K1 to K2 may be changed while the supply air pressure remains constant.

A signal from the air supply is controlled by a variable restrictor and directed to oppose the input signal at A. To switch the output signal, the input signal at A must overcome the opposing signal. Varying the restrictor impedance varies the opposing signal and thus changes the required signal.

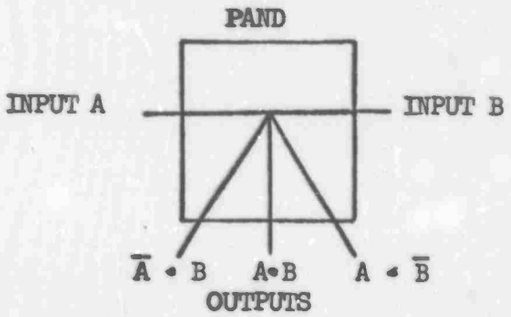

A	B	$A \cdot B$	$\bar{A} \cdot B$	$A \cdot \bar{B}$
0	0	0	0	0
1	0	0	0	1
0	1	0	1	0
1	1	1	0	0

1 → ON
0 → OFF

Figure C - 5. Passive AND Gate and Truth Table

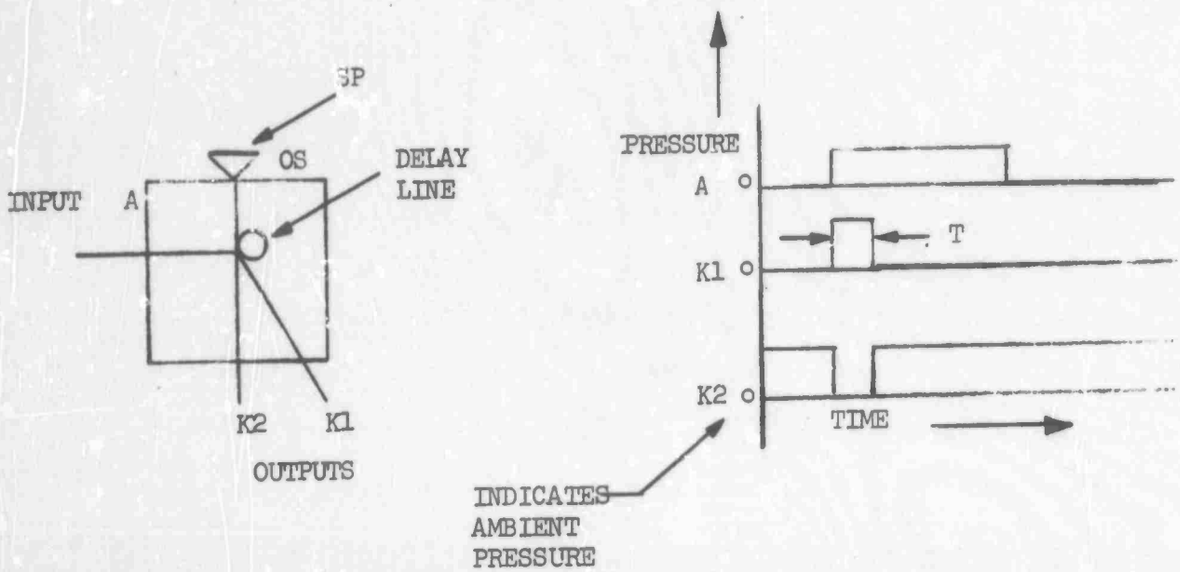

Figure C - 6. One Shot Multivibrator and Signal Characteristics

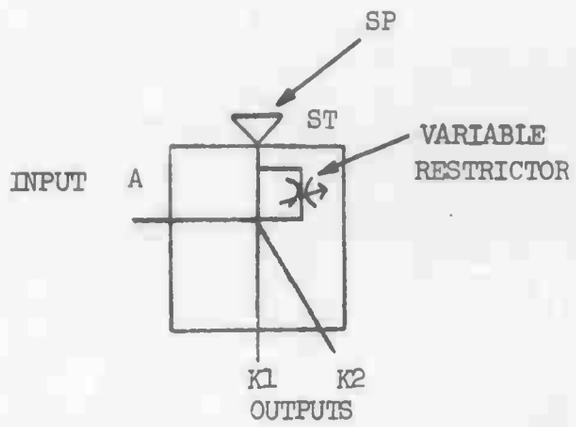

Figure C - 7. Schmitt Trigger

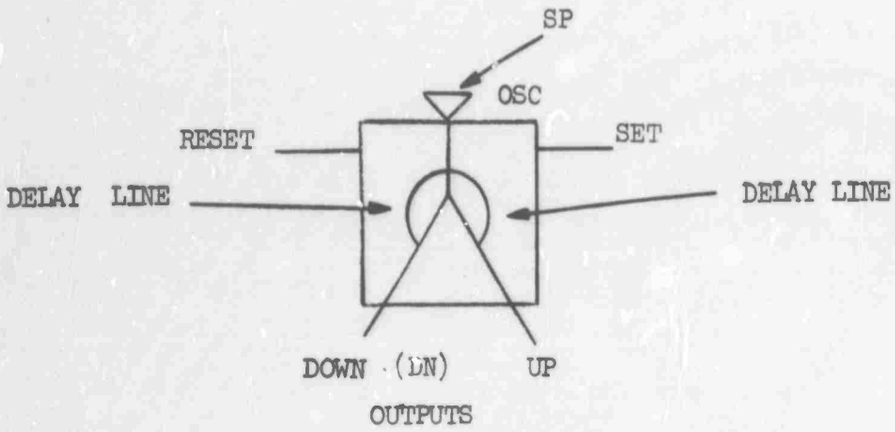

Figure C - 8. Oscillator

level at input A.

F. Oscillator (OSC)

The symbol for the oscillator is given in Figure C-8. The oscillator is a flip flop with delayed feedback signals from both output ports. When the signal is present at the UP output, a portion of this output signal is sent through a delay line and applied to switch the output signal from UP to DOWN. The output signal is similarly returned to UP with a feedback signal from the DOWN output signal. Oscillations can be stopped by applying a signal at the SET and RESET inputs. This will hold the output signal at DOWN and UP respectively.

G. Counter

1. UP/DOWN Counter (CR)

The symbol [1] and the truth table for the UP/DOWN counter are given in Figure C-9. Output signals at $\overline{A}$ and UP are coincident and inverted to the coincident signals at A and DN. A signal applied at the IN input will shift the output signals from $\overline{A}$ and UP to $\overline{A}$ and DN or vice versa, depending on which output signals were on.

The UP/DOWN counter can be staged to make a counter like the following four stage counter.

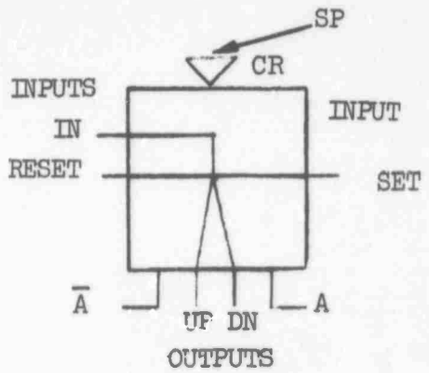

IN	SET	RESET	$\overline{A}$ & UP	A & DN
0	0	0	1 or 0	0 or 1
0	0	1	0	1
0	1	0	1	0
1	0	0	0	1
0	0	0	0	1
1	0	0	1	0
0	0	0	1	0

Figure C-9. Up/Down Counter and Truth Table [1]

[1] This symbol was not used in the schematics in Appendix A. Instead, a rectangle was used and the ports were labeled according to this symbol.

2. Four Stage Binary Counter (4 ST-CR)

The four stage binary counter was represented by a rectangle with labeled input and output ports. See Figure C-10. Pulse signals applied to the IN input cause the output signal conditions shown in Figure C-10. The 0 or 1 state implies that the signal at the particular output port is off or on.

Applying a signal at the SET input will cause all output signals to be off.

H. Single Stage Shift Register (SR)

The fluidic schematic for the single stage shift register is given in Figure C-11. In the schematics in Appendix A, the shift register was symbolized by a rectangle. The ports on this rectangle correspond to the ports in Figure C-11.

The shift register stage detects the signal state (either on or off) of an amplifier at a particular time and stores this information permanently.

The signal to be detected is applied at the IN input port. When the state of this signal is to be stored, a signal pulse is required at the $\overline{T}$ input port followed by a signal pulse at the T input port. These pulses at $\overline{T}$ and T are frequently referred to as clock pulses. When a clock pulse is applied at $\overline{T}$, the output signal from flip-flop 1 (FF1) is obtained at output 02 if the signal is on at the IN port and at 01 if the IN signal is off. When a clock pulse is applied at input T, the output signal from flip-flop 2 (FF2) is obtained at the TO NEXT STAGE (TNS) output if the signal is on at output 02 and at OUTPUT (0) if the signal at 02 is off.

The output signal at the TNS port will coincide with the input signal at the IN port when the clock pulses at $\overline{T}$ and T are applied as stated.

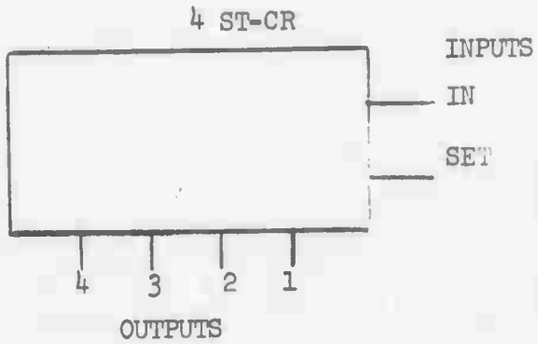

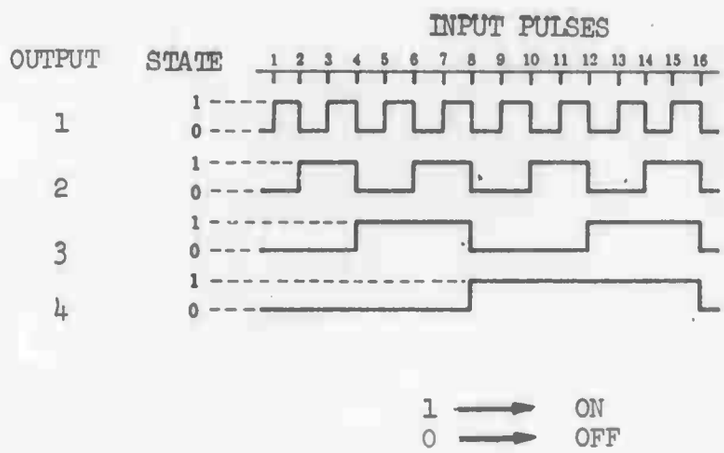

Figure C - 10. Four Stage Counter and Output Waveforms

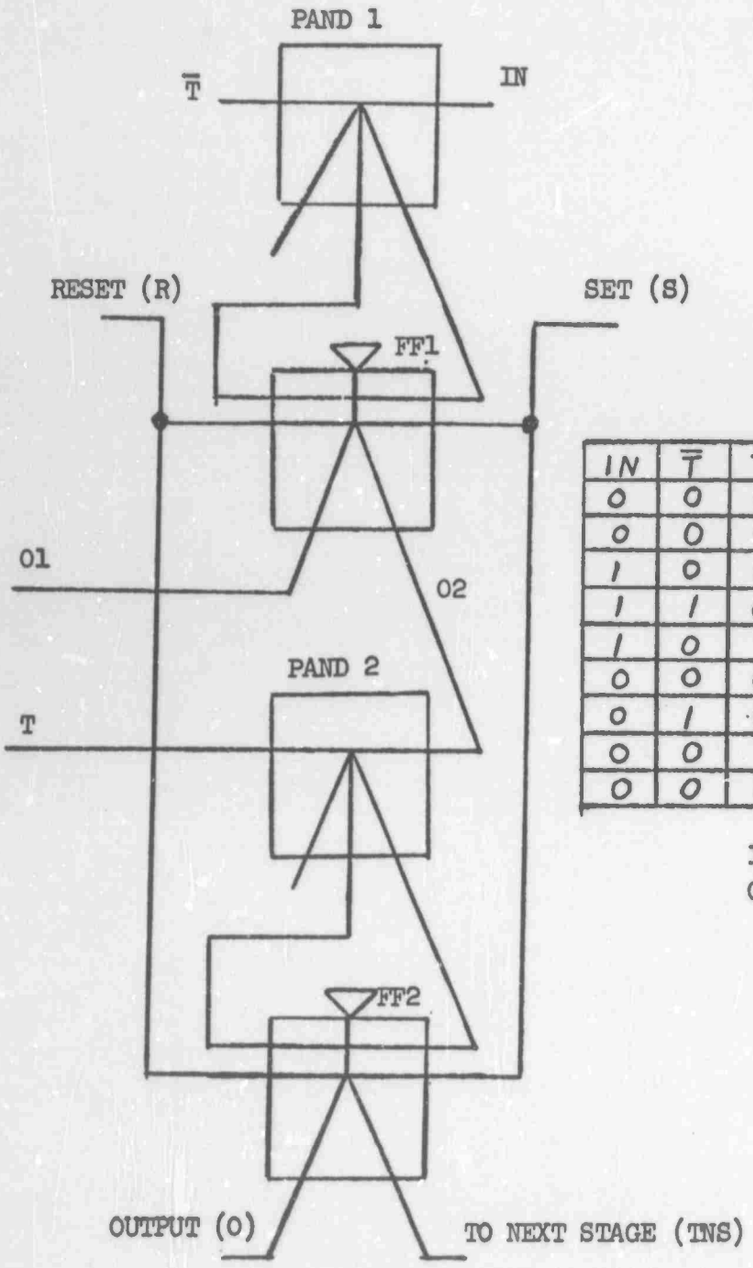

IN	$\overline{T}$	T	R	S	TNS	O	O1
0	0	0	0	1	0	1	1
0	0	0	1	0	1	0	0
1	0	0	0	0	1	0	0
1	1	0	0	0	1	0	0
1	0	1	0	0	1	0	0
0	0	0	0	0	1	0	0
0	1	0	0	0	1	0	1
0	0	1	0	0	0	1	1
0	0	0	0	0	0	1	1

1 → ON
0 → OFF

FIGURE C-11. Single Stage Shift Register and Truth Table

UNCLASSIFIED
Security Classification

DOCUMENT CONTROL DATA - R&D

(Security classification of title, body of abstract and indexing annotation must be entered when the overall report is classified)

1. ORIGINATING ACTIVITY *(Corporate author)* Naval Avionics Facility Indianapolis, Indiana 46218	2a. REPORT SECURITY CLASSIFICATION UNCLASSIFIED 2b. GROUP

3. REPORT TITLE

A DESCRIPTIVE NOTES *(Type of report and inclusive dates)*

NAFI TR-1235

5. AUTHOR(S) *(Last name, first name, initial)*

ZIMMERMAN, Larry F.

6. REPORT DATE 9 August 1968	7a. TOTAL NO. OF PAGES 22	7b. NO. OF REFS
8a. CONTRACT OR GRANT NO. AIRTASK A05510031/2311/A107-00-00, W.U. No. AIR-53211B-7 b. PROJECT NO. c. d.	9a. ORIGINATOR'S REPORT NUMBER(S) NAFI TR-1235 9b. OTHER REPORT NO(S) *(Any other numbers that may be assigned this report)*	

10. AVAILABILITY/LIMITATION NOTICES

Each transmittal of this document outside the agencies of the U.S. Government must have prior approval of Naval Avionics Facility, Indianapolis, Indiana 46218

11. SUPPLEMENTARY NOTES	12. SPONSORING MILITARY ACTIVITY NAVAIRSYSCOM

13. ABSTRACT

This report describes three fluidic breadboards which transmit binary information over a single 50-foot tube by means of pulse amplitude modulation (PAM), pulse count modulation (PCM), and pulse width modulation (PWM). Cursory temperature and pressure tests were run on the pulse amplitude modulated breadboard.

DD FORM 1 JAN 64 1473 0101-807-6800

UNCLASSIFIED
Security Classification