UNCLASSIFIED

AD NUMBER

AD851608

NEW LIMITATION CHANGE

TO

Approved for public release, distribution unlimited

FROM

Distribution authorized to U.S. Gov't. agencies and their contractors; Specific Authority; Sep 68. Other requests shall be referred to Naval Postgraduate School, Monterey, CA 93940.

AUTHORITY

U.S. Naval Postgraduate School ltr., dtd September 23, 1971.

THIS PAGE IS UNCLASSIFIED

AD851608

UNITED STATES NAVAL POSTGRADUATE SCHOOL

THESIS

THE TRANS-DERMA-PHONE -- A RESEARCH DEVICE FOR THE INVESTIGATION OF RADIO-FREQUENCY SOUND STIMULATION

by

Garland Frederick Skinner

D D C
MAY 8 1969
A

September 1968

This document is subject to special export controls and each transmittal to foreign government or foreign nationals may be made only with prior approval of the U. S. Naval Postgraduate School.

Code 023
Monterey Calif 93940

THE TRANS-DERMA-PHONE - A RESEARCH DEVICE FOR THE

INVESTIGATION OF RADIO-FREQUENCY SOUND STIMULATION

by

Garland Frederick Skinner
Lieutenant, United States Navy
B.S.E.E., Virginia Polytechnic Institute, 1960

Submitted in partial fulfillment of the
requirements for the degree of

MASTER OF SCIENCE IN ELECTRICAL ENGINEERING

from the

NAVAL POSTGRADUATE SCHOOL
September, 1968

Signature of Author Garland F. Skinner

Approved by Gerald D. Ewing
Thesis Advisor

Charles B. Oler, acting
Chairman, Department of
Electrical Engineering

R. F. Rinehart
Academic Dean

ABSTRACT

Electrophonic hearing, stimulated by the passing of an audio-frequency current through various electrodes attached to the body, has previously been studied. More recently, transdermal stimulation, a means of electromagnetic excitation utilizing an amplitude-modulated radio-frequency stimulus applied through insulated electrodes, has received attention. Claims of sound transmission directly to the brain via this method have prompted several research efforts. Although most of the results tend to disprove the claims, they have not been conclusive. Further investigation of the transdermal mechanism is warranted. The purpose of this work is to design and construct a device especially for research of transdermal hearing. The TRANS-DERMA-PHONE, an amplitude-modulated, 100 kHz transmitter, is the end product of this endeavor. A complete description of this apparatus is presented in this paper, as well as an introduction to the phenomenon known as transdermal stimulation.

TABLE OF CONTENTS

SECTION		PAGE
1.	Introduction	7
2.	Transdermal Electro-Stimulation a. Input b. TD Apparatus c. TD Stimulus d. Electrode-Body Interface e. Subjective Response	9
3.	The TRANS-DERMA-PHONE a. Design Objectives and General Specifications b. Circuit Description and Operation c. Electrode Description and Construction d. Electrode-Body Impedance e. Response Characteristics f. Word Discrimination Test g. General TRANS-DERMA-PHONE Evaluation	18
4.	Conclusions	37
5.	Bibliography	40
APPENDIX		
A.	Modulator Operation of 3N141 Dual Gate MOSFET	41
B.	Sundry Experimental Procedures	44
C.	Parameter Graphs	48
D.	TRANS-DERMA-PHONE - Physical Description and Operating Instructions	49
E.	Detailed Circuit Diagrams	50

BLANK PAGE

LIST OF ILLUSTRATIONS

FIGURE		PAGE
1.	Transdermal Hearing System	9
2.	The TD Apparatus	10
3.	Example of Stimulus Power Required to Maintain Constant Level at Various Carrier Frequencies	10
4.	Example of Typical Operating Range of Parameters	12
5.	Example of Current Dependency	12
6.	Physical Description of the Ear	15
7.	The TRANS-DERMA-PHONE System	17
8.	TRANS-DERMA-PHONE Block Diagram	20
9.	Sundry Electrodes and Related Accessories	24
10.	Description of Electrode Receptacles	26
11.	Electrode-Body R C Equivalent Circuits	28
12.	Various Electrode-Body Impedances	28
13.	Typical Threshold Response Curve	30
14.	Tabulated Threshold Response Data	31
15.	Word Discrimination Scores	33
16.	Typical Transconductance Curves for 3N141 MOSFET	42
17.	Impedance Synthesis Circuit	44
18.	Trimmer Difference Circuits	45
19.	Word Discrimination Electrode Positions	47
20.	Electrode-Body Capacitance, Current Graphs	48
21.	Front Panel View of TRANS-DERMA-PHONE	49
22.	Back Face of TRANS-DERMA-PHONE Chassis	54
23.	Complete Circuitry	56
24.	Circuitry External to Plug in Circuit Board	57
25.	Power Distribution Circuit	58

ACKNOWLEDGEMENTS

The author wishes to thank LT James Rauth and LT William Shoemaker for their assistance in evaluating the general characteristics of the TRANS-DERMA-PHONE. Additional appreciation is extended to LT Rauth who, patiently day after day during the course of this endeavor, acted as a sounding board for many wild ideas. Without his opinions, many more "dead-end streets" would have been encountered.

A vote of thanks is also given to my advisors, Dr. Burl Gray of the Monterey Institute of Speech and Hearing and Dr. Gerald Ewing of the Naval Postgraduate School, who provided guidance and encouragement and displayed an infinite amount of patience.

To my nimble-fingered wife, Myra, and her trusty typewriter I am indeed indebted. A special thank you to her for devotion above the call of duty.

1. INTRODUCTION

The search for new methods of communication between human beings is an ever continuing process in more than one field of endeavor. Musicians, speech theraphists and communications engineers alike are extremely interested in "getting the message across." From the smoke signals of ancient tribes to todays sophisticated radio systems, techniques of man-to-man conversation comprise a broad and varied assortment.

Not among the newest of these means, by which the conveyance of ideas has been attempted, is the technique referred to as electro-stimulation. As a matter of fact, the well known scientist, Volta, experimented with direct currents through the human body as a possible means of communication as early as 1800.[1]

Since that time a great deal of work has been done in the field of electro-stimulation. Various methods have been tried, such as passing an audio-frequency current through the head[2] and the application of electrical pulses to the skin.[3] Each of these methods, as was typical of the various other attempted techniques, had severe limitations. Current levels were critical insofar as thresholds of sensation and pain were concerned, and word discrimination proved to be poor in most cases.[4]

One of the latest attempts to communicate by electro-stimulation has been a method sometimes referred to as transdermal electro-stimulation. This technique, which employs an amplitude-modulated radio-frequency signal coupled to the head by insulated electrodes, appears particularly promising in the area of communication with the deaf and hard of hearing. Positive results have been obtained in this endeavor, providing motivation for this study of the phenomenon of transdermal electro-stimulation.[5,6]

During the course of this research the following objectives will be pursued:

(1) Introduce the reader to the phenomenon known as transdermal electro-stimulation.

(2) Develop a device for the specific purpose of transdermal sound stimulation which will enable research of transdermal hearing to be of a continuing nature.

(3) Present the general characteristics of this device, henceforth to be called the TRANS-DERMA-PHONE, as applied to non-deaf subjects.

(4) Propose avenues of future research and possible employment of the TRANS-DERMA-PHONE.

2. TRANSDERMAL ELECTRO-STIMULATION

The transdermal or TD hearing system is a biophysical one which incorporates the human body into the electronic circuitry. Actually, the system could be thought of as a special type of transceiver since the audio signal is modulated and transmitted by the electronic portion of the system and is received and detected by the human portion. The human is considered an integral part of the system since he is the electronic load or impedance that is driven by the transmitter.

The system can be best explained in terms of the divisions pictured in Figure 1, and their relationships.

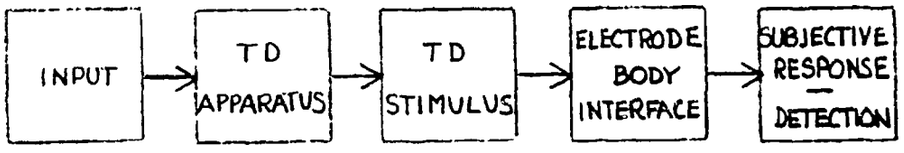

FIGURE 1. Transdermal Hearing System

a. Input

The input signal is generally comprised of some electrical excitation within the audio-frequency spectrum. Speech, music and pure tones, in their electrical form, are equally acceptable as input signals since no special restrictions are imposed within the frequency limits of normal hearing.

b. TD Apparatus

The TD apparatus, as illustrated in Figure 2, is electronically a fairly simple concept. The audio input provides the modulation signal to the modulator which in turn generates an amplitude-modulated waveform at the local oscillator frequency of approximately 100 kHz. Carrier Frequencies

Between 50 kHz and 600 kHz have been used, with no significant differences in response noted.[6] (See Figure 3)

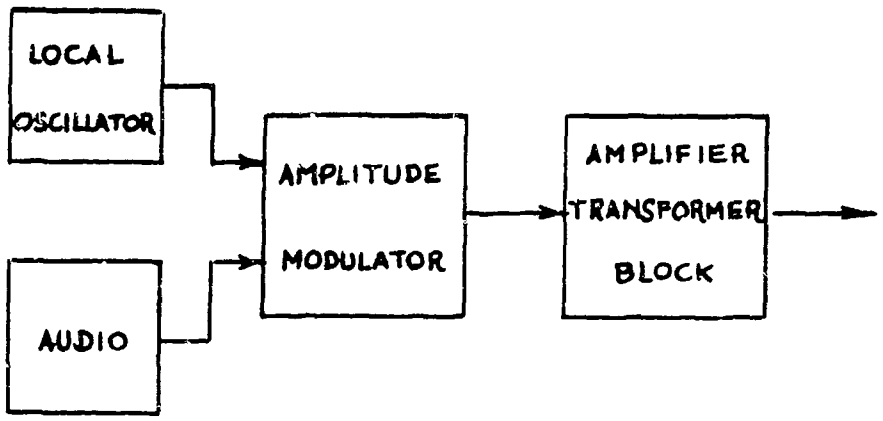

FIGURE 2. The TD Apparatus

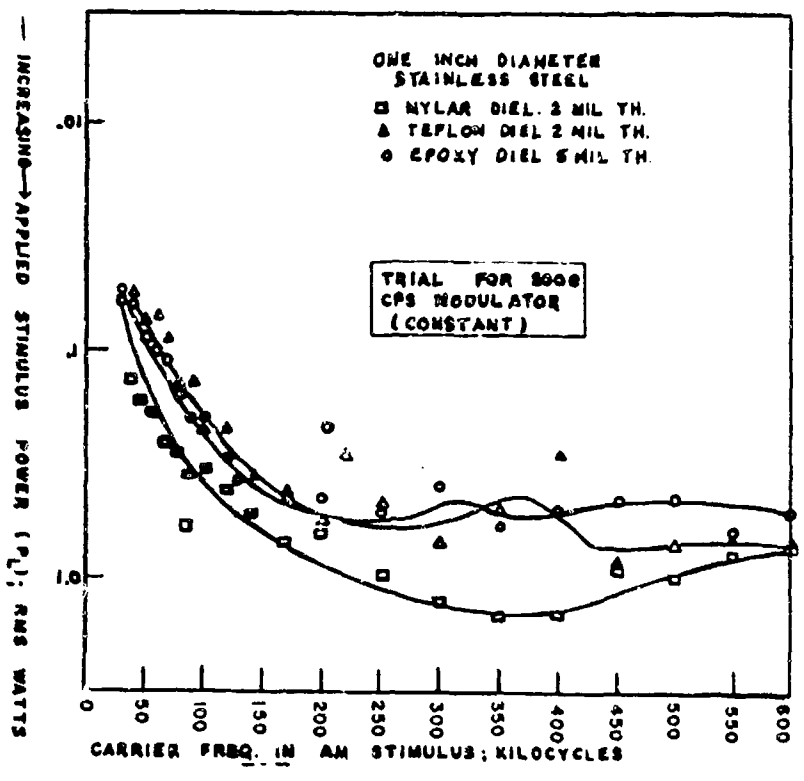

FIGURE 3. Example of Stimulus Power Required to Maintain Constant Level at Various Carrier Frequencies.[6]

The amplifier-transformer block amplifies the AM waveform and ultimately provides voltage transformation in order to meet the high-voltage, low-current requirement for proper stimulation.

c. TD Stimulus

The nature of the stimulus required to create the sensation of sound in the subject is that of a constant-frequency alternating current, modulated at least 30% by an audio signal. Past research has shown that, of the several parameters of the TD stimulus, current, which is a function of percent modulation and carrier frequency, is the most important. An increase in current due to either of the two above mentioned factors, has been shown to cause an increase in the intensity of the perceived sound up to approximately 90 db above threshold.[6] (See Figures 4 and 5)

Over the range of carrier frequencies investigated by Puharich and Lawrence, it was found that no improvement in purity, quality or intelligibility was obtained by increasing the frequency. With this observation in consideration then, it appears that the optimum carrier frequency would be within the range requiring the lowest output power level for a given response. This range runs from about 50 kHz to 150 kHz, and is in fact the spectrum within which most of the TD research has been conducted.[6]

d. Electrode-Body Interface

The electrode-body interface is actually the electronic load into which the stimulus signal is transmitted. The configuration in general consists of two insulated metal discs which are placed in physical contact with the receiving subject's skin, normally in the vicinity of the ear on the face or neck. The insulating dialectric on the discs and the skin of the subject provide the interface between the electronic and the bio-physical portions of the system. Through this interface, the AM radio-

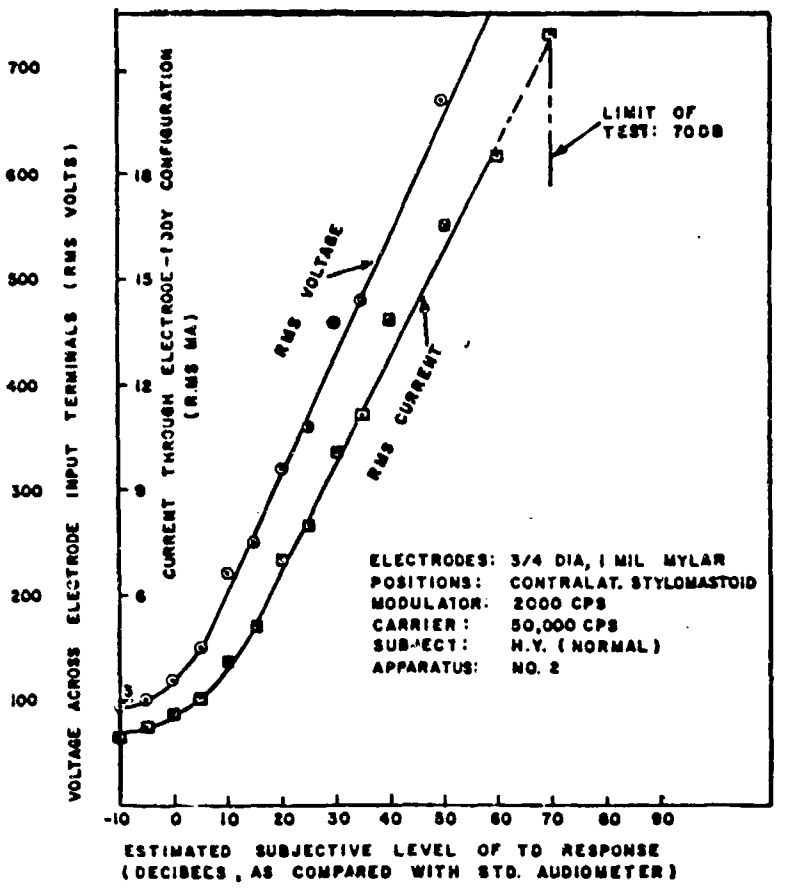

FIGURE 4. Example of Typical Operating Range of Parameters[6]

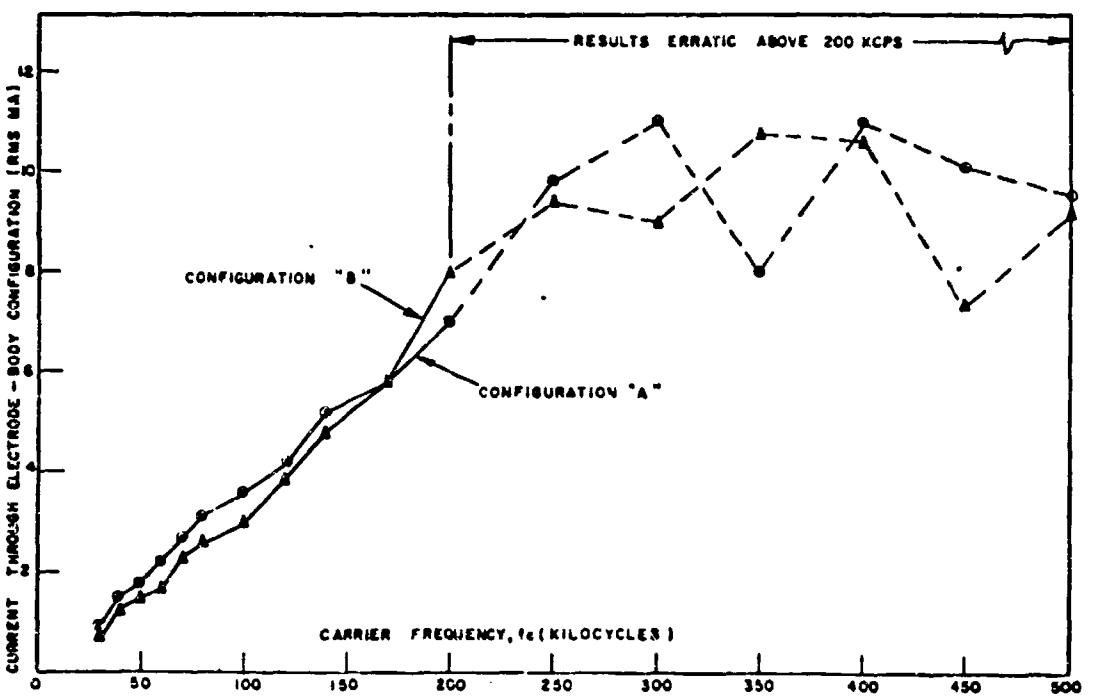

FIGURE 5. Example of Current Dependency[6]

frequency stimulus is coupled into the detection mechanisms of the human body.

Work has been done using bare metal instead of insulating electrodes, and similar results have been observed.[6,7] A greater danger factor exists however, and much lower voltage levels must be used.

Various sizes, shapes, and types of electrodes have been employed, but best results thus far have been obtained through 1/2 in to 1 1/2 in circular discs with insulation thicknesses varying from .25 to 1 mil of mylar film. Different dielectrics and metals have been used, but no significant differences or advantages from one composition to another were observed.[6]

The electrode-body interface is, by nature, a big variable in the TD hearing system. Each different electrode in the group mentioned above presents a different electrical impedance to the transmitter when in operation, and for a particular electrode, the impedance reflected is largely dependent upon the subject and the pressure of application. These impedance problems will be further discussed in conjunction with the TRANS-DERMA-PHONE in a later section of this report.

e. Subjective Response

The area of subjective response, detection and brain interprotation is by far the most complex and the least understood area of all. The most important of the known facts in this facet of the phenomenon is that sound can be received and understood; not only by the so called normal hearing subject, but by the deaf as well. In one study made by the Intelectron Corperation, four of the five acquired total deafness cases observed stated that they experienced sound as they remembered it, with pure tone and electrical word stimulation.[6]

Different studies have hypothesized different modus operandi for the process, but no one as yet has satisfactorily described the channel by which the stimulus reaches the brain. Of the several theories proposed to date, none have satisfactorily survived attempts to prove them fact.

It was theorized by Jones and Stevens that a capacitor effect within the head, between the tympanic membrane and the oval window, could be the mechanism for detection.[8] These membranes, acting as the plates of a capacitor, would be set in motion by the modulated r-f field, and ultimately provide a signal to the brain. Three factors, however, tend to disprove this theory. First, by rotating a capacitor in an r-f field, a marked change occurs in the capacitor as a function of its orientation in the field. No such change was noted as Frey's subjects rotated their heads in a fixed r-f field.[3] Second, at the wavelengths used, the distance between the membranes appeared to be rather small. Finally, one subject, in whom this mechanism could not possibly function due to ostosclerosis, heard the r-f sound.

Several people propose that radio waves are received and detected by the brain itself. Burr and Mauro,[9] and Morrow and Sepiel,[10] have presented evidence that electrostatic and electromagnetic fields exist about neurons. With this in mind, it seems reasonable that the induced r-f field may interact with neuron fields in the brain, thus providing some resultant modulated bias which can be interpreted. As yet, evidence of proof or disproof of this mechanism is inconclusive.

Another popular theory is that the phenomenon is the result of direct cortical or nerve fiber stimulation.[6] This arises from the facts that subjective response in the deaf is obtained only when the electrodes are

placed in the proximity of the seventh nerve, in the stylomastoid area, and that mechanical vibration of skin tissue over the entire body takes place.

Sommer and von Gierke take a more pessimistic approach.[11] They state that "electromechanical field forces must be considered as primary causes for the hearing sensations observed with various types of electronic stimulations. Theoretical considerations and existing experimental data make it most likely that these forces account for all reports where the hearing of pure or distorted tones (rather than indiscriminate noise) was involved. There is no evidence of any direct perception of electrical audio signals which would not go via electromechanically induced vibrations in tissue and normal reception in the cochlea."

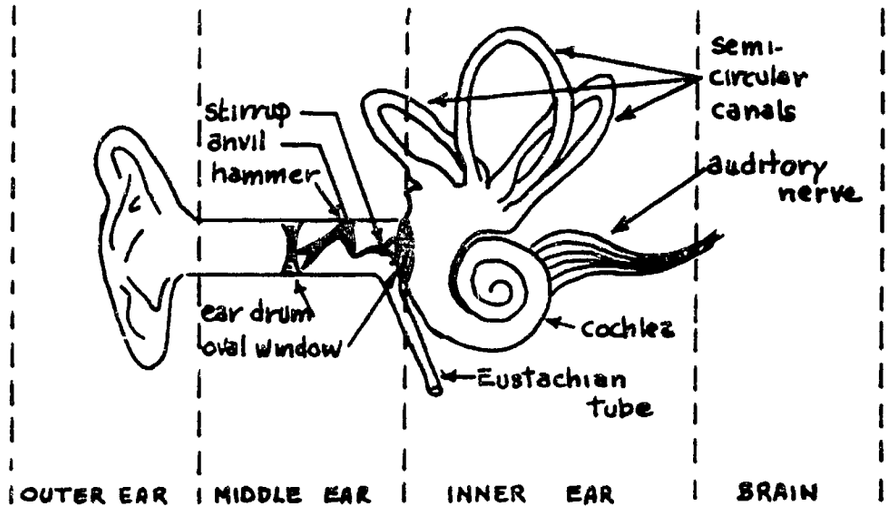

FIGURE 6. Physical Description of the Ear.

The experimental data presented by most of the researchers in the field of electro-stimulation indicate to this author with reasonable certainty, that there must be more than one channel by which the excita-

tion reaches the brain. It seems obvious that the mechanical vibrations set up in the body would certainly create normal responses in the functioning ear system, thus "fooling" the ear and ultimately the brain into thinking that the intelligence received was an acoustical signal instead of an electromagnetic signal. Also, it seems entirely feasible that a means by which the stimulation and detection could be accomplished is by cochlea microphonics.[12] This would explain some of the hearing by acquired deafness cases where the cochlea was operational. The implication is that stimulation is via the classical bone conductive apparatus at the organ of Corti by mechanical oscillation of tissues (and cochlea fluids), driven through electromechanical transduction at the electrodes. (See Figure 6)

We can be reasonably sure that in the majority of cases studied, the normal channel and cochlea microphonics are accountable as the path of energy flow. However, there are cases reported where sounds were heard and words were recognized and neither of the two above classical modes were operational. This mode, as yet, has remained undefined, but the implication is that there is a low impedance channel via the stylomastoid skin area allowing more energy delivery to deeper areas of the head.

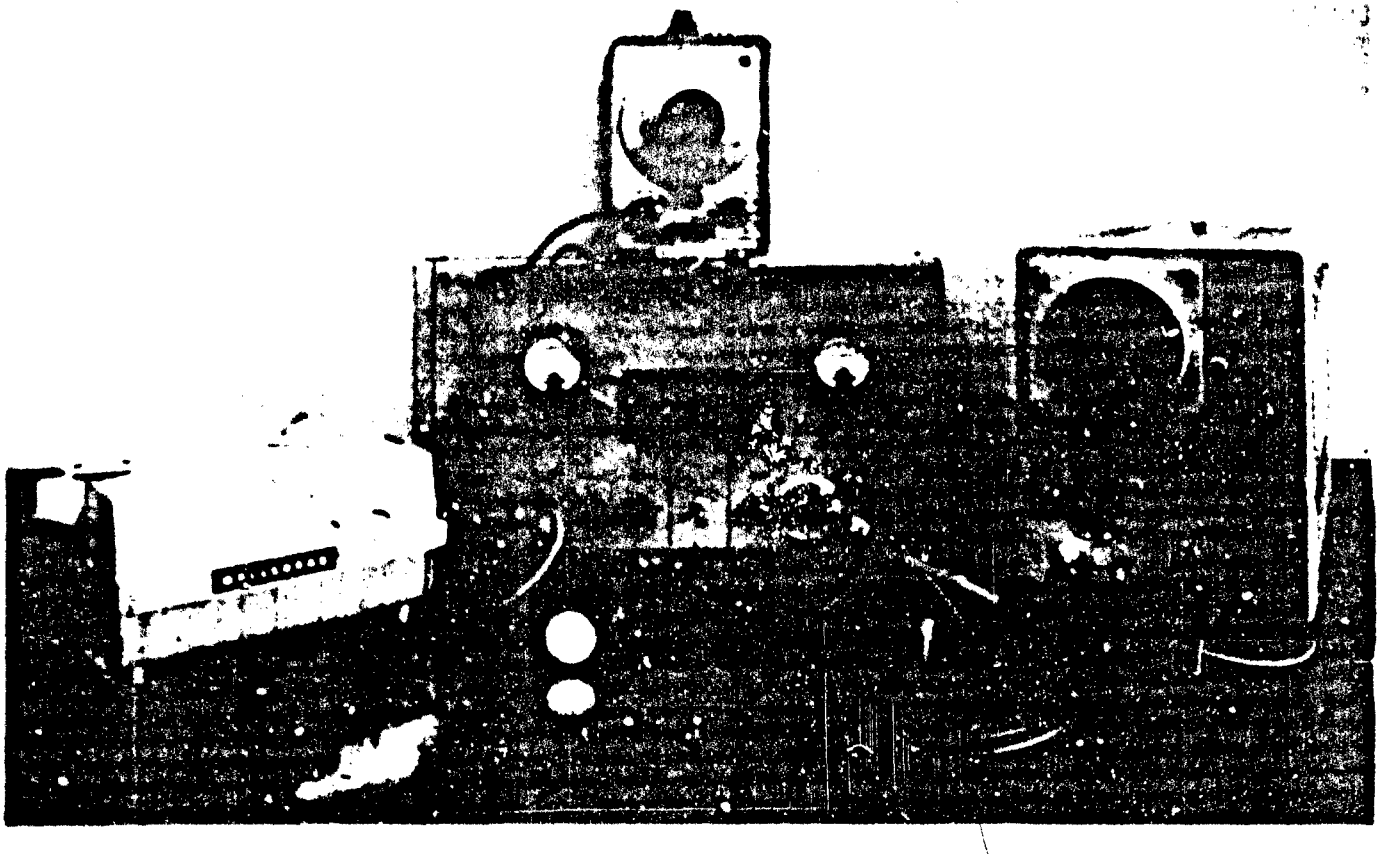

FIGURE 7. The TRANS-DERMA-PHONE System

3. THE TRANS-DERMA-PHONE

a. Design Objectives and General Specifications

The primary objective in building the TRANS-DERMA-PHONE was to provide a tool specifically for research of transdermal hearing and its applications. The desired operating characteristics were determined through careful research of previous studies in order to concentrate design effort in relevant areas of operation.

A constant carrier frequency of 100 kHz was chosen for several reasons. First, the report by Puharich and Lawrence indicated that the region between 50 kHz and 150 kHz was the most desirable for the carrier frequency since required power levels were considerably lower for desired response. Secondly, a single carrier, vice a tunable carrier, greatly simplifies the electronic design since circuit operation is dependent upon resonant tank circuits at the carrier frequency. Finally, 100 kHz was chosen vice 50 kHz or 150 kHz as a compromise between power level of output and frequency separation between carrier and audio.

On the premise that high fidelity, that is, fidelity better than that afforded by the normal telephone channel, is not a requirement in such a device as this, the audio-frequency bandwidth was specified to be between 200 Hz and 5000 Hz. This range is more than sufficient to provide the necessary formant frequencies for all vowels, and the required upper frequencies for the consonant sounds.[13,14]

It was anticipated that various types of inputs such as taped voice, tone, or music, or the output of an audio oscillator would be used in conjunction with the TRANS-DERMA-PHONE. Also, in the more distant future, there may be a requirement for a microphone input to allow "complete loop transdermal stimulation"; that is, to allow a person to perceive his own

voice, transdermally, as he speaks. To provide for the above possibilities, a high-impedance input of approximately 50,000 ohms was provided, with two selectable input jacks, one for tape recorder pre-amp output and the other for signal generator output. A third jack was provided to enable microphone input at such a time as the requirement arises.

The modulator and following amplification stages were designed to provide sufficient range of modulation percentage (30% plus) and adequate power for acceptable levels of response intensity. Since past research indicated that higher power levels would be required for the deaf (on the order of 10 watts) than for so called normal subjects,[6] it was desirable that provision be made to allow for increased output power levels at such a time as this is deemed necessary. To provide these capabilities, two seperate power supplies were required; one 12-volt supply for the low level circuits, such as the modulator and oscillator, and a 100-volt supply for the output stage.

One of the basic considerations was simplicity: that is, simplicity both in the area of design and circuit complexity and in the operation of the device. The TRANS-DERMA-PHONE is engineered to be operated by non-electronically trained operators, such as physiologists and speech therapists, and to provide relatively trouble-free service for many hours.

Since the device is to be primarily a research tool, particular attention was given to the stimulus monitoring systems. A direct readout of electrode-body rms voltage is provided, with a calibrated tuning capacitor on the output to provide electrode-body capacitance and current information. A monitoring output jack is also provided to allow visual monitoring of the stimulus signal by cathode ray oscilloscope. An input-level meter provides visual indication of system operation and proper modulating signal level.

Insofar as the electrode-body configuration was concerned, there existed a requirement for better interfacing. In attempts to satisfy this need, various electrode combinations were constructed. Of primary concern in the interfacing problem was the control of electrode application pressure, which has a great effect on subjective response to the stimulus. Also, since it was evident that only one electrode is required in the stylomastoid area, the possibility of a combination electrode pair in one unit was explored.

b. Circuit Description and Operation

The TRANS-DERMA-PHONE is a solid state AM transmitter-receiver employing low-level modulation. Integral d-c power modules are provided, and the basic circuitry is wired on a 22-pin plugin circuit board. Detailed wiring and electronic circuit diagrams are found in Appendix E.

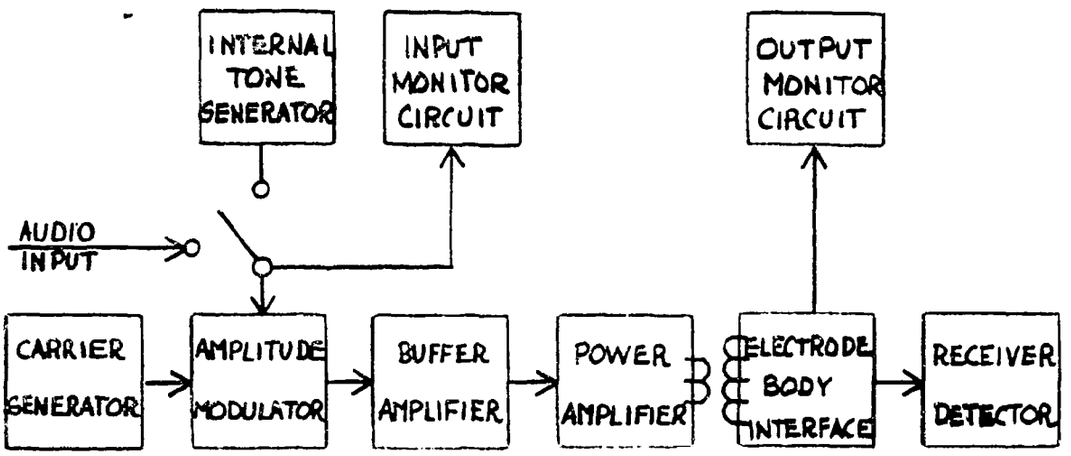

FIGURE 8. TRANS-DERMA-PHONE Block Diagram

In an attempt to provide good modulation quality and high input impedance along with electronic simplicity, a dual-gate MOS field-effect transistor is employed as the modulator. By injecting the local oscillator or

carrier signal at one gate and the input signal at the other gate the extremely good mixing characteristics of the FET are utilized. (See Appendix A)

The 100 kHz carrier frequency is supplied by a simple L-C base-tickler transistor oscillator. Sufficient signal amplitude is provided to allow an appreciable range of carrier-level control at the gate of the modulator.

Providing proper impedance matching and isolation for the modulator and the power amplifier is a buffer amplifier. To achieve the desired input impedance and current gain, a silicon NPN transistor is employed in its common-collector configuration. The output of this amplifier is injected at the base of the output-stage transistor.

The output power amplifier consists of a silicon-mesa power transistor, operated in the class B mode. The modulated r-f signal is developed across the output-transformer primary windings in the collector circuit of the amplifier, and is mutually coupled to a high-voltage, low-current, tuned-secondary circuit comprised of the electrode-body interface and the output tuning capacitor. The transformer is toroidal wound on a high-mu ferrite core with baked lacquer insulated windings to allow break down-free high-voltage operation.

The electrode-body interface is physically comprised of two insulated copper electrodes in dermal contact with the subject. Seven different configurations of electrodes are provided including circular discs of 1/2 in, 3/4 in and 1 in diameters, and concentric combinations, with 1/2 in and 3/4 in diameter positive electrodes and an annular outer ground ring. The physical structure and subjective response characteristics of each configuration are discussed in parts c and e of this section.

The final block in the main body of the TRANS-DERMA-PHONE is the detector-receiver. At this point, little more can be said about its operation than has previously been said. It suffices to say, that the body receives the stimulus signal via the skin, and proceeds to perform the necessary operations in order to provide the excitations to the brain necessary to simulate audition. It is hoped that discovery of the actual mechanisms of this operation will be one of the fruits of the research which will be afforded by the TRANS-DERMA-PHONE.

As a research tool, the various parameters of the stimulus must be monitored. For this purpose, two circuits are provided. The input monitoring circuit provides a rectified current to a d-c meter which is calibrated to indicate proper input signal level. Since the input signal is of the order of 200 millivolts, rms., a stage of amplification is employed to provide sufficient proportional voltages to the full-wave rectifier to yield full-scale deflection of the 50 micro-ampere movement in the bridge rectifier circuit.

To provide an internal tone for reference and test purposes, a phase shift oscillator is employed. This interval tone generator supplies a simusoidal signal of approximately 1.7 kHz.

The output monitoring circuit is composed of a high-voltage diode stack and a capacitor in series across the electrodes. By charging the capacitor to the peak value of the output signal and allowing it to discharge through a large resistor in series with a 50 micro-ampere meter, a current flow proportional to the peak value of output voltage is indicated. Calibration of the meter face allows direct indication of the electrode-body rms voltage.

In conjunction with the voltage metering circuit, the tuning capacitor is controlled by a vernier knob which is calibrated to provide readings which are easily converted to electrode-body capacitance and rms current by use of the parameter graphs shown in Appendix C.

c. Electrode Description and Construction

Several electrode terminations and their related accessories are provided with the TRANS-DERMA-PHONE. Each pictured electrode unit is not specifically designed for a particular application. (See Figure 9) Actually, the assorted configurations represent the electrode evolution which transpired throughout the design and preliminary research stages. The changes which were made in electrodes during this period of time were primarily aimed at minimizing the effect of contact pressure on the skin of the subject. Another thing which prompted change was the early observation that location of the ground electrode had little effect on subjective response.

The related accessories which evolved with the electrodes include the two initial application wands, a pair of adjustable-single-disc receptacles, and finally the adjustable-concentric-pair receptacle.

(1) Electrode Construction

Each electrode unit is constructed basically the same way. In all cases the metallic disc or ring is made of 1/8 in copper with electrical connectors soldered on the back face of each piece. These connectors take two forms; either banana plugs and jacks or wire leads. All of the single discs have banana-plug connectors to allow easy interchange.

The fixed-concentric-pair consists of a center conducting electrode and an outer ground electrode. Contact to each of these electrodes is accomplished by banana-plug connection. The application ward connects to the center electrode and a ground lead plugs into the jack on the outer ring.

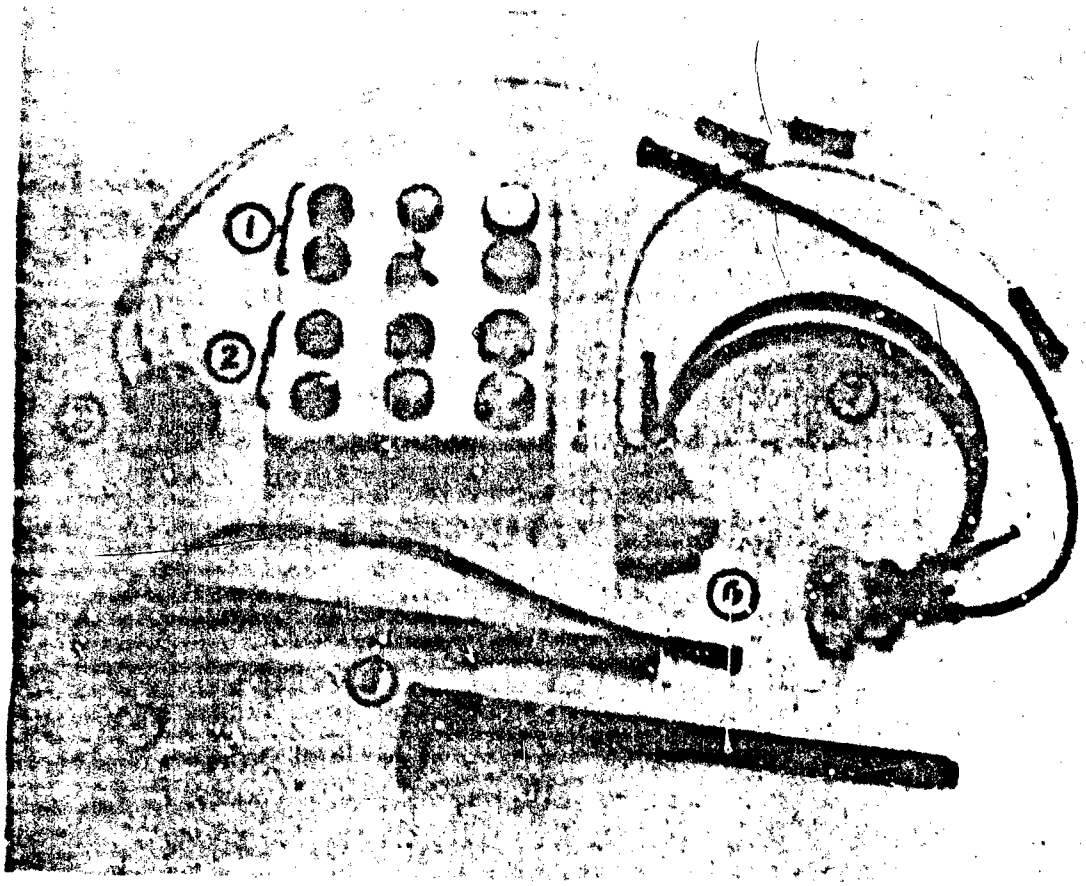

1. Set of 1/2-mil dielectric, single-disc electrodes, 1/2 in, 3/4 in, and 1 in in diameter

2. Set of 1-mil dielectric, single-disc electrodes, 1/2 in, 3/4 in, and 1 in in diameter

3. Adjustable-concentric-pair receptacle - 1 mil dielectric

4. Fixed-concentric-pair electrode - 1 mil dielectric

5. Application wands

6. Single-disc electrode receptacles

7. Standard headset

FIGURE 9. Sundry Electrodes and Related Accessories

The adjustable-concentric unit has a permanent wire lead connecting the outer ring, which is on the receptacle, to the output cable. The interchangable center electrodes are the same electrodes that are previously described as single discs. (except for the 1 in discs, which are physically too large for the receptacle)

Each different unit is potted in epoxy to provide both insulation and a physical case for the electrodes. The conduction face of each unit has been milled on a lathe in order to set the electrode in flush with the epoxy case and to provide a very smooth electrode surface. The smoother the finish on the metallic surface, the less the chance for electrical tickle due to insulation breakdown. (ie. fewer surface peaks for electrical point discharge)

Across the entire face of each unit is a thin film of mylar insulation which is adherred to the face of the electrode and epoxy case with a thin layer of contact cement. Particular care was taken to smooth the film and cement to a uniform layer in order to provide the most constant dielectric possible across the conduction face. Since the film thickness is 1/2 mil, the above process was repeated in order to obtain 1 mil of insulation for the second set of electrodes.

(2) Related Accessories

The application wands, which provide a means for hand application of the electrodes in various positions, are constructed of 3/8 in plastic tubing. Electrical contact is made through the 11 in long L-shaped tubes and banana jacks are located on each end to allow connection of the output cable and the dermal electrodes. Two wands are provided to give a large degree of freedom on the location of the pairs of single discs. Only one wand is required with the fixed-concentric-pair electrodes.

In an attempt to minimize the application pressure problem, single-disc electrode receptacles were constructed which could be worn in a standard headset. These receptacles provide more versatile electrode applications in that provision for interchange of 3/4 in, 1/2 in, 1 mil and 1/2 mil electrodes is made along with an adjustable pressure control. The receptacle is constructed of 1 1/2 in tubing, 3/4 in long, closed on the back face with a plastic disc. A banana jack is mounted inside the closed cylinder through the back face and is positioned by spring tension. The jack is moved in and out by adjusting the retaining nut on the outside of the back face. The desired electrode is inserted into the jack from the front side and electrical connection is made from the output cable through the banana jack. A foam rubber face cushion is provided on the front rim of the cylinder for greater comfort. (See Figure 10)

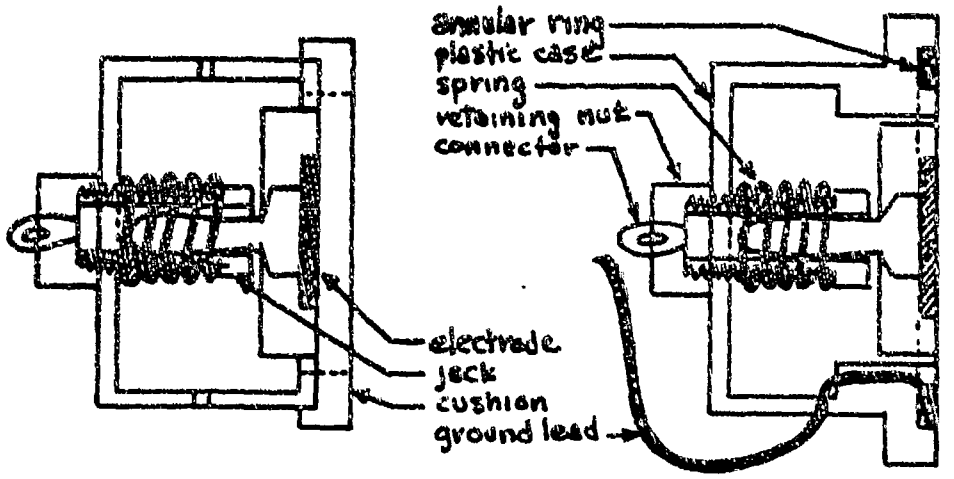

a. Adjustable-single-disc receptacle

b. Adjustable-concentric-pair receptacle

FIGURE 10. Description of Electrode Receptacles

The adjustable-concentric-pair receptacle is basically of the same construction as described above. In this case, however, in place of the face cushion, an annular epoxy-encased ground-conduction ring is mounted. The face of this electrode ring is processed in the same manner as previously described for all other electrodes, with 1/2 mil of mylar insulation. Provision is made for center electrode interchange and variation of application pressure in the same manner as described for the single-disc electrode receptacle.

Various cables and adapters are also provided for use with the different electrode combinations and configurations.

d. Electrode-Body Impedance

As has been previously noted, the electrode-body impedance is, in the true sense of the word, a variable parameter of the transdermal stimulus. In order to improve transmitter and electrode design, and to give a better insight as to the mechanism of transduction, a concentrated effort was made to determine the impedance characteristics of the electrode-body interface. Three different techniques were used in this endeavor and the results of each method were in fairly close agreement. (See Appendix B)

Electrically, the electrode-body interface can be represented by either a series or parallel R-C equivalent circuit as shown in Figure 11.

The series circuits were synthesized by method no. 1 and the parallel circuits were the results of measurements taken in method no. 2. Since the circuit Q is generally between 20 and 40 for all configurations, the values of C_p approximately equal C_s, and $R_s = \frac{R_p}{Q^2}$. It can readily be noted at this point that the configuration presents an almost entirely reactive impedance to the transmitter. Observation can also be made that size and

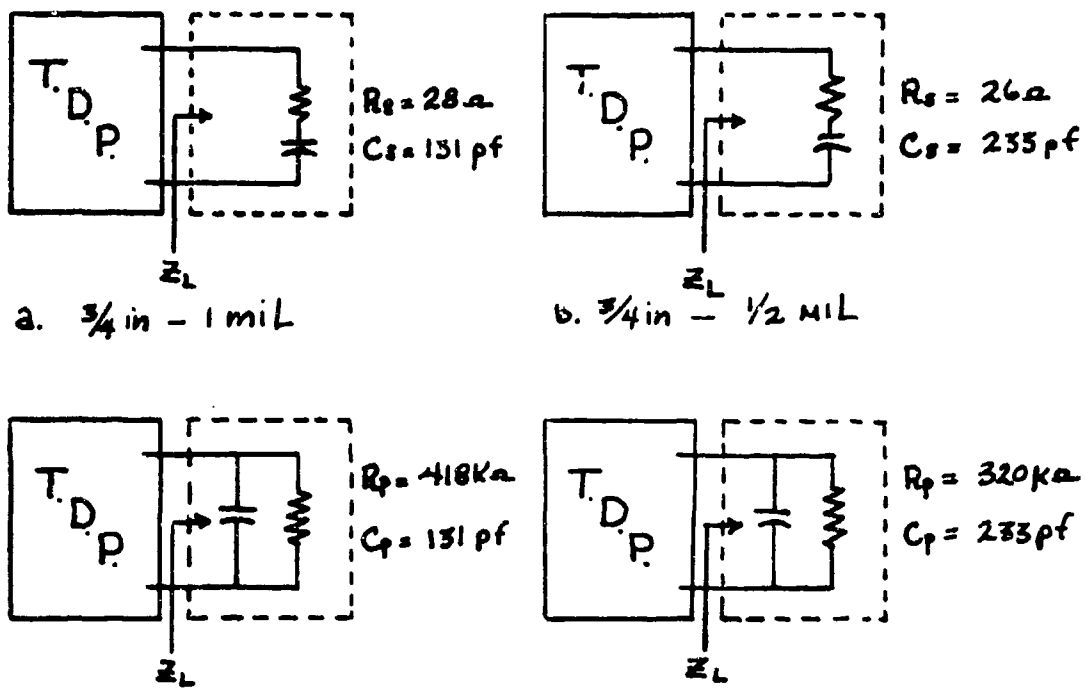

FIGURE 11. Electrode-Body RC Equivalent Circuits

ELECTRODE	diameter	R_p Ω	R_s Ω	C pf
SINGLE DISC PAIR 1 MIL	1"	278K	44.4	140
	3/4"	418K	28.0	131
	1/2"	688K	24.0	112
SINGLE DISC PAIR 1/2 MIL	1"	375K	36.0	240
	3/4"	320K	26.0	233
	1/2"	368K	45.0	170
FIXED CONC. PAIR 1 MIL		305K	20.0	167
ADJ. CONC PAIR 1 MIL				
1 MIL	3/4"	245K	28.0	200
	1/2"	350K	20.0	148
1/2 MIL	3/4"	190K	24.0	240
	1/2"	250K	20.0	196

FIGURE 12. Various Electrode-Body Impedances

configuration of the electrode as well as dielectric thickness have a definite influence on the termination impedance. Since the value of Z_L is almost entirely dependent upon X_c, it is reasonable to assume that the impedance would vary somewhat directly with dielectric thickness and indirectly with electrode diameter. This assumption is substantiated by the experimental data obtained. (See Figure 12)

The tabulated data are the aggregate of results obtained by the three methods discussed in Appendix B. Although it was anticipated that precise values for each electrode configuration could be obtained, this was not the case. It was observed during the course of the measurements that the same response could be obtained for a given configuration over a fairly wide range of application pressures. Since it was impossible to duplicate these pressures from method to method and configuration to configuration, the results serve only to give the experimenter a "feel" for the relative magnitude of the impedance involved. By methods 1 and 2 the relative magnitude of the resistive component was confirmed, and by all three methods, an accurate value for the termination capacity for each given configuration was obtained.

In view of the above observations, it can be noted that the effect of application pressure is reduced within the tuning limitations of the TRANS-DERMA-PHONE. In other words, if the "ball park" value of electrode-body capacity is within the tuning range of the output-circuit tuning capacitor, a resonant condition can be reached and a near optimum level of perception can be obtained.

e. Response Characteristics

Throughout the design and testing of the TRANS-DERMA-PHONE, it was evident that the subjective response to the TD stimulus was not constant

over the audio-frequency spectrum. Early in the investigation of the phenomena it seemed apparent that the upper frequencies (above 600 Hz) were more intense than the lower frequencies for a given signal strength and percent modulation. Since most of the energy of the voice signal is contained in the portion of the spectrum below 600 Hz,[13] a better description of the response characteristics was required.

As outlined in Appendix B, threshold response tests were conducted on three so called normal hearing subjects for the express purpose of determining the relative response characteristics over the audio spectrum. Since pure tones were best discernable at 7 kHz, this signal level was used as the reference. As frequency decreases, a greater signal strength is required for perception. This can be observed in Figure 13, which indicates approximately a 14 db higher signal requirement at 400 Hz for detection.

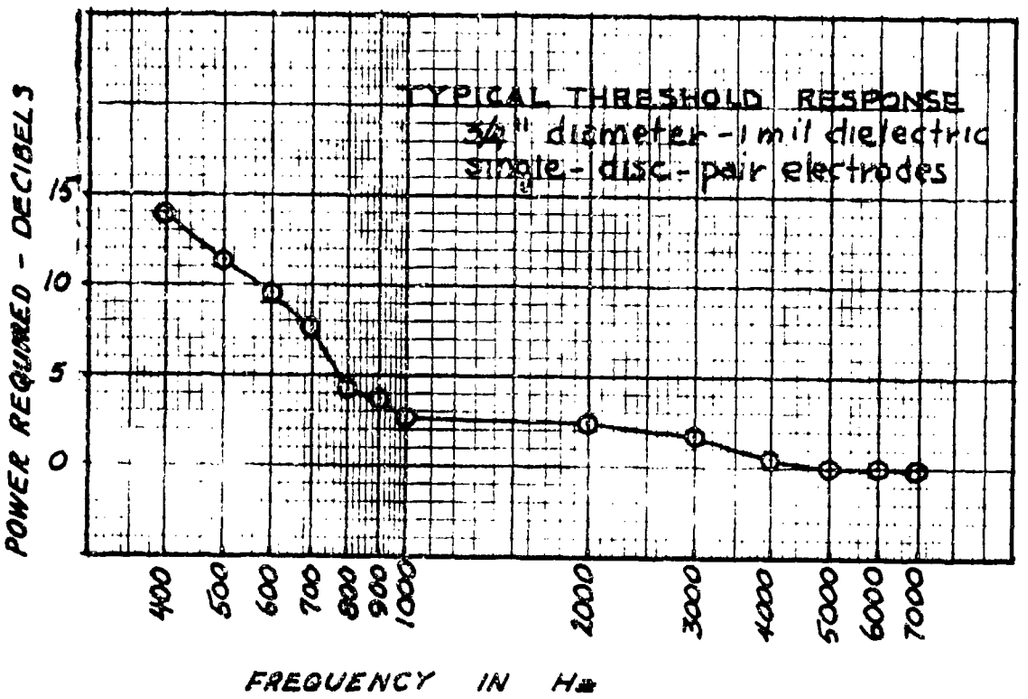

FIGURE 13. Typical Threshold Response Curve

FREQ. HZ / SUBJECT / THRESHOLD DB.	400	500	600	700	800	900	1000	2000	3000	4000	5000	6000	7000
G.S.	11.8	10.4	8.9	7.95	7.44	5.26	3.16	2.86	2.14	0.9	0.0	0.0	0.0
W.S.	14.0	11.5	9.88	7.96	4.24	3.86	2.8	2.36	1.94	0.5	0.0	0.0	0.0
J.R.	15.9	14.0	9.88	6.8	9.88	5.44	2.8	2.36	1.0	0.5	0.0	0.0	0.0

FIGURE 14. Tabulated Threshold Response Data

The above typical threshold response characteristics substantiate the early observations. These results, however, are not particularly alarming since the power requirement spectrum for normal air conducted audio tones has roughly the same shape, with more power being required to reach the threshold of hearing at the lower frequencies than at the highs.[13]

Based upon these observations, it would seem to follow that at low output signal levels, that is levels below that required for threshold response at say 600 Hz, the intelligence contained in the spectrum below 600 Hz would be lost. In this sense, it appears evident that the output signal-power requirement would be dictated by the low-frequency response necessary for word or sound discrimination.

f. Word Discrimination Test

In an attempt to obtain a general understanding of the ability of a so called normal subject to understand spoken words, the word discrimination test was conducted. (See Appendix B) Due to its ease of positioning,

the fixed concentric-pair electrode configuration was used in conjunction with the application wand, and tests were conducted at the four locations illustrated.

First attempts to conduct this experiment resulted in complete failure at each position other than that directly forward of the ear. In each of these runs, the subject usually understood the first one or two words, and then could not discern any of the remaining ones. It was observed that the output signal magnitude deteriorated rapidly with time after initial application to such an extent that the intensity level was below that required to stimulate perception of the test word. All indications were that body oils and moisture accumulating between the electrode and the skin were changing the interface to such an extent that the resultant termination impedance was beyond the tuning range of the TRANS-DERMA-PHONE.

To combat this obvious drawback in TD stimulation techniques, each subject was "trained" to remove the electrode between each test word and then reapply it just prior to transmission. This procedure was made possible by the monitoring circuits of the TRANS-DERMA-PHONE, which gave positive forewarning of transmission time for each test word. Utilizing this procedure in each of these three cases, the scores recorded in Figure 15 were obtained.

Of the three subjects tested, two were unexperienced in the use of transdermal stimulation. The third subject was familiar with the technique, and was better prepared to cope with the above mentioned problem. As a result, the two unprepared subjects had lower discrimination scores in each case, due mainly to words missed because the electrode was not in place for transmission.

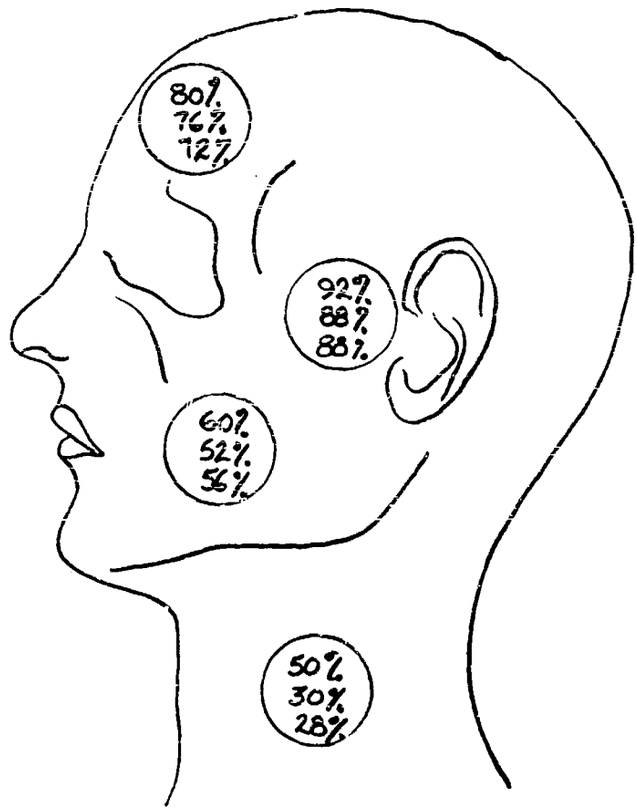

FIGURE 15. Word Discrimination Scores

It goes without saying that this method of electrode manipulation would be unsatisfactory for speech transmission. This does not, however, alter the fact that, with the proper electrode-body interfacing, the mechanism of transdermal stimulation does work-not only in the proximity of the ear, but on the forehead and the fleshy parts of the face and neck.

Each of the subjects tested indicated that in every case when the match was proper and maximum signal was applied the articulations were easily discernable and the fidelity was good. An apparent decrease in signal intensity level was noted as the electrodes were moved away from the general area of the ear.

Four additional interesting observations were made. First, since perception was good with the electrode located in the fleshy face and neck area, it may be deduced that bone conduction is not a large factor in the stimulation experienced. Secondly, while attempting to correct the application problem discussed earlier, it was noted that with the electrode placed on the short stubble of hair just above and forward of the ear a maximum signal could be set and maintained. Apparently this layer of hair provided a cushion which allowed the skin to breath and yet also provided the necessary path for the stimulating r-f field. The same condition appeared to exist in the short hair on the back of the neck although the perceived stimulus was reduced in intensity. The third observation was that of vibration. Skin vibrations were readily apparent in the neck region at certain application pressures. These uncomfortable sensations were most frequently noted when the application pressure of the electrode was very low. No increase in discrimination capability was promoted by this vibration. Rather, enough of a distraction was created to cause the subject's concentration on the transmitted test word to be lost, therefore causing a miss. Finally, at times when the subject was perceiving a maximum signal, the operator could also hear the test words. By prior knowledge of what the word was, recognition was possible. Evidently, the mechanical vibrations set up on the skin surface of the subject were strong enough to generate an airborne acoustical radiation.

g. General TRANS-DERMA-PHONE Evaluation

Although few detailed experiments have been conducted in evaluation of the TRANS-DERMA-PHONE, several comments are in order regarding the general performance of the apparatus and its related accessories. Most of these comments are based upon observations made by the author throughout

the design and construction stages and while conducting the experiments that have been described.

It appears that the basic apparatus does in fact operate as anticipated. The required excitation signal is provided by the TRANS-DERMA-PHONE. As expected, the difficulties and limitations of the system were found in the interface. The electrode-body configurations which evolved during this study are admittedly far from optimum. It is apparent that, although encouraging results were obtained, greater refinements must be made in construction techniques, means of application, control of pressure and basic configuration design.

Past studies indicated that most work in this area had been accomplished using the single-disc type electrodes in pairs. Of these type electrodes used with the TRANS-DERMA-PHONE, best results were realized with the 3/4 and 1 in, 1 mil dielectric units. Greater stimulus intensities were experienced, with application pressures appearing to be less critical to the overall response.

The observation that the ground electrode placement was not critical so long as the excitation electrode was in a position of perception prompted the construction of both the fixed and the adjustable-concentric-pair electrodes. With these units, interfacing appeared to be more efficient. There was a marked improvement in performance over the single-disc pairs, but the anticipated perception improvement of the adjustable pair over the fixed pair was not observed. This observation can be attributed to two factors, neither of which was readily apparent at the first observation. First, the dimensions of the ground, or outer ring of the adjustable unit are not the same as for the fixed unit. The inner diameter of the ring in the adjustable unit is greater, allowing use of the existing

single discs for the inner electrode. Since this difference in diameters causes a difference in electrode surface area, then there is a corresponding difference in interface characteristics between the two units. The second, and possibly the most contributing factor, is that which was observed in the word tests. You may recall that as the electrode configuration remained fixed in position the stimulus signal strength became less intense, and that encouraging results in this test were obtained by continuously manipulating the electrode. This effect is definitely a factor in the degraded performance of the adjustable pair over the fixed pair. The ease of manipulation of this unit with the application wand allowed the observer to keep the signal strong whereas the permanancy of the adjustable unit had just the opposite effect.

As the reader may surmise from these statements, the best performance of the TRANS-DERMA-PHONE, as it presently exists, can be obtained using the wand-applied fixed-concentric-pair electrode.

4. CONCLUSIONS

The main objective of this research was to design and build a device expressly for the purpose of studying transdermal stimulation. It is the opinion of the author that this goal has been reached. This does not mean, however, that the TRANS-DERMA-PHONE is the ultimate in transdermal stimulators. On the contrary, it is merely a stepping stone to bigger and better things. Just as it was during the concept, design and construction stages of the TRANS-DERMA-PHONE that greater insight into the phenomenon bred modification and refinement; so will it be as research continues in this field here at the Naval Postgraduate School.

The general observations made in evaluation of the TRANS-DERMA-PHONE serve as positive indications that transdermal stimulation, as a possible method of communication with both deaf and normal hearing subjects, must be investigated. As this investigation moves on toward the answers, it will become increasingly apparent that much work still must be done on the electrode-body interface. It is obvious that electrodes such as those supplied with this, the first model of the TRANS-DERMA-PHONE, are inadequate. It is even more apparent that before more efficient electrodes are realizable, more must be known about the mechanisms of stimulation and detection.

The experiments conducted in this study give us some insight regarding particular questions yet to be answered. First of all, if the skin tissue vibrates, as it was observed to do, just what causes this action, and what contribution does this mechanical property make to the detection process? Second, since the operator in some instances can hear the stimulus when the electrode contacts the subject, does this imply that the subject is also hearing the stimulus in a normal manner?

In the interfacing problem, why does the signal rapidly deteriorate with application time? Is it a detuning process which could be corrected by a self-tuning, constant-signal output stage in the TRANS-DERMA-PHONE, or could it be the result of a bio-physical conditioning such as fatigue, heating (diathermy effect) or nerve biasing.

Another question of paramount concern is, can a deaf person perceive sound by transdermal stimulation, and if he does, is each perception unique to a particular excitation signal? This question stands foremost in the mind of the author, who envisions the use of a second or third generation TRANS-DERMA-PHONE in a "complete-loop transdermal-stimulation" system for speech theraphy. Such a system would only require that the perceived sensation be uniquely descriptive of the particular excitation signal. If, by "hearing" himself articulate sounds, a deaf subject could eventually duplicate sensations stimulated by a theraphists' utterance, the major obstacle in teaching the deaf to speak would be overcome.

One would like to believe that these answers will come quickly and that, for the sake of the deaf, they will be encouraging. We must be realistic however, and not rule out the possibility that this phenomenon will not work for the deaf. Even so, many avenues of application to people with normal hearing remain unexplored. It is obvious that, be it the ear, the nerves, or the brain, an AM detection mechanism exists. How will this mechanism react to frequency modulation or single-sideband signals? Is there some existing requirement for a communications system of this nature? Just what are the possibilities of transdermal stimulation in modern communications?

It is hoped by this author that the TRANS-DERMA-PHONE will supply the impetus which will lead curious people to answers that will contribute

to communication in general and in time be the long sought breakthrough in communication for the deaf.

5. BIBLIOGRAPHY

1. Volta, A.: "On the Electricity Excited by Mere Contact of Conducting Substances of Different Kinds." Roy. Soc. Phil. Trans. 90:403,1800.

2. Anderson, A. B. and Munson, W. A.: "Electrical Excitation of Nerves in the Skin at Audio Frequencies." J. Acoust. Soc. Am., 23:155,1951.

3. Frey, A. H.: "Human Auditory System Response to Modulated Electromagnetic Energy." J. of Applied Physiology, 17 (4): 689, 1962.

4. Stevens, S. S.: "On Hearing by Electrical Stimulation." J. Acoust. Soc. Am., 8: 191, 1937.

5. Puharic, H. K., and Lawrence, J. L.: "Modulated Radio Frequency Energy Used to Stimulate Audition in Totally Deaf Humans." Presented at the 35th Annual Meeting of the Aerospace Medical Association, Miami, Fla., May 11-14, 1964.

6. Puharich, H. K., and Lawrence, J. L.: "Electro-Stimulation Techniques of Hearing." USAF, RADC-TDR -63-1963.

7. Flottorp, G.: "Effects of Different Types of Electrodes in Electrophonic Hearing." J. Acoust. Soc. Am., 25:236, 1953.

8. Jones, R. C., Stevens, S. S., and Lurie, M. H.: "Three Mechanisms of Hearing by Electrical Stimulation." J. Acoust. Soc. Am., 12: 281, 1940.

9. Burr, H. and Mauro, A.: Yale J. Biol. and Med., 21:455, 1949.

10. Morrow, R. and Seiple, J.: Wash. Acad. Sci., 50:1, 1960.

11. Sommer, H. C. and von Gierke, H. E.: "Hearing Sensations in Electric Fields." Aerospace Medicine, Sept. 1964, 834-839.

12. Gersuni, O. V., and Volkhov, A. A., "On the Electrical Excitability of the Auditory Organ on the Effect of Alternating Currents on the Normal Auditory Apparatus." J. of Experimental Psychology, 19: 370-382, 1936.

13. Fletcher, H. F: Speech and Hearing in Communication, New York: Van Nostrand Co., 1953.

14. Stevens, S. S. and Davis, H.: Hearing, New York: John Wiley and Sons Inc., 1938.

15. R.C.A. Application Note, File No. 285, RCA MOS Field-Effect Transistors.

APPENDIX A

MODULATOR OPERATION OF A 3N141 DUAL-GATE MOSFET

The total drain current of a dual-gate MOSFET can be expressed:

$$i_d = gfs_1 v_{G1} + gfs_2 v_{G2} \tag{1}$$

Both transconductances, gfs_1 and gfs_2, are functions of their respective gate biases, V_{G1} and V_{G2}, as illustrated in the specification sheet (RCA file number 285) for the 3N141 MOSFET. From the curves of Figure 16, it can be seen that for a gate No. 2 bias between zero and 1 volt, the transconductance between gate No. 1 and source (gfs_1) can be approximated by a straight line, $gfs_1 = 3.1 + 3.7\ V_{G2}$ millimhos (2)

and the transconductance between gate No. 2 and source (gfs_2) is given by the straight line, $gfs_2 = 4.6 + 3.5\ V_{G1}$ millimhos (3)

If d-c bias points $V_{G2} = 0.6V$ and $V_{G1} = -0.75V$ are picked, we then have by substitution into (2) and (3) :

$$gfs_1 = 5.3 + 3.7\, v_{G2} \tag{4}$$

$$gfs_2 = 2.2 + 3.5\, v_{G1} \tag{5}$$

Where v_{G2} and v_{G1}, are the a-c components at the respective gates.

Now, by substitution in equation (1) we obtain:

$$i_d = 5.3\, v_{G1} + 2.2\, v_{G2} + 7.2\, v_{G1} v_{G2} \tag{6}$$

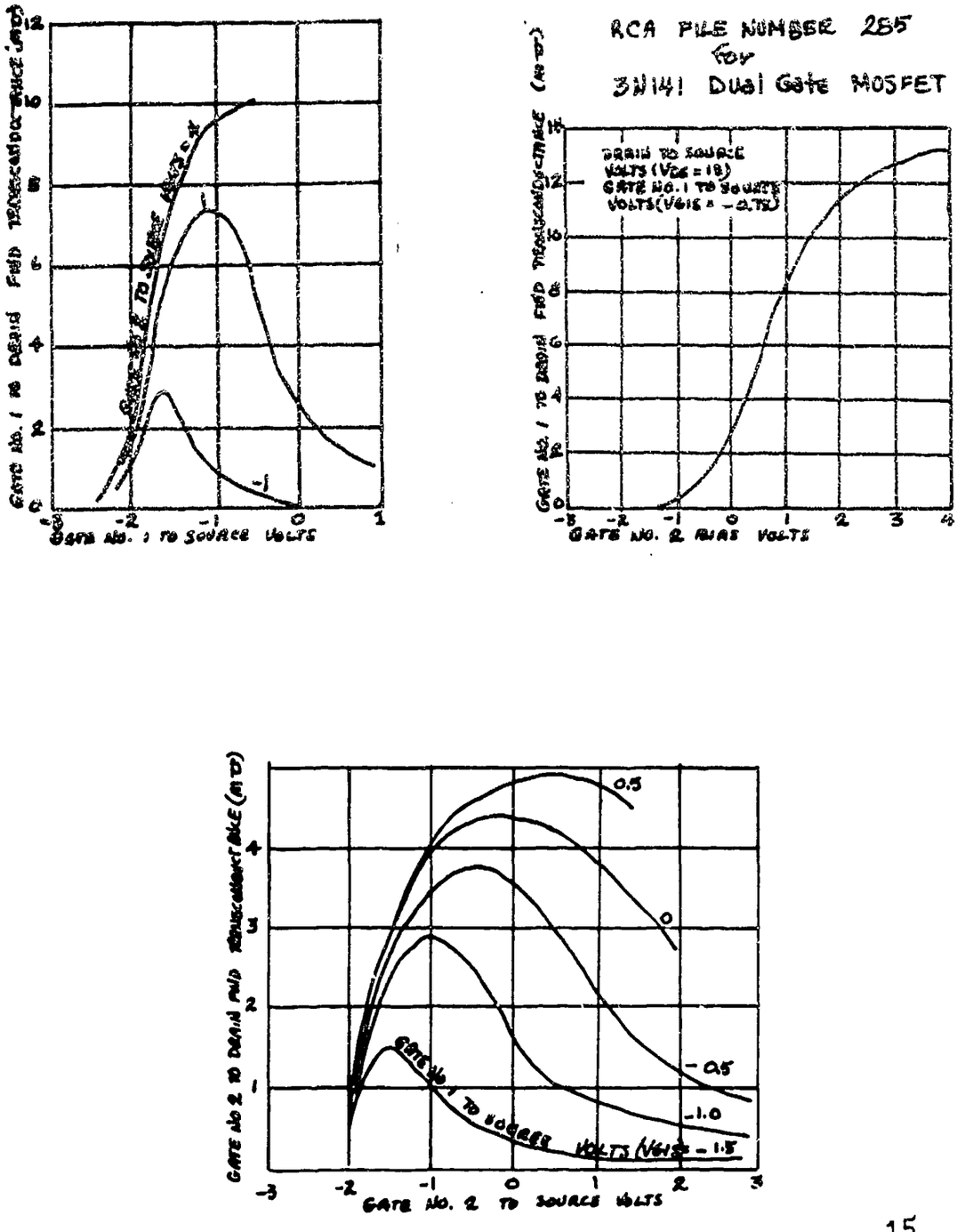

FIGURE 16. Typical Transconductance Curves for 3N141 MOSFET.[15]

The applied signals are:

$$v_{G1} = E_c \sin \omega_c t$$
$$v_{G2} = E_s \sin \omega_s t$$

Therefore, the drain current can be expressed:

$$i_d = 5.3\, E_c \sin \omega_c t + 2.2\, E_s \sin \omega_s t$$
$$+ 7.2\, E_c E_s \left[\tfrac{1}{2} \cos (\omega_c + \omega_s) t + \tfrac{1}{2} \cos (\omega_c - \omega_s) t \right] \qquad (7)$$

By filtering the output, the carrier, ω_c, and the two sidebands ($\omega c + \omega s$) and ($\omega c - \omega s$) are available to drive the output stages of the transmitter.

APPENDIX B

SUNDRY EXPERIMENTAL PROCEDURES

Procedure 1: Measurement of Electrode-Body Impedance

Due to the critical nature of the electrode-body interface with respect to application pressure, three different methods of impedance measurement were employed in an attempt to define the electronic load on the transmitter.

a. Trial and Error Synthesis

A 100 kHz square-wave signal was applied to the electrode-body configuration in series with a small resistor. A dual Channel oscilloscope presentation of the voltage across the resistor was observed. Assuming a series R-C type load, a variable resistor and capacitor were placed in a similar circuit in place of the electrode-body configuration. By adjusting the R and C until the oscilloscope presentations matched, an equivalent circuit of the electrode-body configuration was synthesized. (See Figure 17)

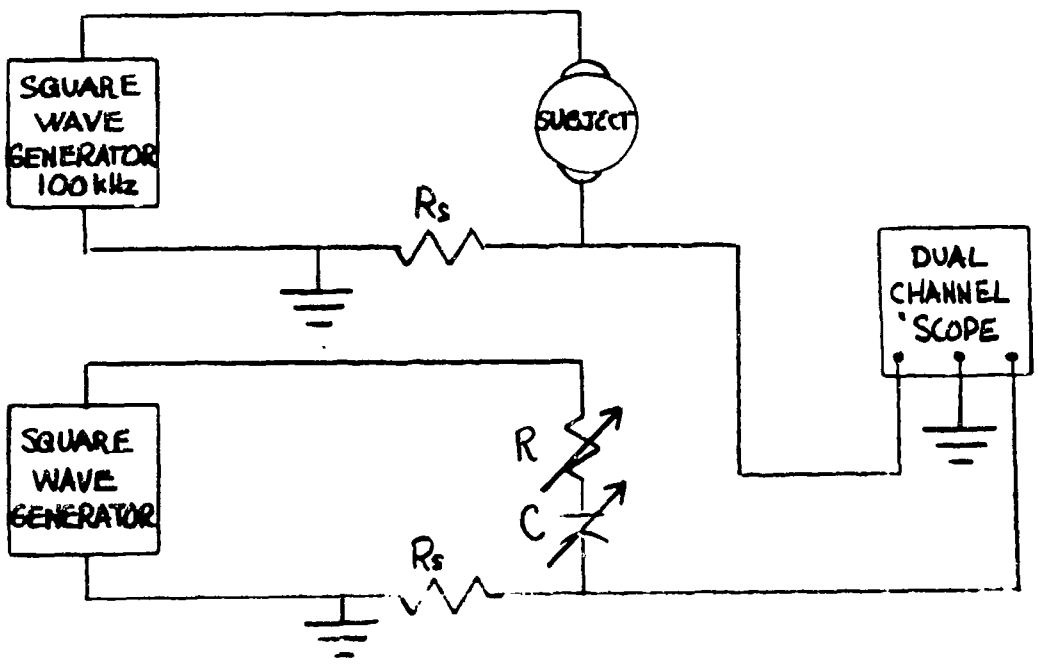

FIGURE 17. Impedance Synthesis Circuit

b. Boonton Q Meter

The Boonton 260A Q meter was employed as a means of direct measurement of the electrode-body impedance at 100 kHz. As in method a., a great deal of care was taken to find the optimum pressure of each electrode combination for maximum subjective response. The meter was resonated with the test coil and electrodes, and readings of C_1 and Q_1 were recorded. The electrode-body configuration was then added in shunt, and the meter re-resonated, yeilding C_2 and Q_2 readings. The capacitance of the interface is then the difference between C_1 and C_2 and the resistance is determined by solving the equation:

$$R_p = \frac{Q_1 Q_2}{\omega C_1 \Delta Q} \text{ ohms}$$

c. Trimmer Difference

By observing the values of trimmer capacitance required to resonate the output of the TRANS-DERMA-PHONE with and without the subject, a determination of electrode-body capacitance was obtained. The difference between the two values of the trimmer capacitor represents the amount that was added by introduction of the subject into the circuit. (See Figure 18)

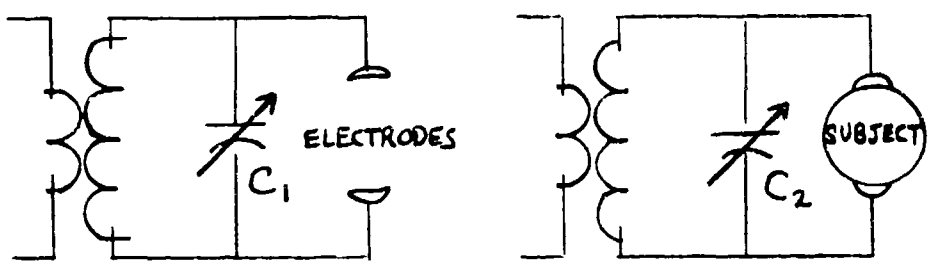

a. without subject b. with subject

FIGURE 18. Trimmer Difference Circuits

Procedure 2: Measurement of Response Threshold

The subject was placed in an anechoic chamber and fitted with the desired electrode configuration. The TRANS-DERMA-PHONE was tuned at 2 kHz audio and particular care was taken to adjust the electrodes for optimum perception.

After reducing the output level and switching to 400 Hz audio, threshold data were obtained by slowly increasing the output until sound was perceived. At the level of perception, the indicated rms voltage was recorded. This process was repeated at 100 Hz intervals up to 1 kHz and at 1 kHz intervals up through 7 kHz.

Throughout the experiment, the percentage of modulation and the value of the output tuning capacitor were held constant.

Procedure 3: Word Discrimination Test

The subject was placed in the anechoic chamber and briefly trained in the use of the fixed pair electrode. After training, and determining the proper tuning and application pressure for the head area to which the stimulus was to be applied, a balanced word list of 25 words was transmitted and the sounds which were heard by the subject were audibly voiced and scored by the operator. This procedure was performed four times at different positions on the face and head as illustrated in Figure 19. In each position, different words were used to eliminate the possibility of memory recognition.

Each word was given a weight of 4%, thus weighting each 25 word list at 100%. Scores were determined by multiplying the number of correct answers per run by the individual word weight of 4%.

The word lists were taped from a standard PB word recording specifically made for discrimination test purposes by a trained speaker. The actual words transmitted are listed on the following page.

LIST 1	LIST 2	LIST 3	LIST 4
an	you	your	and
yard	as	bin	young
carve	wet	way	cars
us	chew	chest	tree
day	see	then	dumb
toe	deaf	ease	that
felt	them	smart	die
stove	give	gave	show
hunt	true	pew	hurt
ran	isle	ice	own
knees	on	odd	key
not	law	knee	oak
mew	me	move	new
low	none	now	live
owe	jam	jaw	off
it	poor	one	ill
she	him	hit	rooms
high	skin	send	ham
there	east	else	star
earn	thing	tare	eat
twins	dad	does	thin
could	up	too	flat
what	bells	cap	well
bathe	wire	with	by
ace	ache	air	ail

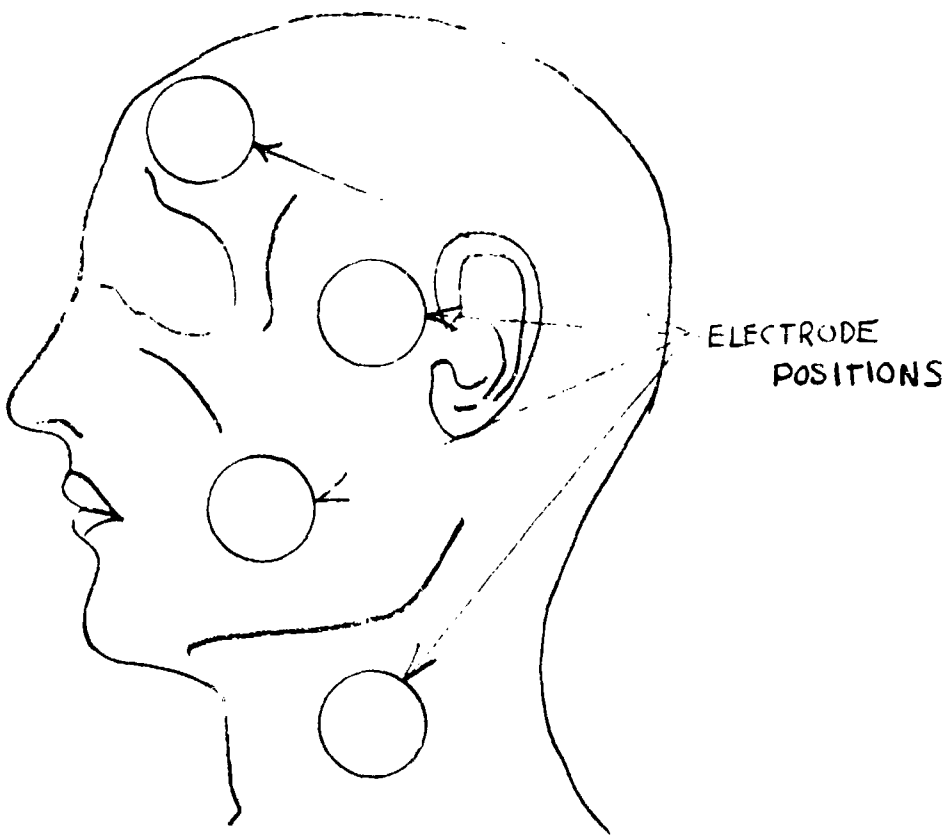

FIGURE 19. Word Discrimination Electrode Positions

APPENDIX C

PARAMETER GRAPHS

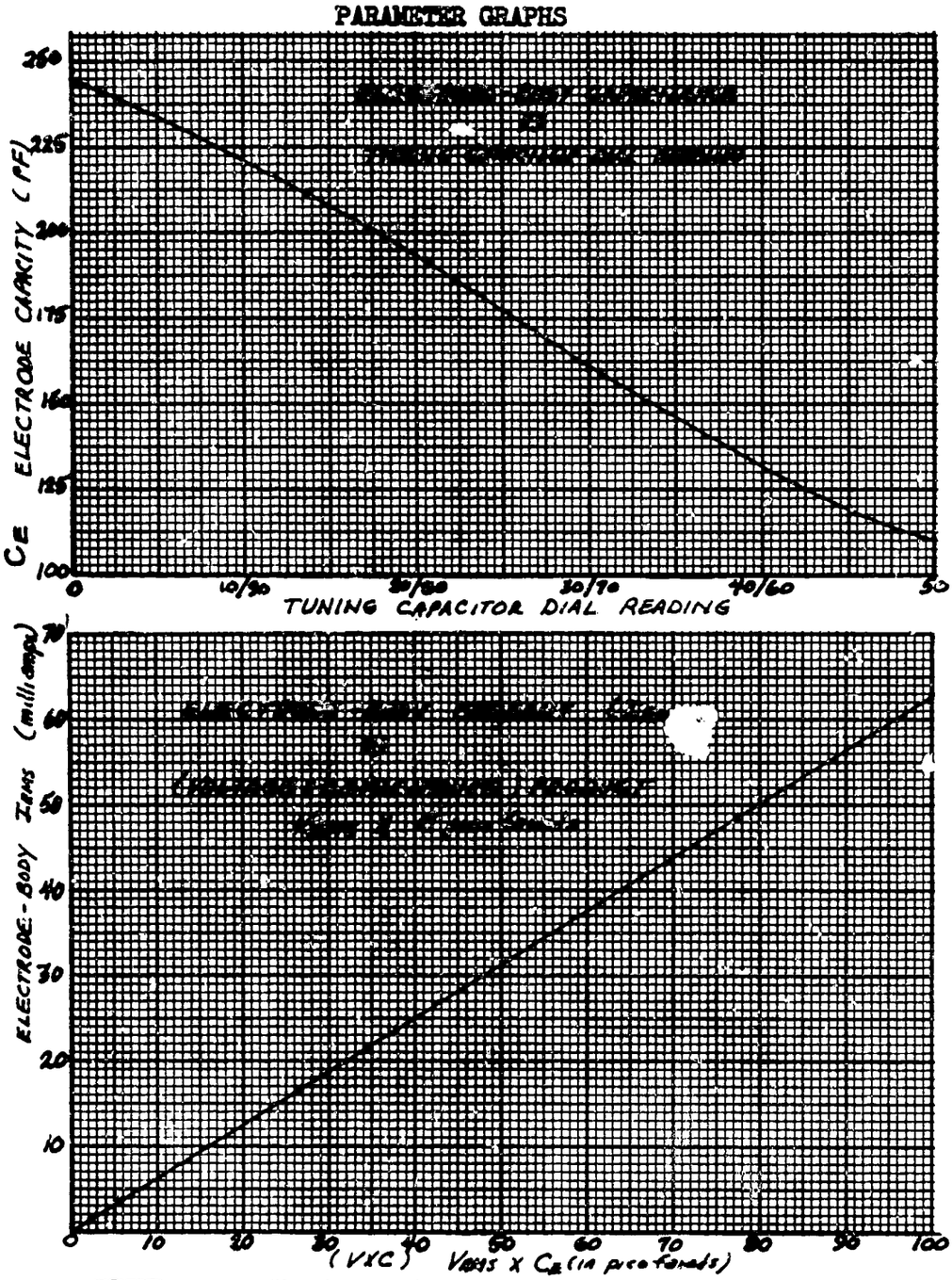

FIGURE 20. Electrode-Body Capacitance, Current Graphs

Enter upper chart with tuning dial reading to obtain the value of C_E. Multiply C_E in picofarads by the rms voltage and enter the lower chart with this product to determine approximate electrode-body rms current.

APPENDIX B

TRANS-DERMA-PHONE-PHYSICAL DESCRIPTION
AND OPERATING INSTRUCTIONS

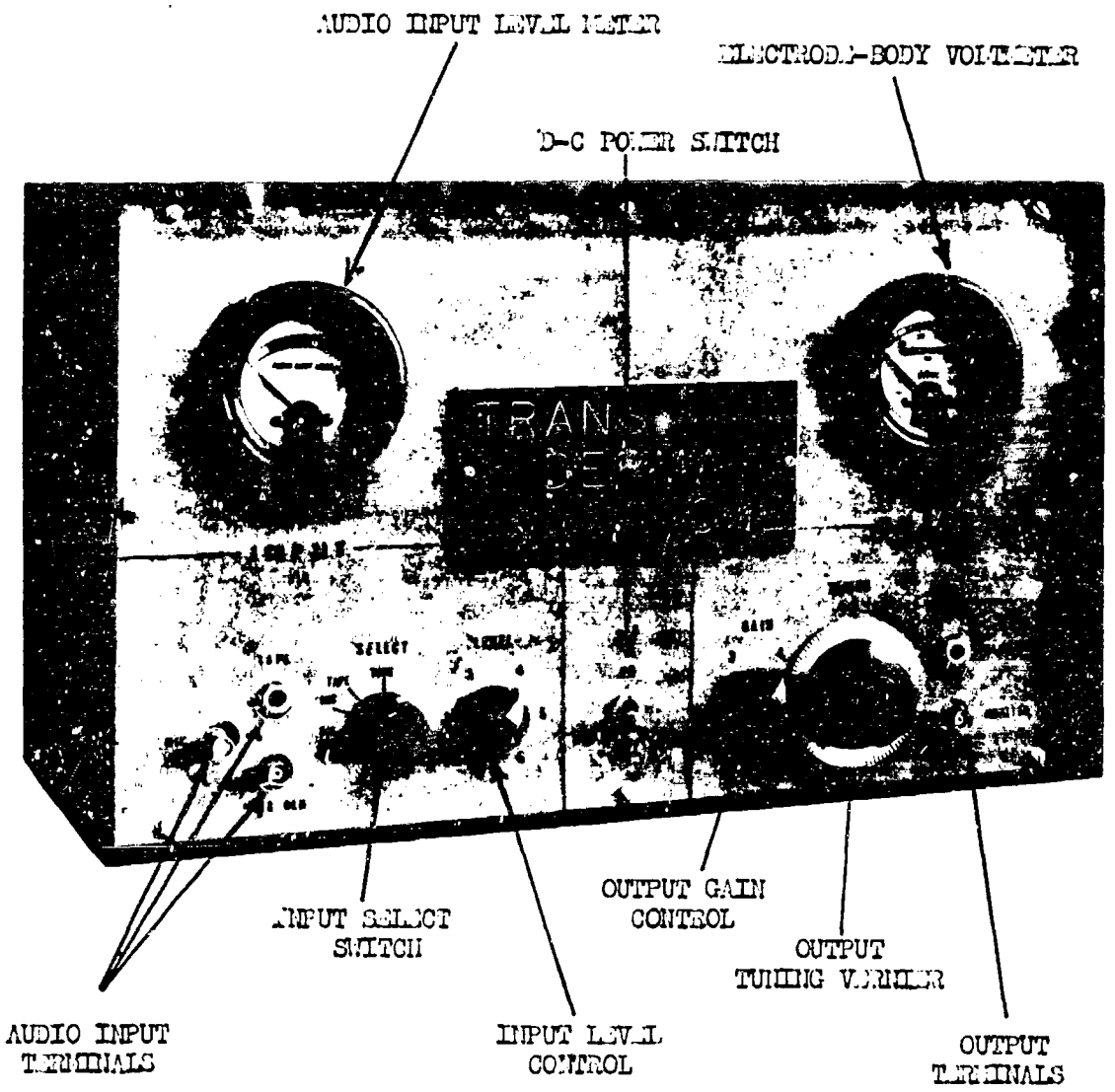

FIGURE 21. Front Panel View of TRANS-DERMA-PHONE

1. Description

a. General Description

The TRANS-DERMA-PHONE provides a 100 kHz AM stimulus to electrode-body configurations ranging in capacitance from 110 pf to 250 pf. This range is dependent primarily upon the output tuning capacitor. However, by increasing or decreasing the impedance of the output cable, different upper and lower limits can be realized. Front panel dials provide a means of monitoring both the input and output signals. Input selection and control as well as output control is provided to allow flexibility of application.

b. Panel Layout and Controls

A front view of the instrument appears in Figure 21 which shows the various controls, meters and terminal posts. The audio input-level meter is located in the upper left corner of the panel and is calibrated to provide an approximate indication of percent modulation. The dial face has two significant divisions: a green area which gives indication of 0% to 100% modulation and a red area indicating over modulation.

Below the level meter, in the area labeled INPUT, are located the input terminals, input selector and the level control. Jacks are provided for audio signal-generator output, tape-recorder pre-amplifier output and microphone output. (microphone circuitry is not wired in this model) The input select switch is a four-position switch which allows choice of input signals as well as an internal tone of approximately 1.7 kHz. Input level is set for the desired degree of modulation by the level control.

In the upper right corner of the panel is located the electrode-body voltmeter, which provides a continuous reading of unmodulated carrier rms volts across the electrode-body configuration. Below this meter in the

area labeled, OUTPUT, are found the output terminal posts, and the gain and tuning controls. The same output signal is available at both the electrode and the monitor terminals. Two terminals are provided to accomodate external monitoring of the stimulus. The magnitude of the output signal, independent of input level, can be varied by the output gain control. To compensate for various electrode configurations and application conditions, the tuning vernier is provided. This vernier is so calibrated that by entering the parameter graphs with the dial reading, a value of electrode-body capacitance and rms current can be obtained.

The d-c power switch is located in the lower center of the front panel.

2. Specifications

INPUT IMPEDANCE
50,000 ohms

R.F. FREQUENCY
100 kHz

MODULATION FREQUENCY RESPONSE
200 Hz to 5,000 Hz

MODULATION PERCENTAGE
Controllable to 100%

MODULATING VOLTAGE
150 millivolts rms (preferable)

ELECTRODE VOLTAGE
400 volts rms unmodulated

TUNING RANGE
110 pF to 250 pF, electrode-body capacity

SPECIAL FEATURE
1.7 kHz internal tone oscillator for audio modulation signal

ACCESSORIES
1 - 6′ output cable - RG 62 coax.
1 - 3′ input cable - RG 58 coax.
1 - 3′ input cable - shielded audio type
1 set - 1/2 mil electrodes (1", 3/4", and 1" diameter)
1 set - 1 mil electrodes (1", 3/4", and 1/2" diameter)

1 - fixed-concentric-pair electrode (1 mil)
1 - adjustable-concentric-pair receptacle (1 mil)
1 pair - single disc receptacles
2 - application wands

RELATED EQUIPMENT
(non furnished)
1 Wallensak 1500SS tape recorder
1 Model HP 200 AB audio oscillator
1 TEKTRONIX 504 oscilloscope

TRANSISTOR COMPLEMENT
1 - 2N736
1 - 3N141
1 - 40468
1 - 2N3710
1 - TIP 27
1 - 2N3417

POWER SUPPLIES
1 - 12 volt, 125 ma module
1 - 100 volt, 500 ma module

SIZE
Height 11 1/2", Width 19 1/2", Depth 7 3/4"

WEIGHT
33 lb.

3. Operating Instructions

a. General

The related equipment and the desired electrode configuration should be connected at their proper terminals prior to turning on the instrument. After allowing a short warmup period, the electrode configuration should be comfortably fitted to the subject's head. Particular care should be taken at this time to properly adjust the application pressure to maximum subjective response. For this purpose it is recommended that a 2 kHz tone or the internal tone be used as a reference signal. Best results in output response have been obtained when the input level is set to approximately 80% modulation and the output gain is well above the normal threshold. (gain control setting between 3 and 4) When using the internal tone,

the level control must be adjusted for peak-level input in order to provide a stable tone. (level setting about 4) The peak output of the internal oscillator has been set to provide approximately 80% modulation. After the desired electrode fit is obtained, further optimization of the stimulus signal can be accomplished by peaking the output voltage with the tuning control. This operation can be observed on the meter and the oscilloscope as well as by the subject, who should experience a more intense tone. Once the TRANS-DERMA-PHONE and the subject are matched to one another the desired input signal can be selected and experimental procedures may be executed.

In the case of a taped input, care must be taken to provide a properly modulated stimulus signal. Over modulation can be detected by observing the input-level meter and the monitoring oscilloscope. A garbled or distorted stimulus will also be perceived, but this is not a positive indicator. If over modulation is occurring, a bright horizontal line will be observed in the center of the oscilloscope display and the input-level needle will remain in the red area an excessive amount of time. To correct this situation, the level control must be adjusted or the output of the recorder reduced.

b. Operating Precautions

It is always good practice to cut the d-c power off when exchanging electrodes to prevent either damage to the instrument or r-f shock to the operator. Also, the d-c power should never be energized with the electrodes fitted, since the possibility exists of large transient bursts of energy in the output. The subject should take care not to touch the ground or common of the system, as this will short the TRANS-DERMA-PHONE output. To best satisfy this requirement it is recommended that the operator and the subject not be one and the same.

Electrodes should be visually inspected prior to each use to ensure the integrity of the dielectric. A ruptured dielectric could cause electrical tickle or a mild r.f. burn. Since no vibration or electrical sensation is observed in normal operation, any dielectric breakdown will be readily noted. Subjects should be advised to remove the electrodes upon experiencing any abnormal or uncomfortable sensation.

4. Adjustment and Calibration

It is expected that very little adjustment or calibration will be necessary unless replacement of either the modulator transistor or the power transistor becomes necessary. In this case, three adjustments are provided on the back of the instrument chassis as shown in Figure 22.

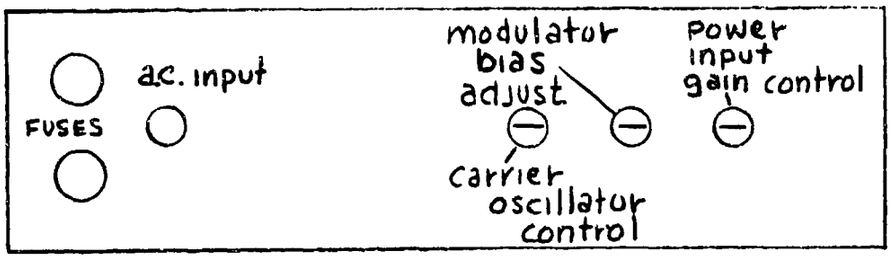

FIGURE 23. Back Face of TRANS-DERMA-PHONE Chassis

The carrier oscillator control is a screw driver adjustment which simply controls the magnitude of the carrier signal to the modulator gate number 1. Even in the case of a change of modulator transistor, only very small adjustments will be necessary; therefore a reference position of the control should be noted prior to change.

By proper adjustment of the oscillator control and the modulator bias adjust, the optimum modulator output can be obtained. As in the case of the oscillator control, the bias adjust is a fine adjustment.

The power-input gain control provides a means of adjusting the signal amplitude injected at the base of the output transistor. This control is adjusted to give maximum undistorted output to the electrode-body configuration.

Other adjustments which can be made are: meter calibrations, modulator tank tuning, and internal tone gain. The meter calibrations are made by screw driver adjustment of the potentiometers located on the inside back face of the front panel in the proximity of each meter. Gain control of the internal tone generator is accomplished by adjustment of R25, which is mounted on the circuit board. This adjustment is also a fine adjustment, and maladjustment will destroy oscillation altogether. The modulator tank can be tuned by adjusting the slug position in coil L_2. (See Appendix E)

Although no requirement exists at present, the frequency of the carrier oscillator can be decreased by changing the slug position in coil L_1. (Note: any change in carrier frequency will necessitate changes in coupling and bypass capacitors throughout the circuit for efficient operation.)

APPENDIX E. TRANS-DERMA-PHONE
Circuit Diagrams

FIGURE 23. Complete Circuit

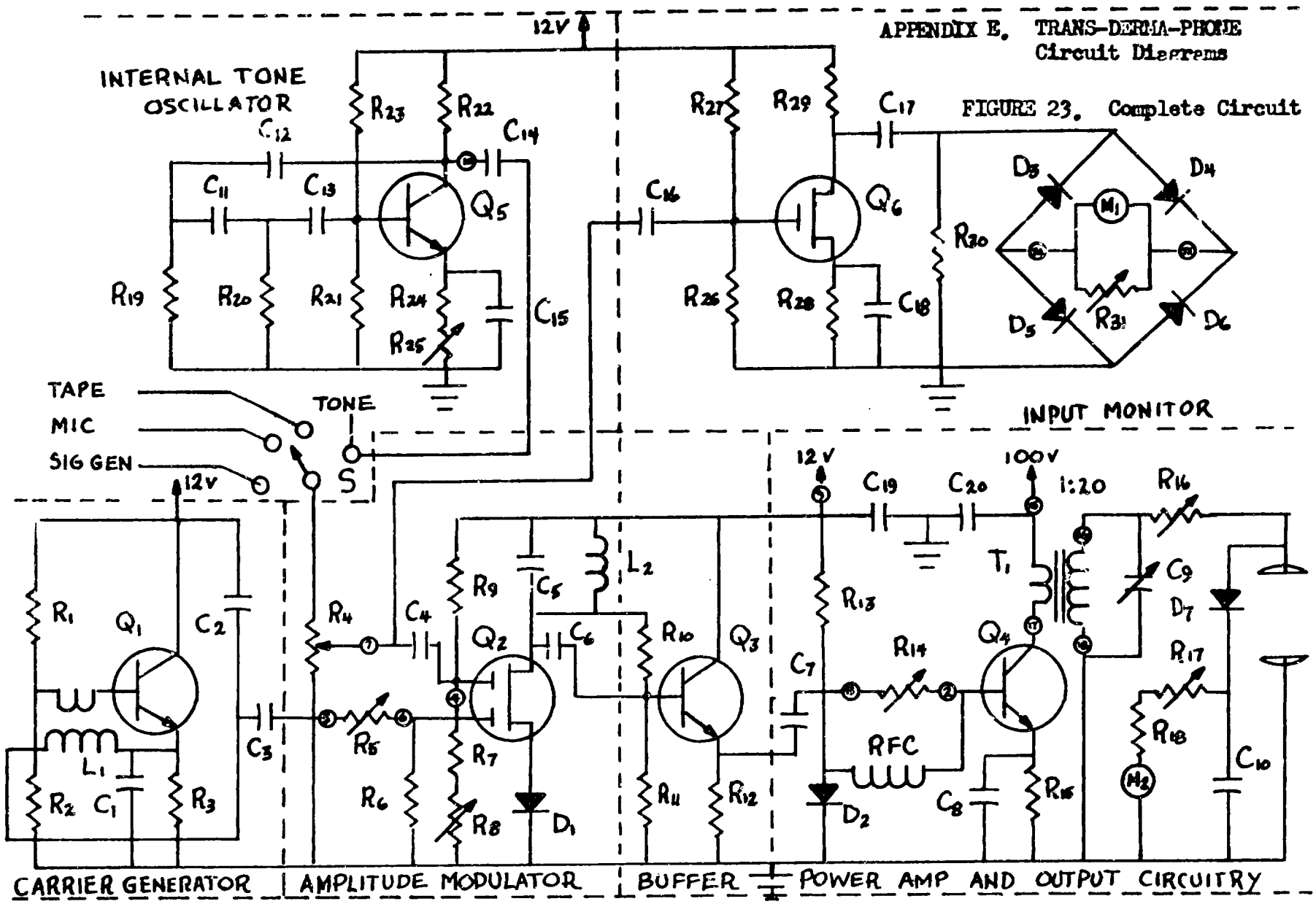

COMPONENT VALUES

R_1	39K	C_{15}	50
$R_{2,23,30}$	51K	C_{17}	6
$R_{3,24,29}$	2K	C_{18}	2
R_4	600K	$C_{19,20}$	100
R_5	2M		
R_6	2.4M	$D_{1,2}$	Si
R_7	22L	D_{3-6}	1N126
R_8	50K	D_7	1N1733
R_9	750K		
R_{10}	240K	Q_1	2N3417
R_{11}	560K	Q_2	3N141
R_{12}	3.6K	Q_3	2N736
R_{13}	10K	Q_4	TIP 27
R_{15}	22	Q_5	2N3710
R_{16}	7.5K	Q_6	40468
R_{17}	1M		
R_{18}	11M	L_1	50-100mh
R_{19-22}	11K	L_2	990μh-1.87mh
R_{25}	5K		
R_{26}	4.7M	$M_{1,2}$	50μamp d-c
R_{27}	22M		
R_{31}	100K		

$C_{1,8}$	50
C_2	.003
C_3	360pf
$C_{4,16}$	.025
C_5	500pf
C_6	300pf
C_7	10
C_9	20-160pf
C_{10}	2.5pf
C_{11-14}	.0033

NOTES:

1. All capacitances are in microfarads unless otherwise stated.

2. Circled numbers on both diagrams depict pin connections on the plug in circuit board.

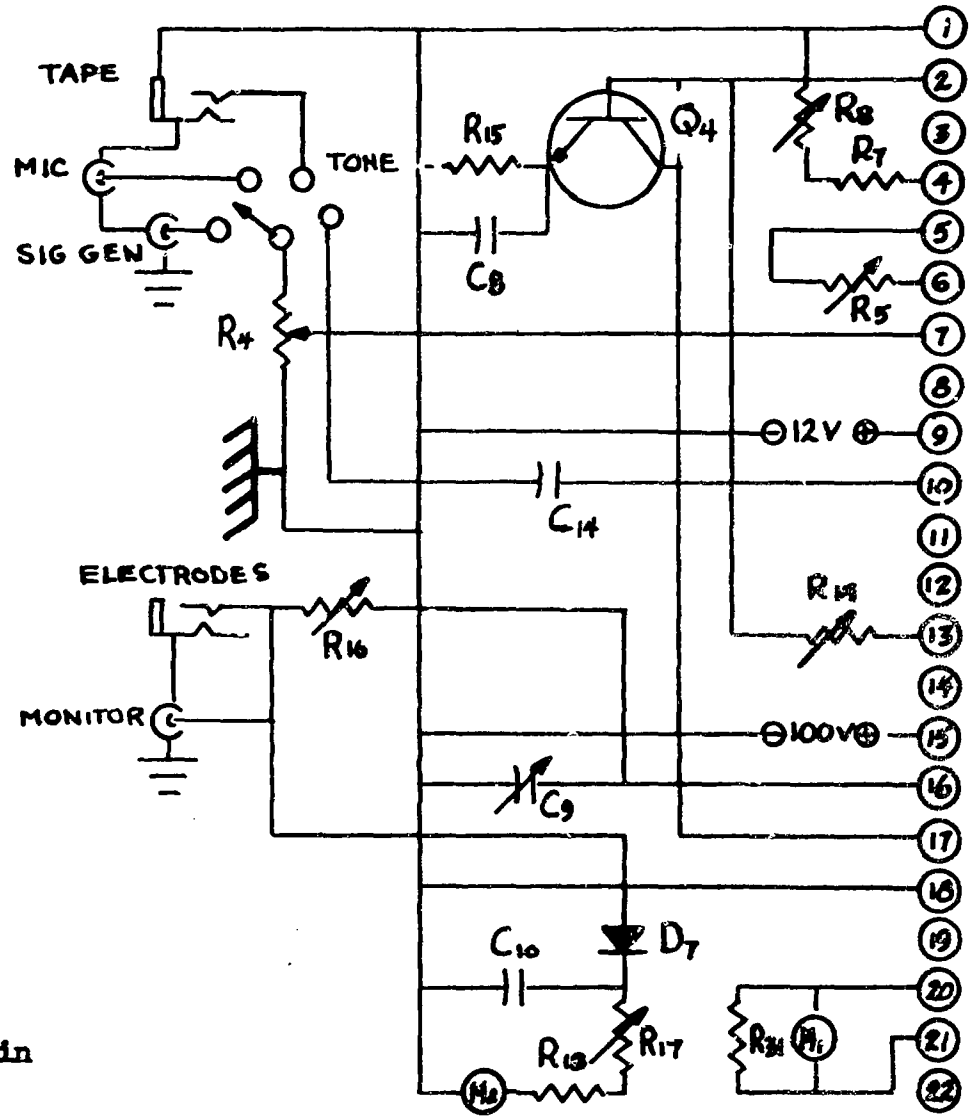

FIGURE 24. Circuitry External to Plug in Circuit Board

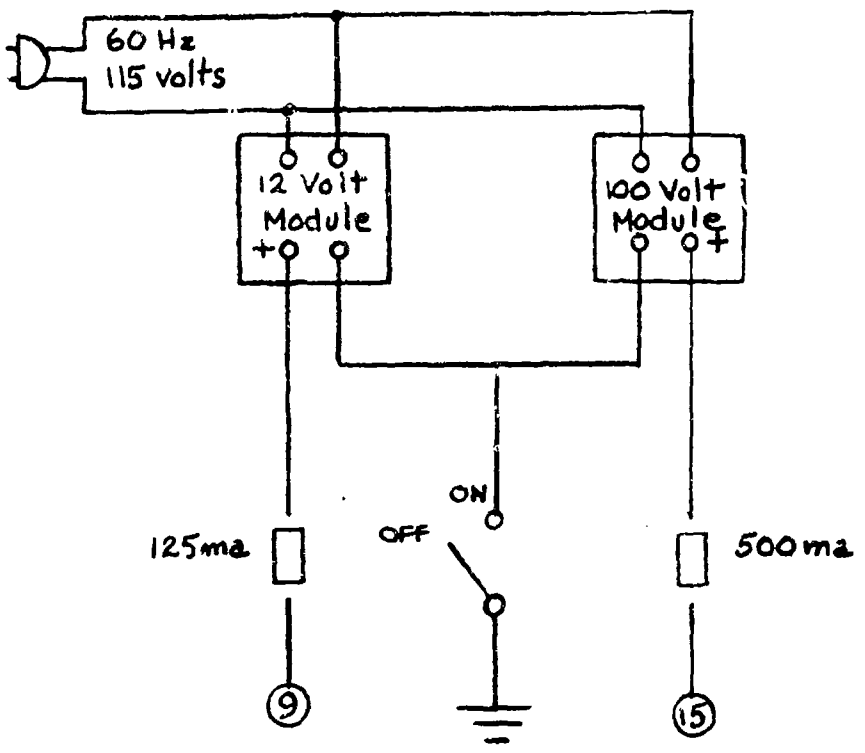

FIGURE 25. Power Distribution Circuit

Unclassified
Security Classification

DOCUMENT CONTROL DATA - R & D

(Security classification of title, body of abstract and indexing annotation must be entered when the overall report is classified)

1. ORIGINATING ACTIVITY (Corporate author)

Naval Postgraduate School
Monterey, California 93940

2a. REPORT SECURITY CLASSIFICATION

2b. GROUP

3. REPORT TITLE

THE TRANS-DERMA-PHONE - A RESEARCH DEVICE FOR THE INVESTIGATION OF RADIO-FREQUENCY SOUND STIMULATION

4. DESCRIPTIVE NOTES (Type of report and inclusive dates)

5. AUTHOR(S) (First name, middle initial, last name)

LT Garland Frederick Skinner

6. REPORT DATE

September 1968

7a. TOTAL NO. OF PAGES

60

7b. NO. OF REFS

15

8a. CONTRACT OR GRANT NO.

b. PROJECT NO

c.

d.

9a. ORIGINATOR'S REPORT NUMBER(S)

9b. OTHER REPORT NO(S) (Any other numbers that may be assigned this report)

10. DISTRIBUTION STATEMENT

This document is subject to special export controls and each transmittal to foreign governments or foreign nationals may be made only with prior approval of the Superintendent Naval Postgraduate School, Monterey, California 93940.

11. SUPPLEMENTARY NOTES

12. SPONSORING MILITARY ACTIVITY

Naval Postgraduate School
Monterey, California 93940

13. ABSTRACT

Electrophonic hearing, stimulated by the passing of an audio-frequency current through various electrodes attached to the body, has previously been studied. More recently, transdermal stimulation, a means of electromagnetic excitation utilizing an amplitude-modulated radio-frequency stimulus applied through insulated electrodes, has received attention. Claims of sound transmission directly to the brain via this method have prompted several research efforts. Although most of the results tend to disprove the claims, they have not been conclusive. Further investigation of the transdermal mechanism is warranted. The purpose of this work is to design and construct a device especially for research of transdermal hearing. The TRANS-DERMA-PHONE, an amplitude-modulated, 100 kHz transmitter, is the end product of this endeavor. A complete description of this apparatus is presented in this paper, as well as an introduction to the phenomenon known as transdermal stimulation.

DD FORM 1 NOV 65 1473 (PAGE 1)

S/N 0101-807-6811

Unclassified
Security Classification

A-31408

59 60 ___ ___
blank pages.

Unclassified
Security Classification

14 KEY WORDS	LINK A ROLE	LINK A WT	LINK B ROLE	LINK B WT	LINK C ROLE	LINK C WT
Electro-phonic stimulation						
Transdermal stimulation						
Radio-frequency stimulation						

DD FORM 1 NOV 65 1473 (BACK)
S/N 0101-807-6821

Unclassified
Security Classification

A-31409