UNCLASSIFIED

AD NUMBER

AD-851 518

CLASSIFICATION CHANGES

TO **UNCLASSIFIED**

FROM **CONFIDENTIAL**

AUTHORITY

DD 254 MSCG WS107A; May 14, 1965 by Richard J. Cook
per Document Markings

19991004329

THIS PAGE IS UNCLASSIFIED

UNCLASSIFIED

AD NUMBER

AD-851 518

NEW LIMITATION CHANGE

TO

DISTRIBUTION STATEMENT: A

Approved for public release; Distribution Unlimited.

LIMITATION CODE: 1

FROM No Prior DoD Distr Scty Cntrl St'mt Assgn'd

AUTHORITY

SAMSO Ltr; Mar 20, 1972

THIS PAGE IS UNCLASSIFIED

UNCLASSIFIED

[redacted]

REPORT NO. AE60-0653
DATE 20 October 1960
NO. OF PAGES 48

AD851518

GENERAL DYNAMICS | ASTRONAUTICS

WS-107A-1

INSTRUMENTATION CONFIGURATION

OPERATIONAL SYSTEM TEST FACILITY NO. 2

VAFB

This document is subject to special export controls and each transmittal to foreign governments or foreign nationals may be made only with prior approval of: Hq. SAMSO, LA., Ca. 90045 Attn: SMSD

Classification Changed To:
UNCLASSIFIED
Authorized By: DD 254 MSCG Date 5-14-65
Dept. WS107A Date
Reclassified By: Richard J Cook 1301 [illegible]

DDC
MAY 7 1969

PREPARED BY TEST PLANNING GROUP

APPROVED BY H. R. MacDonald
H. R. MacDonald
Test Planning

CHECKED BY T. M. Wooster
T. M. Wooster
Instrumentation

APPROVED BY P. J. Lynch
P. J. Lynch
Chief-Field Test Engineering

GR. 4
DOWNGRADED AT 3 YEAR INTERVALS; DECLASSIFIED AFTER 12 YEARS
DOD DIR 5200.10

GD

[redacted]

UNCLASSIFIED

Reproduced From Best Available Copy

Instrumentation Configuration Report

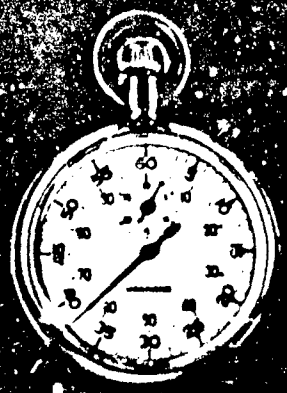

AE60-0653
OSTF NO. 2

AD851518

REPORT AE60-0653
PAGE NO. A

WS-107A-1
INSTRUMENTATION CONFIGURATION
OPERATIONAL SYSTEM TEST FACILITY NO.2
VAFB

REVISIONS

NO.	DATE	BY	CHANGE	PAGES AFFECTED
B	12 JUL 61	RTL	Change company name	Title, i thru vi,
				all revised pages
			UPDATE:	
			Text to include program changes:	
			ECP1090, ECP1452, S.O. 142-1-3,	i thru x
			Definition of Part 2 program	Section I thru IV
			All illustrations	Section 7
			All tabulations	Sections 8, 9, 10
			IBM Code Key	Section 13
			SB [illegible] HRM [illegible]	

FORM NO. A-701-1

UNCLASSIFIED

INSTRUMENTATION PLAN
FOR
OPERATIONAL SYSTEM TEST FACILITY
VAFB

REVISIONS

NO.	DATE	BY	CHANGE	PAGES AFFECTED
C	6 DEC 61	WJH	Program Summary	viii
			Discussion of Instrumentation to	1-1 thru 1-7
			reflect program changes	2-1 thru 2-25
			Data Gathering Systems	3-1 thru 3-
			Illustrations	7-1,3,5,7,8,9,10
				11,12,18,20,21
			Tabulations to reflect program changes	Sections 8,9,10
			IBM Code Key	Section 13
			ADDED:	
			GOX Vent System discussion	2-12
			Illustrations of Crib Drop Accelero-	2-15 thru 2-20
			meters	
			DELETED:	
			Countdown Instrumentation	Section 12
			[illegible]	

FORM NO A-701-1

UNCLASSIFIED

BLANK PAGE

GENERAL DYNAMICS | ASTRONAUTICS

INSTRUMENTATION PLAN

FOR

OPERATIONAL SYSTEM TEST FACILITY
VAFB
REVISIONS

NO.	DATE	BY	CHANGE	PAGES AFFECTED
D	6 JULY 62	WEB	Program Summary	Viii and ix
			Discussion of Instrumentation to	1-9 and
			reflect program changes	2-27
			Tabulations to reflect program	Sections 8,9,10
			changes	
			ADDED:	
			IRSS modification discussion	1-9
			Recoverable camera Pod discussion	
			Lift-Off cameras discussion	
			Launch control instrumentation	2-27
			discussion	
			Silo Ambient Pressure Instrumentation	
			Bendix Inverter Instrumentation	
			Trailing Wire Instrumentation discussion	
			[illegible]	

FORM NO. A-701-1

UNCLASSIFIED

INSTRUMENTAION PLAN

FOR

OPERATIONAL SYSTEM TEST FACILITY
VAFB
REVISIONS

NO.	DATE	BY	CHANGE	PAGES AFFECTED
E	26 Sept62	WEB	Program Summary	viii and ix
			Tabulations to reflect program changes	Sections 8,9,10
			ADDED:	
			Pressure Pulse Instrumentation	1-13
			Deleted:	
			Crib Drop Test Instrumentation	2-11 and 2-12
			[illegible] A.T.K.	
			[illegible] 9/26/62	
			[illegible] for DLF 9/26/62	

FORM NO. A-701-1

[redacted]

UNCLASSIFIED

FOREWORD

This report is prepared at the direction of U.S. Air Force Ballistic System Division by Letter Contract NO. AF04(647)-453.

This report provides the integrated instrumentation requirements and details necessary to accomplish programs described in Astronautics Report AE60-0807, "Integrated Test Plan for WS107A-1 Operational System Test Facility OSTF-2 Category II," prepared by Test Planning, Dept. 370-1. This report will be considered the primary source of information related to instrumentation for the OSTF-2 program. Instrumentation of integrated equipment of Associate Contractors is included. All changes or additions to the instrumentation will be indicated in revisions to this report, after coordination with Instrumentation Planning, Dept. 370-1.

THIS MATERIAL CONTAINS INFORMATION AFFECTING THE NATIONAL DEFENSE OF THE UNITED STATES WITHIN THE MEANING OF THE ESPIONAGE LAWS, TITLE 18, U.S.C., SECTIONS 793 AND 794, THE TRANSMISSION OR REVELATION OF WHICH IN ANY MANNER TO AN UNAUTHORIZED PERSON IS PROHIBITED BY LAW.

[redacted]

UNCLASSIFIED

This page intentionally left blank.

THIS MATERIAL CONTAINS INFORMATION AFFECTING THE NATIONAL DEFENSE OF THE UNITED STATES WITHIN THE MEANING OF THE ESPIONAGE LAWS, TITLE 18, U.S.C., SECTIONS 793 AND 794, THE TRANSMISSION OR REVELATION OF WHICH IN ANY MANNER TO AN UNAUTHORIZED PERSON IS PROHIBITED BY LAW.

~~CONFIDENTIAL~~

TABLE OF CONTENTS

	PAGE
FOREWORD	i
TABLE OF CONTENTS	iii
LIST OF ILLUSTRATIONS	v
INTRODUCTION	vii
OSTF-2 PROGRAM INSTRUMENTATION SUMMARY	viii
I. DISCUSSION OF MISSILE INSTRUMENTATION	1-1
General	1-1
Propulsion	1-2
Propellant Utilization	1-3
Airborne Pneumatics	1-3
Missile Airframe	1-3
Flight Control	1-4
A. Autopilot	1-4
B. Guidance	1-4
Re-entry Vehicle	1-7
Revision D Changes Missile	1-9 (D)
Revision E.Change	1-13 (E)
II. DISCUSSION OF FACILITY INSTRUMENTATION	2-1
Communication Systems	2-1
Launch Control	2-2
Propellant Loading	2-4

THIS MATERIAL CONTAINS INFORMATION AFFECTING THE NATIONAL DEFENSE OF THE UNITED STATES WITHIN THE MEANING OF THE ESPIONAGE LAWS, TITLE 18, U.S.C., SECTIONS 793 AND 794, THE TRANSMISSION OR REVELATION OF WHICH IN ANY MANNER TO AN UNAUTHORIZED PERSON IS PROHIBITED BY LAW.

~~CONFIDENTIAL~~

TABLE OF CONTENTS (Continued)

	PAGE
A. Fuel	2-4
B. Liquid Oxygen	2-6
C. Liquid Nitrogen/Helium	2-8
D. Gaseous Nitrogen	2-9
Air Conditioning	2-10
A. Facility Heating, Ventilating and Air Conditioning	2-10
B. Pod Cooling	2-11
C. Engine Compartment Environment	2-11
Gox Vent System	2-12
Launch Platform	2-12
Load Cells and Facility Missile	2-14
Missile Loft Systems	2-21
A. General	2-21
B. Launch Platform Driving Mechansim	2-21
Launch Platform Locking System	2-22
Door Closure System	2-23
Crib Locking System	2-23
Facility Hydraulic Power System	2-23
Hydraulic Pumping Unit	2-24
Facility Power	2-25
Revision D Changes Facility	2-27 (D)

THIS MATERIAL CONTAINS INFORMATION AFFECTING THE NATIONAL DEFENSE OF THE UNITED STATES WITHIN THE MEANING OF THE ESPIONAGE LAWS, TITLE 18, U.S.C., SECTIONS 793 AND 794, THE TRANSMISSION OR REVELATION OF WHICH IN ANY MANNER TO AN UNAUTHORIZED PERSON IS PROHIBITED BY LAW.

~~CONFIDENTIAL~~

TABLE OF CONTENTS (Continued)

		PAGE
III.	DATA GATHERING SYSTEMS	3-1
	General	3-1
	FM	3-1
	Digital	3-2
	Graphic Recorder	3-3
	Instrumentation Calibration	3-4
	Miscellaneous Launch Area Data	3-6
	Airborne Data Gathering System	4-1
IV.	OSTF-2 DATA SOURCES	7-1
	ILLUSTRATIONS	
	TABULATIONS	
	Master Instrumentation Log	8
	Objective Instrumentation Composite	9
	Test Plan and Recorder Assignment	10
	SEQUENCE RECORDER PEN LIST	11-1
	APPENDIX A	12-1

THIS MATERIAL CONTAINS INFORMATION AFFECTING THE NATIONAL DEFENSE OF THE UNITED STATES WITHIN THE MEANING OF THE ESPIONAGE LAWS, TITLE 18, U.S.C., SECTIONS 793 AND 794, THE TRANSMISSION OR REVELATION OF WHICH IN ANY MANNER TO AN UNAUTHORIZED PERSON IS PROHIBITED BY LAW

~~CONFIDENTIAL~~

This page intentionally left blank.

THIS MATERIAL CONTAINS INFORMATION AFFECTING THE NATIONAL DEFENSE OF THE UNITED STATES WITHIN THE MEANING OF THE ESPIONAGE LAWS, TITLE 18, U.S.C., SECTIONS 793 AND 794, THE TRANSMISSION OR REVELATION OF WHICH IN ANY MANNER TO AN UNAUTHORIZED PERSON IS PROHIBITED BY LAW

~~CONFIDENTIAL~~

INTRODUCTION

The Operational System Test Facility (OSTF-2), F Series silo at Vandenberg AFB will have instrumentation provided to support testing the weapon system as part of the overall category II program. The facility configuration is covered in Astronautics Report AE60-0306. The purpose of the OSTF-2 Category 2 program is to test the F Weapon System and to determine if any modifications are necessary to meet or improve operational requirements at the silo sites.

The areas of testing will include evaluation of Aerospace Ground Equipment (AGE), Airborne, and Facility system and subsystem performance. Operational capability will also be evaluated in terms of maintainability, reliability, and human engineering factors.

A detailed discussion of system and subsystem instrumentation will be found in the main body of this report.

THIS MATERIAL CONTAINS INFORMATION AFFECTING THE NATIONAL DEFENSE OF THE UNITED STATES WITHIN THE MEANING OF THE ESPIONAGE LAWS, TITLE 18, U.S.C., SECTIONS 793 AND 794, THE TRANSMISSION OR REVELATION OF WHICH IN ANY MANNER TO AN UNAUTHORIZED PERSON IS PROHIBITED BY LAW.

~~CONFIDENTIAL~~

OSTF-2 PART 2 PROGRAM INSTRUMENTATION SUMMARY

The test program consists of three (3) test series divided into blocks of testing. Test Series 1 is divided into the following blocks: (a) Block 0, (b) Block 1, (c) Block 1A, (d) Block 1B, and (e) Block 1C. Block 0 testing consists of three LN_2 countdowns utilizing Missile 3F. Block 1 testing, using Missile 13F, contains an inspection, two LN_2 countdowns, and three LOX countdowns. One of the LN_2 and one of the LOX countdowns also include hour hold periods. Block 1A and 1B testing comprise Operation Shotgun. Missile 57F will be used for Block 1A testing which includes an inspection, one LN_2 countdown with an hour hold, a LOX countdown, and a launch. Missile 13F will be used for Block 1B testing which includes an inspection, two LN_2 countdowns, a 5 day hold, a LOX countdown, and a launch. Block 1C testing consists of an inspection to be accomplished at 576E.

Test Series II and III are divided into two blocks of testing for each. Test Series II will utilize Missile 83F. Special testing consisting of EMI and LN_2 countdowns will be accomplished as well as ECP updatings. Test Series III as yet has not been defined for any special testing.

All Test Objectives are listed in tabular form in the Objective Instrumentation Composite, (see Section 9). In order to obtain data to fulfill these objectives, instrumentation has been assigned from the master OSTF-2 instrumentation list. Recorder assignments for the various measurements are found in the Recorder Assignment Tab, (see Section 10).

A measurement composite has been compiled and only measurements on the composite will be recorded at OSTF-2. All test objectives have been assigned instrumentation from the composite list; and where required, a priority will be assigned according to the following ground rules:

a) Priority 1 measurements are the minimum required to satisfy the objectives.

b) Priority 2 measurements are those desired for the fulfillment of the objective.

c) For any given run, the site personnel will be required to record all priority 1 measurements for the specific objectives of that run. The recording of priority 2 measurements will in general be left to the discretion of the site personnel so that recording capabilities will not be exceeded.

THIS MATERIAL CONTAINS INFORMATION AFFECTING THE NATIONAL DEFENSE OF THE UNITED STATES WITHIN THE MEANING OF THE ESPIONAGE LAWS, TITLE 18, U.S.C., SECTIONS 793 AND 794, THE TRANSMISSION OR REVELATION OF WHICH IN ANY MANNER TO AN UNAUTHORIZED PERSON IS PROHIBITED BY LAW

~~CONFIDENTIAL~~

The instrumentation system will assist in the evaluation of Technical Orders and trouble-shooting. It may be necessary for site personnel to select the parameters required for correcting problem areas. Complete information concerning the parameters, such as pick-up point, range, and recorder, along with a description of the problem requiring the instrumentation changes, should be forwarded to Test Planning, Dept. 370-1, as soon as practicable after each change for record purposes.

THIS MATERIAL CONTAINS INFORMATION AFFECTING THE NATIONAL DEFENSE OF THE UNITED STATES WITHIN THE MEANING OF THE ESPIONAGE LAWS, TITLE 18, U.S.C., SECTIONS 793 AND 794, THE TRANSMISSION OR REVELATION OF WHICH IN ANY MANNER TO AN UNAUTHORIZED PERSON IS PROHIBITED BY LAW

CONFIDENTIAL

This page intentionally left blank.

THIS MATERIAL CONTAINS INFORMATION AFFECTING THE NATIONAL DEFENSE OF THE UNITED STATES WITHIN THE MEANING OF THE ESPIONAGE LAWS, TITLE 18, U.S.C., SECTIONS 793 AND 794, THE TRANSMISSION OR REVELATION OF WHICH IN ANY MANNER TO AN UNAUTHORIZED PERSON IS PROHIBITED BY LAW

~~CONFIDENTIAL~~

DISCUSSION OF MISSILE INSTRUMENTATION

GENERAL

The instrumentation program described in this report has been coordinated with various design groups and Associate Contractors. The instrumentation requirements are based upon the following categories:

Evaluative Instrumentation - that instrumentation required to support test objectives.

Operating Instrumentation - redline and design limit measurements which are required by site personnel to monitor critical parameters during validation, integration and test operations.

Failure Analysis Instrumentation - any of the OSTF-2 program measurements may, in the event of particular types of failure, become useful in failure analysis. Therefore, measurements not specifically assigned in the above two categories are automatically classified as failure analysis instrumentation.

The ground rules used in this instrumentation program are as follows:

A. All instrumentation is to be coordinated through Astronautics Test Planning Instrumentation Group, 578-12.

B. All subsystem and Associated Contractor equipment interfaces are considered for instrumentation and instrumented where required.

C. A standardized boss is used for all pressure and temperature transducers. Measurement provision in the AGE is the reponsibility of the cognizant design group.

A design objective is that the over-all instrumentation program, including methods, techniques and procedures for human factor data collection, will allow changes of measurements with no appreciable delay or cost in testing. A complete listing of the instrumentation provided for testing at OSTF-2 is published in this report; however, instrumentation changes will be made if necessary to accomplish objectives resulting from previous runs.

THIS MATERIAL CONTAINS INFORMATION AFFECTING THE NATIONAL DEFENSE OF THE UNITED STATES WITHIN THE MEANING OF THE ESPIONAGE LAWS, TITLE 18, U.S.C., SECTIONS 793 AND 794, THE TRANSMISSION OR REVELATION OF WHICH IN ANY MANNER TO AN UNAUTHORIZED PERSON IS PROHIBITED BY LAW

CONFIDENTIAL

Three basic types of recording systems will be utilized for data gathering. Direct writing recorders will be used for quick look type analysis, sequence measurements, and operating instrumentation. An FM system will be employed for data requiring a more complete analysis. A digital system will be provided for recording measurements requiring a high degree of accuracy. Limited playback facilities will be available at the site for quick look analysis of the data, including unscaled playback of digital data. The instrumentation system is capable of handling all types of measurements including pressure (potentiometers and strain gauges), temperature (resistance bulbs and thermocouples), flow (venturi, orifice and turbine type), rotational velocity, and others that might arise. Scale factor calibration techniques will be employed to reduce the set-up time for each run

PROPULSION

The silo configuration requires that fuel be constantly stored in the missile tanks Automatic prevalves in the airborne low pressure fuel ducting keep the fuel from flowing into the engines while the missile is in standby condition. The fuel turbopump inlet pressures (P7002P, P7306P, P7055P) will be monitored to ascertain prevalve performance during the standby and flight pressurization periods.

The ability of the rapid LOX topping unit to maintain satisfactory LOX turbopump inlet conditions and to meet interface requirements will be exhibited by temperature (P7134T P7304T, P7305T) and pressure (P7907P) measurements in the LOX pump inlet ducting

During LOX tanking, gaseous and liquid oxygen flow through the turbopumps and cause the pumps to motor. If the pumps motor excessively, the preservation and lubrication materials utilized by Rocketdyne are destroyed and the pumps must be represerved. In order to determine the number and rate of turbopump revolutions, the existing missileborne tachometers will be adjusted for low range output (P7137B, P7138B) and will be connected to the landline FM recording system. Prior to flight, the tachometers must be readjusted to the normal range and reconnected to the telemetry system

Additional propulsion system instrumentation, telemetered via the IRSS, will furnish information on engine performance during flight.

THIS MATERIAL CONTAINS INFORMATION AFFECTING THE NATIONAL DEFENSE OF THE UNITED STATES WITHIN THE MEANING OF THE ESPIONAGE LAWS, TITLE 18, U.S.C., SECTIONS 793 AND 794, THE TRANSMISSION OR REVELATION OF WHICH IN ANY MANNER TO AN UNAUTHORIZED PERSON IS PROHIBITED BY LAW

CONFIDENTIAL

PROPELLANT UTILIZATION

The acoustica propellant utilization (P/U) system will be installed on those missiles allocated to the OSTF-2 facility. This system consists essentially of a sensor string portion and a computer portion. Propellant levels (fuel and lox) are sensed by ultrasonic probes and this level information is fed into the computer portion. The computer section uses these level indications and the time differences between these level indications to apply a correction voltage to the electrically controlled hydraulic servo valve which positions the main fuel valve and thus controls the fuel flow rate.

Present plans for light instrumentation for the Acoustica P/U system consists of two telemetry measurements (U113V, U135X) in the IRSS kit. Official Air Force action to add these two measurements to the IRSS kit (ECP 1260) has not been received at the time of this report.

Since the Acoustica P/U system is relatively passive during a countdown, two landline measurement (U7132X, U7125X) and instrumentation common to other systems (e.g. missile 28 volt power) will provide information for system capability. Computer reset (U7125X) will determine that a pulse has been received by the computer while station counter output (U7132X) will verify that the computer has been reset and is connected to the proper sensor pair in order to provide operational readiness.

PNEUMATICS

Missileborne helium requirements are very critical on Silo missiles due to countdown restrictions. The quantity of helium loaded will be determined by airborne pressure (F7145P, F7246P) and temperature (F7248T, F7249T, F7250T, F7290T) instrumentation in the missileborne helium storage spheres. Performance of the F Series boiloff valve will be established by the missile tank ullage (F7001P) pressure measurement.

MISSILE AIRFRAME

Eight strain gage measurements will be made on the missile to measure bending moment as the missile is raised and lowered.

THIS MATERIAL CONTAINS INFORMATION AFFECTING THE NATIONAL DEFENSE OF THE UNITED STATES WITHIN THE MEANING OF THE ESPIONAGE LAWS, TITLE 18, U.S.C., SECTIONS 793 AND 794. THE TRANSMISSION OR REVELATION OF WHICH IN ANY MANNER TO AN UNAUTHORIZED PERSON IS PROHIBITED BY LAW

CONFIDENTIAL

Each installation will consist of two gages (one hoop and one longitudinal strain) located halfway between the X and Y axes in quadrants I, II, III, and IV at Sta. 900; and in the same relative locations at Sta. 1100 as follows:

	STA 900		STA 1100	
	LONG.	HOOP	LONG.	HOOP
QUAD I	A7820S	A7533S	A7824S	A7537S
QUAD II	A7822S	A7535S	A7826S	A7539S
QUAD III	A7823S	A7536S	A7827S	A7540S
QUAD IV	A7821S	A7534S	A7825S	A7538S

FLIGHT CONTROL

The flight control system is made up of two major subsystems, the airborne autopilot system and the inertial guidance system.

A. Autopilot

Refer to General Dynamics/Astronautics document AZC-27-068, Instrumentation Configuration of Operational Missiles - IRSS, for a discussion of measurements made via the telemetry system.

The Operational Test and Automatic Launch Control Parameters document, AZM-27-452, describes those functions monitored during testing and system checkout.

B. Guidance

The following guidance instrumentation has been coordinated with the Arma Corporation and is in accordance with ARMA DAG 7764 Rev III.

THIS MATERIAL CONTAINS INFORMATION AFFECTING THE NATIONAL DEFENSE OF THE UNITED STATES WITHIN THE MEANING OF THE ESPIONAGE LAWS, TITLE 18, U.S.C., SECTIONS 793 AND 794, THE TRANSMISSION OR REVELATION OF WHICH IN ANY MANNER TO AN UNAUTHORIZED PERSON IS PROHIBITED BY LAW.

~~CONFIDENTIAL~~

All of the Arma Inertial Guidance measurements telemetered via the IRSS, except I581W are also being recorded via landline. Of these measurements the analog to analog convertor (AAC'S) (I7552D, I7528V, I7529V, I7580V, I7527X, I7521X, I7522X, and I7570X) are to be picked up at the umbilical junction box and are already conditioned to 0-5 VDC; the calibration procedure of these measurements will be supplied at a later date. The digital signal convertor (DSC) Outputs (I7505H, I7506H, I7507H, I7508H, I7509H I7502L, I7503L, I7504L and I7510W) are also picked up at the same umbilical junction box and require only one recording channel.

In addition, the following measurements are also made on landline recorders:

1. Arma String Frequencies - I7515A, I7516A, I7517A, I7518A, I7519A and I7520A. These string frequencies, two from each of the three accelerometers on the stable platform are fed directly into the airborne computer and are used to calculate missile vector velocity, position and steering functions. This measurement will be recorded on tape using a 70 KC subcarrier oscillator.

2. Optical Azimuth Signal - I7501D. This measurement is normally a null and is derived from the azimuth alignment group servo loop and indicates the azimuth with respect to polaris.

3. Roll and Pitch Pendulum - I7511D and I7512D. These measurements monitor the leveling of the guidance platform preparatory for launch and test purposes.

4. Roll, Pitch and Azimuth Memory - I7572D, I7573D and I7574D. The guidance is put on memory prior to elevator lift, and this memory capability is therefore monitored to evaluate any changes when the missile arrives at launch position.

5. Pitch, Roll and Yaw Gyro Torque - I7591C, I7592C, and I7593C. This measures the torquing signals fed to each respective gyro axis to maintain platform alignment. It compensates for earth's rotation and normal gyro drifts.

THIS MATERIAL CONTAINS INFORMATION AFFECTING THE NATIONAL DEFENSE OF THE UNITED STATES WITHIN THE MEANING OF THE ESPIONAGE LAWS, TITLE 18 U.S.C., SECTIONS 793 AND 794, THE TRANSMISSION OR REVELATION OF WHICH IN ANY MANNER TO AN UNAUTHORIZED PERSON IS PROHIBITED BY LAW.

~~CONFIDENTIAL~~

6. Pitch, Roll and Azimuth Servo Error - I7549D, I7550D and I7551D. These are measurements of the error signals in the platform servos which maintain the platform initial orientation. However, when positioned on the ground these signals should be near null.

7. Zero Lag Output #1 - I7576D. This signal is associated with the azimuth alignment loop and provides the added stability in the azimuth alignment servo loop.

8. Alignment Group Radial, Tangential and Axial Vibration - I7538O, I7539O and I7542O. These measurements monitor the vibration environment of the theodolite which is a part of the alignment group.

9. Temperature Controls Amplifier Output - I7540V. This measurement monitors the power required to maintain a fixed stable temperature of the high density fluid surrounding the spherical housings which contains the gyros, on the stable platform.

10. Twenty-One Arma Discrete Commands - I7611X thru I7628X, I7630X, I7631X, and I7637X. These measurements are self explanatory when referred to in the measurement tabulations.

11. Indication of Start Elevator and Elevator Complete. H7807X, L/P LOCK ASSY OPEN; H7812X, L/P LOCK ASSY CLOSE.

These measurements provide a time history of "Elevator Lift" environment for the AIG.

12. AIG Pod Environmental Monitors - N7032T, A7907T, I7015T, N7048T, N7156T, N7050R, N7155R, N7154T, N7046J. These measurements monitor the air flow rate, temperature, and relative humidity of the air going into B1 and B2 Pods. They also monitor the air inside the B1 and B2 Pods.

A discussion of the pod cooling instrumentation is in the air conditioning section, paragraph "B."

THIS MATERIAL CONTAINS INFORMATION AFFECTING THE NATIONAL DEFENSE OF THE UNITED STATES WITHIN THE MEANING OF THE ESPIONAGE LAWS, TITLE 18, U.S.C., SECTIONS 793 AND 794, THE TRANSMISSION OR REVELATION OF WHICH IN ANY MANNER TO AN UNAUTHORIZED PERSON IS PROHIBITED BY LAW

~~CONFIDENTIAL~~

RE-ENTRY VEHICLE

Basic Category Two (2) Tests for the Re-entry Vehicle (R/V) are a) to prove reliability, b) determine that the R/V is tactically operational, and c) evaluate the R/V as a part of the weapon system to determine operational limitations and capabilities. The units involved with R/V system evaluation are as shown below in a simplified configuration:

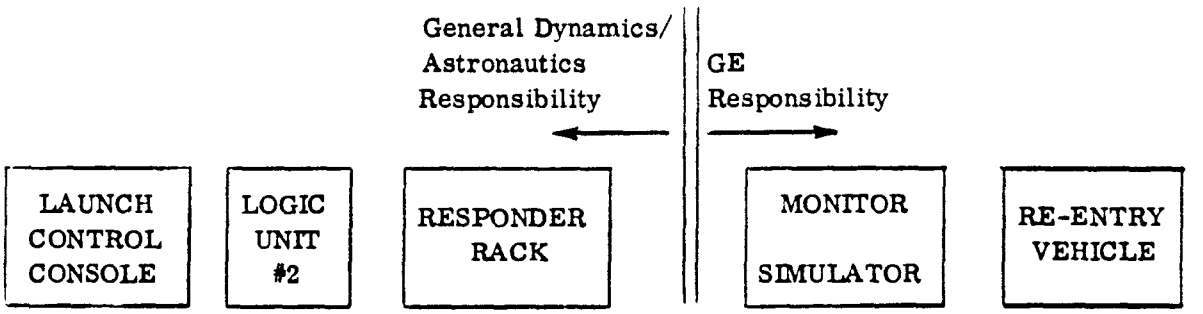

Instrumentation requirements for the Part 2 Program are listed below:

MEAS. NO.	DESCRIPTION	REMARKS
Y7052X	R/V BATT HTR THERMOST	Effective only on Mark 3-Mark 4 always shows positive signal.
Y7054X	L/C POWER	Signal is sent to Launch Control Console (LCC) from GE at countdown initiation.
Y7055X	START C/D PWR	Signal is sent from GE which indicates another bus has been switched in to provide power to select the target.
Y7056X Y7064X	28 VDC VERIFICATION 115 VAC VERIFICATION	GE initiated signals to ascertain that GE is receiving operating power from Astronautics.

THIS MATERIAL CONTAINS INFORMATION AFFECTING THE NATIONAL DEFENSE OF THE UNITED STATES WITHIN THE MEANING OF THE ESPIONAGE LAWS, TITLE 18, U.S.C., SECTIONS 793 AND 794, THE TRANSMISSION OR REVELATION OF WHICH IN ANY MANNER TO AN UNAUTHORIZED PERSON IS PROHIBITED BY LAW.

~~CONFIDENTIAL~~

MEAS. NO.	DESCRIPTION	REMARKS
Y7059X	R/V CONTINUITY (GOOD)	Determines that electrical continuity exists through the R/V circuits.
Y7068X Y7061X	MARK 3 R/V MARK 4 R/V	Identity loop to indicate that a Mark 3 or Mark 4 R/V is installed on the flight vehicle.
Y7062X	R/V TACTICAL	Signal represents a summation of a series of R/V relay closures: (a) that the GE simulator is not connected, (b) that the target selector switch is in the remote position and the "Test Power Good" switch is in the OFF position.
Y7065X	START C/D VFY	Signal received from GE acknowledging receipt of countdown initiation from the Launch Control Console.
Y7066X Y7067X	TARGET A SET TARGET B SET	Indicates that the command from the LCC (via the R/V monitor) has been set in the R/V.
Y7069X Y7070X	TARGET A SELECT TARGET B SELECT	Indicates that the R/V prelaunch monitoring set has received the target command from the LCC.
Y7071X	START C/D SIGNAL	Countdown initiation signal sent from LCC to GE.
Y7072X	+28 VDC	Generated by GD/A when +28 VDC supplied to R/V prelaunch monitor.

THIS MATERIAL CONTAINS INFORMATION AFFECTING THE NATIONAL DEFENSE OF THE UNITED STATES WITHIN THE MEANING OF THE ESPIONAGE LAWS, TITLE 18, U.S.C., SECTIONS 793 AND 794, THE TRANSMISSION OR REVELATION OF WHICH IN ANY MANNER TO AN UNAUTHORIZED PERSON IS PROHIBITED BY LAW.

~~CONFIDENTIAL~~

REVISION "D" CHANGES MISSILE

The information contained under Discussion of Missile Instrumentation, Section I should be referred to for a description of reasoning used in establishing missile instrumentation configuration.

The text is still applicable except as amended below.

IRSS MODIFICATION

The launching of Missile 66E pointed up the desirability of expanding the IRSS telemetry to provide a greater failure analysis capability. This increased capability requires the addition of three continuous and one commutated channels (IRIG channels 2, 3, 8 & 16) to the IRSS kits and provides channel space for approximately 27 additional telemetry measurements. The new baseline (effective on launches after 57F) will consist of the present instrumentation including ECP 1260 plus those measurements added by OST - ECP 8073. The measurements added include 8 pressures, 3 temperatures, 2 valve positions, 5 autopilot voltages, 1 breakwire, and 1 conax valve command voltage. One rate gyro and 2 pump speed measurements are rechannelized from commutated to continuous channels. An auxiliary signal converter will be utilized to house channel 8 and 16 and the 10 RPS commutator.

Due to the time element Missile 57F received the minimum IRSS telemetry changes compatible with launch schedule. The measurements added include 1 temperature, 1 pressure, 1 breakwire, and 1 conax valve command voltage as listed below:

A778T ENGINE COMPARTMENT AMBIENT @ SUST. HYD. PUMP
M32X CONAX VALVE COMMAND
H185P SUST. HYDRAULIC PUMP INLET PRESSURE
M185X RECOVERABLE CAMERA PKG. - EJECTION SIGNAL
MEASUREMENT P714T (B2, GAS GENERATOR COMBUSTOR) was deleted to provide channel space for A778T.

THIS MATERIAL CONTAINS INFORMATION AFFECTING THE NATIONAL DEFENSE OF THE UNITED STATES WITHIN THE MEANING OF THE ESPIONAGE LAWS, TITLE 18, U.S.C., SECTIONS 793 AND 794, THE TRANSMISSION OR REVELATION OF WHICH IN ANY MANNER TO AN UNAUTHORIZED PERSON IS PROHIBITED BY LAW.

~~CONFIDENTIAL~~

The following measurements have been added to the basic IRSS Kits (Ref. Report AZC-27-068) to form new baseline kits:

P529D	SUSTAINER MAIN LOX VALVE POSITION
P30P	VERNIER LOX TANK PRESSURE
P27P	VERNIER FUEL TANK PRESSURE
F247T	BOOSTER TANK HELIUM BOTTLES TEMPERATURE
M32X	CONAX VALVE COMMAND
S373X	BOOSTER CUTOFF
S241X	SUSTAINER CUTOFF
S376X	VERNIER CUTOFF
S248X	AUTOPILOT PROGRAMMER SW 17
S379X	FIRE RETROROCKETS
A778T	ENGINE COMPARTMENT AMBIENT @ SUST. HYD. PUMP
A743T	AMBIENT @ SUSTAINER INSTR. PANEL
H185P	SUSTAINER HYDRAULIC PUMP INLET PRESSURE
H224P	BOOSTER HYDRAULIC SYSTEM LOW PRESSURE
P830D	SUSTAINER FUEL VALVE POSITION
P337P	SUST. GAS GEN LOX INJECTION MANIFOLD
P463P	SUST. GAS GEN FUEL INJECTION MANIFOLD
P1P	B1 LOX PUMP INLET
P351P	SUSTAINER LOX INJECTION MANIFOLD
*M185X	RECOVERABLE CAMERA PKG. - EJECTION SIGNAL
G504C	MOD III PULSE BEACON MAGNETRON
G583E	MOD III RB RF OUTPUT
G594V	MOD III RATE BEACON PHASE DET

* Excluding Missile 83F.

THIS MATERIAL CONTAINS INFORMATION AFFECTING THE NATIONAL DEFENSE OF THE UNITED STATES WITHIN THE MEANING OF THE ESPIONAGE LAWS, TITLE 18, U.S.C., SECTIONS 793 AND 794, THE TRANSMISSION OR REVELATION OF WHICH IN ANY MANNER TO AN UNAUTHORIZED PERSON IS PROHIBITED BY LAW

~~CONFIDENTIAL~~

The following measurements are rechannelized from commutated to continuous channels:

P84B	B1 PUMP SPEED
P349B	SUSTAINER PUMP SPEED
S52R	ROLL RATE GYRO

RECOVERABLE CAMERA PACKAGE

A recoverable camera package (RCP) (measurement M7606N) will be installed on missiles being launched from OSTF #2. The RCP consists of a Milliken model DBM3 motion picture camera (400 frames per second) loaded with 200 feet of film (40 frames per foot); a Sylvania flash flood lamp model FF33 which burns for 1.7 seconds to provide an illumination source, and a battery to operate both lamp and camera. The camera is mounted within a carbon dioxide operated ejector tube which together with the battery and illumination source are located on the aft end of the Quad IV jettison rail. The camera lens is focused on sustainer engine hardware to optically observe and record any visual abnormality which occurs in the engine compartment region during staging. Filming and illumination of the engine compartment are initiated by a timer, which in turn is triggered by the booster engine cutoff (BECO) signal. Ten seconds after BECO, the timer initiates the gas operated ejector mechanism and the camera is jettisoned from the tube. The jettisoned camera contains a baroswitch operated para-balloon which opens at a predetermined altitude and a SARAH beacon transmitter so that camera impact location may be determined.

Design for two additional RCP's have been completed and locations have been designated as position 2 and position 3. Position 2 is designed to mount on the Quad II jettison rail at approximately station 1200 with camera lens facing aft. Position 3 is planned for Quad III approximately 37 degrees off the X-axis with the aft end of the ejection tube at station 1133. This camera will be looking at the booster thrust section to visually record booster jettison events.

RCP position 1 will be employed on Missile 57F. Other missiles in this series are presently planned to use position 3 only.

THIS MATERIAL CONTAINS INFORMATION AFFECTING THE NATIONAL DEFENSE OF THE UNITED STATES WITHIN THE MEANING OF THE ESPIONAGE LAWS, TITLE 18, U.S.C., SECTIONS 793 AND 794, THE TRANSMISSION OR REVELATION OF WHICH IN ANY MANNER TO AN UNAUTHORIZED PERSON IS PROHIBITED BY LAW

CONFIDENTIAL

LIFTOFF CAMERAS

Optical coverage of the engine compartment on flights after 67E will be accomplished through the use of two ejectable liftoff cameras (LOC). The purpose of these cameras is to visually detect and record any fires or live ruptures that occur during engine start and missile liftoff. The forward camera (measurement M7604N) whose location is indicated as position 5 will be installed at station 1191 in Quad III approximately 15 degrees off the X-axis. The prime components in this camera's field of view are the Sustainer Lox Pump and Lox Y Ducting. The camera will be ejected at an angle of 90 degrees from the missile Z-axis.

The aft camera (measurement M7605N) will be located in Quad III approximately 40 degrees off the X-axis. Its location is known as position 4. Included within this camera's field of view are part of the tank apex, the low pressure fuel line from the tank and various components within this area. This camera will be ejected at an angle of 60 degrees from the missile Z-axis. For recovery, both cameras will be ejected at approximately five (5) seconds after missile liftoff.

THIS MATERIAL CONTAINS INFORMATION AFFECTING THE NATIONAL DEFENSE OF THE UNITED STATES WITHIN THE MEANING OF THE ESPIONAGE LAWS, TITLE 18, U.S.C., SECTIONS 793 AND 794, THE TRANSMISSION OR REVELATION OF WHICH IN ANY MANNER TO AN UNAUTHORIZED PERSON IS PROHIBITED BY LAW

~~CONFIDENTIAL~~

PRESSURE PULSE INSTRUMENTATION

Several measurements will be added to the OSTF-2 facility and missiles in order to determine the effects of a pressure pulse such as occurred on the launches of Missiles 67E and 57F. Two of these measurements (A1585P and A1586P) will be located inside the missile in Quads I and III adjacent to the heat shield. The remaining six measurements (L7017P through L7016P, L7601P, and L7602P) will be located external to the missile. Measurements L7601P and L7602P will be mounted on the launcher and located adjacent to the heat shield in Quads I and III. Measurements L7013P through L7016P will be located on the flame bucket with their sensing elements facing into the bucket.

The data from the above measurements should reveal the severity of the pressure pulse for the silo configuration and should also provide a correlation between OSTF-1 and OSTF-2.

THIS MATERIAL CONTAINS INFORMATION AFFECTING THE NATIONAL DEFENSE OF THE UNITED STATES WITHIN THE MEANING OF THE ESPIONAGE LAWS, TITLE 18, U.S.C., SECTIONS 793 AND 794, THE TRANSMISSION OR REVELATION OF WHICH IN ANY MANNER TO AN UNAUTHORIZED PERSON IS PROHIBITED BY LAW

~~CONFIDENTIAL~~

This page intentionally left blank.

THIS MATERIAL CONTAINS INFORMATION AFFECTING THE NATIONAL DEFENSE OF THE UNITED STATES WITHIN THE MEANING OF THE ESPIONAGE LAWS, TITLE 18, U.S.C., SECTIONS 793 AND 794, THE TRANSMISSION OR REVELATION OF WHICH IN ANY MANNER TO AN UNAUTHORIZED PERSON IS PROHIBITED BY LAW

~~CONFIDENTIAL~~

DISCUSSION OF FACILITY INSTRUMENTATION

COMMUNICATION SYSTEM

The design of the operational weapon system communications equipment will be verified at OSTF #2. The configuration will be identical to Operational Bases.

It will be necessary to establish that the sufficient communications channels have been provided and that the transmission characteristics are adequate. The system consists of 41 telephones and 38 loudspeakers. Refer to functional schematic 7-6.

The above will be determined by a study of:

1. The amount of traffic per station.
2. Delays per station due to simultaneous calls.
3. Traffic distribution.
4. Frequency of usage of various systems, e.g., public address, dial.
5. Holding times.
6. Post operation check-lists/questionnaires.
7. Time intervals in relation to particular activities.

The above data requirements will be ascertained from:

Twenty event measurements (N7051X - N7070X, COM STA ON-OFF) which will be connected to the stations whose usage is greatest. Astronautics will supply wiring to the communications room and Kellogg will condition and connect the wiring to the stations.

Ten channels of voice recording (N7072Y - N7081Y) supplied by Kellogg for traffic analysis.

THIS MATERIAL CONTAINS INFORMATION AFFECTING THE NATIONAL DEFENSE OF THE UNITED STATES WITHIN THE MEANING OF THE ESPIONAGE LAWS, TITLE 18, U.S.C., SECTIONS 793 AND 794. THE TRANSMISSION OR REVELATION OF WHICH IN ANY MANNER TO AN UNAUTHORIZED PERSON IS PROHIBITED BY LAW

CONFIDENTIAL

LAUNCH CONTROL

The equipment and procedures by which automatic and remote operation of a missile launch is effected is called Launch Control. The launch control operation is capable of being performed by one person, the Launch Control Officer. The system is primarily a relay logic system, time sequenced to accomplish the launching countdown within the prescribed time. A minimum of fault indications will be provided as necessary to isolate faults on a subsystem basis. The Launch Control Equipment consists of one Launch Console, two relay logic units, and two signal responder units. The launch control system is capable of maintaining a readiness state for an extended period of time. Launch Control will perform static monitoring of the missile and AGE subsystem, and by comparison to the responder unit, which consists of equipment arranged to simulate functional circuitry of the missile and AGE, will be self-monitoring. The signal responders will have the capability through switching connections to respond to all control signals originating at the Launch Console or at the Relay and Logic Units. For a given input signal the responders will provide the suitable replies to permit the full operation of the Launch Control system. This will permit determination that the relay logic circuits are functioning correctly. The responder will include fault insertion to test the ability of the system to detect faults and to provide the unit proficiency system capabilities checks.

MOBILE APCHE (Automatic Programed Checkout Equipment) is used for missile system analysis only. MAPCHE is in essence a sophisticated voltmeter and accomplishes its check-out of systems by reducing all measurements such as pressures and temperatures to voltages which it compares to internal standards. Voltage ranges for each test are contained on punched cards and a go- or no-go comparison is made. The value of MAPCHE lies in the high speed with which a large number of tests can be accomplished with a great degree of reliability. MAPCHE, like Launch Control is self-checking, therefore no instrumentation is planned to evaluate or analyze it.

The logical place to gain easy access for AGE instrumentation pickup points is through Launch Control, since nearly all signals and measurements either terminate there or pass through before activating other sequences. The cables to the Launch Control Console are provided with breakouts in the form of cable splices to allow instrumentation connections to any of the

THIS MATERIAL CONTAINS INFORMATION AFFECTING THE NATIONAL DEFENSE OF THE UNITED STATES WITHIN THE MEANING OF THE ESPIONAGE LAWS, TITLE 18, U.S.C., SECTIONS 793 AND 794, THE TRANSMISSION OR REVELATION OF WHICH IN ANY MANNER TO AN UNAUTHORIZED PERSON IS PROHIBITED BY LAW

CONFIDENTIAL

wires in the cables. The following breakout cables are provided to allow rapid connection of contained wires to the recording facility via a patch panel and appropriate landlines cables.

107P111	107P149
107P120	107P150
107P143	107P151
107P145	

If necessary other breakout cables can be routed and connected to the patch panel, but at present these cables contain all needed pickup points. The other cable breakouts will be ready for use any time additional instrumentation is needed, but will remain unconnected until required.

At this time, the following instrumentation will be used to monitor the launch control operation.

N7002X SELECT A BUTTON, and N7003X SELECT B BUTTON, are event recordings of the application of electrical power from the STANDBY BUS to Target and Roll Voltage set circuitry when these buttons are pressed, thus partially interlocking the light indication circuitry for the TARGET A SELECTED or TARGET B SELECTED indicator lights. These indicator lights are directly above the select buttons on the Launch Officer's Control Panel.

N7024X START BUTTON, N7028X COMMIT START BUTTON, and N7042X START ABORT SWITCH, are event recordings of application of electrical power to the COMMIT START BUS, (N7024X monitoring initiating of the countdown) and the START ABORT BUS. The power is applied by pressing these buttons. Activation of the ALARM RESET SWITCH (N7030X) shuts off the launch control console alarm buzzer, permitting the alarm to be available for further warning. In addition to the above, two color 16mm motion picture cameras (N7754N, N7755N) will be utilized to obtain data on Launch Console displays and operator action during a countdown.

In order to show that all Launch Control and missile systems receive adequate activation voltage, and that all power supplies provide the specified power required, the following measurements have been added:

THIS MATERIAL CONTAINS INFORMATION AFFECTING THE NATIONAL DEFENSE OF THE UNITED STATES WITHIN THE MEANING OF THE ESPIONAGE LAWS, TITLE 18, U.S.C., SECTIONS 793 AND 794, THE TRANSMISSION OR REVELATION OF WHICH IN ANY MANNER TO AN UNAUTHORIZED PERSON IS PROHIBITED BY LAW

CONFIDENTIAL

E7003V	28 VDC GND VOLTAGE
E7004V	400 CPS GND VOLTAGE
E7005V	28 VDC A/B VOLTAGE
E7006V	400 CPS INVERTER OUT
E7007V	440 V IN TO DC SUP

PROPELLANT LOADING

A. FUEL LOADING

The fuel loading system is unique in that fuel is stored in the missile in lieu of separate tank storage. Fuel is initially transferred from a fuel tank truck at grade level through silo plumbing and fuel loading prefab at a flow rate of approximately 250 gallons-per-minute. This flow (P7569R) is monitored by a turbine type flow meter installed in the 4 inch fill line. Pressure instrumentation (P7691P, P7909P) will be used to determine if excessive pressure surges exist in the fuel loading prefab plumbing which could be detrimental to the hardware. Fuel flow into the missile requires that valve F-1 and the airborne fill-and-drain valve be open. Valve positions for F-1 (P7922X, P7923X) and the airborne valve (P7934X, P7935X) will be monitored by these discrete measurements.

Two dual element sensors installed in the missile give discrete level indications as fuel covers the sensors. The lower sensor A and B elements (U7021X, U7022X) must be wet and the upper sensor A and B elements, (U7023X, U7024X) must be dry to indicate correct fuel level. These level measurements will also verify operation of the fuel portion of the PLCU. A delta-pressure measurement (U7081P), will be used to verify fuel level with respect to sensor activation.

As fuel is transferred to the missile, its temperature is monitored at the fuel loading prefab. This temperature is used to determine the level to which the fuel leveling tank is filled. Two temperatures (P7572T, P7566T) in the missile fuel tank and at the launch platform rise-off disconnect will verify operation of the fuel leveling subsystem. The fuel leveling tank is sized to a volume commensurate with maximum fuel temperature variations. Heat transfer to or from the loaded fuel in the missile

THIS MATERIAL CONTAINS INFORMATION AFFECTING THE NATIONAL DEFENSE OF THE UNITED STATES WITHIN THE MEANING OF THE ESPIONAGE LAWS, TITLE 18, U.S.C., SECTIONS 793 AND 794, THE TRANSMISSION OR REVELATION OF WHICH IN ANY MANNER TO AN UNAUTHORIZED PERSON IS PROHIBITED BY LAW

~~CONFIDENTIAL~~

during long periods will cause the fuel to either increase or decrease in volume and thus require corrective action to restore the desired volume. The fuel leveling tank receives or transfers fuel in response to the corrective action required. Depending on inlet fuel temperature during initial loading, the fuel leveling tank is filled to one of two levels. For fuel temperatures above 85°F, the tank is filled completely (monitored by P7938X). For fuel temperature between 55°F and 85°F the tank is filled to the 50% level (P7939X). For fuel temperatures below 55°F, the tank is left empty.

Pressurization for the fuel leveling tank, associated plumbing and pneumatic control pressure for automatic valves F-1, F-2, F-3, and F-4 is supplied from a GN_2 cylinder mounted on the fuel loading prefab. Instrumentation installed to monitor the GN_2 pressure (P7911P) and temperature (P7908T) will be used to determine gas usage and supply adequacy during a countdown. The leveling tank ullage pressure (P7567P) and vent valve positions (P7195X, P7196X), will furnish data on GN_2 valve and regulator action. Sequence measurements (P7930X, P7931X) will monitor position of the fuel leveling tank pressurization valve NF-1, while the pressure equalizing valve NF-2 position will be monitored by P7932X and P7933X. Automatic fuel valves F-1, F-2 and F-3 will be monitored for the closed position (P7923X, P7925X, P7927X) as well as the open position (P7922X, P7924X, P7926X). Positions (P7928X, P7929X) of the fuel drainback valve NF-4 (drainback from the fuel fill line to the leveling tank) will also be monitored. All valve position indications (as listed above) will be used for analysis of valve sequencing, valve operation and system routines required by an operational site.

Draining the fuel from the missile tank to grade level requires operation (P7936X) of the centrifugal fuel pump F-11. Pressure instrumentation at the pump inlet (P7689P) and discharge (P7688P) will determine the pressure differential through the pump and that pump output satisfies operational requirements. Pressure drop (P7690P) across the fuel filter F-10 will determine fuel cleanness and that the filtering unit meets operational requirements. Two pressures (P7692P, P7693P) at the elevator disconnect and at the rise-off disconnect will be monitored to detect excessive pressure drops during line drain which could cause fill line collapse. The fuel liquid sensor at the stub-up (oscillating crystal type) will be monitored (P7937X) to verify proper operation within the operational requirements.

THIS MATERIAL CONTAINS INFORMATION AFFECTING THE NATIONAL DEFENSE OF THE UNITED STATES WITHIN THE MEANING OF THE ESPIONAGE LAWS, TITLE 18, U.S.C., SECTIONS 793 AND 794, THE TRANSMISSION OR REVELATION OF WHICH IN ANY MANNER TO AN UNAUTHORIZED PERSON IS PROHIBITED BY LAW

CONFIDENTIAL

Prevalves will be incorporated into the missile low pressure fuel ducting to contain the fuel continuously stored in the missile tank. Pressure instrumentation installed at the fuel turbopump inlets (P7002P, P7004P, P7055P) will reveal if the prevalves have opened or closed on command and thus verify the operational requirements.

B. LIQUID OXYGEN LOADING

The operational liquid oxygen loading system has been revised to include a rapid topping system which replaces the slug unit used for final LO_2 loading against sequence III (flight) pressurization.

The main LO_2 storage tank and the LO_2 topping tank are initially filled from resupply trailers located at grade level. The operation of the fill system will be established by monitoring the pressure drop (P7707P) through the resupply filter L-12 and the pressure (P7917P) at the inlet of valve L-7 which is opened to fill the main LO_2 storage tank. Since there is only one supply line for the separate storage tanks, fill valve sequencing is necessary to assure control over LO_2 flow during filling operations from the resupply trailers. Sequence measurements of the main storage tank fill valve L-7 (P7957X, P7958X) and the topping storage tank fill valve L-6 (P7959X, P7960X) will be taken to ascertain proper valve operation. Initial filling of the LO_2 main storage tank will be verified by a sequence measurement (P7947X) monitoring the full level indication.

Missile liquid oxygen loading is controlled by a propellant loading control unit in conjunction with four dual element liquid level sensors mounted in the missile liquid oxygen tank. Dual element sensors forestall the possibility of losing a signal and thus preventing tanking to the 100% full level. LO_2 rapid load is terminated by the 95 percent sensors (U7011X, U7015X) while fine load is terminated by the topping low sensors (U7012X, U7016X). Topping action [illegible] ues until the level reaches the topping high sensors (U7013X, U7017X). Durin[illegible] nmit sequence the rapid topping system fills the missile to the 100 percent level ([illegible]4X, U7018X) to complete LO_2 loading prior to raising the launch platform. An independent delta pressure measurement (U7682P) across the top one-third of the LO_2 tank is used as a check on sensor level indications, while another delta pressure measurement (U7080P) across the entire tank is used as an over-all check on the loading operation with respect to level indications.

THIS MATERIAL CONTAINS INFORMATION AFFECTING THE NATIONAL DEFENSE OF THE UNITED STATES WITHIN THE MEANING OF THE ESPIONAGE LAWS, TITLE 18, U.S.C., SECTIONS 793 AND 794. THE TRANSMISSION OR REVELATION OF WHICH IN ANY MANNER TO AN UNAUTHORIZED PERSON IS PROHIBITED BY LAW

CONFIDENTIAL

Transfer of LO_2 from the storage tanks to the missile is accomplished by pressurizing the storage tanks with GN_2 and actuating automatic valves in the proper sequence. The inlet (F7057P) and outlet (F7058P) pressures of pressurizing valve N-2 with two strain measurements (P7183S, P7184S) will verify valve operation and line integrity. The ullage pressures in the main storage (P7549P) and topping (P7709P) tanks will be measured to obtain valve sequencing and gas supply regulation information. Flow rate (P7564P, P7914P) during LO_2 rapid loading will be in the order of 5500 GPM and will be monitored by use of a venturi flowmeter. Since high flow rate capability is coupled to system pressure differences, the inlet pressures to rapid load valve L-2 (P7914P), fine load valve L-1 (P7913P) and pressure (P7565P) in the main LO_2 line will be monitored. This pressure instrumentation will also determine if the hydraulic snubbers on valves L-1 and L-2 perform properly to prevent the valves from slamming shut with a resultant damaging pressure surge upstream of the valves. Pressure drop (P7699P) across the main LO_2 filter L-15 will determine LO_2 cleanness and that the filtering unit meets operational requirements. The position of the rapid load valve L-2 (P7225X, P7227X), fine load valve L-1 (P7226X, P7228X), and airborne fill and drain valve (P7963X, P7964X) will be recorded to provide valve timing data for verification of operational performance. A pressure survey covering the rapid load valve (P7700P) the fine load valve (P7701P) and the drain valve (P7706P) will determine if the pressure drop across these valves are compatible with the necessary operational flow rate. Data to determine operational chilldown requirements will be provided by monitoring the temperature and pressure of the main LO_2 line at the elevator disconnect (P7571T, P7578P) at the rise-off disconnect (P7698T, P7697P); and the topping line at the elevator disconnect (P7114T, P7100P) and at its rise-off disconnect (P7702T, P7696P).

The topping control unit (TCU) is designed to provide three different LO_2 flow rates with a constant ullage pressure (approximately 160 PSIG) in the topping tank. Three automatic valves control these flow rates in relation to countdown progression. Control pressure (P7105P) for these valves will be monitored at the TCU manifold. Bleed LO_2 flow rate (P7109P) will monitor the operation required to maintain the ground transfer line temperature (P7114T) below -290°F during a hold period. Topping valve L-60 position (P7117X, P7118X) rapid topping valve L-50 position (P7115X, P7116X) and topping tank vent valve positions (P7193X, P7194X) in conjunction with topping flow rate (P7104P) will determine operational capability with respect to LO_2 flow rate and valve sequencing. LO_2 topping tank level (P7530P) will verify adequate

THIS MATERIAL CONTAINS INFORMATION AFFECTING THE NATIONAL DEFENSE OF THE UNITED STATES WITHIN THE MEANING OF THE ESPIONAGE LAWS, TITLE 18, U.S.C., SECTIONS 793 AND 794, THE TRANSMISSION OR REVELATION OF WHICH IN ANY MANNER TO AN UNAUTHORIZED PERSON IS PROHIBITED BY LAW

~~CONFIDENTIAL~~

LO_2 supply to prevent the transfer of gas instead of LO_2 to the missile. Topping valve L-60 is opened at the start of the commit sequence and is used to fill the missile from the 99.25 percent level to the 100 percent level against sequence III (flight) pressure. Thus, the missile liquid oxygen tank is at the 100 percent full level prior to raising the launch platform. A pressure survey (P7106P, P7107P, P7108P), will determine the pressure drop across the TCU while two temperatures (P7113T, P7114T) will determine heat input to the TCU.

The TCU is also used to drain and vent the main LO_2 transfer line prior to raising the launch platform. Valve position of N-80 (P7129X, P7130X) and N-60 (P7131X, P7132X) along with the main LO_2 line drain pressure (P7135P) will determine operational adequacy of the system.

The inlet pressure (P7915P) to the missile drain valve L-16, the pressure drop (P7706P) across this valve and position (P7238X, P7240X) of the valve will provide data to determine valve action and whether or not excessive pressure drops occur during drain.

Sequence measurements (P7223X, P7236X) of the LO_2 storage tank vent valve will provide valve timing data with relation to the fill and drain procedures. The over-all engine compartment environment and temperature gradient and distribution will be established by an extensive array of ambient temperature measurements (P7812T through P7827T).

C. LN_2-HELIUM TRANSFER

Gas from the two helium storage bottles and the GN_2 supply goes directly into the Pneumatic Distribution Unit (PDU). From there it is routed to the LN_2 Helium heat exchanger, the Helium Charge Unit (HCU), the missileborne controls bottle, and the Pressure Control Unit (PCU). The adequacy of the helium and GN_2 supply to the PDU will be determined by pressure measurements at the PDU inlets (F7723P, P7724P, F7725P). The quantity of helium used during test operations will be calculated from temperature (F7836T, F7837T) and pressure (F7723P, F7724P) information. LN_2 Helium heat exchanger efficiency and pressure drop will be exhibited by temperature and pressure instrumentation in the heat exchanger helium inlet (F7714T, F7716P)

THIS MATERIAL CONTAINS INFORMATION AFFECTING THE NATIONAL DEFENSE OF THE UNITED STATES WITHIN THE MEANING OF THE ESPIONAGE LAWS, TITLE 18, U.S.C., SECTIONS 793 AND 794, THE TRANSMISSION OR REVELATION OF WHICH IN ANY MANNER TO AN UNAUTHORIZED PERSON IS PROHIBITED BY LAW

CONFIDENTIAL

and outlet (F7715T, F7717P) ducts. The effectiveness of the LN_2 coaxial shroud around the helium charge line to the missile will be obtained by a temperature instrument at the missile riseoff disconnect (F7745T). Instrument air regulation will be exhibited by a pressure measurement (F7727P).

Liquid nitrogen is loaded into the shrouds surrounding each missileborne tank pressurization sphere. As liquid nitrogen is a critical commodity in the silo, the amount of liquid nitrogen flowing from the storage tank (F7719R) will be measured. Since liquid flow rate is sensitive to pressure drops in the system, pressure instrumentation in the missile LN_2 riseoff disconnect (F7020P) and missile LN_2 shroud (F7713P) will verify system design criteria.

The Helium Charge Unit (HCU) keeps the missileborne tank pressurization bottles fully charged during missile elevation and countdown. The ability of the HCU to maintain pressure in the missileborne spheres and the amount of helium utilized will be monitored by pressure (F7735P) and temperature (F7736T) instrumentation in the HCU discharge line. HCU response and deadband will be exhibited by pressure and temperature measurements in the missile fuel tank ullage pressure sensing line (F7737P, F7738T).

The Pressure Control Unit (PCU) maintains missile tank pressures at all times except during missile elevation and flight. The pressure at which helium is supplied to the missile by the PCU will be determined by pressure measurements in each pressurization line (F7729P, F7730P). Temperature instrumentation in the PCU pressurization ducts (F7017T, F7018T) will exhibit the condition of the gas. Pressure measurements in the LOX and Fuel tank pressurization ducts at the riseoff disconnects (F7013P, F7006P) will indicate the magnitude of pressure losses to be expected in the pressurization lines.

D. GASEOUS NITROGEN PRESSURIZATION

Gaseous nitrogen pressurizes the fuel, liquid oxygen, and liquid nitrogen storage tanks, and the liquid oxygen topping tank to enable propellant transfer. Gaseous nitrogen is also supplied to the nitrogen control unit (NCU) and the pneumatic distribution unit (PDU) to perform various service functions.

THIS MATERIAL CONTAINS INFORMATION AFFECTING THE NATIONAL DEFENSE OF THE UNITED STATES WITHIN THE MEANING OF THE ESPIONAGE LAWS, TITLE 18, U.S.C., SECTIONS 793 AND 794, THE TRANSMISSION OR REVELATION OF WHICH IN ANY MANNER TO AN UNAUTHORIZED PERSON IS PROHIBITED BY LAW

CONFIDENTIAL

As gas supplies are a critical item in the silo concept, the pressure (P7546P) and temperature (P7547T) of the gas from the nitrogen bank supplying the NCU, PDU, and fuel prefab will be monitored to provide gas usage and system adequacy information. The LOX storage tanks GN_2 supply pressure will be measured at the bottle manifold (P7056P). Ullage and pressurization line pressure measurements for the main LOX (P7549P, P7710P) and topping (P7709P, P7711P) storage tanks, in conjunction with LOX storage tank vent valve position (P7223X, P7236X) and pressurization valve inlet pressure (P7972P) information will determine over-all system performance.

AIR CONDITIONING

A. FACILITY HEATING, VENTILATING AND AIR CONDITIONING

Proper functioning of the launch site depends on the ability of the air conditioning system to maintain a proper environment for all equipment. An extensive temperature, humidity and air velocity survey will be made at OSTF-2. This will involve 40 total measurements distributed throughout the silo and launch control center. See Figures 13 and 14.

Some of the steady state parameters will be manually recorded using portable instruments. These are the air intake and exhaust temperatures of the electrical equipment cabinets located on level 3 of the silo, (N7621T through N7630T) and relative humidities in the silo and launch control building, (N7685J, N7800J, N7687J, N7801J and N7802J).

During various phases of testing, it may be desirable to measure temperatures and relative humidities at locations not specifically defined in this report. These portable instruments would also be available for this purpose.

Temperatures within ducts and other high air flow areas may change rapidly over a short period of time. In this case it would be desirable to record these on remote instruments. Measurements planned for remote recording are: N7579T through N7588T, N7597T through N7620T, N7646T and N7807T.

THIS MATERIAL CONTAINS INFORMATION AFFECTING THE NATIONAL DEFENSE OF THE UNITED STATES WITHIN THE MEANING OF THE ESPIONAGE LAWS, TITLE 18, U.S.C., SECTIONS 793 AND 794, THE TRANSMISSION OR REVELATION OF WHICH IN ANY MANNER TO AN UNAUTHORIZED PERSON IS PROHIBITED BY LAW

~~CONFIDENTIAL~~

investigated. The engine compartment is supplied with air from a forced air heater located below the 8th level of the silo. To ensure that the missile engine compartment is receiving enough air at the proper temperature, the pressure and the temperature of the air will be measured. F7722P will determine the pressure and F7721T, the temperature.

Certain fluids and materials present in the engine compartment must be within a specified temperature range in order to have a satisfactory engine start. Among these items, the main engine hypergolic fluid (P7802T, P7803T, P7806T) and the hydraulic fluid to the sustainer engine actuators (P7181T, P7182T) will be instrumented.

LAUNCH PLATFORM INSTRUMENTATION

During the raising and lowering tests of the launch platform, it will encounter both sustained and transient accelerations. The magnitudes and directions will be determined by N7842A through N7849A. See figure 18. During an actual launch, vibration data will be obtained with six ± 50G accelerometers in the following locations.

1. Flame deflector area (N7829A and N7830A)

2. Directly below the missile (N7831A, N7832A)

3. Fourth level of the launch platform (N7833A, N7834A)

MISSILE LIFTING SYSTEM

A. GENERAL

The missile lifting system consists of AGE and facility equipment which support the missile in the Silo during standby and delivers it to the ready position for launching. It contains the following major subsystems used during countdown and launch.

1. Launch Platform Drive Mechanism

2. Launch Platform Lock System

THIS MATERIAL CONTAINS INFORMATION AFFECTING THE NATIONAL DEFENSE OF THE UNITED STATES WITHIN THE MEANING OF THE ESPIONAGE LAWS, TITLE 18, U.S.C., SECTIONS 793 AND 794. THE TRANSMISSION OR REVELATION OF WHICH IN ANY MANNER TO AN UNAUTHORIZED PERSON IS PROHIBITED BY LAW

CONFIDENTIAL

3. Door Closure

4. Crib Lock

B. LAUNCH PLATFORM DRIVING MECHANISM

The drive mechanism consists of two 125 HP, 400v 60 cycle 3-phase motors, speed reducer, brake, drive cables, motor control center, and counterweight.

During the countdown cycle the drive mechanism is operated at high speed to get the missile in firing position within countdown time requirements. In order to stay within available power limitations the lowering cycle is accomplished at slow speed. Power limitations also require slow speed operation when hoisting the empty launcher platform.

THIS MATERIAL CONTAINS INFORMATION AFFECTING THE NATIONAL DEFENSE OF THE UNITED STATES WITHIN THE MEANING OF THE ESPIONAGE LAWS, TITLE 18, U.S.C., SECTIONS 793 AND 794, THE TRANSMISSION OR REVELATION OF WHICH IN ANY MANNER TO AN UNAUTHORIZED PERSON IS PROHIBITED BY LAW

CONFIDENTIAL

design indicates use of linear potentiometer transducers. They would be affixed between the wall of the silo and the movable crib.

2. Six ± 4G accelerometers will be positioned as required for each test. These measurements are designated as "movable accelerometers" and are N7542A, N7543A, N7741A, N7742A, N7743A, and N7744A.

3. Four ± 20G accelerometers are also to be monitored: two on the first level of the crib (N7835A, N7836A); and two located between the first and second level of the crib (N7837A, N7838A).

4. One ± 5G accelerometer is to be located on the third level (N7839A); and another ± 5G accelerometer on the fifth level (N7840A).

Twelve alternate locations are planned for these same accelerometers. During the latter part of the drop test they will be moved to the following locations:

N7820A	Hydraulic Manifold	Figure 73218A
N7830A	Pipe out of Hydraulic manifold (L/P 2nd level)	Figure 73218A
N7831A	Umbilical Junction Box (L/P 2nd level)	
N7832A	Low speed motor, coupling actuator (Crib 1st level)	Figure 73214A
N7833A	L/P Lock Actuator (L/P 2nd level)	Figure 73219A
N7834A	Horizontal crib lock (crib, 1st level)	Figure 73213A
N7835A	Hydraulic Power Pack (Crib 2nd level)	Figure 73215A
N7836A	Hydraulic Pump motor mount (crib, 2nd level)	
N7837A	Optimum location to be selected	

THIS MATERIAL CONTAINS INFORMATION AFFECTING THE NATIONAL DEFENSE OF THE UNITED STATES WITHIN THE MEANING OF THE ESPIONAGE LAWS TITLE 18, U.S.C., SECTIONS 793 AND 794. THE TRANSMISSION OR REVELATION OF WHICH IN ANY MANNER TO AN UNAUTHORIZED PERSON IS PROHIBITED BY LAW

CONFIDENTIAL

N7838A	AMF Logic Rack (small component X axis) optimum location to be selected.	
N7839A	Personnel Elevator, Drive motor mount	
N7840A	Chilled water pump (crib, 4th level)	Figure 73217A

LOAD CELLS & FACILITY MISSILE

The facility missile will rest upon four load cells (N7962S through N7965S) which will record both positive and negative forces to be imposed upon the main support longerons of the actual missile during raising and lowering operations.

The facility missile has springs around its thrust barrel section in order to more closely simulate the stiffness of an actual missile so that the same dynamic response will be obtained from external loads. In addition strain gages on each of the four springs (N7958S through N7961S) will act as backup measurements and also will be useful in determining dynamic loads. (See Illustration, Page 7-4.)

ACCELERATION AND DEFLECTION MEASUREMENTS

Tests will be performed to determine if the missile will be adequately supported and properly stabilized during ascending and descending platform operations. As the launch platform is raised or lowered, two accelerometers on the missile nose (A7541A, A7542A) will sense the rate, direction and amplitude of the horizontal movements.

Two measurements will monitor missile vertical alignment in the X(A7828D) and Y(A7829D) axes. Pendulous type accelerometers will be utilized as these instruments have good sensitivity and accuracy. The accelerometer outputs will be integrated twice to obtain missile displacement information. These measurements will determine how much the missile shifts from the vertical during raising and lowering operations.

THIS MATERIAL CONTAINS INFORMATION AFFECTING THE NATIONAL DEFENSE OF THE UNITED STATES WITHIN THE MEANING OF THE ESPIONAGE LAWS, TITLE 18, U.S.C., SECTIONS 793 AND 794, THE TRANSMISSION OR REVELATION OF WHICH IN ANY MANNER TO AN UNAUTHORIZED PERSON IS PROHIBITED BY LAW

CONFIDENTIAL

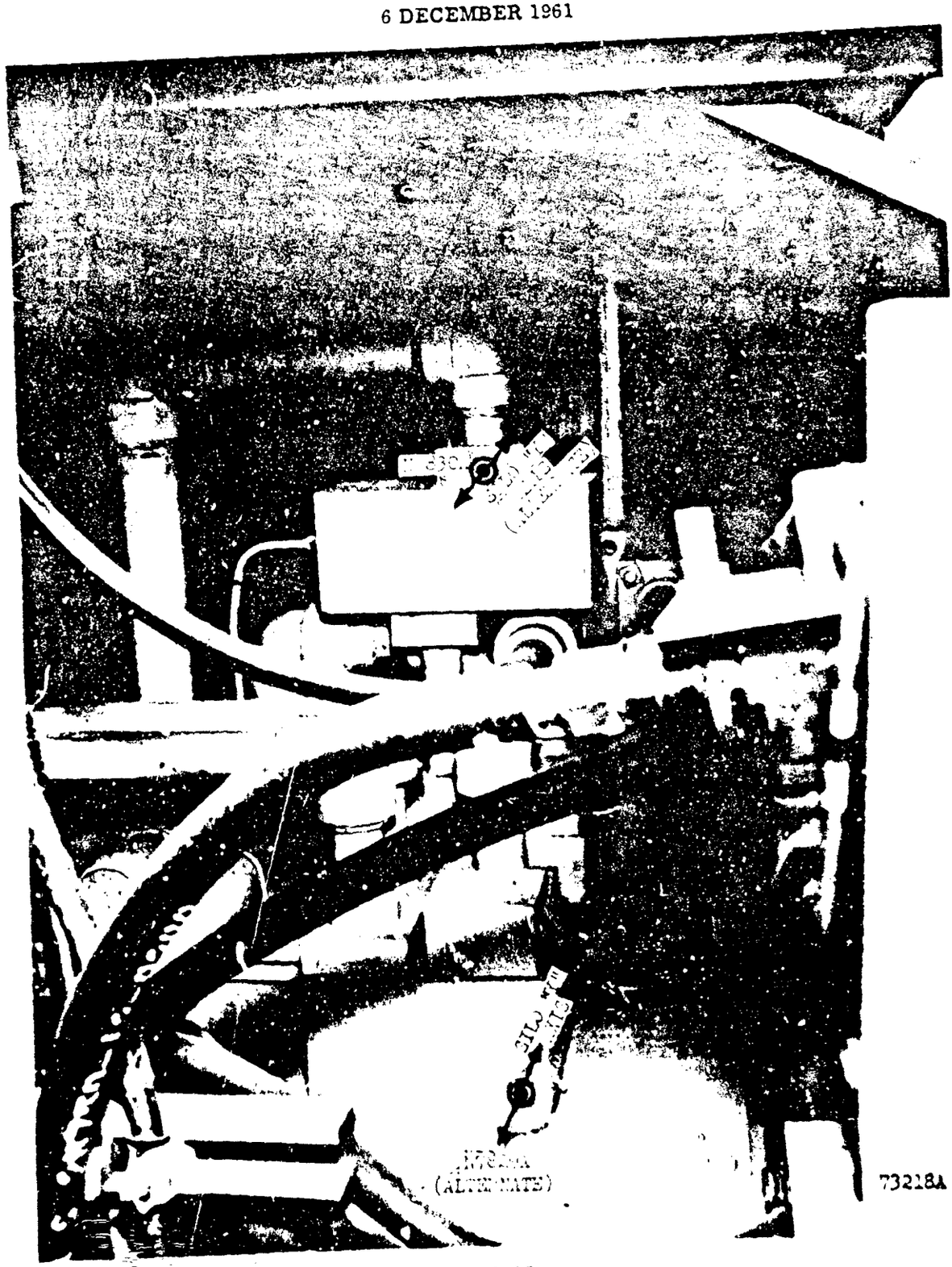

73218A

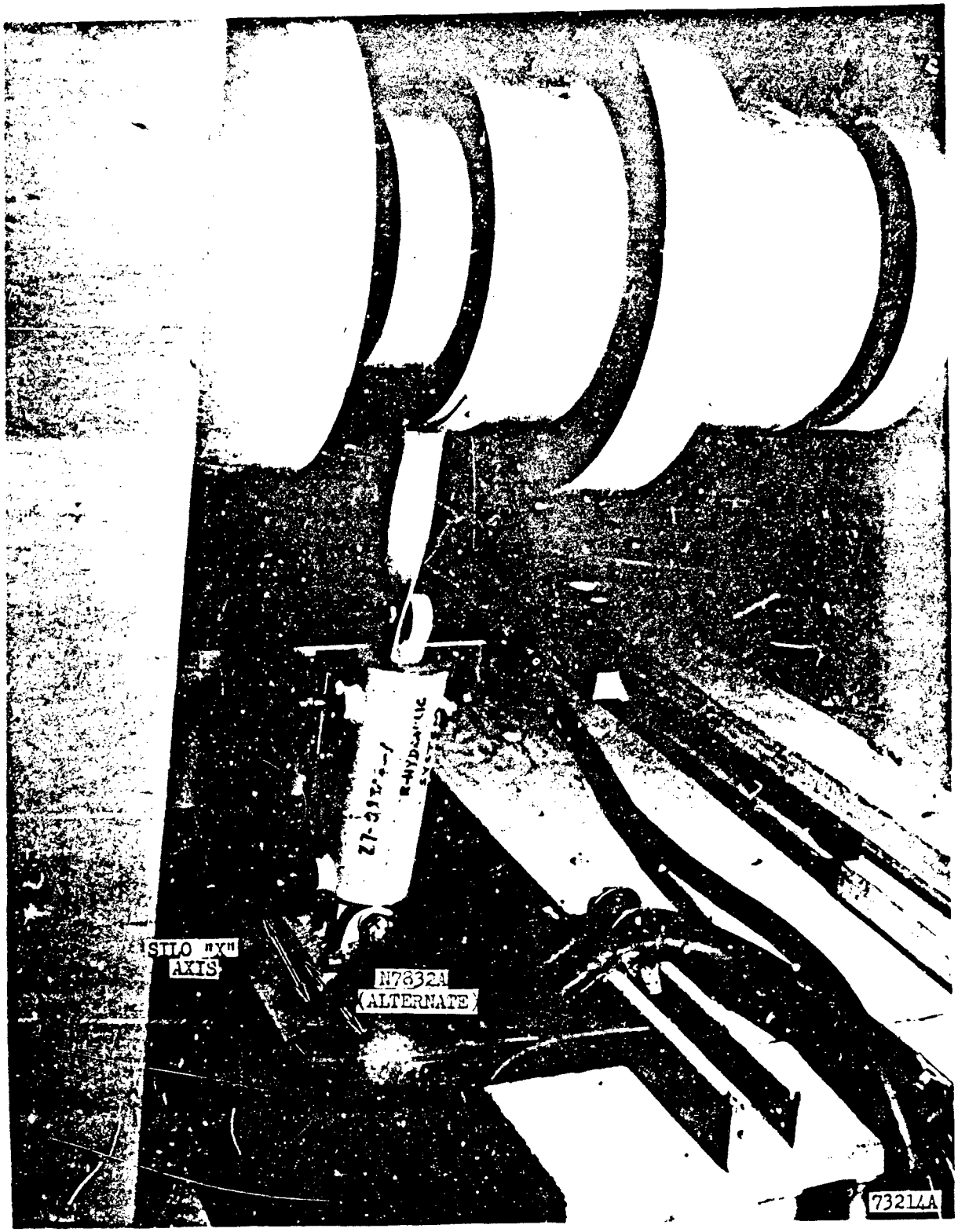
STLO
AXIS
N7832A
(ALTERNATE)
73214A

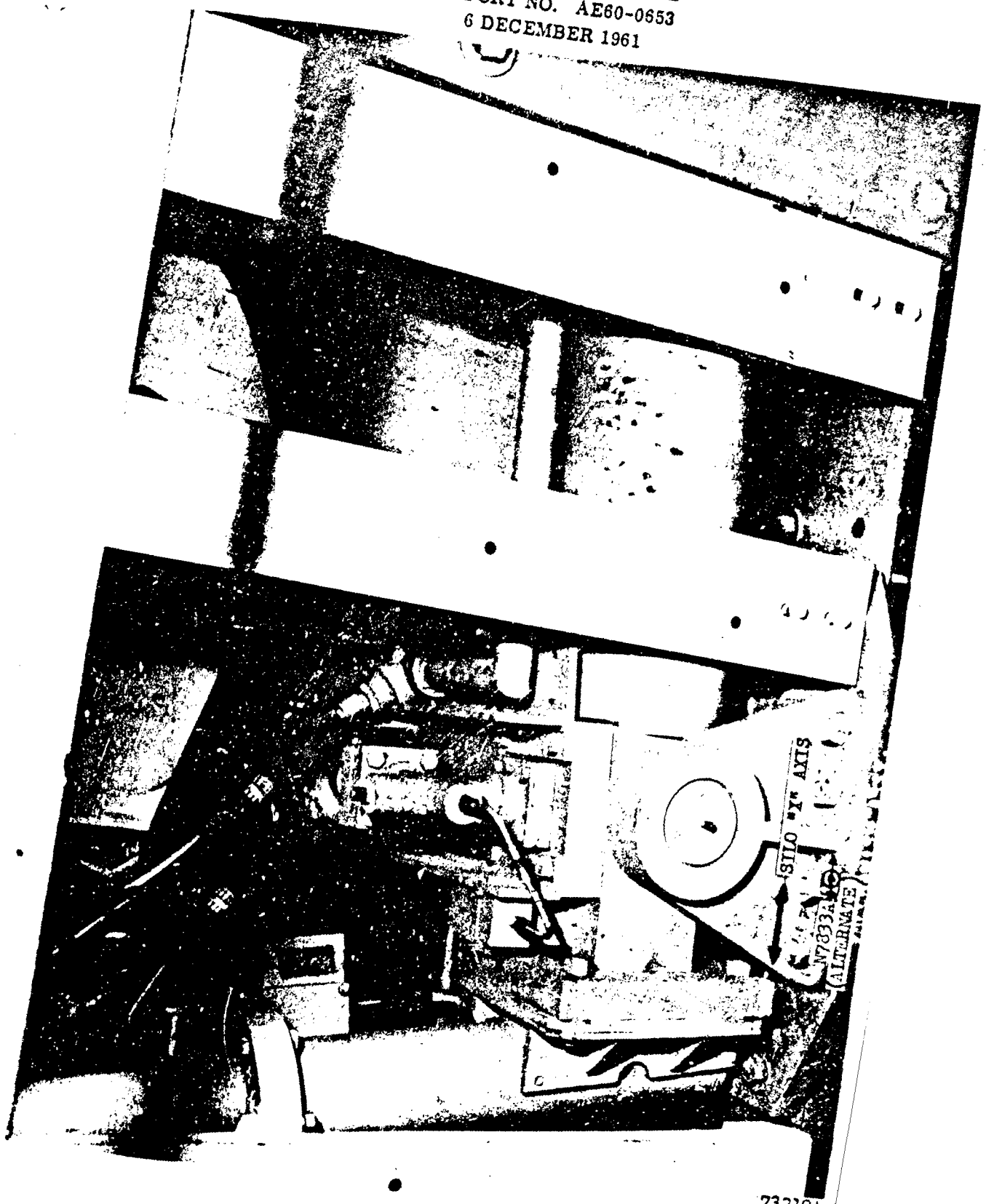

73219A

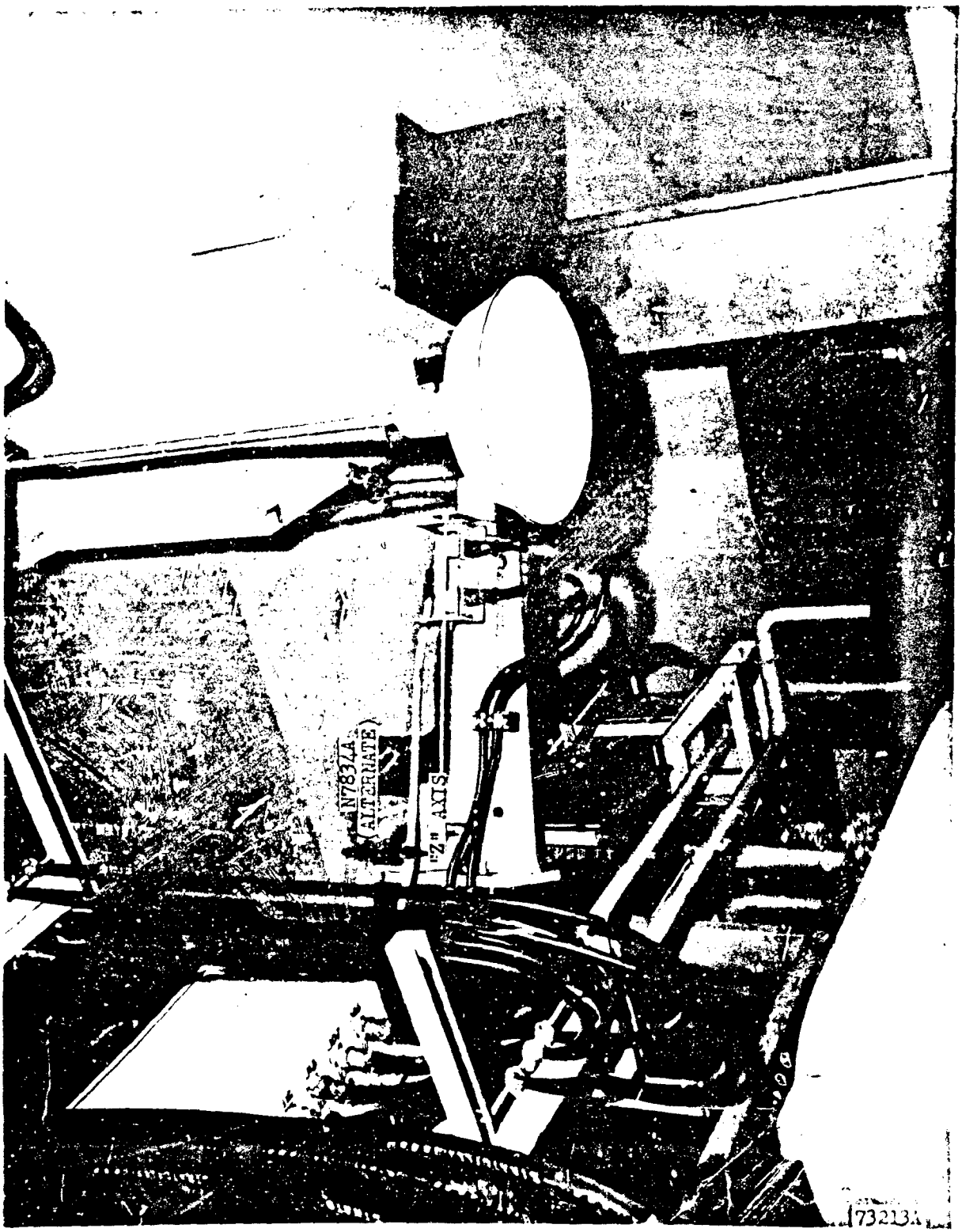
N7837A
(ALTERNATE)
"Z" AXIS
73213A

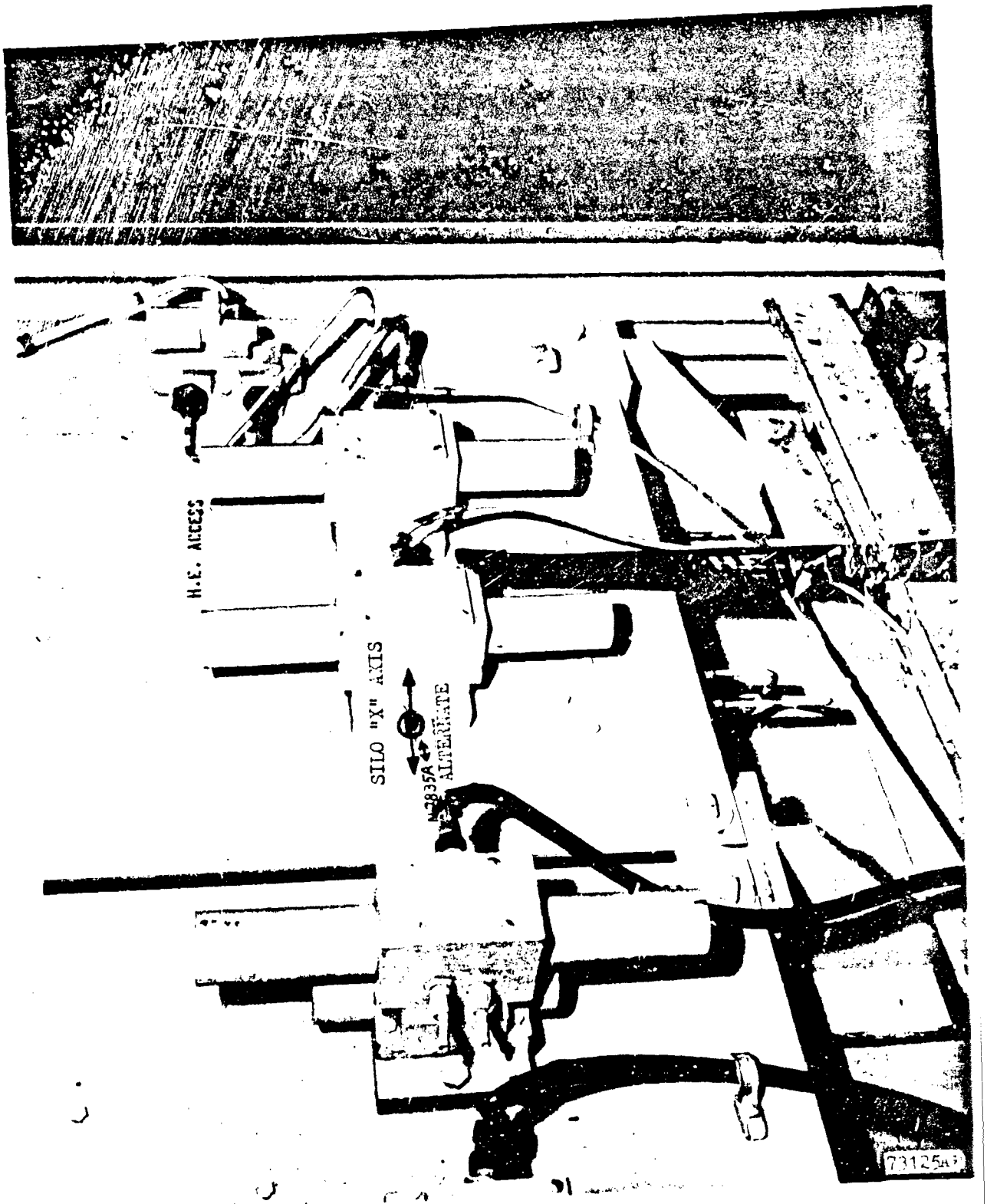
H.E. ACCESS
SILO "X" AXIS
N-835A
ALTERNATE
73125

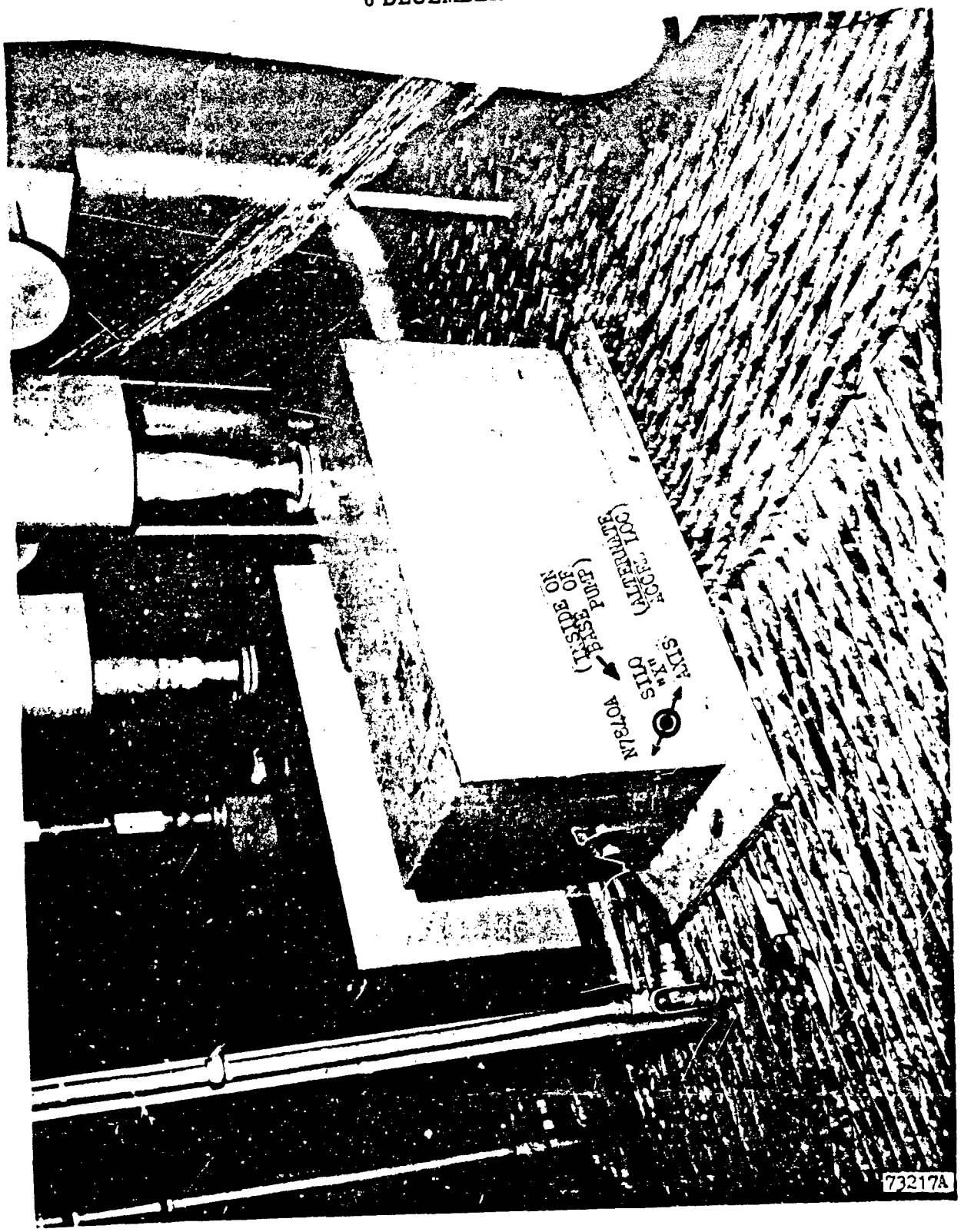
N7840A
(INSIDE ON PASE OF PUMP)
SILO "X" AXIS
(ALTERNATE ACCEL LOC)
73217A

MISSILE LIFTING SYSTEM

A. GENERAL

The missile lifting system consists of AGE and facility equipment which support the missile in the Silo during standby and delivers it to the ready position for launching. It contains the following major subsystems used during countdown and launch.

1. Launch Platform Drive Mechanism
2. Launch Platform Lock System
3. Door Closure
4. Crib Lock

B. LAUNCH PLATFORM DRIVING MECHANISM

The drive mechanism consists of two 125 HP, 400 v 60 cycle 3-phase motors, speed reducer, brake, drive cables, motor control center, and counterweight.

During the countdown cycle the drive mechanism is operated at high speed to get the missile in firing position within countdown time requirements. In order to stay within available power limitations the lowering cycle is accomplished at slow speed. Power limitations also require slow speed operation when hoisting the empty launcher platform.

The integrity of the missile and the silo depend upon proper performance of the L/P drive mechanism. The ability of the system to function within the allotted time limit plus the capability of the system to develop the required forward and reverse torque for L/P control during rise will be obtained by monitoring L/P displacement (N7908D), motor torque (N7804F) and motor RPM (N7803B). Performance of the L/P braking system will be obtained by measuring the actuation signal (H7813X) and brake cylinder actuation pressure (H7529P).

THIS MATERIAL CONTAINS INFORMATION AFFECTING THE NATIONAL DEFENSE OF THE UNITED STATES WITHIN THE MEANING OF THE ESPIONAGE LAWS, TITLE 18, U.S.C., SECTIONS 793 AND 794, THE TRANSMISSION OR REVELATION OF WHICH IN ANY MANNER TO AN UNAUTHORIZED PERSON IS PROHIBITED BY LAW.

~~CONFIDENTIAL~~

The drive cables are anchored to the tension equalizer and to the counterweight. A portable strain measuring device (N7923S) will be used to periodically check cable tension. The tension equalizer is a three bar linkage that enables loads to be distributed equally to the lift cables to compensate for varying conditions. Its displacement (N7935D) will be monitored to insure proper performance during L/P raising and lowering operations.

The most critical portion of Launch Platform displacement is prior to reaching the up-lock or down-lock strikers. The Launch Platform is to be stopped in approximately 13 inches of travel at creep (1 inch/sec) speeds. High accuracy measurements of velocity will be monitored during the last 7 inches of up (N7980L, N7981L) or down (N7982L) travel, with observer cut-off capability in the event of a malfunction.

Counterweight vertical (N7912A), lateral (N7913A) and transverse (N7914A) acceleration will be monitored in conjunction with launch platform vertical displacement (N7908D) to establish impact loading, counterweight wobble, and counterweight/launch platform alignment.

LAUNCHER PLATFORM LOCKING SYSTEM

The Launcher Platform Lock System consists of mechanical locks at the third level of the launcher platform which lock against strikers on the crib at both the lower and raised positions of the launcher platform. Each of the locks has two hydraulic cylinders, one of which is the lock actuator, the other drives a wedge to hold the lock actuator in locked position. Hydraulic power is supplied through the umbilical loop by the Missile Lift Hydraulic Power System.

Performance of the launch platform locks and wedge locks, and any resulting peak cylinder pressures will be obtained by monitoring their closing (locking) pressures (H7516P, H7528P) and main lock opening (H7976P) pressure. Solenoid valve actuation (H7807X, H7812X) will provide event start and stop times for pressure versus time data.

THIS MATERIAL CONTAINS INFORMATION AFFECTING THE NATIONAL DEFENSE OF THE UNITED STATES WITHIN THE MEANING OF THE ESPIONAGE LAWS, TITLE 18, U.S.C., SECTIONS 793 AND 794, THE TRANSMISSION OR REVELATION OF WHICH IN ANY MANNER TO AN UNAUTHORIZED PERSON IS PROHIBITED BY LAW.

~~CONFIDENTIAL~~

DOOR CLOSURE SYSTEM

The Door Closure System consists of two breakaway hydraulic cylinders and one door closure hydraulic cylinder for each of the two doors. Each door operates separately from the other door except for control interlocks which insure proper logic sequence. These same interlocks are also tied into the launcher platform drive mechanism logic units.

Solenoid pilot valve activation (H7805X, H7806X, H7810X, H7811X) for each door (open and close) and head end (opening) pressures (H7981P, H7982P) will be monitored to determine pressure vs time data for system performance and sequencing. Cylinder rod end pressures (H7975P, H7986P) will also be measured to determine peak pressures and snubbing action as the doors reach the extremes of travel while opening. Door angular position (H7987D, H7988D) will be taken for tracking studies and correlation with L/P travel for proper sequencing.

CRIB LOCKING SYSTEM

The Crib Lock System consists of three hydraulic actuators for the horizontal crib locks and four hydraulic actuators for the vertical crib locks. The functions of the crib locks are to lock out the crib shock mounts (springs) and align the crib centerline with the silo centerline during the countdown. Actuating pressures for the horizontal (H7515P) and vertical (H7969P) locks will be monitored to determine peak cylinder pressures. In conjunction with this the solenoid pilot valve position for the horizontal (H7202X, H7203X) and vertical (H7809X, H7816X) locks will be monitored to provide base line data for cylinder pressures recorded.

FACILITY HYDRAULIC POWER SYSTEM

The Facility Hydraulic Power System consists of a bank of accumulators, two electric motor-driven hydraulic pumps to resupply the accumulators and hydraulic distribution lines.

The bank includes filled hydraulic accumulators and GN_2 bottles at 4000 psig. At "Start Countdown," the GN_2 bottles are used to pressurize the hydraulic bottles. All hydraulic power for the facility equipment during the countdown is supplied by accumulators. The

THIS MATERIAL CONTAINS INFORMATION AFFECTING THE NATIONAL DEFENSE OF THE UNITED STATES WITHIN THE MEANING OF THE ESPIONAGE LAWS, TITLE 18, U.S.C., SECTIONS 793 AND 794, THE TRANSMISSION OR REVELATION OF WHICH IN ANY MANNER TO AN UNAUTHORIZED PERSON IS PROHIBITED BY LAW.

CONFIDENTIAL

door opening cylinders have their own independent accumulators, the remaining items of the facility being supplied by a main system accumulator. System testing is not practical until installation is completed.

In order to evaluate the adequacy of hydraulic fluid and gas supplies to provide sufficient power during the countdown, pressure measurements in the main system accumulator (H7507P) and door opening accumulators (H7508P, H7509P) will be taken.

HYDRAULIC PUMPING UNIT

The Hydraulic Pumping Unit is installed on the launch platform. It provides fluid pressure to the missile hydraulic system through two independent pumping systems before the missile pumps start. The unit contains a common reservoir, pump-drive motor and controls. Fin-tube and fan type oil coolers are used. Semi-automatic, the unit contains most of the logic needed for its operation, with a minimum of electrical signals interfacing the Launch Control Center.

The first stage pumping system serves the booster engines and the second stage serves the sustainer and vernier engines. Both stages are rated at 8 gpm at 3000 psig. Before engine start the following functions are performed by this unit:

1. Provide pressure and flow to the missile hydraulic systems until engines are started and the missile booster and sustainer hydraulic pumps are working.

2. Fill and bleed the missile hydraulic system.

3. Provide pressure and flow for hydraulic or autopilot system testing.

4. Remove a fixed volume of oil (65 cu in) from each missile system fluid tank prior to engine start.

Temperature measurements of the booster (H7531T) and sustainer (H7532T) return lines will be monitored to insure that hydraulic fluid is maintained at the proper temperature.

THIS MATERIAL CONTAINS INFORMATION AFFECTING THE NATIONAL DEFENSE OF THE UNITED STATES WITHIN THE MEANING OF THE ESPIONAGE LAWS, TITLE 18, U.S.C., SECTIONS 793 AND 794, THE TRANSMISSION OR REVELATION OF WHICH IN ANY MANNER TO AN UNAUTHORIZED PERSON IS PROHIBITED BY LAW.

CONFIDENTIAL

The capability of the HPU to provide and maintain hydraulic pressure to the missile will be obtained by taking pressure measurements in the booster (H7501P, H7502P) and sustainer (H7503P, H7504P) pressure and return lines.

FACILITY POWER

In order to obtain a power profile for operational sites several facility power measurements are being made. At present only estimated requirements are available for planning new sites. Factual information on power demands is needed. To do this HI-LINE POWER (N7952E) is measured for total power consumption, INSTR-BLDG POWER (N7953E) is measured for instrumentation building power consumption, and the UTILITY BLDG POWER (N7954E) for utility building power consumption. The instrumentation building power plus the utility building power subtracted from the total power gives the remaining power consumed by other areas The 400 CYCLE POWER (N7974E) and 28 VDC LOAD CURRENT (N7975C) are taken to indicate the power consumed by these important electric power generating systems.

The power measurements shall be taken according to the following:

N7952E - OSTF 2 Hi-Line Power. The power will be measured on a portable type recording wattmeter. The site subcontractor shall be responsible for obtaining and installing the necessary potential and current transformers in the site substations and connections to the wattmeters. Some means either electrically or physically shall be used to correlate the recording to real time. The chart speed shall be two (2) inches per hour.

N7953E - OSTF 2, Instrumentation Bldg. Power. These measurements shall be taken with portable clamp-on type ammeters and portable voltmeters. They need not be continuously recorded measurements but spot checks will be taken during the normal work day and logged with respect to real time so that an average power consumption may be computed.

N7954E - OSTF 2, Utility Bldg. Power. These measurements shall be taken in accordance with the same procedures as outlined for the Instrumentation Bldg. Power.

N7974E - OSTF 2, 400 Cycle Power. The power requirements shall be measured on the 60 cycle feeder of the motor-alternators. The measurements shall be taken on a portable type

THIS MATERIAL CONTAINS INFORMATION AFFECTING THE NATIONAL DEFENSE OF THE UNITED STATES WITHIN THE MEANING OF THE ESPIONAGE LAWS, TITLE 18, U.S.C., SECTIONS 793 AND 794, THE TRANSMISSION OR REVELATION OF WHICH IN ANY MANNER TO AN UNAUTHORIZED PERSON IS PROHIBITED BY LAW.

CONFIDENTIAL

recording wattmeter. Potential and current transformers shall be supplied and installed by the subcontractor. Correlation to real time shall be provided on the charts Chart speed shall be two (2) inches per hour.

N7975E - OSTF 2, 28 VDC Current. These measurements shall be obtained from the ammeter in the Launch Control power supply by the use of the shunt used for the control ammeter. They shall be recorded on suitable instruments within the Instrumentation Room.

The additional measurements required by objectives 001-13, 001-14, 001-15, 001-16 and 001-17 will also be done by a subcontractor specializing in electrical power measurements. These measurements in addition to all of the above measurements, comprise a complete power profile of the site.

THIS MATERIAL CONTAINS INFORMATION AFFECTING THE NATIONAL DEFENSE OF THE UNITED STATES WITHIN THE MEANING OF THE ESPIONAGE LAWS, TITLE 18, U.S.C., SECTIONS 793 AND 794, THE TRANSMISSION OR REVELATION OF WHICH IN ANY MANNER TO AN UNAUTHORIZED PERSON IS PROHIBITED BY LAW.

~~CONFIDENTIAL~~

REVISION "D" CHANGES - FACILITY

The information contained under Discussion of Facility Instrumentation, Section II should be referred to for description of reasoning used in establishing system instrumentation configuration.

The text is still applicable except as amended below.

Launch Control

The following sequence measurements have been added via Launch Control in order to obtain data in the event of a failure:

N7046X	SILO DOORS OPEN
N7047X	SILO DOORS CLOSED
N7500X	ZONE CHECK LIMIT SWITCH CLOSED
N7501X	1000 IN LIMIT SWITCH CLOSED
N7502X	HIGH SPEED DECELERATION SWITCH CLOSED
N7503X	UPPER OVERSPEED ZONE LIMIT SWITCH CLOSED
N7504X	OVERSPEED SENSOR ENERGIZED
N7505X	BOILOFF VALVE CLOSED
N7506X	DIFFERENTIAL PRESSURE NOT LOW
N7507X	MISSILE LIFT COMMIT START
N7508X	AUTOMATIC
N7509X	READY FOR COMMIT
N7510X	POWER TO INTERNAL
N7511X	POWER TO EXTERNAL
N7512X	COMMIT LOCKUP
N7513X	MISSILE LIFT DOWN & LOCKED
N7514X	AUTOPILOT ON-AMBER
N7515X	LOWER FUEL TANK PRESSURE
N7516X	RAISE FUEL TANK PRESSURE

THIS MATERIAL CONTAINS INFORMATION AFFECTING THE NATIONAL DEFENSE OF THE UNITED STATES WITHIN THE MEANING OF THE ESPIONAGE LAWS, TITLE 18, U.S.C., SECTIONS 793 AND 794, THE TRANSMISSION OR REVELATION OF WHICH IN ANY MANNER TO AN UNAUTHORIZED PERSON IS PROHIBITED BY LAW

CONFIDENTIAL

N7517X	GUIDANCE FAIL MARGINAL
N7518X	AUTOPILOT FAIL MARGINAL
N7519X	FLIGHT PROGRAMMER SAFE
N7520X	INSTRUMENT AIR BELL 50
N7521X	AUTOPILOT FAIL
N7522X	HELIUM VALVE 14 OPEN
N7523X	DC AT MISSILE
N7524X	RE-ENTRY VEHICLE BATTERY TEMP
N7525X	VENT HELIUM BOTTLES
N7526X	HYDRAULIC PRESSURE
N7527X	GUIDANCE FAIL
N7528X	MISSILE LIFT UP & LOCKED
N7529X	PNEUMATICS INTERNAL - GREEN
N7530X	PNEUMATICS PHASE 2 - AMBER
N7531X	HELIUM LOAD - AMBER
N7532X	PROGRAMMER ARMED - AMBER
N7533X	ENGINE START - AMBER
N7534X	GUIDANCE COMMIT - GREEN
N7535X	POWER INTERNAL - GREEN
N7536X	AUTOPILOT TEST - AMBER
N7537X	GUIDANCE READY - AMBER
N7984X	MISSILE AWAY
N7985X	MISSILE ON STAND
N7048X	POD HEATER 2 RATE GYRO

SILO AMBIENT PRESSURE INSTRUMENTATION

Six ambient pressure measurements have been added to record ambient pressure at different levels in the silo during a launch. These measurements are N7230P through N7235P. In the event of an over-pressure during launch resulting in damage to the silo structure or ducting, the above measurements would provide a criteria for redesign.

THIS MATERIAL CONTAINS INFORMATION AFFECTING THE NATIONAL DEFENSE OF THE UNITED STATES WITHIN THE MEANING OF THE ESPIONAGE LAWS, TITLE 18, U.S.C., SECTIONS 793 AND 794, THE TRANSMISSION OR REVELATION OF WHICH IN ANY MANNER TO AN UNAUTHORIZED PERSON IS PROHIBITED BY LAW.

CONFIDENTIAL

BENDIX INVERTER INSTRUMENTATION

Three temperature measurements, E7010T, E7011T, and E7012T, have been added to a Bendix Inverter on Missile 83F. These measurements will provide data for failure analysis of Bendix Inverters under normal operating conditions. Normal operating conditions could not be exactly simulated in the lab so that a failure of the Bendix Inverter resulted. Since Bendix Inverters have failed in the field, it is desirable to obtain data on their operation under normal operating conditions.

TRAILING WIRE INSTRUMENTATION

The following measurements have been added via a trailing wire umbilical.

A1217P	HEAT SHIELD DIFFERENTIAL PRESSURE QUAD 2
A1218P	HEAT SHIELD DIFFERENTIAL PRESSURE Y-Y AXIS
A1219P	HEAT SHIELD DIFFERENTIAL PRESSURE QUAD 1
A1220P	HEAT SHIELD DIFFERENTIAL PRESSURE QUAD 3
A1194T	HEAT SHIELD FORWARD QUAD 4
A1195T	HEAT SHIELD FORWARD QUAD 2
A1780Y	ARMA POD ACOUSTIC COMPARTMENT
F1145P	SUSTAINER CONTROL HELIUM BOTTLE DISCHARGE
F1247T	BOOSTER TANK HELIUM BOTTLE
F1290T	SUSTAINER CONTROL HELIUM BOTTLE
P1529D	SUSTAINER MAIN LOX VALVE
P1830D	SUSTAINER FUEL VALVE POSITION
P1206O	SUSTAINER ENGINE LOX DOME
P1208O	B1 ENGINE LOX DOME
P1209O	B2 ENGINE LOX DOME
P1002P	B1 FUEL PUMP INLET
P1006P	SUSTAINER THRUST CHAMBER
P1038P	B2 FUEL PUMP DISCHARGE
P1039P	B1 FUEL PUMP DISCHARGE
P1056P	SUSTAINER LOX PUMP INLET
P1059P	B2 THRUST CHAMBER
P1060P	B1 THRUST CHAMBER
P1091P	B1 LOX INJECTOR MANIFOLD

THIS MATERIAL CONTAINS INFORMATION AFFECTING THE NATIONAL DEFENSE OF THE UNITED STATES WITHIN THE MEANING OF THE ESPIONAGE LAWS, TITLE 18, U.S.C., SECTIONS 793 AND 794, THE TRANSMISSION OR REVELATION OF WHICH IN ANY MANNER TO AN UNAUTHORIZED PERSON IS PROHIBITED BY LAW

CONFIDENTIAL

P1092P	B2 LOX INJECTOR MANIFOLD
P1155P	B1 GAS GENERATOR COMBUSTOR
P1184P	B2 GAS GENERATOR COMBUSTOR
P1200P	ENGINE COMPARTMENT AMBIENT
P1337P	SUSTAINER GAS GENERATOR LOX INJECTOR MANIFOLD
P1351P	SUSTAINER LOX INJECTOR MANIFOLD
P1463P	SUSTAINER GAS GENERATOR FUEL INJECTOR MANIFOLD
P1325T	ENGINE COMPARTMENT AMBIENT
P1530T	SUSTAINER LOX PUMP INLET
P1711T	B1 NACELLE AMBIENT
P1712T	B2 NACELLE AMBIENT
P1051Y	ENGINE COMPARTMENT ACOUSTIC

The measurements listed above were chosen to provide data on problem areas of the different missile systems. The trailing wire umbilical consists of an eighty-five wire cable which is explosively ejected from the missile upon receipt of an electrical signal which occurs after approximately forty feet of missile travel. Should the cable not be ejected electrically, a mechanical lanyard provides a means of backup. A trailing wire cable was devised in order to provide additional means of obtaining missile parameter data during critical portions of the launch sequence. With the trailing wire cable, data may be obtained while raising the missile to its launch position as well as through engine ignition and liftoff. These areas of the launch sequence usually cannot be obtained until the missile is airborne and after which, all missile parameter launch control data is lost.

THIS MATERIAL CONTAINS INFORMATION AFFECTING THE NATIONAL DEFENSE OF THE UNITED STATES WITHIN THE MEANING OF THE ESPIONAGE LAWS, TITLE 18, U.S.C., SECTIONS 793 AND 794, THE TRANSMISSION OR REVELATION OF WHICH IN ANY MANNER TO AN UNAUTHORIZED PERSON IS PROHIBITED BY LAW

~~CONFIDENTIAL~~

DATA GATHERING SYSTEMS

I. GENERAL

The landline instrumentation system will provide visual indication and recordings in the Launch Operations Building of physical and electrical parameters originating at the various ground support equipment, missile and associated launch control equipment. The system will provide magnetic tape recording for subsequent playback. The system will have a programming flexibility such that the measurements and recordings channels can be rapidly changed from test to test.

II. FM MAGNETIC TAPE RECORDER

The FM recording system will consist of 72 channels recorded on 12 magnetic tape tracks. One tape transport will provide continuous recording at 60 inches per second. The tape transport will accommodate either 10-1/2 or 14 inch reels, providing 9 and 21 minutes, respectively, of recording time. The frequency response will extend to 2100 CPS. Accessory information consisting of voice, timing, control tones and speed-lock will be recorded on tape track 7. A limited "on site" playback capability for FM data will be provided as an adjunct to the existing San Diego Data Processing Station.

III. DIGITAL

The digital system will provide magnetic tape recording of 20 channels of analog signals in digital form. It will supplement other basic recording methods in providing a system with greater resolution and accuracy. Commutation is by solid state and may be set in high, medium and low speeds to digitize from 66 times per second to 1 time per second. Signal conversion is performed with a 12 bit plus sign code for a full scale range of 999. In addition, a time code and record frame number may be recorded. The tape format will be compatible with the IBM 7090 computer. The digital system will be available for use for Part 2 testing.

THIS MATERIAL CONTAINS INFORMATION AFFECTING THE NATIONAL DEFENSE OF THE UNITED STATES WITHIN THE MEANING OF THE ESPIONAGE LAWS, TITLE 18, U.S.C., SECTIONS 793 AND 794, THE TRANSMISSION OR REVELATION OF WHICH IN ANY MANNER TO AN UNAUTHORIZED PERSON IS PROHIBITED BY LAW.

CONFIDENTIAL

~~CONFIDENTIAL~~

IV. GRAPHIC RECORDERS

The primary purpose of graphic recorders is to provide critical missile parameters in visual recorded fashion which will facilitate determining operational status of missile and ground systems prior to and during a firing. Data gathered by this means are also utilized to a limited extent for post-test analysis.

A. Oscillograph Recorders

Oscillographs are used to record functions requiring high frequency response but no real-time display. A photographic method of simultaneously recording channels on a light-sensitive paper is employed. This method provides response to 2000 CPS. The oscillograph to be used at OSTF #2 is a Heiland Visicorder with self-developing paper.

B. Sanborn Recorders

For functions requiring a higher response than is available from Brown recorders and real-time display as well, a "hot-stylus" passing over heat sensitive paper is used. The response of this type of recorder is 40 CPS.

C. Brown Recorders

Single channel Brown recorders will be used. The frequency response is low (1 CPS) and therefore limited to slowly varying functions. Information is easily read in real time. The accuracy of the Brown recorder is generally the highest of the available recorder types.

D. Sequence Recorders

In addition to analog and frequency measurement requirements, there are event type measurement requirements. Brush operations recorders will be used for this purpose. Each recorder has 100 pens on a single sheet of moving graph paper. The recorders will be used to monitor the activations and deactivations of various relays, switches and other types of sequence functions.

THIS MATERIAL CONTAINS INFORMATION AFFECTING THE NATIONAL DEFENSE OF THE UNITED STATES WITHIN THE MEANING OF THE ESPIONAGE LAWS TLE
18, U.S.C., SECTIONS 793 AND 794, THE TRANSMISSION OR REVELATION OF WHICH IN ANY MANNER TO AN UNAUTHORIZED PERSON IS PROHIBITED B LAW

~~CONFIDENTIAL~~

Graphic Recorder Capability

Oscillograph	6
Sanborn	24
Brown	18
Brush (event)	196

V. INSTRUMENTATION CALIBRATION

The calibration technique for instrumentation does away with the need for highly accurate calibration facilities at the site. The Standards Laboratory at Astronautics calibrates the transducers which convert the measurement sensed into an analog voltage equivalent. The linear relationship between measurement sensed and transducer voltage output is expressed in slope intercept form and transmitted to the test sites. With S1 and S2 as parameter levels, E_1 and E_2 corresponding transducer output levels, and

$$\frac{S_2 - S_1}{E_1 - E_1} = m$$

the slope of the calibration curve, any calibrated range can be established knowing m, the intercept b and the related units (i.e., PSI and volts, etc.). For landline recorder calibration, and to determine recording system linearity, electrical signals are recorded on each channel just prior to test data. These signals establish the lower and upper limit of the recorder range.

THIS MATERIAL CONTAINS INFORMATION AFFECTING THE NATIONAL DEFENSE OF THE UNITED STATES WITHIN THE MEANING OF THE ESPIONAGE LAWS, T
18, U.S.C., SECTIONS 793 AND 794. THE TRANSMISSION OR REVELATION OF WHICH IN ANY MANNER TO AN UNAUTHORIZED PERSON IS PROHIBITED BY

~~CONFIDENTIAL~~

CONFIDENTIAL

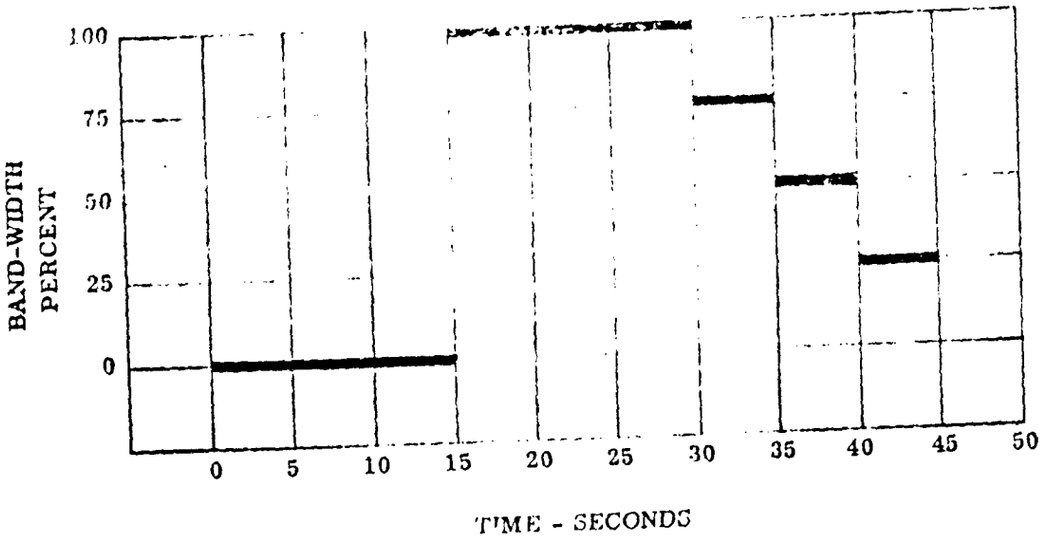

The calibration signals are generated by the Excitation, Calibration and Normalization (ECAN) network. The ECAN also provides transducer excitation, source matching and signal normalization.

VI. MISCELLANEOUS LAUNCH AREA DATA

In addition to the specific measurements discussed there are other special support data required, for back-up and supplementary use. This includes data which will be used for evaluating testing and establishing conditions under which the testing was performed. Also visual monitoring to gain sequential, documentary, and reliability data will be made possible through the media of closed circuit television, and motion pictures.

A. Timing

At OSTF #2 when testing components and during normal countdowns, not involving a launch, a site installed timing generator which recycles at 900 seconds will

THIS MATERIAL CONTAINS INFORMATION AFFECTING THE NATIONAL DEFENSE OF THE UNITED STATES WITHIN THE MEANING OF THE ESPIONAGE LAWS, TITLE 18 U.S.C. SECTIONS 793 AND 794. THE TRANSMISSION OR REVELATION OF WHICH IN ANY MANNER TO AN UNAUTHORIZED PERSON IS PROHIBITED BY LAW.

CONFIDENTIAL

be utilized to provide time correlation. When a launch is conducted Range Timing will be used and will be recorded on FM tape for post-test analysis. An explanation of the 3-digit binary timing code which is used with both timing systems can be found on Fig. 22 in Section 7. This code is a 12-bit, 100 PPS, 1000 cycle amplitude modulated timing code. The time word is contained in the 12 bits, 4 bits for each of three digits contained in the time word, and the 100 PPS are amplitude modulated on a 1000 cps carrier. The AM modulation is 3.3 to 1 with the pulses at a 10 volt level and the no pulses at a 3 volt level. The three digits represent units, tens, and hundreds of seconds by using a binary-coded decimal (8-4-2-1). A reference pulse always appears first and indicates the beginning of the time word. The leading edge of this pulse is the point on the trace at which the time occurred. No other part of the time word is time coherent. To read the code one must recognize the difference in pulse widths of three types of pulses: the reference pulse is five units wide, a binary "1" is three units wide and a binary "0" pulse is one unit wide

B. Weather

Certain weather observations are to be made of surface conditions at the time that testing is being carried on to assist in establishing standard conditions for test to test correlation. These observations will consist of temperature, barometric pressure, relative humidity, wind speed and wind azimuth. The measurements of wind velocity will determine if the missile may be raised, or not, thus defining weather conditions hazardous to test fulfillment. This data will be taken by Air Force personnel.

C. Television

Seven T.V. cameras will be utilized at OSTF-2 to obtain data for Human Engineering evaluation. One camera (N7747N) will be installed in the launch control room to monitor the Launch Control operator and Console. Three cameras (N7751N, N7752N, N7753N) will be located at grade level around the silo cap to monitor crew operations such as resupply, missile mating, checkout. Movable T.V. cameras (N7748N, N7749N, N7750N) will be used at appropriate levels in the silo to observe crew functions during various tests.

THIS MATERIAL CONTAINS INFORMATION AFFECTING THE NATIONAL DEFENSE OF THE UNITED STATES WITHIN THE MEANING OF THE ESPIONAGE LAWS, TITLE 18, U.S.C., SECTIONS 793 AND 794. THE TRANSMISSION OR REVELATION OF WHICH IN ANY MANNER TO AN UNAUTHORIZED PERSON IS PROHIBITED BY LAW

CONFIDENTIAL

D. Motion Picture Coverage

In order to verify the proper operation of the launch-platform-to-silo disconnect panels, two cameras (U7019N, U7020N) will be used Four other cameras (L7009N, L7010N, L7011N, L7012N) will be located above ground to obtain data on umbilical ejections, and missile raising operations.

Alignment group tilt will be measured with a tilt monitoring display unit mounted directly to the alignment group. Pictures of the leveling bubbles, which are a part of this unit, will be obtained via movie cameras N7983N.

E. Audio Recordings

Kellogg Switchboard and Supply Company will provide 10 channels of magnetic tape recording for a permanent record of all intercommunications traffic.

F. A portable light meter (N7532D) and portable sound intensity meter (N75334Y) will be used at various levels in the silo for Human Engineering evaluation of environmental conditions.

VII. AIRBORNE DATA GATHERING SYSTEM

Each OSTF missile will have a factory installed Instrumentation and Range Safety System (IRSS) to provide data from which gross weapon system performance can be determined and to furnish a means for ground command missile destruction when necessary.

The airborne data system which will be employed is a PAM/FM/FM telemeter using an RF carrier which is modulated for information carrying purposes and also serves as an RF signal stimulus for two AME Cotar Ground stations. The Cotar system will provide a "real time" tracking input to the range safety network to indicate missile flight path with respect to predetermined limits.

THIS MATERIAL CONTAINS INFORMATION AFFECTING THE NATIONAL DEFENSE OF THE UNITED STATES WITHIN THE MEANING OF THE ESPIONAGE LAWS, TITLE 18, U.S.C., SECTIONS 793 AND 794, THE TRANSMISSION OR REVELATION OF WHICH IN ANY MANNER TO AN UNAUTHORIZED PERSON IS PROHIBITED BY LAW.

CONFIDENTIAL

Sixty measurements of missile performance parameters are to be made via the IRSS telemeter. Astronautics is to provide the transducers, signal conditioning (except for the inertial guidance measurements), and cabling necessary for the selected measurements. Ground rules governing selection of the measurements included the following points.

A. Only gross malfunction of major missile systems is of interest. (No measurement of an R&D nature is allowed.)

B. Measurement changes will be held to a minimum.

C. Installation and checkout of the measurements should be simple - inaccessible locations should be avoided.

D. Minimum cost consistent with intent.

Report AZC-27-068 contains a detailed description of each of the selected measurements. Additional information, i.e., channel assignment, Astronautics installation drawing numbers, etc., is contained in the tabulations of the IRSS measurements, Sections 6 and 7 of that report.

THIS MATERIAL CONTAINS INFORMATION AFFECTING THE NATIONAL DEFENSE OF THE UNITED STATES WITHIN THE MEANING OF THE ESPIONAGE LAWS, TITLE 18, U.S.C., SECTIONS 793 AND 794, THE TRANSMISSION OR REVELATION OF WHICH IN ANY MANNER TO AN UNAUTHORIZED PERSON IS PROHIBITED BY LAW

CONFIDENTIAL

This page intentionally left blank.

THIS MATERIAL CONTAINS INFORMATION AFFECTING THE NATIONAL DEFENSE OF THE UNITED STATES WITHIN THE MEANING OF THE ESPIONAGE LAWS, TITLE 18, U.S.C., SECTIONS 793 AND 794, THE TRANSMISSION OR REVELATION OF WHICH IN ANY MANNER TO AN UNAUTHORIZED PERSON IS PROHIBITED BY LAW.

~~CONFIDENTIAL~~

TABULATION OF OSTF-2 DATA SOURCES

1. Maintenance and Operational Logs

   A. Maintenance Inspection Record (AFTO 26B)
   B. Maintenance Discrepancy/Production Credit Record (AFTO 130C-4)
   C. A/F Maintenance Log (MAB)
   D. A/F Maintenance Log (PAD)
   E. A/F Maintenance Log MAPCHE
   F. Daily Maintenance Service Card A365-1
   G. Preventative Maintenance Surveillance Daily Check-Off Sheet
   H. Periodic Equipment Check Sheets
   I. Rocketdyne GSE Log
   J. Calibration Report, Form 576-3
   K. Fluids and Gas Consumption
   L. A/F Unsatisfactory Report and Supplement Sheet (AFTO Form 29 and 29a)

2. Change Report Forms

   A. ECP's - Engineering Change Proposal, Form A78
   B. EO's - Engineering Order, Form A1218
   C. TCTO - Time Compliance Technical Order
   D. Field Service Bulletin (Rocketdyne in House)
   E. CIC Schedule Summary, Form A1379
   F. Drawing Summary, Form A1378
   G. DCB Change Summary, Form A1535
   H. CIC Control Card, Form 576-4-66
   I. ECP Status Card, Form 576-4-65
   J. Request Change Form DAC 576-8-3-0
   K. DWG Change Request, GE-MSVD

3. Inspection Report Forms

   A. F&CD - Failure and Consumption Data Form CV-A-131, BMD 0-50 and Associate Contractor's F&CD
   B. BOI's - Break of Inspection, Form A233

THIS MATERIAL CONTAINS INFORMATION AFFECTING THE NATIONAL DEFENSE OF THE UNITED STATES WITHIN THE MEANING OF THE ESPIONAGE LAWS, TITLE 18, U.S.C., SECTIONS 793 AND 794, THE TRANSMISSION OR REVELATION OF WHICH IN ANY MANNER TO AN UNAUTHORIZED PERSON IS PROHIBITED BY LAW.

~~CONFIDENTIAL~~

~~CONFIDENTIAL~~

C. Temporary Removal Tag, Form A2313-2
D. Inspection Clean-up Sheet, Form A836
E. BOI Index
F. Assembly List Shortage Log, Form A1815
G. Desiccant Log
H. Leak Report Log
I. Engine Operating Time Log
J. Engine Log
K. Inspection Rejection Index, Form 280-156
L. AFTO Series 130 Forms
M. Inspection Missile Cleaning Log, Form 576-4-47
N. Component Installation Record - GSE/GOE/RPIE, Form 576-4-73
O. Transducer Installation Log, Form 576-4-14

4. Discrete Events (Completely Documented in Tabulations, Sections 8, 9).

A. Valve Openings
B. Specific Countdown Events
C. Pressure Switch Sequence
D. Presence of Liquid and Liquid Levels
E. Communication System

5. Analog (Completely Documented in Tabulations, Sections 8, 9).

6. Digital (Completely Documented in Tabulations, Sections 8, 9).

7. MAPCHE (Tapes)

8. Visual Operation

A. Meters
B. Lights
C. Contamination Survey
Fluids Purity (GN_2, Helium, Fuel, LOX) - Smith-Emery Company (SECO) Field Laboratory Report

THIS MATERIAL CONTAINS INFORMATION AFFECTING THE NATIONAL DEFENSE OF THE UNITED STATES WITHIN THE MEANING OF THE ESPIONAGE LAWS, TITLE 18, U.S.C., SECTIONS 793 AND 794, THE TRANSMISSION OR REVELATION OF WHICH IN ANY MANNER TO AN UNAUTHORIZED PERSON IS PROHIBITED BY LAW.

~~CONFIDENTIAL~~

9. Motion Picture Coverage

10. Television

General Surveillance

A. LSB
B. LOB Consoles

11. Auditory - Communication Ringing Alarm

12. PROCEDURES FORMS

A. Personnel Performance Check List
B. Interview Questionnaires (Post-Test Interview Form)
C. Difficulty Summaries (Deviation/Difficulty Report)
D. Summary Analysis Report
E. Human Engineering Check List
F. Deviation/Difficulty Log
G. Safety Support Notation, Form A1560
H. Supervisor's Report of Accident Investigation, Form A1066
I. Field Service Report, Form A416

13. PERSONNEL SUBSYSTEMS FORMS

For a complete description, refer to Space Technology Laboratories, Inc., Document GM 6300.5-1060

14. RELIABILITY FORMS

A. Failure and Consumption Data Reports, Form CV-A A131, BMD 0-50, NAA-609-P, GE-MO-1051, Arma 50-71, AFTO Form 130C, KSS F&CD Form
B. Operation and Life Record, Form A-18
C. Component Operation and Life Record, Form 2295
D. System Operation and Life Record, Form 2296
E. Reliability Action Report (RAR), Form A204
F. Failure Analysis Report (FAR), BMD Form No. 0-51, CV-A Form A-567
G. Reliability Diagnostic Report
H. Reliability Technical Directive, Form A-531

THIS MATERIAL CONTAINS INFORMATION AFFECTING THE NATIONAL DEFENSE OF THE UNITED STATES WITHIN THE MEANING OF THE ESPIONAGE LAWS, TITLE 18, U.S.C., SECTIONS 793 AND 794, THE TRANSMISSION OR REVELATION OF WHICH IN ANY MANNER TO AN UNAUTHORIZED PERSON IS PROHIBITED BY LAW

~~CONFIDENTIAL~~

~~CONFIDENTIAL~~

I. Daily Performance Log, KSS
J. Daily Trouble Record, KSS
K. Failure Report Form, KSS

15. Associate Contractor Reports

A. Rocketdyne

1. Failure and Consumption Data Report
2. Failure Analysis Report
3. Engineering Work Request
4. Rocketdyne Field Service Publication Change Suggestion
5. Field Service Operation Report
6. Certificate of Completion-Form 606W
7. GSE Log Book

B. General Electric, Missile and Space Vehicle Dept. (GE-MSVD)

1. Failure and Consumption Reports, Form MO-1051
2. Field Service Report
3. Failure Analysis Report

C. Kellogg Switchboard and Supply Company (KSS)

1. Corrective Action Request
2. Daily Performance Log
3. Daily Trouble Record
4. Failure Report Form

D. American Bosch Arma (Arma)

1. Daily Activity Report
2. Supplementary Activity Report
3. Failure and Consumption Data Report
4. Historical Record - Technical Instruction Compliance Report
5. Outstanding/Delayed Maintenance Record

THIS MATERIAL CONTAINS INFORMATION AFFECTING THE NATIONAL DEFENSE OF THE UNITED STATES WITHIN THE MEANING OF THE ESPIONAGE LAWS, TITLE 18, U.S.C., SECTIONS 793 AND 794, THE TRANSMISSION OR REVELATION OF WHICH IN ANY MANNER TO AN UNAUTHORIZED PERSON IS PROHIBITED BY LAW

~~CONFIDENTIAL~~

ILLUSTRATIONS

BLANK PAGE

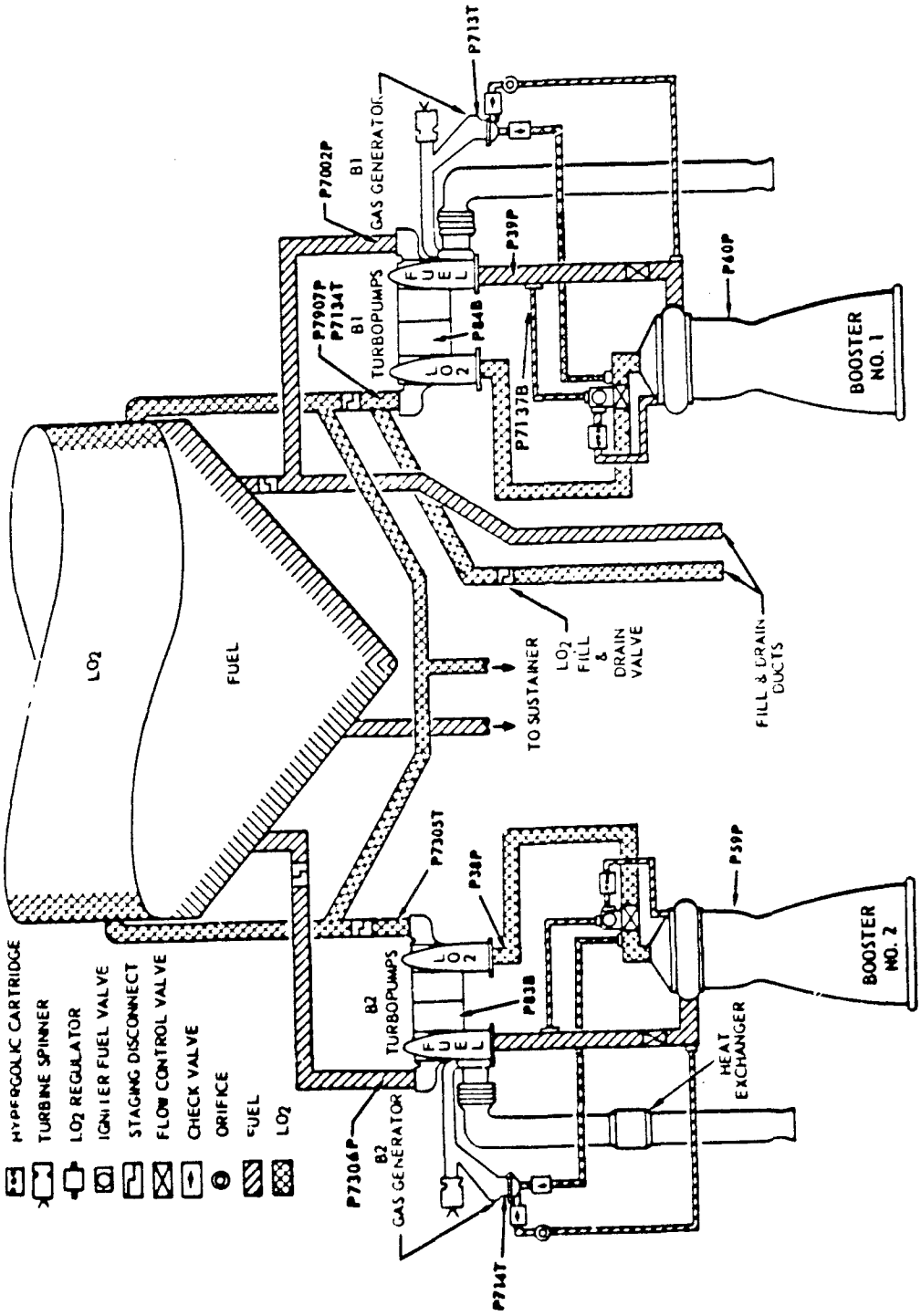

MA-3 BOOSTER ENGINE

THIS MATERIAL CONTAINS INFORMATION AFFECTING THE NATIONAL DEFENSE OF THE UNITED STATES WITHIN THE MEANING OF THE ESPIONAGE LAWS, TITLE 18, U.S.C., SECTIONS 793 AND 794, THE TRANSMISSION OR REVELATION OF WHICH IN ANY MANNER TO AN UNAUTHORIZED PERSON IS PROHIBITED BY LAW

~~CONFIDENTIAL~~

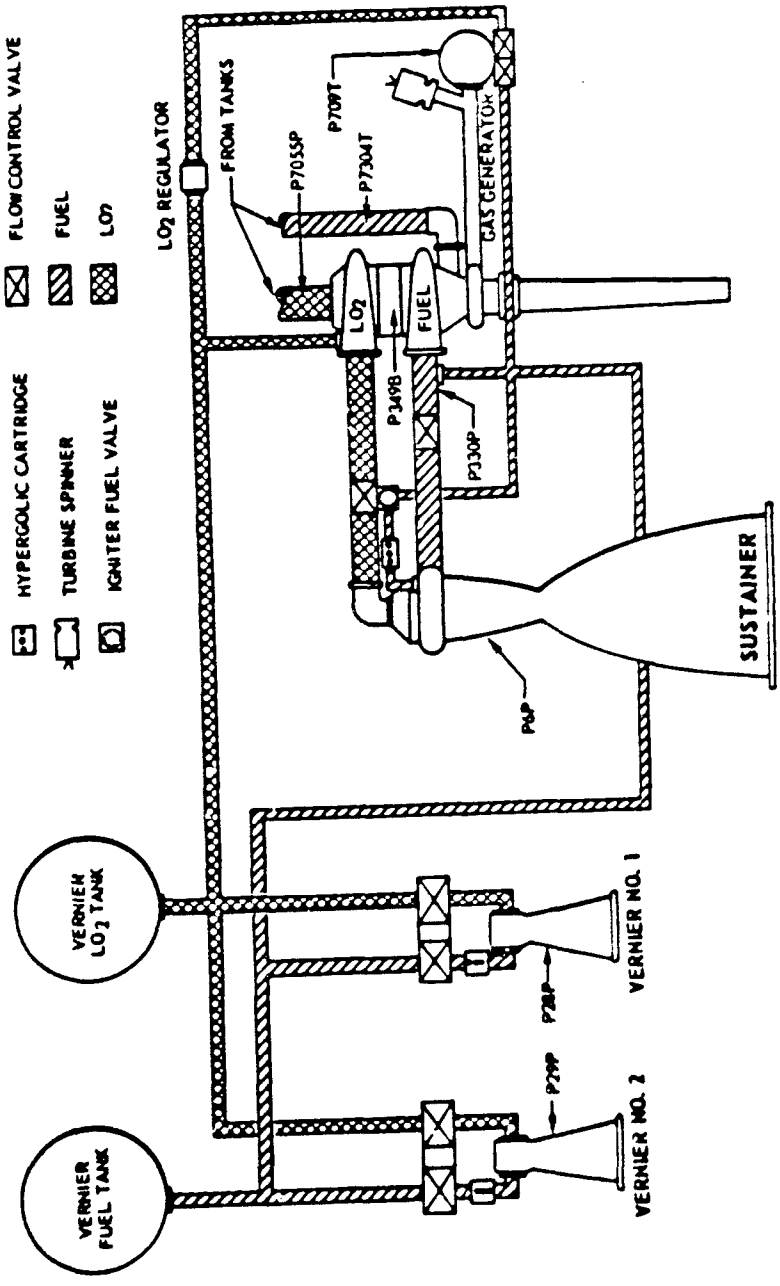

MA-3 SUSTAINER ENGINE

THIS MATERIAL CONTAINS INFORMATION AFFECTING THE NATIONAL DEFENSE OF THE UNITED STATES WITHIN THE MEANING OF THE ESPIONAGE LAWS, TITLE 18, U.S.C., SECTIONS 793 AND 794, THE TRANSMISSION OR REVELATION OF WHICH IN ANY MANNER TO AN UNAUTHORIZED PERSON IS PROHIBITED BY LAW

~~CONFIDENTIAL~~

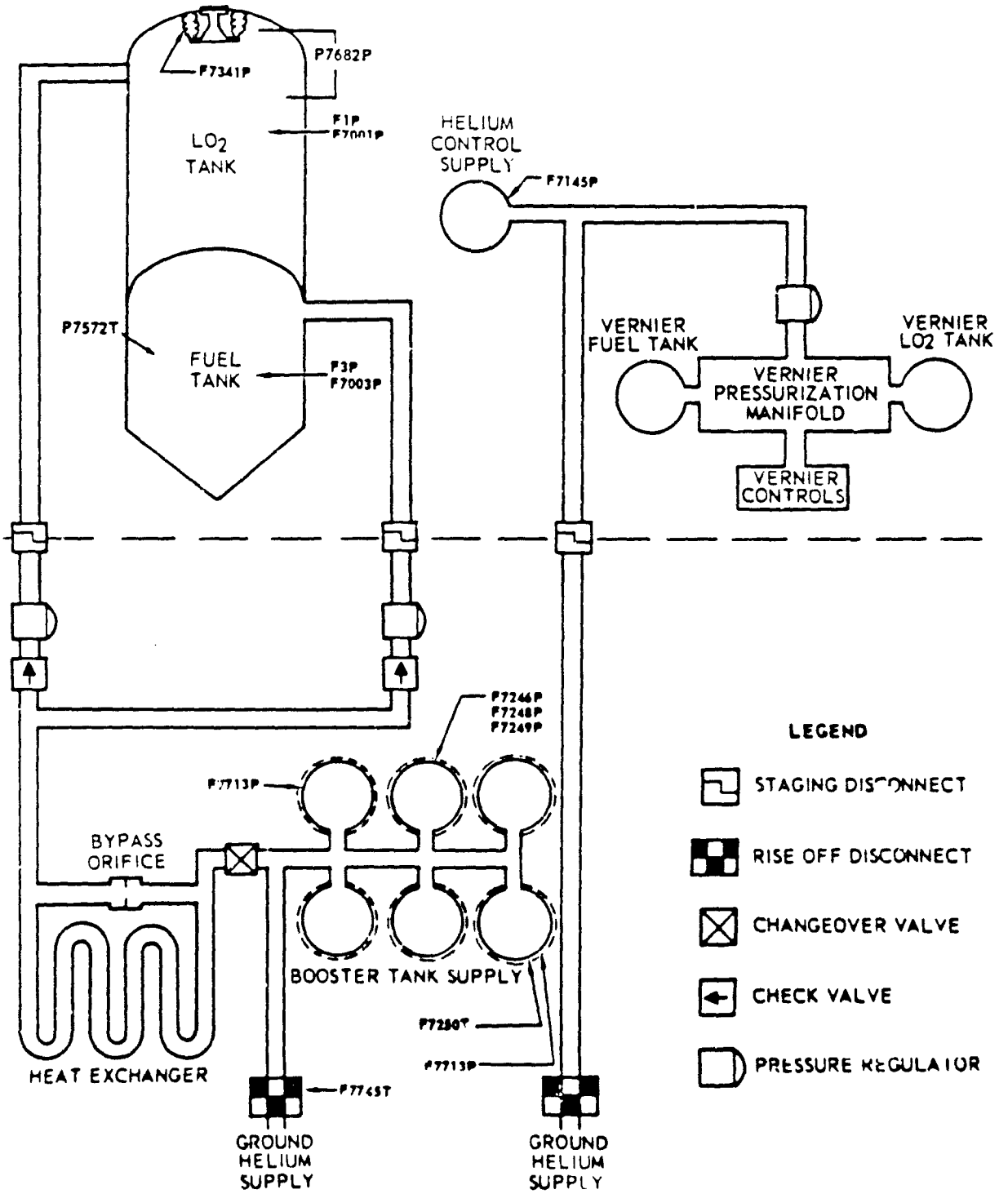

AIRBORNE PNEUMATICS SYSTEM

THIS MATERIAL CONTAINS INFORMATION AFFECTING THE NATIONAL DEFENSE OF THE UNITED STATES WITHIN THE MEANING OF THE ESPIONAGE LAWS, TITLE 18 U.S.C., SECTIONS 793 AND 794. THE TRANSMISSION OR REVELATION OF WHICH IN ANY MANNER TO AN UNAUTHORIZED PERSON IS PROHIBITED BY LAW

~~CONFIDENTIAL~~

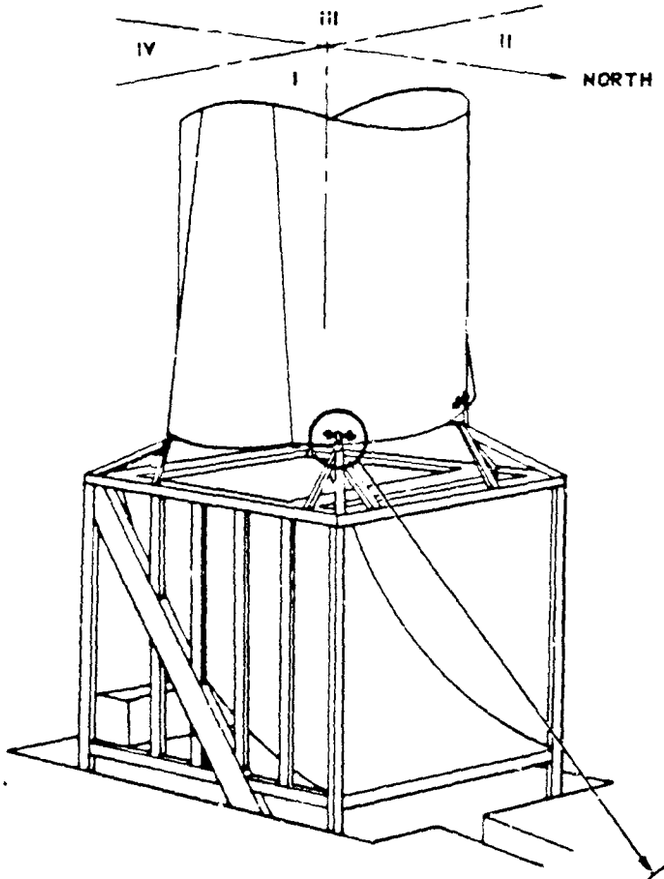

SPRING STRAIN GAGES

QUADRANT	MEAS. NO.
I	N7958S
II	N7959S
III	N7960S
IV	N7961S

LOAD CELLS

QUADRANT	MEAS. NO.
I	N7962S
II	N7963S
III	N7964S
IV	N7965S

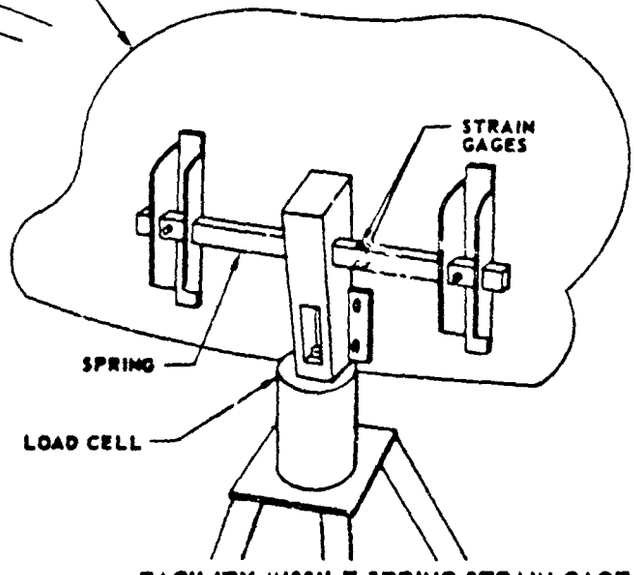

FACILITY MISSILE SPRING STRAIN GAGE AND LOAD CELL INSTRUMENTATION OSTF-2

THIS MATERIAL CONTAINS INFORMATION AFFECTING THE NATIONAL DEFENSE OF THE UNITED STATES WITHIN THE MEANING OF THE ESPIONAGE LAWS, TITLE 18, U.S.C., SECTIONS 793 AND 794. THE TRANSMISSION OR REVELATION OF WHICH IN ANY MANNER TO AN UNAUTHORIZED PERSON IS PROHIBITED BY LAW

~~CONFIDENTIAL~~

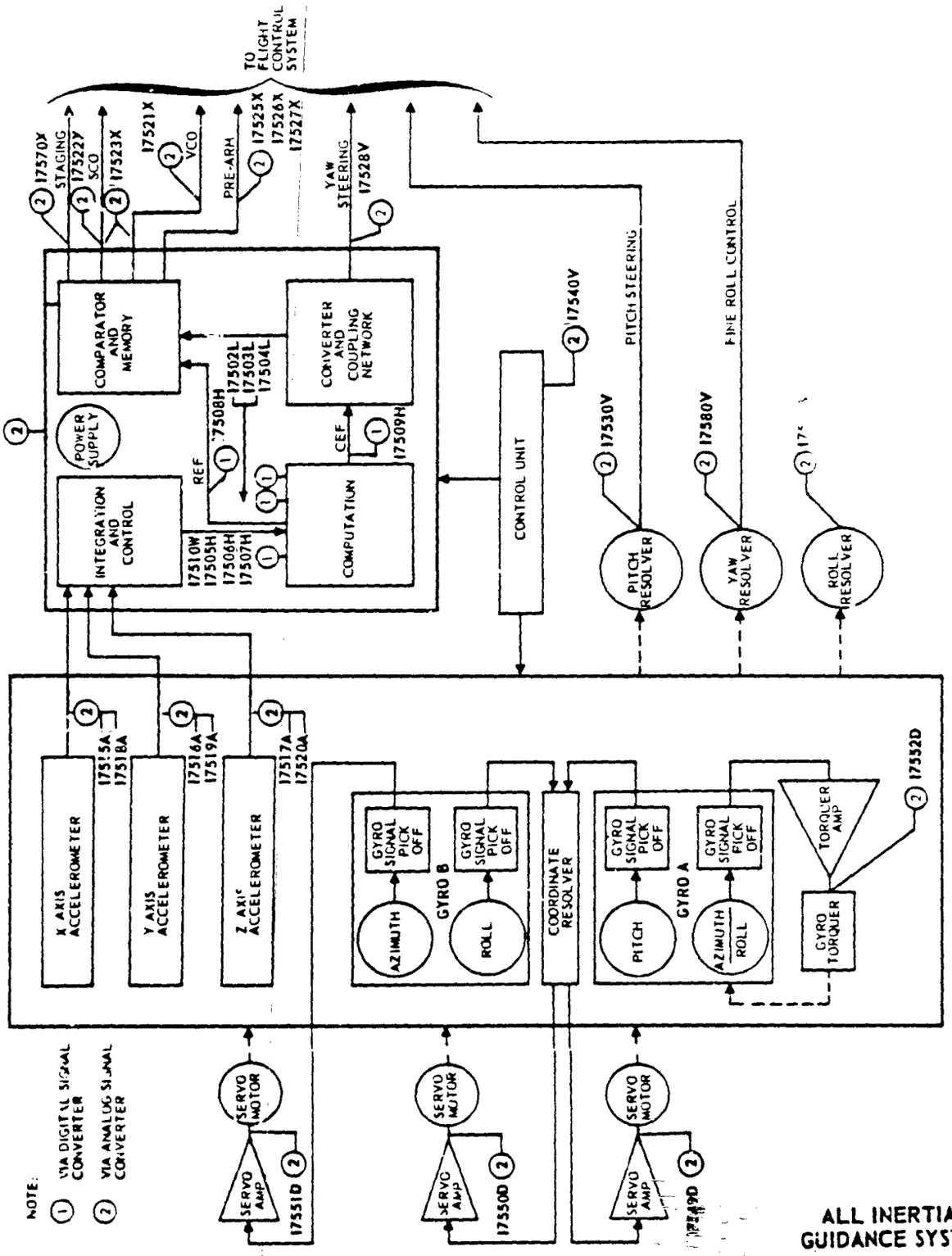

ALL INERTIAL GUIDANCE SYSTEM

THIS MATERIAL CONTAINS INFORMATION AFFECTING THE NATIONAL DEFENSE OF THE UNITED STATES WITHIN THE MEANING OF THE ESPIONAGE LAWS, TITLE 18, U.S.C., SECTIONS 793 AND 794, THE TRANSMISSION OR REVELATION OF WHICH IN ANY MANNER TO AN UNAUTHORIZED PERSON IS PROHIBITED BY LAW.

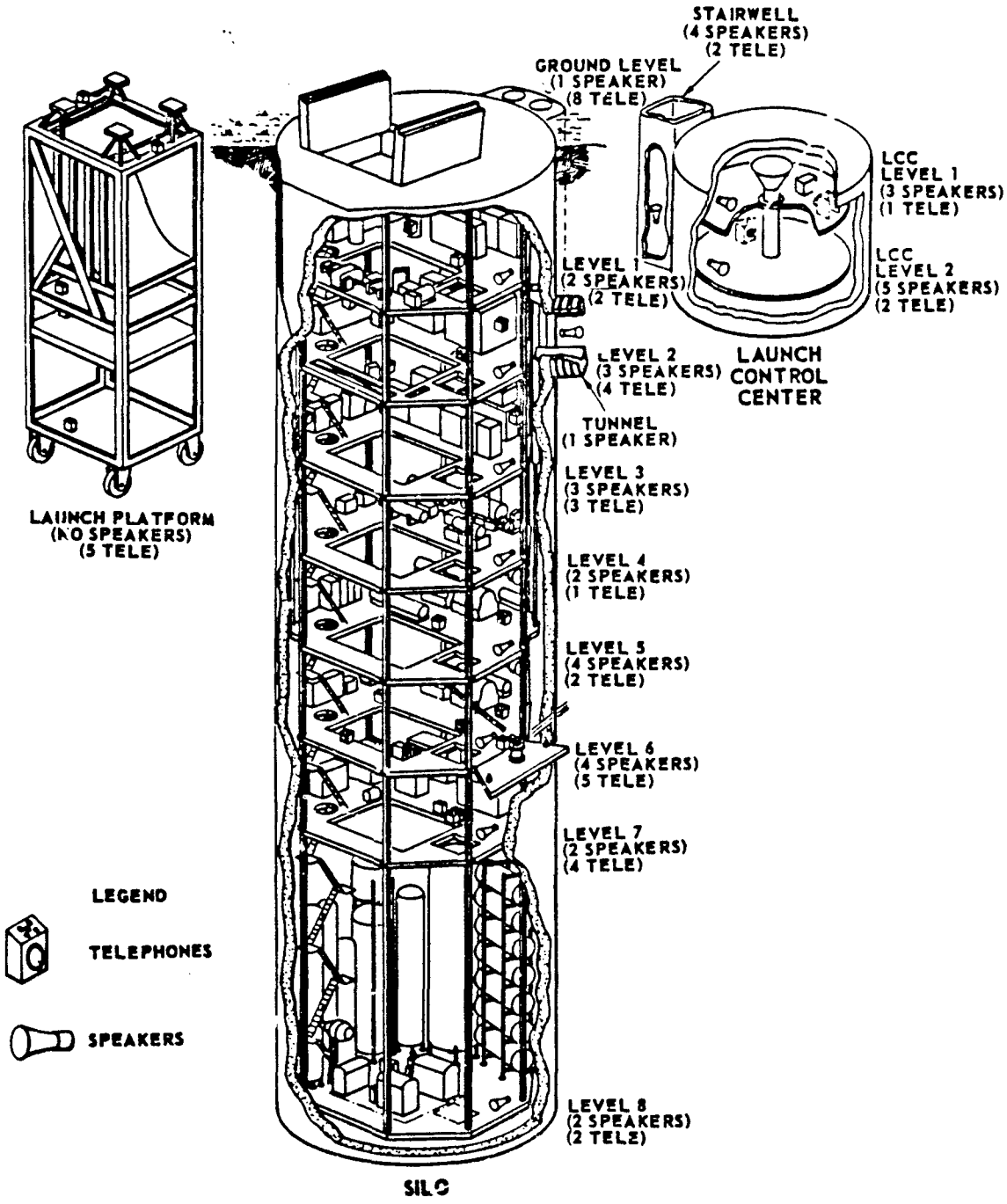

COMMUNICATION SYSTEMS

THIS MATERIAL CONTAINS INFORMATION AFFECTING THE NATIONAL DEFENSE OF THE UNITED STATES WITHIN THE MEANING OF THE ESPIONAGE LAWS, TITLE 18, U.S.C., SECTIONS 793 AND 794, THE TRANSMISSION OR REVELATION OF WHICH IN ANY MANNER TO AN UNAUTHORIZED PERSON IS PROHIBITED BY LAW.

~~CONFIDENTIAL~~

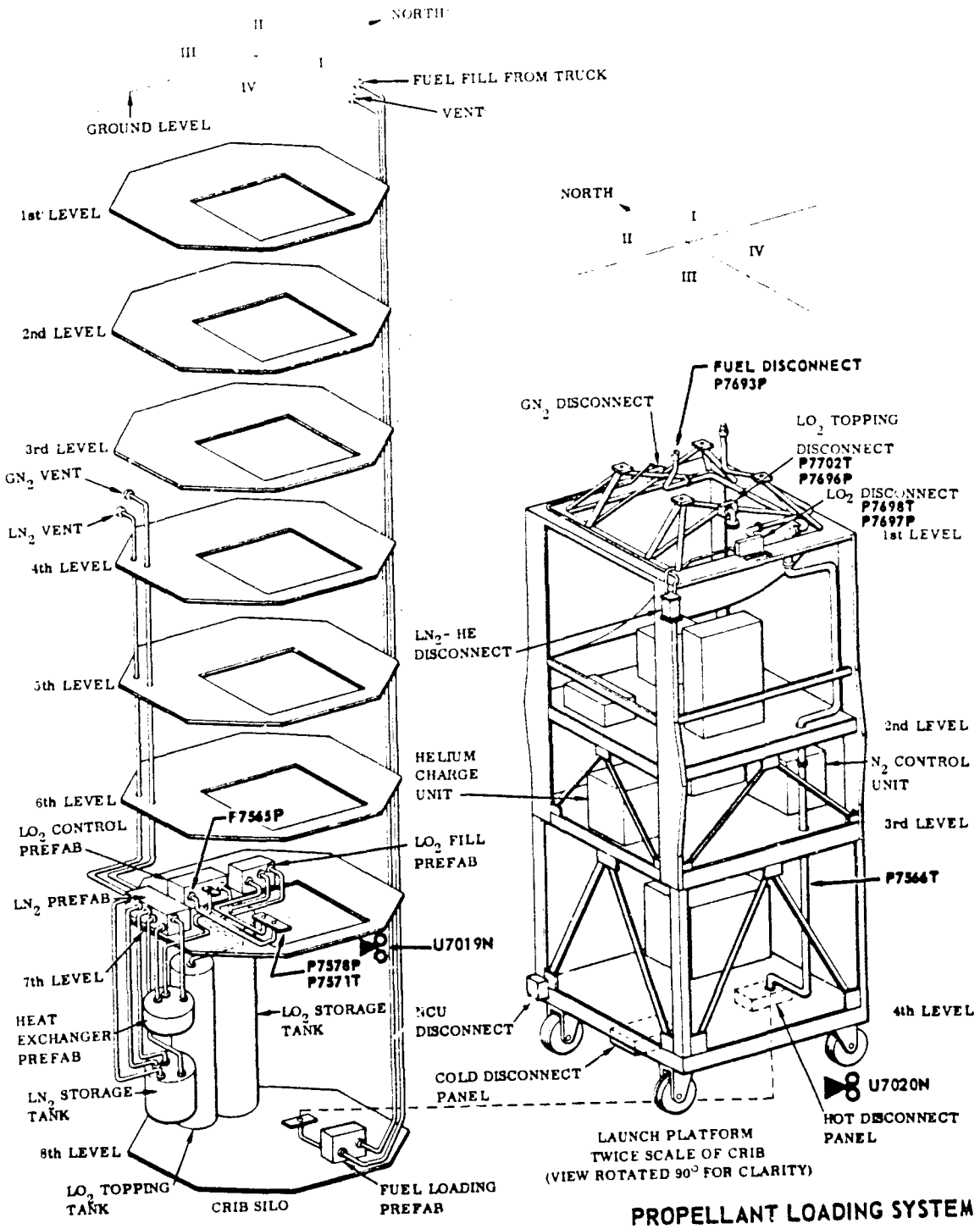

PROPELLANT LOADING SYSTEM

THIS MATERIAL CONTAINS INFORMATION AFFECTING THE NATIONAL DEFENSE OF THE UNITED STATES WITHIN THE MEANING OF THE ESPIONAGE LAWS, TITLE 18, U.S.C., SECTIONS 793 AND 794. THE TRANSMISSION OR REVELATION OF WHICH IN ANY MANNER TO AN UNAUTHORIZED PERSON IS PROHIBITED BY LAW.

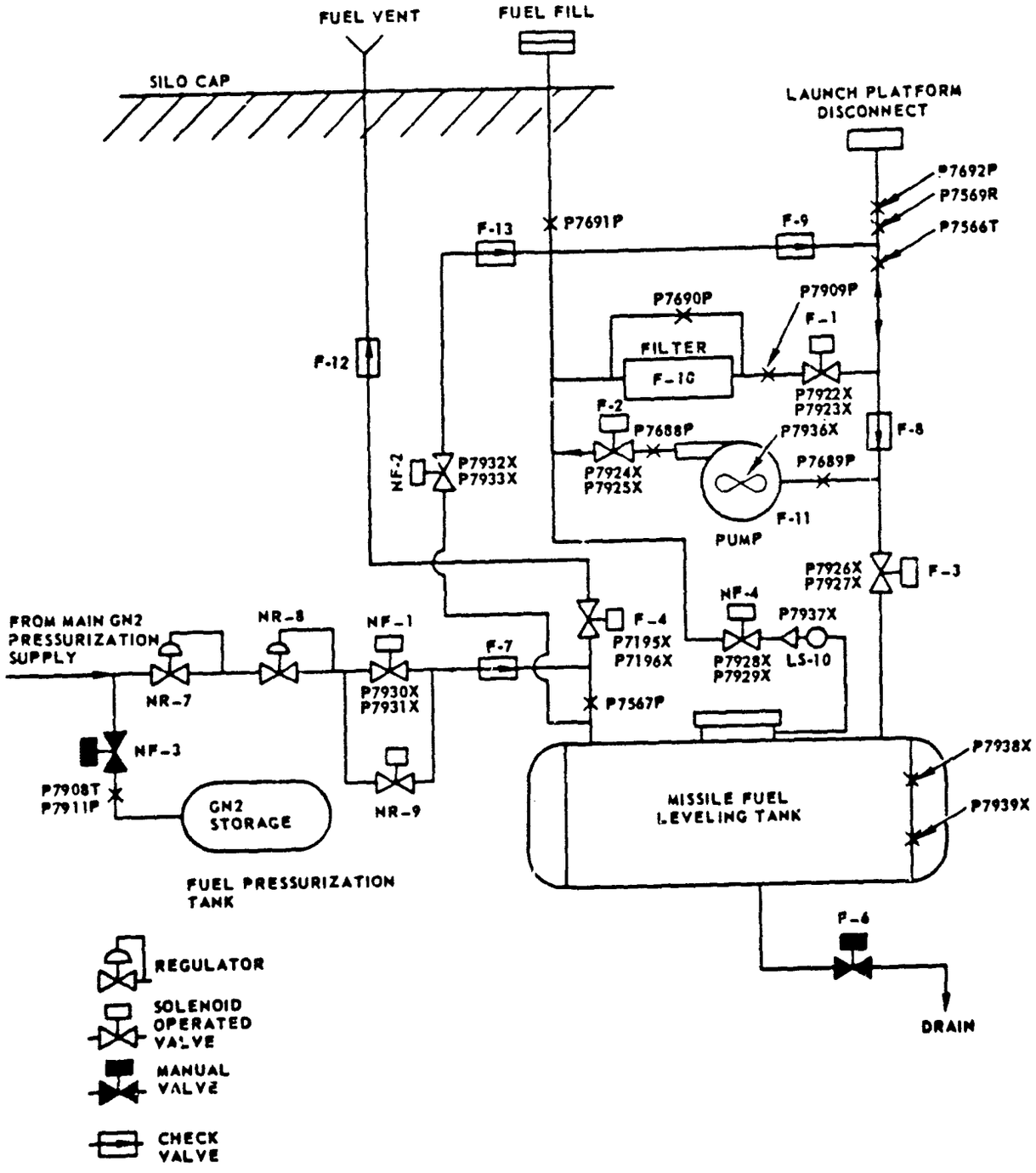

FUEL FLOW SYSTEM INSTRUMENTATION CONFIGURATION

THIS MATERIAL CONTAINS INFORMATION AFFECTING THE NATIONAL DEFENSE OF THE UNITED STATES WITHIN THE MEANING OF THE ESPIONAGE LAWS, TITLE 18, U.S.C., SECTIONS 793 AND 794, THE TRANSMISSION OR REVELATION OF WHICH IN ANY MANNER TO AN UNAUTHORIZED PERSON IS PROHIBITED BY LAW.

~~CONFIDENTIAL~~

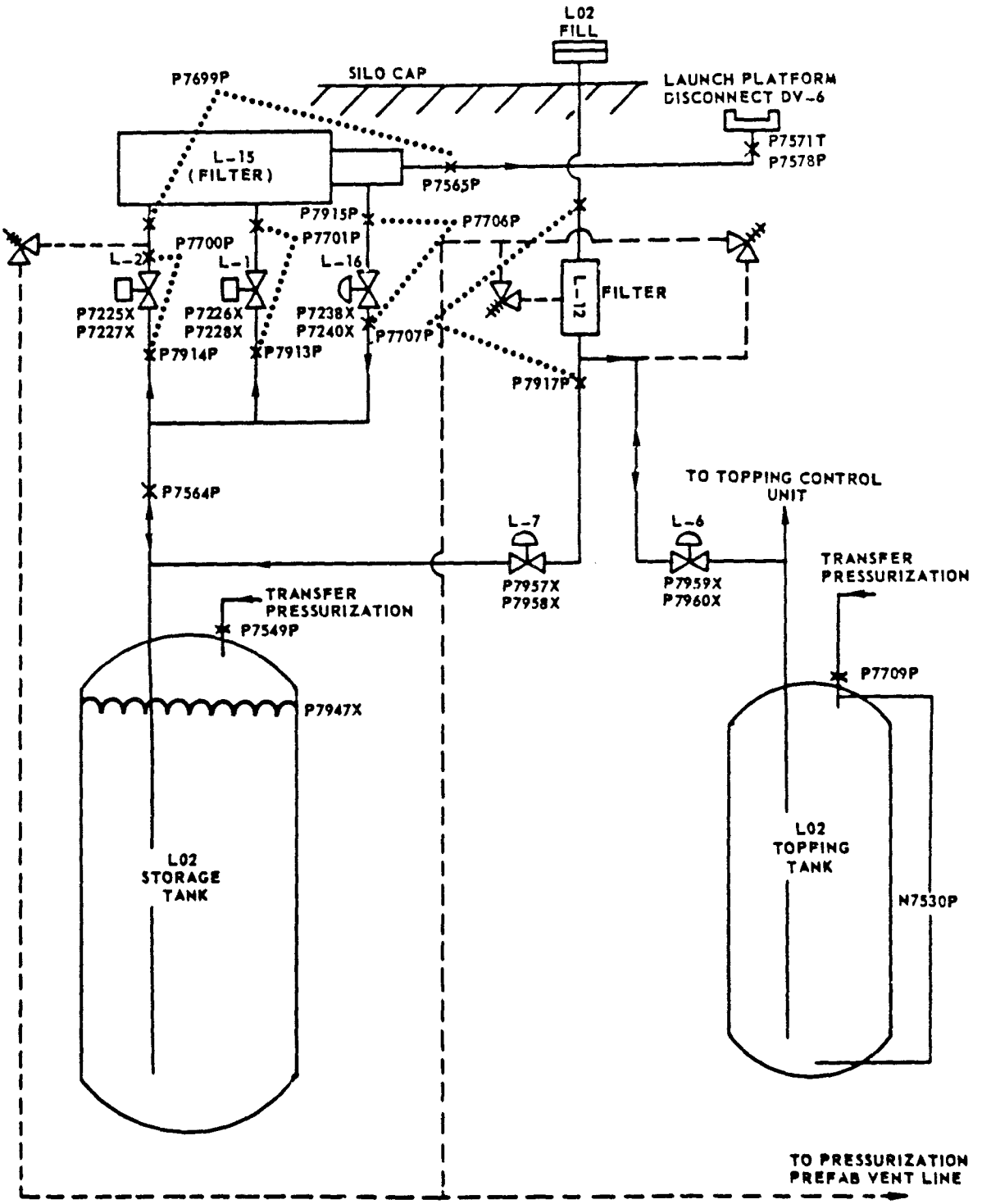

LIQUID OXYGEN SYSTEM INSTRUMENTATION CONFIGURATION

THIS MATERIAL CONTAINS INFORMATION AFFECTING THE NATIONAL DEFENSE OF THE UNITED STATES WITHIN THE MEANING OF THE ESPIONAGE LAWS, TITLE 18, U.S.C., SECTIONS 793 AND 794, THE TRANSMISSION OR REVELATION OF WHICH IN ANY MANNER TO AN UNAUTHORIZED PERSON IS PROHIBITED BY LAW.

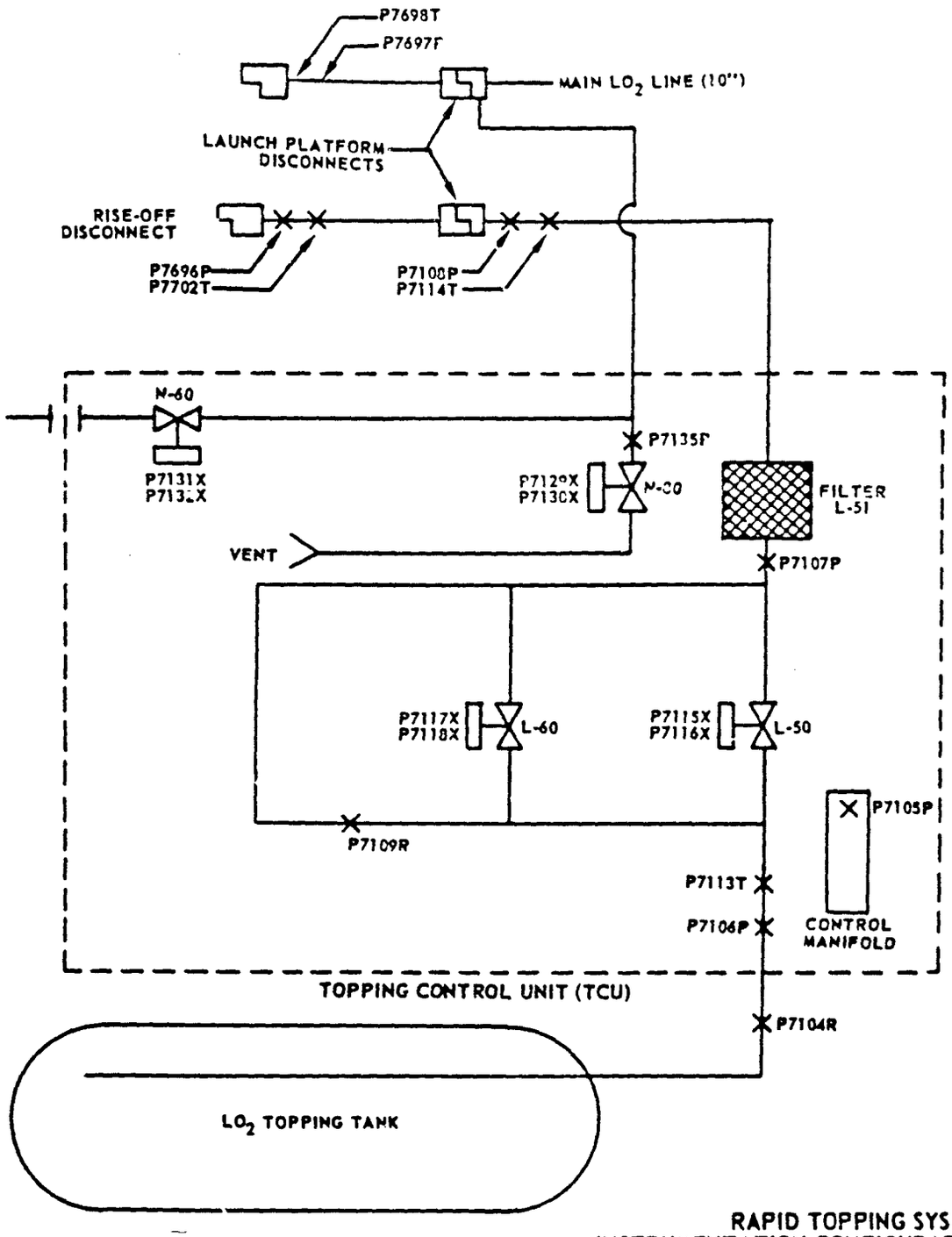

RAPID TOPPING SYSTEM
INSTRUMENTATION CONFIGURATION

THIS MATERIAL CONTAINS INFORMATION AFFECTING THE NATIONAL DEFENSE OF THE UNITED STATES WITHIN THE MEANING OF THE ESPIONAGE LAWS, TITLE 18, U.S.C., SECTIONS 793 AND 794, THE TRANSMISSION OR REVELATION OF WHICH IN ANY MANNER TO AN UNAUTHORIZED PERSON IS PROHIBITED BY LAW.

~~CONFIDENTIAL~~

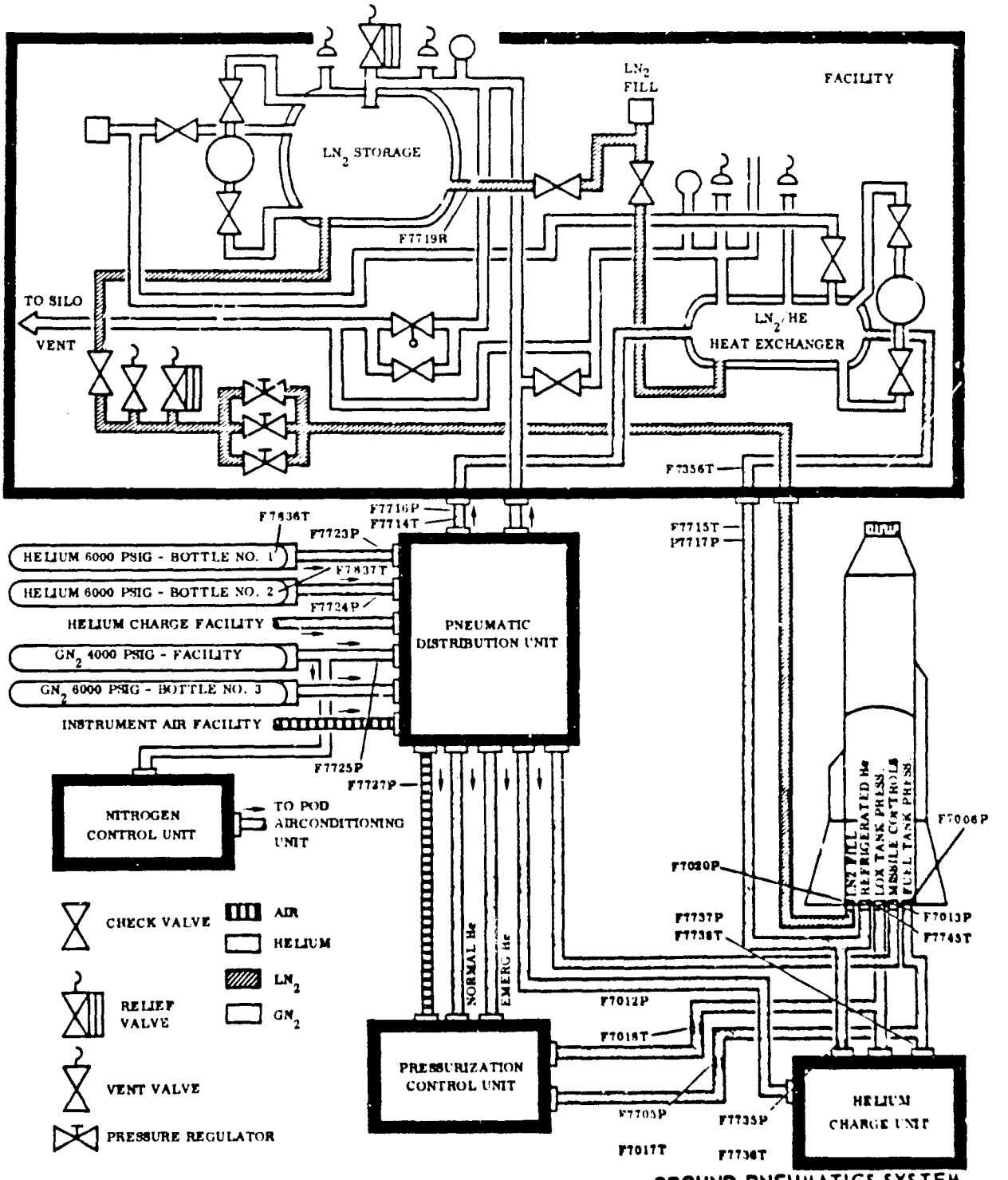

GROUND PNEUMATICS SYSTEM

THIS MATERIAL CONTAINS INFORMATION AFFECTING THE NATIONAL DEFENSE OF THE UNITED STATES WITHIN THE MEANING OF THE ESPIONAGE LAWS, TITLE 18, U.S.C., SECTIONS 793 AND 794, THE TRANSMISSION OR REVELATION OF WHICH IN ANY MANNER TO AN UNAUTHORIZED PERSON IS PROHIBITED BY LAW

~~CONFIDENTIAL~~

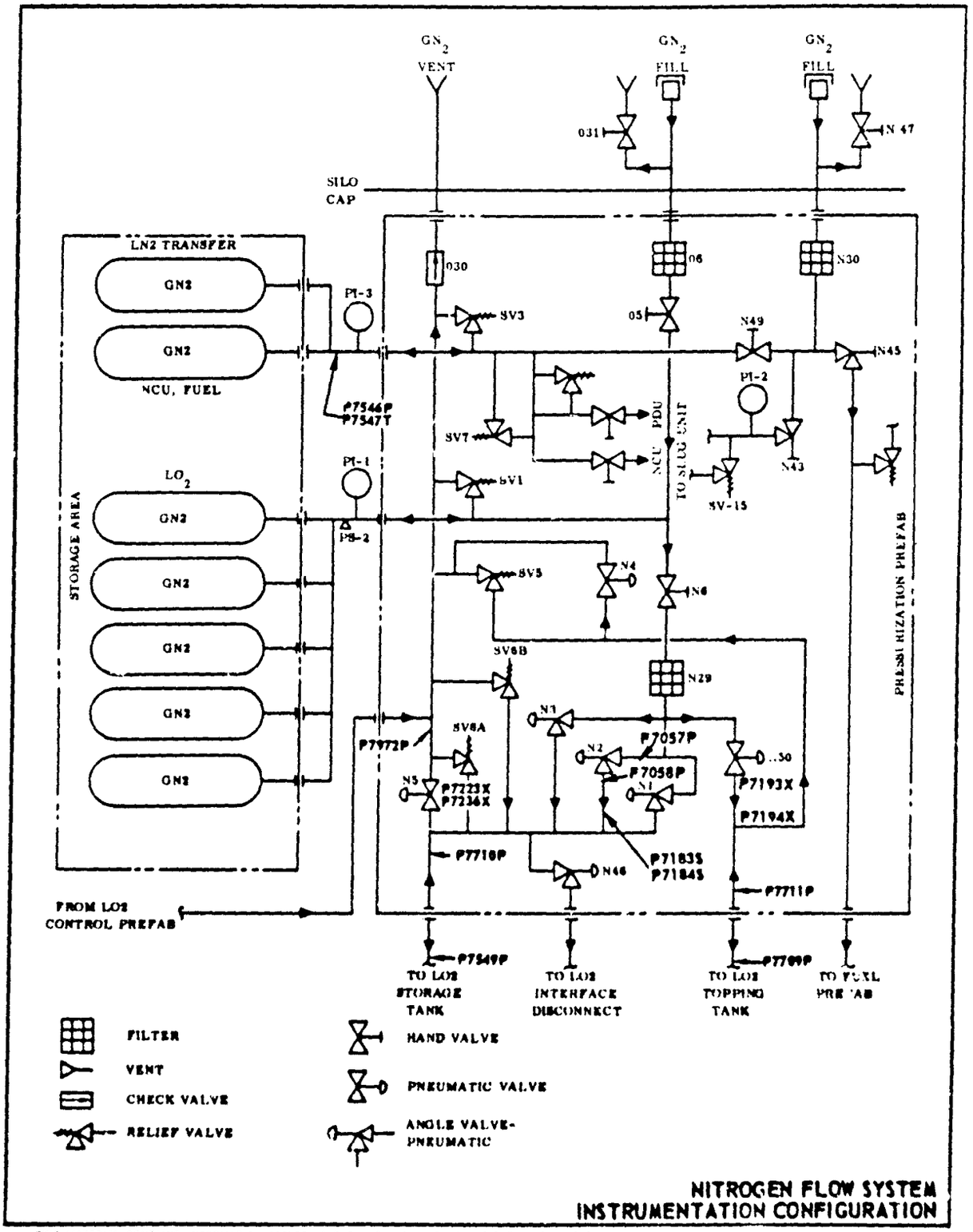

NITROGEN FLOW SYSTEM
INSTRUMENTATION CONFIGURATION

THIS MATERIAL CONTAINS INFORMATION AFFECTING THE NATIONAL DEFENSE OF THE UNITED STATES WITHIN THE MEANING OF THE ESPIONAGE LAWS, TITLE 18, U.S.C., SECTIONS 793 AND 794, THE TRANSMISSION OR REVELATION OF WHICH IN ANY MANNER TO AN UNAUTHORIZED PERSON IS PROHIBITED BY LAW

~~CONFIDENTIAL~~

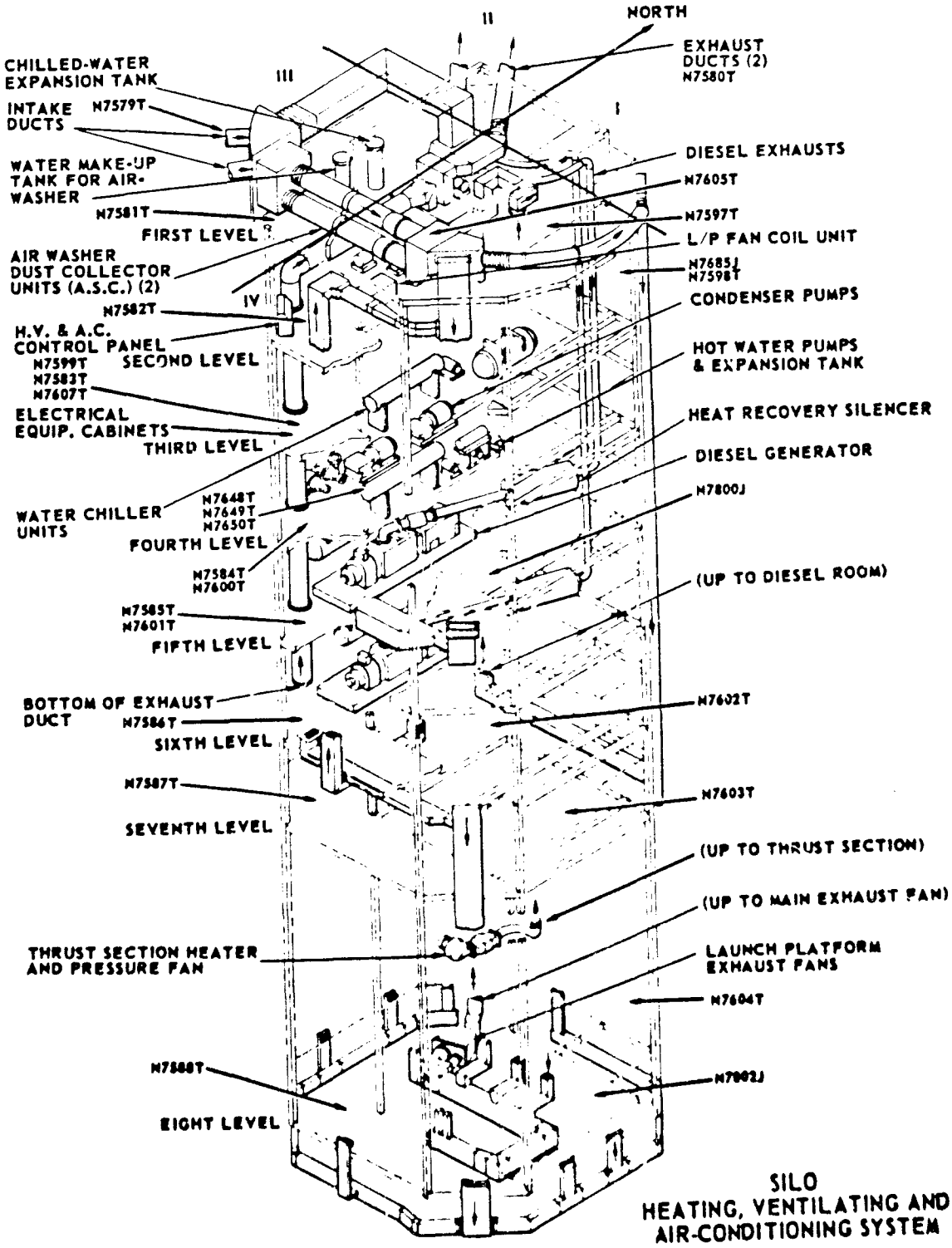

SILO
HEATING, VENTILATING AND AIR-CONDITIONING SYSTEM

THIS MATERIAL CONTAINS INFORMATION AFFECTING THE NATIONAL DEFENSE OF THE UNITED STATES WITHIN THE MEANING OF THE ESPIONAGE LAWS, TITLE 18, U.S.C., SECTIONS 793 AND 794. THE TRANSMISSION OR REVELATION OF WHICH IN ANY MANNER TO AN UNAUTHORIZED PERSON IS PROHIBITED BY LAW.

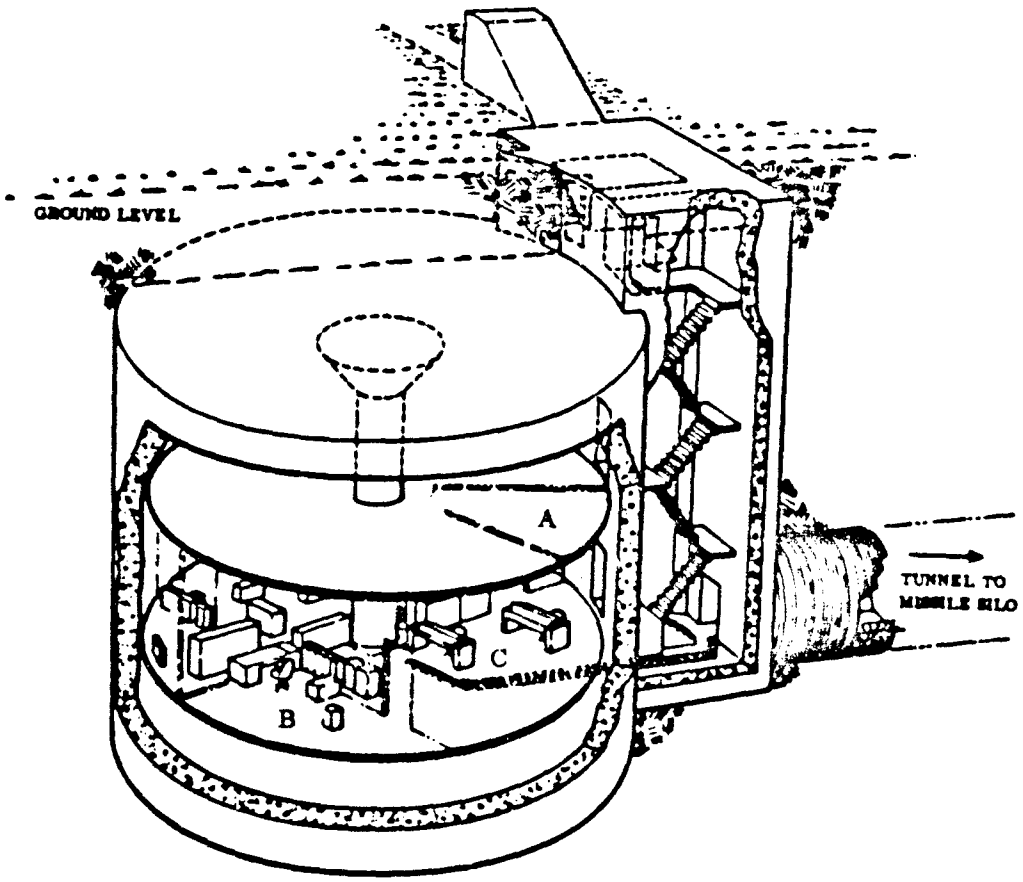

FIRST LEVEL

A. HEATING, VENTILATING AND AIR CONDITIONING ROOM. N7807T, LAUNCH CONTROL EQUIPMENT AIR RETURN.

SECOND LEVEL

B. OFFICE - N7687J, RELATIVE HUMIDITY

C. LAUNCH CONTROL ROOM - N7801J, RELATIVE HUMIDITY

LAUNCH CONTROL CENTER
HEATING, VENTILATING AND
AIR-CONDITIONING SYSTEM

THIS MATERIAL CONTAINS INFORMATION AFFECTING THE NATIONAL DEFENSE OF THE UNITED STATES WITHIN THE MEANING OF THE ESPIONAGE LAWS, TITLE 18, U.S.C., SECTIONS 793 AND 794. THE TRANSMISSION OR REVELATION OF WHICH IN ANY MANNER TO AN UNAUTHORIZED PERSON IS PROHIBITED BY LAW

~~CONFIDENTIAL~~

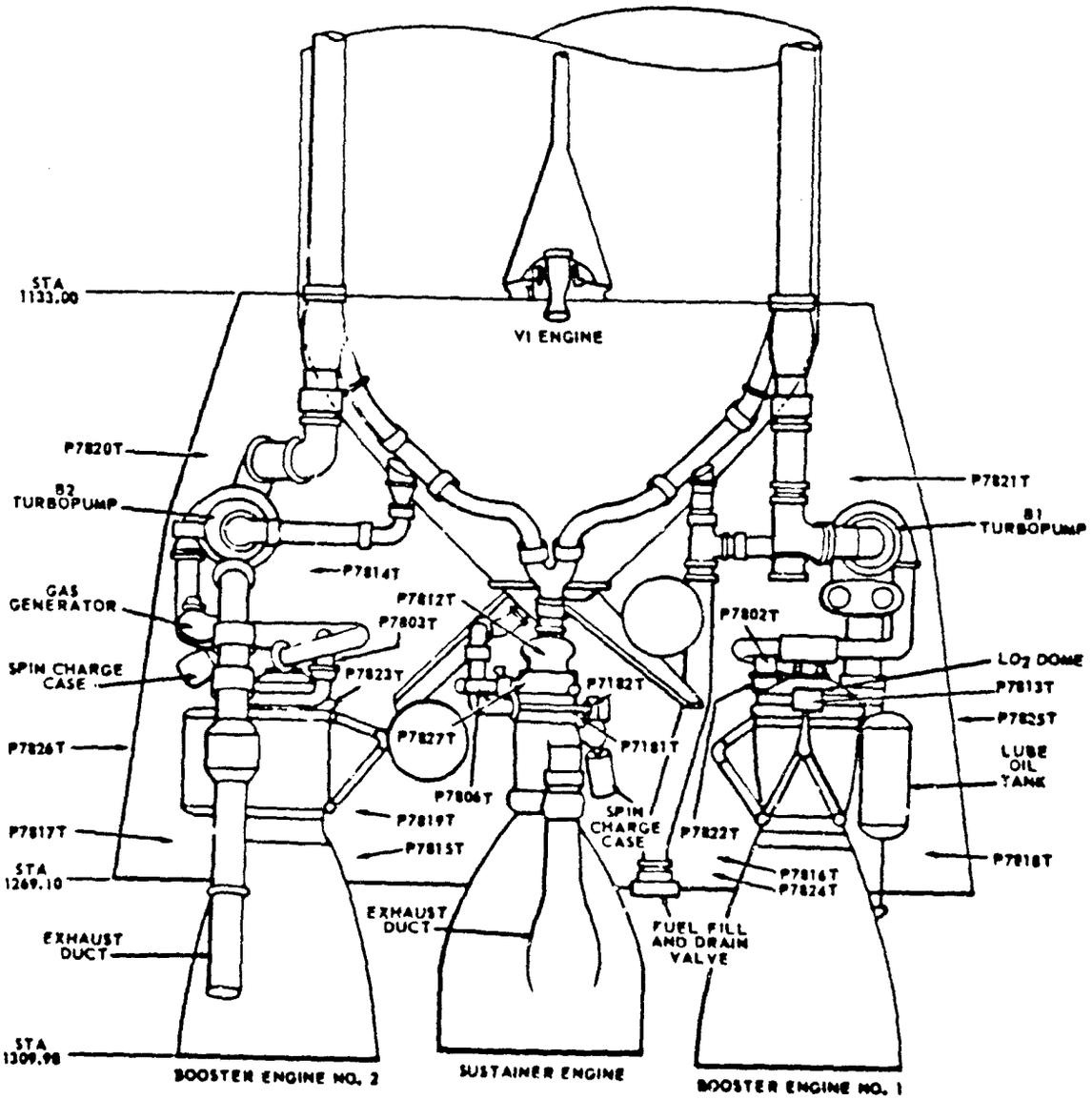

MA-3 ENGINE COMPARTMENT INSTRUMENTATION

THIS MATERIAL CONTAINS INFORMATION AFFECTING THE NATIONAL DEFENSE OF THE UNITED STATES WITHIN THE MEANING OF THE ESPIONAGE LAWS, TITLE 18, U.S.C., SECTIONS 793 AND 794. THE TRANSMISSION OR REVELATION OF WHICH IN ANY MANNER TO AN UNAUTHORIZED PERSON IS PROHIBITED BY LAW

CONFIDENTIAL

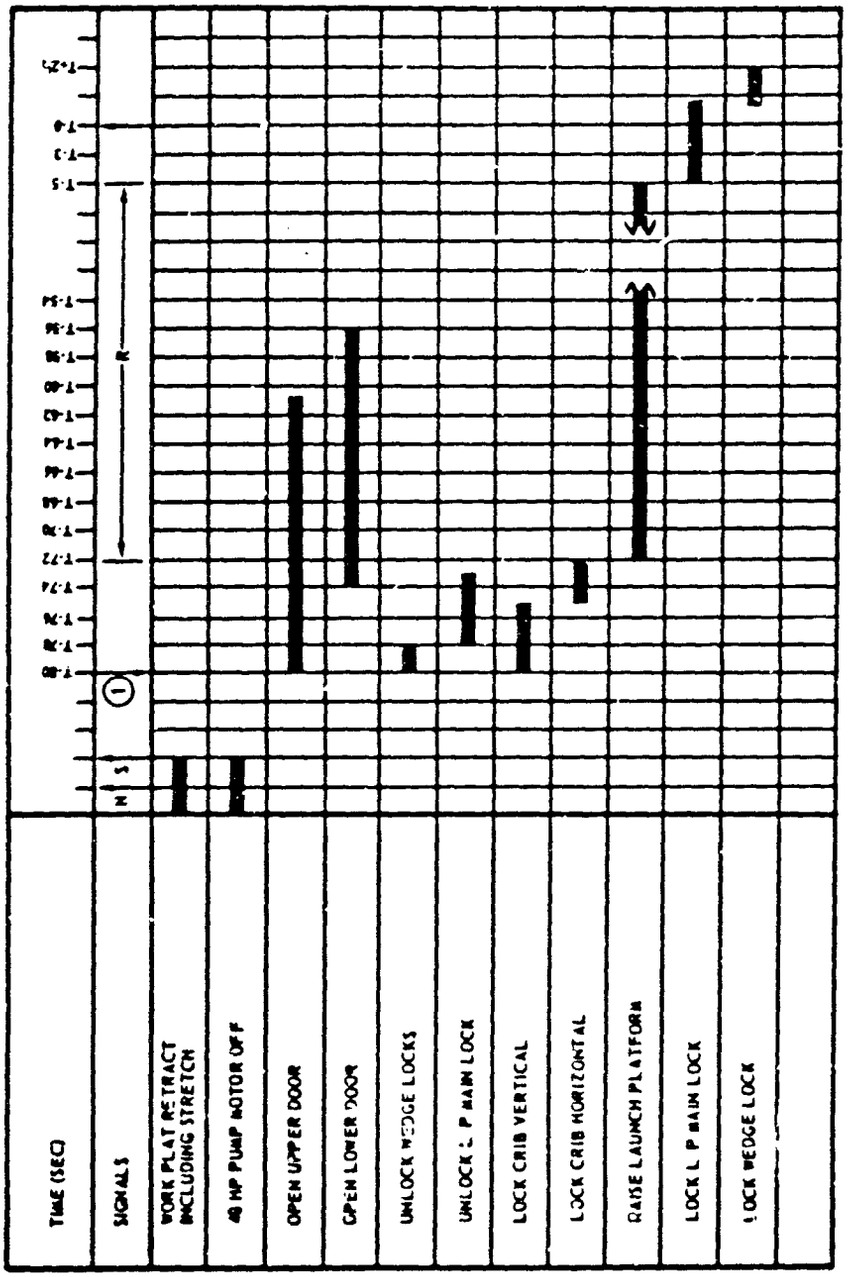

KEY:

SIGNAL TO LAUNCH CONTROL

SIGNAL FROM LAUNCH CONTROL

R PLATFORM RISE TIME
DESIGN GOAL 60 SEC.
ALLOWABLE 67 SEC.
CHART BASED ON 67 SEC.
AS DESIGN GOAL IS APPROACHED
SIGNAL NO. 1 WILL APPROACH T-77

T TIME SEQUENCE UP TO
READY TO LAUNCH

SIGNALS:
N NO GO
S STANDBY READY, CY-A START COUNTDOWN
(1) IALS COMMIT START, SOFT SITE

NOTE:
THIS SEQUENCE IS SUBJECT TO MODIFICATION DUE TO DESIGN CHANGES AND OR LAUNCH CONTROL CHANGES.

OSTF II
LAUNCH PLATFORM RISE SEQUENCE

THIS MATERIAL CONTAINS INFORMATION AFFECTING THE NATIONAL DEFENSE OF THE UNITED STATES WITHIN THE MEANING OF THE ESPIONAGE LAWS, TITLE 18, U.S.C., SECTIONS 793 AND 794, THE TRANSMISSION OR REVELATION OF WHICH IN ANY MANNER TO AN UNAUTHORIZED PERSON IS PROHIBITED BY LAW

~~CONFIDENTIAL~~

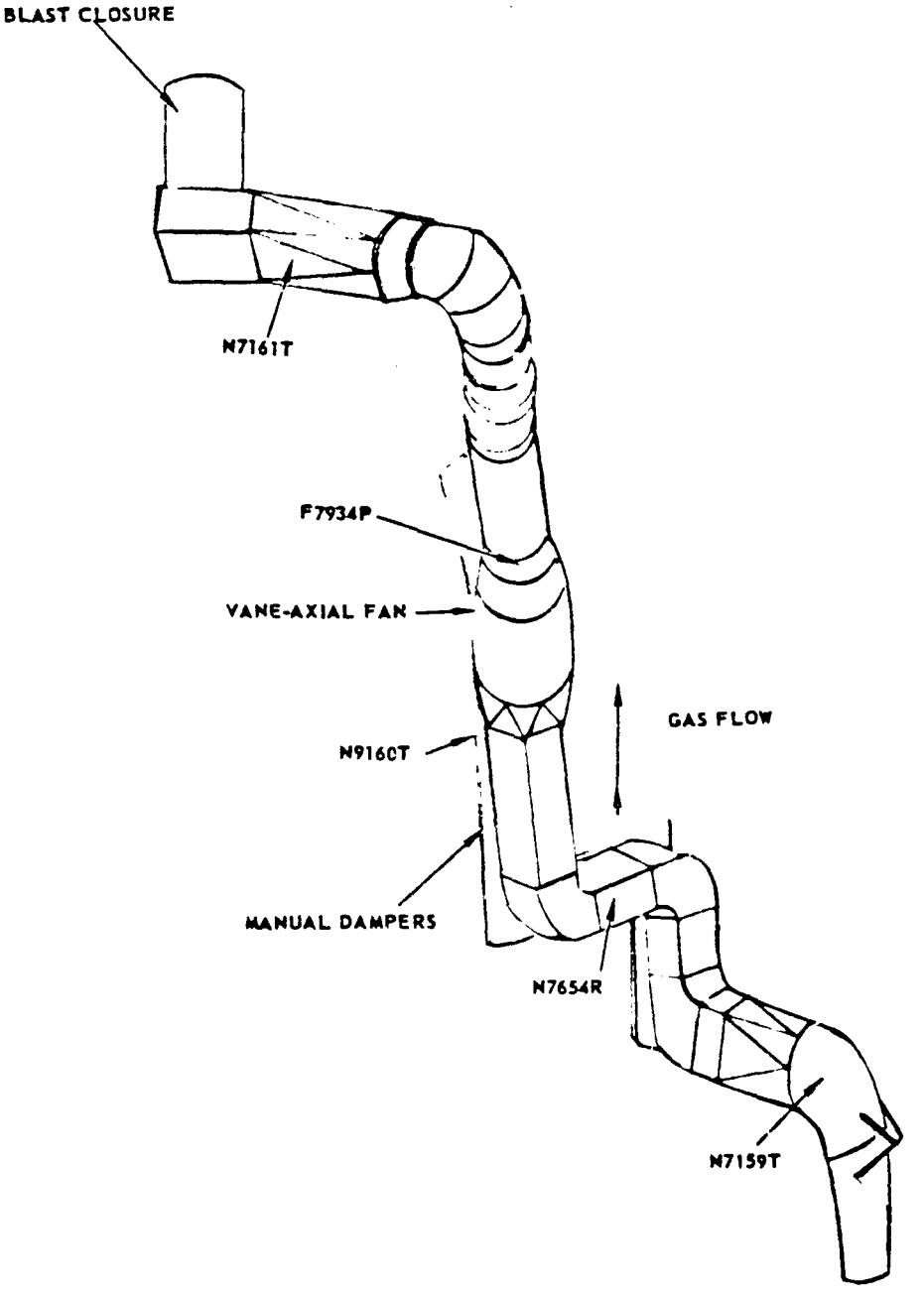

GOX VENT SYSTEM
INSTRUMENTATION

THIS MATERIAL CONTAINS INFORMATION AFFECTING THE NATIONAL DEFENSE OF THE UNITED STATES WITHIN THE MEANING OF THE ESPIONAGE LAWS, TITLE 18, U.S.C., SECTIONS 793 AND 794, THE TRANSMISSION OR REVELATION OF WHICH IN ANY MANNER TO AN UNAUTHORIZED PERSON IS PROHIBITED BY LAW.

~~CONFIDENTIAL~~

~~CONFIDENTIAL~~

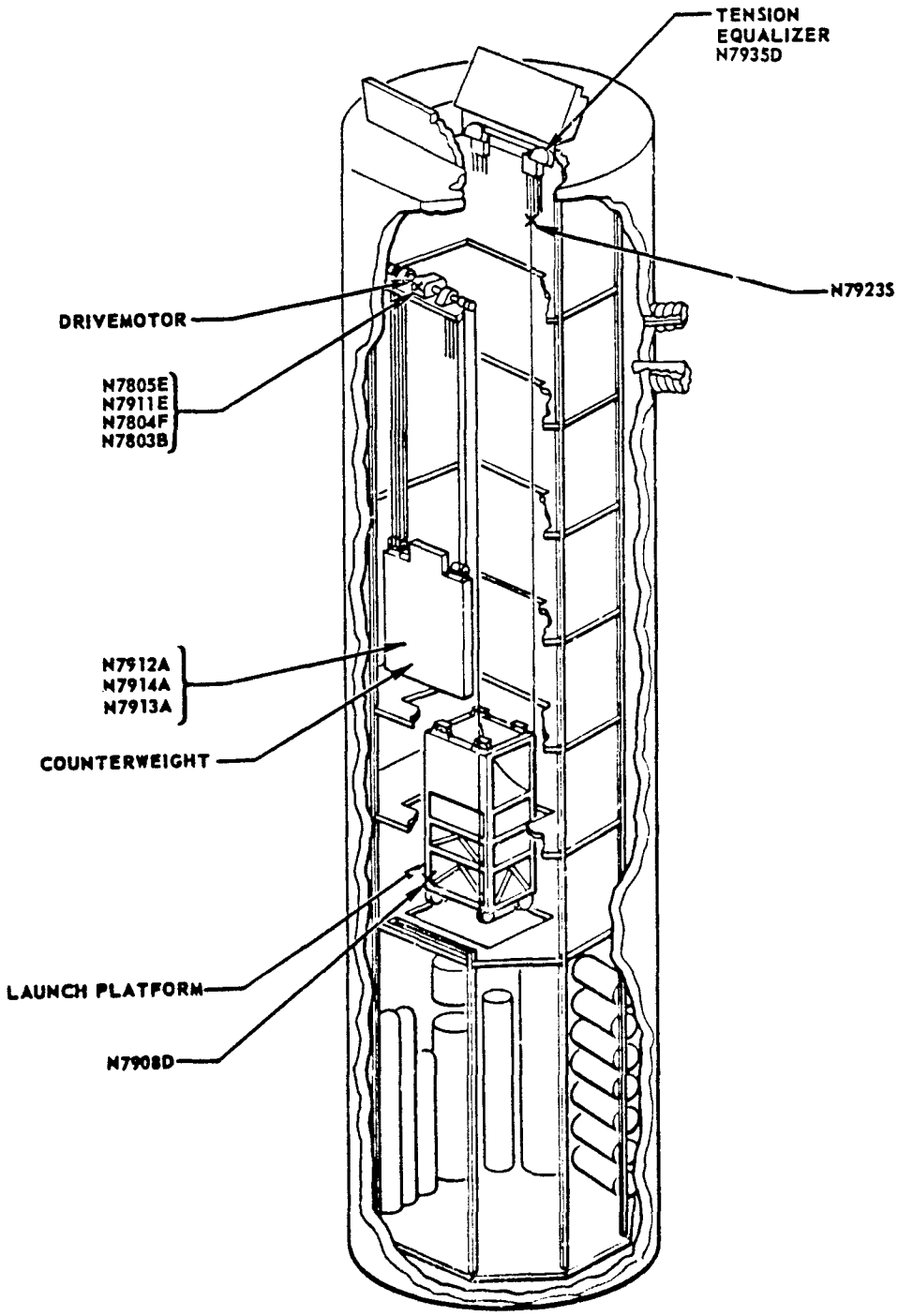

SILO MISSILE LIFT
INSTRUMENTATION CONFIGURATION

THIS MATERIAL CONTAINS INFORMATION AFFECTING THE NATIONAL DEFENSE OF THE UNITED STATES WITHIN THE MEANING OF THE ESPIONAGE LAWS, TITLE 18, U.S.C., SECTIONS 793 AND 794, THE TRANSMISSION OR REVELATION OF WHICH IN ANY MANNER TO AN UNAUTHORIZED PERSON IS PROHIBITED BY LAW.

~~CONFIDENTIAL~~

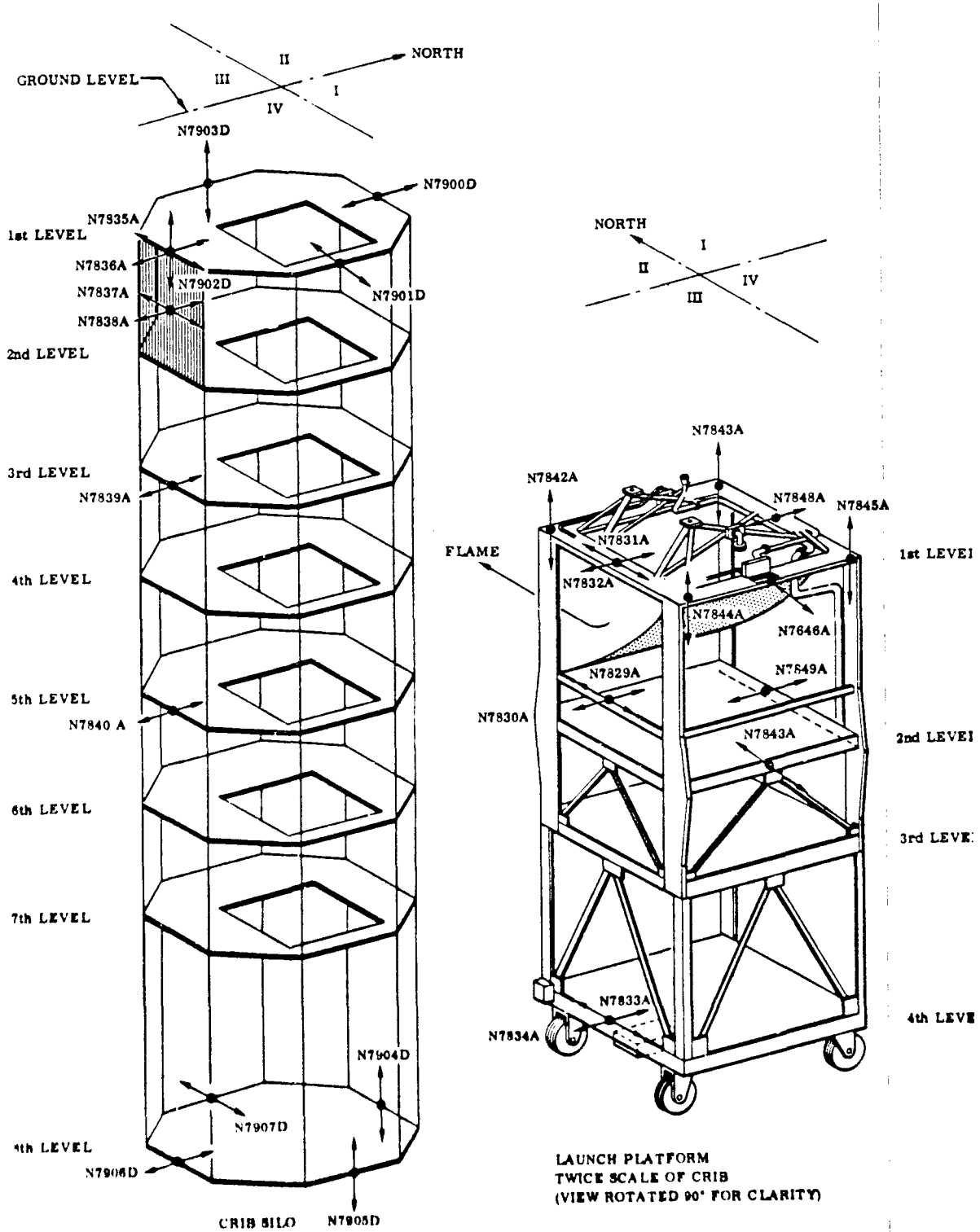

CRIB AND LAUNCH PLATFORM - ACCELERATION AND DEFLECTION INSTRUMENTAION

THIS MATERIAL CONTAINS INFORMATION AFFECTING THE NATIONAL DEFENSE OF THE UNITED STATES WITHIN THE MEANING OF THE ESPIONAGE LAWS, TITLE 18 U.S.C., SECTIONS 793 AND 794. THE TRANSMISSION OR REVELATION OF WHICH IN ANY MANNER TO AN UNAUTHORIZED PERSON IS PROHIBITED BY LAW.

~~CONFIDENTIAL~~

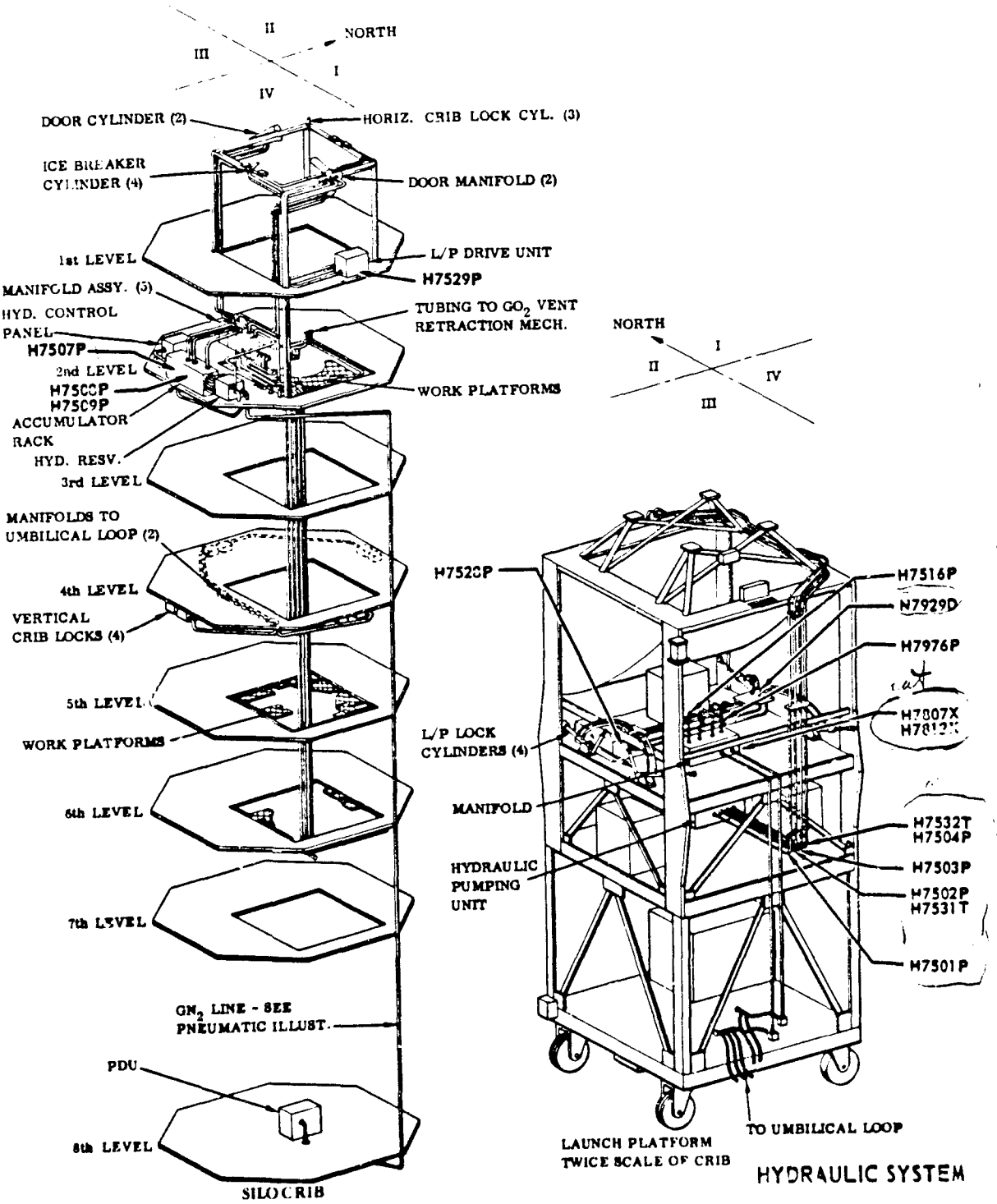

HYDRAULIC SYSTEM

THIS MATERIAL CONTAINS INFORMATION AFFECTING THE NATIONAL DEFENSE OF THE UNITED STATES WITHIN THE MEANING OF THE ESPIONAGE LAWS, TITLE 18, U.S.C., SECTIONS 793 AND 794, THE TRANSMISSION OR REVELATION OF WHICH IN ANY MANNER TO AN UNAUTHORIZED PERSON IS PROHIBITED BY LAW.

~~CONFIDENTIAL~~

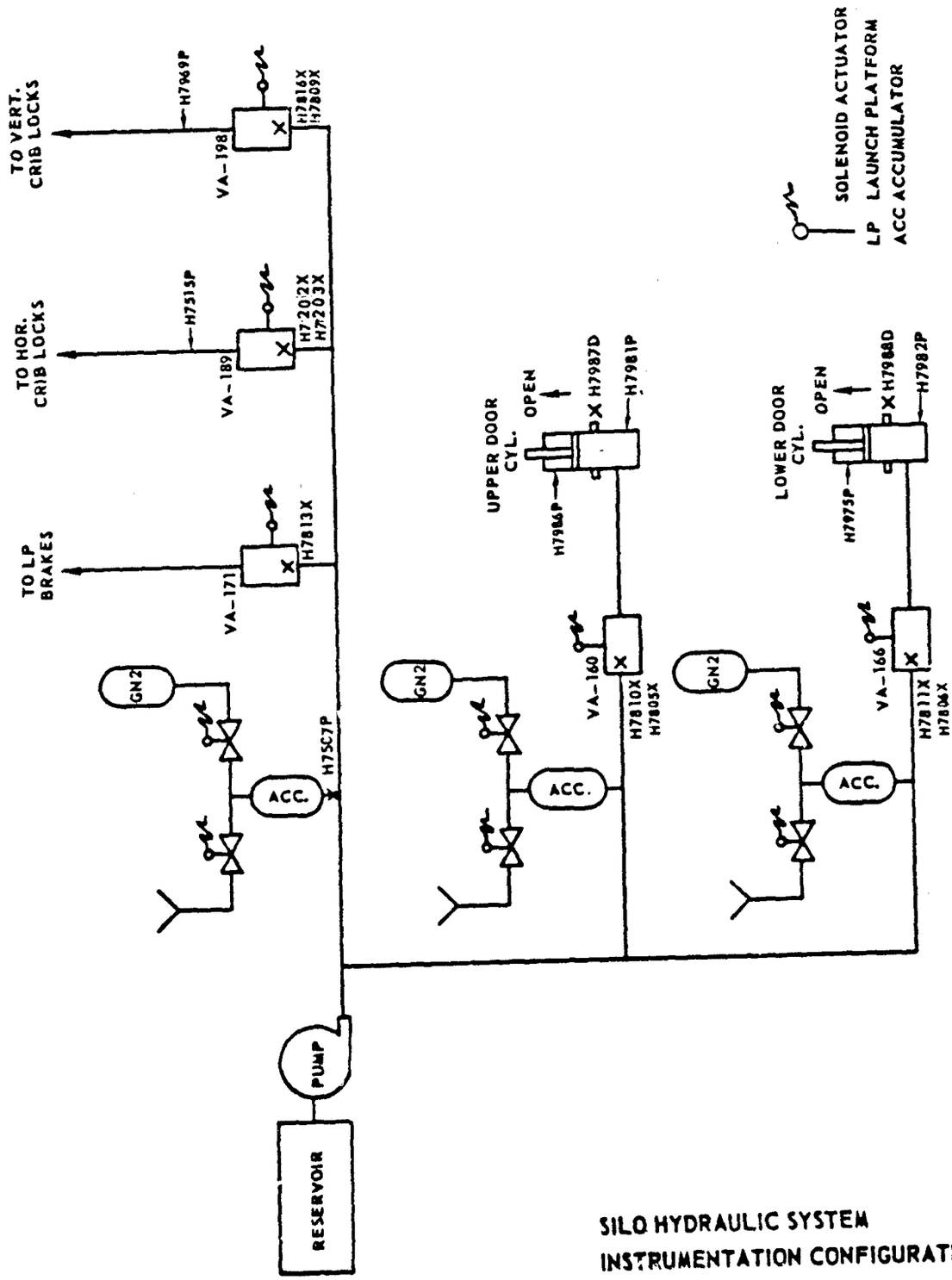

SILO HYDRAULIC SYSTEM
INSTRUMENTATION CONFIGURATION

THIS MATERIAL CONTAINS INFORMATION AFFECTING THE NATIONAL DEFENSE OF THE UNITED STATES WITHIN THE MEANING OF THE ESPIONAGE LAWS, TITLE 18, U.S.C., SECTIONS 793 AND 794, THE TRANSMISSION OR REVELATION OF WHICH IN ANY MANNER TO AN UNAUTHORIZED PERSON IS PROHIBITED BY LAW

INSTRUMENTATION BUILDING

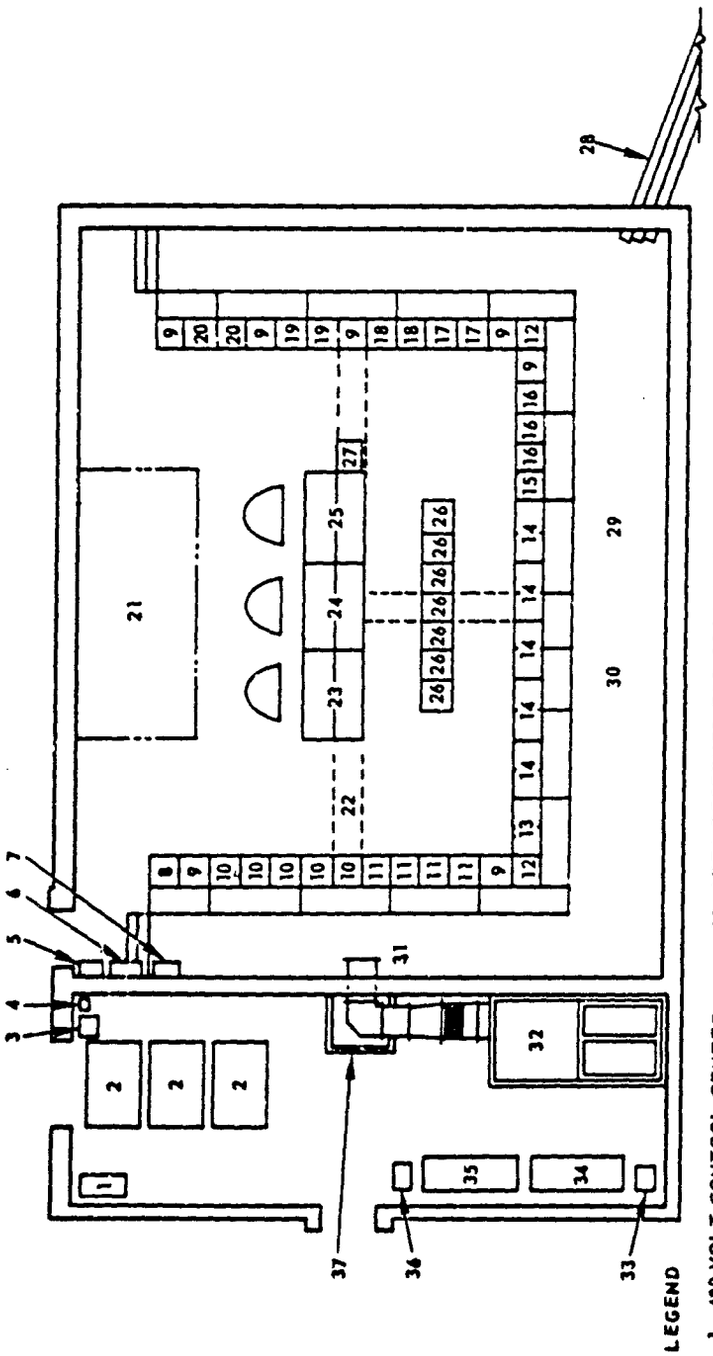

LEGEND

1 480 VOLT CONTROL CENTER
2 20 KW M.G. SETS
3 DISTRIBUTION PANEL
4 75 K.V.A. TRANSFORMER
5 LTG PANEL "F"
6 CONTROL & INSTR. PANEL "D"
7 3 PHASE PWR. DISTR. PANEL
8 OSCILLOGRAPH
9 SPARE
10 F.M. TAPE RECORDER
11 SANBORN
12 T.V. CONTROL CONSOLE
13 OUTPUT PATCH PANEL
14 BROWN STRIP CHART
15 TEST EQUIPMENT
16 CALIBRATION & NORMALIZATION
17 SEQUENCE PATCH PANEL
19 SEQUENCE RECORDER
19 DIGITAL RECORDER
20 KINE SCOPE
21 AREA RESERVED FOR OBSERVATION OF T.V., TESTING PROCEDURES, INSTR., ETC...BY HUMAN ENGINEERING, MILITARY OFFICIALS, OTHER DIGNITARIES.
22 CABLE TRAY
23 T.V. CONTROL CONSOLE
24 INSTR. CONTROL CONSOLE & TIME
25 MOTION PICTURE CONSOLE
26 OVERHEAD T.V. MONITERS
27 FLEXI WRITER
28 5-12" CONDUIT TO SILO
29 T.V. MONITOR CONTROL
30 INSTR. CONTROL
31 4500 C.F.M. BELOW FLOOR
32 AIR CONDITIONING
33 #2 PUMP MOTOR
34 #2 COND. UNIT
35 #1 COND. UNIT
36 #1 PUMP MOTOR
37 PIT

THIS MATERIAL CONTAINS INFORMATION AFFECTING THE NATIONAL DEFENSE OF THE UNITED STATES WITHIN THE MEANING OF THE ESPIONAGE LAWS, TITLE 18, U.S.C., SECTIONS 793 AND 794, THE TRANSMISSION OR REVELATION OF WHICH IN ANY MANNER TO AN UNAUTHORIZED PERSON IS PROHIBITED BY LAW

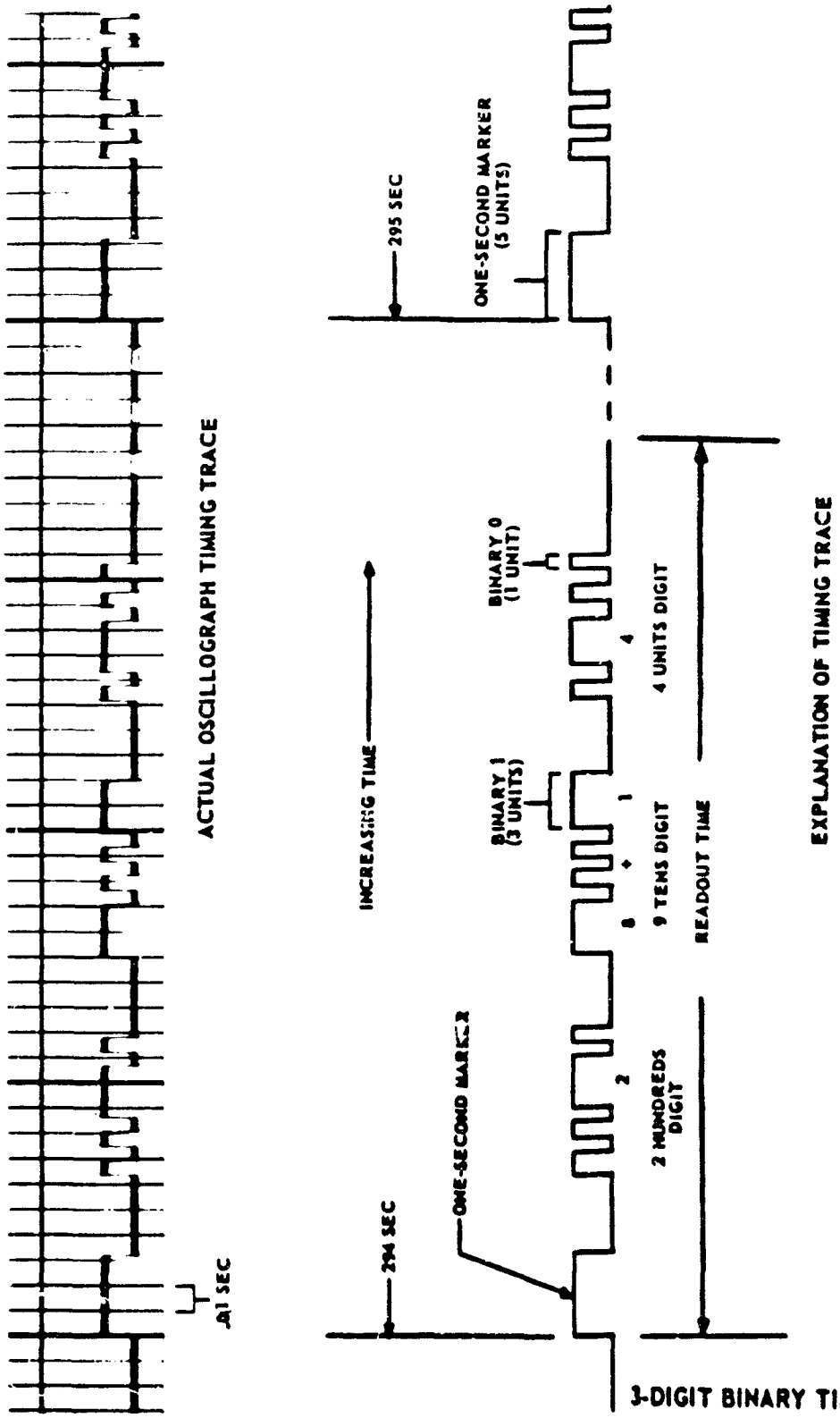

THIS MATERIAL CONTAINS INFORMATION AFFECTING THE NATIONAL DEFENSE OF THE UNITED STATES WITHIN THE MEANING OF THE ESPIONAGE LAWS, TITLE 18, U.S.C., SECTIONS 793 AND 794, THE TRANSMISSION OR REVELATION OF WHICH IN ANY MANNER TO AN UNAUTHORIZED PERSON IS PROHIBITED BY LAW

This page intentionally left blank.

THIS MATERIAL CONTAINS INFORMATION AFFECTING THE NATIONAL DEFENSE OF THE UNITED STATES WITHIN THE MEANING OF THE ESPIONAGE LAWS, TITLE 18, U.S.C., SECTIONS 793 AND 794. THE TRANSMISSION OR REVELATION OF WHICH IN ANY MANNER TO AN UNAUTHORIZED PERSON IS PROHIBITED BY LAW

~~CONFIDENTIAL~~

SECTION 8

OSTF #2 MASTER INSTRUMENTATION LOG

The OSTF #2 Master Instrumentation Log presented in this section contains the latest available characteristics of the individual measurements.

MEASUREMENT RANGE

Range of interest of the function being measured expressed in "units of function."

TRANSDUCER IDENTIFICATION

Convair part number of the transducer utilized for the measurement.

ACCURACY REQUIREMENT

Present in units of the function measured.

MEASUREMENT DESCRIPTION

This is a brief, usually abbreviated, description of the measurement.

UNITS OF FUNCTION

F 7001 P	LO_2 TANK PRESSURE	0	35	PIG	.35	20	27-01271-7
F 7003 P	FUEL TANK PRESSURE	0	75	PIG	.75	20	27-01271-9

MEASUREMENT NUMBER

FREQUENCY RESPONSE

Denotes the frequency response requirements in cps of the instrumentation system for the measurement.

NOTE: For a key to abbreviations and coding see the IBM code key of this report.

BLANK PAGE

```
OSTF-2 OBJ COMPOSITE 26 SEP 62    AE60-0653          123 123456 1234 123456 1 12345                  001

                                                                                                      9
                                                          LL    L                L LL                  2
                                                          NO    N                N NN                  2
                                                          22    2                2 22                  2
                                                    LLL  LCCLL  CL   L5LL       C5CC                  2
                                                    NNN INDDOO IDOL IN NOL I ID DD                    2
                                                    222 N2&&22 N&2N N2D22N N N&D&&                    2
                                                    CCC SCHHCC SHCC SCACCC S SHAHH                    2
                                                    DDD PDHHDD PHDH PDYDDH P PHYHH                    2
                                                    123                                               2
                TEST SERIES 1 BLOCK 0 /3F/                 123456                                     2
                              BLOCK 1 /13F/                      1234                                 2
                    OPERATION BLOCK 1A /57F/                              123456                      2
                     SHOTGUN  BLOCK 1B /13F/                                     1                     2
                              BLOCK 1C /576E/                                          12345            2
                TEST SERIES 2 BLOCK 1 /83F/                                                            2
                              BLOCK 2 /83F/                                                            2
                TEST SERIES 3 BLOCK 1 /3F/                                                             2
                              BLOCK 2

                NOTE. /1/  THE SEQUENCE OF NUMBERS APPEARING
                           AT THE TOP OF EACH PAGE CORRESPONDS
                           TO THE NUMBERED EVENTS SHOWN IN
                           THE ABOVE TABLE.

                      /2/  SEE PAGE 145 OF THIS REPORT FOR
                           DEFINITION OF TEST OBJECTIVE PRIORITIES.

                      /3/  MEASUREMENTS HAVING PRIORITY 1 ARE
                           THE MINIMUM REQUIRED TO SATISFY THE
                           OBJECTIVE. MEASUREMENTS HAVING
                           PRIORITY 2 ARE DESIRED TO SATISFY
                           THE TEST OBJECTIVE.

                      /4/  CERTAIN MEASUREMENTS ARE SHOWN

                           EFFECTIVE FOR TEST EVENTS ALTHOUGH
                           THE OBJECTIVE THEY APPEAR UNDER
                           IS NOT EFFECTIVE. THESE OPERATIONAL
                           MEASUREMENTS WILL BE RECORDED AS
                           PRIORITY 1 MEASUREMENTS DURING
                           EACH TEST EVENT THEY ARE SHOWN
                           EFFECTIVE FOR, AND ARE NOT REQUIRED
                           FOR SATISFACTION OF THE TEST
                           OBJECTIVE.

                      /5/  BLOCK 1C TEST SERIES 1 /P-4 INSP/ WILL BE
                           PERFORMED AT 576E SITE.

                      /6/  THE REMAINDER OF THE CAT II TEST PROGRAM
                           WILL BE INCLUDED IN A LATER REVISION.


000  001-01-  FACILITY AGE COMPATIBILITY          222 222222 2222 222222 2 22222                  2

000  001-02-  THR SECT HEATER ADEQ                  2                                                2
-015        -  H7181T  HYD FLUID SUS PITCH ACTR     1                                                5
-020        -  H7182T  HYD FLUID SUS YAW ACTR       1                                                5
-025        -  H7531T  BOOSTER SYSTEM OIL           1                                                5
-030        -  H7532T  SUS SYSTEM OIL               1                                                5
-035        -  P7802T  SKIN B1 HYPERGOL CTL         2                                                5
```

OSTF-2 OBJ COMPOSITE 26 SEP 62		AE60-0653	123	123456	1234	123456	1	12345		002
-040	-	P7803T SKIN B2 HYPERGOL CTL	2							5
-045	-	P7806T SKIN SUS HYPERGOL CTL	2							5
-050	-	P7812T AMB SUS HYD CTL MAN	2							5
-055	-	P7813T AMB QUAD 4 STA 1205	1							5
-060	-	P7814T AMB QUAD 3 STA 1175	1							5
-065	-	P7815T AMB QUAD 2 STA 1245	1							5
-070	-	P7816T AMB QUAD 1 STA 1248	1							5
-075	-	P7817T AMB B1 NAC STA 1245	1							5
-080	-	P7818T AMB B2 NAC STA 1245	1							5
-085	-	P7819T AMB QUAD 2 STA 1234	1							5
-090	-	P7820T AMB B2 NAC STA 1156	1							5
-095	-	P7821T AMB B1 NAC STA 1156	1							5
-100	-	P7822T AMB B1 FUEL CTL VLV	1							5
-105	-	P7823T AMB B2 FUEL CTL VLV	1							5
-110	-	P7824T AMB QUAD 4 STA 1260	1							5
-115	-	P7825T SKIN B1 NAC STA 1220	1							5
-120	-	P7826T SKIN B2 NAC STA 1220	1							5
-125	-	P7827T SKIN X AXIS STA 1200	1							5
000	001-03-	FAC GOX VENT SYSTEM	2							2
-010	-	F7001P LOX TANK PRESSURE	1							5
-015	-	N7654R GOX VENT GAS FLOWRATE	1							5
-020	-	N7159T VENT GOX TEMP @ ELBOW	1							5
-025	-	N7160T VENT GOX TEMP @ FAN INL	1							5
-030	-	N7161T VENT GOX TEMP @ GATE INL	1							5
-035	-	P7549P LOX STOR TK ULLAGE PRESS	1							5
000	001-04-	FAC ITEMS ADEQUACY	222	222222	2222	222222		22222		2
000	001-05-	FAC AIR CONDITIONING			1	111				2
-015	-	N7685J SILO UPPER RH HUM			1	111				5
-020	-	N7687J IGLOO RH HUM								5
-025	-	N7800J MSL COMPT RH HUM			1	111				5
-030	-	N7801J L/C EQUIP RH HUM								5
-035	-	N7802J SILO LOWER RH HUM			1	111				5
-040	-	N7655R XHST FAN 40+41 XHST FL/RT								5
-045	-	N7656R XHST FAN 30 XHST FL/RT								5

OSTF-2 OBJ COMPOSITE 26 SEP 62 AE60-0653 123 123456 1234 123456 1 12345 003

-050	-	N7579T	AIR DUCT INLET TEMP	1	111	5
-055	-	N7580T	AIR DUCT OUTLET TEMP	1	111	5
-060	-	N7581T	SILO QUAD 2 LVL 1 TEMP		111	5
-065	-	N7582T	SILO QUAD 2 LVL 2 TEMP	1	111	5
-070	-	N7583T	SILO QUAD 2 LVL 3 TEMP		111	5
-075	-	N7584T	SILO QUAD 2 LVL 4 TEMP	1	111	5
-080	-	N7585T	SILO QUAD 2 LVL 5 TEMP		111	5
-085	-	N7586T	SILO QUAD 2 LVL 6 TEMP		111	5
-090	-	N7587T	SILO QUAD 2 LVL 7 TEMP		111	5
-095	-	N7588T	SILO QUAD 2 LVL 8 TEMP	1	111	5
-100	-	N7589T	HT RECOVERY H20 IN TEMP	1	111	5
-105	-	N7590T	ELEC BOILER H20 OUT TEMP	1	111	5
-110	-	N7597T	MSL COMPT LVL 1 TEMP	1	111	5
-115	-	N7598T	MSL COMPT LVL 2 TEMP	1	111	5
-120	-	N7599T	MSL COMPT LVL 3 TEMP	1	111	5
-125	-	N7600T	MSL COMPT LVL 4 TEMP	1	111	5
-130	-	N7601T	MSL COMPT LVL 5 TEMP	1	111	5
-135	-	N7602T	MSL COMPT LVL 6 TEMP	1	111	5
-140	-	N7603T	MSL COMPT LVL 7 TEMP	1	111	5
-145	-	N7604T	MSL COMPT LVL 8 TEMP	1	111	5
-150	-	N7605T	DUST SEP AIR OUT TEMP		111	5
-155	-	N7606T	COOLING TWR H20 IN TEMP			5
-160	-	N7607T	MSL COMPT AIR SUPPLY TEMP	1	111	5
-165	-	N7620T	H20 HT RECLAIMER TEMP	1	111	5
-170	-	N7621T	ELCT EQUIP AIR IN 1 TEMP		111	5
-175	-	N7622T	ELCT EQUIP AIR IN 2 TEMP		111	5
-180	-	N7623T	ELCT EQUIP AIR IN 3 TEMP		111	5
-185	-	N7624T	ELCT EQUIP AIR IN 4 TEMP		111	5
-190	-	N7625T	ELCT EQUIP AIR IN 5 TEMP		111	5
-195	-	N7626T	ELCT EQUIP AIR OUT 1 TEMP		111	5
-200	-	N7627T	ELCT EQUIP AIR OUT 2 TEMP		111	5
-205	-	N7628T	ELCT EQUIP AIR OUT 3 TEMP		111	5
-210	-	N7629T	ELCT EQUIP AIR OUT 4 TEMP		111	5
-215	-	N7630T	ELCT EQUIP AIR OUT 5 TEMP		111	5
-220	-	N7641T	POD AIR COND H20 IN TEMP	1	111	5
-225	-	N7642T	POD AIR COND H20 OUT TEMP	1	111	5

OSTF-2 OBJ COMPOSITE 26 SEP 62 AE60-0653 123 123456 1234 123456 1 12345 004

-230	-	N7643T	COOL COIL 10 H20 OUT TEMP					5
-235	-	N7644T	COOL COIL 40 H20 OUT TEMP	1	111			5
-240	-	N7645T	COOL COIL 41 H20 OUT TEMP	1				5
-245	-	N7646T	HEAT COIL 40 H20 IN TEMP	1	111			5
-250	-	N7647T	HEAT COIL 40 H20 OUT TEMP	1	111			5
-255	-	N7649T	WCU 50 H20 OUT TEMP	1	111			5
-260	-	N7650T	WCU 50,51 H20 IN TEMP	1	111			5
-265	-	N7651T	LCC COLD H20 OUT TEMP					5
-270	-	N7746T	COOLING TWR H20 OUT TEMP					5
-275	-	N7807T	L/C EQUIP AIR RETURN TEMP					5
000	001-06-		L/P DRIVE SYSTEM					2
-015	-	N7842A	SILO L/P ACCELN Z1					5
-020	-	N7843A	SILO L/P ACCELN Z2					5
-025	-	N7844A	SILO L/P ACCELN Z3					5
-030	-	N7845A	SILO L/P ACCELN Z4					5
-033	-	N7846A	SILO L/P ACCELN X1					5
-040	-	N7847A	SILO L/P ACCELN X2					5
-045	-	N7848A	SILO L/P ACCELN X3					5
-050	-	N7849A	SILO L/P ACCELN X4					5
-060	-	N7803B	L/P DRIVE MOTOR SPEED	111	1 111	1 11		5
-065	-	N7908D	L/P DISPLACEMENT	111	1 111	1 11		5
-070	-	N7804F	DRIVE MOTOR TORQUE	111	1 111	1 11		5
-075	-	N7980L	7 IN. MOTION UP FAST					5
-080	-	N7981L	7 IN. MOTION UP SLOW					5
-085	-	N7982L	7 IN. MOTION DOWN SLOW					5
-090	-	N7962S	LOAD CELL QUAD 1 L/P					5
-095	-	N7963S	LOAD CELL QUAD 2 L/P					5
-100	-	N7964S	LOAD CELL QUAD 3 L/P					5
-105	-	N7965S	LOAD CELL QUAD 4 L/P					5
-110	-	N7500X	ZONE CHECK LS CLSD	111	1 111	1 11		5
-115	-	N7501X	1000 IN. LS CLSD	111	1 111	1 11		5
-120	-	N7502X	HI SPEED DECELN SW CLSD	111	1 111	1 11		5
-125	-	N7503X	UPR OVERSPEED ZONE LS CLSD	111	1 111	1 11		5
-130	-	N7504X	OVERSPEED SENSOR ENERGIZED	111	1 111	1 11		5
-135	-	N7513X	MSL LIFT DOWN & LOCKED	111	1 111	1 11		5

```
OSTF-2 OBJ COMPOSITE 26 SEP 62    AE60-0653        123 123456 1234 123456 1 12345                 005

-140        -  N7528X  MSL LIFT UP & LOCKED                   111  1 111    1 11                   5

 000  001-07-  DOOR CLOSURE SYS                    22              1 111                           2
-010        -  H7987D  UPPER DOOR POSITION                        1 111                           5
-015        -  H7988D  LOWER DOOR POSITION                        1 111                           5
-020        -  H7508P  UPR DOOR HYD ACUM PRESS                111  1 111                           5
-025        -  H7509P  LWR DOOR HYD ACUM PRESS                111  1 111                           5
-030        -  H7975P  LWR DOOR CYL ROD PRESS                     1 111                           5
-035        -  H7981P  UPR DOOR CYL HD PRESS                      1 111                           5
-040        -  H7982P  LWR DOOR CYL HD PRESS                      1 111                           5
-045        -  H7986P  UPR DOOR CYL ROD PRESS                     1 111                           5
-050        -  H7805X  UPR DR CTL VLV OPEN          11        111  1 111    1 11                   5
-055        -  H7806X  LWR DR CTL VLV OPEN          11        111  1 111    1 11                   5
-060        -  H7810X  UPR DR CTL VLV CLSD          11        111  1 111    1 11                   5
-065        -  H7811X  LWR DR CTL VLV CLSD          11        111  1 111    1 11                   5
-070        -  N7046X  DOORS OPEN                             111  1 111    1 11                   5
-075        -  N7047X  DOORS CLOSED                           111  1 111    1 11                   5

 000  001-08-  CRIB LOCK SYS                       22              1 111                           2
-010        -  H7507P  SYS HYD ACUM PRESS                     111  1 111    1 11                   5
-015        -  H7515P  HORIZ CRIB LK HD PRESS                     1 111                           5
-020        -  H7969P  VERT CRIB LKS PRESS                        1 111                           5
-025        -  H7190X  HORIZ CRIB LKS RETR          11        111  1 111    1 11                   5
-030        -  H7191X  HORIZ CRIB LKS EXT           11        111  1 111    1 11                   5
-035        -  H7192X  VERT CRIB LKS EXT            11        111  1 111    1 11                   5
-040        -  H7193X  VERT CRIB LKS RETR           11        111  1 111    1 11                   5
-045        -  H7202X  HORIZ LKS CTL VLV CLSD       11        111  1 111    1 11                   5
-050        -  H7203X  HORIZ LKS CTL VLV OPEN       11        111  1 111    1 11                   5
-055        -  H7809X  VERT LKS CTL VLV OPEN        11        111  1 111    1 11                   5
-060        -  H7816X  VERT LKS CTL VLV CLSD        11        111  1 111    1 11                   5

 000  001-09-  COMPAT OF LIFT SYS WITH MSL                                                          2
-015        -  A7541A  ACCELN MSL X AXIS                                                           5
-020        -  A7542A  ACCELN MSL Y AXIS                                                           5
-025        -  A7828D  MSL NOSE X AXIS DISPL                                                       5
-030        -  A7829D  MSL NOSE Y AXIS DISPL                                                       5
```

```
OSTF-2 OBJ COMPOSITE 26 SEP 62    AE60-0653          123 123456 1234 123456 1 12345                 006

-035        -  H7507P  SYS HYD ACUM PRESS                         111  1 111    1 11                  5
-040        -  H7516P  L/P LOCK-LOCKING PRESS                                                         5
-045        -  H7527P  WEDGE LKS CYL ROD PRESS                                                        5
-050        -  H7528P  WEDGE LKS CYL HD PRESS                                                         5
-055        -  H7976P  L/P LOCK-UNLOCKING PRESS                                                       5
-060        -  H7194X  L/P WEDGE LKS PRESS                                                            5
-065        -  H7195X  L/P WEDGE LKS RETR                                                             5
-070        -  H7196X  L/P MAIN LKS PRESS                                                             5
-075        -  H7197X  L/P MAIN LKS RETR                                                              5
-080        -  H7198X  WEDGE LKS CTL VLV CLSD                                                         5
-085        -  H7199X  WEDGE LKS CTL VLV OPEN                                                         5
-090        -  H7200X  MAIN LKS CTL VLV CLSD                                                          5
-095        -  H7201X  MAIN LKS CTL VLV OPEN                                                          5
-100        -  H7807X  L/P LK ASSY /RETRACT/ OPEN                                                     5
-105        -  H7812X  L/P LK ASSY /EXTEND/ CLSD                                                      5

 000  001-10-  L/P LOCKING SYS                      22                1 111                           2
-025        -  H7516P  L/P LOCK-LOCKING PRESSURE                      1 111                           5
-030        -  H7527P  WEDGE LKS CYL ROD PRESS                        1 111                           5
-035        -  H7528P  WEDGE LKS CYL HD PRESS                         1 111                           5
-040        -  H7529P  L/P BRAKE PRESS                            111  1 111    1 11                  5
-045        -  H7976P  L/P LOCK-UNLOCKING PRESS                       1 111                           5
-050        -  H7194X  L/P WEDGE LKS PRESS          11            111  1 111    1 11                  5
-055        -  H7195X  L/P WEDGE LKS RETR           11            111  1 111    1 11                  5
-060        -  H7196X  L/P MAIN LKS PRESS           11            111  1 111    1 11                  5
-065        -  H7197X  L/P MAIN LKS RETR            11            111  1 111    1 11                  5
-070        -  H7198X  WEDGE LKS CTL VLV CLSD       11            111  1 111    1 11                  5
-075        -  H7199X  WEDGE LKS CTL VLV OPEN       11            111  1 111    1 11                  5
-080        -  H7200X  MAIN LKS CTL VLV CLSD        11            111  1 111    1 11                  5
-085        -  H7201X  MAIN LKS CTL VLV OPEN        11            111  1 111    1 11                  5
-086        -  H7807X  L/P LK ASSY /RETRACT/ OPEN   11            111  1 111    1 11                  5
-089        -  H7812X  L/P LK ASSY /EXTEND/ CLSD    11            111  1 111    1 11                  5
-090        -  H7813X  SOL 1 L/P BK CTL VLV         11                                                5
-095        -  H7972X  PRESS SWITCH RETURN          11            111  1 111    1 11                  5

 000  001-11-  IGS SILO COMPATIBILITY                      2     2                                    2
```

```
OSTF-2 OBJ COMPOSITE 26 SEP 62    AE60-0653        123 123456 1234 123456 1 12345                  007

 000  001-12-  PROP HANDLING SYSTEM                                                                  2
-040        -  P7546P  GN2 STOR TK DISCH PRESS                                                       5
-045        -  P7547T  GN2 STOR TK DISCH TEMP                                                        5

 000  001-13-  FACILITY SUPPLY POWER                                                                  2

 000  001-14-  28 VDC POWER                                                                           2
-035        -  E7003V  28 VDC GND VOLTAGE                                                            5

 000  001-15-  400 CYCLE GEN ADEQUACY.                                                                2

 000  001-16-  FAC TRANSFORMER ADEQ                                                                   2

 000  001-17-  48 V BAT CHARGER                                                                       2

 000  001-18-  BONDING & GNDING SURVEY            111                                                 2

 000  001-19-  VIBRATION EVALUATION                                  11                               2
-035        -  N7829A  L/P ACCELN 1                                  11                               5
-040        -  N7830A  L/P ACCELN 2                                  11                               5
-045        -  N7831A  L/P ACCELN 3                                  11                               5
-050        -  N7832A  L/P ACCELN 4                                  11                               5
-055        -  N7833A  L/P ACCELN 5                                  11                               5
-060        -  N7834A  L/P ACCELN 6                                  11                               5
-065        -  N7835A  CRIB ACCELN 7                                 11                               5
-070        -  N7836A  CRIB ACCELN 8                                 11                               5
-075        -  N7837A  CRIB ACCELN 9                                 11                               5
-080        -  N7838A  CRIB ACCELN 10                                11                               5
-085        -  N7839A  CRIB ACCELN 11                                11                               5
-090        -  N7840A  CRIB ACCELN 12                                11                               5

 000  001-20-  MAINT FAC ADEQUACY                 222 222222 222  222222 3 22222                        2

 000  002-01-  HANDLING ADEQUACY                  3   2      2    2      ? 2                           2
```

```
OSTF-2 OBJ COMPOSITE 26 SEP 62     AE60-0653          123 123456 1234 123456 1 12345                    008

 000  002-02-  EFFECTS OF TRANSPORT                    3   2      2    2        2                        2

 000  002-03-  DECOY TRANSPORTATION ADEQUACY                                    2                         2

 000  002-04-  PROPULSION LEAK CHECK                                                                      2


 000  003-01-  MSL POD  AIR CONDITIONING               22                                                 2
-015        -  A7901T  ROTARY INV SKIN TEMP            11                                                 5
-020        -  A7905T  TLM XMTR SKIN TEMP               11                                                 5
-025        -  A7906T  ROTARY INV AMB AIR TEMP          11                                                 5
-030        -  A7907T  ARMA PLAT AMB AIR TEMP           11                                                 5
-035        -  A7908T  ARMA COMPT AMB AIR TEMP          11                                                 5
-040        -  A7909T  TLM XMTR AMB AIR TEMP            11                                                 5
-045        -  A7911T  B2 POD INLET AIR TEMP            11                                                 5
-050        -  N7046J  B1 POD INLET AIR HUM             11                                                 5
-055        -  N7050R  B2 POD AIR FLOW QUAD             11                                                 5
-060        -  N7154T  B1 POD AIR INLET TEMP            11                                                 5
-065        -  N7641T  POD AIR COND H2O IN TEMP         11                                                 5
-070        -  N7642T  POD AIR COND H2O OUT TEMP        11

 000  003-02-  PCU & POU EVALUATION                    222            1                                    2
-015        -  F7001P  LOX TANK PRESSURE                111        111  1 111    1 11                    5
-020        -  F7003P  FUEL TANK PRESSURE               111        111  1 111    1 11                    5
-025        -  F7005P  FUEL TK PRESS DUCT @ PCU         111        111  1 111    1 11                    5
-030        -  F7006P  FUEL TK PRESS DUCT @ R-O-D       111                                              5
-035        -  F7012P  LOX TK PRESS DUCT @ PCU          111        111  1 111    1 11                    5
-040        -  F7013P  LOX TK PRESS DUCT @ R-O-D        111                                              5
-045        -  F7723P  HE SUPPLY 1 @ POU                111                                              5
-046        -  F7724P  HE SUPPLY 2 @ POU                111                                              5
-055        -  F7725P  GN2 SUPPLY PRESS @ POU           111                                              5
-060        -  F7727P  REGULATED INST AIR PRESS         111                                              5
-065        -  F7731P  HE SUPPLY 2 @ TEST PT E                  1                                       5
-065        -  F7017T  FUEL TK PRESS DUCT TEMP          111                                              5
-070        -  F7018T  LOX TK PRESS DUCT TEMP           111                                              5
-075        -  N7500X  ZONE CHECK LS CLSD                       111  1 111    1 11                       5
```

```
OSTF-2 OBJ COMPOSITE 26 SEP 62    AE60-0653          123 123456 1234 123456 1 12345                 009

-080        -  N7505X  B/O VLV CLSD                                111  1 111    1 11                 5
-085        -  N7506X  DP NOT LOW                                  111  1 111    1 11                 5
-089        -  N7515X  LSR FUEL TANK PRESS                         111  1 111    1 11                 5
-090        -  N7516X  RAISE FUEL TK PRESS                         111  1 111    1 11                 5
-095        -  N7529X  PNEU INTERNAL GREEN                         111  1 111    1 11                 5
-100        -  N7530X  PNEU PH 2 AMBER                             111  1 111    1 11                 5
-105        -  N7531X  HE LOAD AMBER                               111  1 111    1 11                 5

 000  003-03-  GND HE SYS SUFFICIENCY                  222                                             2
-015        -  F7001P  LOX TANK PRESSURE                111                                             5
-020        -  F7003P  FUEL TANK PRESSURE               111                                             5
-025        -  F7723P  HE SUPPLY 1 @ PDU                111                                             5
-030        -  F7724P  HE SUPPLY 2 @ PDU                111                                             5
-035        -  N7522X  HE VLV 14 OPEN                              111  1 111    1 11                 5
-040        -  N7531X  HE LOAD AMBER                               111  1 111    1 11                 5

 000  003-04-  HE SYS CAPABILITY                       222                                             2
-010        -  F7001P  LOX TANK PRESSURE                                                               5
-015        -  F7003P  FUEL TANK PRESSURE                                                              5
-020        -  F7246P  B TK HE BTL HI PRESS             111                                             5
-025        -  F7717P  GND HT XCHGR HE OUT PRESS                                                       5
-030        -  F7723P  HE SUPPLY 1 @ PDU                                                               5
-035        -  F7724P  HE SUPPLY 2 @ PDU                                                               5
-040        -  F7735P  HE SUP TO MSL PRESS @ HCU                                                       5
-045        -  F7248T  HE TEMP HI 4 BTL                 111                                             5
-050        -  F7249T  HE TEMP LO 4 BTL                 111                                             5
-055        -  F7250T  HE TEMP LO 2 BTL                 111                                             5
-060        -  F7736T  HE SUP TO MSL TEMP @ HCU                                                        5
-065        -  F7738T  FUEL TK HE SENS LINE TEMP                                                       5
-070        -  N7531X  HE LOAD AMBER                               111  1 111    1 11                 5
-075        -  N7525X  VENT HE BTL                                 111  1 111    1 11                 5

 000  003-05-  INSTRUMENT AIR                          222                                             2
-020        -  F7727P  REGULATED INST AIR PRESS         111                                             5
-025        -  N7520X  INSTR AIR BELOW 50                          111  1 111    1 11                 5
```

```
OSTF-1 OBJ COMPOSITE 26 SEP 62    AE60-0653          123 123456 1234 123456 1 12345                 010

 000  003-06-  EVAL HYD SYSTEM                                  1                                    2
-010        -  H  33P  B1 HYD ACUM PRESS                        1                                    5
-015        -  H 140P  VERNIER HYD PRESS                        1                                    5
-020        -  H 185P  SUS HYD PUMP IN PRESS                    1                                    5
-035        -  N7526X  HYD PRESS                                111  1 111    1 11                   5

 000  003-07-  TOOLS SUFFICIENCY                     222 222222 222  222222 3 22222                   2

 000  003-08-  FLUID CONSUMPTION                         222222 2222 222222   22222                   2

 000  003-09-  LN2 COOLING ADEQUACY                  222                                              2
-025        -  F7020P  LN2 PRESS @ R-O-D            111                                              5
-030        -  F7713P  A/B LN2 SHROUD PRESS         111                                              5
-035        -  F7716P  GND HT XCHGR HE IN PRESS     111                                              5
-040        -  F7717P  GND HT XCHGR HE OUT PRESS    111                                              5
-045        -  F7720P  LN2 STOR TK XFFR PRESS       111                                              5
-050        -  F7719R  LN2 STOR TK OUT FL/RT        111                                              5
-055        -  F7248T  HE TEMP HI 4 BTL             111                                              5
-060        -  F7249T  HE TEMP LO 4 BTL             111                                              5
-065        -  F7250T  HE TEMP LO 2 BTL             111                                              5
-070        -  F7714T  GND HT XCHGR HE IN PRESS     111                                              5
-075        -  F7715T  GND HT XCHGR HE OUT PRESS    111                                              5
-080        -  F7745T  HE SUP TO MSL TEMP @ R-O-D   111                                              5

 000  003-10-  COLLIMATOR REF PRISM STABIL           333 2      2    2                                2

 000  003-11-  ACSIG & AGSP STABILITY                333 2      2    2        2                       2

 000  003-12-  MGS STATUS                            222  11212  212  2 211    111                    2
-015        -  A7902T  ARMA PLAT SKIN TEMP FWD      222  22222                                        5
-020        -  A7903T  ARMA PLAT SKIN TEMP AFT      222  22222                                        5
-025        -  A7904T  ARMA CONTROL SKIN TEMP       222  22222                                        5
-030        -  A7912T  AIG POD INNER SKIN TEMP      222  22222                                        5
-035        -  I7515A  ACCELEROMETER XF1            111  11111  111  1 111                           5
-040        -  I7516A  ACCELEROMETER YF1            111  11111  111  1 111                           5
-045        -  I7517A  ACCELEROMETER ZF1            111  11111  111  1 111                           5
```

OSTF-2 OBJ COMPOSITE 26 SEP 62 AE60-0653 123 123456 1234 123456 1 12345 011

-050	-	17518A	ACCELEROMETER XF2	111	11111	111	1	111	S
-055	-	17519A	ACCELEROMETER YF2	111	11111	111	1	111	S
-060	-	17520A	ACCELEROMETER ZF2	111	11111	111	1	111	S
-065	-	17591C	PITCH GYRO TORQUE	222	22222				S
-070	-	17592C	ROLL GYRO TORQUE	222	22222	222	2	211	S
-075	-	17593C	YAW GYRO TORQUE	222	22222	222	2	222	S
-080	-	17501D	OPTICAL AZIMUTH SIG	111	11111	111	1	111	S
-085	-	17511D	ROLL PENDULUM	111	11111	111	1	111	S
-090	-	17512D	PITCH PENDULUM	111	11111	111	1	111	S
-095	-	17549D	PITCH SERVO ERROR	222	22222	222	2	222	S
-100	-	17550D	ROLL SERVO ERROR	222	22222	222	2	222	S
-105	-	17551D	AZIMUTH SERVO ERROR	222	22222	222	2	222	S
-110	-	17552D	REDNT GYRO PICK-OFF	111	11111	111	1	111	S
-115	-	17572D	ROLL MEMORY	111	11111	111	1	111	S
-120	-	17573D	PITCH MEMORY	111	11111	111	1	111	S
-125	-	17574D	AZIMUTH MEMORY	111	11111	111	1	111	S
-130	-	17576D	ZERO LAG OUTPUT	222	22222	222	2	222	S
-135	-	17505H	COMPUTER POSITION X	111	11111	111	1	111	S
-140	-	17506H	COMPUTER POSITION Y	111	11111	111	1	111	S
-145	-	17507H	COMPUTER POSITION Z	111	11111	111	1	111	S
-150	-	17508H	DOWN RANGE ERROR FUNCTION	111	11111	111	1	111	S
-155	-	17509H	CROSS RANGE ERROR FUNCTION	111	11111	111	1	111	S
-160	-	17502L	COMPUTER VELOCITY X	111	11111	111	1	111	S
-165	-	17503L	COMPUTER VELOCITY Y	111	11111	111	1	111	S
-170	-	17504L	COMPUTER VELOCITY Z	111	11111	111	1	111	S
-175	-	17538O	ALNMT GROUP RADIAL	222	22222				S
-180	-	17539O	ALNMT GROUP TANG	222	22222				S
-185	-	17542O	ALNMT GROUP AXIAL	222	22222				S
-190	-	17015T	COMPUTER EXHAUST TEMP	111	11111				S
-195	-	17528V	YAW STEERING SIG	111	11 1	111	1	111	S
-200	-	17529V	ROLL RESOLVER SIG	111	11111	111	1	111	S
-205	-	17530V	PITCH RESOLVER SIG	111	11111	111	1	111	S
210	-	17540V	TEMP CTL AMP OUT	222	22222				S
-215	-	17580V	AZIMUTH RESOLVER SIG	111	11111	111	1	111	S
-220	-	17510W	ELAPSED TIME	111	11111	111	1	111	S
-225	-	17521X	VERNIER ENG CUTOFF SIG	111	11111	111	1	111	S

```
OSTF-2 OBJ COMPOSITE 26 SEP 62    AE60-0653          123 123456 1234 123456 1 12345                    012

-230      -  I7522X  SUS ENG CUTOFF SIG              111  11111  111  1 111                            5
-235      -  I7527X  PRE-ARM RELAY CLSD              111  11111  111  1 111                            5
-240      -  I7537X  ELEVATION WARNING               111  11111  111  1 111                            5
-245      -  I7570X  STAGING SIGNAL                  111  11111  111  1 111                            5
-250      -  I7611X  START COUNTDOWN                 111  11111  111  1 111                            5
-255      -  I76[illegible]X  START FINE ALNMT-TRIG MODE    111  11111  111  1 111                            5
-260      -  I7613X  Z AXIS VERT-FINE ALNMT          111  11111  111  1 111                            5
-265      -  I7614X  FINE ALNMT COMPLETE             111  11111  111  1 111                            5
-270      -  I7615X  COMPUTER TEST COMPLETE          111  11111  111  1 111                            5
-275      -  I7616X  ST X ACCELEROMETER OFFSET       111  11111  111  1 111                            5
-280      -  I7617X  ACCELEROMETER TEST COMPL        111  11111  111  1 111                            5
-285      -  I7618X  IGS READY                       111  11111  111  1 111                            5
-290      -  I7619X  GO INERTIAL COMMAND             111  11111  111  1 111                            5
-295      -  I7620X  MGS INERTIAL                    111  11111  111  1 111                            5
-300      -  I7621X  ZERO Z ACCELEROMETER COMPL      111  11111  111  1 111                            5
-305      -  I7622X  SCALE X PLUS 1G                 111  11111  111  1 111                            5
-310      -  I7623X  SCALE X MINUS 1G                111  11111  111  1 111                            5
-315      -  I7624X  START ZERO X ACCELEROMETER      111  11111  111  1 111                            5
-320      -  I7625X  RETURN TO READY REQ             111  11111  111  1 111                            5
-325      -  I7626X  RETURN TO READY COMPLETE        111  11111  111  1 111                            5
-330      -  I7627X  GO ON VERT MEMORY               111  11111  111  1 111                            5
-335      -  I7628X  GO ON AZIMUTH MEMORY            111  11111  111  1 111                            5
-340      -  I7630X  GYRO A IN BAND                  111  11111  111  1 111                            5
-345      -  I7631X  GYRO B IN BAND                  111  11111  111  1 111                            5
-346      -  N7050R  B2 POD AIR FLOW QUAD 2                      1                 111                  5
-347      -  N7155R  B2 POD AIR FLOW QUAD 3                      1                 111                  5
-348      -  N7048T  B2 AIR INLET TEMP QUAD 2                    1                 111                  5
-349      -  N7156T  B2 AIR INLET TEMP QUAD 3                    1                 111                  5
-350      -  N7517X  GUID FAIL MARGINAL                          111  1 111                            5
-355      -  N7527X  GUIDANCE STANDBY                            111  1 111                            5
-360      -  N7534X  GUIDANCE COMMIT                             111  1 111                            5
-365      -  N7537X  GUID READY AMBER                            111  1 111                            5

000  003-13-  R/V TOOLS ADEQUACY                    1   2       2    2       3 2                          2

000  003-14-  R/V PRE-LNCH MONITORING                      222    2    2 2                               2
```

```
OSTF-2 OBJ COMPOSITE 26 SEP 62    AE60-0653        123 123456 1234 123456 1 12345                 013

-015        -  N7524X  R/V BAT TEMP                          111  1 111    1 11                    5
-020        -  Y7054X  LAUNCH CONTROL POWER             111  111  1 111    1 11                    5
-025        -  Y7055X  START COUNTDOWN POWER            111  111  1 111    1 11                    5
-030        -  Y7056X  28 VDC VERIFICATION              111  111  1 111    1 11                    5
-035        -  Y7061X  MARK 4 R/V                       111  111  1 111    1 11                    5
-040        -  Y7064X  115 VAC VERIFICATION             111  111  1 111    1 11                    5
-045        -  Y7065X  START COUNTDOWN VERIFY           111  111  1 111    1 11                    5
-050        -  Y7066X  TARGET A SET                     111  111  1 111    1 11                    5
-055        -  Y7067X  TARGET B SET                     111  111  1 111    1 11                    5
-060        -  Y7071X  START COUNTDOWN SIGNAL           111  111  1 111    1 11                    5
-065        -  Y7072X  28 VDC RECEIVER                  111  111  1 111    1 11                    5

 000  003-15-  R/V SELF-TEST CAPABILITY                2    2    2        2                       2
-015        -  Y7052X  R/V BAT HTR THERMOSTAT           1    1    1                                5
-020        -  Y7059X  R/V CONTINUITY                   1    1    1                                5
-025        -  Y7062X  R/V TACTICAL                     1    1    1                                5
-030        -  Y7069X  TARGET A SELECT                  1    1    1                                5
-035        -  Y7070X  TARGET B SELECT                  1    1    1                                5

 000  003-16-  R/V ELECTRICAL CHECKOUT                 2    2    2                                  2
-015        -  Y7059X  R/V COUNTINUITY                  1    1    1                                5
-020        -  Y7062X  R/V TACTICAL                     1    1    1                                5
-025        -  Y7069X  TARGET A SELECT                  1    1    1                                5
-030        -  Y7070X  TARGET B SELECT                  1    1    1                                5

 000  003-18-  ELECTROMAGNETIC INTERFERENCE TEST                          1 11                    2

 000  003-19-  EMI ON ARMA LINES                  111                                               2

 000  003-23-  EMI ON ACOUSTICA LINES             222                                               2

 000  003-24-  ALIGNMENT DATA                          11         2 2      2                       2
-015        -  A7902T  ARMA PLAT SKIN TEMP FWD          22                                        5
-020        -  A7903T  ARMA PLAT SKIN TEMP AFT          22                                        5
-025        -  A7904T  ARMA CONTROL SKIN TEMP           22                                        5
-030        -  A7912T  AIG POD INNER SKIN TEMP          22                                        5
-035        -  I7515A  ACCELEROMETER XF1                11         1 1      1                       5
```

OSTF-2 OBJ COMPOSITE 26 SEP 62 AE60-0653 123 123456 1234 123456 1 123'5 014

-040	-	I7516A	ACCELEROMETER YF1	11	1 1	1	5
-045	-	I7517A	ACCELEROMETER ZF1	11	1 1	1	5
-050	-	I7518A	ACCELEROMETER XF2	11	1 1	1	5
-051	-	I7519A	ACCELEROMETER YF2	11	1 1	1	5
-055	-	I7520A	ACCELEROMETER ZF2	11	1 1	1	5
-060	-	I7591C	PITCH GYRO TORQUE	22			5
-065	-	I7592C	ROLL GYRO TORQUE	22	2 2	2	5
-070	-	I7593C	YAW GYRO TORQUE	22	2 2	2	5
-075	-	I7501D	OPTICAL AZIMUTH SIG	11	1 1	1	5
-080	-	I7511D	ROLL PENDULUM	11	1 1	1	5
-085	-	I7512D	PITCH PENDULUM	11	1 1	1	5
-090	-	I7549D	PITCH SERVO ERROR	22	2 2	2	5
-095	-	I7550D	ROLL SERVO ERROR	22	2 2	2	5
-100	-	I7551D	AZIMUTH SERVO ERROR	22	2 2	2	5
-105	-	I7552D	REDNT GYRO PICK-OFF	11	1 1	1	5
-110	-	I7572D	ROLL MEMORY	11	1 1	1	5
-115	-	I7573D	PITCH MEMORY	11	1 1	1	5
-120	-	I7574D	AZIMUTH MEMORY	11	1 1	1	5
-125	-	I7576D	ZERO LAG OUTPUT	22	2 2	2	5
-130	-	I7505M	COMPUTER POSITION X	11	1 1	1	5
-135	-	I7506M	COMPUTER POSITION Y	11	1 1	1	5
-140	-	I7507M	COMPUTER POSITION Z	11	1 1	1	5
-145	-	I7508M	DOWN RANGE ERROR FUNCTION	11	1 1	1	5
-150	-	I7509M	CROSS RANGE ERROR FUNCTION	11	1 1	1	5
-155	-	I7502L	COMPUTER VELOCITY X	11	1 1	1	5
-160	-	I7503L	COMPUTER VELOCITY Y	11	1 1	1	5
-165	-	I7504L	COMPUTER VELOCITY Z	11	1 1	1	5
-170	-	I7538O	ALIGNMENT GROUP RADIAL	22			5
-175	-	I7539O	ALIGNMENT GROUP TAN	22			5
-180	-	I7542O	ALIGNMENT GROUP AXIAL	22			5
-185	-	I7015T	COMPUTER EXHAUST TEMP	11			5
-190	-	I7528V	YAW STEERING SIG	11	1 1	1	5
-195	-	I7529V	ROLL RESOLVER SIG	11	1 1	1	5
-200	-	I7530V	PITCH RESOLVER SIG	11	1 1	1	5
-205	-	I7540V	TEMP CTL AMP OUT	11			5
-210	-	I7580V	AZIMUTH RESOLVER SIG	11	1 1	1	5

OSTF-2 OBJ COMPOSITE 26 SEP 62 AE60-0653 123 123456 1234 123456 1 12345 015

-215	-	I7510W	ELAPSED TIME				1 1	1		5
-220	-	I7521X	VERNIER ENG CUTOFF SIG		11		1 1	1		5
-225	-	I7522X	SUS ENG CUTOFF SIG		11		1 1	1		5
-230	-	I7527X	PRE-ARM RELAY CLSD		11		1 1	1		5
-235	-	I7537X	ELEVATION WARNING		11		1 1	1		5
-240	-	I7570X	STAGING SIGNAL		11		1 1	1		5
-245	-	I7611X	START COUNTDOWN		11		1 1	1		5
-250	-	I7612X	START FINE ALNMT-TRIG MODE		11		1 1	1		5
-255	-	I7613X	Z AXIS VERT-FINE ALNMT		11		1 1	1		5
-260	-	I7614X	FINE ALNMT COMPLETE		11		1 1	1		5
-265	-	I7615X	COMPUTER TEST COMPLETE		11		1 1	1		5
-270	-	I7616X	ST X ACCELEROMETER OFFSET		11		1 1	1		5
-275	-	I7617X	ACCELEROMETER TEST COMPL		11		1 1	1		5
-280	-	I7618X	IGS READY		11		1 1	1		5
-285	-	I7619X	GO INERTIAL COMMAND		11		1 1	1		5
-290	-	I7620X	MGS INERTIAL		11		1 1	1		5
-295	-	I7621X	ZERO Z ACCELEROMETER COMPL		11		1 1	1		5
-300	-	I7622X	SCALE X PLUS 1G		11		1 1	1		5
-305	-	I7623X	SCALE X MINUS 1G		11		1 1	1		5
-310	-	I7624X	ST ZERO X ACCELEROMETER		11		1 1	1		5
-315	-	I7625X	RETURN TO READY REQ		11		1 1	1		5
-320	-	I7626X	RETURN TO READY COMPLETE		11		1 1	1		5
-325	-	I7627X	GO ON VERT MEMORY		11		1 1	1		5
000	003-25-		MGS STATUS /W/S EMI TESTS/							2
000	003-26-		SOLV TK PRESS G-2000	2		2				2
000	003-28-		DECOY SUBSYSTEM MGE ADEQUACY.					2		2
000	004-01-		MAPCHE MISSILE CHECKOUT AT MANS	2		2	2	2		2
000	004-02-		MAPCHE MSL C/O AT LAUNCH SITE	2		2	2	2	2	2
000	004-03-		OGE/MGE-MAPCHE-FAC-MSL COMPAT	2		2	2	2		2

OSTF-2 OBJ COMPOSITE 26 SEP 62 AE60-0653 123 123456 1234 123456 1 12345 016

000	004-04-	IGS-MAPCHE COMPAT	2	2	2	2		2
-015	-	I7505M COMPUTER POSITION X	1	1	1	1		5
-020	-	I7506M COMPUTER POSITION Y	1	1	1	1		5
-025	-	I7507M COMPUTER POSITION Z	1	1	1	1		5
-030	-	I7508M RANGE ERROR FUNCTION	1	1	1	1		5
-035	-	I7509M AZIMUTH ERROR FUNCTION	1	1	1	1		5
-040	-	I7502L COMPUTER VELOCITY X	1	1	1	1		5
-045	-	I7503L COMPUTER VELOCITY Y	1	1	1	1		5
-050	-	I7504L COMPUTER VELOCITY Z	1	1	1	1		5
-055	-	I7528V YAW STEERING SIGNAL	1	1	1	1		5
-060	-	I7529V ROLL RESOLVER SIGNAL	1	1	1	1		5
-065	-	I7530V PITCH RESOLVER SIGNAL	1	1	1	1		5
-070	-	I7580V AZM RESOLVER SIGNAL	1	1	1	1		5
-075	-	I7510W ELAPSED TIME	1	1	1	1		5
-080	-	I7521X VERN ENG CUTOFF SIGNAL	1	1	1	1		5
-085	-	I7522X SUS ENG CUTOFF SIGNAL	1	1	1	1		5
-090	-	I7527X PRE-ARM RELAY CLSD	1	1	1	1		5
-095	-	I7570X STAGING SIGNAL	1	1	1	1		5
000	004-05-	MAPCHE-PU COMPAT	2	2	2	2		2
000	005-01-	IGS STABILITY	2	2	111			2
-015	-	A7902T ARMA PLAT SKIN TEMP FWD	2					5
-020	-	A7903T ARMA PLAT SKIN TEMP AFT	2					5
-025	-	A7904T ARMA CONTROL SKIN TEMP	2					5
-030	-	A7907T ARMA PLAT AMB AIR TEMP	2					5
-035	-	A7912T AIG POD INNER SKIN TEMP	2					5
-040	-	H7807X L/P LOCK ASSY OPEN	2	2	2 2			5
-045	-	H7812X L/P LOCK ASSY CLSD	2	2	2 2			5
-050	-	I7515A ACCELEROMETER XF1	2	2	2 2			5
-055	-	I7516A ACCELEROMETER YF1	2	2	2 2			5
-060	-	I7517A ACCELEROMETER ZF1	2	2	2 2			5
-065	-	I7518A ACCELEROMETER XF2	2	2	2 2			5
-070	-	I7519A ACCELEROMETER YF2	2	2	2 2			5
-075	-	I7520A ACCELEROMETER ZF2	2	2	2 2			5
-080	-	I7591C PITCH GYRO TORQUE	2					5

OSTF-2 OBJ COMPOSITE 26 SEP 62 AE60-0653 123 123456 1234 123456 1 12345 017

-085	-	I7592C	ROLL GYRO TORQUE	2	2	2 2		5
-090	-	I7593C	YAW GYRO TORQUE	2	2	2 2		5
-095	-	I7501D	OPTICAL AZIMUTH SIGNAL	2	2	2 2		5
-100	-	I7511D	ROLL PENDULUM	2	2	2 2		5
-105	-	I7512D	PITCH PENDULUM	2	2	2 2		5
-110	-	I7505H	COMPUTER POSITION X	2	2	2 2		5
-115	-	I7506H	COMPUTER POSITION Y	2	2	2 2		5
-120	-	I7507H	COMPUTER POSITION Z	2	2	2 2		5
-125	-	I7508H	DOWN RANGE ERROR FUNCTION	2	2	2 2		5
-130	-	I7509H	CROSS RANGE ERROR FUNCTION	2	2	2 2		5
-135	-	I7502L	COMPUTER VELOCITY X	2	2	2 2		5
-140	-	I7503L	COMPUTER VELOCITY Y	2	2	2 2		5
-145	-	I7504L	COMPUTER VELOCITY Z	2	2	2 2		5
-150	-	I7015T	COMPUTER EXHAUST	2				5
-155	-	I7528V	YAW STEERING SIGNAL		2	2 2		5
-160	-	I7529V	ROLL RESOLVER SIGNAL	2	2	2 2		5
-165	-	I7530V	PITCH RESOLVER SIGNAL	2	2	2 2		5
-170	-	I7540V	TEMP CONTROL AMP OUT	2				5
-175	-	I7580V	AZIMUTH RESOLVER SIGNAL	2	2	2 2		5
-180	-	I7510H	ELAPSED TIME	2	2	2 2		5
-185	-	I7537X	ELEVATION WARNING	2	2	2 2		5
-190	-	I7611X	START COUNTDOWN	2	2	2 2		5
-195	-	I7612X	START FINE ALNMT-TRIG MODE	2	2	2 2		5
-200	-	I7613X	Z AXIS VERT-FINE ALNMT	2	2	2 2		5
-205	-	I7614X	FINE ALNMT COMPLETE	2	2	2 2		5
-210	-	I7615X	COMPUTER TEST COMPLETE	2	2	2 2		5
-215	-	I7616X	ST X ACCELEROMETER OFFSET	2	2	2 2		5
-220	-	I7617X	ACCELEROMETER TEST COMPLETE	2	2	2 2		5
-225	-	I7618X	IGS READY	2	2	2 2		5
-230	-	I7619X	GO INERTIAL COMMAND	2	2	2 2		5
-235	-	I7620X	MGS INERTIAL	2	2	2 2		5
-240	-	I7621X	ZERO Z ACCELEROMETER COMPL	2	2	2 2		5
-245	-	I7622X	SCALE X PLUS 1G	2	2	2 2		5
-250	-	I7623X	SCALE X MINUS 1G	2	2	2 2		5
-255	-	I7624X	START ZERO X ACCELEROMETER	2	2	2 2		5
-260	-	I7625X	RETURN TO READY REG	2	2	2 2		5

OSTF-2 OBJ COMPOSITE 26 SEP 62 AE60-0653			123	123456	1234	123456	1	12345	018
-265	-	17626X RETURN TO READY COMP		2	2	2 2			5
-270	-	17627X GO ON VERT MEMORY		2	2	2 2			5
-275	-	17628X GO ON AZIMUTH MEMORY		2	2	2 2			5
-280	-	17630X GYRO A IN BAND		2	2	2 2			5
-285	-	17631X GYRO B IN BAND		2	2	2 2			5
-290	-	N7032T GUIDANCE POD XHST TEMP		2					5
000	005-02-	FAC AIR CONDITIONING			1	111			2
000	005-03-	THR SECT HEATER ADEQ	2						2
000	005-04-	28VDC POWER							2
000	005-05-	400 CYCLE GEN ADEQUACY							2
000	005-06-	MSL POD AIR CONDITIONING	22						2
000	005-07-	PCU EVALUATION	222			2			2
000	005-08-	ACSIG & AGSP STABILITY	333	2	2	2			2
000	005-09-	R/V PRE-LNCH MONITORING		222	222	2 2			2
000	005-10-	FUEL THERMAL COMPENSATION							2
000	005-11-	PU SENSOR READINESS		22222	222	2 2			2
000	005-12-	PROP SYS READINESS		11	222	2 2			2
000	006-01-	OGE RESPONSE TO L/C		22222					2
-015	-	N7002X SELECT A BUTTON		11111	111	1 111		1 11	5
-020	-	N7003X SELECT B BUTTON		11111	111	1 111		1 11	5
-025	-	N7030X ALARM RESET SWITCH		11111	111	1 111		1 11	5
-030	-	N7042X START ABORT SWITCH		11111	111	1 111		1 11	5
000	006-02-	COUNTDOWN TIME		22222	222	2 222		2 22	2

OSTF-2 OBJ COMPOSITE 26 SEP 62	AE60-0653	123	123456	1234	123456	1 12345	019
-045	- N7509X READY FOR COMMIT			111	1 111	1 11	5
-050	- N7514X AUTOPILOT ON AMBER			111	1 111	1 11	5
-055	- N7529X PNEU INTERNAL GREEN			111	1 111	1 11	5
-060	- N7530X PNEU PH 2 AMBER			111	1 111	1 11	5
-065	- N7531X HE LOAD AMBER			111	1 111	1 11	5
-070	- N7533X ENGINE START AMBER			111	1 111	1 11	5
-075	- N7535X PWR INTERNAL GREEN			111	1 111	1 11	5
000	006-03- OGE DEFICIENCIES		22222	222	22222	2222	2
000	006-04- L/C SAFE STATUS		333				2
-050	- N7513X MSL LIFT DOWN & LOCKED			111	1		5
000	006-05- R/V PRE-LNCH MONITOR EVAL		222	2			2
-020	- Y7052X R/V BAT HTR THERMOSTAT		111	111	1 111	1 11	5
-025	- Y7054X LAUNCH CONTROL POWER		111	111	1 111	1 11	5
-030	- Y7055X START COUNTDOWN POWER		111	111	1 111	1 11	5
-035	- Y7056X 28 VDC VERIFICATION		111	111	1 111	1 11	5
-040	- Y7059X R/V CONTINUITY		111	111	1 111	1 11	5
-045	- Y7061X MARK 4 R/V		111	111	1 111	1 11	5
-050	- Y7062X R/V TACTICAL		111	111	1 111	1 11	5
-055	- Y7064X 115 VAC VERIFICATION		111	111	1 111	1 11	5
-060	- Y7065X START COUNTDOWN VERIFY		111	111	1 111	1 11	5
-065	- Y7066X TARGET A SET		111	111	1 111	1 11	5
-070	- Y7067X TARGET B SET		111	111	1 111	1 11	5
-075	- Y7068X MARK 3 R/V		111	111	1 111	1 11	5
-080	- Y7069X TARGET A SELECT		111	111	1 111	1 11	5
-085	- Y7070X TARGET B SELECT		111	111	1 111	1 11	5
-090	- Y7071X START COUNTDOWN SIGNAL		111	111	1 111	1 11	5
-095	- Y7072X 28 VDC RECEIVER		111	111	1 111	1 11	5
000	007-01- PNEUMATIC SYSTEM READINESS			111	1 111		2
-015	- F7001P LOX TANK PRESSURE			111	1 111	1 11	5
-020	- F7003P FUEL TANK PRESSURE			111	1 111	1 11	5
-025	- N7035P DIFFERENTIAL PRESS/GAGE/			111	1 111		5

```
OSTF-2 OBJ COMPOSITE 26 SEP 62    AE60-0653          123 123456 1234 123456 1 12345                 020

-035        -  F1145P  S CTL HE BTL DISCH PRESS                  111  1 111                          5
-040        -  F1247T  B TK HE BTL TEMP                          111                                  5
-045        -  F1290T  S CTL HE BOTTLE TEMP                      111  1 111                          5
-055        -  F   1P  LOX TANK HELIUM PRESS                     111  1 111                          5
-060        -  F   3P  FUEL TANK HELIUM PRESS                    111  1 111                          5
-065        -  F 145P  S CTL HE BTL DISCH PRESS                  111  1 111                          5
-070        -  F 246P  B TANK HE BTL HI PRESS                    111  1 111                          5
-075        -  F 247T  B TK HE BTL TEMP                               1 111                          5

 000  007-02-  FLIGHT CONTROL READINESS                   222     111  1 111                          2
-015        -  N7514X  AUTOPILOT ON AMBER                        111  1 111    1 11                  5
-020        -  N7518X  AUTOPILOT FAIL MARGINAL                   111  1 111    1 11                  5
-025        -  N7519X  FLT PROGRAMMER SAFE                       111  1 111    1 11                  5
-030        -  N7521X  AUTOPILOT FAIL                            111  1 111    1 11                  5
-035        -  N7532X  PROGRAMMER ARMED AMBER                    111  1 111    1 11                  5
-040        -  N7536X  AUTOPILOT TEST AMBER                      111  1 111    1 11                  5
-050        -  S  61D  ROLL DISP GYRO SIG                        111  1 111                          5
-055        -  S  62D  PITCH DISP GYRO SIG                       111  1 111                          5
-060        -  S  63D  YAW DISP GYRO SIG                         111  1 111                          5
-065        -  S 203D  B1 PITCH/ROLL POS                         111  1 111                          5
-070        -  S 204D  B2 PITCH/ROLL POS                         111  1 111                          5
-075        -  S 205D  B1 YAW POS                                111  1 111                          5
-080        -  S 206D  B2 YAW POS                                111  1 111                          5
-085        -  S 222D  V1 PITCH POS                              111  1 111                          5
-090        -  S 223D  V2 PITCH POS                              111  1 111                          5
-095        -  S 233D  V1 YAW/ROLL POS                           111  1 111                          5
-100        -  S 234D  V2 YAW/ROLL POS                           111  1 111                          5
-105        -  S 256D  SUS YAW POS                               111  1 111                          5
-110        -  S 257D  SUS PITCH POS                             111  1 111                          5
-115        -  S  52R  ROLL RATE GYRO SIG                        111  1 111                          5
-120        -  S  53R  PITCH RATE GYRO SIG                       111  1 111                          5
-125        -  S  54R  YAW RATE GYRO SIG                         111  1 111                          5

 000  007-03-  ELECTRICAL SYS FUNCT                       222     111  1 111                          2
-030        -  E  50Q  400 CYC AC PWR SUP                  111     111  1 111                          5
-035        -  E  28V  MSL SYS INPUT                       111     111  1 111                          5
```

```
OSTF-2 OBJ COMPOSITE 26 SEP 62    AE60-0653          123 123456 1234 123456 1 12345                021

-040        -  E  51V  400 CYCLE AC PHASE A              111    111  1 111                          5
-045        -  N7510X  PWR TO INTERNAL                          111  1 111    1 11                   5
-050        -  N7511X  PWR TO EXTERNAL                          111  1 111    1 11                   5
-055        -  N7523X  DC AT MSL                                111  1 111    1 11                   5

 000  007-04-  HYD SYS READINESS                                 111  1 111                          2
-015        -  H  33P  B1 HYD ACCUMULATOR PRESS                 111  1 111                          5
-020        -  H 140P  VERN ENG HYD PRESS                       111  1 111                          5
-025        -  H 185P  S HYD PUMP INLET PRESS                   111  1 111                          5

 000  007-05-  PROPELLANT LOADING READINESS                 222    111  1 111                          2
-015        -  F7001P  LOX TANK PRESSURE                  111    111  1 111    1 11                   5
-020        -  F7003P  FUEL TANK PRESSURE                 111    111  1 111    1 11                   5
-025        -  P7549P  LOX STOR TK ULLAGE PRESS           111    111  1 111    1 11                   5
-030        -  P7564P  LOX STOR TK TO MSL DP              111    111  1 111    1 11                   5
-035        -  P7709P  LOX TOP TK ULLAGE PRESS            111    111  1 111    1 11                   5
-040        -  P7115X  RAPID TOP VLV OPEN                 111    111  1 111    1 11                   5
-045        -  P7116X  RAPID TOP VLV CLSD                 111    111  1 111    1 11                   5
-050        -  P7117X  TOPPING VLV OPEN                   111    111  1 111    1 11                   5
-055        -  P7118X  TOPPING VLV CLSD                   111    111  1 111    1 11                   5
-060        -  P7225X  LOX RAPID LD VLV OPEN              111    111  1 111    1 11                   5
-065        -  P7226X  LOX FINE LD VLV OPEN               111    111  1 111    1 11                   5
-070        -  P7227X  LOX RAPID LD VLV CLSD              111    111  1 111    1 11                   5
-075        -  P7228X  LOX FINE LD VLV CLSD               111    111  1 111    1 11                   5
-080        -  U7011X  RAPID FILL LOX CTL-1               111    111  1 111    1 11                   5
-085        -  U7012X  TOPPING LOW CTL-1                  111    111  1 111    1 11                   5
-090        -  U7013X  TOPPING HIGH CTL-1                 111    111  1 111    1 11                   5
-095        -  U7014X  100% LOX CTL-1                     111    111  1 111    1 11                   5
-100        -  U7015X  RAPID FILL LOX CTL-2               111    111  1 111    1 11                   5
-105        -  U7016X  TOPPING LOW CTL-2                  111    111  1 111    1 11                   5
-110        -  U7017X  TOPPING HIGH CTL-2                 111    111  1 111    1 11                   5
-115        -  U7018X  100% LOX CTL-2                     111    111  1 111    1 11                   5
-125        -  F   1P  LOX TANK HELIUM PRESS                     111  1 111                          5
-130        -  F   3P  FUEL TANK HELIUM PRESS                    111  1 111                          5

 000  007-06-  PROPULSION SYS READINESS                    22     111  1 111                          2
```

OSTF-2 OBJ COMPOSITE 26 SEP 62		AE60-0653	123	123456	1234	123456	1 12345	022
-015	-	F7001P LOX TANK PRESSURE		11	111	1 111	1 11	5
-020	-	F7003P FUEL TANK PRESSURE		11	111	1 111	1 11	5
-022	-	P7126V S IGN STAGE CTL VOLT			111			5
-025	-	P7935X FUEL A/B F&D VLV CLSD		11	111	1 111	1 11	5
-030	-	P7964X LOX A/B F&D VLV CLSD		11	111	1 111	1 11	5
-040	-	P1002P B1 FUEL PUMP INLET PRESS			111	1 111		5
-045	-	P1038P B2 FUEL PUMP DISCH PRESS			111	1 111		5
-047	-	P1039P B1 FUEL PUMP DISCH PRESS			111	1 111		5
-050	-	P1530T S LOX PUMP INLET TEMP			111	1 111		5
-060	-	F 1P LOX TANK HELIUM PRESS			111	1 111		5
-065	-	F 3P FUEL TANK HELIUM PRESS			111	1 111		5
-070	-	P 3P B2 LOX PUMP INLET PRESS			111	1 111		5
-075	-	P 38P B2 FUEL PUMP DISCH PRESS			111	1 111		5
-080	-	P 39P B1 FUEL PUMP DISCH PRESS			111	1 111		5
-085	-	P 330P S FUEL PUMP DISCH PRESS			111	1 111		5
000	007-07-	ENG IGNITION ELEC SIG		2212	111	1 111		2
000	007-08-	PU SYSTEM READINESS		2212	111	1 111	1 11	2
-015	-	N7028X COMMIT START BUTTON		2 222	111	1 111	1 11	5
-018	-	U7126V AA COMP 28 VDC INPUT					1 11	5
-019	-	U7134V AA TIME SHARED OSC OUTPUT					1 11	5
-020		U7125X AA COMPUTER RESET		1 111	111	1 111		5
-025	-	U7132X AA STA COUNTER OUTPUT		1 111	111	1 111		5
-035	-	U 113V AA VLV POS FEEDBACK			111	1 111		5
-040	-	U 135X AA SENSOR SIG			111	1 111		[illegible]
000	007-09-	TELEMETRY SYSTEM READINESS		22211	111	1 111		2
000	008-01-	PNEU SYSTEM READINESS						2
000	008-02-	FLIGHT CONTROL READINESS		2				2
000	008-03-	ELECTRICAL SYSTEM FUNCT		2				2

```
OSTF-2 OBJ COMPOSITE 26 SEP 62    AE60-0653        123 123456 1234 123456 1 12345                    023

000  008-05-  PROPELLANT LOAD                                  2                                       2

000  008-06-  PROPULSION SYS READINESS                                                                 2

000  008-07-  PU SYSTEM READINESS                              2                                       2

000  008-08-  ENG IGNITION ELEC SIG                            2                                       2

000  009-01-  READINESS PRESENTATION                           22222        1        1                 2
-015        -  N7754N  LAUNCH CONSOLE RH CAMERA                11111  111  11111    1111              5
-020        -  N7755N  LAUNCH CONSOLE LH CAMERA                11111  111  11111    1111              5

000  009-02-  LCC DISCRETE OCCURRANCE                          22222                                   2
-015        -  N7754N  LAUNCH CONSOLE RH CAMERA                11111  111  1 111    1 11              5
-020        -  N7755N  LAUNCH CONSOLE LH CAMERA                11111  111  1 111    1 11              5
-025        -  N7507X  MSL LIFT COMMIT START                         111  1 111    1 11              5
-030        -  N7508X  AUTOMATIC PRESSN                              111  1 111    1 11              5
-035        -  N7512X  COMMIT LOCKUP                                 111  1 111    1 11              5
-040        -  N7528X  MSL LIFT UP & LOCKED                          111  1 111    1 11              5

000  009-03-  LCC CABINETS ENVIRONMENT                                                                2
-025        -  N7801J  L/C EQUIPMENT RH HUM                                                          5
-030        -  N7802J  SILO LOWER RH HUM                                                             5
-035        -  N7807T  L/C EQUIP AIR RETURN TEMP                                                     5
-040        -  N7621T  ELCT EQUIP AIR IN #1 TEMP                                                     5
-045        -  N7622T  ELCT EQUIP AIR IN #2 TEMP                                                     5
-050        -  N7623T  ELCT EQUIP AIR IN #3 TEMP                                                     5
-055        -  N7624T  ELCT EQUIP AIR IN #4 TEMP                                                     5
-060        -  N7625T  ELCT EQUIP AIR IN #5 TEMP                                                     5
-065        -  N7626T  ELCT EQUIP AIR OUT #1 TEMP                                                    5
-070        -  N7627T  ELCT EQUIP AIR OUT #2 TEMP                                                    5
-075        -  N7628T  ELCT EQUIP AIR OUT #3 TEMP                                                    5
-080        -  N7629T  ELCT EQUIP AIR OUT #4 TEMP                                                    5
-085        -  N7630T  ELCT EQUIP AIR OUT #5 TEMP
```

```
OSTF-2 OBJ COMPOSITE 26 SEP 62    AE60-0653          123 123456 1234 123456 1 12345                 024

 000  009-04-  LCC-R/V COMPATIBILITY                    22222                                        2
-010        -  Y7056X  28 VDC VERIFICATION              11111  111  1 111    1 11                    5
-015        -  Y7059X  R/V CONTINUITY                   11111  111  1 111    1 11                    5
-020        -  Y7061X  MARK 4 R/V                       11111  111  1 111    1 11                    5
-025        -  Y7062X  R/V TACTICAL                     11111  111  1 111    1 11                    5
-030        -  Y7068X  MARK 3 R/V                       11111  111  1 111    1 11                    5
-035        -  Y7069X  TARGET A SELECT                  11111  111  1 111    1 11                    5
-040        -  Y7070X  TARGET B SELECT                  11111  111  1 111    1 11                    5
-045        -  Y7071X  START COUNTDOWN SIG              11111  111  1 111    1 11                    5


 000  010-01-  LO2 CHILLDOWN ADEQUACY                   22212  211                                    2
-015        -  P7001P  LOX TANK PRESSURE                11111  111  1 111    1 11                    5
-020        -  P7549P  LOX STOR TK ULLAGE PRESS         11111  111  1 111    1 11                    5
-025        -  P7564P  LOX STOR TK TO MSL DP            11111                                        5
-030        -  P7565P  LOX XFER LINE TO MSL PRESS       11111                                        5
-035        -  P7578P  LOX TO L/P DISCON IN PRESS       11111                                        5
-040        -  P7682P  MSL LOX TANK DP                  11111                                        5
-045        -  P7696P  LOX TOP LINE PRESS @ R-O-D       11111                                        5
-050        -  P7697P  MAIN LINE PRESS @ R-O-D          11111                                        5
-055        -  P7699P  MAIN LOX FILTER DP               11111                                        5
-060        -  P7700P  LOX RAPID LD VLV DP              11111                                        5
-065        -  P7701P  LOX FINE LD VLV DP               11111                                        5
-068        -  P7913P  LOX FINE LD IN PRESS                   111                                    5
-069        -  P7916P  LOX DRAIN VLV L-16 OUT PRES            1                                      5
-070        -  P7104R  LOX TOP FL/RT VENTURI            11111                                        5
-075        -  P7109R  LOX TOP BLEED FL/RT              11111                                        5
-080        -  P7114T  LOX TOP L/P DISCON IN TEMP       11111                                        5
-085        -  P7134T  B1 LOX PUMP IN TEMP              11111                                        5
-090        -  P7304T  SUS LOX PUMP IN TEMP             11111                                        5
-095        -  P7305T  B2 LOX PUMP IN TEMP              11111                                        5
-100        -  P7571T  MAIN LINE TEMP-L/P DISCON        11111  111                                    5
-105        -  P7698T  MAIN LOX LINE TEMP @ R-O-D       11111                                        5
-110        -  P7702T  LOX TOP LINE TEMP @ R-O-D        11111                                        5
-115        -  P7115X  RAPID TOP VLV OPEN               11111  111  1 111    1 11                    5
-120        -  P7116X  RAPID TOP VLV CLSD               11111  111  1 111    1 11                    5
```

```
OSTF-2 OBJ COMPOSITE 26 SEP 62     AE60-0653          123 123456 1234 123456 1 12345                 025

-125        -  P7117X  TOPPING VLV OPEN                 11111  111  1 111    1 11                    5
-130        -  P7118X  TOPPING VLV CLSD                 11111  111  1 111    1 11                    5
-135        -  P7129X  VENT VLV N80 OPEN                11111  111  1 111    1 11                    5
-140        -  P7130X  VENT VLV N80 CLSD                11111  111  1 111    1 11                    5
-145        -  P7131X  LOX DRAIN VLV N60 OPEN           11111  111  1 111    1 11                    5
-150        -  P7132X  LOX DRAIN VLV N60 CLSD           11111  111  1 111    1 11                    5
-155        -  P7193X  LOX TOP TK VENT VLV OPEN         11111  111  1 111    1 11                    5
-160        -  P7194X  LOX TOP TK VENT VLV CLSD         11111  111  1 111    1 11                    5
-165        -  P7223X  LOX STOR TK VENT VLV CLSD        11111  111  1 111    1 11                    5
-170        -  P7225X  LOX RAPID LD VLV OPEN            11111  111  1 111    1 11                    5
-171        -  P7226X  LOX FINE LD VLV OPEN             11111  111  1 111    1 11                    5
-172        -  P7227X  LOX RAPID LD VLV CLSD            11111  111  1 111    1 11                    5
-173        -  P7228X  LOX FINE LD VLV CLSD             11111  111  1 111    1 11                    5
-180        -  P7236X  LOX STOR TK VENT VLV OPEN        11111  111  1 111    1 11                    5
-185        -  P7241X  LOX CHILLDWN VLV N-1 CLSD              111  1 111    1 11                    5
-186        -  P7251X  LOX CHLDN VLV N2 CLSD                  111                                   5
-187        -  P7252X  LOX CHLDN VLV N3 CLSD                  111                                   5
-188        -  P7253X  LOX CHLDN VLV N50 CLSD                 111                                   5
-192        -  F    1P  LOX TK HE PRESS                       111  1 111    1 11                    5

 000  010-02-  LO2 TRANSFER SEQUENCES                   22212  211                                   2
-015        -  P7549P  LOX STOR TK ULLAGE PRESS         11111  111  1 111    1 11                    5
-020        -  P7709P  LOX TOP TK ULLAGE PRESS          11111  111  1 111    1 11                    5
-025        -  P7115X  RAPID TOP VLV OPEN               11111  111  1 111    1 11                    5
-030        -  P7116X  RAPID TOP VLV CLSD               11111  111  1 111    1 11                    5
-035        -  P7117X  TOPPING VLV OPEN                 11111  111  1 111    1 11                    5
-040        -  P7118X  TOPPING VLV CLSD                 11111  111  1 111    1 11                    5
-045        -  P7129X  VENT VLV N80 OPEN                11111  111  1 111    1 11                    5
-050        -  P7130X  VENT VLV N80 CLSD                11111  111  1 111    1 11                    5
-055        -  P7131X  LOX DRAIN VLV N60 OPEN           11111  111  1 111    1 11                    5
-060        -  P7132X  LOX DRAIN VLV N60 CLSD           11111  111  1 111    1 11                    5
-065        -  P7193X  LOX TOP TK VENT VLV OPEN         11111  111  1 111    1 11                    5
-070        -  P7194X  LOX TOP TK VENT VLV CLSD         11111  111  1 111    1 11                    5
-075        -  P7223X  LOX STOR TK VENT VLV CLSD        11111  111  1 111    1 11                    5
-080        -  P7225X  LOX RAPID LD VLV OPEN            11111  111  1 111    1 11                    5
-085        -  P7226X  LOX FINE LD VLV OPEN             11111  111  1 111    1 11                    5
```

OSTF-2 OBJ COMPOSITE 26 SEP 62 AE60-0653				123	123456	1234	123456	1	12345	026
-090	-	P7227X	LOX RAPID LD VLV CLSD		11111	111	1 111		1 11	5
-095	-	P7228X	LOX FINE LD VLV CLSD		11111	111	1 111		1 11	5
-100	-	P7236X	LOS STOR TK VENT VLV OPEN		11111	111	1 111		1 11	5
-105	-	P7238X	LOX DRAIN VLV OPEN		11111	111	1 111		1 11	5
-110	-	P7240X	LOX DRAIN VLV CLSD		11111	111	1 111		1 11	5
-111	-	P7251X	LOX CHLDN VLV N2 CLSD			111				5
-112	-	P7252X	LOX CHLDN VLV N3 CLSD			111				5
-113	-	P7253X	LOX CHLDN VLV N50 CLSD			111				5
-115	-	P7957X	LOX VLV L7 OPEN		11111					5
-120	-	P7958X	LOX VLV L7 CLSD		11111					5
-125	-	P7959X	LOX VLV L6 OPEN		11111					5
-130	-	P7960X	LOX VLV L6 CLSD		11111					5
-135	-	P7963X	LOX A/B F&D VLV OPEN		11111	111	1 111		1 11	5
-140	-	P7964X	LOX A/B F&D VLV CLSD		11111	111	1 111		1 11	5
-145	-	U7011X	RAPID FILL LOX CTL-1		11111	111	1 111		1 11	5
-150	-	U7012X	TOPPING LOW CTL-1		11111	111	1 111		1 11	5
-155	-	U7013X	TOPPING HIGH CTL-1		11111	111	1 111		1 11	5
-160	-	U7014X	100% LOX CTL-1		11111	111	1 111		1 11	5
-165	-	U7015X	RAPID FILL LOX CTL-2		11111	111	1 111		1 11	5
-170	-	U7016X	TOPPING LOW CTL-2		11111	111	1 111		1 11	5
-175	-	U7017X	TOPPING HIGH CTL-2		11111	111	1 111		1 11	5
-180	-	U7018X	100% LOX CTL-2		11111	111	1 111		1 11	5
000	010-03-	LO2 TRANSFER PREFORMANCE			22212	211	2 211			2
-025	-	P7001P	LOX TANK PRESSURE		11111	111	1 111		1 11	5
-030	-	P7105P	TCU CTL MANIFOLD PRESS		11111					5
-035	-	P7106P	TCU LOX IN PRESS		11111					5
-040	-	P7107P	TCU LOX FILTER IN PRESS		11111					5
-045	-	P7108P	LOX L/P DISCON IN PRESS		11111	111	1 111		1 11	5
-050	-	P7135P	MAIN LOX LINE DRAIN PRESS		11111					5
-055	-	P7546P	GN2 STOR TK DISCH PRESS		11111					5
-060	-	P7549P	LOX STOR TK ULLAGE PRESS		11111	111	1 111		1 11	5
-065	-	P7564P	LOX STOR TK TO MSL DP		11111	111	1 111		1 11	5
-070	-	P7565P	LOX XFER LINE TO MSL PRESS		11111					5
-075	-	P7578P	LOX TO L/P DISCON IN PRESS		11111	111				5
-080	-	P7682P	MSL LOX TANK DP		11111					5

OSTF-2 OBJ COMPOSITE 26 SEP 62 AE60-0653 123 123456 1234 123456 1 12345 027

-085	-	P7690P	LOX TOP LINE PRESS @ R-O-D	11111				S
-090	-	P7697P	MAIN LINE PRESS @ R-O-D	11111				S
-095	-	P7699P	MAIN LOX FILTER DP	11111	111	1 111		S
-100	-	P7700P	LOX RAPID LD VLV DP	11111				S
-105	-	P7701P	LOX FINE LD VLV DP	11111				S
-110	-	P7706P	LOX DRAIN VLV DP	11111				S
-115	-	P7707P	LOX FILL FILTER DP	11111				S
-120	-	P7709P	LOX TOP TK ULLAGE PRESS	11111	111	1 111	1 11	S
-125	-	P7710P	LOX STOR TK PRESN LINE	11111				S
-130	-	P7711P	LOX TOP TK PRESN LINE	11111				S
-135	-	P7907P	B1 LOX PUMP IN PRESS	11111				S
-140	-	P7913P	FINE LD VLV L1 IN PRESS	11111	111			S
-145	-	P7914P	RAPID LD VLV L2 IN PRESS	11111				S
-150	-	P7915P	LOX DRAIN VLV L16 IN PRESS	11111				S
-155	-	P7917P	LOX STOR TK FILL VLV L7 IN	11111				S
-160	-	P7972P	STOR TK PRESN VLV IN PRESS	11111				S
-165	-	P7104R	LOX TOP FL/RT VENTURI	11111	111			S
-170	-	P7109R	LOX TOP BLEED FL/RT	11111	111			S
-175	-	P7113T	TCU LOX INLET TEMP	11111				S
-180	-	P7114T	LOX TOP L/P DISCON IN TEMP	11111				S
-185	-	P7134T	B1 LOX PUMP IN TEMP	11111				S
-190	-	P7304T	SUS LOX PUMP IN TEMP	11111				S
-195	-	P7305T	B2 LOX PUMP IN TEMP	11111				S
-200	-	P7547T	GN2 STOR TK DISCH TEMP	11111				S
-205	-	P7571T	MAIN LINE TEMP-L/P DISCON	11111				S
-210	-	P7698T	MAIN LOX LINE TEMP @ R-O-D	11111				S
-215	-	P7702T	LOX TOP LINE TEMP @ R-O-D	11111				S
-220	-	P7193X	LOX TOP TK VENT VLV OPEN	11111	111	1 111	1 11	S
-225	-	P7194X	LOX TOP TK VENT VLV CLSD	11111	111	1 111	1 11	S
-230	-	P7223X	LOX STOR TK VENT VLV CLSD	11111	111	1 111	1 11	S
-235	-	P7236X	LOX STOR TK VENT VLV OPEN	11111	111	1 111	1 11	S
-240	-	P7947X	LOX STOR TK FULL	11111	111	1 111	1 11	S
-245	-	U7080P	LOX TANK HEAD PRESS	11111				S
-250	-	U7011X	RAPID FILL LOX CTL-1	11111	111	1 111	1 11	S
-255	-	U7012X	TOPPING LOW CTL-1	11111	111	1 111	1 11	S
-260	-	U7013X	TOPPING HIGH CTL-1	11111	111	1 111	1 11	S

```
OSTF-2 OBJ COMPOSITE 26 SEP 62    AE60-0653          123 123456 1234 123456 1 12345                028

-265        -  U7014X  100% LOX CTL-1                  11111  111  1 111    1 11                    5
-270        -  U7015X  RAPID FILL LOX CTL-2            11111  111  1 111    1 11                    5
-275        -  U7016X  TOPPING LOW CTL-2               11111  111  1 111    1 11                    5
-280        -  U7017X  TOPPING HIGH CTL-2              11111  111  1 111    1 11                    5
-285        -  U7018X  100% LOX CTL-2                  11111  111  1 111    1 11                    5
-288        -  F    1P  LOX TK HE PRESS                        111  1 111    1 11                    5

 000  010-04-  LO2 LOADING SENSOR SYS                  22212  211                                    2
-015        -  F7001P  LOX TANK PRESSURE               11111  111  1 111    1 11                    5
-020        -  P7549P  LOX STOR TK ULLAGE PRESS        11111  111  1 111    1 11                    5
-025        -  P7564P  LOX STOR TK TO MSL DP           11111  111  1 111    1 11                    5
-030        -  P7682P  MSL LOX TANK DP                 11111                                        5
-035        -  P7709P  LOX TOP TK ULLAGE PRESS         11111  111                                    5
-040        -  P7104R  LOX TOPPING FL/RT VENTURI       11111  111                                    5
-045        -  P7109R  LOX TOPPING BLEED FL/RT         11111  111                                    5
-050        -  P7115X  RAPID TOP VLV OPEN              11111  111  1 111    1 11                    5
-055        -  P7116X  RAPID TOP VLV CLSD              11111  111  1 111    1 11                    5
-060        -  P7117X  TOPPING VLV OPEN                11111  111  1 111    1 11                    5
-065        -  P7118X  TOPPING VLV CLSD                11111  111  1 111    1 11                    5
-070        -  P7225X  LOX RAPID LD VLV OPEN           11111  111  1 111    1 11                    5
-075        -  P7226X  LOX FINE LD VLV OPEN            11111  111  1 111    1 11                    5
-080        -  P7227X  LOX RAPID LD VLV CLSD           11111  111  1 111    1 11                    5
-085        -  P7228X  LOX FINE LD VLV CLSD            11111  111  1 111    1 11                    5
-090        -  U7080P  LOX TANK HEAD PRESS             11111                                        5
-095        -  U7011X  RAPID FILL LOX CTL-1            11111  111  1 111    1 11                    5
-100        -  U7012X  TOPPING LOW CTL-1               11111  111  1 111    1 11                    5
-105        -  U7013X  TOPPING HIGH CTL-1              11111  111  1 111    1 11                    5
-110        -  U7014X  100% LOX CTL-1                  11111  111  1 111    1 11                    5
-115        -  U7015X  RAPID FILL LOX CTL-2            11111  111  1 111    1 11                    5
-120        -  U7016X  TOPPING LOW CTL-2               11111  111  1 111    1 11                    5
-125        -  U7017X  TOPPING HIGH CTL-2              11111  111  1 111    1 11                    5
-130        -  U7018X  100% LOX CTL-2                  11111  111  1 111    1 11                    5
-140        -  F    1P  LOX TK HE PRESS                        111  1 111    1 11                    5

 000  010-05-  LO2 XFER INTERFACE EFFECTS              22212  222                                    2
```

OSTF-2 OBJ COMPOSITE 26 SEP 62 AE60-0653 123 123456 1234 123456 1 12345 029

000	010-06-	LO2 LOADING TIME	22212	211				2
-020	-	F7001P LOX TANK PRESSURE	11111					5
-030	-	N7024X START C/D BUTTON	11111	111	1 111	1 11		5
-035	-	N7028X COMMIT START BUTTON	11111	111	1 111	1 11		5
-040	-	P7108P LOX L/P DISCON IN PRESS	11111					5
-045	-	P7549P LOX STOR TK ULLAGE PRESS	11111	111	1 111	1 11		5
-050	-	P7564P LOX STOR TK TO MSL DP	11111					5
-055	-	P7565P LOX XFER LINE TO MSL PRESS	11111					5
-060	-	P7578P LOX TO L/P DISCON IN PRESS	11111					5
-065	-	P7682P MSL LOX TK DP	11111					5
-070	-	P7696P LOX TOP LINE PRESS @ R-O-D	11111					5
-075	-	P7697P MAIN LINE PRESS @ R-O-D	11111					5
-078	-	P7699P MAIN LOX FILTER DP	11111					5
-080	-	P7700P LOX RAPID LOAD VLV DP	11111					5
-085	-	P7701P LOX FINE LOAD VLV DP	11111					5
-090	-	P7709P LOX TOP TK ULLAGE PRESS	11111					5
-095	-	P7907P B1 LOX PUMP IN PRESS	11111					5
-100	-	P7913P LOX FINE LD VLV L-1 IN	11111					5
-105	-	P7914P LOX RAPID LD VLV L-2 IN	11111					5
-110	-	P7104R LOX TOPPING FL/RT VENTURI	11111					5
-115	-	P7109R LOX TOPPING BLEED FL/RT	11111					5
-120	-	P7113T TCU LOX IN TEMP	11111					5
-125	-	P7114T LOX TOP TEMP @ L/P DISCON	11111					5
-130	-	P7134T B1 LOX PUMP IN TEMP	11111					5
-135	-	P7304T SUS LOX PUMP IN TEMP	11111					5
-140	-	P7305T B2 LOX PUMP IN TEMP	11111					5
-145	-	P7698T MAIN LOX LINE TEMP @ R-O-D	11111					5
-150	-	P7702T LOX TOP LINE TEMP @ R-O-D	11111					5
-151	-	P7225X LOX RAPID LD VLV OPEN		111	1 111	1 11		5
-152	-	P7226X LOX FINE LD VLV OPEN		111	1 111	1 11		5
-153	-	P7227X LOX RAPID LD VLV CLSD		111	1 111	1 11		5
-155	-	U7080P LOX TANK HEAD PRESS	11111					5
-160	-	U7011X RAPID FILL LOX CTL-1	11111	111	1 111	1 11		5
-165	-	U7012X TOPPING LOW CTL-1	11111	111	1 111	1 11		5
-170	-	U7013X TOPPING HIGH CTL-1	11111	111	1 111	1 11		5
-175	-	U7014X 100% LOX CTL-1	11111	111	1 111	1 11		5

OSTF-2 OBJ COMPOSITE 26 SEP 62			AE60-0653	123	123456	1234	123456	1	12345	030
-180	-	U7015X	RAPID FILL LOX CTL-2	11111	111	1	111	1	11	5
-185	-	U7016X	TOPPING LOW CTL-2	11111	111	1	111	1	11	5
-190	-	U7017X	TOPPING HIGH CTL-2	11111	111	1	111	1	11	5
-195	-	U7018X	100% LOX CTL-2	11111	111	1	111	1	11	5
000	010-07-	LO2 STORAGE TK BACK PRESS		22212						2
-015	-	P7001P	LOX TANK PRESS	11111						5
-020	-	P7105P	TCU CTL MANIFOLD PRESS	11111						5
-025	-	P7106P	TCU LOX IN PRESS	11111						5
-030	-	P7107P	TCU LOX FILTER IN PRESS	11111						5
-035	-	P7108P	LOX L/P DISCON IN PRESS	11111						5
-040	-	P7549P	LOX STOR TK ULLAGE PRESS	11111						5
-045	-	P7564P	LOX STOR TK TO MSL DP	11111						5
-050	-	P7565P	LOX XFER LINE TO MSL PRESS	11111						5
-055	-	P7578P	LOX TO L/P DISCON IN PRESS	11111						5
-060	-	P7682P	MSL LOX TANK DP	11111						5
-065		P7696P	LOX TOP LINE PRESS @ R-O-D	11111						5
-070	-	P7709P	LOX TOP TK ULLAGE PRESS	11111						5
-075	-	P7914P	RAPID LD VLV L-2 IN PRESS	11111						5
-080	-	P7104R	LOX TOPPING FL/RT VENTURI	11111						5
-085	-	P7109R	LOX TOPPING BLEED FL/RT	11111						5
-090	-	P7113T	TCU LOX INLET TEMP	11111						5
-095	-	P7114T	LOX TOP L/P DISCON IN TEMP	11111						5
-100	-	P7134T	B1 LOX PUMP IN TEMP	11111						5
-105	-	P7304T	SUS LOX PUMP IN PRESS	11111						5
-110	-	P7305T	B2 LOX PUMP IN PRESS	11111						5
-115	-	P7571T	MAIN LINE TEMP-L/P DISCON	11111						5
-120	-	P7698T	MAIN LOX LINE TEMP @ R-O-D	11111						5
-125	-	P7702T	LOX TOP LINE TEMP @ R-O-D	11111						5
-145	-	P7115X	RAPID TOP VLV OPEN	11111						5
-150	-	P7116X	RAPID TOP VLV CLSD	11111						5
-155	-	P7117X	TOPPING VLV OPEN	11111						5
-160	-	P7118X	TOPPING VLV CLSD	11111						5
-165	-	P7193X	LOX TOP TK VENT VLV OPEN	11111						5
-170	-	P7194X	LOX TOP TK VENT VLV CLSD	11111						5
-175	-	P7223X	LOX STOR TK VENT VLV CLSD	11111						5

```
OSTF-2 OBJ COMPOSITE 26 SEP 62    AE60-0653          123 123456 1234 123456 1 12345                031

-180        -  P7225X  LOX RAPID LD VLV OPEN            11111                                      5
-185        -  P7226X  LOX FINE LD VLV OPEN             11111                                      5
-190        -  P7227X  LOX RAPID LD VLV CLSD            11111                                      5
-195        -  P7228X  LOX FINE LD VLV CLSD             11111                                      5
-200        -  P7236X  LOX STOR TK VENT VLV OPEN        11111                                      5
-202        -  U7011X  RAPID FILL LOX CTL-1             11111                                      5
-203        -  U7012X  TOPPING LOW CTL-1                11111                                      5
-204        -  U7013X  TOPPING HIGH CTL-1               11111                                      5
-205        -  U7014X  100% LOX CTL-1                   11111                                      5
-210        -  U7015X  RAPID FILL LOX CTL-2             11111                                      5
-215        -  U7016X  TOPPING LOW CTL-2                11111                                      5
-220        -  U7017X  TOPPING HIGH CTL-2               11111                                      5
-225        -  U7018X  100% LOX CTL-2                   11111                                      5

 000  010-08-  LO2 SPRAY & FREEZING                       212  211                                   2
-020        -  P7108P  LOX L/P DISCON IN PRESS          11111  111                                   5
-025        -  P7578P  LOX TO L/P DISCON IN PRESS       11111                                      5
-030        -  P7114T  LOX TOP L/P DISCON IN TEMP       11111                                      5
-035        -  P7571T  MAIN LINE TEMP-L/P DISCON        11111                                      5
-040        -  U7019N  L/P LOX DISCON CAMERA            11111  111                                   5
-045        -  U7020N  HOT-COLD DISCON CAMERA           11111                                      5

 000  010-10-  BOOSTER TURBOPUMP OPERATION                                                           2
-015        -  P7137B  B1 PUMP SPEED LO                                                             5
-020        -  P7138B  B2 PUMP SPEED LO                                                             5

 000  011-01-  FUEL TRANSFER PERFORMANCE                                                            2
-010        -  F7003P  FUEL TANK PRESSURE                                                           5
-015        -  P7567P  FUEL LVL TANK ULLAGE PRESS                                                   5
-020        -  P7690P  GND FUEL FILTER DP                                                           5
-025        -  P7691P  FUEL FILL LINE IN PRESS                                                      5
-030        -  P7692P  FILL LINE PRESS-L/P DISCON                                                   5
-035        -  P7693P  FILL LINE PRESS @ R-O-D                                                      5
-040        -  P7909P  FUEL VLV F1 IN PRESS                                                         5
-045        -  P7569R  GND FUEL SUPPLY FL/RT                                                        5
```

```
OSTF-2 OBJ COMPOSITE 26 SEP 62    AE60-0653        123 123456 1234 123456 1 12345          032

-050        -  P7566T  FUEL LINE TO MSL TEMP                                                 5
-055        -  P7572T  MSL TANK FUEL TEMP                                                    5
-060        -  P7922X  FUEL VLV F1 OPEN                                                      5
-065        -  P7923X  FUEL VLV F1 CLSD                                                      5
-066        -  P7924X  FUEL VLV F2 OPEN                                                      5
-070        -  P7925X  FUEL VLV F2 CLSD                                                      5
-075        -  P7926X  FUEL VLV F3 OPEN                                                      5
-080        -  P7927X  FUEL VLV F3 CLSD                                                      5
-085        -  P7928X  FUEL VLV NF4 OPEN                                                     5
-100        -  P7929X  FUEL VLV NF4 CLSD                                                     5
-105        -  P7930X  FUEL VLV NF1 OPEN                                                     5
-110        -  P7931X  FUEL VLV NF1 CLSD                                                     5
-115        -  P7932X  FUEL VLV NF2 OPEN                                                     5
-120        -  P7933X  FUEL VLV NF2 CLSD                                                     5
-125        -  P7934X  FUEL A/B F&D VLV OPEN                                                 5
-130        -  P7935X  FUEL A/B F&D VLV CLSD                                                 5
-135        -  P7936X  FUEL LVL TK F11 PUMP OPEN                                             5
-140        -  P7937X  FUEL SENSOR LS-10                                                     5
-145        -  P7938X  FUEL LVL TK FULL                                                      5
-150        -  P7939X  FUEL LVL TK HALF FULL                                                 5
-155        -  U7081P  FUEL TANK HEAD PRESS                                                  5
-160        -  U7021X  FUEL LVL NOT LOW-1                                                    5
-165        -  U7022X  FUEL LVL NOT LOW-2                                                    5
-170        -  U7023X  FUEL LVL TOO HIGH-1                                                   5
-175        -  U7024X  FUEL LVL TOO HIGH-2                                                   5

 000  011-02-  FUEL THERMAL COMPENSATION                                                     2
-010        -  F7003P  FUEL TANK PRESS                                                       5
-015        -  F7567P  FUEL LVL TK ULLAGE PRESS                                              5
-020        -  F7911P  FUEL PRESN TK DISCH PRESS                                             5
-025        -  P7566T  FUEL LINE TO MSL TEMP                                                 5
-030        -  P7572T  MSL TANK FUEL TEMP                                                    5
-035        -  P7908T  FUEL PRESN TK DISCH TEMP                                              5
-040        -  P7922X  FUEL VLV F1 OPEN                                                      5
-045        -  P7923X   FUEL VLV F1 CLSD                                                     5
-050        -  P7924X  FUEL VLV F2 OPEN                                                      5
```

OSTF-2 OBJ COMPOSITE 26 SEP 62 AE60-0653 123 123456 1234 123456 1 12345 073

-055	-	P7925X	FUEL VLV F2 CLSD	5
-060	-	P7926X	FUEL VLV F3 OPEN	5
-065	-	P7927X	FUEL VLV F3 CLSD	5
-070	-	P7928X	FUEL VLV NF4 OPEN	5
-075	-	P7929X	FUEL VLV NF4 CLSD	5
-080	-	P7930X	FUEL VLV NF1 OPEN	5
-085	-	P7931X	FUEL VLV NF1 CLSD	5
-090	-	P7932X	FUEL VLV NF2 OPEN	5
-095	-	P7933X	FUEL VLV NF2 CLSD	5
-100	-	P7934X	FUEL A/B FGD VLV OPEN	5
-105	-	P7935X	FUEL A/B FGD VLV CLSD	5
-110	-	P7938X	FUEL LVL TK FULL	5

000	011-03-		FUEL CONTAMINATION	2

000	011-04-		FUEL PUMPING SYSTEM	2
-005	-	F7003P	FUEL TANK PRESSURE	5
-010	-	P7688P	GND FUEL PUMP OUT PRESS	5
-015	-	P7689P	GND FUEL PUMP IN PRESS	5
-020	-	P7691P	FUEL FILL LINE IN PRESS	5
-025	-	P7692P	FILL LINE PRESS-L/P DISCON	5
-030	-	P7693P	FILL LINE PRESS @ R-O-D	5
-035	-	P7909P	FUEL VLV F1 INLET PRESS	5
-040	-	P7569R	GND FUEL SUPPLY FL/RT	5
-045	-	P7195X	FUEL VLV F4 OPEN	5
-050	-	P7196X	FUEL VLV F4 CLSD	5
-055	-	P7922X	FUEL VLV F1 OPEN	5
-060	-	P7923X	FUEL VLV F1 CLSD	5
-065	-	P7924X	FUEL VLV F2 OPEN	5
-070	-	P7925X	FUEL VLV F2 CLSD	5
-075	-	P7926X	FUEL VLV F3 OPEN	5
-080	-	P7927X	FUEL VLV F3 CLSD	5
-085	-	P7928X	FUEL VLV NF4 OPEN	5
-090	-	P7929X	FUEL VLV [illegible] CLSD	5
-100	-	P7930X	FUEL VLV NF1 OPEN	5
-105	-	P7931X	FUEL VLV NF1 CLSD	5

```
OSTF-2 OBJ COMPOSITE 26 SEP 62    AE60-0653        123 123456 1234 123456 1 12345        034

-110        -  P7932X  FUEL VLV NF2 OPEN                                                  5
-115        -  P7933X  FUEL VLV NF2 CLSD                                                  5
-120        -  P7934X  FUEL A/B F&D VLV OPEN                                              5
-125        -  P7935X  FUEL A/B F&L VLV CLSD                                              5

 000  011-05-  DISCRETE/SEQUENCE OPRN                                                     2
-010        -  P7567P  FUEL LVL TANK ULLAGE PRESS                                         5
-015        -  P7691P  FUEL FILL LINE IN PRESS                                            5
-020        -  P7692P  FILL LINE PRESS-L/P DISCON                                         5
-025        -  P7693P  FILL LINE PRESS @ R-O-D                                            5
-030        -  P7909P  FUEL VLV F1 INLET PRESS                                            5
-035        -  P7911P  FUEL PRESN TK DISCH PRESS                                          5
-040        -  P7572T  MSL TANK FUEL PRESS                                                5
-045        -  P7195X  FUEL VLV F4 OPEN                                                   5
-050        -  P7196X  FUEL VLV F4 CLSD                                                   5
-055        -  P7922X  FUEL VLV F1 OPEN                                                   5
-060        -  P7923X  FUEL VLV F1 CLSD                                                   5
-065        -  P7924X  FUEL VLV F2 OPEN                                                   5
-070        -  P7925X  FUEL VLV F2 CLSD                                                   5
-075        -  P7926X  FUEL VLV F3 OPEN                                                   5
-080        -  P7927X  FUEL VLV F3 CLSD                                                   5
-085        -  P7928X  FUEL VLV NF4 OPEN                                                  5
-090        -  P7929X  FUEL VLV NF4 CLSD                                                  5
-095        -  P7930X  FUEL VLV NF1 OPEN                                                  5
-100        -  P7931X  FUEL VLV NF1 CLSD                                                  5
-105        -  P7932X  FUEL VLV NF2 OPEN                                                  5
-110        -  P7933X  FUEL VLV NF2 CLSD                                                  5
-115        -  P7934X  FUEL A/B F&D VLV OPEN                                              5
-120        -  P7935X  FUEL A/B F&D VLV CLSD                                              5
-125        -  P7937X  FUEL SENSOR LS-10                                                  5
-130        -  P7938X  FUEL LVL TK FULL                                                   5
-135        -  P7939X  FUEL LVL TK HALF FULL                                              5
-140        -  U7081P  FUEL TANK HEAD PRESS                                               5
-145        -  U7021X  FUEL LVL NOT LOW-1                                                 5
-150        -  U7022X  FUEL LVL NOT LOW-2                                                 5
-155        -  U7023X  FUEL LVL TOO HIGH-1                                                5
```

```
OSTF-2 OBJ COMPOSITE 26 SEP 62    AE60-0653        123 123456 1234 123456 1 12345          035

-160        -  U7024X  FUEL LVL TOO HIGH-2                                                  5

 000  011-06-  FUEL TRANSFER INTERFACE                                                       2
-015        -  F7003P  FUEL TANK PRESSURE                                                    5
-020        -  U7021X  FUEL LVL NOT LOW-1                                                    5
-025        -  U7022X  FUEL LVL NOT LOW-2                                                    5
-030        -  U7023X  FUEL LVL TOO HIGH-1                                                   5
-035        -  U7024X  FUEL LVL TOO HIGH-2                                                   5

 000  011-08-  FUEL LEVEL                                                                    2
-010        -  P7566T  FUEL LINE TO MSL TEMP                                                 5
-015        -  P7572T  MISSILE TANK FUEL TEMP                                                5

 000  011-09-  FUEL PREVALVE LEAKAGE                  22222  2                               2


 000  012-01-  MAINTENANCE CONFERENCE NETWORK              22   22222  2 22222               2

 000  012-02-  LCO SIGNALING SYSTEM                        22   22222    22222               2

 000  012-03-  DIRECT LINE SYSTEM                          22   22222  2 22222               2

 000  012-04-  DIAL LINE SYSTEM                            22   22222  2 22222               2

 000  012-05-  LAUNCH ENABLE SYSTEM                         2    2 22  2  2 22               2

 000  012-06-  BACKGROUND NOISE                            22    2 22  2  2 22               2

 000  012-07-  RADIO AND AUDIO INTERFERENCE                                                  2

 000  012-08-  COMMUNICATIONS EQUIP MAINTENANCE            22   22222  2 22222               2

 000  012-09-  MAINTENANCE DATA AND PROCEDURES             22   22222  2 22222               2


 000  013-01-  CONTAMINATION BUILD-UP                                                        2
```

OSTF-2 OBJ COMPOSITE 26 SEP 62	AE60-0653	123	123456	1234	123456	1	12345			036
000 014-01-	T.O. DATA ADEQUACY	333	222222	222	222222	2	22222			2
000 014-02-	FUNCTIONAL ANALYSIS ADEQUACY	333	222222	222	222222	2	22222			2
000 014-03-	TECH ORDER WEAPON SYSTEM SUPPORT			2222	22222	2	22222			2
000 014-04-	PERSONNEL REQUIREMENTS		222222		22222	2	22222			2
000 015- -	WEAPONS SYSTEM INSPECTIONS		2	3	3	3	2			2
000 016- -	UNSCHEDULED MAINT EFFECTS		222222	3333	222222	3	22222			2
000 017- -	QUALITY CONTROL ADEQUACY		222222		22222	3	22222			2
000 018- -	MAINT RECORDS ADEQUACY		222222		22222	2	22222			2
000 019- -	MAINT PROCEDURES ADEQUACY		222222		22222	2	23333			2
000 020- -	SQUADRON MAINT EFFECTIVENESS		222222		22222		22222			2
000 021- -	24 HR SELF SUFFICIENCY FIRST READ						2			2
000 022- -	OPERATIONAL CONTROL BY PERSONNEL		222222		22222	2	22222			2
000 023- -	RELATIONSHIP MAINT CONCEPT		222222		22222	3	22222			2

OSTF-2 OBJ COMPOSITE 26 SEP 62 AE60-0653 123 123456 1234 123456 1 12345 037

000	024-	-	WEAPON SYSTEM FIRST READINESS	111	111	2
-075		-	F7001P LOX TANK PRESSURE	1 1	1 1	5
-080		-	F7003P FUEL TANK PRESSURE	1 1	1 1	5
-085		-	F7005P FUEL TK PRESS DUCT @ PCU	1 1	1 1	5
-090		-	F7012P LOX TK PRESS DUCT @ PCU	1 1	1 1	5
-095		-	F1145P S CTL HE BTL DISCH PRESS	1 1	1 1	5
-100		-	F 247T B TK HE BTL TEMP	1 1	1 1	5
-110		-	F 1P LOX TK HELIUM PRESS	1 1	1 1	5
-115		-	F 3P FUEL TK HELIUM PRESS	1 1	1 1	5
-120		-	H 33P B1 HYD ACUM PRESS	1 1	1 1	5
-125		-	S 140P /ERN HYD PRESS	1 1	1 1	5
-130		-	1 185P S HYD PUMP INLET PRESS	1 1	1 1	5
-140		-	N7050R B2 POD AIR FLOW QUAD 2		111	5
-145		-	N7155R B2 POD AIR FLOW QUAD 3		111	5
-150		-	N7048T B2 AIR INLET TEMP QUAD 2		111	5
-155		-	N7156T B2 AIR INLET TEMP QUAD 3		111	5
-165		-	N7028X COMMIT START BUTTON	1 1	1 1	5
-170		-	N7535X PWR INTERNAL GREEN	1 1	1 1	5
-175		-	N7984X MISSILE AWAY	1 1	1 1	5
-180		-	P7108P LOX L/P DISC IN PRESS	1 1	1 1	5
-185		-	P7549P LOX STOR TK ULLAGE PRESS	1 1	1 1	5
-190		-	P7709P LOX TOP TK ULLAGE PRESS	1 1	1 1	5
-195		-	P7115X RAPID TOP VLV OPEN	1 1	1 1	5
-200		-	P7116X RAPID TOP VLV CLSD	1 1	1 1	5
-205		-	P7117X TOPPING VLV OPEN	1 1	1 1	5
-210		-	P7118X TOPPING VLV CLSD	1 1	1 1	5
-215		-	P7193X LOX TOP TK VENT VLV OPEN	1 1	1 1	5
-220		-	P7194X LOX TOP TK VENT VLV CLSD	1 1	1 1	5
-225		-	P7225X LOX RAPID LD VLV OPEN	1 1	1 1	5
-230		-	P7226X LOX FINE LD VLV OPEN	1 1	1 1	5
-235		-	P7227X LOX RAPID LD VLV CLSD	1 1	1 1	5
-240		-	P7228X LOX FINE LD VLV CLSD	1 1	1 1	5
-245		-	P7238X LOX DRAIN VLV OPEN	1 1	1 1	5
-250		-	P7240X LOX DRAIN VLV CLSD	1 1	1 1	5
-255		-	U7011X RAPID FILL LOX CTL-1	1 1	1 1	5
-260		-	U7012X TOPPING LOW CTL-1	1 1	1 1	5

OSTF-2 OBJ COMPOSITE 26 SEP 62 AE60-0653 123 123456 1234 123456 1 12345 038

-265	-	U7013X	TOPPING HIGH CTL-1			1 1		1 1	5
-270	-	U7014X	100% LOX CTL-1			1 1		1 1	5
-275	-	U7015X	RAPID FILL LOX CTL-2			1 1		1 1	5
-280	-	U7016X	TOPPING LOW CTL-2			1 1		1 1	5
-285	-	U7017X	TOPPING HIGH CTL-2			1 1		1 1	5
-290	-	U7018X	100% LOX CTL-2			1 1		1 1	5
-295	-	U7021X	FUEL LVL NOT LOW-1			1 1		1 1	5
-300	-	U7022X	FUEL LVL NOT LOW-2			1 1		1 1	5
-305	-	U7023X	FUEL LVL TOO HIGH-1			1 1		1 1	5
-310	-	U7024X	FUEL LVL TOO HIGH-2			1 1		1 1	5
-320	-	S 61D	ROLL DISPL GYRO SIG			1 1		1 1	5
-325	-	S 62D	PITCH DISPL GYRO SIG			1 1		1 1	5
-330	-	S 63D	YAW DISPL GYRO SIG			1 1		1 1	5
-335	-	S 203D	B1 PITCH/ROLL POS			1 1		1 1	5
-340	-	S 204D	B2 PITCH/ROLL POS			1 1		1 1	5
-345	-	S 205D	B1 YAW POS			1 1		1 1	5
-350	-	S 206D	B2 YAW POS			1 1		1 1	5
-355	-	S 222D	V1 PITCH POS			1 1		1 1	5
-360	-	S 223D	V2 PITCH POS			1 1		1 1	5
-365	-	S 233D	V1 YAW/ROLL POS			1 1		1 1	5
-370	-	S 234D	V2 YAW/ROLL POS			1 1		1 1	5
-375	-	S 256D	SUS YAW POS			1 1		1 1	5
-380	-	S 257D	SUS PITCH POS			1 1		1 1	5
-385	-	S 52R	ROLL RATE GYRO SIG			1 1		1 1	5
-390	-	S 53R	PITCH RATE GYRO SIG			1 1		1 1	5
-395	-	S 54R	YAW RATE GYRO SIG			1 1		1 1	5
-405	-	E 50Q	400 CPS AC PWR SUPPLY			1 1		1 1	5
-410	-	E 28V	MSL SYS INPUT VOLT			1 1		1 1	5
-415	-	E 51V	400 CPS AC PHASE A VOLT			1 1		1 1	5
-420	-	U7126V	AA COMP 28 VDC INPUT					1 1	5
-425	-	U7134V	AA TIME SHARED OSC OUTPUT					1 1	5
-435	-	H7507P	SYS HYD ACUM PRESS			1 1		1 1	5
-440	-	H7508P	UPR DR HYD ACUM PRESS			1 1		1 1	5
-445	-	H7509P	LWR DR HYD ACUM PRESS			1 1		1 1	5
-450	-	H7529P	L/P BRAKE PRESS			1 1		1 1	5
-455	-	N7803B	L/P DRIVE MOTOR SPEED			1 1		1 1	5

```
OSTF-2 OBJ COMPOSITE 26 SEP 62    AE60-0653        123 123456 1234 123456 1 12345                039

-460        -  N7908D  L/P DISPLACEMENT                                1 1      1 1                  5
-465        -  N7804F  DRIVE MOTOR TORQUE                              1 1      1 1                  5
-475        -  P1002P  B1 FUEL PUMP INLET PRESS                        1 1      1 1                  5
-480        -  P1038P  B2 FUEL PUMP DISCH PRESS                        1 1      1 1                  5
-485        -  P1039P  B1 FUEL PUMP DISCH PRESS                        1 1      1 1                  5
-490        -  P1055P  SUS LOX PUMP INLET PRESS                        1 1      1 1                  5
-495        -  P1325T  ENG COMPT AMP TEMP                              1 1      1 1                  5
-500        -  P1530T  SUS LOX PUMP INLET TEMP                         1 1      1 1                  5
-505        -  P1711T  B1 NACELLE AMB TEMP                             1 1      1 1                  5
-510        -  P1712T  B2 NACELLE AMB TEMP                             1 1      1 1                  5
-525        -  U7125X  AA COMPUTER RESET                               1 1      1 1                  5
-530        -  U7132X  AA STA COUNTER OUTPUT                           1 1      1 1                  5
-535        -  U 113V  AA VLV POS FEEDBACK                             1 1      1 1                  5
-540        -  U 135V  AA SENSOR SIG                                   1 1      1 1                  5

000  025-   -  CONTAMINATION BUILD-UP                                                                2

000  026-   -  MATHEMATICAL MODEL                  111 111111 1111 111111 1 11111                      2

000  028-   -  CRIB AND LCC DROP TESTS                                                                2

000  029-   -  VENT VALVE OPERATION                                          2                         2

000  031-   -  24 HOUR HOLD LIMITATIONS                                          1                      2

000  032-   -  COMPLEX SOFT TIME                       222222 2222 222222   22222                      2

000  033-   -  WEAPON SYSTEM SAFETY                 111 111111 1111 111111 1 11111                      2
```

OSTF-2 OBJ COMPOSITE 26 SEP 62 AE60-0653 123 123456 1234 123456 1 12345 040

000	034-	-	FLIGHT PERFORMANCE	1	1		2
-036		-	A1217P HT SHIELD DP QUAD 2	1			5
-037		-	A1218P HT SHIELD DP Y-Y AXIS	1			5
-038		-	A1219P HT SHIELD DP QUAD 1	1	1		5
-039		-	A1220P HT SHIELD DP QUAD 3	1	1		5
-040		-	A1585P HT SHIELD INSIDE PRESS 1		1		5
-042		-	A1586P HT SHIELD INSIDE PRESS 2		1		5
-043		-	A1194T HT SHIELD TEMP FWD Q4	1	1		5
-044		-	A1195T HT SHIELD TEMP FWD Q2	1	1		5
-045		-	A1780Y ARMA POD ACOUSTIC	1	1		5
-046		-	F1145P SUS CTL HE BTL OUT PRESS	1	1		5
-047		-	F1247T B TK HE BTL TEMP	1			5
-050		-	F1290T SUS CTL HE BTL TEMP	1	1		5
-052		-	N1870'' TWU NOISE 1	1	1		5
-055		-	P1529D SUS MAIN LOX VLV POS	1			5
-060		-	P1830D SUS FUEL VLV POS	1			5
-065		-	P1206O SUS ENG LOX DOME	1	1		5
-070		-	P1208O B1 ENG LOX DOME	1	1		5
-075		-	P1209O B2 ENG LOX DOME	1			5
-080		-	P1002P B1 FUEL PUMP INLET PRESS	1	1		5
-085		-	P1006P SUS THR CHAMBER PRESS	1	1		5
-090		-	P1038P B2 FUEL PUMP DISCH PRESS	1	1		5
-095		-	P1039P B1 FUEL PUMP DISCH PRESS	1	1		5
-100		-	P1056P SUS LOX PUMP INLET PRESS	1	1		5
-105		-	P1059P B2 THR CHAMBER PRESS	1	1		5
-110		-	P1060P B1 THR CHAMBER PRESS	1	1		5
-115		-	P1091P B1 LOX INJ MANIFOLD PRESS	1	1		5
-120		-	P1092P B2 LOX INJ MANIFOLD PRESS	1	1		5
-125		-	P1155P B1 GAS GEN COMBUSTOR PRESS	1	1		5
-130		-	P1184P B2 GAS GEN COMBUSTOR PRESS	1	1		5
-131		-	P1200P ENG COMPT AMB PRESS	1			5
-132		-	P1337P SGG LOX INJ MANIFOLD SRESS	1	1		5
-135		-	P1351P S LOX INJ MANIFOLD PRESS	1	1		5
-136		-	P1463P S GG FUEL INJ MAN PRESS	1			5
-145		-	P1325T ENG COMPT AMB TEMP	1	1		5
-150		-	P1550T SUS LOX PUMP INLET TEMP	1	1		5

```
OSTF-2 OBJ COMPOSITE 26 SEP 62    AE60-0653          123 123456 1234 123456 1 12345                  C41

-155        -  P1711T  B1 NACELLE AMB TEMP                          1      1                          5
-160        -  P1712T  B2 NACELLE AMB TEMP                          1      1                          5
-165        -  P1051Y  ENG COMPT ACOUSTIC                           1      1                          5
-215        -  M7604N  FWD LIFT-OFF CAMERA                          1      1                          5
-216        -  M7605N  AFT LIFT-OFF CAMERA                                 1                          5
-225        -  N7984X  MISSILE AWAY                                 1      1                          5
-230        -  N7985X  MISSILE ON STAND                             1      1                          5
-235        -  L7601P  HT SHIELD OUTSIDE PRESS 1                          1                          5
-240        -  L7602P  HT SHIELD OUTSIDE PRESS 2                          1                          5
-245        -  L7013P  FLAME DEFLECT AMB PRESS 1                          1                          5
-250        -  L7014P  FLAME DEFLECT AMB PRESS 2                          1                          5
-255        -  L7015P  FLAME DEFLECT AMB PRESS 3                          1                          5
-260        -  L7016P  FLAME DEFLECT AMB PRESS 4                          1                          5

 000  035-01-  EQUIPMENT USABILITY                     222222      22222  2  2222                     2

 000  035-02-  TECH DATA USABILITY & SUITABILITY                   22222  2 22222                     2
 000  035-03-  JOB ENVIRONMENT                         222222      22222  2 22222                     2

 000  035-04-  CUSTOMER PERSONNEL REQUIREMENTS                     22222  2 22222                     2

 000  035-05-  TRAINING                                222222      22222  2 22222                     2

 000  035-06-  OPRNAL CTL BY CUSTOMER PERSONNEL                    22222  2 22222                     2

 000  036-  -  SAC INTEGRATION                         222222    2 222222 2 22222                     2

 000  037-01-  THRUST SECT ENVIRONMENT                            1      1                          2
-015        -  A1217P  HT SHIELD DP QUAD 2                       1                                  5
-020        -  A1218P  HT SHIELD DP Y-Y AXIS                     1                                  5
-025        -  A1219P  HT SHIELD DP QUAD 1                       1      1                          5
-030        -  A1220P  HT SHIELD DP QUAD 3                       1      1                          5
-031        -  A1585P  HT SHIELD INSIDE PRESS 1                  1      1                          5
```

OSTF-2 OBJ COMPOSITE 26 SEP 62 AE60-0653 123 123456 1234 123456 1 12345 042

-032	-	A1586P	HT SHIELD INSIDE PRESS 2		1	1	5
-035	-	A1194T	HT SHIELD TEMP FWD Q4		1	1	5
-040	-	A1195T	HT SHIELD TEMP FWD Q2		1	1	5
-045	-	P1200P	ENG COMPT AMB PRESS		1		5
-050	-	P1325T	ENG COMPT AMB TEMP		1	1	5
-055	-	P1711T	B1 NACELLE AMB TEMP		1	1	5
-060	-	P1712T	B2 NACELLE AMB TEMP		1	1	5
-065	-	P1091Y	ENG COMPT ACOUSTIC		1	1	5
-071	-	A 743T	AMB @ SUS INSTR PANEL			1	5
-075	-	A 778T	ENG COMPT AMB TEMP		1	1	5
-095	-	M 185X	STAGING CAMERA BKW		1		5
-096	-	M 189X	RCP 1 PLUG DISCON			1	5
-105	-	M7604N	FWD LIFTOFF CAMERA		1	1	5
-106	-	M7605N	AFT LIFTOFF CAMERA			1	5
-110	-	M 606N	STAGING RCP Q4		1	1	5
-120	-	L7601P	HT SHIELD OUTSIDE PRESS 1			1	5
-125	-	L7602P	HT SHIELD OUTSIDE PRESS 2			1	5
000	037-02-	GUIDANCE POD ACOUSTICS.			1	1	2
-015	-	A1780Y	ARMA POD ACOUSTIC		1	1	5
000	037-03-	PROP SYS PERF			1	1	2
-012	-	P1529D	S MAIN LOX VLV POS		1		5
-015	-	P1830D	SUS FUEL VLV POS		1		5
-015	-	P1206O	SUS ENG LOX DOME		1	1	5
-020	-	P1208O	B1 ENG LOX DOME		1	1	5
-025	-	P1209O	B2 ENG LOX DOME		1		5
-030	-	P1002P	B1 FUEL PUMP INLET PRESS		1	1	5
-035	-	P1006P	SUS THR CHAMBER PRESS		1	1	5
-040	-	P1038P	B2 FUEL PUMP DISCH PRESS		1	1	5
-045	-	P1039P	B1 FUEL PUMP DISCH PRESS		1	1	5
-050	-	P1056P	SUS LOX PUMP INLET PRESS		1	1	5
-055	-	P1059P	B2 THR CHAMBER PRESS		1	1	5
-060	-	P1060P	B1 THR CHAMBER PRESS		1	1	5
-065	-	P1091P	B1 LOX INJ MANIFOLD PRESS		1	1	5
-070	-	P1092P	B2 LOX INJ MANIFOLD PRESS		1	1	5

OSTF-2 OBJ COMPOSITE 26 SEP 62 AE60-0653 123 123456 1234 123456 1 12345 043

-075	-	P1155P	B1 GAS GEN COMBUSTOR PRESS	1	1	5
-080	-	P1184P	B2 GAS GEN COMBUSTOR PRESS	1	1	5
-085	-	P1337P	S GG LOX INJ MANIFOLD PRESS	1	1	5
-090	-	P1351P	S LOX INJ MANIFOLD PRESS	1	1	5
-092	-	P1463P	S GG FUEL INJ MAN PRESS	1		5
-095	-	P1530T	SUS LOX PUMP INLET TEMP	1	1	5
-105	-	D 160X	MANUAL FUEL CUTOFF	1	1	5
-110	-	D 161X	AUTOMATIC FUEL CUTOFF	1	1	5
-115	-	F 145P	S CTL HE BTL DISCH PRESS	1	1	5
-120	-	F 246P	B TK HE BTL HI PRESS	1	1	5
-125	-	H 185P	S HYD PUMP INLET	1	1	5
-130	-	P 93B	B2 PUMP SPEED	1	1	5
-135	-	P 84B	B1 PUMP SPEED	1	1	5
-140	-	P 349B	S PUMP SPEED	1	1	5
-145	-	P 529D	S MAIN LOX VALVE POS		1	5
-150	-	P 830D	SUS FUEL VLV POS		1	5
-155	-	P 1P	B1 LOX PUMP INLET PRESS		1	5
-160	-	P 3P	B2 LOX PUMP INLET PRESS	1	1	5
-165	-	P 6P	S THRUST CHAMBER PRESS	1	1	5
-170	-	P 27P	VERNIER FUEL TK PRESS		1	5
-175	-	P 28P	V1 THRUST CHAMBER PRESS	1	1	5
-180	-	P 29P	V2 THRUST CHAMBER PRESS	1	1	5
-185	-	P 30P	VERNIER LOX TK PRESS		1	5
-190	-	P 38P	B2 FUEL PUMP DISCH PRESS	1	1	5
-195	-	P 39P	B1 FUEL PUMP DISCH PRESS	1	1	5
-200	-	P 56P	S LOX PUMP INLET PRESS	1	1	5
-205	-	P 59P	B2 THRUST CHAMBER PRESS	1	1	5
-210	-	P 60P	B1 THRUST CHAMBER PRESS	1	1	5
-215	-	P 330P	S FUEL PUMP DISCH PRESS	1	1	5
-220	-	P 337P	S GG LOX INJ MAN PRESS		1	5
-225	-	P 351P	S LOX INJ MAN PRESS		1	5
-230	-	P 463P	S GG FUEL INJ MAN PRESS		1	5
-235	-	P 474P	VERNIER CTL PRESS REG OUT	1	1	5
-240	-	P 709T	S GG COMBUSTOR TEMP	1	1	5
-245	-	P 713T	B1 GAS GEN COMBUSTOR TEMP	1	1	5
-250	-	P 714T	B2 GAS GEN COMBUSTOR TEMP		1	5

OSTF-2 OBJ COMPOSITE 26 SEP 62 AE60-0653			123	123456	1234	123456	1	12345	044
-255	-	S 241X SUS CUTOFF DISCRETE				1			5
-260	-	S 373X BOOSTER CUTOFF				1			5
-265	-	S 376X VERNIER CUTOFF				1			5
-270	-	U 101A AXIAL ACCELN-STA 910			1	1			5
-275	-	U 80P LOX TANK HEAD PRESS			1	1			5
-280	-	U 81P FUEL TANK HEAD PRESS			1	1			5
-286	-	M7604M FWD LIFTOFF CAMERA			1	1			5
-287	-	M7605N AFT LIFTOFF CAMERA				1			5
000	037-04-	SHUTOFF VALVE EFFECT			1	1			2
-015	-	M 606N STAGING RCP Q4			1	1			5
-020	-	M 185X STAGING CAMERA BKW			1				5
-021	-	M 189X RCP 1 PLUG DISCON				1			5
000	037-05-	THRUST SECTION CONDITIONS.			1	1			2
-012	-	A 743T AMB @ SUS INSTR PANEL				1			5
-015	-	A 778T ENG COMPT AMB TEMP			1	1			5
-030	-	M 32X COMAX VALVE COMMAND			1	1			5
-035	-	M 185X STAGING CAMERA BKW			1				5
-036	-	M 189X RCP 1 PLUG DISCON				1			5
-040	-	U 101A AXIAL ACCELN-STA 910			1	1			5
-050	-	M 606N STAGING RCP Q4			1	1			5
000	038-01-	RANGE. TRAJECTORY & CEP			1	1			2
000	038-02-	AIRFRAME ADEQUACY			1	1			2
-012	-	A 743T AMB @ SUS INSTR PANEL				1			5
-015	-	A 778T ENG COMP AMB TEMP			1	1			5
-020	-	F 1P LOX TANK HE PRESS			1	1			5
-025	-	F 3P FUEL TANK HE PRESS			1	1			5
-035	-	M 185X STAGING CAMERA BKW			1				5
-036	-	M 189X RCP 1 PLUG DISCON				1			5
-040	-	U 101A AXIAL ACCELN-STA 910			1	1			5
-050	-	A1780Y GUID POD ACOUSTIC			1	1			5
-060	-	M 606N STAGING RCP Q4			1	1			5

OSTF-2 OBJ COMPOSITE 26 SEP 62 AE60-0653 123 123456 1234 123456 1 12345 045

000	038-03-	ELEC SYS PERF			1	1	2
-015	-	E 50Q	400 CPS AC PWR SUPPLY		1	1	5
-020	-	E 51V	400 CPS AC PHASE A VOLT		1	1	5
-025	-	E 28V	MSL SYS INPUT VOLT		1	1	5
000	038-04-	FLIGHT CTL SYS PERF			1	1	2
-015	-	S 61D	ROLL DISPL GYRO SIG		1	1	5
-020	-	S 62D	PITCH DISPL GYRO SIG		1	1	5
-025	-	S 63D	YAW DISPL GYRO SIG		1	1	5
-030	-	S 203D	B1 PITCH/ROLL POS		1	1	5
-035	-	S 204D	B2 PITCH/ROLL POS		1	1	5
-040	-	S 205D	B1 YAW POS		1	1	5
-045	-	S 206D	B2 YAW POS		1	1	5
-050	-	S 222D	V1 PITCH POS		1	1	5
-055	-	S 223D	V2 PITCH POS		1	1	5
-060	-	S 233D	V1 YAW/ROLL POS		1	1	5
-065	-	S 234D	V2 YAW/ROLL POS		1	1	5
-070	-	S 256D	SUS YAW POS		1	1	5
-075	-	S 257D	SUS PITCH POS		1	1	5
-080	-	S 52R	ROLL RATE GYRO SIG		1	1	5
-085	-	S 53R	PITCH RATE GYRO SIG		1	1	5
-090	-	S 54R	YAW RATE GYRO SIG		1	1	5
-091	-	S 241X	SUS CUTOFF DISCRETE			1	5
-092	-	S 248X	A/P PROGRAMMER SW 17			1	5
-093	-	S 373X	BOOSTER CUTOFF			1	5
-094	-	S 376X	VERNIER CUTOFF			1	5
-095	-	S 379X	FIRE RETROROCKETS			1	5
-096	-	M 32X	CONAX VALVE COMMAND		1	1	5
-100	-	I 570X	STAGING SIG		1	1	5
-105	-	I 522X	SUS ENG CUTOFF SIG		1	1	5
-110	-	I 521X	VERNIER ENG CUTOFF SIG		1	1	5
-115	-	I 527X	PRE-ARM RELAY CLSD		1	1	5
-120	-	I 528V	YAW STEERING SIG		1	1	5
-125	-	I 530V	PITCH RESOLVER SIG		1	1	5
-130	-	I 580V	AZM RESOLVER SIG		1	1	5

```
DSTF-2 OBJ COMPOSITE 26 SEP 62    AE60-0653          123 123456 1234 123456 1 12345                 46

 000  038-05-  GUIDANCE SYS PERF                                  1      1                          2
-015        -  I 552D  REDNDT GYRO PICKOFF                        1      1                          5
-020        -  I 505H  COMPUTER POS X                             1      1                          5
-025        -  I 506H  COMPUTER POS Y                             1      1                          5
-030        -  I 507H  COMPUTER POS Z                             1      1                          5
-035        -  I 508H  RANGE ERROR FUNCTION                       1      1                          5
-040        -  I 509H  AZM ERROR FUNCTION                         1      1                          5
-045        -  I 502L  COMPUTER VEL X                             1      1                          5
-050        -  I 503L  COMPUTER VEL Y                             1      1                          5
-055        -  I 504L  COMPUTER VEL Z                             1      1                          5
-060        -  I 528V  YAW STEERING SIG                           1      1                          5
-065        -  I 529V  ROLL RESOLVER SIG                          1      1                          5
-070        -  I 530V  PITCH RESOLVER SIG                         1      1                          5
-075        -  I 580V  AZM RESOLVER SIG                           1      1                          5
-080        -  I 510W  ELAPSED TIME                               1      1                          5
-085        -  I 581W  TIME T                                     1      1                          5
-090        -  I 521X  VERNIER ENG CUTOFF SIG                     1      1                          5
-095        -  I 522X  SUS ENG CUTOFF SIG                         1      1                          5
-100        -  I 527X  PRE-ARM RELAY CLSD                         1      1                          5
-105        -  I 570X  STAGING SIG                                1      1                          5
-115        -  A1780Y  GUID POD ACOUSTIC                          1      1                          5

 000  038-06-  HYD SYS PERF                                       1      1                          2
-015        -  H  33P  B1 HYD ACCUM PRESS                         1      1                          5
-020        -  H 140P  VERNIER HYD PRESS                          1      1                          5
-025        -  H 185P  SUS HYD PUMP INLET PRESS                   1      1                          5
-026        -  H 224P  B HYD SYS LO PRESS                                1                          5

 000  038-07-  PNEU SYS PERF                                      1      1                          2
-015        -  F   1P  LOX TANK HE PRESS                          1      1                          5
-020        -  F   3P  FUEL TANK HE PRESS                         1      1                          5
-025        -  F 145P  S CTL HE BTL DISCH PRESS                   1      1                          5
-030        -  F 246P  B TK HE BTL HI PRESS                       1      1                          5
-031        -  F 247T  B TK HE BTL PRESS                                 1                          5
-040        -  F1290T  S CTL HE BTL TEMP                          1      1                          5
-045        -  F1145P  SUS CTL HE BTL DISCH PRESS                 1      1                          5
```

ᴐSTF-2 'EJ COMPOSITE 26 SEP 62	AE60-0653	123 123456 1234 123456 1 12345			047
-050	-	F1247T B TK HE BTL TEMP	1		5
000	038-08-	PU SYSTEM PERF	1	1	2
-012	-	P 529D SUS MAIN LOX VLV POS		1	5
-013	-	P 830D SUS FUEL VLV POS		1	5
-015	-	U 101A AXIAL ACCELN	1	1	5
-020	-	U 80P LOX TK HEAD PRESS	1	1	5
-025	-	U 81P FUEL TK HEAD PRESS	1	1	5
-030	-	U 113V AA VLV POS FB	1	1	5
-035	-	U 135X AA SENSORS SIG	1	1	5
-045	-	P1529D SUS MAIN LOX VLV POS	1		5
-050	-	P1830D SUS FUEL VLV POS	1		5
000	038-09-	PROPULSION SYS PERF	1	1	2
000	038-10-	IRSS & GERSIS PERF	1	1	2
-015	-	G 504C MOD III MAGNETRON		1	5
-020	-	G 582E MOD III RATE BCN RF OUT		1	5
-025	-	G 594V MOD III RATE BCN PH DET		1	5
-035	-	D 110X MSL DESTRUCT SIG	1	1	5
-040	-	D 160X MANUAL FUEL CUTOFF SIG	1	1	5
-045	-	D 161X AUTO FUEL CUTOFF SIG	1	1	5
000	038-11-	R/V PERF	1	1	2
-015	-	Y 1X SEPARATION SIG	1	1	5
000	038-12-	L/P-FLAME BUCKET -MSL INTERFACE	1	1	2
-040	-	L7601P HT SHIELD OUTSIDE PRESS 1		1	5
-045	-	L7602P HT SHIELD OUTSIDE PRESS 2		1	5
-050	-	L7013P FLAME DEFLECT AMB PRESS 1		1	5
-055	-	L7014P FLAME DEFLECT AMB PRESS 2		1	5
-060	-	L7015P FLAME DEFLECT AMB PRESS 3		1	5
-065	-	L7016P FLAME DEFLECT AMB PRESS 4		1	5
000	060-01-	COMPRESSOR PERFORMANCE	1		2

OSTF-2 OBJ COMPOSITE 26 SEP 62	AE60-0653	123	123456	1234	123456	1	12345	048
000	040-02- INSTRUMENT AIR SUPPLY			1				2
000	040-03- SILO OVERPRESSURE			1	1			2
-015	- N7230P CRIB AMB PRESS 1			1	1			5
-020	- N7231P CRIB A B PRESS 2			1	1			5
-025	- N7232P CRIB AMB PRESS 3			1	1			5
-030	- N7233P CRIB AMB PRESS 4			1	1			5
-035	- N7234P CRIB AMB PRESS 5			1	1			5
-040	- N7235P CRIB AMB PRESS 6			1	1			5
000	041-00- HOUSEKEEPING & CORROSION				222222		22222	2
000	042-00- SACS MAMS CHECKOUT				2		2	2
000	099-00- OPERATIONAL MEASUREMENTS							2
-020	- F7001P LOX TANK PRESSURE	111	11111	111	1 111		1 11	5
-025	- F7003P FUEL TANK PRESSURE	111	11111	111	1 111		1 11	5
-030	- F7005P FUEL TK PRESS DUCT @ PCU	111	11111	111	1 111		1 11	5
-035	- F7012P LOX TK PRESS DUCT @ PCU	111	11111	111	1 111		1 11	5
-040	- M7507P SYS HYD ACUM PRESS			111	1 111		1 11	5
-045	- M7529P L/P BRAKE PRESS			111	1 111		1 11	5
-050	- N7803B L/P DRIVE MOTOR SPEED			111	1 111		1 11	5
-055	- N7908D L/P DISPLACEMENT			111	1 111		1 11	5
-060	- N7804F DRIVE MOTOR TORQUE			111	1 111		1 11	5
-065	- N7747N TV CAMERA 1				1 111		1 11	5
-066	- N7748N TV CAMERA 2				1 111		1 11	5
-067	- N7749N TV CAMERA 3				1 111		1 11	5
-068	- N7750N TV CAMERA 4				1 111		1 11	5
-069	- N7751N TV CAMERA 5				1 111		1 11	5
-070	- N7752N TV CAMERA 6				1 111		1 11	5
-071	- N7753N TV CAMERA 7				1 111		1 11	5
-080	- P7549P LOX STOR TK ULLAGE PRESS		11111	111	1 111		1 11	5
-085	- P7564P LOX STOR TK-MSL DP		11111	111	1 111		1 11	5

```
OSTF-2 OBJ COMPOSITE 26 SEP 62    AE60-0653          123 123456 1234 123456 1 12345                    049

-090        -  P7709P  LOX TOP TK ULLAGE PRESS           11111  111  1 111    1 11                      5
```

This page intentionally left blank.

THIS MATERIAL CONTAINS INFORMATION AFFECTING THE NATIONAL DEFENSE OF THE UNITED STATES WITHIN THE MEANING OF THE ESPIONAGE LAWS, TITLE 18, U.S.C., SECTIONS 793 AND 794, THE TRANSMISSION OR REVELATION OF WHICH IN ANY MANNER TO AN UNAUTHORIZED PERSON IS PROHIBITED BY LAW

~~CONFIDENTIAL~~

SECTION 9

OBJECTIVE/INSTRUMENTATION COMPOSITE - OSTF #2

OBJECTIVE	TEST SERIES →	1			2		3			4	
This is a concise description of the test objective.	TEST BLOCK →	1	2	3	1	2	1	2	3	1	2
	COUNTDOWN →	1234	1234	1234							
030 TO ESTABLISH WEAPON SYSTEM REACTION TIME DURING FIRST READINESS CONDITION.	OBJECTIVE EFFECTIVITY →			XXXX	XX		X	X	X		

DATA REQUIREMENTS:

1. ESTABLISH NORMAL TIME TO PERFORM AN OPERATIONAL COUNTDOWN.

2. ESTABLISH NORMAL TIME FOR A SUBSYSTEM TO REACT WITHIN THE COUNTDOWN.

NON-METRIC DATA

NOT REQUIRED

METRIC DATA

N7051X	COM. STA. 1	ON-OFF	1111	11	1	1	1
N7052X	COM. STA. 2	ON-OFF	1111	11	1	1	1

MEASUREMENT NUMBER

MEASUREMENT DESCRIPTION

This is a brief, usually abbreviated description of the measurement. *

MEASUREMENT PRIORITY

These numbers indicate measurement effectivity and relative importance.

NOTE: For a more detailed explanation of this format and a key to the abbreviations and coding see the Appendix of this report.

BLANK PAGE

OSTF 2 REC ASSIGNMNT 26 SEP 62 AE60-0653 123 123456 1234 123456 1 12345 001

-

- NOTE. /1/ 7000 SERIES MEAS. NUMBERS INDICATE LANDLINE MEASUREMENTS.

- /2/ 1000 SERIES MEAS NUMBERS INDICATE TRAILING WIRE MEASUREMENTS.

-

- THE FOLLOWING SYMBOLS INDICATE THE CODE USED IN PREPARING THIS

- RECORDER ASSIGNMENT.

- B-DIGITAL RECORDER

- D-SANBORN RECORDER

- F-FM TAPE RECORDER

- L-CAMERA

- N-DYNAMICS LAB RECORDER

- O-OSCILLOGRAPH RECORDER

- P-PORTABLE RECORDER

- R-EA SEQUENCE RECORDER

- S-BROWN OR STRIP RECORDER

- T-SILO RECORDER

- V-VISUAL PANEL GAGE

	A7541A	ACCELN MSL X AXIS	E
001-09	A7541A	ACCELN MSL X AXIS	
	A7542A	ACCELN MSL Y AXIS	E
001-09	A7542A	ACCELN MSL Y AXIS	
	A7828D	MSL NOSE X AXIS DISPL	E
001-09	A7828D	MSL NOSE X AXIS DISPL	
	A7829D	MSL NOSE Y AXIS DISPL	E
001-09	A7829D	MSL NOSE Y AXIS DISPL	
	A12[illegible]7P	HT SHIELD DP AD 2	E
	A1217P	HT SHIELD DP QUAD 2	F
034-00	A1217P	HT SHIELD DP QUAD 2	B
037-01	A1217P	HT SHIELD DP QUAD 2	1
			1

```
OSTF 2 REC ASSIGNMNT 26 SEP 62     AE60-0653          123 123456 1234 123456 1 12345                    002

                A1218P  HT SHIFLD DP Y-Y AXIS                          F                                E
                A1218P  HT SHIELD DP Y-Y AXIS                          B
        034-00  A1218P  HT SHIELD DP Y-Y AXIS                          1
        037-01  A1218P  HT SHIELD DP Y-Y AXIS                          1

                A1219P  HT SHIELD DP QUAD 1                            F      F                         E
                A1219P  HT SHIELD DP QUAD 1                            B      B
        034-00  A1219P  HT SHIELD DP QUAD 1                            1      1
        037-01  A1219P  HT SHIELD DP QUAD 1                            1      1

                A1220P  HT SHIELD DP QUAD 3                            F      F                         E
                A1220P  HT SHIELD DP QUAD 3                            B      B
        034-00  A1220P  HT SHIELD DP QUAD 3                            1      1
        037-01  A1220P  HT SHIELD DP QUAD 3                            1      1

                A1585P  HT SHIELD INSIDE PRESS 1                       F      F                         E
        034-00  A1585P  HT SHIELD INSIDE PRESS 1                              1
        037-01  A1585P  HT SHIELD INSIDE PRESS 1                       1      1

                A1586P  HT SHIELD INSIDE PRESS 2                       F      F                         E
        034-00  A1586P  HT SHIELD INSIDE PRESS 2                              1
        037-01  A1586P  HT SHIELD INSIDE PRESS 2                       1      1

                A1194T  HT SHIELD TEMP FWD Q4                          F      F                         E
        034-00  A1194T  HT SHIELD TEMP FWD Q4                          1      1
        037-01  A1194T  HT SHIELD TEMP FWD Q4                          1      1

                A1195T  HT SHIELD TEMP FWD Q2                          F      F                         E
                A1195T  HT SHIELD TEMP FWD Q2                          B      B
        034-00  A1195T  HT SHIELD TEMP FWD Q2                          1      1
        037-01  A1195T  HT SHIELD TEMP FWD Q2                          1      1

                A7901T  ROT INV SKIN                  BB                                                E
        003-01  A7901T  ROTARY INV SKIN TEMP          11

                A7902T  ARMA PLAT SKIN FWD            BBB BBBBBB                                        E
        003-12  A7902T  ARMA PLAT SKIN TEMP FWD       222  22222
        003-24  A7902T  ARMA PLAT SKIN TEMP FWD            22
        005-01  A7902T  ARMA PLAT SKIN TEMP FWD           2

                A7903T  ARMA PLAT SKIN AFT            BBB BBBBBB                                        E
        003-12  A7903T  ARMA PLAT SKIN TEMP AFT       222  22222
        003-24  A7903T  ARMA PLAT SKIN TEMP AFT            22
        005-01  A7903T  ARMA PLAT SKIN TEMP AFT           2

                A7904T  ARMA CONTROL SKIN             BBB BBBBBB                                        E
        003-12  A7904T  ARMA CONTROL SKIN TEMP        222  22222
        003-24  A7904T  ARMA CONTROL SKIN TEMP             22
        005-01  A7904T  ARMA CONTROL SKIN TEMP            2

                A7905T  TLM XMTR SKIN                 BB                                                E
        003-01  A7905T  TLM XMTR SKIN TEMP            11

                A7906T  ROTARY INV AMB AIR            BB                                                E
        003-01  A7906T  ROTARY INV AMB AIR TEMP        11

                A7907T  ARMA PLAT AMB AIR             BB B                                              E
```

```
OSTF 2 REC ASSIGNMNT 26 SEP 62    AE60-0653          123 123456 1234 123456 1 12345                    003

     003-01   A7907T  ARMA PLAT AMB AIR TEMP          11
     005-01   A7907T  ARMA PLAT AMB AIR TEMP             2

              A7908T  ARMA CONT AMB AIR               BB                                                E
     003-01   A7908T  ARMA COMPT AMB AIR TEMP         11

              A7909T  TLM XMTR AMB AIR                BB                                                E
     003-01   A7909T  TLM XMTR AMB AIR TEMP           11

              A7911T  B2 POD INLET AIR                BB                                                E
     003-01   A7911T  B2 POD INLET AIR TEMP           11

              A7912T  AIG POD INNER SKIN              BBB BBBBBB                                        E
     003-12   A7912T  AIG POD INNER SKIN TEMP        222  22222
     003-24   A7912T  AIG POD INNER SKIN TEMP             22
     005-01   A7912T  AIG POD INNER SKIN TEMP            2

              A1780Y  ARMA POD ACOUSTIC                              N      N
     034-00   A1780Y  ARMA POD ACOUSTIC                              1      1
     037-02   A1780Y  ARMA POD ACOUSTIC                              1      1
     038-02   A1780Y  GUID POD ACOUSTIC                              1      1
     038-05   A1780Y  GUID POD ACOUSTIC                              1      1

              E7003V  28 VDC GND VOLTAGE                                                                E
     001-14   E7003V  28 VDC GND VOLTAGE

              F7001P  LOX TANK PRESSURE               SSS  SSSSS  SSS  S SSS    S SS                    E
              F7001P  LOX TANK PRESSURE               BBB  BBBBB  BBB  B BBB    B BB

     001-03   F7001P  LOX TANK PRESSURE                1
     003-02   F7001P  LOX TANK PRESSURE               111         111  1 111    1 11
     003-03   F7001P  LOX TANK PRESSURE               111
     003-04   F7001P  LOX TANK PRESSURE
     007-01   F7001P  LOX TANK PRESSURE                          111  1 111    1 11
     007-05   F7001P  LOX TANK PRESSURE                    111   111  1 111    1 11
     007-06   F7001P  LOX TANK PRESSURE                    11    111  1 111    1 11
     010-01   F7001P  LOX TANK PRESSURE                    11111 111  1 111    1 11
     010-03   F7001P  LOX TANK PRESSURE                    11111 111  1 111    1 11
     010-04   F7001P  LOX TANK PRESSURE                    11111 111  1 111    1 11
     010-06   F7001P  LOX TANK PRESSURE                    11111
     010-07   F7001P  LOX TANK PRESS                       11111
     024-     F7001P  LOX TANK PRESSURE                                1 1      1 1
     099-00   F7001P  LOX TANK PRESSURE               111  11111 111  1 111    1 11

              F7003P  FUEL TANK PRESSURE              SSS  SSSSS  SSS  S SSS    S SS                    E
              F7003P  FUEL TANK PRESSURE              BBB  BBBBB  BBB  B BBB    B BB
     003-02   F7003P  FUEL TANK PRESSURE              111         111  1 111    1 11
     003-03   F7003P  FUEL TANK PRESSURE              111
     003-04   F7003P  FUEL TANK PRESSURE
     007-01   F7003P  FUEL TANK PRESSURE                          111  1 111    1 11
     007-05   F7003P  FUEL TANK PRESSURE                    111   111  1 111    1 11
     007-06   F7003P  FUEL TANK PRESSURE                    11    111  1 111    1 11
     011-01   F7003P  FUEL TANK PRESSURE
     011-02   F7003P  FUEL TANK PRESS
     011-04   F7003P  FUEL TANK PRESSURE
     011-06   F7003P  FUEL TANK PRESSURE
     024-     F7003P  FUEL TANK PRESSURE                                1 1      1 1
     099-00   F7003P  FUEL TANK PRESSURE              111  11111 111  1 111    1 11

              F7005P  FUL TK PRES DUCT PCU            FFF  SSSSS  SSS  S SSS    S SS                    E
              F7005P  FUL TK PRES DUCT PCU                 BBBBB  BBB  B BBB    B BB
     003-02   F7005P  FUEL TK PRESS DUCT @ PCU        111         111  1 111    1 11
```

```
)STF 2 REC ASSIGNMNT 26 SEP 62    AE60-0653          123 123456 1234 123456 1 12345                  004

     024-     F7005P  FUEL TK PRESS DUCT @ PCU                        1 1      1 1
     099-00   F7005P  FUEL TK PRESS DUCT @ PCU      111  11111  111  1 111    1 11

              F7006P  FUL TK PRES DUCT ROD          FFF                                                E
     003-02   F7006P  FUEL TK PRESS DUCT @ R-O-D    111

              F7012P  LOX TK PRES DUCT PCU          FFF  SSSSS  SSS  S SSS    S SS                     E
              F7012P  LOX TK PRES DUCT PCU              BBBBB  BBB  B BBB    B BB
     003-02   F7012P  LOX TK PRESS DUCT @ PCU       111         111  1 111    1 11
     024-     F7012P  LOX TK PRESS DUCT @ PCU                         1 1      1 1
     099-00   F7012P  LOX TK PRESS DUCT @ PCU       111  11111  111  1 111    1 11

              F7013P  LOX TK PRES DUCT ROD          FFF                                                E
     003-02   F7013P  LOX TK PRESS DUCT @ R-O-D     111

              F7020P  LN2 P @ ROD                   FFF                                                E
     003-09   F7020P  LN2 PRESS @ R-O-D             111

              F1145P  S CTL HE BTL DISCH PRESS                  SSS  S SSS    S S                      E
              F1145P  S CTL HE BTL DISCH PRESS                  FFF  F FFF    F F
     007-01   F1145P  S CTL HE BTL DISCH PRESS                  111  1 111
     024-     F1145P  S CTL HE BTL DISCH PRESS                       1 1      1 1
     034-00   F1145P  SUS CTL HE BTL OUT PRESS                    1      1
     038-07   F1145P  SUS CTL HE BTL DISCH PRESS                  1      1

              F7246P  B TANK HE BOTTLES HI          SSS                                                E
     003-04   F7246P  B TK HE BTL HI PRESS          111

              F7567P  FUEL LVL TK ULLAGE PRESS                                                         E
     011-02   F7567P  FUEL LVL TK ULLAGE PRESS

              F7713P  A/B LN2 SHROUD                FFF                                                E
     003-09   F7713P  A/B LN2 SHROUD PRESS          111

              F7716P  GND HT XGR HE IN              FFF                                                E
     003-09   F7716P  GND HT XCHGR HE IN PRESS      111

              F7717P  GND HT XGR HE OUT             FFF                                                E
     003-04   F7717P  GND HT XCHGR HE OUT PRESS
     003-09   F7717P  GND HT XCHGR HE OUT PRESS     111

              F7720P  LN2 STOR XFER P               FFF                                                E
     003-09   F7720P  LN2 STOR TK XFER PRESS        111

              F7723P  HE SUPPLY #1 @ PDU            SSS                                                E
     003-02   F7723P  HE SUPPLY 1 @ PDU             111
     003-03   F7723P  HE SUPPLY 1 @ PDU             111
     003-04   F7723P  HE SUPPLY 1 @ PDU

              F7724P  HE SUPPLY #2 @ PDU            SSS                                                E
     003-02   F7724P  HE SUPPLY 2 @ PDU             111
     003-03   F7724P  HE SUPPLY 2 @ PDU             111
     003-04   F7724P  HE SUPPLY 2 @ PDU

              F7725P  GN2 SUPPLY @ PDU              FFF                                                E
     003-02   F7725P  GN2 SUPPLY PRESS @ PDU        111
```

```
OSTF 2 REC ASSIGNMNT 26 SEP 62     AE60-0653          123 123456 1234 123456 1 12345                    005

                                                                                                          C
          F7727P  REGULATED INST AIR                  FFF
003-02    F7727P  REGULATED INST AIR PRESS            111
003-05    F7727P  REGULATED INST AIR PRESS            111

          F7731P  HE SUPPLY 2 @ TEST PT E                      B                                        E
          F7731P  HE SUPPLY 2 @ TEST PT E                      F
003-02    F7731P  HE SUPPLY 2 @ TEST PT E                      1

                                                                                                          E
          F7735P  HE SUP TO MSL @ HCU
003-04    F7735P  HE SUP TO MSL PRESS @ HCU

                                                                                                          E
          F7911P  FUEL PRESN TK DISCH PRESS
011-02    F7911P  FUEL PRESN TK DISCH PRESS

                                                                                                          E
          F7719R  STORAGE TANK LN2 OUT                FFF
003-09    F7719R  LN2 STOR TK OUT FL/RT               111

                                                                                                          E
          F7017T  FUEL TK PRES DUCT                   FFF
003-02    F7017T  FUEL TK PRESS DUCT TEMP             111

                                                                                                          E
          F7018T  LOX TK PRES DUCT                    FFF
003-02    F7018T  LOX TK PRESS DUCT TEMP              111

                                                                                                          E
          F1247T  B TK HE BTL TEMP                             FFF
007-01    F1247T  B TK HE BTL TEMP                             111
034-00    F1247T  B TK HE BTL TEMP                               1
038-07    F1247T  B TK HE BTL TEMP                               1

                                                                                                          E
          F7248T  HE TEMP HI 4 BTL                    FFF
003-04    F7248T  HE TEMP HI 4 BTL                    111
003-09    F7248T  HE TEMP HI 4 BTL                    111

                                                                                                          E
          F7249T  HE TEMP LO 4 BTL                    FFF
003-04    F7249T  HE TEMP LO 4 BTL                    111
003-09    F7249T  HE TEMP LO 4 BTL                    111

                                                                                                          E
          F7250T  HE TEMP LO 2 BTL                    FFF
003-04    F7250T  HE TEMP LO 2 BTL                    111
003-09    F7250T  HE TEMP LO 2 BTL                    111

                                                                                                          E
          F1290T  S CTL HE BOTTLE TEMP                         FFF  F FFF
          F1290T  S CTL HE BOTTLE TEMP                         888  8 888
007-01    F1290T  S CTL HE BOTTLE TEMP                         111  1 111
034-00    F1290T  SUS CTL HE BTL TEMP                            1      1
038-07    F1290T  S CTL HE BTL TEMP                              1      1

                                                                                                          E
          F7714T  GND HT XGR HE IN                    FFF
003-09    F7714T  GND HT XCHGR HE IN PRESS            111

                                                                                                          E
          F7715T  GND HT XGR HE OUT                   FFF
003-09    F7715T  GND HT XCHGR HE OUT PRESS           111

                                                                                                          E
          F7736T  HE SUP TO MSL @ HCU
003-04    F7736T  HE SUP TO MSL TEMP @ HCU

                                                                                                          E
          F7738T  FUL TK HE SENS @ HCU
```

```
OSTF 2 REC ASSIGNMNT 26 SEP 62    AE60-0653          123 123456 1234 123456 1 12345                    006

     003-04   F7738T  FUEL TK HE SENS LINE TEMP

              F7745T  HE SUP TO MSL @ ROD          FFF                                                  E
     003-09   F7745T  HE SUP TO MSL TEMP @ R-O-D   111

              H7987D  HI DOOR POSITION                                D DDD                            E
     001-07   H7987D  UPPER DOOR POSITION                             1 111

              H7988D  LO DOOR POSITION                                D DDD                            E
     001-07   H7988D  LOWER DOOR POSITION                             1 111

              H7507P  SYSTEMS HYD ACUM                          DDD   D FFF     F FF                     E
     001-08   H7507P  SYS HYD ACUM PRESS                        111   1 111     1 11
     001-09   H7507P  SYS HYD ACUM PRESS                        111   1 111     1 11
     024-     H7507P  SYS HYD ACUM PRESS                              1 1       1 1
     099-00   H7507P  SYS HYD ACUM PRESS                        111   1 111     1 11

              H7508P  UPPER DOOR HYD ACUM                       DDD   D FFF     F F                      E
     001-07   H7508P  UPR DOOR HYD ACUM PRESS                   111   1 111
     024-     H7508P  UPR DR HYD ACUM PRESS                           1 1       1 1

              H7509P  LOWER DOOR HYD ACUM                       DDD   D FFF     F F                      E
     001-07   H7509P  LWR DOOR HYD ACUM PRESS                   111   1 111
     024-     H7509P  LWR DR HYD ACUM PRESS                           1 1       1 1

              H7515P  HOR CRIB LK CYL HD                              F FFF                            E
     001-08   H7515P  HORIZ CRIB LK HD PRESS                          1 111

              H7516P  L/P LOCK-LOCKING                                F FFF                            E
     001-09   H7516P  L/P LOCK-LOCKING PRESS
     001-10   H7516P  L/P LOCK-LOCKING PRESSURE                       1 111

              H7527P  WGE LKS LOCK ROD END                            F FFF                            E
     001-09   H7527P  WEDGE LKS CYL ROD PRESS
     001-10   H7527P  WEDGE LKS CYL ROD PRESS                         1 111

              H7528P  WEDGE LK LKN CYL END                            F FFF                            E
     001-09   H7528P  WEDGE LKS CYL HD PRESS
     001-10   H7528P  WEDGE LKS CYL HD PRESS                          1 111

              H7529P  L/P BRAKE                                 DDD   D SSS     S SS                     E
     001-10   H7529P  L/P BRAKE PRESS                           111   1 111     1 11
     024-     H7529P  L/P BRAKE PRESS                                 1 1       1 1
     099-00   H7529P  L/P BRAKE PRESS                           111   1 111     1 11

              H7969P  CRIB LOCKS VERT                                 F FFF                            E
     001-08   H7969P  VERT CRIB LKS PRESS                             1 111

              H7975P  LWR DOOR CYL ROD END                            F FFF                            E
     001-07   H7975P  LWR DOOR CYL ROD PRESS                          1 111

              H7976P  L/P LOCK-UNLOCKING                              F FFF                            E
     001-09   H7976P  L/P LOCK-UNLOCKING PRESS
     001-10   H7976P  L/P LOCK-UNLOCKING PRESS                        1 111

              H7981P  UPR DOOR CYL HD END                             F FFF                            E
```

```
OSTF 2 REC ASSIGNMNT 26 SEP 62    AE60-0653          123 123456 1234 123456 1 12343                007

     001-07   H7981P  UPR DOOR CYL HD PRESS                          1 111

              H7982P  LWR DOOR CYL HD END                            F FFF                          E
     001-07   H7982P  LWR DOOR CYL HD PRESS                          1 111

              H7986P  UPR DOOR CYL ROD END                           F FFF                          E
     001-07   H7986P  UPR DOOR CYL ROD PRESS                         1 111

              H7181T  HYD FLUID S PCH ACTR          F                                                E
     001-02   H7181T  HYD FLUID SUS PITCH ACTR      1

              H7182T  HYD FLUID S YAW ACTR          F                                                E
     001-02   H7182T  HYD FLUID SUS YAW ACTR        1

              H7531T  BOOSTER SYSTEM OIL            F                                                E
     001-02   H7531T  BOOSTER SYSTEM OIL            1

              H7532T  SUS SYSTEM OIL                F                                                E
     001-02   H7532T  SUS SYSTEM OIL                1

              H7190X  HOR CRIB LKS RET              RR          RRR  R RRR    R RR
     001-08   H7190X  HORIZ CRIB LK 2 NOT EXT       11          111  1 111    1 11

              H7191X  HOR CRIB LKS EXT              RR          RRR  R RRR    R RR
     001-08   H7191X  HORIZ CRIB LK 2 RETR          11          111  1 111    1 11

              H7192X  VER LKS EXT                   RR          RRR  R RRR    R RR
     001-08   H7192X  VERT CRIB LK 2 RETR           11          111  1 111    1 11

              H7193X  VER LKS RET                   RR          RRR  R RRR    R RR
     001-08   H7193X  VERT CRIB LK 2 EXT            11          111  1 111    1 11

              H7194X  L/P WEDGE LKS PRESS           RR          RRR  R RRR    R RR
     001-09   H7194X  L/P WEDGE LK 3 EXT
     001-10   H7194X  L/P WEDGE LK 3 EXT            11          111  1 111    1 11

              H7195X  L/P WEDGE LKS RET             RR          RRR  R RRR    R RR
     001-09   H7195X  L/P WEDGE LK 3 NOT RETR
     001-10   H7195X  L/P WEDGE LK 3 NOT RETR       11          111  1 111    1 11

              H7196X  L/P MAIN LKS PRESS            RR          RRR  R RRR    R RR
     001-09   H7196X  L/P MAIN LK 3 NOT EXT
     001-10   H7196X  L/P MAIN LK 3 NOT EXT         11          111  1 111    1 11

              H7197X  L/P MAIN LKS RET              RR          RRR  R RRR    R RR
     001-09   H7197X  L/P MAIN LK 3 RETR
     001-10   H7197X  L/P MAIN LK 3 RET             11          111  1 111    1 11

              H7198X  WED LKS CTL VLV CLSD          RR          RRR  R RRR    R RR
     001-09   H7198X  EXT WEDGE LKS SIG
     001-10   H7198X  EXT WEDGE LKS SIG             11          111  1 111    1 11

              H7199X  WED LKS CTL VLV OPN           RR          RRR  R RRR    R RR
     001-09   H7199X  RETR WEDGE LKS SIG
     001-10   H7199X  RETR WEDGE LKS SIG            11          111  1 111    1 11
```

```
OSTF 2 REC ASSIGNMNT 26 SEP 62     AE60-0653          123 123456 1234 123456 1 12345                    008

            H7200X  MAIN LKS CTL VLV CLS          RR          RRR  R RRR    R RR
001-09      H7200X  EXT MAIN LKS SIG
001-10      H7200X  EXT MAIN LKS SIG              11          111  1 111    1 11

            H7201X  MAIN LKS CTL VLV OPN          RR          RRR  R RRR    R RR
001-09      H7201X  RETR MAIN LKS SIG
001-10      H7201X  RETR MAIN LKS SIG             11          111  1 111    1 11

            H7202X  HOR LKS CTL VLV CLS           RR          RRR  R RRR    R RR
001-08      H7202X  EXTEND HORIZ LKS SIG          11          111  1 111    1 11

            H7203X  HOR LKS CTL VLV OPN           RR          RRR  R RRR    R RR
001-08      H7203X  RETR HORIZ LKS SIG            11          111  1 111    1 11

            H7805X  UPR DR CTL VLV OPEN           RR          RRR  R RRR    R RR
001-07      H7805X  OPEN UPR DOOR SIG             11          111  1 111    1 11

            H7806X  LWR DR CTL VLV OPEN           RR          RRR  R RRR    R RR
001-07      H7806X  OPEN LWR DOOR SIG             11          111  1 111    1 11

            H7807X  L/P LOCK ASSY OPEN            RR  R       RRR  R RRR    R RR
001-09      H7807X  L/P LK ASSY /RETRACT/ OPEN
001-10      H7807X  L/P LK ASSY /RETRACT/ OPEN    11          111  1 111    1 11
005-01      H7807X  L/P LOCK ASSY OPEN                2       2    2 2

            H7809X  VER LK CTL VLV OPEN           RR          RRR  R RRR    R RR
001-08      H7809X  RETR VERT LKS SIG             11          111  1 111    1 11

            H7810X  UPR DR CTL VLV CLOSE          RR          RRR  R RRR    R RR
001-07      H7810X  CLOSE UPR DOOR SIG            11          111  1 111    1 11

            H7811X  LWR DR CTL VLV CLOSE          RR          RRR  R RRR    R RR
001-07      H7811X  CLOSE LWR DOOR SIG            11          111  1 111    1 11

            H7812X  L/P LOCK ASSY CLOSE           RR  R       RRR  R RRR    R RR
001-09      H7812X  L/P LK ASSY /EXTEND/ CLSD
001-10      H7812X  L/P LK ASSY /EXTEND/ CLSD     11          111  1 111    1 11
005-01      H7812X  L/P LOCK ASSY CLSD                2       2    2 2

            H7813X  SOL 1 L/P BK CTL VLV          RR
001-10      H7813X  SOL 1 L/P BK CTL VLV          11

            H7816X  VER LK CTL VLV CLOSE          RR          RRR  R RRR    R RR
001-08      H7816X  EXTEND VERT LKS SIG           11          111  1 111    1 11

            H7972X  PRESS SW RETURN               RR          RRR  R RRR    R RR
001-10      H7972X  PRESS SWITCH RETURN           11          111  1 111    1 11

            I7515A  ACCELEROMETER XF1             FFF FFFFFF  FFF  F FFF    F                    E
003-12      I7515A  ACCELEROMETER XF1             111  11111  111  1 111
003-24      I7515A  ACCELEROMETER XF1                  11          1 1      1
005-01      I7515A  ACCELEROMETER XF1                 2       2    2 2

            I7516A  ACCELEROMETER YF1             FFF FFFFFF  FFF  F FFF    F                    E
003-12      I7516A  ACCELEROMETER YF1             111  11111  111  1 111
003-24      I7516A  ACCELEROMETER YF1                  11          1 1      1
```

```
OSTF 2 REC ASSIGNMNT 26 SEP 62    AE60-0653          123 123456 1234 123456 1 12345                    009

     005-01   I7516A  ACCELEROMETER YF1                 2       2    2 2

              I7517A  ACCELEROMETER Z61          FFF FFFFFF  FFF  F FFF    F                          E
     003-12   I7517A  ACCELEROMETER ZF1          111  11111  111  1 111
     003-24   I7517A  ACCELEROMETER ZF1                 11          1 1      1
     005-01   I7517A  ACCELEROMETER ZF1                2       2    2 2

              I7518A  ACCELEROMETER XF2          FFF FFFFFF  FFF  F FFF    F                          E
     003-12   I7518A  ACCELEROMETER XF2          111  11111  111  1 111
     003-24   I7518A  ACCELEROMETER XF2                 11          1 1      1
     005-01   I7518A  ACCELEROMETER XF2                2       2    2 2

              I7519A  ACCELEROMETER YF2          FFF FFFFFF  FFF  F FFF    F                          E
     003-12   I7519A  ACCELEROMETER YF2          111  11111  111  1 111
     003-24   I7519A  ACCELEROMETER YF2                 11          1 1      1
     005-01   I7519A  ACCELEROMETER YF2                2       2    2 2

              I7520A  ACCELEROMETER ZF2          FFF FFFFFF  FFF  F FFF    F                          E
     003-12   I7520A  ACCELEROMETER ZF2          111  11111  111  1 111
     003-24   I7520A  ACCELEROMETER ZF2                 11          1 1      1
     005-01   I7520A  ACCELEROMETER ZF2                2       2    2 2

              I7591C  PITCH GYRO TORQUE          FFF FFFFFF                                            E
     003-12   I7591C  PITCH GYRO TORQUE          222  22222
     003-24   I7591C  PITCH GYRO TORQUE                 22
     005-01   I7591C  PITCH GYRO TORQUE                2

              I7592C  ROLL GYRO TORQUE           DDD DDDDDD  DDD  D DDD    D                          E
     003-12   I7592C  ROLL GYRO TORQUE           222  22222  222  2 211
     003-24   I7592C  ROLL GYRO TORQUE                 22          2 2      2
     005-01   I7592C  ROLL GYRO TORQUE                2       2    2 2

              I7593C  YAW GYRO TORQUE            DDD DDDDDD  DDD  D DDD    D                          E
     003-12   I7593C  YAW GYRO TORQUE            222  22222  222  2 222
     003-24   I7593C  YAW GYRO TORQUE                 22          2 2      2
     005-01   I7593C  YAW GYRO TORQUE                2       2    2 2

              I7501D  OPTICAL AZM SIGNAL         DDD DDDDDD  DDD  D DDD    D                          E
     003-12   I7501D  OPTICAL AZIMUTH SIG        111  11111  111  1 111
     003-24   I7501D  OPTICAL AZIMUTH SIG                11          1 1      1
     005-01   I7501D  OPTICAL AZIMUTH SIGNAL            2       2    2 2

              I7511D  ROLL PENDULUM              DDD DDDDDD  DDD  D DDD    D                          E
     003-12   I7511D  ROLL PENDULUM              111  11111  111  1 111
     003-24   I7511D  ROLL PENDULUM                     11          1 1      1
     005-01   I7511D  ROLL PENDULUM                    2       2    2 2

              I7512D  PITCH PENDULUM             DDD DDDDDD  DDD  D DDD    D                          E
     003-12   I7512D  PITCH PENDULUM             111  11111  111  1 111
     003-24   I7512D  PITCH PENDULUM                     11          1 1      1
     005-01   I7512D  PITCH PENDULUM                    2       2    2 2

              I7549D  PITCH SERVO ERROR          DDD  DDDDD  DDD  D DDD    D                          E
     003-12   I7549D  PITCH SERVO ERROR          222  22222  222  2 222
     003-24   I7549D  PITCH SERVO ERROR                 22          2 2      2

              I7550D  ROLL SERVO ERROR           FFF  FFFFF  FFF  F FFF    F                          E
     003-12   I7550D  ROLL SERVO ERROR           222  22222  222  2 222
```

```
OSTF 2 REC ASSIGNMNT 26 SEP 62    AE60-0653          123 123456 1234 123456 1 12345                    010

     003-24   I7550D  ROLL SERVO ERROR                    22          2 2      2

              I7551D  AZIMUTH SERVO ERROR           FFF  FFFFF  FFF  F FFF    F                         E
     003-12   I7551D  AZIMUTH SERVO ERROR           222  22222  222  2 222
     003-24   I7551D  AZIMUTH SERVO ERROR                22          2 2      2

              I7552D  REDNDT GYRO PICK-OFF          DDD  DDDDD  DDD  D DDD    D
              I7552D  REDNDT GYRO PICK-OFF          FFF  FFFFF  FFF  F FFF    F
     003-12   I7552D  REDNT GYRO PICK-OFF           111  11111  111  1 111
     003-24   I7552D  REDNT GYRO PICK-OFF                11          1 1      1

              I7572D  ROLL MEMORY                   DDD  DDDDD  DDD  D DDD    D                         E
     003-12   I7572D  ROLL MEMORY                   111  11111  111  1 111
     003-24   I7572D  ROLL MEMORY                        11          1 1      1

              I7573D  PITCH MEMORY                  DDD  DDDDD  DDD  D DDD    D                         E
     003-12   I7573D  PITCH MEMORY                  111  11111  111  1 111
     003-24   I7573D  PITCH MEMORY                       11          1 1      1

              I7574D  AZIMUTH MEMORY                DDD  DDDDD  DDD  D DDD    D                         E
     003-12   I7574D  AZIMUTH MEMORY                111  11111  111  1 111
     003-24   I7574D  AZIMUTH MEMORY                     11          1 1      1

              I7576D  ZERO LAG OUTPUT I             DDD  DDDDD  DDD  D DDD    D                         E
     003-12   I7576D  ZERO LAG OUTPUT               222  22222  222  2 222
     003-24   I7576D  ZERO LAG OUTPUT                    22          2 2      2

              I7505H  COMPUTER POSITION X           FFF FFFFFF FFFF FF FFF   FF
     003-12   I7505H  COMPUTER POSITION X           111  11111  111  1 111
     003-24   I7505H  COMPUTER POSITION X                11          1 1      1
     004-04   I7505H  COMPUTER POSITION X               1      1    1        1
     005-01   I7505H  COMPUTER POSITION X               2       2    2 2

              I7506H  COMPUTER POSITION Y           FFF FFFFFF FFFF FF FFF   FF
     003-12   I7506H  COMPUTER POSITION Y           111  11111  111  1 111
     003-24   I7506H  COMPUTER POSITION Y                11          1 1      1
     004-04   I7506H  COMPUTER POSITION Y               1      1    1        1
     005-01   I7506H  COMPUTER POSITION Y               2       2    2 2

              I7507H  COMPUTER POSITION Z           FFF FFFFFF FFFF FF FFF   FF
     003-12   I7507H  COMPUTER POSITION Z           111  11111  111  1 111
     003-24   I7507H  COMPUTER POSITION Z                11          1 1      1
     004-04   I7507H  COMPUTER POSITION Z               1      1    1        1
     005-01   I7507H  COMPUTER POSITION Z               2       2    2 2

              I7508H  RANGE ERROR FUNCTION          FFF FFFFFF FFFF FF FFF   FF
     003-12   I7508H  DOWN RANGE ERROR FUNCTION     111  11111  111  1 111
     003-24   I7508H  DOWN RANGE ERROR FUNCTION          11          1 1      1
     004-04   I7508H  RANGE ERROR FUNCTION              1      1    1        1
     005-01   I7508H  DOWN RANGE ERROR FUNCTION         2       2    2 2

              I7509H  AZM ERROR FUNCTION            FFF FFFFFF FFFF FF FFF   FF
     003-12   I7509H  CROSS RANGE ERROR FUNCTION    111  11111  111  1 111
     003-24   I7509H  CROSS RANGE ERROR FUNCTION         11          1 1      1
     004-04   I7509H  AZIMUTH ERROR FUNCTION            1      1    1        1
     005-01   I7509H  CROSS RANGE ERROR FUNCTION        2       2    2 2

              I7502L  COMPUTER VELOCITY X           FFF FFFFFF FFFF FF FFF   FF
```

```
OSTF 2 REC ASSIGNMNT 26 SEP 62    AE60-0653          123 123456 1234 123456 1 12345                    011

     003-12   I7502L  COMPUTER VELOCITY X          111  11111  111  1 111
     003-24   I7502L  COMPUTER VELOCITY X               11          1 1      1
     004-04   I7502L  COMPUTER VELOCITY X             1      1    1        1
     005-01   I7502L  COMPUTER VELOCITY X             2       2    2 2

              I7503L  COMPUTER VELOCITY Y          FFF FFFFFF FFFF FF FFF   FF
     003-12   I7503L  COMPUTER VELOCITY Y          111  11111  111  1 111
     003-24   I7303L  COMPUTER VELOCITY Y               11          1 1      1
     004-04   I7503L  COMPUTER VELOCITY Y             1      1    1        1
     005-01   I7503L  COMPUTER VELOCITY Y             2       2    2 2

              I7504L  COMPUTER VELOCITY Z          FFF FFFFFF FFFF FF FFF   FF
     003-12   I7504L  COMPUTER VELOCITY Z          111  11111  111  1 111
     003-24   I7504L  COMPUTER VELOCITY Z               11          1 1      1
     004-04   I7504L  COMPUTER VELOCITY Z             1      1    1        1
     005-01   I7504L  COMPUTER VELOCITY Z             2       2    2 2

              I75380  ALIGN GROUP RADIAL           FFF  FFFFF                                          E
     003-12   I75380  ALNMT GROUP RADIAL           222  22222
     003-24   I75380  ALIGNMENT GROUP RADIAL             22

              I75390  ALIGN GROUP TANG            FFF  FFFFF                                          E
     003-12   I75390  ALNMT GROUP TANG            222  22222
     003-24   I75390  ALIGNMENT GROUP TAN               22

              I75420  ALIGN GROUP AXIAL           FFF  FFFFF                                          E
     003-12   I75420  ALNMT GROUP AXIAL           222  22222
     003-24   I75420  ALIGNMENT GROUP AXIAL             22

              I7015T  COMPUTER EXHAUST            SSS SSSSSS                                          E
     003-12   I7015T  COMPUTER EXHAUST TEMP       111  11111
     003-24   I7015T  COMPUTER EXHAUST TEMP             11
     005-01   I7015T  COMPUTER EXHAUST                 2

              I7528V  YAW STEERING SIG            FFF FFFFFF FFFF FF FFF   FF
     003-12   I7528V  YAW STEERING SIG            111  11111  111  1 111
     003-24   I7528V  YAW STEERING SIG                 11          1 1      1
     004-04   I7528V  YAW STEERING SIGNAL             1      1    1        1
     005-01   I7528V  YAW STEERING SIGNAL                     2    2 2

              I7529V  ROLL RESOLVER SIG           FFF FFFFFF FFFF FF FFF   FF
     003-12   I7529V  ROLL RESOLVER SIG           111  11111  111  1 111
     003-24   I7529V  ROLL RESOLVER SIG                 11          1 1      1
     004-04   I7529V  ROLL RESOLVER SIGNAL            1      1    1        1
     005-01   I7529V  ROLL RESOLVER SIGNAL            2       2    2 2

              I7530V  PITCH RESOLVER SIG          FFF FFFFFF FFFF FF FFF   FF
     003-12   I7530V  PITCH RESOLVER SIG          111  11111  111  1 111
     003-24   I7530V  PITCH RESOLVER SIG                 11          1 1      1
     004-04   I7530V  PITCH RESOLVER SIGNAL           1      1    1        1
     005-01   I7530V  PITCH RESOLVER SIGNAL           2       2    2 2

              I7540V  TEMP CONTROL AMP OUT        FFF FFFFFF                                          E
     003-12   I7540V  TEMP CTL AMP OUT            222  22222
     003-24   I7540V  TEMP CTL AMP OUT                 11
     005-01   I7540V  TEMP CONTROL AMP OUT             2

              I7580V  AZM RESOLVER SIG            FFF FFFFFF FFFF FF FFF   FF
     003-12   I7580V  AZIMUTH RESOLVER SIG        111  11111  111  1 111
     003-24   I7580V  AZIMUTH RESOLVER SIG             11          1 1      1
```

```
OSTF 2 REC ASSIGNMNT 26 SEP 62    AE60-0653          123 123456 1234 123456 1 12345                    012

     004-04   I7580V  AZM RESOLVER SIGNAL                1      1    1        1
     005-01   I7580V  AZIMUTH RESOLVER SIGNAL            2       2    2 2

              I7510W  ELAPSED TIME                   FFF FFFFFF FFFF FF FFF   FF
     003-12   I7510W  ELAPSED TIME                   111  11111  111  1 111
     003-24   I7510W  ELAPSED TIME                        11          1 1      1
     004-04   I7510W  ELAPSED TIME                       1      1    1        1
     005-01   I7510W  ELAPSED TIME                       2       2    2 2

              I7521X  VERN ENGINE COF SIG            FFF FFFFFF FFFF FF FFF   FF
     003-12   I7521X  VERNIER ENG CUTOFF SIG         111  11111  111  1 111
     003-24   I7521X  VERNIER ENG CUTOFF SIG              11          1 1      1
     004-04   I7521X  VERN ENG CUTOFF SIGNAL             1      1    1        1

              I7522X  S ENGINE COF SIG               FFF FFFFFF FFFF FF FFF   FF
     003-12   I7522X  SUS ENG CUTOFF SIG             111  11111  111  1 111
     003-24   I7522X  SUS ENG CUTOFF SIG                  11          1 1      1
     004-04   I7522X  SUS ENG CUTOFF SIGNAL              1      1    1        1

              I7527X  PRE-ARM RELAY CLSD             FFF FFFFFF FFFF FF FFF   FF
     003-12   I7527X  PRE-ARM RELAY CLSD             111  11111  111  1 111
     003-24   I7527X  PRE-ARM RELAY CLSD                  11          1 1      1
     004-04   I7527X  PRE-ARM RELAY CLSD                 1      1    1        1

              I7537X  ELEVATION WARNING              RRR RRRRRR  RRR  R RRR    R
     003-12   I7537X  ELEVATION WARNING              111  11111  111  1 111
     003-24   I7537X  ELEVATION WARNING                   11          1 1      1
     005-01   I7537X  ELEVATION WARNING                  2       2    2 2

              I7570X  STAGING SIGNAL                 FFF FFFFFF FFFF FF FFF   FF
     003-12   I7570X  STAGING SIGNAL                 111  11111  111  1 111
     003-24   I7570X  STAGING SIGNAL                      11          1 1      1
     004-04   I7570X  STAGING SIGNAL                     1      1    1        1

              I7611X  START COUNTDOWN                RRR RRRRRR  RRR  R RRR    R
     003-12   I7611X  START COUNTDOWN                 111  11111  111  1 111
     003-24   I7611X  START COUNTDOWN                      11          1 1      1
     005-01   I7611X  START COUNTDOWN                    2       2    2 2

              I7612X  ST FINE ALN-TRG MODE           RRR RRRRRR  RRR  R RRR    R
     003-12   I7612X  START FINE ALNMT-TRIG MODE     111  11111  111  1 111
     003-24   I7612X  START FINE ALNMT-TRIG MODE          11          1 1      1
     005-01   I7612X  START FINE ALNMT-TRIG MODE         2       2    2 2

              I7613X  Z AXIS VERT-FINE ALN           RRR RRRRRR  RRR  R RRR    R
     003-12   I7613X  Z AXIS VERT-FINE ALNMT         111  11111  111  1 111
     003-24   I7613X  Z AXIS VERT-FINE ALNMT              11          1 1      1
     005-01   I7613X  Z AXIS VERT-FINE ALNMT             2       2    2 2

              I7614X  FINE ALMNT COMPLETE            RRR RRRRRR  RRR  R RRR    R
     003-12   I7614X  FINE ALNMT COMPLETE            111  11111  111  1 111
     003-24   I7614X  FINE ALNMT COMPLETE                 11          1 1      1
     005-01   I7614X  FINE ALNMT COMPLETE                2       2    2 2

              I7615X  COMPUTER TEST COMP             RRR RRRRRR  RRR  R RRR    R
     003-12   I7615X  COMPUTER TEST COMPLETE         111  11111  111  1 111
     003-24   I7615X  COMPUTER TEST COMPLETE              11          1 1      1
     005-01   I7615X  COMPUTER TEST COMPLETE             2       2    2 2

              I7616X  START X ACCEL OFFSET           RRR RRRRRR  RRR  R RRR    R
```

```
OSTF 2 REC ASSIGNMNT 26 SEP 62    AE60-0653          123 123456 1234 123456 1 12345                    013

     003-12   I7616X  ST X ACCELEROMETER OFFSET     111  11111  111  1 111
     003-24   I7616X  ST X ACCELEROMETER OFFSET          11          1 1       1
     005-01   I7616X  ST X ACCELEROMETER OFFSET         2       2    2 2

              I7617X  ACCEL TEST COMPLETE           RRR RRRRRR  RRR  R RRR     R
     003-12   I7617X  ACCELEROMETER TEST COMPL      111  11111  111  1 111
     003-24   I7617X  ACCELEROMETER TEST COMPL           11          1 1       1
     005-01   I7617X  ACCELEROMETER TEST COMPLETE       2       2    2 2

              I7618X  IGS READY                     RRR RRRRRR  RRR  R RRR     R
     003-12   I7618X  IGS READY                     111  11111  111  1 111
     003-24   I7618X  IGS READY                          11          1 1       1
     005-01   I7618X  IGS READY                         2       2    2 2

              I7619X  GO INERTIAL COMMAND           RRR RRRRRR  RRR  R RRR     R
     003-12   I7619X  GO INERTIAL COMMAND           111  11111  111  1 111
     003-24   I7619X  GO INERTIAL COMMAND                11          1 1       1
     005-01   I7619X  GO INERTIAL COMMAND               2       2    2 2

              I7620X  MGS INERTIAL                  RRR RRRRRR  RRR  R RRR     R
     003-12   I7620X  MGS INERTIAL                  111  11111  111  1 111
     003-24   I7620X  MGS INERTIAL                       11          1 1       1
     005-01   I7620X  MGS INERTIAL                      2       2    2 2

              I7621X  ZERO G ACC COMPLETE           RRR RRRRRR  RRR  R RRR     R
     003-12   I7621X  ZERO Z ACCELEROMETER COMPL    111  11111  111  1 111
     003-24   I7621X  ZERO Z ACCELEROMETER COMPL         11          1 1       1
     005-01   I7621X  ZERO Z ACCELEROMETER COMPL        2       2    2 2

              I7622X  SCALE X PLUS 1G               RRR RRRRRR  RRR  R RRR     R
     003-12   I7622X  SCALE X PLUS 1G               111  11111  111  1 111
     003-24   I7622X  SCALE X PLUS 1G                    11          1 1       1
     005-01   I7622X  SCALE X PLUS 1G                   2       2    2 2

              I7623X  SCALE X MINUS 1G              RRR RRRRRR  RRR  R RRR     R
     003-12   I7623X  SCALE X MINUS 1G              111  11111  111  1 111
     003-24   I7623X  SCALE X MINUS 1G                    11          1 1       1
     005-01   I7623X  SCALE X MINUS 1G                   2       2    2 2

              I7624X  START ZERO X ACCELEROMETER    RRR RRRRRR  RRR  R RRR     R
     003-12   I7624X  START ZERO X ACCELEROMETER    111  11111  111  1 111
     003-24   I7624X  ST ZERO X ACCELEROMETER            11          1 1       1
     005-01   I7624X  START ZERO X ACCELEROMETER        2       2    2 2

              I7625X  RETURN TO READY REG           RRR RRRRRR  RRR  R RRR     R
     003-12   I7625X  RETURN TO READY REQ           111  11111  111  1 111
     003-24   I7625X  RETURN TO READY REQ                11          1 1       1
     005-01   I7625X  RETURN TO READY REG               2       2    2 2

              I7626X  RETURN TO READY COMP          RRR RRRRRR  RRR  R RRR     R
     003-12   I7626X  RETURN TO READY COMPLETE      111  11111  111  1 111
     003-24   I7626X  RETURN TO READY COMPLETE           11          1 1       1
     005-01   I7626X  RETURN TO READY COMP              2       2    2 2

              I7627X  GO ON VERT MEMORY             RRR RRRRRR  RRR  R RRR     R
     003-12   I7627X  GO ON VERT MEMORY             111  11111  111  1 111
     003-24   I7627X  GO ON VERT MEMORY                  11          1 1       1
     005-01   I7627X  GO ON VERT MEMORY                 2       2    2 2

              I7628X  GO ON AZIMUTH MEMORY          RRR RRRRRR  RRR  R RRR
```

```
OSTF 2 REC ASSIGNMNT 26 SEP 62    AE60-0653          123 123456 1234 123456 1 12345                    014

     003-12   I7628X  GO ON AZIMUTH MEMORY          111  11111  111  1 111
     005-01   I7628X  GO ON AZIMUTH MEMORY              2       2    2 2

              I7630X  GYRO A IN BAND                RRR RRRRRR  RRR  R RRR
     003-12   I7630X  GYRO A IN BAND                111  11111  111  1 111
     005-01   I7630X  GYRO A IN BAND                    2       2    2 2

              I7631X  GYRO B IN BAND                RRR RRRRRR  RRR  R RRR
     003-12   I7631X  GYRO B IN BAND                111  11111  111  1 111
     005-01   I7631X  GYRO B IN BAND                    2       2    2 2

              L7013P  FLAME DEFLECT AMB PRESS 1                        F                          E
     034-00   L7013P  FLAME DEFLECT AMB PRESS 1                        1
     038-12   L7013P  FLAME DEFLECT AMB PRESS 1                        1

              L7014P  FLAME DEFLECT AMB PRESS 2                        F                          E
     034-00   L7014P  FLAME DEFLECT AMB PRESS 2                        1
     038-12   L7014P  FLAME DEFLECT AMB PRESS 2                        1

              L7015P  FLAME DEFLECT AMB PRESS 3                        F                          E
     034-00   L7015P  FLAME DEFLECT AMB PRESS 3                        1
     038-12   L7015P  FLAME DEFLECT AMB PRESS 3                        1

              L7016P  FLAME DEFLECT AMB PRESS 4                        F                          E
     034-00   L7016P  FLAME DEFLECT AMB PRESS 4                        1
     038-12   L7016P  FLAME DEFLECT AMB PRESS 4                        1

              L7601P  HT SHIELD OUTSIDE PRESS 1                        F                          E
     034-00   L7601P  HT SHIELD OUTSIDE PRESS 1                        1
     037-01   L7601P  HT SHIELD OUTSIDE PRESS 1                        1
     038-12   L7601P  HT SHIELD OUTSIDE PRESS 1                        1

              L7602P  HT SHIELD OUTSIDE PRESS 2                        F                          E
     034-00   L7602P  HT SHIELD OUTSIDE PRESS 2                        1
     037-01   L7602P  HT SHIELD OUTSIDE PRESS 2                        1
     038-12   L7602P  HT SHIELD OUTSIDE PRESS 2                        1

              M7604N  FWD LIFT-OFF CAMERA                         L     L
     034-00   M7604N  FWD LIFT-OFF CAMERA                         1     1
     037-01   M7604N  FWD LIFTOFF CAMERA                          1     1
     037-03   M7604N  FWD LIFTOFF CAMERA                          1     1

              M7605N  AFT LIFTOFF CAMERA                                L
     034-00   M7605N  AFT LIFT-OFF CAMERA                              1
     037-01   M7605N  AFT LIFTOFF CAMERA                               1
     037-03   M7605N  AFT LIFTOFF CAMERA                               1

              N7829A  SILO-L/P ACCEL #1                          00                                E
     001-19   N7829A  L/P ACCELN 1                               11

              N7830A  SILO-L/P ACCEL #2                          00                                E
     001-19   N7830A  L/P ACCELN 2                               11

              N7831A  SILO-L/P ACCEL #3                          00                                E
     001-19   N7831A  L/P ACCELN 3                               11

              N7832A  SILO-L/P ACCEL #4                          00                                E
```

```
OSTF 2 REC ASSIGNMNT 26 SEP 62    AE60-0653        123 123456 1234 123456 1 12345                    015

     001-19   N7832A  L/P ACCELN 4                          11

              N7833A  SILO-L/P ACCEL #5                     00                                        E
     001-19   N7833A  L/P ACCELN 5                          11

              N7834A  SILO-L/P ACCEL #6                     00                                        E
     001-19   N7834A  L/P ACCELN 6                          11

              N7835A  CRIB ACCELERATION #7                  00                                        E
     001-19   N7835A  CRIB ACCELN 7                         11

              N7836A  CRIB ACCELERATION #8                  00                                        E
     001-19   N7836A  CRIB ACCELN 8                         11

              N7837A  CRIB ACCELERATION #9                  00                                        E
     001-19   N7837A  CRIB ACCELN 9                         11

              N7838A  CRIB ACCELERATION #1                  00                                        E
     001-19   N7838A  CRIB ACCELN 10                        11

              N7839A  CRIB ACCELERATION #1                  00                                        E
     001-19   N7839A  CRIB ACCELN 11                        11

              N7840A  CRIB ACCELERATION #1                  00                                        E
     001-19   N7840A  CRIB ACCELN 12                        11

              N7842A  SILO L/P  ACCELN Z1                                                             E
     001-06   N7842A  SILO L/P ACCELN Z1

              N7843A  SILO L/P ACCELN Z2                                                              E
     001-06   N7843A  SILO L/P ACCELN Z2

              N7844A  SILO L/P ACCELN Z3                                                              E
     001-06   N7844A  SILO L/P ACCELN Z3

              N7845A  SILO L/P ACCELN Z4                                                              E
     001-06   N7845A  SILO L/P ACCELN Z4

              N7846A  SILO L/P ACCELN X1                                                              E
     001-06   N7846A  SILO L/P ACCELN X1

              N7847A  SILO L/P ACCELN X2                                                              E
     001-06   N7847A  SILO L/P ACCELN X2

              N7848A  SILO L/P ACCELN X3                                                              E
     001-06   N7848A  SILO L/P ACCELN X3

              N7849A  SILO L/P ACCELN X4                                                              E
     001-06   N7849A  SILO L/P ACCELN X4

              N7803B  L/P DRIVE MOTOR SPEED                 888  8 888    8 88                        E
     001-06   N7803B  L/P DRIVE MOTOR SPEED                 111  1 111    1 11
     024-     N7803B  L/P DRIVE MOTOR SPEED                      1 1      1 1
     099-00   N7803B  L/P DRIVE MOTOR SPEED                 111  1 111    1 11
```

```
OSTF 2 REC ASSIGNMNT 26 SEP 62    AE60-0653          123 123456 1234 123456 1 12345                    016

            N7908D  L/P DISPLACEMENT                          SSS  S SSS    S SS                      E
   001-06   N7908D  L/P DISPLACEMENT                          111  1 111    1 11
   024-     N7908D  L/P DISPLACEMENT                               1 1      1 1
   099-00   N7908D  L/P DISPLACEMENT                          111  1 111    1 11

            N7804F  DRIVE MOTOR TORQUE                        SSS  S SSS    S SS                      E
   001-06   N7804F  DRIVE MOTOR TORQUE                        111  1 111    1 11
   024-     N7804F  DRIVE MOTOR TORQUE                             1 1      1 1
   099-00   N7804F  DRIVE MOTOR TORQUE                        111  1 111    1 11

            N7046J  B1 INLET AIR REL HUM          PP
   003-01   N7046J  B1 POD INLET AIR HUM          11

            N7685J  SILO UPPER RH                             P    PPP
   001-05   N7685J  SILO UPPER RH HUM                         1    111

            N7687J  IGLOO RH
   001-05   N7687J  IGLOO RH HUM

            N7800J  MSL COMPARTMENT RH                        P    PPP
   001-05   N7800J  MSL COMPT RH HUM                          1    111

            N7801J  L/C EQUIPMENT RH
   001-05   N7801J  L/C EQUIP RH HUM
   009-03   N7801J  L/C EQUIPMENT RH HUM

            N7802J  SILO LOWER RH                             P    PPP
   001-05   N7802J  SILO LOWER RH HUM                         1    111
   009-03   N7802J  SILO LOWER RH HUM

            N7980L  7 IN. MOTION UP FAST                                                              E
   001-06   N7980L  7 IN. MOTION UP FAST

            N7981L  7 IN. MOTION UP SLOW                                                              E
   001-06   N7981L  7 IN. MOTION UP SLOW

            N7982L  7 IN. MOTION DOWN SLOW                                                            E
   001-06   N7982L  7 IN. MOTION DOWN SLOW

            N7747N  TV CAMERA 1
   099-00   N7747N  TV CAMERA 1                                    1 111    1 11

            N7748N  TV CAMERA 2
   099-00   N7748N  TV CAMERA 2                                    1 111    1 11

            N7749N  TV CAMERA 3
   099-00   N7749N  TV CAMERA 3                                    1 111    1 11

            N7750N  TV CAMERA 4
   099-00   N7750N  TV CAMERA 4                                    1 111    1 11

            N7751N  TV CAMERA 5
   099-00   N7751N  TV CAMERA 5                                    1 111    1 11

            N7752N  TV CAMERA 6
```

```
OSTF 2 REC ASSIGNMNT 26 SEP 62    AE60-0653          123 123456 1234 123456 1 12345                017

     099-00   N7752N  TV CAMERA 6                                     1 111    1 11

              N7753N  TV CAMERA 7
     099-00   N7753N  TV CAMERA 7                                     1 111    1 11

              N7754N  LAUNCH CONSOLE RH                 LLLLL  LLL  LLLLL    LLLL
     009-01   N7754N  LAUNCH CONSOLE RH CAMERA         11111  111  11111    1111
     009-02   N7754N  LAUNCH CONSOLE RH CAMERA         11111  111  1 111    1 11

              N7755N  LAUNCH CONSOLE LH                 LLLLL  LLL  LLLLL    LLLL
     009-01   N7755N  LAUNCH CONSOLE LH CAMERA         11111  111  11111    1111
     009-02   N7755N  LAUNCH CONSOLE LH CAMERA         11111  111  1 111    1 11

              N7035P  TANK DIFFERENTIAL P                     VVV  V VVV
     007-01   N7035P  DIFFERENTIAL PRESS/GAGE/               111  1 111

              N7230P  CRIB AMB PRESS 1                          F      F                          E
     040-03   N7230P  CRIB AMB PRESS 1                          1      1

              N7231P  CRIB AMB PRESS 2                          F      F                          E
     040-03   N7231P  CRIB AMB PRESS 2                          1      1

              N7232P  CRIB AMB PRESS 3                          F      F                          E
     040-03   N7232P  CRIB AMB PRESS 3                          1      1

              N7233P  CRIB AMB PRESS 4                          F      F                          E
     040-03   N7233P  CRIB AMB PRESS 4                          1      1

              N7234P  CRIB AMB PRESS 5                          F      F                          E
     040-03   N7234P  CRIB AMB PRESS 5                          1      1

              N7235P  CRIB AMB PRESS 6                          F      F                          E
     040-03   N7235P  CRIB AMB PRESS 6                          1      1

              N7050R  B2 POD AIR FLOW QUAD 2       DD         D              DDD                   E
     003-01   N7050R  B2 POD AIR FLOW QUAD         11
     003-12   N7050R  B2 POD AIR FLOW QUAD 2                   1              111
     024-     N7050R  B2 POD AIR FLOW QUAD 2                                  111

              N7155R  B2 POD AIR FLOW QUAD 3                   F              DDD                   E
     003-12   N7155R  B2 POD AIR FLOW QUAD 3                   1              111
     024-     N7155R  B2 POD AIR FLOW QUAD 3                                  111

              N7654R  GO2 VENT                     D                                              E
     001-03   N7654R  GOX VENT GAS FLOWRATE        1

              N7655R  EF 40, 41 EXHAUST                                                           E
     001-05   N7655R  XHST FAN 40,41 XHST FL/RT

              N7656R  XHST FAN 30 XHST FL/RT                                                      E
     001-05   N7656R  XHST FAN 30 XHST FL/RT

              N7962S  LOAD CELL QUAD 1 L/P                                                        E
     001-06   N7962S  LOAD CELL QUAD 1 L/P

              N7963S  LOAD CELL QUAD 2 L/P                                                        E
```

```
OS*F 2 REC ASSIGNMNT 26 SEP 62     AE60-0653          123 123456 1234 123456 1 12345                    018

     001-06   N7963S  LOAD CELL QUAD 2 L/P

              N7964S  LOAD CELL QUAD 3 L/P                                                                E
     001-06   N7964S  LOAD CELL QUAD 3 L/P

              N7965S  LOAD CELL QUAD 4 L/P                                                                E
     001-06   N7965S  LOAD CELL QUAD 4 L/P

              N7032T  GUIDANCE POD EXHAUST          S                                                     E
     005-01   N7032T  GUIDANCE POD XHST TEMP        2

              N7048T  B2 AIR INLET TEMP QUAD 2                D            DDD                            E
     003-12   N7048T  B2 AIR INLET TEMP QUAD 2                1            111
     024-     N7048T  B2 AIR INLET TEMP QUAD 2                             111

              N7154T  B1 AIR AT RH MEAS            SS                                                     E
     003-01   N7154T  B1 POD AIR INLET TEMP         11

              N7156T  B2 AIR INLET TEMP QUAD 3                D            DDD                            E
     003-12   N7156T  B2 AIR INLET TEMP QUAD 3                1            111
     024-     N7156T  B2 AIR INLET TEMP QUAD 3                             111

              N7159T  VENT SYS GOX @ ELBO          D                                                      E
     001-03   N7159T  VENT GOX TEMP @ ELBOW        1

              N7160T  VNT SYS GOX @ FAN IN         D                                                      E
     001-03   N7160T  VENT GOX TEMP @ FAN INL      1

              N7161T  VNT SYS GOX @ GAT IN         D                                                      E
     001-03   N7161T  VENT GOX TEMP @ GATE INL     1

              N7579T  AIR DUCT IN                         T     TTT
     001-05   N7579T  AIR DUCT INLET TEMP                 1     111

              N7580T  AIR DUCT OUT                        T     TTT
     001-05   N7580T  AIR DUCT OUTLET TEMP                1     111

              N7581T  SILO Q II LVL-1                           TTT
     001-05   N7581T  SILO QUAD 2 LVL 1 TEMP                    111

              N7582T  SILO Q II LVL-2                     T     TTT
     001-05   N7582T  SILO QUAD 2 LVL 2 TEMP              1     111

              N7583T  SILO Q II LVL-3                           TTT
     001-05   N7583T  SILO QUAD 2 LVL 3 TEMP                    111

              N7584T  SILO Q II LVL-4                     T     TTT
     001-05   N7584T  SILO QUAD 2 LVL 4 TEMP              1     111

              N7585T  SILO Q II LVL-5                           TTT
     001-05   N7585T  SILO QUAD 2 LVL 5 TEMP                    111

              N7586T  SILO Q II LVL-6                           TTT
     001-05   N7586T  SILO QUAD 2 LVL 6 TEMP                    111
```

```
OSTF 2 REC ASSIGNMNT 26 SEP 62    AE60-0653          123 123456 1234 123456 1 12345                    019

          N7587T  SILO Q II LVL-7                                  TTT
001-05    N7587T  SILO QUAD 2 LVL 7 TEMP                           111

          N7588T  SILO Q II LVL-8                            T     TTT
001-05    N7588T  SILO QUAD 2 LVL 8 TEMP                     1     111

          N7589T  HT REC WATER IN                            F     DDD                                E
001-05    N7589T  HT RECOVERY H2O IN TEMP                    1     111

          N7590T  ELEC BLR WATER OUT                         F     DDD                                E
001-05    N7590T  ELEC BOILER H2O OUT TEMP                   1     111

          N7597T  MSL COMP LVL-1                             T     TTT
001-05    N7597T  MSL COMPT LVL 1 TEMP                       1     111

          N7598T  MSL COMP LVL-2                             T     TTT
001-05    N7598T  MSL COMPT LVL 2 TEMP                       1     111

          N7599T  MSL COMP LVL-3                             T     TTT
001-05    N7599T  MSL COMPT LVL 3 TEMP                       1     111

          N7600T  MSL COMP LVL-4                             T     TTT
001-05    N7600T  MSL COMPT LVL 4 TEMP                       1     111

          N7601T  MSL COMP LVL-5                             T     TTT
001-05    N7601T  MSL COMPT LVL 5 TEMP                       1     111

          N7602T  MSL COMP LVL-6                             T     TTT
001-05    N7602T  MSL COMPT LVL 6 TEMP                       1     111

          N7603T  MSL COMP LVL-7                             T     TTT
001-05    N7603T  MSL COMPT LVL 7 TEMP                       1     111

          N7604T  MSL COMP LVL-8                             T     TTT
001-05    N7604T  MSL COMPT LVL 8 TEMP                       1     111

          N7605T  DUST SEP AIR OUT                                 TTT
001-05    N7605T  DUST SEP AIR OUT TEMP                            111

          N7606T  COOLING TOWER H2O IN
001-05    N7606T  COOLING TWR H2O IN TEMP

          N7607T  MSL COMP AIR SUPPLY                        T     TTT
001-05    N7607T  MSL COMPT AIR SUPPLY TEMP                  1     111

          N7620T  H2O HEAT RECLAIMER                         F     DDD                                E
001-05    N7620T  H2O HT RECLAIMER TEMP                      1     111

          N7621T  ELEC EQUIP AIR IN #1                             PPP
001-05    N7621T  ELCT EQUIP AIR IN 1 TEMP                         111
009-03    N7621T  ELCT EQUIP AIR IN #1 TEMP

          N7622T  ELEC EQUIP AIR IN #2                             PPP
001-05    N7622T  ELCT EQUIP AIR IN 2 TEMP                         111
```

```
OSTF 2 REC ASSIGNMNT 26 SEP 62    AE60-0653        123 123456 1234 123456 1 12345                020

     009-03   N7622T  ELCT EQUIP AIR IN #2 TEMP

              N7623T  ELEC EQUIP AIR IN #3                          PPP
     001-05   N7623T  ELCT EQUIP AIR IN 3 TEMP                      111
     009-03   N7623T  ELCT EQUIP AIR IN #3 TEMP

              N7624T  ELEC EQUIP AIR IN #4                          PPP
     001-05   N7624T  ELCT EQUIP AIR IN 4 TEMP                      111
     009-03   N7624T  ELCT EQUIP AIR IN #4 TEMP

              N7625T  ELEC EQUIP AIR IN #5                          PPP
     001-05   N7625T  ELCT EQUIP AIR IN 5 TEMP                      111
     009-03   N7625T  ELCT EQUIP AIR IN #5 TEMP

              N7626T  ELEC EQUIP AIR OUT #1                         PPP
     001-05   N7626T  ELCT EQUIP AIR OUT 1 TEMP                     111
     009-03   N7626T  ELCT EQUIP AIR OUT #1 TEMP

              N7627T  ELEC EQUIP AIR OUT #2                         PPP
     001-05   N7627T  ELCT EQUIP AIR OUT 2 TEMP                     111
     009-03   N7627T  ELCT EQUIP AIR OUT #2 TEMP

              N7628T  ELEC EQUIP AIR OUT #3                         PPP
     001-05   N7628T  ELCT EQUIP AIR OUT 3 TEMP                     111
     009-03   N7628T  ELCT EQUIP AIR OUT #3 TEMP

              N7629T  ELEC EQUIP AIR OUT #                          PPP
     001-05   N7629T  ELCT EQUIP AIR OUT 4 TEMP                     111
     009-03   N7629T  ELCT EQUIP AIR OUT #4 TEMP

              N7630T  ELEC EQUIP AIR OUT #5                         PPP
     001-05   N7630T  ELCT EQUIP AIR OUT 5 TEMP                     111
     009-03   N7630T  ELCT EQUIP AIR OUT #5 TEMP

              N7641T  POD AIR COND H20 IN          TT        F     DDC                          E
     001-05   N7641T  POD AIR COND H20 IN TEMP                1     111
     003-01   N7641T  POD AIR COND H20 IN TEMP     11

              N7642T  POD AIR COND H20 OUT         TT        F     DDD                          E
     001-05   N7642T  POD AIR COND H20 OUT TEMP               1     111
     003-01   N7642T  POD AIR COND H20 OUT TEMP    11

              N7643T  CC 10 COLD H20 OUT
     001-05   N7643T  COOL COIL 10 H20 OUT TEMP

              N7644T  CC 40 COLD H20 OUT                     T     TTT
     001-05   N7644T  COOL COIL 40 H20 OUT TEMP               1     111

              N7645T  CC 41 COLD H20 OUT                     T
     001-05   N7645T  COOL COIL 41 H20 OUT TEMP               1

              N7646T  HC 40 HOT H20 IN                       T     TTT
     001-05   N7646T  HEAT COIL 40 H20 IN TEMP                1     111

              N7647T  HC 40 HOT H20 OUT                      T     TTT
```

```
OSTF 2 REC ASSIGNMNT 26 SEP 62    AE60-0653          123 123456 1234 123456 1 12345                021

     001-05   N7647T  HEAT COIL 40 H20 OUT TEMP                  1    111

              N7649T  WCU 50 H20 OUT                             T    TTT
     001-05   N7649T  WCU 50 H20 OUT TEMP                        1    111

              N7650T  WCU 50, 51 H20 IN                          T    TTT
     001-05   N7650T  WCU 50,51 H20 IN TEMP                      1    111

              N7651T  LCC COLD H20 OUT
     001-05   N7651T  LCC COLD H20 OUT TEMP

              N7746T  COOLING TOWR H20 OUT
     001-05   N7746T  COOLING TWR H20 OUT TEMP

              N7807T  L/C EQUIP AIR RETURN
     001-05   N7807T  L/C EQUIP AIR RETURN TEMP
     009-03   N7807T  L/C EQUIP AIR RETURN TEMP

              N1870V  TRL WIRE NOISE 1                             F      F
     034-00   N1870V  TWU NOISE 1                                 1      1

              N7002X  SELECT A BUTTON                   RRRRR  RRR  R RRR    R RR
     006-01   N7002X  SELECT A BUTTON                   11111  111  1 111    1 11

              N7003X  SELECT B BUTTON                   RRRRR  RRR  R RRR    R RR
     006-01   N7003X  SELECT B BUTTON                   11111  111  1 111    1 11

              N7024X  START BUTTON                      RRRRR  RRR  R RRR    R RR
     010-06   N7024X  START C/D BUTTON                  11111  111  1 111    1 11

              N7028X  COMMIT START BUTTON              RRRRRR  RRR  R RRR    R RR
     007-08   N7028X  COMMIT START BUTTON              2 222   111  1 111    1 11
     010-06   N7028X  COMMIT START BUTTON               11111  111  1 111    1 11
     024-     N7028X  COMMIT START BUTTON                           1 1      1 1

              N7030X  ALARM RESET SWITCH                RRRRR  RRR  R RRR    R RR
     006-01   N7030X  ALARM RESET SWITCH                11111  111  1 111    1 11

              N7042X  START ABORT SWITCH                RRRRR  RRR  R RRR    R RR
     006-01   N7042X  START ABORT SWITCH                11111  111  1 111    1 11

              N7046X  DOORS OPEN                               RRR  R RRR    R RR
     001-07   N7046X  DOORS OPEN                               111  1 111    1 11

              N7047X  DOORS CLOSED                             RRR  R RRR    R RR
     001-07   N7047X  DOORS CLOSED                             111  1 111    1 11

              N7500X  ZONE CHECK LS CLSD                       RRR  R RRR    R RR
     001-06   N7500X  ZONE CHECK LS CLSD                       111  1 111    1 11
     003-02   N7500X  ZONE CHECK LS CLSD                       111  1 111    1 11

              N7501X  1000 IN. LS CLSD                         RRR  R RRR    R RR
     001-06   N7501X  1000 IN. LS CLSD                         111  1 111    1 11

              N7502X  HI SPEED DECELN SW CLSD                  RRR  R RRR    R RR
```

```
OSTF 2 REC ASSIGNMNT 26 SEP 62    AE60-0653          123 123456 1234 123456 1 12345                022

     001-06   N7502X  HI SPEED DECELN SW CLSD                  111  1 111    1 11

              N7503X  UPR OVERSPEED ZONE LS CLSD               RRR  R RRR    R RR
     001-06   N7503X  UPR OVERSPEED ZONE LS CLSD               111  1 111    1 11

              N7504X  OVERSPEED SENSOR ENERGIZED               RRR  R RRR    R RR
     001-06   N7504X  OVERSPEED SENSOR ENERGIZED               111  1 111    1 11

              N7505X  B/O VLV CLSD                             RRR  R RRR    R RR
     003-02   N7505X  B/O VLV CLSD                             111  1 111    1 11

              N7506X  DP NOT LOW                               RRR  R RRR    R RR
     003-02   N7506X  DP NOT LOW                               111  1 111    1 11

              N7507X  MSL LIFT COMMIT START                    RRR  R RRR    R RR
     009-02   N7507X  MSL LIFT COMMIT START                    111  1 111    1 11

              N7508X  AUTOMATIC PRESSN                         RRR  R RRR    R RR
     009-02   N7508X  AUTOMATIC PRESSN                         111  1 111    1 11

              N7509X  READY FOR COMMIT                         RRR  R RRR    R RR
     006-02   N7509X  READY FOR COMMIT                         111  1 111    1 11

              N7510X  PWR TO INTERNAL                          RRR  R RRR    R RR
     007-03   N7510X  PWR TO INTERNAL                          111  1 111    1 11

              N7511X  PWR TO EXTERNAL                          RRR  R RRR    R RR
     007-03   N7511X  PWR TO EXTERNAL                          111  1 111    1 11

              N7512X  COMMIT LOCKUP                            RRR  R RRR    R RR
     009-02   N7512X  COMMIT LOCKUP                            111  1 111    1 11

              N7513X  MSL LIFT DOWN & LOCKED                   RRR  R RRR    R RR
     001-06   N7513X  MSL LIFT DOWN & LOCKED                   111  1 111    1 11
     006-04   N7513X  MSL LIFT DOWN & LOCKED                   111  1

              N7514X  AUTOPILOT ON AMBER                       RRR  R RRR    R RR
     006-02   N7514X  AUTOPILOT ON AMBER                       111  1 111    1 11
     007-02   N7514X  AUTOPILOT ON AMBER                       111  1 111    1 11

              N7515X  LWR FUEL TANK PRESS                      RRR  R RRR    R RR
     003-02   N7515X  LWR FUEL TANK PRESS                      111  1 111    1 11

              N7516X  RAISE FUEL TK PRESS                      RRR  R RRR    R RR
     003-02   N7516X  RAISE FUEL TK PRESS                      111  1 111    1 11

              N7517X  GUID FAIL MARGINAL                       RRR  R RRR
     003-12   N7517X  GUID FAIL MARGINAL                       111  1 111

              N7518X  AUTOPILOT FAIL MARGINAL                  RRR  R RRR    R RR
     007-02   N7518X  AUTOPILOT FAIL MARGINAL                  111  1 111    1 11

              N7519X  FLT PROGRAMMER SAFE                      RRR  R RRR    R RR
     007-02   N7519X  FLT PROGRAMMER SAFE                      111  1 111    1 11
```

OSTF 2 REC ASSIGNMNT 26 SEP 62 AE60-0653 123 123456 1234 123456 1 12345 023

	N7520X	INSTR AIR BELOW 50	RRR	R RRR	R RR
003-05	N7520X	INSTR AIR BELOW 50	111	1 111	1 11
	N7521X	AUTOPILOT FAIL	RRR	R RRR	R RR
007-02	N7521X	AUTOPILOT FAIL	111	1 111	1 11
	N7522X	HE VLV 14 OPEN	RRR	R RRR	R RR
003-03	N7522X	HE VLV 14 OPEN	111	1 111	1 11
	N7523X	DC AT MSL	RRR	R RRR	R RR
007-03	N7523X	DC AT MSL	111	1 111	1 11
	N7524X	R/V BAT TEMP	RRR	R RRR	R RR
003-14	N7524X	R/V BAT TEMP	111	1 111	1 11
	N7525X	VENT HE BTL	RRR	R RRR	R RR
003-04	N7525X	VENT HE BTL	111	1 111	1 11
	N7526X	HYD PRESS	RRR	R RRR	R RR
003-06	N7526X	HYD PRESS	111	1 111	1 11
	N7527X	GUIDANCE FAIL	RRR	R RRR	
003-12	N7527X	GUIDANCE STANDBY	111	1 111	
	N7528X	MSL LIFT UP & LOCKED	RRR	R RRR	R RR
001-06	N7528X	MSL LIFT UP & LOCKED	111	1 111	1 11
009-02	N7528X	MSL LIFT UP & LOCKED	111	1 111	1 11
	N7529X	PNEU INTERNAL GREEN	RRR	R RRR	R RR
003-02	N7529X	PNEU INTERNAL GREEN	111	1 111	1 11
006-02	N7529X	PNEU INTERNAL GREEN	111	1 111	1 11
	N7530X	PNEU PH 2 AMBER	RRR	R RRR	R RR
003-02	N7530X	PNEU PH 2 AMBER	111	1 111	1 11
006-02	N7530X	PNEU PH 2 AMBER	111	1 111	1 11
	N7531X	HE LOAD AMBER	RRR	R RRR	R RR
003-02	N7531X	HE LOAD AMBER	111	1 111	1 11
003-03	N7531X	HE LOAD AMBER	111	1 111	1 11
003-04	N7531X	HE LOAD AMBER	111	1 111	1 11
006-02	N7531X	HE LOAD AMBER	111	1 111	1 11
	N7532X	PROGRAMMER ARMED AMBER	RRR	R RRR	R RR
007-02	N7532X	PROGRAMMER ARMED AMBER	111	1 111	1 11
	N7533X	ENGINE START AMBER	RRR	R RRR	R RR
006-02	N7533X	ENGINE START AMBER	111	1 111	1 11
	N7534X	GUIDANCE COMMIT	RRR	R RRR	
003-12	N7534X	GUIDANCE COMMIT	111	1 111	
	N7535X	PWR INTERNAL GREEN	RRR	R RRR	R RR
006-02	N7535X	PWR INTERNAL GREEN	111	1 111	1 11
024-	N7535X	PWR INTERNAL GREEN		1 1	1 1
	N7536X	AUTOPILOT TEST AMBER	RRR	R RRR	R RR

```
OSTF 2 REC ASSIGNMNT 26 SEP 62    AE60-0653          123 123456 1234 123456 1 12345                  024

     007-02   N7536X  AUTOPILOT TEST AMBER                  111  1 111    1 11

              N7537X  GUID READY AMBER                     RRR  R RRR
     003-12   N7537X  GUID READY AMBER                     111  1 111

              N7984X  MISSILE AWAY                           R  R R R    R R
     024-     N7984X  MISSILE AWAY                              1 1      1 1
     034-00   N7984X  MISSILE AWAY                           1      1

              N7985X  MISSILE ON STAND                       R      R
     034-00   N7985X  MISSILE ON STAND                       1      1

              P7137B  B1 PUMP SPEED LO                                                                E
     010-10   P7137B  B1 PUMP SPEED LO

              P7138B  B2 PUMP SPEED LO                                                                E
     010-10   P7138B  B2 PUMP SPEED LO

              P1529D  SUS MAIN LOX VLV POS                   F                                        E
     034-00   P1529D  SUS MAIN LOX VLV POS                   1
     037-03   P1529D  S MAIN LOX VLV POS                     1
     038-08   P1529D  SUS MAIN LOX VLV POS                   1

              P1830D  SUS FUEL VLV POS                       F                                        E
     034-00   P1830D  SUS FUEL VLV POS                       1
     037-03   P1830D  SUS FUEL VLV POS                       1
     038-08   P1830D  SUS FUEL VLV POS                       1

              P12060  SUS ENG LOX DOME                       F      F                                 E
     034-00   P12060  SUS ENG LOX DOME                       1      1
     037-03   P12060  SUS ENG LOX DOME                       1      1

              P12080  B1 ENG LOX DOME                        F      F                                 E
     034-00   P12080  B1 ENG LOX DOME                        1      1
     037-03   P12080  B1 ENG LOX DOME                        1      1

              P12090  B2 ENG LOX DOME                        F                                        E
     034-00   P12090  B2 ENG LOX DOME                        1
     037-03   P12090  B2 ENG LOX DOME                        1

              P1002P  B1 FUEL PUMP INLET                   FFF  F FFF    F F                         E
              P1002P  B1 FUEL PUMP INLET                   SSS  S SSS    S S
     007-06   P1002P  B1 FUEL PUMP INLET PRESS             111  1 111
     024-     P1002P  B1 FUEL PUMP INLET PRESS                  1 1      1 1
     034-00   P1002P  B1 FUEL PUMP INLET PRESS               1      1
     037-03   P1002P  B1 FUEL PUMP INLET PRESS               1      1

              P1006P  SUS THR CHAMBER PRESS                  D      D
              P1006P  SUS THR CHAMBER PRESS                  F      F                                 E
     034-00   P1006P  SUS THR CHAMBER PRESS                  1      1
     037-03   P1006P  SUS THR CHAMBER PRESS                  1      1

              P1038P  B2 FUEL PUMP DISCH                   SSS  S SSS    S S
              P1038P  B2 FUEL PUMP DISCH                   FFF  F FFF    F F                         E
     007-06   P1038P  B2 FUEL PUMP DISCH PRESS             111  1 111
     024-     P1038P  B2 FUEL PUMP DISCH PRESS                  1 1      1 1
     034-00   P1038P  B2 FUEL PUMP DISCH PRESS               1      1
     037-03   P1038P  B2 FUEL PUMP DISCH PRESS               1      1
```

```
OSTF 2 REC ASSIGNMNT 26 SEP 62     AE60-0653          123 123456 1234 123456 1 12345                    075

                P1039P  B1 FUEL PUMP DISCH                      FFF  F FFF     F F                        E
007-06          P1039P  B1 FUEL PUMP DISCH PRESS                111  1 111
024-            P1039P  B1 FUEL PUMP DISCH PRESS                     1 1       1 1
034-00          P1039P  B1 FUEL PUMP DISCH PRESS                  1       1
037-03          P1039P  B1 FUEL PUMP DISCH PRESS                  1       1

                P1056P  SUS LOX PUMP INLET PRESS                  F  F F F     F F                        E
024-            P1056P  SUS LOX PUMP INLET PRESS                     1 1       1 1
034-00          P1056P  SUS LOX PUMP INLET PRESS                  1       1
037-03          P1056P  SUS LOX PUMP INLET PRESS                  1       1

                P1059P  B2 THR CHAMBER PRESS                      D       D                                E
                P1059P  B2 THR CHAMBER PRESS                      F       F
034-00          P1059P  B2 THR CHAMBER PRESS                      1       1
037-03          P1059P  B2 THR CHAMBER PRESS                      1       1

                P1060P  B1 THR CHAMBER PRESS                      D       D                                E
                P1060P  B1 THR CHAMBER PRESS                      F       F
034-00          P1060P  B1 THR CHAMBER PRESS                      1       1
037-03          P1060P  B1 THR CHAMBER PRESS                      1       1

                P1091P  B1 LOX INJ MANIFOLD PRESS                 F       F                                E
034-00          P1091P  B1 LOX INJ MANIFOLD PRESS                 1       1
037-03          P1091P  B1 LOX INJ MANIFOLD PRESS                 1       1

                P1092P  B2 LOX INJ MANIFOLD PRESS                 F       F                                E
034-00          P1092P  B2 LOX INJ MANIFOLD PRESS                 1       1
037-03          P1092P  B2 LOX INJ MANIFOLD PRESS                 1       1

                P7105P  TCU CTL MANIFOLD                FFFFF                                              E
010-03          P7105P  TCU CTL MANIFOLD PRESS          11111
010-07          P7105P  TCU CTL MANIFOLD PRESS          11111

                P7106P  TCU INLET LOX PRESS             FFFFF                                              E
010-03          P7106P  TCU LOX IN PRESS                11111
010-07          P7106P  TCU LOX IN PRESS                11111

                P7107P  TCU LOX FILTER IN               FFFFF                                              E
010-03          P7107P  TCU LOX FILTER IN PRESS         11111
010-07          P7107P  TCU LOX FILTER IN PRESS         11111

                P7108P  LOX L/P DISC IN PRES            FFFFF  FFF  F FFF     F FF                         E
010-03          P7108P  LOX L/P DISCON IN PRESS         11111  111  1 111     1 11
010-06          P7108P  LOX L/P DISCON IN PRESS         11111
010-07          P7108P  LOX L/P DISCON IN PRESS         11111
010-08          P7108P  LOX L/P DISCON IN PRESS         11111  111
                P7108P  LOX L/P DISC IN PRESS                       1 1       1 1

                P7135P  MAIN LOX LN DRAIN PR            FFFFF                                              E
                P7135P  MAIN LOX LINE DRAIN PRESS       11111

                P1155P  B1 GAS GEN COMBUSTOR PRESS                F       F                                E
034-00          P1155P  B1 GAS GEN COMBUSTOR PRESS                1       1
037-03          P1155P  B1 GAS GEN COMBUSTOR PRESS                1       1

                P1184P  B2 GAS GEN COMBUSTOR PRESS                F       F                                E
034-00          P1184P  B2 GAS GEN COMBUSTOR PRESS                1       1
037-03          P1184P  B2 GAS GEN COMBUSTOR PRESS                1       1
```

```
OSTF 2 REC ASSIGNMNT 26 SEP 62    AE60-0653          123 123456 1234 123456 1 12345                026

            P1200P  ENG COMPT AMB PRESS                        F                                    E
034-00      P1200P  ENG COMPT AMB PRESS                        1
037-01      P1200P  ENG COMPT AMB PRESS                        1

            P1337P  SGG LOX INJ MANIFOLD PRESS                 F      F                             E
034-00      P1337P  SGG LOX INJ MANIFOLD SRESS                 1      1
037-03      P1337P  S GG LOX INJ MANIFOLD PRESS                1      1

            P1351P  SUS LUBE OIL MANIFOLD PRESS                F      F                             E
034-00      P1351P  S LOX INJ MANIFOLD PRESS                   1      1
037-03      P1351P  S LOX INJ MANIFOLD PRESS                   1      1

            P1463P  S GG FUEL INJ MAN PRESS                    F                                    E
034-00      P1463P  S GG FUEL INJ MAN PRESS                    1
037-03      P1463P  S GG FUEL INJ MAN PRESS                    1

            P7546P  GN2 STORAGE TK DISCH              FFFFF                                         I
001-12      P7546P  GN2 STOR TK DISCH PRESS
010-03      P7546P  GN2 STOR TK DISCH PRESS           11111

            P7549P  LOX STORAGE TANK ULL          S   SSSSS  SSS  S SSS    S SS                     E
001-03      P7549P  LOX STOR TK ULLAGE PRESS      1
007-05      P7549P  LOX STOR TK ULLAGE PRESS          111    111  1 111    1 11
010-01      P7549P  LOX STOR TK ULLAGE PRESS          11111  111  1 111    1 11
010-02      P7549P  LOX STOR TK ULLAGE PRESS          11111  111  1 111    1 11
010-03      P7549P  LOX STOR TK ULLAGE PRESS          11111  111  1 111    1 11
010-04      P7549P  LOX STOR TK ULLAGE PRESS          11111  111  1 111    1 11
010-06      P7549P  LOX STOR TK ULLAGE PRESS          11111  111  1 111    1 11
010-07      P7549P  LOX STOR TK ULLAGE PRESS          11111
024-        P7549P  LOX STOR TK ULLAGE PRESS                      1 1      1 1
099-00      P7549P  LOX STOR TK ULLAGE PRESS          11111  111  1 111    1 11

            P7564P  LOX ST TK TO MSL DP               SSSSS  SSS  S SSS    S SS                     E
007-05      P7564P  LOX STOR TK TO MSL DP             111    111  1 111    1 11
010-01      P7564P  LOX STOR TK TO MSL DP             11111
010-03      P7564P  LOX STOR TK TO MSL DP             11111  111  1 111    1 11
010-04      P7564P  LOX STOR TK TO MSL DP             11111  111  1 111    1 11
010-06      P7564P  LOX STOR TK TO MSL DP             11111
010-07      P7564P  LOX STOR TK TO MSL DP             11111
099-00      P7564P  LOX STOR TK-MSL DP                11111  111  1 111    1 11

            P7565P  LOX XFER LINE TO MSL              FFFFF                                         E
010-01      P7565P  LOX XFER LINE TO MSL PRESS        11111
010-03      P7565P  LOX XFER LINE TO MSL PRESS        11111
010-06      P7565P  LOX XFER LINE TO MSL PRESS        11111
010-07      P7565P  LOX XFER LINE TO MSL PRESS        11111

            P7567P  FUEL TANK ULLAGE PRESS                                                          E
011-01      P7567P  FUEL LVL TANK ULLAGE PRESS
011-05      P7567P  FUEL LVL TANK ULLAGE PRESS

            P7578P  LOX IN TO ELEV DISC               FFFFF  FFF                                    E
010-01      P7578P  LOX TO L/P DISCON IN PRESS        11111
010-03      P7578P  LOX TO L/P DISCON IN PRESS        11111  111
010-06      P7578P  LOX TO L/P DISCON IN PRESS        11111
010-07      P7578P  LOX TO L/P DISCON IN PRESS        11111
010-08      P7578P  LOX TO L/P DISCON IN PRESS        11111

            P7682P  DP ON LOX TANK                    SSSSS                                         E
010-01      P7682P  MSL LOX TANK DP                   11111
```

```
OSTF 2 REC ASSIGNMNT 26 SEP 62    AE60-0653          123 123456 1234 123456 1 12345                027

     010-03   P7682P  MSL LOX TANK DP                  11111
     010-04   P7682P  MSL LOX TANK DP                  11111
     010-06   P7682P  MSL LOX TK DP                    11111
     010-07   P7682P  MSL LOX TANK DP                  11111

              P7688P  GND FUEL PUMP OUT PRESS                                                          E
     011-04   P7688P  GND FUEL PUMP OUT PRESS

              P7689P  GND FUEL PUMP IN PRESS                                                           E
     011-04   P7689P  GND FUEL PUMP IN PRESS

              P7690P  GND FUEL FILTER DP                                                               E
     011-01   P7690P  GND FUEL FILTER DP

              P7691P  FUEL FILL LINE IN PRESS                                                          E
     011-01   P7691P  FUEL FILL LINE IN PRESS
     011-04   P7691P  FUEL FILL LINE IN PRESS
     011-05   P7691P  FUEL FILL LINE IN PRESS

              P7692P  FUEL FILL LINE PRESS @ L/P                                                       E
     011-01   P7692P  FILL LINE PRESS-L/P DISCON
     011-04   P7692P  FILL LINE PRESS-L/P DISCON
     011-05   P7692P  FILL LINE PRESS-L/P DISCON

              P7693P  FUEL FILL LINE PRESS @ ROD                                                       E
     011-01   P7693P  FILL LINE PRESS @ R-O-D
     011-04   P7693P  FILL LINE PRESS @ R-O-D
     011-05   P7693P  FILL LINE PRESS @ R-O-D

              P7696P  LOX TOP LINE ROD                 SSSSS                                           E
     010-01   P7696P  LOX TOP LINE PRESS @ R-O-D       11111
     010-03   P7696P  LOX TOP LINE PRESS @ R-O-D       11111
     010-06   P7696P  LOX TOP LINE PRESS @ R-O-D       11111
     010-07   P7696P  LOX TOP LINE PRESS @ R-O-D       11111

              P7697P  MAIN LOX LINE @ ROD              FFFFF                                           E
     010-01   P7697P  MAIN LINE PRESS @ R-O-D          11111
     010-03   P7697P  MAIN LINE PRESS @ R-O-D          11111
     010-06   P7697P  MAIN LINE PRESS @ R-O-D          11111

              P7699P  MAIN LOX FILTER DP               DDDDD  DDD  D DDD                               E
     010-01   P7699P  MAIN LOX FILTER DP               11111
     010-03   P7699P  MAIN LOX FILTER DP               11111  111  1 111
     010-06   P7699P  MAIN LOX FILTER DP               11111

              P7700P  LOX RAPID LD VLV DP              FFFFF                                           E
     010-01   P7700P  LOX RAPID LD VLV DP              11111
     010-03   P7700P  LOX RAPID LD VLV DP              11111
     010-06   P7700P  LOX RAPID LOAD VLV DP            11111

              P7701P  LOX FINE LD VLV DP               FFFFF                                           E
     010-01   P7701P  LOX FINE LD VLV DP               11111
     010-03   P7701P  LOX FINE LD VLV DP               11111
     010-06   P7701P  LOX FINE LOAD VLV DP             11111

              P7706P  LOX DRAIN VLV DP                 FFFFF                                           E
     010-03   P7706P  LOX DRAIN VLV DP                 11111

              P7707P  LOX FILL FILTER DP               FFFFF                                           E
```

```
OSTF 2 REC ASSIGNMNT 26 SEP 62    AE60-0653          123 123456 1234 123456 1 12345                028

     010-03   P7707P  LOX FILL FILTER DP                11111

              P7709P  LOX TOP TK ULLAGE                 SSSSS  SSS  S SSS    S SS                    E
              P7709P  LOX TOP TK ULLAGE                 FFFFF  FFF  F FFF    F FF
     007-05   P7709P  LOX TOP TK ULLAGE PRESS           111    111  1 111    1 11
     010-02   P7709P  LOX TOP TK ULLAGE PRESS           11111  111  1 111    1 11
     010-03   P7709P  LOX TOP TK ULLAGE PRESS           11111  111  1 111    1 11
     010-04   P7709P  LOX TOP TK ULLAGE PRESS           11111  111
     010-06   P7709P  LOX TOP TK ULLAGE PRESS           11111
     010-07   P7709P  LOX TOP TK ULLAGE PRESS           11111
     024-     P7709P  LOX TOP TK ULLAGE PRESS                        1 1      1 1
     099-00   P7709P  LOX TOP TK ULLAGE PRESS           11111  111  1 111    1 11

              P7710P  GND LOX TK PRESS LN               FFFFF                                         E
     010-03   P7710P  LOX STOR TK PRESN LINE            11111

              P7711P  LOX TOP TK PRESS LN               FFFFF                                         E
     010-03   P7711P  LOX TOP TK PRESN LINE             11111

              P7907P  B1 LOX PUMP INLET                 SSSSS                                         E
     010-03   P7907P  B1 LOX PUMP IN PRESS              11111
     010-06   P7907P  B1 LOX PUMP IN PRESS              11111

              P7909P  FUEL VLV F1 IN PRESS                                                            E
     011-01   P7909P  FUEL VLV F1 IN PRESS
     011-04   P7909P  FUEL VLV F1 INLET PRESS
     011-05   P7909P  FUEL VLV F1 INLET PRESS

              P7911P  FUEL PRESN TK DISCH PRESS                                                       E
     011-05   P7911P  FUEL PRESN TK DISCH PRESS

              P7913P  LOX FINE LV L1 IN                 BBBBB  BBB
              P7913P  LOX FINE LV L1 IN                 FFFFF  FFF                                    E
     010-01   P7913P  LOX FINE LD IN PRESS                     111
     010-03   P7913P  FINE LD VLV L1 IN PRESS           11111  111
     010-06   P7913P  LOX FINE LD VLV L-1 IN            11111

              P7914P  LOX RAPID LV L2 IN                FFFFF                                         E
     010-03   P7914P  RAPID LD VLV L2 IN PRESS          11111
     010-06   P7914P  LOX RAPID LD VLV L-2 IN           11111
     010-07   P7914P  RAPID LD VLV L-2 IN PRESS         11111

              P7915P  LOX DRAIN VLV L16 IN              FFFFF                                         E
     010-03   P7915P  LOX DRAIN VLV L16 IN PRESS        11111

              P7916P  LOX DRAIN VLV L-16 OUT PRES              F                                      E
     010-01   P7916P  LOX DRAIN VLV L-16 OUT PRES              1

              P7917P  LOX STOR TK FV L7 IN              FFFFF                                         E
     010-03   P7917P  LOX STOR TK FILL VLV L7 IN        11111

              P7972P  LOX TK PRESS VLV IN               FFFFF                                         E
     010-03   P7972P  STOR TK PRESN VLV IN PRESS        11111

              P7104R  LOX TOP FL/RT VNTURI              DDDDD  DDD
              P7104R  LOX TOP FL/RT VNTURI              FFFFF  FFF                                    E
     010-01   P7104R  LOX TOP FL/RT VENTURI             11111
```

```
OSTF 2 REC ASSIGNMNT 26 SEP 62    AE60-0653          123 123456 1234 123456 1 12345                029

     010-03   P7104R  LOX TOP FL/RT VENTURI            11111  111
     010-04   P7104R  LOX TOPPING FL/RT VENTURI        11111  111
     010-06   P7104R  LOX TOPPING FL/RT VENTURI        11111
     010-07   P7104R  LOX TOPPING FL/RT VENTURI        11111

              P7109R  LOX TOP BLEED FL/RT              BBBBB  BBB
              P7109R  LOX TOP BLEED FL/RT              FFFFF  FFF                                  E
     010-01   P7109R  LOX TOP BLEED FL/RT              11111
     010-03   P7109R  LOX TOP BLEED FL/RT              11111  111
     010-04   P7109R  LOX TOPPING BLEED FL/RT          11111  111
     010-06   P7109R  LOX TOPPING BLEED FL/RT          11111
     010-07   P7109R  LOX TOPPING BLEED FL/RT          11111

              P7569R  GND FUEL SUPPLY FL/RT                                                         E
     011-01   P7569R  GND FUEL SUPPLY FL/RT
     011-04   P7569R  GND FUEL SUPPLY FL/RT

              P7113T  TCU LOX IN TEMP                  SSSSS                                        E
     010-03   P7113T  TCU LOX INLET TEMP               11111
     010-06   P7113T  TCU LOX IN TEMP                  11111
     010-07   P7113T  TCU LOX INLET TEMP               11111

              P7114T  LOX TOP L/P DISC IN              SSSSS                                        E
     010-01   P7114T  LOX TOP L/P DISCON IN TEMP       11111
     010-03   P7114T  LOX TOP L/P DISCON IN TEMP       11111
     010-06   P7114T  LOX TOP TEMP @ L/P DISCON        11111
     010-07   P7114T  LOX TOP L/P DISCON IN TEMP       11111
     010-08   P7114T  LOX TOP L/P DISCON IN TEMP       11111

              P7134T  B1 LOX PUMP INLET                SSSSS                                        E
     010-01   P7134T  B1 LOX PUMP IN TEMP              11111
     010-03   P7134T  B1 LOX PUMP IN TEMP              11111
     010-06   P7134T  B1 LOX PUMP IN TEMP              11111
     010-07   P7134T  B1 LOX PUMP IN TEMP              11111

              P7304T  SUS LOX PUMP INLET               SSSSS                                        E
     010-01   P7304T  SUS LOX PUMP IN TEMP             11111
     010-03   P7304T  SUS LOX PUMP IN TEMP             11111
     010-06   P7304T  SUS LOX PUMP IN TEMP             11111
     010-07   P7304T  SUS LOX PUMP IN PRESS            11111

              P7305T  B2 LOX PUMP INLET                SSSSS                                        E
     010-01   P7305T  B2 LOX PUMP IN TEMP              11111
     010-03   P7305T  B2 LOX PUMP IN TEMP              11111
     010-06   P7305T  B2 LOX PUMP IN TEMP              11111
     010-07   P7305T  B2 LOX PUMP IN PRESS             11111

              P1325T  ENG COMPT AMB TEMP                        S  S S S    S S
              P1325T  ENG COMPT AMB TEMP                        F  F F F    F F                     E
     024-     P1325T  ENG COMPT AMP TEMP                           1 1      1 1
     034-00   P1325T  ENG COMPT AMB TEMP                        1      1
     037-01   P1325T  ENG COMPT AMB TEMP                        1      1

              P1530T  S LOX PUMP INLET                        BBB  B BBB    B B                     E
              P1530T  S LOX PUMP INLET TEMP                   SSS  S SSS    S S
     007-06   P1530T  S LOX PUMP INLET TEMP                   111  1 111
     024-     P1530T  SUS LOX PUMP INLET TEMP                      1 1      1 1
     034-00   P1530T  SUS LOX PUMP INLET TEMP                    1      1
     037-03   P1530T  SUS LOX PUMP INLET TEMP                    1      1

              P7547T  GN2 STORAGE TK DISCH             FFFFF                                        E
```

```
OSTF 2 REC ASSIGNMNT 26 SEP 62    AE60-0653        123 123456 1234 123456 1 12345                    030

     001-12   P7547T  GN2 STOR TK DISCH TEMP
     010-03   P7547T  GN2 STOR TK DISCH TEMP          11111

              P7566T  FUEL LINE TO MSL TEMP                                                            E
     011-01   P7566T  FUEL LINE TO MSL TEMP
     011-02   P7566T  FUEL LINE TO MSL TEMP
     011-08   P7566T  FUEL LINE TO MSL TEMP

              P7571T  MAIN LOX IN @ DISC              SSSSS  SSS                                       E
     010-01   P7571T  MAIN LINE TEMP-L/P DISCON       11111  111
     010-03   P7571T  MAIN LINE TEMP-L/P DISCON       11111
     010-07   P7571T  MAIN LINE TEMP-L/P DISCON       11111
     010-08   P7571T  MAIN LINE TEMP-L/P DISCON       11111

              P7572T  MSL TANK FUEL TEMP                                                               E
     011-01   P7572T  MSL TANK FUEL TEMP
     011-02   P7572T  MSL TANK FUEL TEMP
     011-05   P7572T  MSL TANK FUEL PRESS
     011-08   P7572T  MISSILE TANK FUEL TEMP

              P7698T  MAIN LOX LINE @ ROD             SSSSS                                            E
     010-01   P7698T  MAIN LOX LINE TEMP @ R-O-O      11111
     010-03   P7698T  MAIN LOX LINE TEMP @ R-O-O      11111
     010-06   P7698T  MAIN LOX LINE TEMP @ R-O-O      11111
     010-07   P7698T  MAIN LOX LINE TEMP @ R-O-O      11111

              P7702T  LOX TOP LINE ROD                SSSSS                                            E
     010-01   P7702T  LOX TOP LINE TEMP @ R-O-O       11111
     010-03   P7702T  LOX TOP LINE TEMP @ R-O-O       11111
     010-06   P7702T  LOX TOP LINE TEMP @ R-O-O       11111
     010-07   P7702T  LOX TOP LINE TEMP @ R-O-O       11111

              P1711T  B1 NACELLE AMB TEMP                      O  O O O    O O
              P1711T  B1 NACELLE AMB TEMP                      P  P P P    P P                         E
     024-     P1711T  B1 NACELLE AMB TEMP                         1 1      1 1
     034-00   P1711T  B1 NACELLE AMB TEMP                      1      1
     037-01   P1711T  B1 NACELLE AMB TEMP                      1      1

              P1712T  B2 NACELLE AMB TEMP                      O  O O O    O O
              P1712T  B2 NACELLE AMB TEMP                      P  P P P    P P                         E
     024-     P1712T  B2 NACELLE AMB TEMP                         1 1      1 1
     034-00   P1712T  B2 NACELLE AMB TEMP                      1      1
     037-01   P1712T  B2 NACELLE AMB TEMP                      1      1

              P7802T  SKIN B1 HYPRGOL CTL          P                                                   E
     001-02   P7802T  SKIN B1 HYPERGOL CTL          2

              P7803T  SKIN B2 HYPRGOL CTL          P                                                   E
     001-02   P7803T  SKIN B2 HYPERGOL CTL          2

              P7806T  SKIN S HYPRGOL CTL           P                                                   E
     001-02   P7806T  SKIN SUS HYPERGOL CTL         2

              P7812T  AMB S HYD CTL MAN            O                                                   E
     001-02   P7812T  AMB SUS HYD CTL MAN           2

              P7813T  AMB QUAD 4 STA 1205          O                                                   E
     001-02   P7813T  AMB QUAD 4 STA 1205           1
```

```
OSTF 2 REC ASSIGNMNT 26 SEP 62     AE60-0653          123 123456 1234 123456 1 12345                031

                P7814T  AMB QUAD 3 STA 1175          D                                                E
      001-02    P7814T  AMB QUAD 3 STA 1175          1

                P7815T  AMB QUAD 2 STA 1245          D                                                E
      001-02    P7815T  AMB QUAD 2 STA 1245          1

                P7816T  AMB QUAD 1 STA 1248          D                                                E
      001-02    P7816T  AMB QUAD 1 STA 1248          1

                P7817T  AMB B1 NAC STA 1245          D                                                E
      001-02    P7817T  AMB B1 NAC STA 1245          1

                P7818T  AMB B2 NAC STA 1245          S                                                E
      001-02    P7818T  AMB B2 NAC STA 1245          1

                P7819T  AMB QUAD 2 STA 1234          S                                                E
      001-02    P7819T  AMB QUAD 2 STA 1234          1

                P7820T  AMB B2 NAC STA 1156          S                                                E
      001-02    P7820T  AMB B2 NAC STA 1156          1

                P7821T  AMB B1 NAC STA 1156          S                                                E
      001-02    P7821T  AMB B1 NAC STA 1156          1

                P7822T  AMB B1 FUL CTL VLV           S                                                E
      001-02    P7822T  AMB B1 FUEL CTL VLV          1

                P7823T  AMB B2 FUL CTL VLV           S                                                E
      001-02    P7823T  AMB B2 FUEL CTL VLV          1

                P7824T  AMB QUAD 4 STA 1260          S                                                E
      001-02    P7824T  AMB QUAD 4 STA 1260          1

                P7825T  SKIN B1 NAC STA 1220         S                                                E
      001-02    P7825T  SKIN B1 NAC STA 1220         1

                P7826T  SKIN B2 NAC STA 1220         S                                                E
      001-02    P7826T  SKIN B2 NAC STA 1220         1

                P7827T  SKIN X AXIS STA 1200         S                                                E
      001-02    P7827T  SKIN X AXIS STA 1200         1

                P7908T  FUEL PRESN TK DISCH TEMP                                                       E
      011-02    P7908T  FUEL PRESN TK DISCH TEMP

                P7126V  S IGN STAGE CTL VOLT                     FFF                                   E
      007-06    P7126V  S IGN STAGE CTL VOLT                     111

                P7115X  RAPID TOP VLV OPEN                 RRRRR  RRR  R RRR    R RR
      007-05    P7115X  RAPID TOP VLV OPEN                 111    111  1 111    1 11
      010-01    P7115X  RAPID TOP VLV OPEN                 11111  111  1 111    1 11
      010-02    P7115X  RAPID TOP VLV OPEN                 11111  111  1 111    1 11
      010-04    P7115X  RAPID TOP VLV OPEN                 11111  111  1 111    1 11
      010-07    P7115X  RAPID TOP VLV OPEN                 11111
      024-      P7115X  RAPID TOP VLV OPEN                              1 1      1 1
```

```
OSTF 2 REC ASSIGNMNT 26 SEP 62    AE60-0653          123 123456 1234 123456 1 12345                032

          P7116X  RAPID TOP VLV CLSD                 RRRRR  R R RR RRR    R RR
007-05    P7116X  RAPID TOP VLV CLSD                 111    111  1 111    1 11
010-01    P7116X  RAPID TOP VLV CLSD                 11111  111  1 111    1 11
010-02    P7116X  RAPID TOP VLV CLSD                 11111  111  1 111    1 11
010-04    P7116X  RAPID TOP VLV CLSD                 11111  111  1 111    1 11
010-07    P7116X  RAPID TOP VLV CLSD                 11111
024-      P7116X  RAPID TOP VLV CLSD                             1 1      1 1

          P7117X  TOPPING VLV OPEN                   RRRRR  R R RR RRR    R RR
007-05    P7117X  TOPPING VLV OPEN                   111    111  1 111    1 11
010-01    P7117X  TOPPING VLV OPEN                   11111  111  1 111    1 11
010-02    P7117X  TOPPING VLV OPEN                   11111  111  1 111    1 11
010-04    P7117X  TOPPING VLV OPEN                   11111  111  1 111    1 11
010-07    P7117X  TOPPING VLV OPEN                   11111
024-      P7117X  TOPPING VLV OPEN                             1 1      1 1

          P7118X  TOPPING VLV CLSD                   RRRRR  R R RR RRR    R RR
007-05    P7118X  TOPPING VLV CLSD                   111    111  1 111    1 11
010-01    P7118X  TOPPING VLV CLSD                   11111  111  1 111    1 11
010-02    P7118X  TOPPING VLV CLSD                   11111  111  1 111    1 11
010-04    P7118X  TOPPING VLV CLSD                   11111  111  1 111    1 11
010-07    P7118X  TOPPING VLV CLSD                   11111
024-      P7118X  TOPPING VLV CLSD                             1 1      1 1

          P7129X  VENT VLV N-80 OPEN                 RRRRR  RRR  R RRR    R RR
010-01    P7129X  VENT VLV N80 OPEN                  11111  111  1 111    1 11
010-02    P7129X  VENT VLV N80 OPEN                  11111  111  1 111    1 11

          P7130X  VENT VLV N-80 CLSD                 RRRRR  RRR  R RRR    R RR
010-01    P7130X  VENT VLV N80 CLSD                  11111  111  1 111    1 11
010-02    P7130X  VENT VLV N80 CLSD                  11111  111  1 111    1 11

          P7131X  LN DRN PRES N60 OPEN               RRRRR  RRR  R RRR    R RR
010-01    P7131X  LOX DRAIN VLV N60 OPEN             11111  111  1 111    1 11
010-02    P7131X  LOX DRAIN VLV N60 OPEN             11111  111  1 111    1 11

          P7132X  LN DRN PRES N60 CLSD               RRRRR  RRR  R RRR    R RR
010-01    P7132X  LOX DRAIN VLV N60 CLSD             11111  111  1 111    1 11
010-02    P7132X  LOX DRAIN VLV N60 CLSD             11111  111  1 111    1 11

          P7193X  LOX TOPG TK VV OPEN                RRRRR  RRR  R RRR    R RR
010-01    P7193X  LOX TOP TK VENT VLV OPEN           11111  111  1 111    1 11
010-02    P7193X  LOX TOP TK VENT VLV OPEN           11111  111  1 111    1 11
010-03    P7193X  LOX TOP TK VENT VLV OPEN           11111  111  1 111    1 11
010-07    P7193X  LOX TOP TK VENT VLV OPEN           11111
024-      P7193X  LOX TOP TK VENT VLV OPEN                       1 1      1 1

          P7194X  LOX TOPG TK VV CLSD                RRRRR  RRR  R RRR    R RR
010-01    P7194X  LOX TOP TK VENT VLV CLSD           11111  111  1 111    1 11
010-02    P7194X  LOX TOP TK VENT VLV CLSD           11111  111  1 111    1 11
010-03    P7194X  LOX TOP TK VENT VLV CLSD           11111  111  1 111    1 11
010-07    P7194X  LOX TOP TK VENT VLV CLSD           11111
024-      P7194X  LOX TOP TK VENT VLV CLSD                       1 1      1 1

          P7195X  FUEL VLV F4 OPEN
011-04    P7195X  FUEL VLV F4 OPEN
011-05    P7195X  FUEL VLV F4 OPEN

          P7196X  FUEL VLV F4 CLSD
011-04    P7196X  FUEL VLV F4 CLSD
011-05    P7196X  FUEL VLV F4 CLSD
```

```
OSTF 2 REC ASSIGNMNT 26 SEP 62    AE60-0653          123 123456 1234 123456 1 12345                033

          P7223X  LOX STOR TK VV CLSD                RRRRR  RRR  R RRR    R RR
010-01    P7223X  LOX STOR TK VENT VLV CLSD          11111  111  1 111    1 11
010-02    P7223X  LOX STOR TK VENT VLV CLSD          11111  111  1 111    1 11
010-03    P7223X  LOX STOR TK VENT VLV CLSD          11111  111  1 111    1 11
010-07    P7223X  LOX STOR TK VENT VLV CLSD          11111

          P7225X  LOX RAPID LV OPEN                  RRRRR  RRR  R RRR    R RR
007-05    P7225X  LOX RAPID LD VLV OPEN              111    111  1 111    1 11
010-01    P7225X  LOX RAPID LD VLV OPEN              11111  111  1 111    1 11
010-02    P7225X  LOX RAPID LD VLV OPEN              11111  111  1 111    1 11
010-04    P7225X  LOX RAPID LD VLV OPEN              11111  111  1 111    1 11
010-06    P7225X  LOX RAPID LD VLV OPEN                     111  1 111    1 11
010-07    P7225X  LOX RAPID LD VLV OPEN              11111
024-      P7225X  LOX RAPID LD VLV OPEN                          1 1      1 1

          P7226X  LOX FINE LV OPEN                   RRRRR  RRR  R RRR    R RR
007-05    P7226X  LOX FINE LD VLV OPEN               111    111  1 111    1 11
010-01    P7226X  LOX FINE LD VLV OPEN               11111  111  1 111    1 11
010-02    P7226X  LOX FINE LD VLV OPEN               11111  111  1 111    1 11
010-04    P7226X  LOX FINE LD VLV OPEN               11111  111  1 111    1 11
010-06    P7226X  LOX FINE LD VLV OPEN                     111  1 111    1 11
010-07    P7226X  LOX FINE LD VLV OPEN               11111
024-      P7226X  LOX FINE LD VLV OPEN                          1 1      1 1

          P7227X  LOX RAPID LV CLSD                  RRRRR  RRR  R RRR    R RR
007-05    P7227X  LOX RAPID LD VLV CLSD              111    111  1 111    1 11
010-01    P7227X  LOX RAPID LD VLV CLSD              11111  111  1 111    1 11
010-02    P7227X  LOX RAPID LD VLV CLSD              11111  111  1 111    1 11
010-04    P7227X  LOX RAPID LD VLV CLSD              11111  111  1 111    1 11
010-06    P7227X  LOX RAPID LD VLV CLSD                     111  1 111    1 11
010-07    P7227X  LOX RAPID LD VLV CLSD              11111
024-      P7227X  LOX RAPID LD VLV CLSD                          1 1      1 1

          P7228X  LOX FINE LV CLSD                   RRRRR  RRR  R RRR    R RR
007-05    P7228X  LOX FINE LD VLV CLSD               111    111  1 111    1 11
010-01    P7228X  LOX FINE LD VLV CLSD               11111  111  1 111    1 11
010-02    P7228X  LOX FINE LD VLV CLSD               11111  111  1 111    1 11
010-04    P7228X  LOX FINE LD VLV CLSD               11111  111  1 111    1 11
010-07    P7228X  LOX FINE LD VLV CLSD               11111
024-      P7228X  LOX FINE LD VLV CLSD                          1 1      1 1

          P7236X  LOX STOR TK VV OPEN                RRRRR  RRR  R RRR    R RR
010-01    P7236X  LOX STOR TK VENT VLV OPEN          11111  111  1 111    1 11
010-02    P7236X  LOS STOR TK VENT VLV OPEN          11111  111  1 111    1 11
010-03    P7236X  LOX STOR TK VENT VLV OPEN          11111  111  1 111    1 11
010-07    P7236X  LOX STOR TK VENT VLV OPEN          11111

          P7238X  LOX DRAIN VALVE OPEN               RRRRR  RRR  R RRR    R RR
010-02    P7238X  LOX DRAIN VLV OPEN                 11111  111  1 111    1 11
024-      P7238X  LOX DRAIN VLV OPEN                            1 1      1 1

          P7240X  LOX DRAIN VALVE CLSD               RRRRR  RRR  R RRR    R RR
010-02    P7240X  LOX DRAIN VLV CLSD                 11111  111  1 111    1 11
024-      P7240X  LOX DRAIN VLV CLSD                            1 1      1 1

          P7241X  LOX CHILLDWN VLV N-1 CLSD                 RRR  R RRR    R RR
010-01    P7241X  LOX CHILLDWN VLV N-1 CLSD                 111  1 111    1 11

          P7251X  LOX CHILLDWN VLV N-2 CLSD                 RRR
010-01    P7251X  LOX CHLDN VLV N2 CLSD                     111
010-02    P7251X  LOX CHLDN VLV N2 CLSD                     111

          P7252X  LOX CHILLDWN VLV N-3 CLSD                 RRR
```

```
OSTF 2 REC ASSIGNMNT 26 SEP 62    AE60-0653          123 123456 1234 123456 1 12345                034

     010-01   P7252X  LOX CHLDN VLV N3 CLSD                    111
     010-02   P7252X  LOX CHLDN VLV N3 CLSD                    111

              P7253X  LOX CHILLDWN VLV N50 CLSD                RRR
     010-01   P7253X  LOX CHLDN VLV N50 CLSD                   111
     010-02   P7253X  LOX CHLDN VLV N50 CLSD                   111

              P7922X  FUEL VLV F1 OPEN
     011-01   P7922X  FUEL VLV F1 OPEN
     011-02   P7922X  FUEL VLV F1 OPEN
     011-04   P7922X  FUEL VLV F1 OPEN
     011-05   P7922X  FUEL VLV F1 OPEN

              P7923X  FUEL VLV F1 CLSD
     011-01   P7923X  FUEL VLV F1 CLSD
     011-02   P7923X   FUEL VLV F1 CLSD
     011-04   P7923X  FUEL VLV F1 CLSD
     011-05   P7923X  FUEL VLV F1 CLSD

              P7924X  FUEL VLV F2 OPEN
     011-01   P7924X  FUEL VLV F2 OPEN
     011-02   P7924X  FUEL VLV F2 OPEN
     011-04   P7924X  FUEL VLV F2 OPEN
     011-05   P7924X  FUEL VLV F2 OPEN

              P7925X  FUEL VLV F2 CLSD
     011-01   P7925X  FUEL VLV F2 CLSD
     011-02   P7925X  FUEL VLV F2 CLSD
     011-04   P7925X  FUEL VLV F2 CLSD
     011-05   P7925X  FUEL VLV F2 CLSD

              P7926X  FUEL VLV F3 OPEN
     011-01   P7926X  FUEL VLV F3 OPEN
     011-02   P7926X  FUEL VLV F3 OPEN
     011-04   P7926X  FUEL VLV F3 OPEN
     011-05   P7926X  FUEL VLV F3 OPEN

              P7927X  FUEL VLV F3 CLSD
     011-01   P7927X  FUEL VLV F3 CLSD
     011-02   P7927X  FUEL VLV F3 CLSD
     011-04   P7927X  FUEL VLV F3 CLSD
     011-05   P7927X  FUEL VLV F3 CLSD

              P7928X  FUEL VLV NF4 OPEN
     011-01   P7928X  FUEL VLV NF4 OPEN
     011-02   P7928X  FUEL VLV NF4 OPEN
     011-04   P7928X  FUEL VLV NF4 OPEN
     011-05   P7928X  FUEL VLV NF4 OPEN

              P7929X  FUEL VLV NF4 CLSD
     011-01   P7929X  FUEL VLV NF4 CLSD
     011-02   P7929X  FUEL VLV NF4 CLSD
     011-04   P7929X  FUEL VLV NF4 CLSD
     011-05   P7929X  FUEL VLV NF4 CLSD

              P7930X  FUEL VLV NF1 OPEN
     011-01   P7930X  FUEL VLV NF1 OPEN
     011-02   P7930X  FUEL VLV NF1 OPEN
     011-04   P7930X  FUEL VLV NF1 OPEN
     011-05   P7930X  FUEL VLV NF1 OPEN

              P7931X  FUEL VLV NF1 CLSD
```

```
OSTF 2 REC ASSIGNMNT 26 SEP 62    AE60-0653          123 123456 1234 123456 1 12345                    035

011-01   P7931X  FUEL VLV NF1 CLSD
011-02   P7931X  FUEL VLV NF1 CLSD
011-04   P7931X  FUEL VLV NF1 CLSD
011-05   P7931X  FUEL VLV NF1 CLSD

         P7932X  FUEL VLV NF2 OPEN
011-01   P7932X  FUEL VLV NF2 OPEN
011-02   P7932X  FUEL VLV NF2 OPEN
011-04   P7932X  FUEL VLV NF2 OPEN
011-05   P7932X  FUEL VLV NF2 OPEN

         P7933X  FUEL VLV NF2 CLSD
011-01   P7933X  FUEL VLV NF2 CLSD
011-02   P7933X  FUEL VLV NF2 CLSD
011-04   P7933X  FUEL VLV NF2 CLSD
011-05   P7933X  FUEL VLV NF2 CLSD

         P7934X  FUEL A/B F&D VLV OPEN
011-01   P7934X  FUEL A/B F&D VLV OPEN
011-02   P7934X  FUEL A/B F&D VLV OPEN
011-04   P7934X  FUEL A/B F&D VLV OPEN
011-05   P7934X  FUEL A/B F&D VLV OPEN

         P7935X  FUEL A/B F&D VLV CLS              RR      RRR  R RRR     R RR
007-06   P7935X  FUEL A/B F&D VLV CLSD             11      111  1 111     1 11
011-01   P7935X  FUEL A/B F&D VLV CLSD
011-02   P7935X  FUEL A/B F&D VLV CLSD
011-04   P7935X  FUEL A/B F&D VLV CLSD
011-05   P7935X  FUEL A/B F&D VLV CLSD

         P7936X  FUEL LVL TK F11 PUMP OPEN
011-01   P7936X  FUEL LVL TK F11 PUMP OPEN

         P7937X  FUEL SENSOR LS-10
011-01   P7937X  FUEL SENSOR LS-10
011-05   P7937X  FUEL SENSOR LS-10

         P7938X  FUEL LVL TK FULL
011-01   P7938X  FUEL LVL TK FULL
011-02   P7938X  FUEL LVL TK FULL
011-05   P7938X  FUEL LVL TK FULL

         P7939X  FUEL LVL TK HALF FULL
011-01   P7939X  FUEL LVL TK HALF FULL
011-05   P7939X  FUEL LVL TK HALF FULL

         P7947X  LOX STORE TK FULL                 RRRRR  RRR  R RRR     R RR
010-03   P7947X  LOX STOR TK FULL                  11111  111  1 111     1 11

         P7957X  LOX VLV L7 OPEN                   RRRRR
010-02   P7957X  LOX VLV L7 OPEN                   11111

         P7958X  LOX VLV L7 CLOSED                 RRRRR
010-02   P7958X  LOX VLV L7 CLSD                   11111

         P7959X  LOX VLV L6 OPEN                   RRRRR
010-02   P7959X  LOX VLV L6 OPEN                   11111

         P7960X  LOX VLV L6 CLOSED                 RRRRR
```

```
OSTF 2 REC ASSIGNMNT 26 SEP 62    AE60-0653          123 123456 1234 123456 1 12345                036

     010-02   P7960X  LOX VLV L6 CLSD                  11111

              P7963X  LOX A/B F&D VLV OPEN             RRRRR  RRR  R RRR    R RR
     010-02   P7963X  LOX A/B F&D VLV OPEN             11111  111  1 111    1 11

              P7964X  LOX A/B F&D VLV CLSD             RRRRR  RRR  R RRR    R RR
     007-06   P7964X  LOX A/B F&D VLV CLSD             11     111  1 111    1 11
     010-02   P7964X  LOX A/B F&D VLV CLSD             11111  111  1 111    1 11

              P1051Y  ENG COMPT ACOUSTIC                       N      N
     034-00   P1051Y  ENG COMPT ACOUSTIC                       1      1
     037-01   P1051Y  ENG COMPT ACOUSTIC                       1      1

              U7019N  L/P LOX DISC CAMERA              LLLLL  LLL
     010-08   U7019N  L/P LOX DISCON CAMERA            11111  111

              U7020N  HOT-COLD DISC CAMERA             LLLLL
     010-08   U7020N  HOT-COLD DISCON CAMERA           11111

              U7080P  LOX TANK HEAD                    FFFFF                                        E
     010-03   U7080P  LOX TANK HEAD PRESS              11111
     010-04   U7080P  LOX TANK HEAD PRESS              11111
     010-06   U7080P  LOX TANK HEAD PRESS              11111

              U7081P  FUEL TANK HEAD PRESS                                                           E
     011-01   U7081P  FUEL TANK HEAD PRESS
     011-05   U7081P  FUEL TANK HEAD PRESS

              U7126V  AA COMP 28 VDC INPUT                                   F FF                    E
     007-08   U7126V  AA COMP 28 VDC INPUT                                   1 11
     024-     U7126V  AA COMP 28 VDC INPUT                                   1 1

              U7134V  AA TIME SHARED OSC OUTPUT                              F FF                    E
     007-08   U7134V  AA TIME SHARED OSC OUTPUT                              1 11
     024-     U7134V  AA TIME SHARED OSC OUTPUT                              1 1

              U7011X  RAPID FILL LOX CTL-1             RRRRR  RRR  R RRR    R RR
     007-05   U7011X  RAPID FILL LOX CTL-1             111    111  1 111    1 11
     010-02   U7011X  RAPID FILL LOX CTL-1             11111  111  1 111    1 11
     010-03   U7011X  RAPID FILL LOX CTL-1             11111  111  1 111    1 11
     010-04   U7011X  RAPID FILL LOX CTL-1             11111  111  1 111    1 11
     010-06   U7011X  RAPID FILL LOX CTL-1             11111  111  1 111    1 11
     010-07   U7011X  RAPID FILL LOX CTL-1             11111
     024-     U7011X  RAPID FILL LOX CTL-1                        1 1      1 1

              U7012X  TOPPING LOW CTL-1                RRRRR  RRR  R RRR    R RR
     007-05   U7012X  TOPPING LOW CTL-1                111    111  1 111    1 11
     010-02   U7012X  TOPPING LOW CTL-1                11111  111  1 111    1 11
     010-03   U7012X  TOPPING LOW CTL-1                11111  111  1 111    1 11
     010-04   U7012X  TOPPING LOW CTL-1                11111  111  1 111    1 11
     010-06   U7012X  TOPPING LOW CTL-1                11111  111  1 111    1 11
     010-07   U7012X  TOPPING LOW CTL-1                11111
     024-     U7012X  TOPPING LOW CTL-1                           1 1      1 1

              U7013X  TOPPING HIGH CTL-1               RRRRR  RRR  R RRR    R RR
     007-05   U7013X  TOPPING HIGH CTL-1               111    111  1 111    1 11
     010-02   U7013X  TOPPING HIGH CTL-1               11111  111  1 111    1 11
     010-03   U7013X  TOPPING HIGH CTL-1               11111  111  1 111    1 11
     010-04   U7013X  TOPPING HIGH CTL-1               11111  111  1 111    1 11
```

```
                                                                                                                                                                                                                                                                                                                                                                                                                                                                                                                                                                                                                                                                                                                                                                                                                                                                                                                                                                                                                                                                                                                                                                                                                                                                                                                                                                                                                                                                                                                                                                                                                                                                                                                                                                                                                                                                                                                                                                                                                                                                                                                                                                                                                                                                                                                                                                                                                                                                                                                                                                                                                                                                                                                                                                                                                                                                                                                                                                                                                                                                                                                                                                                                                                                                                                                                                                                                                                                                                                                                                                                                                                                                                                                                                                                                                                                                                                                                                                                                                                                                                                                                                                                                                                                                                                                                                                                                                                                                                                                                                                                                                                                                                                                                                                                                                                                                                                                                                                                                                                                                                                                                                                                                                                                                                                                                                                                                                                                                                                                                                                                                                                                                                                                                                                                                                                                                                                                                                                                                                                                                                                                                                                                                                                                                                                                                                                                                                                                                                                                                                                                                                                                                                                                                                                                                                                                                                                                                                                                                                                                                                                                                                                                                                                                                                                                                                                                                
OSTF 2 REC ASSIGNMNT 26 SEP 62     AE60-0653          123 123456 1234 123456 1 12345                                                                                                                                                                                                                                                                                                                                                                                                                                                                                                                                                                                                                                                                                                                                                                                                                                                                                                                                                                                                                                                                                                                                                                                                                                                                                                                                                                                                                                                                                                                                                                                                                                                                                                                                                                                                                                                                                                                                                                                                                                                                                                                                                                                                                                                                                                                                                                                                                                                                                                                                                                                                                                                                                                                                                                                                                                                                                                                                                                                                                                                                                                                                                                                                                                                                                                                                                                                                                                                                                                                                                                                                                                                                                                                                                                                                                                                                                                                                                                                                                                                                                                                                                                                                                                                                                                                                                                                                                                                                                                                                                                                                                                                                                                                                                                                                                                                                                                                                                                                                                                                                                                                                                                                                                                                                                                                                                                                                                                                                                                                                                                                                                                                                                                                                                                                                                                                                                                                                                                                                                                                                                                                                                                                                                                                                                                                                                                                                                                                                                                                                                                                                                                                                                                                                                                                                                                                                                                                                                                                                                                                                                                                                                                                                                                                                                                                                                                                                                                                                                                                                                                                                                                                                                                                                                                                                                                                                                                                                                                                                                                                                                                                                                                                                                                                                                                                                                                                                                                                                                                                                                                                                                                                                                                                                                                                                                                                                                                                                                                                                                                                                                                                                                                                                                                                                                                                                                                                                                                                                                                                                                                                                                                                                                                                                                                                                                                                
                                                                                                                                                                                                                                                                                                                                                                                                                                                                                                                                                                                                                                                                                                                                                                                                                                                                                                                                                                                                                                                                                                                                                                                                                                                                                                                                                                                                                                                                                                                                                                                                                                                                                                                                                                                                                                                                                                                                                                                                                                                                                                                                                                                                                                                                                                                                                                                                                                                                                                                                                                                                                                                                                                                                                                                                                                                                                                                                                                                                                                                                                                                                                                                                                                                                                                                                                                                                                                                                                                                                                                                                                                                                                                                                                                                                                                                                                                                                                                                                                                                                                                                                                                                                                                                                                                                                                                                                                                                                                                                                                                                                                                                                                                                                                                                                                                                                                                                                                                                                                                                                                                                                                                                                                                                                                                                                                                                                                                                                                                                                                                                                                                                                                                                                                                                                                                                                                                                                                                                                                                                                                                                                                                                                                                                                                                                                                                                                                                                                                                                                                                                                                                                                                                                                                                                                                                                                                                                                                                                                                                                                                                                                                                                                                                                                                                                                                                                                                                                                                
010-06   U7013X  TOPPING HIGH CTL-1                                                                                                                                                                                                                                                                                                                                                                                                                                                                                                                                                                                                                                                                                                                                                                                                                                                                                                                                                                                                                                                                                                                                                                                                                                                                                                                                                                                                                                                                                                                                                                                                                                                                                                                                                                                                                                                                                                                                                                                                                                                                                                                                                                                                                                                                                                                                                                                                                                                                                                                                                                                                                                                                                                                                                                                                                                                                                                                                                                                                                                                                                                                                                                                                                                                                                                                                                                                                                                                                                                                                                                                                                                                                                                                                                                                                                                                                                                                                                                                                                                                                                                                                                                                                                                                                                                                                                                                                                                                                                                                                                                                                                                                                                                                                                                                                                                                                                                                                                                                                                                                                                                                                                                                                                                                                                                                                                                                                                                                                                                                                                                                                                                                                                                                                                                                                                                                                                                                                                                                                                                                                                                                                                                                                                                                                                                                                                                                                                                                                                                                                                                                                                                                                                                                                                                                                                                                                                                                                                                                                                                                                                                                                                                                                                                                                                                                                                                                                                                                                                                                                                                                                                                                                                                                                                                                                
010-07   U7013X  TOPPING HIGH CTL-1                                                                                                                                                                                                                                                                                                                                                                                                                                                                                                                                                                                                                                                                                                                                                                                                                                                                                                                                                                                                                                                                                                                                                                                                                                                                                                                                                                                                                                                                                                                                                                                                                                                                                                                                                                                                                                                                                                                                                                                                                                                                                                                                                                                                                                                                                                                                                                                                                                                                                                                                                                                                                                                                                                                                                                                                                                                                                                                                                                                                                                                                                                                                                                                                                                                                                                                                                                                                                                                                                                                                                                                                                                                                                                                                                                                                                                                                                                                                                                                                                                                                                                                                                                                                                                                                                                                                                                                                                                                                                                                                                                                                                                                                                                                                                                                                                                                                                                                                                                                                                                                                                                                                                                                                                                                                                                                                                                                                                                                                                                                                                                                                                                                                                                                                                                                                                                                                                                                                                                                                                                                                                                                                                                                                                                                                                                                                                                                                                                                                                                                                                                                                                                                                                                                                                                                                                                                                                                                                                                                                                                                                                                                                                                                                                                                                                                                                                                                                                                                
024-     U7013X  TOPPING HIGH CTL-1                                                                                                                                                                                                                                                                                                                                                                                                                                                                                                                                                                                                                                                                                                                                                                                                                                                                                                                                                                                                                                                                                                                                                                                                                                                                                                                                                                                                                                                                                                                                                                                                                                                                                                                                                                                                                                                                                                                                                                                                                                                                                                                                                                                                                                                                                                                                                                                                                                                                                                                                                                                                                                                                                                                                                                                                                                                                                                                                                                                                                                                                                                                                                                                                                                                                                                                                                                                                                                                                                                                                                                                                                                                                                                                                                                                                                                                                                                                                                                                                                                                                                                                                                                                                                                                                                                                                                                                                                                                                                                                                                                                                                                                                                                                                                                                                                                                                                                                                                                                                                                                                                                                                                                                                                                                                                                                                                                                                                                                                                                                                                                                                                                                                                                                                                                                                                                                                                                                                                                                                                                                                                                                                                                                                                                                                                                                                                                                                                                                                                                                                                                                                                                                                                                                                                                                                                                                                                                                                                                                                                                                                                                                                                                                                                                                                                                                                                                                                                                                
                                                                                                                                                                                                                                                                                                                                                                                                                                                                                                                                                                                                                                                                                                                                                                                                                                                                                                                                                                                                                                                                                                                                                                                                                                                                                                                                                                                                                                                                                                                                                                                                                                                                                                                                                                                                                                                                                                                                                                                                                                                                                                                                                                                                                                                                                                                                                                                                                                                                                                                                                                                                                                                                                                                                                                                                                                                                                                                                                                                                                                                                                                                                                                                                                                                                                                                                                                                                                                                                                                                                                                                                                                                                                                                                                                                                                                                                                                                                                                                                                                                                                                                                                                                                                                                                                                                                                                                                                                                                                                                                                                                                                                                                                                                                                                                                                                                                                                                                                                                                                                                                                                                                                                                                                                                                                                                                                                                                                                                                                                                                                                                                                                                                                                                                                                                                                                                                                                                                                                                                                                                                                                                                                                                                                                                                                                                                                                                                                                                                                                                                                                                                                                                                                                                                                                                                                                                                
                 U7014X  100% LOX CONTROL-1                                                                                                                                                                                                                                                                                                                                                                                                                                                                                                                                                                                                                                                                                                                                                                                                                                                                                                                                                                                                                                                                                                                                                                                                                                                                                                                                                                                                                                                                                                                                                                                                                                                                                                                                                                                                                                                                                                                                                                                                                                                                                                                                                                                                                                                                                                                                                                                                                                                                                                                                                                                                                                                                                                                                                                                                                                                                                                                                                                                                                                                                                                                                                                                                                                                                                                                                                                                                                                                                                                                                                                                                                                                                                                                                                                                                                                                                                                                                                                                                                                                                                                                                                                                                                                                                                                                                                                                                                                                                                                                                                                                                                                                                                                                                                                                                                                                                                                                                                                                                                                                                                                                                                                                                                                                                                                                                                                                                                                                                                                                                                                                                                                                                                                                                                                                                                                                                                                                                                                                                                                                                                                                                                                                                                                                                                                                                                                                                                                                                                                                                                                                                                                                                                                                                                                                                                                                                                                                                                                                                                                                                                                                                                                                                                                                                                                                                                                                                                                
                                                                                                                                                                                                                                                                                                                                                                                                                                                                                                                                                                                                                                                                                                                                                                                                                                                                                                                                                                                                                                                                                                                                                                                                                                                                                                                                                                                                                                                                                                                                                                                                                                                                                                                                                                                                                                                                                                                                                                                                                                                                                                                                                                                                                                                                                                                                                                                                                                                                                                                                                                                                                                                                                                                                                                                                                                                                                                                                                                                                                                                                                                                                                                                                                                                                                                                                                                                                                                                                                                                                                                                                                                                                                                                                                                                                                                                                                                                                                                                                                                                                                                                                                                                                                                                                                                                                                                                                                                                                                                                                                                                                                                                                                                                                                                                                                                                                                                                                                                                                                                                                                                                                                                                                                                                                                                                                                                                                                                                                                                                                                                                                                                                                                                                                                                                                                                                                                                                                                                                                                                                                                                                                                                                                                                                                                                                                                                                                                                                                                                                                                                                                                                                                                                                                                                                                                                                
007-05   U7014X  100% LOX CTL-1                                                                                                                                                                                                                                                                                                                                                                                                                                                                                                                                                                                                                                                                                                                                                                                                                                                                                                                                                                                                                                                                                                                                                                                                                                                                                                                                                                                                                                                                                                                                                                                                                                                                                                                                                                                                                                                                                                                                                                                                                                                                                                                                                                                                                                                                                                                                                                                                                                                                                                                                                                                                                                                                                                                                                                                                                                                                                                                                                                                                                                                                                                                                                                                                                                                                                                                                                                                                                                                                                                                                                                                                                                                                                                                                                                                                                                                                                                                                                                                                                                                                                                                                                                                                                                                                                                                                                                                                                                                                                                                                                                                                                                                                                                                                                                                                                                                                                                                                                                                                                                                                                                                                                                                                                                                                                                                                                                                                                                                                                                                                                                                                                                                                                                                                                                                                                                                                                                                                                                                                                                                                                                                                                                                                                                                                                                                                                                                                                                                                                                                                                                                                                                                                                                                                                                                                                                                
010-02   U7014X  100% LOX CTL-1                                                                                                                                                                                                                                                                                                                                                                                                                                                                                                                                                                                                                                                                                                                                                                                                                                                                                                                                                                                                                                                                                                                                                                                                                                                                                                                                                                                                                                                                                                                                                                                                                                                                                                                                                                                                                                                                                                                                                                                                                                                                                                                                                                                                                                                                                                                                                                                                                                                                                                                                                                                                                                                                                                                                                                                                                                                                                                                                                                                                                                                                                                                                                                                                                                                                                                                                                                                                                                                                                                                                                                                                                                                                                                                                                                                                                                                                                                                                                                                                                                                                                                                                                                                                                                                                                                                                                                                                                                                                                                                                                                                                                                                                                                                                                                                                                                                                                                                                                                                                                                                                                                                                                                                                                                                                                                                                                                                                                                                                                                                                                                                                                                                                                                                                                                                                                                                                                                                                                                                                                                                                                                                                                                                                                                                                                                                                                                                                                                                                                                                                                                                                                                                                                                                                                                                                                                
010-03   U7014X  100% LOX CTL-1                                                                                                                                                                                                                                                                                                                                                                                                                                                                                                                                                                                                                                                                                                                                                                                                                                                                                                                                                                                                                                                                                                                                                                                                                                                                                                                                                                                                                                                                                                                                                                                                                                                                                                                                                                                                                                                                                                                                                                                                                                                                                                                                                                                                                                                                                                                                                                                                                                                                                                                                                                                                                                                                                                                                                                                                                                                                                                                                                                                                                                                                                                                                                                                                                                                                                                                                                                                                                                                                                                                                                                                                                                                                                                                                                                                                                                                                                                                                                                                                                                                                                                                                                                                                                                                                                                                                                                                                                                                                                                                                                                                                                                                                                                                                                                                                                                                                                                                                                                                                                                                                                                                                                                                                                                                                                                                                                                                
010-04   U7014X  100% LOX CTL-1                                                                                                                                                                                                                                                                                                                                                                                                                                                                                                                                                                                                                                                                                                                                                                                                                                                                                                                                                                                                                                                                                                                                                                                                                                                                                                                                                                                                                                                                                                                                                                                                                                                                                                                                                                                                                                                                                                                                                                                                                                                                                                                                                                                                                                                                                                                                                                                                                                                                                                                                                                                                                                                                                                                                                                                                                                                                                                                                                                                                                                                                                                                                                                                                                                                                                                                                                                                                                                                                                                                                                                                                                                                                                                                                                                                                                
010-06   U7014X  100% LOX CTL-1                                                                                                                                                                                                                                                                                                                                                                                                                                                                                                                                                                                                                                                                                                                                                                                                                                                                                                                                                                                                                                                                                                                                                                                                                                                                                                                                                                                                                                                                                                                                                                                                                                                                                                                                                                                                                                                                                                                                                                                                                                                                                                                                                                                                                                                                                                                                                                                                                                                                                                                                                                                                                                                                                                                                                                                                                                                
010-07   U7014X  100% LOX CTL-1                                                                                                                                                                                                                                                                                                                                                                                                                                                                                                                                                                                                                                                                                                                                                                                                                                                                                                                                                                                                                                                                                                                                                                                                                                                                                                                                                                                                                                                                                                                                                                                                                                                                                                                                                                                                                                                                                                                                                                                                                                                                                                                                                                                                                                                                                                                                                                                                                                                                                                                                                                                                                
024-     U7014X  100% LOX CTL-1                                                                                                                                                                                                                                                                                                                                                                                                                                                                                                                                                                                                                                                                                                                                                                                                                                                                                                                                                                                                                                                                                                                                                                                                                                                                                                                                                                                                                                                                                                                                                                                                                                                                                                                                                                                                                                                                                                                                                                                                                                                                                                                                                                                                                                                                                                                                                                
                                                                                                                                                                                                                                                                                                                                                                                                                                                                                                                                                                                                                                                                                                                                                                                                                                                                                                                
                 U7015X  RAPID FILL LOX CTL-2                                                                                                                                                                                                                                                                                                                                                                                                                                                                                                                                                                                                                                                
007-05   U7015X  RAPID FILL LOX CTL-2                                                                                                                                                                                                                                                                                                                                                                                                                                                                                                                                                                                                                                                
010-02   U7015X  RAPID FILL LOX CTL-2                                                                                                                                                                                                                                                                                                                                                                                                                                                                                                                                                                                                                                                
010-03   U7015X  RAPID FILL LOX CTL-2                                                                                                                                                                                                                                                                                                                                                                                                                                                                                                                                                                                                                                                
010-04   U7015X  RAPID FILL LOX CTL-2                                                                                                                                                                                                                                                                                                                                                                                                                                                                                                                                                                                                                                                
010-06   U7015X  RAPID FILL LOX CTL-2                                                                                                                                                                                                                                                                                                                                                                                                                                                                                                                                                                                                                                                
010-07   U7015X  RAPID FILL LOX CTL-2                                                                                                                                                                                                                                                                                                                                                                                                                                                                                                                                                                                                                                                
024-     U7015X  RAPID FILL LOX CTL-2                                                                                                                                                                                                                                                                                                                                                                                                                                                                                                                                                                                                                                                
                                                                                                                                                                                                                                                                                                                                                                                                                                                                                                                                                                                                
                 U7016X  TOPPING LOW CTL-2                                                                                                                                                                                                                                                                                                                                                                                                                                                                                                                                                
007-05   U7016X  TOPPING LOW CTL-2                                                                                                                                                                                                                                                                                                                                                                                                                                                                                                                                                
010-02   U7016X  TOPPING LOW CTL-2                                                                                                                                                                                                                                                                                                                                                                                                                                                                                                                                                
010-03   U7016X  TOPPING LOW CTL-2                                                                                                                                                                                                                                                                                                                                                                                                                                                                                                                                                
010-04   U7016X  TOPPING LOW CTL-2                                                                                                                                                                                                                                                                                                                                                                                                                                                                                                                                                
010-06   U7016X  TOPPING LOW CTL-2                                                                                                                                                                                                                                                                                                                                                                                                                                                                                                                                                
010-07   U7016X  TOPPING LOW CTL-2                                                                                                                                                                                                                                                                                                                                                                                                                                                                                                                                                
024-     U7016X  TOPPING LOW CTL-2                                                                                                                                                                                                                                                                                                                                                                                                                                                                                                                                                
                                                                                                                                                                                                                                                                                                                                                                                                                                                                                                                                                                                                
                 U7017X  TOPPING HIGH CTL-2                                                                                                                                                                                                                                                                                                                                                                                                                                                                                                                                                
007-05   U7017X  TOPPING HIGH CTL-2                                                                                                                                                                                                                                                                                                                                                                                                                                                                                                                                                
010-02   U7017X  TOPPING HIGH CTL-2                                                                                                                                                                                                                                                                                                                                                                                                                                                                                                                                                
010-03   U7017X  TOPPING HIGH CTL-2                                                                                                                                                                                                                                                                                                                                                                                                                                                                                                                                                
010-04   U7017X  TOPPING HIGH CTL-2                                                                                                                                                                                                                                                                                                                                                                                                                                                                                                                                                
010-06   U7017X  TOPPING HIGH CTL-2                                                                                                                                                                                                                                                                                                                                                                                                                                                                                                                                                
010-07   U7017X  TOPPING HIGH CTL-2                                                                                                                                                                                                                                                                                                                                                                                                                                                                                                                                                
024-     U7017X  TOPPING HIGH CTL-2                                                                                                                                                                                                                                                                                                                                                                                                                                                                                                                                                
                                                                                                                                                                                                                                                                                                                                                                                                                                                                                                                                                                                                
                 U7018X  100% LOX CONTROL-2                                                                                                                                                                                                                                                                                                                                                                                                                                                                                                                                                
007-05   U7018X  100% LOX CTL-2                                                                                                                                                                                                                                                                                                                                                                                                                                                                                                                                                
010-02   U7018X  100% LOX CTL-2                                                                                                                                                                                                                                                                                                                                                                                                                                                                                                                                                
010-03   U7018X  100% LOX CTL-2                                                                                                                                                                                                                                                                                                                                                                                                                                                                                                                                                
010-04   U7018X  100% LOX CTL-2                                                                                                                                                                                                                                                                                                                                                                                                                                                                                                                                                
010-06   U7018X  100% LOX CTL-2                                                                                                                                                                                                                                                                                                                                                                                                                                                                                                                                                
010-07   U7018X  100% LOX CTL-2                                                                                                                                                                                                                                                                                                                                                                                                                                                                                                                                                
024-     U7018X  100% LOX CTL-2                                                                                                                                                                                                                                                                                                                                                                                                                                                                                                                                                
                                                                                                                                                                                                                                                                                                                                                                                                                                                                                                                                                                                                
                 U7021X  FUEL LVL NOT LOW-1                                                                                                                                                                                                                                                                                                                                                                                                                                                                                                                                                
011-01   U7021X  FUEL LVL NOT LOW-1                                                                                                                                                                                                                                                                                                                                                                                                                                                                                                                                                
011-05   U7021X  FUEL LVL NOT LOW-1                                                                                                                                                                                                                                                                                                                                                                                                                                                                                                                                                
011-06   U7021X  FUEL LVL NOT LOW-1                                                                                                                                                                                                                                                                                                                                                                                                                                                                                                                                                
024-     U7021X  FUEL LVL NOT LOW-1                                                                                                                                                                                                                                                                                                                                                                                                                                                                                                                                                
                                                                                                                                                                                                                                                                                                                                                                                                                                                                                                                                                                                                
                 U7022X  FUEL LVL NOT LOW-2                                                                                                                                                                                                                                                                                                                                                                                                                                                                                                                                                
011-01   U7022X  FUEL LVL NOT LOW-2                                                                                                                                                                                                                                                                                                                                                                                                                                                                                                                                                
011-05   U7022X  FUEL LVL NOT LOW-2                                                                                                                                                                                                                                                                                                                                                                                                                                                                                                                                                
011-06   U7022X  FUEL LVL NOT LOW-2                                                                                                                                                                                                                                                                                                                                                                                                                                                                                                                                                
024-     U7022X  FUEL LVL NOT LOW-2                                                                                                                                                                                                                                                                                                                                                                                                                                                                                                                                                
                                                                                                                                                                                                                                                                                                                                                                                                                                                                                                                                                                                                
                 U7023X  FUEL LVL TOO HIGH-1                                                                                                                                                                                                                                                                                                                                                                                                                                                                                                                                                
011-01   U7023X  FUEL LVL TOO HIGH-1                                                                                                                                                                                                                                                                                                                                                                                                                                                                                                                                                
```

```
OSTF 2 REC ASSIGNMNT 26 SEP 62     AE60-0653        123 123456 1234 123456 1 12345                038

     011-05   U7023X  FUEL LVL TOO HIGH-1
     011-06   U7023X  FUEL LVL TOO HIGH-1
     024-     U7023X  FUEL LVL TOO HIGH-1                          1 1       1 1

              U7024X  FUEL LVL TOO HIGH-2                          R R       R R
     011-01   U7024X  FUEL LVL TOO HIGH-2
     011-05   U7024X  FUEL LVL TOO HIGH-2
     011-06   U7024X  FUEL LVL TOO HIGH-2
     024-     U7024X  FUEL LVL TOO HIGH-2                          1 1       1 1

              U7125X  AA COMPUTER RESET                F FFF    FFF  F FFF     F F                  E
     007-08   U7125X  AA COMPUTER RESET                1 111    111  1 111
     024-     U7125X  AA COMPUTER RESET                            1 1       1 1

              U7132X  AA STA COUNTER OTP               F FFF    FFF  F FFF     F F                  E
     007-08   U7132X  AA STA COUNTER OUTPUT            1 111    111  1 111
     024-     U7132X  AA STA COUNTER OUTPUT                        1 1       1 1

              Y7052X  R/V BATT HTR THERMOS             RRRR    RRRR RR RRR     R RR
     003-15   Y7052X  R/V BAT HTR THERMOSTAT           1       1    1
     006-05   Y7052X  R/V BAT HTR THERMOSTAT            111     111  1 111     1 11

              Y7054X  LAUNCH CONTROL POWER              RRR     RRR  R RRR     R RR
     003-14   Y7054X  LAUNCH CONTROL POWER              111     111  1 111     1 11
     006-05   Y7054X  LAUNCH CONTROL POWER              111     111  1 111     1 11

              Y7055X  START COUNTDOWN PWR               RRR     RRR  R RRR     R RR
     003-14   Y7055X  START COUNTDOWN POWER             111     111  1 111     1 11
     006-05   Y7055X  START COUNTDOWN POWER             111     111  1 111     1 11

              Y7056X  28 VDC VERIFICATION               RRR     RRR  R RRR     R RR
     003-14   Y7056X  28 VDC VERIFICATION               111     111  1 111     1 11
     006-05   Y7056X  28 VDC VERIFICATION               111     111  1 111     1 11
     009-04   Y7056X  28 VDC VERIFICATION               11111   111  1 111     1 11

              Y7059X  R/V CONTINUITY                    RRRRRR  RRRR RR RRR     R RR
     003-15   Y7059X  R/V CONTINUITY                    1       1    1
     003-16   Y7059X  R/V COUNTINUITY                   1       1    1
     006-05   Y7059X  R/V CONTINUITY                     111     111  1 111     1 11
     009-04   Y7059X  R/V CONTINUITY                     11111   111  1 111     1 11

              Y7061X  MARK 4 R/V                        RRRRR   RRR  R RRR     R RR
     003-14   Y7061X  MARK 4 R/V                        111     111  1 111     1 11
     006-05   Y7061X  MARK 4 R/V                        111     111  1 111     1 11
     009-04   Y7061X  MARK 4 R/V                        11111   111  1 111     1 11

              Y7062X  R/V TACTICAL                      RRRRRR  RR R RR RRR     R RR
     003-15   Y7062X  R/V TACTICAL                      1       1    1
     003-16   Y7062X  R/V TACTICAL                      1       1    1
     006-05   Y7062X  R/V TACTICAL                       111     111  1 111     1 11
     009-04   Y7062X  R/V TACTICAL                       11111   111  1 111     1 11

              Y7064X  115 VAC VERIFICATION              RRR     RRR  R RRR     R RR
     003-14   Y7064X  115 VAC VERIFICATION              111     111  1 111     1 11
     006-05   Y7064X  115 VAC VERIFICATION              111     111  1 111     1 11

              Y7065X  START COUNTDOWN VFY               RRR     RRR  R RRR     R RR
     003-14   Y7065X  START COUNTDOWN VERIFY            111     111  1 111     1 11
     006-05   Y7065X  START COUNTDOWN VERIFY            111     111  1 111     1 11
```

```
OSTF 2 REC ASSIGNMNT 26 SEP 62    AE60-0653          123 123456 1234 123456 1 12345                039

          Y7066X  TARGET A SET                        RRR    RRR  R RRR    R RR
003-14    Y7066X  TARGET A SET                        111    111  1 111    1 11
006-05    Y7066X  TARGET A SET                        111    111  1 111    1 11

          Y7067X  TARGET B SET                        RRR    RRR  R RRR    R RR
003-14    Y7067X  TARGET B SET                        111    111  1 111    1 11
006-05    Y7067X  TARGET B SET                        111    111  1 111    1 11

          Y7068X  MARK 3 R/V                          RRRRR  RRR  R RRR    R RR
006-05    Y7068X  MARK 3 R/V                          111    111  1 111    1 11
009-04    Y7068X  MARK 3 R/V                          11111  111  1 111    1 11

          Y7069X  TARGET A SELECT                     RRRRRR RRRR R RRRR   R RR
003-15    Y7069X  TARGET A SELECT                     1      1    1
003-16    Y7069X  TARGET A SELECT                     1      1    1
006-05    Y7069X  TARGET A SELECT                      111    111  1 111    1 11
009-04    Y7069X  TARGET A SELECT                      11111  111  1 111    1 11

          Y7070X  TARGET B SELECT                     RRRRRR RRRR R RRRR   R RR
003-15    Y7070X  TARGET B SELECT                     1      1    1
003-16    Y7070X  TARGET B SELECT                     1      1    1
006-05    Y7070X  TARGET B SELECT                      111    111  1 111    1 11
009-04    Y7070X  TARGET B SELECT                      11111  111  1 111    1 11

          Y7071X  START COUNTDOWN SIG                 RRRRR  RRR  R RRR    R RR
003-14    Y7071X  START COUNTDOWN SIGNAL              111    111  1 111    1 11
006-05    Y7071X  START COUNTDOWN SIGNAL              111    111  1 111    1 11
009-04    Y7071X  START COUNTDOWN SIG                 11111  111  1 111    1 11

          Y7072X  28 VDC RECEIVER                     RRRRR  RRR  R RRR    R RR
003-14    Y7072X  28 VDC RECEIVER                     111    111  1 111    1 11
006-05    Y7072X  28 VDC RECEIVER                     111    111  1 111    1 11
```

This page intentionally left blank.

THIS MATERIAL CONTAINS INFORMATION AFFECTING THE NATIONAL DEFENSE OF THE UNITED STATES WITHIN THE MEANING OF THE ESPIONAGE LAWS, TITLE 18, U.S.C., SECTIONS 793 AND 794, THE TRANSMISSION OR REVELATION OF WHICH IN ANY MANNER TO AN UNAUTHORIZED PERSON IS PROHIBITED BY LAW.

~~CONFIDENTIAL~~

SECTION 10
TEST PLAN AND RECORDER ASSIGNMENTS

This section indicates the recorder assignment of each measurement for each block in which the measurement is required. In addition the code of the test objectives supported by each measurement and the measurement priority in regard to each of those objectives are listed after each measurement.

OBJECTIVE CODE

Test objectives supported by a measurement are indicated by listing the code of those objectives beneath the measurement.

RECORDER ASSIGNMENTS

			BLOCK I	BLOCK II	BLOCK III	BLOCK IV
030	N7051X N7051X	COM. STA. 1 ON-OFF	R 1	R 1	R 1	R 1
030	N7052X N7052X	COM. STA. 2 ON-OFF	R 1	R 1	R 1	R 1
			BLOCK I PRIORITY	BLOCK II PRIORITY	BLOCK III PRIORITY	BLOCK IV PRIORITY

MEASUREMENT NUMBER

MEASUREMENT DESCRIPTION

BLANK PAGE

GENERAL DYNAMICS | ASTRONAUTICS

REPORT NO. OSTF-2 L/L COMP

DATE 26 SEP 62

PAGE 1

VEHICLE	SYSTEM	MEASUREMENT NUMBER	TYPE MEASUREMENT	DESCRIPTION	TLM / REC	SUBCARRIER / TRACE	COMM PIN / CHANNEL	MEASUREMENT RANGE LOW	MEASUREMENT RANGE HIGH	UNITS OF FUNCTION	ACCURACY	RATE OF CHANGE OR FREQUENCY OF FUNCTION	5 7 1 3 8 3
	A	7541	A	ACCEL MSL X AXIS		F		M.5	.5	G	5%	30	
	A	7542	A	ACCEL MSL Y AXIS		F		M.5	.5	G	5%	30	
	A	7828	D	MISSILE NOSE X AXIS		F		M1.5	1.5	DEG	5%	5	
	A	7829	D	MISSILE NOSE Y AXIS		F		M1.5	1.5	DEG	5%	5	
	A	1217	P	HEAT SHIELD DP Q2		F		M1	1	PID	.05	30	X
	A	1218	P	HT SHLD DP Y-Y AXIS		F		M1	1	PID	.05	30	X
	A	1219	P	HEAT SHIELD DP Q1		BF		M1	1	PID	.05	30	X X
	A	1220	P	HEAT SHIELD DP Q3		BF		M1	1	PID	.05	30	X X
	A	1585	P	HT SHIELD INSIDE 1		F		0	25	PIA	1	500	X X
	A	1586	P	HT SHIELD INSIDE 2		F		0	25	PIA	1	500	X X
	A	7533	S	BEND AT STA 900 #1		F		0	5K	PIA	250		
	A	7534	S	BEND AT STA 900 #2		F		0	5K	PIA	250		
	A	7535	S	BEND AT STA 900 #3		F		0	5K	PIA	250		
	A	7536	S	BEND AT STA 900 #4		F		0	5K	PIA	250		
	A	7537	S	BEND AT STA 1100 #1		F		0	10K	PIA	500		
	A	7538	S	BEND AT STA 1100 #2		F		0	10K	PIA	500		
	A	7539	S	BEND AT STA 1100 #3		F		0	10K	PIA	500		
	A	7540	S	BEND AT STA 1100 #4		F		0	10K	PIA	500		
	A	7820	S	BEND AT STA 900 #5		F		0	5K	PIA	250		
	A	7821	S	BEND AT STA 900 #6		F		0	5K	PIA	250		
	A	7822	S	BEND AT STA 900 #7		F		0	5K	PIA	250		
	A	7823	S	BEND AT STA 900 #8		F		0	5K	PIA	250		
	A	7824	S	BEND AT STA 1100 #5		F		0	10K	PIA	500		
	A	7825	S	BEND AT STA 1100 #6		F		0	10K	PIA	500		
	A	7826	S	BEND AT STA 1100 #7		F		0	10K	PIA	500		
	A	7827	S	BEND AT STA 1100 #8		F		0	10K	PIA	500		
	A	1194	T	HT SHLD FWD Q IV		BF		0	1000	DGF	5	SLO	X X X

REPORT NO. OSTF-2 L/L COMP DATE 26 SEP 62 PAGE 2

VEHICLE	SYSTEM	MEASUREMENT NUMBER	TYPE MEASUREMENT	DESCRIPTION	SAMPLE RATE / BIC	SUBCARRIER / TRACK	COMM PAR / CHANNEL	MEASUREMENT RANGE LOW	MEASUREMENT RANGE HIGH	UNITS OF FUNCTION	ACCURACY	RATE OF CHANGE OR FREQUENCY OF FUNCTION	571333		
A	1199	T	HT SHLD FWD Q II		BF		0	1000	DGF	5	SLO	X	X	X
A	7901	T	ROTARY INV SKIN		S		30	120	DGF		SLO			
A	7902	T	ARMA PLAT SKIN FWD		S		30	120	DGF		SLO			
A	7903	T	ARMA PLAT SKIN AFT		S		30	120	DGF		SLO			
A	7904	T	ARMA CONTROL SKIN		S		30	120	DGF		SLO			
A	7905	T	TLM XMTR SKIN		S		30	120	DGF		SLO			
A	7906	T	ROTARY INV AMB AIR		S		30	120	DGF		SLO			
A	7907	T	ARMA PLAT AMB AIR		S		40	75	DGF	.5	SLO			
A	7908	T	ARMA CONT AMB AIR		S		30	120	DGF		SLO			
A	7909	T	TLM XMTR AMB AIR		S		30	120	DGF		SLO			
A	7911	T	B2 POD INLET AIR		S		30	120	DGF		SLO			
A	7912	T	AIG POD INNER SKIN		S		30	120	DGF		SLO			
A	1780	Y	ARMA POD ACOUST		N		115	155	DB	5%	20K	X	X	X
E	7003	V	28 VDC GND VOLTAGE		F		0	35	VDC	5%	25			X
E	7004	V	400 CPS GND VOLTAGE		F		0	130	VAC	5%	25			
E	7005	V	28 VDC A/B VOLTAGE		S		0	35	VDC	5%	100			X
E	7006	V	400 CPS INVERTER OUT		F		0	130	VAC	5%	25			X
E	7007	V	440 V IN TO DC SUP				0	500	VAC	5%	25			
E	7010	V	115V 60 CPS GND VOLT		O		100	120	VAC	5%	25			X
F	7001	P	LOX TANK PRESSURE		BS		0	35	PIG	.5	20	X	X	X
F	7003	P	FUEL TANK PRESSURE		BS		0	75	PIG	1	20	X	X	X
F	7005	P	FUL TK PRES DUCT PCU		BS		0	75	PIG	2	20	X	X	X
F	7006	P	FUL TK PRES DUCT ROD		F		0	75	PIG	1.5	20			
F	7012	P	LOX TK PRES DUCT PCU		BS		0	35	PIG	.5	20	X	X	X
F	7013	P	LOX TK PRES DUCT ROD		F		0	35	PIG	.5	20			
F	7020	P	LN2 P @ ROD		F		0	100	PIG	2				
F	7056	P	GN2 H PRESS MANIFOLD		F		0	5000	PIG	100	750			
F	7057	P	GN2 PRES VLV N-2 INL		F		0	5000	PIG	100	750			
F	7058	P	GN2 PRES VLV N-2 OUT		F		0	200	PIA	4	750			

GENERAL DYNAMICS | ASTRONAUTICS

REPORT NO. OSTF-2 L/L COMP DATE 26 SEP 62 PAGE 3

VEHICLE	SYSTEM	MEASUREMENT NUMBER	TYPE MEASUREMENT	DESCRIPTION	TLM / SEC	SUBCARRIER / TRACK	COMM PIN / CHANNEL	MEASUREMENT RANGE LOW	MEASUREMENT RANGE HIGH	UNITS OF FUNCTION	ACCURACY	RATE OF CHANGE OR FREQUENCY OF FUNCTION	5	11	18	3
	F	7059	P	LOX STOR TK ULLAGE		F		0	200	PIA	4	750				
	F	1145	P	S CTL HE BOTTLE DISC		FS		0	3250	PIA	65	10	X	X	X	
	F	7145	P	S CTL HE BTL DISCH		S		0	3500	PIG	70	SLO				
	F	7246	P	B TANK HE BOTTLES HI		S		0	3500	PIG	70	SLO				
	F	7713	P	A/B LN2 SHROUD		F		0	20	PIG	.5					
	F	7716	P	GND HEAT XGR HE IN				0	4000	PIG	80	SLO				
	F	7717	P	GND HEAT XGR HE OUT				0	4000	PIG	80	SLO				
	F	7720	P	LN2 STORE XFER P				0	150	PIG	3	SLO				
	F	7723	P	HE SUPPLY #1 @ PDU		F		0	8000	PIG	160					
	F	7725	P	GN2 SUPPLY @ PDU		F		0	4000	PIG	80					
	F	7727	P	REGULATED INST AIR		F		0	350	PIG	7					
	F	7731	P	HE SUP #2 @ TP E		D		0	8000	PIG	160	10				
	F	7735	P	HE SUP TO MSL @ HCU		F		0	5000	PIG	100					
	F	7737	F	FUL TK HE SENS HCU				0	70	PIG	1.5					
	F	7719	R	STORAGE TANK LN2 OUT		F		0	120	GPM	3					
	F	7017	T	FUEL TK PRESS DUCT				0	150	DGF	3	SLO				
	F	7018	T	LOX TK PRESS DUCT				0	150	DGF	3	SLO				
	F	1247	T	B TANK HE BOTTLE		S		M400	M250	DGF	10	SLO	X			
	F	7248	T	HE TEMP HI 4 BTL		F		M330	100	DGF	2%	SLO				
	F	7249	T	HE TEMP LO 4 BTL		F		M330	M200	DGF	2%	SLO				
	F	7250	T	HE TEMP LO 2 BTL		F		M330	M200	DGF	2%	SLO				
	F	1290	T	S CTL HE BOTTLE		BF		M100	300	DGF	4	SLO	X	X	X	
	F	7290	T	S CTL HE BOTTLE		S		M100	300	DGF	4	SLO				
	F	7714	T	GND HEAT XGR HE IN				0	100	DGF	2	SLO				
	F	7715	T	GND HEAT XGR HE OUT				M350	M200	DGF	2	SLO				
	F	7736	T	HE SUP TO MSL @ HCU		F		M250	160	DGF	9					
	F	7738	T	FUL TK HE SENS @ HCU		F		M280	160	DGF	9					
	F	7745	T	HE SUP TO MSL @ ROD				M350	M300	DGF	1					
	H	7987	D	HI DOOR POSITION		D		0	100	DEG	2	SLO		X		

GENERAL DYNAMICS | ASTRONAUTICS

REPORT NO. OSTF-2 L/L COMP DATE 26 SEP 62 PAGE 4

VEHICLE	SYSTEM	MEASUREMENT NUMBER	TYPE MEASUREMENT	DESCRIPTION	TLM / REC	SUBCARRIER / TRACE	COMM PIN / CHANNEL	MEASUREMENT RANGE LOW	MEASUREMENT RANGE HIGH	UNITS OF FUNCTION	ACCURACY	RATE OF CHANGE OR FREQUENCY OF FUNCTION	571383		
	H	7988	D	LO DOOR POSITION		D		0	100	DEG	2	SLO		X	
	H	7501	P	HPU B FILL LINE P		F		0	5000	PIG	50	5			
	H	7502	P	HPU B RETURN LINE P		F		0	500	PIG	5	5			
	H	7503	P	HPU SUS FILL LINE P		F		0	5000	PIG	50	5			
	H	7504	P	HPU SUS RET LINE P		F		0	500	PIG	5	5			
	H	7507	P	SYSTEMS HYD ACUM		F		0	5000	PIG	100	200		X	
	H	7508	P	UPPER DOOR HYD ACUM		F		0	5000	PIG	100	200		X	
	H	7509	P	LOWER DOOR HYD ACUM		F		0	5000	PIG	100	200		X	
	H	7515	P	HOR CRIB LK CYL HD		F		0	5000	PIG	100	40		X	
	H	7516	P	L/P LOCK-LOCKING		F		0	5000	PIG	100	200		X	
	H	7527	P	WGE LKS LOCK ROD END		F		0	5000	PIG	100	200		X	
	H	7528	P	WEDGE LK LKN CYL END		F		0	5000	PIG	100	200		X	
	H	7529	P	L/P BRAKE		S		0	5000	PIG	100	40		X	
	H	7969	P	CRIB LOCKS VERT		F		0	5000	PIG	100	40		X	
	H	7975	P	LWR DOOR CYL ROD END		F		0	5000	PIG	100	40		X	
	H	7976	P	L/P LOCK-UNLOCKING		F		0	5000	PIG	100	200		X	
	H	7981	P	UPR DOOR CYL HD END		F		0	5000	PIG	100	40		X	
	H	7982	P	LWR DOOR CYL HD END		F		0	5000	PIG	100	40		X	
	H	7986	P	UPR DOOR CYL ROD END		F		0	5000	PIG	100	40		X	
	H	7181	T	HYD FLUID S PCH ACTR		F		M200	200	DGF	8	SLO			
	H	7182	T	HYD FLUID S YAW ACTR		F		M200	200	DGF	8	SLO			
	H	7531	T	BOOSTER SYSTEM OIL		F		M50	150	DGF	3	SLO			
	H	7532	T	SUST SYSTEM OIL		F		M50	150	DGF	3	SLO			
	H	7190	X	H CRIB LK 2 NOT EXT		R		OFF	ON	VDC		STP	X	X	X
	H	7191	X	HOR CRIB LK #2 RET		R		OFF	ON	VDC		STP	X	X	X
	H	7192	X	VERT CRIB LK #2 RET		R		OFF	ON	VDC		STP	X	X	X
	H	7193	X	VERT CRIB LK #2 EXT		R		OFF	ON	VDC		STP	X	X	X
	H	7194	X	L/P WEDGE LK 3 EXT		R		OFF	ON	VDC		STP	X	X	X
	H	7195	X	L/P WDG LK 3 NOT RET		R		OFF	ON	VDC		STP	X	X	X

GENERAL DYNAMICS | ASTRONAUTICS

REPORT NO OSTF-2 L/L COMP DATE 26 SEP 62 PAGE 5

VEHICLE	SYSTEM	MEASUREMENT NUMBER	TYPE MEASUREMENT	DESCRIPTION	TLM / REC	SUBCARRIER / TRACK	COMM PIN / CHANNEL	MEASUREMENT RANGE LOW	MEASUREMENT RANGE HIGH	UNITS OF FUNCTION	ACCURACY	RATE OF CHANGE OR FREQUENCY OF FUNCTION	5	7	13	33
	H	7196	X	L/P MIN LK 3 NOT EXT		R		OFF	ON	VDC		STP	X	X	X	
	H	7197	X	L/P MAIN LK #3 RET		R		OFF	ON	VDC		STP	X	X	X	
	H	7198	X	EXTEND WDG LKS SIG		R		OFF	ON	VDC		STP	X	X	X	
	H	7199	X	RETRACT WDG LKS SIG		R		OFF	ON	VDC		STP	X	X	X	
	H	7200	X	EXTEND MIN LKS SIG		R		OFF	ON	VDC		STP	X	X	X	
	H	7201	X	RETRACT MIN LKS SIG		R		OFF	ON	VDC		STP	X	X	X	
	H	7202	X	EXTEND HOR LKS SIG		R		OFF	ON	VDC		STP	X	X	X	
	H	7203	X	RETRACT HOR LKS SIG		R		OFF	ON	VDC		STP	X	X	X	
	H	7805	X	OPEN UPR DOOR SIG		R		OFF	ON	VDC		STP	X	X	X	
	H	7806	X	OPEN LWR DOOR SIG		R		OFF	ON	VDC		STP	X	X	X	
	H	7807	X	L/P LOCK ASSY OPEN		R		OFF	ON	VDC		STP	X	X	X	
	H	7809	X	RETRACT VER LKS SIG		R		ON	OFF	VDC	C	STP	X	X	X	
	H	7810	X	CLOSE UPR DR SIG		R		ON	OFF	VDC		STP	X	X	X	
	H	7811	X	CLOSE LWR DR SIG		R		ON	OFF	VDC		STP	X	X	X	
	H	7812	X	L/P LOCK ASSY CLOSE		R		ON	OFF	VDC		STP	X	X	X	
	H	7816	X	EXTEND VER LKS SIG		R		ON	OFF	VDC		STP	X	X	X	
	H	7820	X	HPU START		R		OFF	ON	VDC		STP		X	X	
	H	7972	X	PRESS SW RETURN		R		ON	OFF	VDC			X			
	I	7515	A	ACCELEROMETER XF1		F			.180	VAC		5K	X	X	X	
	I	7516	A	ACCELEROMETER YF1		F			.180	VAC		5K	X	X	X	
	I	7517	A	ACCELEROMETER ZF1		F			.180	VAC		5K	X	X	X	
	I	7518	A	ACCELEROMETER XF2		F			.180	VAC		5K	X	X	X	
	I	7519	A	ACCELEROMETER YF2		F			.180	VAC		5K	X	X	X	
	I	7520	A	ACCELEROMETER ZF2		F			.180	VAC		5K	X	X	X	
	I	7591	C	PITCH GYRO TORQUE		D		M.5	.5	VDC		10			X	
	I	7592	C	ROLL GYRO TORQUE		D		M.5	.5	VDC		10	X	X	X	
	I	7593	C	YAW GYRO TORQUE		D		M.45	.45	VDC		10	X	X	X	
	I	7501	D	OPTICAL AZM SIGNAL		D		M.05	.05	VAC		20	X	X	X	
	I	7511	D	ROLL PENDULUM		D		M.02	.02	VAC		10	X	X	X	

REPORT NO. OSTF-2 L/L COMP DATE 26 SEP 62 PAGE 6

VEHICLE	SYSTEM	MEASUREMENT NUMBER	TYPE MEASUREMENT	DESCRIPTION	TLM / SEC	SUBCARRIER / TRACE	COMM PAN / CHANNEL	MEASUREMENT RANGE LOW	MEASUREMENT RANGE HIGH	UNITS CV FUNCTION	ACCURACY	RATE OF CHANGE OR FREQUENCY OF FUNCTION	5/1383		
I		7512	D	PITCH PENDULUM		D		M.02	.02	VAC		10	X	X	X
I		7549	D	PITCH SERVO ERROR		D			20	VAC		10	X	X	X
I		7550	D	ROLL SERVO ERROR		D			20	VAC		10	X	X	X
I		7551	D	AZIMUTH SERVO ERROR		D			20	VAC		10	X	X	X
I		7552	D	REDNOT GYRO PICK-OFF		DF			5	VDC		20	X	X	X
I		7572	D	ROLL MEMORY		D		D	.010	VAC		10	X	X	X
I		7573	D	PITCH MEMORY		D			.010	VAC		10	X	X	X
I		7574	D	AZIMUTH MEMORY		D			.030	VAC		10	X	X	X
I		7576	D	ZERO LAG OUTPUT I		D			.030	VAC		20	X	X	X
I		7505	H	COMPUTER POSITION X		F		0	5	VDC		10K	X	X	X
I		7506	H	COMPUTER POSITION Y		F		0	5	VDC		10K	X	X	X
I		7507	H	COMPUTER POSITION Z		F		0	5	VDC		10K	X	X	X
I		7508	H	RANGE ERROR FUNCTION		F		0	5	VDC		10K	X	X	X
I		7509	H	AZM ERROR FUNCTION		F		0	5	VDC		10K	X	X	X
I		7502	L	COMPUTER VELOCITY X		F		0	5	VDC		10K	X	X	X
I		7503	L	COMPUTER VELOCITY Y		F		0	5	VDC		10K	X	X	X
I		7504	L	COMPUTER VELOCITY Z		F		0	5	VDC		10K	X	X	X
I		7538	O	ALIGN GROUP RADIAL		F		M5	5	G		30			X
I		7539	O	ALIGN GROUP TANG		F		M5	5	G		30			X
I		7542	O	ALIGN GROUP AXIAL		F		M5	5	G		30			X
I		7015	T	COMPUTER EXHAUST		S		40	75	DGF	.5	SLO			
I		7528	V	YAW STEERING SIG		F			5	VDC		20	X	X	X
I		7529	V	ROLL RESOLVER SIG		F			5	VDC		20	X	X	X
I		7530	V	PITCH RESOLVER SIG		F			5	VDC		20	X	X	X
I		7540	V	TEMP CONTROL AMP OUT		F			110	VDC		1			
I		7580	V	AZM RESOLVER SIG		F			5	VDC		20	X	X	X
I		7510	W	ELAPSED TIME		F		0	450	SEC			X	X	X

REPORT NO. OSTF-2 L/L COMP DATE 26 SEP 62 PAGE 7

VEHICLE	SYSTEM	MEASUREMENT NUMBER	TYPE MEASUREMENT	DESCRIPTION	TLM / REC	SHEARER / TRACK	COMM PIN / CHANNEL	MEASUREMENT RANGE LOW	MEASUREMENT RANGE HIGH	UNITS OF FUNCTION	ACCURACY	RATE OF CHANGE OR FREQUENCY OF FUNCTION	57	13	83
	I	7521	X	VERN ENGINE COF SIG		F		0	5	VDC			X	X	X
	I	7522	X	S ENGINE COF SIG		F		0	5	VDC			X	X	X
	I	7527	X	PRE-ARM RELAY CLOS		F		0	5	VDC			X	X	X
	I	7537	X	ELEVATION WARNING		R		OFF	ON	VDC		STP	X	X	X
	I	7570	X	STAGING SIGNAL		F		0	5	VDC			X	X	X
	I	7611	X	START COUNTDOWN		R		OFF	ON	VDC		STP	X	X	X
	I	7612	X	ST FINE ALN-TRG MODE		R		OFF	ON	VDC		STP	X	X	X
	I	7613	X	Z AXIS VERT-FINE ALN		R		OFF	ON	VDC		STP	X	X	X
	I	7614	X	FINE ALMNT COMPLETE		R		OFF	ON	VDC		STP	X	X	X
	I	7615	X	COMPUTER TEST COMP		R		OFF	ON	VDC		STP	X	X	X
	I	7616	X	START X ACCEL OFFSET		R		OFF	ON	VDC		STP	X	X	X
	I	7617	X	ACCEL TEST COMPLETE		R		OFF	ON	VDC		STP	X	X	X
	I	7618	X	IGS READY		R		OFF	ON	VDC		STP	X	X	X
	I	7619	X	GO INERTIAL COMMAND		R		OFF	ON	VDC		STP	X	X	X
	I	7620	X	MGS INERTIAL		R		OFF	ON	VDC		STP	X	X	X
	I	7621	X	ZERO Z ACC COMPLETE		R		OFF	ON	VDC		STP	X	X	X
	I	7622	X	SCALE X PLUS 1G		R		OFF	ON	VDC		STP	X	X	X
	I	7623	X	SCALE X MINUS 1G		R		OFF	ON	VDC		STP	X	X	X
	I	7624	X	HOLD COUNTDOWN		R		OFF	ON	VDC		STP	X	X	X
	I	7625	X	RETURN TO READY REG		R		OFF	ON	VDC		STP	X	X	X
	I	7626	X	RETURN TO READY COMP		R		OFF	ON	VDC		STP	X	X	X
	I	7627	X	GO ON VERT MEMORY		R		OFF	ON	VDC		STP	X	X	X
	I	7628	X	GO ON AZIMUTH MEMORY		R		OFF	ON	VDC		STP	X	X	X
	I	7630	X	GYRO A IN BAND		R		OFF	ON	VDC		STP	X	X	X
	I	7631	X	GYRO B IN BAND		R		OFF	ON	VDC		STP	X	X	X
	L	7009	N	LAUNCHER CAM X AXIS											
	L	7010	N	LAUNCHER CAM B2 SIDE											
	L	7011	N	RISE OFF DISC CAMERA											
	L	7012	N	UMBILICAL CAMERA											
	L	7013	P	FLAME DEFLECT AMB 1		F		0	25	PIA	1	100		X	X

REPORT NO. OSTF-2 L/L COMP DATE 26 SEP 62 PAGE 8

VEHICLE	SYSTEM	MEASUREMENT NUMBER	TYPE MEASUREMENT	DESCRIPTION	SAMPLE RATE / SEC	SAMPLE RATE / BLOCK	CONDITIONING / CHANNEL	MEASUREMENT RANGE LOW	MEASUREMENT RANGE HIGH	UNITS OF FUNCTION	ACCURACY	% OF CHANGE OF FREQUENCY OF FUNCTION	511363
	L	7014	P	FLAME DEFLECT AMB 2		F		0	25	PIA	1	100	X X
	L	7015	P	FLAME DEFLECT AMB 3		F		0	25	PIA	1	100	X X
	L	7016	P	FLAME DEFLECT AMB 4		F		0	25	PIA	1	100	X X
	L	7601	P	HT SHIELD OUTSIDE 1		F		0	25	PIA	1	500	X X
	L	7602	P	HT SHIELD OUTSIDE 2		F		0	25	PIA	1	500	X X
	L	7005	T	LAUNCHER FRAME		S		0	1200	DGF	36	SLO	
	L	7006	T	LAUNCHER FRAME		S		0	1200	DGF	36	SLO	
	M	7604	N	FOR LIFT OFF CAM									X X
	M	7605	N	AFT LIFT OFF CAM									X
	N	7542	A	CRIB ACCELERATION 1		F		M4	4	G	.2	100	
	N	7543	A	CRIB ACCELERATION 2		F		M4	4	G	.2	100	
	N	7741	A	CRIB ACCELERATION 3		F		M4	4	G	.2	100	
	N	7742	A	CRIB ACCELERATION 4		F		M4	4	G	.2	100	
	N	7743	A	CRIB ACCELERATION 5		F		M4	4	G	.2	100	
	N	7744	A	CRIB ACCELERATION 6		F		M4	4	G	.2	100	
	N	7829	A	SILO-L/P ACCEL #1		O		M50	50	G	2.5	2K	X
	N	7830	A	SILO-L/P ACCEL #2		O		M50	50	G	2.5	2K	X
	N	7831	A	SILO-L/P ACCEL #3		O		M50	50	G	2.5	2K	X
	N	7832	A	SILO-L/P ACCEL #4		O		M50	50	G	2.5	2K	X
	N	7833	A	SILO-L/P ACCEL #5		O		M50	50	G	2.5	2K	X
	N	7834	A	SILO-L/P ACCEL #6		O		M50	50	G	2.5	2K	X
	N	7835	A	CRIB ACCELERATION 7		O		M20	20	G	1	2K	X
	N	7836	A	CRIB ACCELERATION 8		O		M20	20	G	1	2K	X
	N	7837	A	CRIB ACCELERATION 9		O		M20	20	G	1	2K	X
	N	7838	A	CRIB ACCELERATION 10		O		M20	20	G	1	2K	X
	N	7839	A	CRIB ACCELERATION 11		O		M5	5	G	.25	2K	X
	N	7840	A	CRIB ACCELERATION 12		O		M5	5	G	.25	2K	X
	N	7842	A	SILO L/P ACCEL 21				M5	5	G	3%	100	
	N	7843	A	SILO L/P ACCEL 22				M5	5	G	3%	100	

REPORT NO OSTF-2 L/L COMP DATE 25 SEP 62 PAGE 9

VEHICLE	SYSTEM	MEASUREMENT NUMBER	TYPE MEASUREMENT	DESCRIPTION	FLIGHT/SEC	SUBCARRIER/TRACE	COMM PIN/CHANNEL	MEASUREMENT RANGE LOW	MEASUREMENT RANGE HIGH	UNITS OF FUNCTION	ACCURACY	RATE OF CHANGE OR FREQUENCY OF FUNCTION	571194
N		7844	A	SILO L/P ACCEL Z3				M5	5	G	3%	100	
N		7845	A	SILO L/P ACCEL Z4				M5	5	G	3%	100	
N		7846	A	SILO L/P ACCEL X1				M5	5	G	3%	100	
N		7847	A	SILO L/P ACCEL X2				M20	20	G	3%	2K	
N		7848	A	SILO L/P ACCEL Y1				M5	5	G	3%	100	
N		7849	A	SILO L/P ACCEL Y2				M20	20	G	3%	2K	
N		7912	A	CTRWEIGHT VERT ACCEL				0	2	G		5	
N		7913	A	CTRWEIGHT LAT ACCEL				0	.5	G		5	
N		7914	A	CTRWEIGHT TRANS ACC				0	.5	G		5	
N		7803	B	L/P DRIVE MOTOR RPM		S		0	1800	RPM	1%	SLO	X X X
N		7975	C	29 VDC CURRENT		F				AMP	10%		
N		7900	D	CRIB UPPER DEFL #1				0	10	IN	.4	2	
N		7901	D	CRIB UPPER DEFL #2				0	10	IN	.4	2	
N		7902	D	CRIB UPPER DEFL #3				M8	8	IN	.4	2	
N		7903	D	CRIB UPPER DEFL #4				M8	8	IN	.4	2	
N		7904	D	CRIB LOWER DEFL #1				M8	8	IN	.4	2	
N		7905	D	CRIB LOWER DEFL #2				M8	8	IN	.4	2	
N		7906	D	CRIB LOWER DEFL #3				M8	8	IN	.4	2	
N		7907	D	CRIB LOWER DEFL #4				M8	8	IN	.4	2	
N		7908	D	L/P DISPLACEMENT		S		0	140	FT		2	X X X
N		7917	D	VERTICAL LOCK POS A				0	10	IN			
N		7918	D	VERTICAL LOCK POS B				0	10	IN			
N		7919	D	VERTICAL LOCK POS C				0	10	IN			
N		7920	D	VERTICAL LOCK POS D				0	10	IN			
N		7935	D	TENSION EQUALIZER				0	6	IN		100	
N		7805	E	DRIVE SYS PWR 3 PH				0	350	KW	2%	SLO	
N		7911	E	MOTOR POWER		F		0	500	V		60	
N		7952	E	HI-LINE POWER		F				E	10%		

GENERAL DYNAMICS | ASTRONAUTICS

REPORT NO. OSTF-2 L/L COMP DATE 26 SEP 62 PAGE 10

VEHICLE	SYSTEM	MEASUREMENT NUMBER	TYPE MEASUREMENT	DESCRIPTION	TLM / SEC	SUBCARRIER / TRACK	COMM PIN / CHANNEL	MEASUREMENT RANGE LOW	MEASUREMENT RANGE HIGH	UNITS OF FUNCTION	ACCURACY	RATE OF CHANGE OR FREQUENCY OF FUNCTION	5	7	1	3	8	3
	N	7953	E	INSTR-BLDG POWER		F				E	10%							
	N	7954	E	UTILITY-BLDG POWER		F				E	10%							
	N	7974	E	400 CYCLE POWER		F				E	10%							
	N	7804	F	DRIVE MOTOR TORQUE		S		M6K	8.5K	1LB	1%	SLO	X	X	X			
	N	7532	I	LIGHT INTENSITY				0	500	FC	1.0							
	N	7046	J	B1 INLET AIR REL HUM				0	100	%	1	SLO						
	N	7685	J	SILO UPPER RH		P		0	100	%	2	SLO						
	N	7800	J	MSL COMPARTMENT RH		P		0	100	%	2	SLO						
	N	7802	J	SILO LOWER RH		P		0	100	%	2	SLO						
	N	7980	L	7 IN MOTION UP FAST		F		0	3	IN	1%							
	N	7981	L	7 IN MOTION UP SLOW		F		0	1	IN	1%							
	N	7982	L	7 IN MOTION DOWN SLO		F		0	1	IN	1%							
	N	7544	N	CRIB MOTION CAMERA 1				0	8	IN	.25							
	N	7545	N	CRIB MOTION CAMERA 2				0	8	IN	.25							
	N	7747	N	TV CAMERA 1									X	X	X			
	N	7748	N	TV CAMERA 2									X	X	X			
	N	7749	N	TV CAMERA 3									X	X	X			
	N	7750	N	TV CAMERA 4									X	X	X			
	N	7751	N	TV CAMERA 5									X	X	X			
	N	7752	N	TV CAMERA 6									X	X	X			
	N	7753	N	TV CAMERA 7									X	X	X			
	N	7754	N	LAUNCH CONSOLE RH						FPS			X	X	X			
	N	7755	N	LAUNCH CONSOLE LH						FPS			X	X	X			
	N	7983	N	ALIN GRP TILT CAMERA									X	X	X			
	N	7035	P	TANK DIFFERENTIAL P		V		0	5	PID			X	X	X			
	N	7230	P	CRIB AMB PRESS #1		F		0	25	PIA	1	10	X	X				

GENERAL DYNAMICS | ASTRONAUTICS

REPORT NO. OSTF-2 L/L COMP DATE 26 SEP 62 PAGE 11

VEHICLE SYSTEM	MEASUREMENT NUMBER	TYPE MEASUREMENT	DESCRIPTION	TLM / BSC	SUBCARRIER / TRACE	COMM PM / CHANNEL	MEASUREMENT RANGE LOW	MEASUREMENT RANGE HIGH	UNITS OF FUNCTION	ACCURACY	RATE OF CHANGE OR FREQUENCY OF FUNCTION	571383		
N	7231	P	CRIB AMB PRESS #2		F		0	25	PIA	1	10	X	X	
N	7232	P	CRIB AMB PRESS #3		F		0	25	PIA	1	10	X	X	
N	7233	P	CRIB AMB PRESS #4		F		0	25	PIA	1	10	X	X	
N	7234	P	CRIB AMB PRESS #5		F		0	25	PIA	1	10	X	X	
N	7235	P	CRIB AMB PRESS #6		F		0	25	PIA	1	10	X	X	
N	7530	P	LOX TOPG TANK LEVEL		S		0	15	PID	5%	SLO			
N	7050	R	AIG AIR FLOW IN QII		F		100	400	CFM	15	SLO			
N	7155	R	AIG AIR FLOW IN QIII		F		200	500	CFM	15	SLO			
N	7654	R	GO2 VENT				0	10K	CFM	300	SLO			
N	7655	R	EF 40, 41 EXHAUST				0	13K	CFM	400	SLO			
N	7656	R	EF 30 EXHAUST				0	35K	CFM	1K	SLO			
N	7756	S	CRIB LOAD CELL #1		F		0	150	KIP	5%	20			
N	7757	S	CRIB LOAD CELL #2		F		0	150	KIP	5%	20			
N	7758	S	CRIB LOAD CELL #3		F		0	150	KIP	5%	20			
N	7759	S	CRIB LOAD CELL #4		F		0	150	KIP	5%	20			
N	7923	S	CABLE STRAIN PORT				0	100	KPS	2%	SLO			
N	7958	S	FACIL MSL SPRG ST Q1				M20	155	KPS		100			
N	7959	S	FACIL MSL SPRG ST Q2				M20	155	KPS		100			
N	7960	S	FACIL MSL SPRG ST Q3				M20	155	KPS		100			
N	7961	S	FACIL MSL SPRG ST Q4				M20	155	KPS		100			
N	7962	S	LOAD CELL QUAD 1 L/P		F		M20	155	KPS		100			
N	7963	S	LOAD CELL QUAD 2 L/P		F		M20	155	KPS		100			
N	7964	S	LOAD CELL QUAD 3 L/P		F		M20	155	KPS		100			
N	7965	S	LOAD CELL QUAD 4 L/P		F		M20	155	KPS		100			
N	7032	T	GUIDANCE POD EXHAUST		S		40	75	DGF		SLO			
N	7048	T	AIG POD INLET QII		S		40	90	DGF	.5	SLO			
N	7154	T	B1 AIR AT RH MEAS		S		40	90	DGF	.5	SLO			
N	7156	T	AIG POD INLET QIII		S		40	90	DGF	.5	SLO			
N	7159	T	VENT SYS GOX @ ELBO		S		M380	M80	DGF	6	SLO			

GENERAL DYNAMICS | ASTRONAUTICS

REPORT NO. OSTF-2 L/L COMP

DATE 26 SEP 62

PAGE 12

VEHICLE	SYSTEM	MEASUREMENT NUMBER	TYPE MEASUREMENT	DESCRIPTION	TLM / REC	SUBCARRIER / TRACE	COMM PIN / CHANNEL	MEASUREMENT RANGE LOW	MEASUREMENT RANGE HIGH	UNITS OF FUNCTION	ACCURACY	RATE OF CHANGE OR FREQUENCY OF FUNCTION
	N	7160	T	VNT SYS GOX @ FAN IN		S		M380	M80	DGF	6	SLO
	N	7161	T	VNT SYS GOX @ GAT IN		S		M300	300	DGF	12	SLO
	N	7579	T	AIR DUCT IN		T		0	200	DGF	2.5	
	N	7580	T	AIR DUCT OUT		T		0	200	DGF	2.5	
	N	7581	T	SILO Q II LVL-1		T		0	200	DGF	2.5	
	N	7582	T	SILO Q II LVL-2		T		0	200	DGF	2.5	
	N	7583	T	SILO Q II LVL-3		T		0	200	DGF	2.5	
	N	7584	T	SILO Q II LVL-4		T		0	200	DGF	2.5	
	N	7585	T	SILO Q II LVL-5		T		0	200	DGF	2.5	
	N	7586	T	SILO Q II LVL-6		T		0	200	DGF	2.5	
	N	7587	T	SILO Q II LVL-7		T		0	200	DGF	2.5	
	N	7588	T	SILO Q II LVL-8		T		0	200	DGF	2.5	
	N	7589	T	HT REC WATER IN		D		50	250	DGF	10	SLO
	N	7590	T	ELEC BLR WATER OUT		D		50	250	DGF	10	SLO
	N	7597	T	MSL COMP LVL-1		T		0	200	DGF	2.5	
	N	7598	T	MSL COMP LVL-2		T		0	200	DGF	2.5	
	N	7599	T	MSL COMP LVL-3		T		0	200	DGF	2.5	
	N	7600	T	MSL COMP LVL-4		T		0	200	DGF	2.5	
	N	7601	T	MSL COMP LVL-5		T		0	200	DGF	2.5	
	N	7602	T	MSL COMP LVL-6		T		0	200	DGF	2.5	
	N	7603	T	MSL COMP LVL-7		T		0	200	DGF	2.5	
	N	7604	T	MSL COMP LVL-8		T		0	200	DGF	2.5	
	N	7605	T	DUST SEP AIR OUT		T		0	200	DGF	2.5	
	N	7606	T	COOLING TOWER H2O IN		T		0	200	DGF	2.5	
	N	7607	T	MSL COMP AIR SUPPLY		T		0	200	DGF	2.5	
	N	7620	T	H2O HEAT RECLAIMER		D		50	250	DGF	4	
	N	7621	T	ELEC EQUIP AIR IN #1		P		0	200	DGF	3	SLO
	N	7622	T	ELEC EQUIP AIR IN #2		P		25	125	DGF	3	SLO
	N	7623	T	ELEC EQUIP AIR IN #3		P		25	125	DGF	3	SLO
	N	7624	T	ELEC EQUIP AIR IN #4		P		25	125	DGF	3	SLO
	N	7625	T	ELEC EQUIP AIR IN #5		P		25	125	DGF	3	SLO
	N	7626	T	ELEC EQUIP AIR OUT#1		P		25	125	DGF	3	SLO

REPORT NO. OSTF-2 L/L COMP DATE 26 SEP 62 PAGE 13

VEHICLE	SYSTEM	MEASUREMENT NUMBER	TYPE MEASUREMENT	DESCRIPTION	TLM / REC	SUBCARRIER / TRACE	COMM PIN / CHANNEL	MEASUREMENT RANGE LOW	MEASUREMENT RANGE HIGH	UNITS OF FUNCTION	ACCURACY	RATE OF CHANGE OR FREQUENCY OF FUNCTION	571383		
	N	7627	T	ELEC EQUIP AIR OUT#2		P		25	125	DGF	3	SLO			
	N	7628	T	ELEC EQUIP AIR OUT#3		P		25	125	DGF	3	SLO			
	N	7629	T	ELEC EQUIP AIR OUT#4		P		25	125	DGF	3	SLO			
	N	7630	T	ELEC EQUIP AIR OUT#5		P		25	125	DGF	3	SLO			
	N	7641	T	POD AIR COND H20 IN		D		30	120	DGF	3	SLO			
	N	7642	T	POD AIR COND H20 OUT		D		30	120	DGF	3	SLO			
	N	7643	T	CC 10 COLD H20 OUT		T		0	200	DGF	3	SLO			
	N	7644	T	CC 40 COLD H20 OUT		T		0	200	DGF	3	SLO			
	N	7645	T	CC 41 COLD H20 OUT		T		0	200	DGF	3	SLO			
	N	7646	T	HC 40 HOT H20 IN		T		0	200	DGF	3	SLO			
	N	7647	T	HC 40 HOT H20 OUT		T		0	200	DGF	3	SLO			
	N	7649	T	WCU 50 H20 OUT		T		0	200	DGF	3	SLO			
	N	7650	T	WCU 50, 51 H20 IN		T		0	200	DGF	3	SLO			
	N	7651	T	LCC COLD H20 OUT		S		0	200	DGF	3	SLO			
	N	7652	T	GO2 VENT AT A & E		S		M300	100	DGF	12	SLO			
	N	7653	T	GO2 VENT AT BLAST DR		S		M300	100	DGF	12	SLO			
	N	7746	T	COOLING TOWR H20 OUT		S		0	200	DGF	2.5				
	N	1870	V	TRL WIRE NOISE 1		F		0	10	MV	2%	200	X	X	X
	N	7002	X	SELECT A BUTTON		R		OFF	ON	VDC		STP	X	X	X
	N	7003	X	SELECT B BUTTON		R		OFF	ON	VDC		STP	X	X	X
	N	7024	X	START BUTTON		R		OFF	ON	VDC		STP	X	X	X
	N	7028	X	COMMIT START BUTTON		R		OFF	ON	VDC		STP	X	X	X
	N	7030	X	ALARM RESET SWITCH		R		OFF	ON	VDC		STP	X	X	X
	N	7042	X	START ABORT SWITCH		R		OFF	ON	VDC		STP	X	X	X
	N	7046	X	SILO DOORS OPEN		R		OFF	ON	VDC		STP	X	X	X
	N	7047	X	SILO DOORS CLSD		R		OFF	ON	VDC		STP	X	X	X
	N	7048	X	PAD HTR 2 RATE GYRO		R		OFF	ON	VDC		STP	X		
	N	7051	X	COM STA 1 ON-OFF		R		ON	OFF	VDC		STP			
	N	7052	X	COM STA 2 ON-OFF		R		ON	OFF	VDC		STP			
	N	7053	X	COM STA 3 ON-OFF		R		ON	OFF	VDC		STP			

REPORT NO. OSTF-2 L/L COMP

DATE 26 SEP 62

PAGE 14

VEHICLE	SYSTEM	MEASUREMENT NUMBER	TYPE MEASUREMENT	DESCRIPTION	TLM / REC	SUBCARRIER / TRACK	COMM PIN / CHANNEL	MEASUREMENT RANGE LOW	MEASUREMENT RANGE HIGH	UNITS OF FUNCTION	ACCURACY	RATE OF CHANGE OR FREQUENCY OF FUNCTION	571383		
	N	7054	X	COM STA 4 ON-OFF		R		ON	OFF	VDC		STP			
	N	7055	X	COM STA 5 ON-OFF		R		ON	OFF	VDC		STP			
	N	7056	X	COM STA 6 ON-OFF		R		ON	OFF	VDC		STP			
	N	7057	X	COM STA 7 ON-OFF		R		ON	OFF	VDC		STP			
	N	7058	X	COM STA 8 ON-OFF		R		ON	OFF	VDC		STP			
	N	7059	X	COM STA 9 ON-OFF		R		ON	OFF	VDC		STP			
	N	7060	X	COM STA 10 ON-OFF		R		ON	OFF	VDC		STP			
	N	7061	X	COM STA 11 ON-OFF		R		ON	OFF	VDC		STP			
	N	7062	X	COM STA 12 ON-OFF		R		ON	OFF	VDC		STP			
	N	7063	X	COM STA 13 ON-OFF		R		ON	OFF	VDC		STP			
	N	7064	X	COM STA 14 ON-OFF		R		ON	OFF	VDC		STP			
	N	7065	X	COM STA 15 ON-OFF		R		ON	OFF	VDC		STP			
	N	7066	X	COM STA 16 ON-OFF		R		ON	OFF	VDC		STP			
	N	7067	X	COM STA 17 ON-OFF		R		ON	OFF	VDC		STP			
	N	7068	X	COM STA 18 ON-OFF		R		ON	OFF	VDC		STP			
	N	7069	X	COM STA 19 ON-OFF		R		ON	OFF	VDC		STP			
	N	7070	X	COM STA 20 ON-OFF		R		ON	OFF	VDC		STP			
	N	7162	X	LOX/GOX @ VENT FAN		R		OFF	ON	VDC		STP			
	N	7163	X	LOX/GOX @ VENT FAN		R		OFF	ON	VDC		STP			
	N	7500	X	ZONE CHECK LS CLS		R		ON	OFF	VDC		STP	X	X	
	N	7501	X	1000 IN LS CLS		R		ON	OFF	VDC		STP	X	X	
	N	7502	X	HI SPD DECEL [illegible] CLS		R		ON	OFF	VDC		STP	X	X	
	N	7503	X	UPR OSPD ZONE LS CLS		R		ON	OFF	VDC		STP	X	X	
	N	7504	X	OVRSPD SEN ENLR		R		ON	OFF	VDC		STP	X	X	
	N	7505	X	BOILOFF VLV CLSD		R		ON	OFF	VDC		STP	X	X	
	N	7506	X	DIFF PRESS NOT LOW		R		ON	OFF	VDC		STP	X	X	
	N	7507	X	M/L COMMIT START		R		ON	OFF	VDC		STP	X	X	
	N	7508	X	AUTOMATIC		R		ON	OFF	VDC		STP	X	X	
	N	7509	X	RDY FOR COMMIT		R		ON	OFF	VDC		STP	X	X	X
	N	7510	X	PWR TO INTERNAL		R		ON	OFF	VDC		STP	X	X	
	N	7511	X	PWR TO EXTERNAL		R		ON	OFF	VDC		STP	X	X	
	N	7512	X	COMMIT LOCKUP		R		ON	OFF	VDC		STP	X	X	

GENERAL DYNAMICS | ASTRONAUTICS

REPORT NO. OSTF-2 L/L COMP DATE 26 SEP 62 PAGE 15

VEHICLE	SYSTEM	MEASUREMENT NUMBER	TYPE MEASUREMENT	DESCRIPTION	PLM / REC	SUBCARRIER / TRACK	COMM PIN / CHANNEL	MEASUREMENT RANGE LOW	MEASUREMENT RANGE HIGH	UNITS OF FUNCTION	ACCURACY	RATE OF CHANGE OR FREQUENCY OF FUNCTION	57	13	83
	N	7513	X	M/L DWN & LOCKED		R		ON	OFF	VDC		STP	X	X	
	N	7514	X	A/P ON AMBER		R		ON	OFF	VDC		STP	X	X	X
	N	7515	X	LWR FUEL TK PRESS		R		ON	OFF	VDC		STP	X	X	
	N	7516	X	RAISE FUEL TK PRESS		R		ON	OFF	VDC		STP	X	X	
	N	7517	X	GUID FAIL MARGINAL		R		ON	OFF	VDC		STP	X	X	
	N	7518	X	A/P FAIL MARGINAL		R		ON	OFF	VDC		STP	X	X	
	N	7519	X	F/P SAFE		R		ON	OFF	VDC		STP	X	X	
	N	7520	X	INST AIR BELL 50		R		ON	OFF	VDC		STP	X	X	
	N	7521	X	A/P FAIL		R		ON	OFF	VDC		STP	X	X	
	N	7522	X	HE VLV 14 OPEN		R		ON	OFF	VDC		STP	X	X	
	N	7523	X	DC AT MSL		R		ON	OFF	VDC		STP	X	X	
	N	7524	X	R/V BATT TEMP		R		ON	OFF	VDC		STP	X	X	X
	N	7525	X	VENT HE BTLES		R		ON	OFF	VDC		STP	X	X	
	N	7526	X	HYD PRESS		R		ON	OFF	VDC		STP	X	X	
	N	7527	X	GUID STANDBY		R		ON	OFF	VDC		STP	X	X	
	N	7528	X	M/L UP & LOCKED		R		ON	OFF	VDC		STP	X	X	
	N	7529	X	PNEU INT GRN		R		ON	OFF	VDC		STP	X	X	X
	N	7530	X	PNEU PH2 AMBER		R		ON	OFF	VDC		STP	X	X	X
	N	7531	X	HE LOAD AMBER		R		ON	OFF	VDC		STP	X	X	X
	N	7532	X	PROG ARMED AMBER		R		ON	OFF	VDC		STP	X	X	
	N	7533	X	ENG START AMBER		R		ON	OFF	VDC		STP	X	X	X
	N	7534	X	GUID COMMIT GREEN		R		ON	OFF	VDC		STP	X	X	
	N	7535	X	PWR INT GREEN		R		ON	OFF	VDC		STP	X	X	X
	N	7536	X	A/P TEST AMBER		R		ON	OFF	VDC		STP	X	X	
	N	7537	X	GUID RDY AMBER		R		ON	OFF	VDC		STP	X	X	
	N	7984	X	MISSILE AWAY		R		OFF	ON	VDC		STP	X	X	X
	N	7985	X	MISSILE ON STAND		R		OFF	ON	VDC		STP	X	X	X
	N	7072	Y	COM SYS VOICE REC 1		A									
	N	7073	Y	COM SYS VOICE REC 2		A									
	N	7074	Y	COM SYS VOICE REC 3		A									
	N	7075	Y	COM SYS VOICE REC 4		A									

REPORT NO. OSTF-2 L/L COMP DATE 26 SEP 62 PAGE 16

VEHICLE	SYSTEM	MEASUREMENT NUMBER	TYPE MEASUREMENT	DESCRIPTION	TLM / REC	SUBCARRIER / TRACK	COMM PIN / CHANNEL	MEASUREMENT RANGE LOW	MEASUREMENT RANGE HIGH	UNITS OF FUNCTION	ACCURACY	RATE OF CHANGE OR FREQUENCY OF FUNCTION	571383		
	N	7076	Y	COM SYS VOICE REC 5		A									
	N	7077	Y	COM SYS VOICE REC 6		A									
	N	7078	Y	COM SYS VOICE REC 7		A									
	N	7079	Y	COM SYS VOICE REC 8		A									
	N	7080	Y	COM SYS VOICE REC 9		A									
	N	7081	Y	COM SYS VOICE REC 10		A									
	N	7533	Y	SOUND INTENSITY		A		24	140	DB	1.0				
	P	7137	B	B1 PUMP SPEED LO		F		0	200	RPM	5%	1KC			
	P	7138	B	B2 PUMP SPEED LO		F		0	200	RPM	5%	1KC			
	P	1529	D	S MAIN LOX VLV		F		0	90	DEG	2	SLO	X		
	P	1830	D	S FUEL VLV POS		D		18	46	DEG	1	SLO	X		
	P	1206	O	S ENG LOX DOME		F		M80	80	G	4	2KC	X	X	X
	P	1208	O	B1 ENG LOX DOME		F		M80	80	G	4	2KC	X	X	X
	P	1209	O	B2 ENG LOX DOME		F		M80	80	G	4	2KC	X		
	P	1002	P	B1 FUEL PUMP INLET		FS		0	150	PIA	3	1KC	X	X	X
	P	7002	P	B1 FUEL PUMP INLET		F		0	100	PIG	2	SLO			
	P	1006	P	S THRUST CHAMBER		DF		0	1000	PIA	20	SLO	X	X	X
	P	1038	P	B2 FUEL PUMP DISC		FS		0	1000	PIG	20	100	X	X	X
	P	1039	P	B1 FUEL PUMP DISC		F		0	1000	PIG	20	100	X	X	X
	P	7055	P	S FUEL PUMP INLET		F		0	100	PIG	2	SLO			
	P	1056	P	S LOX PUMP INLET		F		0	150	PIG	3	SLO	X	X	X
	P	1059	P	B2 THRUST CHAMBER		DF		0	600	PIG	20	1KC	X	X	X
	P	1060	P	B1 THRUST CHAMBER		DF		0	600	PIG	20	1KC	X	X	X
	P	1091	P	B1 LOX INJ MANIFOLD		F		0	1500	PIG	30	1KC	X	X	X
	P	1092	P	B2 LOX INJ MANIFOLD		F		0	1500	PIG	30	1KC	X	X	X
	P	7105	P	TCU CTL MANIFOLD		F		0	1200	PIG	24	SLO			
	P	7106	P	TCU INLET LOX PRESS		F		0	200	PIG	4	10			
	P	7107	P	TCU LOX FILTER IN		F		0	200	PIG	4	10			

GENERAL DYNAMICS | ASTRONAUTICS

REPORT NO. OSTF-2 L/L COMP DATE 26 SEP 62 PAGE 17

VEHICLE	SYSTEM	MEASUREMENT NUMBER	TYPE MEASUREMENT	DESCRIPTION	TLM / REC	SUBCARRIER / TRACE	COMM PIN / CHANNEL	MEASUREMENT RANGE LOW	MEASUREMENT RANGE HIGH	UNITS OF FUNCTION	ACCURACY	RATE OF CHANGE OR FREQUENCY OF FUNCTION	57	13	83
	P	7108	P	LOX L/P DISC IN PRES		F		0	200	PIG	4	10		X	
	P	7135	P	MAIN LOX LN DRAIN PR		F		0	200	PIG	4	10			
	P	1155	P	B1 GAS GEN COMBUSTOR		F		0	1000	PIG	20	SLO	X	X	X
	P	1184	P	B2 GAS GEN COMBUSTOR		F		0	1000	PIG	20	SLO	X	X	X
	P	1200	P	ENG COMP AMBIENT		F		0	20	PIA	0.5	100	X		
	P	7306	P	B2 FUEL PUMP INLET		F		0	100	PIA	2	SLO			
	P	1337	P	S GG LOX INJ MANFOLD		F		0	1000	PIG	20	SLO	X	X	X
	P	1351	P	S LOX INJ MANIFOLD		F		0	1500	PIG	30	SLO	X	X	X
	P	1463	P	SGG FUEL INJ MAN		F		0	1000	PIA	15	SLO	X		
	P	7546	P	GN2 STORAGE TK DISCH		F		0	5000	PIG	100	SLO			
	P	7549	P	LOX STORAGE TANK ULL		S		0	200	PIG	4	SLO	X	X	X
	P	7564	P	LOX ST TK TO MSL DP		S		0	27	PID	120	SLO	X	X	X
	P	7565	P	LOX XFER LINE TO MSL		F		0	200	PIG	4	SLO			
	P	7567	P	FUEL LVL TANK ULLAGE		F		0	75	PIG	1	SLO			
	P	7578	P	LOX IN TO ELEV DISC		F		0	200	PIG	4	SLO	X		
	P	7682	P	DP ON LOX TANK		F		0	2	PID	.04	SLO			
	P	7688	P	GND FUEL PUMP OUT				0	150	PIG	3	SLO			
	P	7689	P	GND FUEL PUMP IN				0	100	PIG	2	SLO			
	P	7690	P	GND FUEL FILTER DP		F		0	25	PID	.5	SLO*			
	P	7691	P	FUEL FILL LINE IN		F		0	100	PIG	2				
	P	7692	P	FUL FILL @ ELEV DISC		F		5	125	PIG	2	5			
	P	7693	P	FUEL FILL LINE @ ROD		F		5	125	PIG	2	5			
	P	7696	P	LOX TOP LINE ROD		F		0	200	PIG	4	SLO			
	P	7697	P	MAIN LOX LINE @ ROD				0	200	PIG	10	5			
	P	7699	P	MAIN LOX FILTER DP		D		0	25	PID	.5	SLO	X	X	
	P	7700	P	LOX RAPID LD VLV DP		F		0	25	PID	.5	SLO			
	P	7701	P	LOX FINE LD VLV DP		F		0	25	PID	.5	SLO			
	P	7706	P	LOX DRAIN VLV DP		F		0	10	PID	.2	SLO			
	P	7707	P	LOX FILL FILTER DP		F		0	10	PID	.2	SLO			
	P	7709	P	LOX TOP TK ULLAGE		FS		0	200	PIG	4	SLO	X	X	X
	P	7710	P	GND LOX TK PRESS LN		F		0	200	PIG	4				
	P	7711	P	LOX TOP TK PRESS LN		F		0	200	PIG	4				

REPORT NO. OSTF-2 L/L COMP DATE 26 SEP 62 PAGE 18

VEHICLE	SYSTEM	MEASUREMENT NUMBER	TYPE MEASUREMENT	DESCRIPTION	SAMPLE/SEC MAGNETICS/TRACE	COMM PAD/CHANNEL	MEASUREMENT RANGE LOW	MEASUREMENT RANGE HIGH	UNITS OF FUNCTION	ACCURACY	RATE OF CHANGE OF PRESENT OF FUNCTION	571383
P	7907	P	B1 LOX PUMP INLET	F		0	200	PIA	2%	12C		
P	7909	P	FUEL VLV F1 INLET	F		0	100	PIG	2	SLO		
P	7911	P	FUEL PRESN TK DISCH	F		0	5000	PIG	100	SLO		
P	7913	P	LOX FINE LV L1 IN	F		0	300	PIG	4	10	X	
P	7914	P	LOX RAPID LV L2 IN	F		0	300	PIG	4	10		
P	7915	P	LOX DRAIN VLV L16 IN	F		0	300	PIG	4	10		
P	7916	P	LOX DRN VLV L16 OUT	F		0	300	PIG	4	10		
P	7917	P	LOX STOR TK FV L7 IN	F		0	150	PIG	4	10		
P	7918	P	LOX FILTER L19 IN	D		0	200	PIA				
P	7972	P	LOX TK PRESS VLV IN	F		0	5000	PIG	100	SLO		
P	7104	R	LOX TOP FL/RT	F		0	2	GPM	6	SLO	X	
P	7109	R	LOX TOP BLEED FL/RT	F		1	10	GPM	.2	SLO	X	
P	7569	R	GND FUEL SUPPLY			0	350	GPM	7			
P	7183	S	LOX ST TK PR LINE A	F		0	3000	UIN	10%	200		
P	7184	S	LOX ST TK PR LINE B	F		0	3000	UIN	10%	200		
P	7113	T	TCU LOX IN TEMP	F		M325	M265	DGF	1	SLO		
P	7114	T	LOX TOP L/P DISC IN	F		M325	M265	DGF	1	SLO		
P	7134	T	B1 LOX PUMP INLET	F		M325	M275	DGF	1	SLO		
P	7304	T	SUS LOX PUMP INLET	F		M320	M270	DGF	1	SLO		
P	7305	T	B2 LOX PUMP INLET	F		M325	M275	DGF	1	SLO		
P	1325	T	ENG COMP AMBIENT	FS		0	500	DGF	3%	SLO	X X X	
P	1330	T	S LOX PUMP INLET	BS		M320	M275	DGF	.7	SLO	X X X	
P	7547	T	GN2 STORAGE TK DISCH	F		M100	150	DGF	5	SLO		
P	7566	T	FUEL LINE TO MSL	F		0	150	DGF	4	SLO		
P	7571	T	MAIN LOX IN @ DISC	F		M300	M265	DGF	1	SLO	X	
P	7572	T	MISSILE TANK FUEL	F		0	150	DGF	4	SLO		
P	7698	T	MAIN LOX LINE @ ROD	F		M300	M265	DGF	1	SLO		
P	7702	T	LOX TOP LINE ROD	F		M325	M265	DGF	1	SLO		
P	1711	T	B1 NACELLE AMBIENT	DF		0	500	DGF	3%	SLO	X X X	

GENERAL DYNAMICS | ASTRONAUTICS

REPORT NO OSTF-2 L/L COMP DATE 26 SEP 62 PAGE 19

VEHICLE	SYSTEM	MEASUREMENT NUMBER	TYPE MEASUREMENT	DESCRIPTION	TLM / REC	SUBCARRIER / TRACE	COMM PIN / CHANNEL	MEASUREMENT RANGE LOW	MEASUREMENT RANGE HIGH	UNITS OF FUNCTION	ACCURACY	RATE OF CHANGE OR FREQUENCY OF FUNCTION	5	7	13	8	3
	P	1712	T	B2 NACELLE AMBIENT		DF		0	500	DGF	3%	SLO	X	X	X		
	P	7802	T	SKIN B1 HYPRGOL CTL		F		M200	200	DGF	8	SLO					
	P	7803	T	SKIN B2 HYPRGOL CTL		F		M200	200	DGF	8	SLO					
	P	7806	T	SKIN S HYPRGOL CTL		F		M200	200	DGF	8	SLO					
	P	7812	T	AMB S HYD CTL MAN		S		M200	200	DGF	8	SLO					
	P	7813	T	AMB QUAD 4 STA 1205		S		M200	200	DGF	8	SLO					
	P	7814	T	AMB QUAD 3 STA 1175		S		M200	200	DGF	8	SLO					
	P	7815	T	AMB QUAD 2 STA 1245		S		M200	200	DGF	8	SLO					
	P	7816	T	AMB QUAD 1 STA 1248		S		M200	200	DGF	8	SLO					
	P	7817	T	AMB B1 NAC STA 1245		S		M200	200	DGF	8	SLO					
	P	7818	T	AMB B2 NAC STA 1245		S		M200	200	DGF	8	SLO					
	P	7819	T	AMB QUAD 2 STA 1234		S		M200	200	DGF	8	SLO					
	P	7820	T	AMB B2 NAC STA 1156		S		M200	200	DGF	8	SLO					
	P	7821	T	AMB B1 NAC STA 1156		S		M200	200	DGF	8	SLO					
	P	7822	T	AMB B1 FUL CTL VLV		S		M200	200	DGF	8	SLO					
	P	7823	T	AMB B2 FUL CTL VLV		S		M200	200	DGF	8	SLO					
	P	7824	T	AMB QUAD 4 STA 1260		S		M200	200	DGF	8	SLO					
	P	7825	T	SKIN B1 NAC STA 1220		S		M200	200	DGF	8	SLO					
	P	7826	T	SKIN B2 NAC STA 1220		S		M200	200	DGF	8	SLO					
	P	7827	T	SKIN X AXIS STA 1200		S		M200	200	DGF	8	SLO					
	P	7908	T	FUEL PRESN TK DISCH		S		M100	150	DGF	5	SLO					
	P	7126	V	S IGN STAGE CTL VOLT		F		0	30	VDC	1	100	X				
	P	7115	X	RAPID TOP VLV OPEN		R		ON	OFF	VDC		STP	X	X	X		
	P	7116	X	RAPID TOP VLV CLSD		R		ON	OFF	VDC		STP	X	X	X		
	P	7117	X	TOPPING VLV OPEN		R		ON	OFF	VDC		STP	X	X	X		
	P	7118	X	TOPPING VLV CLSD		R		ON	OFF	VDC		STP	X	X	X		
	P	7129	X	VENT VLV N-80 OPEN		R		ON	OFF	VDC		STP	X	X	X		
	P	7130	X	VENT VLV N-80 CLSD		R		ON	OFF	VDC		STP	X	X	X		
	P	7131	X	LN DRN PRES N60 OPEN		R		ON	OFF	VDC		STP	X	X	X		
	P	7132	X	LN DRN PRES N60 CLSD		R		ON	OFF	VDC		STP	X	X	X		

GENERAL DYNAMICS | ASTRONAUTICS

REPORT NO. OSTF-2 L/L COMP DATE 26 SEP 62 PAGE 20

VEHICLE	SYSTEM	MEASUREMENT NUMBER	TYPE MEASUREMENT	DESCRIPTION	TLM / SEC	SUBCARRIER / TRACE	COMM PIN / CHANNEL	MEASUREMENT RANGE LOW	MEASUREMENT RANGE HIGH	UNITS OF FUNCTION	ACCURACY	RATE OF CHANGE OR FREQUENCY OF FUNCTION	5	2	1	3	8	3
	P	7193	X	LOX TOPG TK VV OPEN		R		OFF	ON	VDC		STP	X	X	X			
	P	7194	X	LOX TOPG TK VV CLSD		R		OFF	ON	VDC		STP	X	X	X			
	P	7195	X	FUEL VALVE F4 OPEN		R		OFF	ON	VDC		STP						
	P	7196	X	FUEL VALVE F4 CLOSED		R		OFF	ON	VDC		STP						
	P	7223	X	LOX STOR TK VV CLSD		R		ON	OFF	VDC		STP	X	X	X			
	P	7225	X	LOX RAPID LV OPEN		R		ON	OFF	VDC		STP	X	X	X			
	P	7226	X	LOX FINE LV OPEN		R		ON	OFF	VDC		STP	X	X	X			
	P	7227	X	LOX RAPID LV CLSD		R		ON	OFF	VDC		STP	X	X	X			
	P	7228	X	LOX FINE LV CLSD		R		ON	OFF	VDC		STP	X	X	X			
	P	7236	X	LOX STOR TK VLV OPEN		R		ON	OFF	VDC		STP	X	X	X			
	P	7238	X	LOX DRAIN VALVE OPEN		R		ON	OFF	VDC		STP	X	X	X			
	P	7240	X	LOX DRAIN VALVE CLSD		R		ON	OFF	VDC		STP	X	X	X			
	P	7241	X	LOX CHLDN VL N1 CLD		R		ON	OFF	VDC		STP	X	X	X			
	P	7251	X	LOX CHLDN VL N2 CLD		R		ON	OFF	VDC		STP	X					
	P	7252	X	LOX CHLDN VL N3 CLD		R		ON	OFF	VDC		STP	X					
	P	7253	X	LOX TPNG VL N50 CLD		R		ON	OFF	VDC		STP	X					
	P	7550	X	BOIL-OFF VLV OPEN		R		OFF	ON	VDC		STP		X	X			
	P	7922	X	FUEL VLV F1 OPEN		R		ON	OFF	VDC		STP						
	P	7923	X	FUEL VLV F1 CLOSED		R		ON	OFF	VDC		STP						
	P	7924	X	FUEL VLV F2 OPEN		R		ON	OFF	VDC		STP						
	P	7925	X	FUEL VLV F2 CLOSED		R		ON	OFF	VDC		STP						
	P	7926	X	FUEL VLV F3 OPEN		R		ON	OFF	VDC		STP						
	P	7927	X	FUEL VLV F3 CLOSED		R		ON	OFF	VDC		STP						
	P	7928	X	FUEL VLV NF4 OPEN		R		ON	OFF	VDC		STP						
	P	7929	X	FUEL VLV NF4 CLOSED		R		ON	OFF	VDC		STP						
	P	7930	X	FUEL VLV NF1 OPEN		R		ON	OFF	VDC		STP						
	P	7931	X	FUEL VLV NF1 CLOSED		R		ON	OFF	VDC		STP						
	P	7932	X	FUEL VLV NF2 OPEN		R		ON	OFF	VDC		STP						
	P	7933	X	FUEL VLV NF2 CLOSED		R		ON	OFF	VDC		STP						
	P	7934	X	FUEL A/B F6D VLV OPN		R		ON	OFF	VDC		STP	X	X	X			
	P	7935	X	FUEL A/B F6D VLV CLS		R		ON	OFF	VDC		STP						
	P	7936	X	FUEL LVL F11 OPEN		R		ON	OFF	VDC		STP						

GENERAL DYNAMICS | ASTRONAUTICS

REPORT NO OSTF-2 L/L COMP DATE 26 SEP 62 PAGE 21

VEHICLE	SYSTEM	MEASUREMENT NUMBER	TYPE MEASUREMENT	DESCRIPTION	TLM / REC	SUBCARRIER / TRACE	COMM PIN / CHANNEL	MEASUREMENT RANGE LOW	MEASUREMENT RANGE HIGH	UNITS OF FUNCTION	ACCURACY	RATE OF CHANGE OR FREQUENCY OF FUNCTION	5	7	13	8	3
	P	7937	X	FUEL SENSOR LS		R		ON	OFF	VDC		STP					
	P	7938	X	FUEL LVL TK FULL		R		ON	FULL			STP					
	P	7939	X	FUEL LVL TK HALF FUL		R		ON	OFF	VDC		STP					
	P	7947	X	LOX STORE TK FULL		R		ON	OFF	VDC		STP	X	X	X		
	P	7957	X	LOX VLV L7 OPEN		R		ON	OFF	VDC		STP					
	P	7958	X	LOX VLV L7 CLOSED		R		ON	OFF	VDC		STP					
	P	7959	X	LOX VLV L6 OPEN		R		ON	OFF	VDC		STP					
	P	7960	X	LOX VLV L6 CLOSED		R		ON	OFF	VDC		STP					
	P	7963	X	LOX A/B F&D VLV OPEN		R		ON	OFF	VDC		STP	X	X	X		
	P	7964	X	LOX A/B F&D VLV CLSD		R		ON	OFF	VDC		STP	X	X	X		
	P	1051	Y	ENG COMPT ACOUST		N		115	160	DB	5%	20K	X	X	X		
	U	7019	N	L/P LOX DISC CAMERA				96		FPS			X				
	U	7020	N	HOT-COLD DISC CAMERA				96		FPS							
	U	7080	P	LOX TANK HEAD		F		0	7	PID	0.1	SLO					
	U	7081	P	FUEL TANK HEAD		F		0	7	PID	1%	SLO					
	U	7126	V	AA COMP 28VDC IN		O		0	40	VDC	2%	1KC					
	U	7134	V	AA TIME SHRD OSC OUT		O		0	1	VDC	.04	8					
	U	7011	X	RAPID FILL LOX CTL-1		R		OFF	ON	VDC		STP	X	X	X		
	U	7012	X	TOPPING LOW CTL-1		R		OFF	ON	VDC		STP	X	X	X		
	U	7013	X	TOPPING HIGH CTL-1		R		OFF	ON	VDC		STP	X	X	X		
	U	7014	X	100% LOX CONTROL-1		R		OFF	ON	VDC		STP	X	X	X		
	U	7015	X	RAPID FILL LOX CTL-2		R		OFF	ON	VDC		STP	X	X	X		
	U	7016	X	TOPPING LOW CTL-2		R		OFF	ON	VDC		STP	X	X	X		
	U	7017	X	TOPPING HIGH CTL-2		R		OFF	ON	VDC		STP	X	X	X		
	U	7018	X	100% LOX CONTROL-2		R		OFF	ON	VDC		STP	X	X	X		
	U	7021	X	FUEL LVL NOT LOW-1		R		OFF	ON	VDC		STP					
	U	7022	X	FUEL LVL NOT LOW-2		R		OFF	ON	VDC		STP					

GENERAL DYNAMICS | ASTRONAUTICS

REPORT NO. OSTF-2 L/L COMP

DATE 26 SEP 62

PAGE 22

SYSTEM	MEASUREMENT NUMBER	TYPE MEASUREMENT	DESCRIPTION	ELM / SEC	SUBCARRIER / TRACK	CAUTION / CHANNEL	MEASUREMENT RANGE LOW	MEASUREMENT RANGE HIGH	UNITS OF FUNCTION	ACCURACY	RATE OF CHANGE OR FREQUENCY OF FUNCTION	5	7	13	8	3
U	7023	X	FUEL LVL TOO HIGH-1		R		OFF	ON	VDC		STP					
U	7024	X	FUEL LVL TOO HIGH-2		R		OFF	ON	VDC		STP					
U	7125	X	AA COMPUTER RESET		F		0	25	VDC	5%	SLO	X	X	X		
U	7132	X	AA STA COUNTER OTP		F		0	25	VDC	5%	SLO	X	X	X		
Y	7052	X	R/V BAT HTR THERMOST		R							X	X	X		
Y	7054	X	LAUNCH CONTROL POWER		R							X	X	X		
Y	7055	X	START COUNTDOWN PWR		R							X	X	X		
Y	7056	X	28 VDC VERIFICATION		R							X	X	X		
Y	7059	X	R/V CONTINUITY		R							X	X	X		
Y	7061	X	MARK 4 R/V		R							X	X	X		
Y	7062	X	R/V TACTICAL		R							X	X	X		
Y	7064	X	115 VAC VERIFICATION		R							X	X	X		
Y	7065	X	START COUNTDOWN VFY		R							X	X	X		
Y	7066	X	TARGET A SET		R							X	X	X		
Y	7067	X	TARGET B SET		R							X	X	X		
Y	7068	X	MARK 3 R/V		R							X	X	X		
Y	7069	X	TARGET A SELECT		R							X	X	X		
Y	7070	X	TARGET B SELECT		R							X	X	X		
Y	7071	X	START COUNTDOWN SIG		R							X	X	X		
Y	7072	X	28 VDC RECEIVED		R							X	X	X		

SECTION 11

CSTF #2 PEN ASSIGNMENTS

This section is a tabulation of all sequence measurements (OFF-ON) and their associated Esterline-Angus recorder pen assignments.

MEASUREMENT IDENTIFICATION

PICK-UP POINT

This indicates the electrical plug number and pin number of the pick-up point provided in the electrical control system for this measurement.

N	7001	X	PRESSURE MODE RED	P140	N	2
N	7002	X	SELECT A BUTTON	P149A	14	3

MEASUREMENT DESCRIPTION

This is a brief, usually abbreviated, description of the measurement.*

PEN NUMBER

This denotes the sequence recorder pen assignment for the measurement.

*NOTE: For a key to abbreviations and coding see the IBM code key of this report.

SEQUENCE PEN LIST
(to be supplied at a later date)

THIS MATERIAL CONTAINS INFORMATION AFFECTING THE NATIONAL DEFENSE OF THE UNITED STATES WITHIN THE MEANING OF THE ESPIONAGE LAWS, TITLE 18, U.S.C., SECTIONS 793 AND 794. THE TRANSMISSION OR REVELATION OF WHICH IN ANY MANNER TO AN UNAUTHORIZED PERSON IS PROHIBITED BY LAW

~~CONFIDENTIAL~~

COUNTDOWN INSTRUMENTATION

BLANK PAGE

APPENDIX A

INSTRUMENTATION CONFIGURATION

IBM CODE KEY

Master tabulations of all performance measurements applicable to all test articles are maintained by the Test Planning Group. Operational tabulations are compiled from these masters for individual missiles. All instrumentation logs are maintained on IBM punched cards. This facilitates rapid sorting, rearrangement, and tabulation of measurements as required for program preparation and data analysis. Such storage necessitates a systematic classification of the measurements and uniformity in method used to describe the many types of measurements. To achieve this, an extensive codi ; of the identification, description, and measurement parameters is necessary. The following is an explanation and key for this coding. Each section may be identified in the key by the section heading or the IBM card column number.

I. MISSILE IDENTIFICATION (Col. 1-3)

This section is used to indicate the vehicle upon which the measurement is made.

II. MEASUREMENT IDENTIFICATION (Col. 4-9)

A. Each measurement has a unique six-character identification. The first character defines the system within which the measurement exists. The second character defines the monitoring agency. The third, fourth, and fifth characters are number assignments which define a particular measurement within the system defined by the first character. The sixth character defines the type of measurement.

THIS MATERIAL CONTAINS INFORMATION AFFECTING THE NATIONAL DEFENSE OF THE UNITED STATES WITHIN THE MEANING OF THE ESPIONAGE LAWS, TITLE 18, U.S.C., SECTIONS 793 AND 794, THE TRANSMISSION OR REVELATION OF WHICH IN ANY MANNER TO AN UNAUTHORIZED PERSON IS PROHIBITED BY LAW.

~~CONFIDENTIAL~~

A P 7 001 P

- P — Type of Measurement (Col. 9)
- 001 — Number Assignment (Col. 6-8)
- 7 — Monitoring Agency (Col. 5)
- P — System (Col. 4)
- A — Vehicle (Col. 3)

SYMBOL	VEHICLE (Col. 3)	SYSTEM (Col. 4)	TYPE OF MEASUREMENT (Col. 9)
A	Atlas Booster	Airframe	Acceleration
B	*	Beacon	Rotation Rate
C	Centaur	*	Current
D	*	Range Safety Command	Deflection
E	*	Electrical	Power
F	*	Pressurization	Force
G	*	Guidance (Radio)	*
H	*	Hydraulic	Position
I	*	Guidance (Inertial)	Intensity
J	*	*	Humidity
L	WS 117L 2nd Stage	Launcher	Velocity
M	Mercury Capsule	Miscellaneous	Mass (Dimensionless coefficient)
N	*	Facilities and Site	Camera Coverage
O	*	*	Vibration
P	*	Propulsion	Pressure
Q	*	*	Frequency
R	*	*	Rate
S	*	Flight Control System	Strain
T	*	Telemetering	Temperature
U	*	Propellant Utilization	*

THIS MATERIAL CONTAINS INFORMATION AFFECTING THE NATIONAL DEFENSE OF THE UNITED STATES WITHIN THE MEANING OF THE ESPIONAGE LAWS, TITLE 18, U.S.C., SECTIONS 793 AND 794, THE TRANSMISSION OR REVELATION OF WHICH IN ANY MANNER TO AN UNAUTHORIZED PERSON IS PROHIBITED BY LAW.

CONFIDENTIAL

Vendor Code

WK	Wiancko Engineering Co.	BLH	Baldwin-Lima Hamilton
MASSA	Massa Laboratories, Inc.	T	Thermo Electric Co., Inc.
R-D	Rocketdyne	WAUGH	Waugh Engineering Co.

☐ Indicates the transducer is the same one as that used for the measurement number immediately following this symbol.

VII. TRANSDUCER SERIAL NUMBER (Col. 62-66)

VIII. TRANSDUCER LOCATION (Col. 67-70)

Station Number (Col. 67-70)

Location by station number to the nearest inch.

Quadrant Number (Col. 71)

1	Quadrant I
2	Quadrant II
3	Quadrant III
4	Quadrant IV
X	XX Axis
Y	YY Axis

FOR LANDLINE AND CAPTIVE TEST

IX. TYPE OF RECORDER (Col. 30-34)

A	AM tape
D	Sanborn type recorder
E	Eput meter, counter
F	FM tape

THIS MATERIAL CONTAINS INFORMATION AFFECTING THE NATIONAL DEFENSE OF THE UNITED STATES WITHIN THE MEANING OF THE ESPIONAGE LAWS, TITLE 18, U.S.C., SECTIONS 793 AND 794, THE TRANSMISSION OR REVELATION OF WHICH IN ANY MANNER TO AN UNAUTHORIZED PERSON IS PROHIBITED BY LAW.

~~CONFIDENTIAL~~

G	Esterline-Angus-Type-AW Graphic Recorder
L	Panel Light
M	Meter
MS	Multi-Point Strip Chart
O	Oscillograph (CEC)
P	Printer
R	EA Sequence Recorder
S	Strip Chart (Brown, Speedomax)

FOR TELEMETERING ONLY

X. MEASUREMENT CHANNEL ASSIGNMENTS (Col. 30-34, on TLM only)

Telemeter transmitter number (Col. 30)

Subcarrier channel numbers (Col. 31-32)

1-13, A, C, E

Pin Number (Col. 33-34)

Pin number if commutated in telemeter package

Pin number 1 thru 60

TYPE OF MEASUREMENT (Col. 76, on TLM only)

P Primary - An original measurement with one transducer, the output of which is sent to only one telemetering package.

M Multiple - When a measurement is picked up by one transducer but sent over two or more telemetering packages the original measurement is considered primary and the repeated ones considered multiple.

THIS MATERIAL CONTAINS INFORMATION AFFECTING THE NATIONAL DEFENSE OF THE UNITED STATES WITHIN THE MEANING OF THE ESPIONAGE LAWS, TITLE 18, U.S.C., SECTIONS 793 AND 794, THE TRANSMISSION OR REVELATION OF WHICH IN ANY MANNER TO AN UNAUTHORIZED PERSON IS PROHIBITED BY LAW.

~~CONFIDENTIAL~~

SPECIAL CODING (Col. 76, on TLM only)

C Installation Drawing/Wiring Diagram
(Signal available will be shown in tabulation Section 15)
(Output impedance will be shown in tabulation Section 16)

THIS MATERIAL CONTAINS INFORMATION AFFECTING THE NATIONAL DEFENSE OF THE UNITED STATES WITHIN THE MEANING OF THE ESPIONAGE LAWS, TITLE 18, U.S.C., SECTIONS 793 AND 794, THE TRANSMISSION OR REVELATION OF WHICH IN ANY MANNER TO AN UNAUTHORIZED PERSON IS PROHIBITED BY LAW.

~~CONFIDENTIAL~~

A

A/B	AIRBORNE
A/P	AUTOPILOT
AC	ALTERNATING CURRENT
ACA	ACOUSTICA
ACCELN	ACCELERATION
ACCRY	ACCESSORY
ACC	ACCELEROMETER
ACT, ACTR	ACTUATOR
ACUM	ACCUMULATOR
ADAPT	ADAPTER
AGC	AUTOMATIC GAIN CONTROL
AIG	ALL INERTIAL GUIDANCE
AMB	AMBIENT
AMP, AMPL	AMPLIFIER
ANG	ANGLE
ANT	ANTENNA
APS	ACCESSORY POWER SUPPLY
ASSY	ASSEMBLY
ATT	ATTITUDE
AUD	AUDIO
AUX	AUXILIARY
AVG	AVERAGE
AX	AXIS
AZ	AZIMUTH

B

B1	BOOSTER #1
B2	BOOSTER #2
B-O	BOIL OFF
B & S	BOOSTER & SUSTAINER
BAT	BATTERY
BCN	BEACON
BECO	BOOSTER ENGINE CUTOFF
BGG	BOOSTER GAS GENERATOR
BHD	BULKHEAD
BK	BREAK
BKHS	BLOCKHOUSE
BLWS	BELLOWS
BP	BOOST PUMP
BRG	BEARING
BRKT	BRACKET
BSD	BESIDE
BSTR	BOOSTER
BTL	BOTTLE
BTWN	BETWEEN
BYP	BYPASS

C

C-O, C/O	CUT OFF
CALC	CALCULATED
CAL, CALIB	CALIBRATE
CAN	CANISTER
CENT	CENTAUR
CHAN	CHANNEL
CHM	CHAMBER
CKT	CIRCUIT
CLSD	CLOSED
CLSG	CLOSING
CMD	COMMAND
COEF	COEFFICIENT
COF	CUTOFF
COMB	COMBUSTION
COMPT	COMPARTMENT
COND	CONDITIONER
CONT	CONTINUOUS
CONV	CONVERTER

THIS MATERIAL CONTAINS INFORMATION AFFECTING THE NATIONAL DEFENSE OF THE UNITED STATES WITHIN THE MEANING OF THE ESPIONAGE LAWS, TITLE 18, U.S.C., SECTIONS 793 AND 794, THE TRANSMISSION OR REVELATION OF WHICH IN ANY MANNER TO AN UNAUTHORIZED PERSON IS PROHIBITED BY LAW.

~~CONFIDENTIAL~~

C

COR	CORNER
CTL	CONTROL
CTR	CENTER
CY	CYCLE
CYL	CYLINDER

D

DBLR	DOUBLER
DC	DIRECT CURRENT
DCDR	DECODER
DEL	DELIVERY
DEMOD	DEMODULATOR
DESTR	DESTRUCTOR
DET	DETECTOR
DG	DISPLACEMENT GYRO
DI	DISCRETE INTEGRATOR
DIA	DIAMETRIC
DIFRN	DIFFERENCE
DIR	DIRECT
DIS	DISCRETE
DISCH	DISCHARGE
DISCON	DISCONNECT
DISPL	DISPLACEMENT
DLY	DELAY
DN	DOWN
DO	DROP OUT
DP	PRESSURE DROP
DRVR	DRIVER
DS	DOWN STREAM
DT	TEMPERATURE DROP
DV	DELTA VELOCITY

E

EMER	EMERGENCY
ENG	ENGINE
EXHST	EXHAUST
EXPLO	EXPLOSIVE
EXT	EXTERNAL

F

F & C	FILL & CHECK
F & D	FILL & DRAIN
FAIL	FAILURE
FAIR	FAIRING
FB	FEEDBACK
FRG	FAIRING
FL	FLAME
FL/RT	FLOW RATE
FREQ	FREQUENCY
FV	FUEL VALVE
FWD	FORWARD

G

GEN	GENERATOR
GG	GAS GENERATOR
GMBL	GIMBAL
GPM	GALLONS PER MINUTE
GND	GROUND
GN_2	GASEOUS NITROGEN
GO_2	GASEOUS OXYGEN
GU	GROUND UNIT
GUID	GUIDANCE

THIS MATERIAL CONTAINS INFORMATION AFFECTING THE NATIONAL DEFENSE OF THE UNITED STATES WITHIN THE MEANING OF THE ESPIONAGE LAWS, TITLE 18, U.S.C., SECTIONS 793 AND 794, THE TRANSMISSION OR REVELATION OF WHICH IN ANY MANNER TO AN UNAUTHORIZED PERSON IS PROHIBITED BY LAW.

~~CONFIDENTIAL~~

H

H/D	HOLDDOWN
HE	HELIUM
HI	HIGH
HLDR	HOLDER
HORZ	HORIZONTAL
HS	HEAD SUPPRESSION
HSV	HEAD SUPPRESSION VALVE
HSU	HYDRAULIC SUPPLY UNIT
HTR	HEATER
HYD	HYDRAULIC

I

IF	INTERMEDIATE FREQUENCY
IGN	IGNITOR OR IGNITION
IND	INDICATOR
INFO	INFORMATION
INJ	INJECTOR OR INJECTION
INL	INLET
INNR	INNER
INP	INPUT
INS	INSULATOR
INST, INSTR	INSTRUMENTATION
INSUL	INSULATION
INT	INTERNAL
INTGRD	INTEGRATED
INVTR	INVERTER

J

JET	JETTISON
JUNCT	JUNCTION

L

LAT	LATERAL
LCHR	LAUNCHER
LH_2	LIQUID HYDROGEN
LIM	LIMITER
LIT	LIGHT
LIQ	LIQUID
LKN	LOCKIN
LKUP	LOCKUP
LLFM	LANDLINE FM
LN	LINE
LO	LOW
LN_2	LIQUID NITROGEN
LONG	LONGITUDINAL
LO_2	LIQUID OXYGEN
LT	LIGHT
LUB	LUBRICATE
LVL	LEVEL

M

MAN	MANUAL
MAN, MANF	MANIFOLD
MANO	MANOMETER
MC	MEGACYCLES
MGTRN	MAGNETRON
MID	MIDDLE
MK	MARK
MOT	MOTOR
MSG	MESSAGE
MSL	MISSILE
MTR	MOTOR
MULT	MULTIPLIER

THIS MATERIAL CONTAINS INFORMATION AFFECTING THE NATIONAL DEFENSE OF THE UNITED STATES WITHIN THE MEANING OF THE ESPIONAGE LAWS, TITLE 18, U.S.C., SECTIONS 793 AND 794, THE TRANSMISSION OR REVELATION OF WHICH IN ANY MANNER TO AN UNAUTHORIZED PERSON IS PROHIBITED BY LAW

~~CONFIDENTIAL~~

N

NAA	NORTH AMERICAN AVIATION
NORM	NORMAL
NOZ	NOZZLE
NR	NEAR

O

OB	OVERBOARD
OP	OPTICAL PROBE, OUTPUT
OPN	OPEN
OPT	OUTPUT
ORFC	ORIFICE
OSC	OSCILLATOR
OTB	OUTBOARD
OUT	OUTLET
OUTBR, OTB	OUTBOARD
OUTR	OUTER
OVBD	OVERBOARD
OVRSPEED	OVERSPEED

P

P, PCH	PITCH
PB	PULSE BEACON
PB-IP	PULSE BEACON-IMPACT PREDICTOR
PG	PROGRAMMER
PH	PHASE
PKG	PACKAGE
PL	PLATE
PLAT	PLATFORM
PMP	PUMP
PNEU	PNEUMATIC
PNL	PANEL
POS	POSITION OR POSITIONER
PPS	PULSES PER SECOND
PRE-RLS	PRERELEASE
PRESD	PRESSURIZED
PRESG	PRESSURIZING
PRESN	PRESSURIZATION
PRESS	PRESSURE
PREVLV	PREVALVE
PRF	PULSE REPETITION RATE
PRG	PURGE
PRGR	PROGRAMMER
PROP	PROPELLANT
PROP VLVS	PROPELLANT VALVES
PPS	POUNDS PER SECOND
PS	POWER SUPPLY
PU	PROPELLANT UTILIZATION
PUV, PU VLV	PROPELLANT UTILIZATION VALVE
PV	PROPELLANT VALVE
PWR	POWER
PWR SUP	POWER SUPPLY

Q

QUAD	QUADRANT
QLTY	QUALITY

R

R	ROLL
RADL	RADIAL

THIS MATERIAL CONTAINS INFORMATION AFFECTING THE NATIONAL DEFENSE OF THE UNITED STATES WITHIN THE MEANING OF THE ESPIONAGE LAWS, TITLE 18, U.S.C., SECTIONS 793 AND 794. THE TRANSMISSION OR REVELATION OF WHICH IN ANY MANNER TO AN UNAUTHORIZED PERSON IS PROHIBITED BY LAW.

~~CONFIDENTIAL~~

R

RB	RATE BEACON
RB-IP	RATE BEACON-IMPACT PREDICTOR
RCC	ROUGH COMBUSTION CUT-OFF
RCVR	RECEIVER
RD	ROCKETDYNE
RDY	READY
REF	REFERENCE
REG	REGULATOR
REL	RELEASE
RESP	RESPONSE
RESVR	RESERVOIR
RETR	RETRACT
RF	RADIO FREQUENCY
RG	RATE GYRO
RLF	RELIEF
RLY	RELAY
RNG	RANGE
ROL	ROLL
RSB	RANGE SAFETY BEACON
RSC	RANGE SAFETY COMMAND
RTN	RETURN
RV	RE-ENTRY VEHICLE (NOSECONE)

S

S1	SYCAMORE TEST STAND S1
S4	SYCAMORE TEST STAND S4
S/C	SUBCARRIER
SAF	SAFETY
SATS	SATISFACTORY
SECO	SUSTAINER ENGINE CUTOFF
SECT	SECTION
SEP	SEPARATION
SEQ	SEQUENCE
SGG	SUSTAINER GAS GENERATOR
SIG	SIGNAL
SNSR	SENSOR
SOL	SOLENOID
SPRT	SUPPORT
SRV AMPL	SERVO AMPLIFIER
SRV VLV	SERVOVALVE
SS	SUBSYSTEM
ST	START
STA	STATION
STABR	STABILIZER
STAT	STATIC
STOR	STORAGE
STRN	STRENGTH
STRT	START
STRUC	STRUCTURE
SUNTRKR	SUNTRACKER
SUP	SUPPLY
SUPHT	SUPERHEAT
SUPRN	SUPPRESSION
SURF	SURFACE
SUS, S	SUSTAINER
SW	SWITCH
SYS	SYSTEM

THIS MATERIAL CONTAINS INFORMATION AFFECTING THE NATIONAL DEFENSE OF THE UNITED STATES WITHIN THE MEANING OF THE ESPIONAGE LAWS, TITLE 18, U.S.C. SECTIONS 793 AND 794, THE TRANSMISSION OR REVELATION OF WHICH IN ANY MANNER TO AN UNAUTHORIZED PERSON IS PROHIBITED BY LAW.

~~CONFIDENTIAL~~

T

T/B	TURBOPUMP
T/C	THERMOCOUPLE
TACH	TACHOMETER
TANG	TANGENTIAL
TBN	TURBINE
TCC	TEST CONDUCTOR'S CONSOLE
TEMP	TEMPERATURE
TH, THR	THRUST
TK	TANK
TLM	TELEMETER
TLR	TRAILER
TMR	TIMER
TOR	TORQUE
TOT	TOTAL
TRGT	TARGET
TRIG	TRIGGER
TURB	TURBINE

U

UMBL	UMBILICAL
UP	UPPER

V

V1	VERNIER ENGINE #1
V2	VERNIER ENGINE #2
VAP	VAPOR
VDC	VOLTS DIRECT CURRENT
VECO	VERNIER ENGINE CUTOFF

V

VECT	VECTOR
VEL	VELOCITY
VERT	VERTICAL
VIBN	VIBRATION
VLV	VALVE
VRN	VERNIER
VTRI	VENTURI

W

WT	WEIGHT

X

X	TRANS
XCIT	EXCITATION
XCNGR	EXCHANGER
XDCR	TRANSDUCER
XFER SYS	TRANSFER SYSTEM
XFER UN	TRANSFER UNIT
XMTR	TRANSMITTER
XPL	EXPLOSIVE
XPNDR, XPONDER	TRANSPONDER
XTAL	CRYSTAL
XVERS	TRANSVERSE

Y

Y-R, Y/R	YAW ROLL

Z

THIS MATERIAL CONTAINS INFORMATION AFFECTING THE NATIONAL DEFENSE OF THE UNITED STATES WITHIN THE MEANING OF THE ESPIONAGE LAWS, TITLE 18, U.S.C., SECTIONS 793 AND 794, THE TRANSMISSION OR REVELATION OF WHICH IN ANY MANNER TO AN UNAUTHORIZED PERSON IS PROHIBITED BY LAW.

~~CONFIDENTIAL~~

This page intentionally left blank.

THIS MATERIAL CONTAINS INFORMATION AFFECTING THE NATIONAL DEFENSE OF THE UNITED STATES WITHIN THE MEANING OF THE ESPIONAGE LAWS, TITLE 18, U.S.C., SECTIONS 793 AND 794, THE TRANSMISSION OR REVELATION OF WHICH IN ANY MANNER TO AN UNAUTHORIZED PERSON IS PROHIBITED BY LAW.

~~CONFIDENTIAL~~

EXTERNAL DISTRIBUTION

	No. Copies
AIR FORCE	16
GE (MSVD)	1
ARMA GARDEN CITY, NY	2
ARMA, SAN DIEGO	2
MAJOR FRANK A SILVASY	1
ROCKETDYNE	1
ACOUSTICA ASSOCIATES	1
KELLOG SWITCHBOARD & SUPPLY	1

THIS MATERIAL CONTAINS INFORMATION AFFECTING THE NATIONAL DEFENSE OF THE UNITED STATES WITHIN THE MEANING OF THE ESPIONAGE LAWS, TITLE 18, U.S.C., SECTIONS 793 AND 794, THE TRANSMISSION OR REVELATION OF WHICH IN ANY MANNER TO AN UNAUTHORIZED PERSON IS PROHIBITED BY LAW.

~~CONFIDENTIAL~~

APPENDIX

OSTF

IBM CODE KEY

APPENDIX A

INSTRUMENTATION CONFIGURATION

IBM CODE KEY

Master tabulations of all performance measurements applicable to all test articles are maintained by the Test Planning Group. Operational tabulations are compiled from these masters for individual missiles. All instrumentation logs are maintained on IBM punched cards. This facilitates rapid sorting, rearrangement, and tabulation of measurements as required for program preparation and data analysis. Such storage necessitates a systematic classification of the measurements and uniformity in method used to describe the many types of measurements. To achieve this, an extensive coding of the identification, description, and measurement parameters is necessary. The following is an explanation and key for this coding. Each section may be identified in the key by the section heading or the IBM card column number.

I. MISSILE IDENTIFICATION (Col. 1-3)

This section is used to indicate the vehicle upon which the measurement is made.

II. MEASUREMENT IDENTIFICATION (Col. 4-9)

A. Each measurement has a unique six-character identification. The first character defines the system within which the measurement exists. The second character defines the monitoring agency. The third, fourth, and fifth characters are number assignments which define a particular measurement within the system defined by the first character. The sixth character defines the type of measurement.

THIS MATERIAL CONTAINS INFORMATION AFFECTING THE NATIONAL DEFENSE OF THE UNITED STATES WITHIN THE MEANING OF THE ESPIONAGE LAWS, TITLE 18, U.S.C., SECTIONS 793 AND 794, THE TRANSMISSION OR REVELATION OF WHICH IN ANY MANNER TO AN UNAUTHORIZED PERSON IS PROHIBITED BY LAW

CONFIDENTIAL

~~CONFIDENTIAL~~

GENERAL DYNAMICS | ASTRONAUTICS

A P 1 001 P

- P — Type of Measurement (Col. 9)
- 001 — Number Assignment (Col. 6-8)
- 1 — Monitoring Agency (Col. 5)
- P — System (Col. 4)
- A — Vehicle (Col. 3)

SYMBOL	VEHICLE (Col. 3)	SYSTEM (Col. 4)	TYPE OF MEASUREMENT (Col. 9)
A	Atlas Booster	Airframe	Acceleration
B	*	Beacon	Rotation Rate
C	Centaur	*	Current
D	*	Range Safety Command	Deflection
E	*	Electrical	Power
F	*	Pressurization	Force
G	*	Guidance (Radio)	*
H	*	Hydraulic	Position
I	*	Guidance (Inertial)	Intensity
J	*	*	*
L	WS 117L 2nd Stage	Launcher	Velocity
M	Mercury Capsule	Miscellaneous	Mass (Dimensionless coefficient)
N	*	Facilities and Site	Camera Coverage
O	*	*	Vibration
P	*	Propulsion	Pressure
Q	*	*	Frequency
R	*	*	Rate
S	*	Flight Control System	Strain
T	*	Telemetering	Temperature
U	*	Propellant Utilization	*

THIS MATERIAL CONTAINS INFORMATION AFFECTING THE NATIONAL DEFENSE OF THE UNITED STATES WITHIN THE MEANING OF THE ESPIONAGE LAWS, TITLE 18, U.S.C., SECTIONS 793 AND 794, THE TRANSMISSION OR REVELATION OF WHICH IN ANY MANNER TO AN UNAUTHORIZED PERSON IS PROHIBITED BY LAW

~~CONFIDENTIAL~~

SYMBOL	VEHICLE (Col. 3)	SYSTEM (Col. 4)	TYPE OF MEASUREMENT (Col. 9)
V	*	*	Voltage
W	*	*	Time
X	*	External	Discrete Position
Y	*	Payload	Acoustical
Z	*	Azusa Transponder	Azimuth

* Note: Unassigned

MONITORING AGENCY (Col. 5)

0	Telemetering
1	Direct Line (Captive Test and AFMTC Landline)
V	Checkout and Validation Instrumentation
M	Visual Panel Presentations

III. MEASUREMENT RANGE (Col. 35-42)

This represents the desired capability of the measuring system. "M" preceding a number indicates minus quantity.

IV. UNITS OF FUNCTION (Col. 43-45)

AMP	Amperes	F/S	Feet per second
CPS	Cycles per second	FS^2	Feet per second^2
DB	Decibles	FTN	Foot ton
DBM	Decibles above 1 Milliwatts	G	Acceleration of Gravity
DEG	Degrees Angular	GPM	Gallons per minute
DGC	Degrees Centigrade	GPS	Gallons per second
DGF	Degrees Fahrenheit	IN	Inches
DGR	Degrees Rankine	INW	Inches of water
D/S	Degrees per second	ILB	Inch pound
E	Watts	IPI	Inches per inch

THIS MATERIAL CONTAINS INFORMATION AFFECTING THE NATIONAL DEFENSE OF THE UNITED STATES WITHIN THE MEANING OF THE ESPIONAGE LAWS, TITLE 18, U.S.C., SECTIONS 793 AND 794, THE TRANSMISSION OR REVELATION OF WHICH IN ANY MANNER TO AN UNAUTHORIZED PERSON IS PROHIBITED BY LAW

~~CONFIDENTIAL~~

~~CONFIDENTIAL~~

KC	Kilocycles	PIG	Pounds per square inch gage
KID	Thousands of pound per square in. differential	PPS	Pulses per second
		PS	Pounds per second
KPS	Kilo-pounds	PSI	Pounds per square inch
KPM	Thousands of RPM's	RPM	Revolutions per minute
LBS	Pounds	RS^2	Radians per second^2
MA	Milliamperes	SF^2	Slugs feet^2
MC	Megacycles	SLG	Slugs
ME	Milliwatts	SPS	Samples per second
MII	Microinches per inch	UV	Microvolts
MS	Milliseconds	UA	Microamperes
MV	Millivolts	VAC	Volts, alternating current
PIA	Pounds per square inch absolute	VDC	Volts, direct current
PID	Pounds per square inch differential	VPK	Peak volts, AC
		PRV	Phase reversing AC voltage

V. FREQUENCY RESPONSE REQUIRED (Col. 49-51)

The required response of the measuring system in cycles per second unless otherwise noted or implied.

SLO	Less than 1 cycle per second
400	400 cycles per second
1KC	1 Kilocycle (1000 cycles) per second
2MC	2 Megacycles (2,000,000 cycles) per second
STP	Step Function
UNK	Unknown

VI. TYPE OF TRANSDUCER (Col. 52-61)

*Indicates an "off the shelf" commercial transducer. This is followed by a coded identification of the vendor and the vendor model number if known.

THIS MATERIAL CONTAINS INFORMATION AFFECTING THE NATIONAL DEFENSE OF THE UNITED STATES WITHIN THE MEANING OF THE ESPIONAGE LAWS, TITLE 18, U.S.C., SECTIONS 793 AND 794, THE TRANSMISSION OR REVELATION OF WHICH IN ANY MANNER TO AN UNAUTHORIZED PERSON IS PROHIBITED BY LAW

~~CONFIDENTIAL~~

Vendor Code

WK	Wianco Engineering Co.	BLH	Baldwin-Lima Hamilton
MASSA	Massa Laboratories, Inc.	T	Thermo Electric Co., Inc.
R-D	Rocketdyne	WAUGH	Waugh Engineering Co.

[ ] Indicates the transducer is the same one as that used for the measurement number immediately following this symbol.

VII. TRANSDUCER SERIAL NUMBER (Col. 62-66)

VIII. TRANSDUCER LOCATION (Col. 67-70)

Station Number (Col. 67-70)

Location by station number to the nearest inch.

Quadrant Number (Col. 71)

1	Quadrant I
2	Quadrant II
3	Quadrant III
4	Quadrant IV
X	XX Axis
Y	YY Axis

FOR LANDLINE AND CAPTIVE TEST

IX. TYPE OF RECORDER (Col. 30-34)

A	AM tape
D	Sanborn type recorder
E	Eput meter, counter
F	FM tape
G	Esterline-Angus-Type-AW Graphic Recorder
L	Panel Light

THIS MATERIAL CONTAINS INFORMATION AFFECTING THE NATIONAL DEFENSE OF THE UNITED STATES WITHIN THE MEANING OF THE ESPIONAGE LAWS, TITLE 18, U.S.C., SECTIONS 793 AND 794, THE TRANSMISSION OR REVELATION OF WHICH IN ANY MANNER TO AN UNAUTHORIZED PERSON IS PROHIBITED BY LAW

CONFIDENTIAL

M	Meter
MS	Multi-Point Strip Chart
O	Oscillograph (CEC)
P	Printer
R	EA Sequence Recorder
S	Strip chart (Brown, Speedomax)

FOR TELEMETERING ONLY

X. MEASUREMENT CHANNEL ASSIGNMENTS (Col. 30-34, on TLM only)

Telemeter transmitter number (Col. 30)

Subcarrier channel numbers (Col. 31-32)

1-13, A, C, E

Pin number (Col. 33-34)

Pin number if commutated in telemeter package

Pin number 1 thru 60

TYPE OF MEASUREMENT (Col. 76, on TLM only)

P Primary - An original measurement with one transducer, the output of which is sent to only one telemetering package.

M Multiple - When a measurement is picked up by one transducer but sent over two or more telemetering packages the original measurement is considered primary and the repeated ones considered multiple.

SPECIAL CODING (Col. 76, on TLM only)

C Installation Drawing/Wiring Diagram
(Signal available will be shown in tabulation Section 15)
(Output impedance will be shown in tabulation Section 16)

THIS MATERIAL CONTAINS INFORMATION AFFECTING THE NATIONAL DEFENSE OF THE UNITED STATES WITHIN THE MEANING OF THE ESPIONAGE LAWS, TITLE 18, U.S.C., SECTIONS 793 AND 794, THE TRANSMISSION OR REVELATION OF WHICH IN ANY MANNER TO AN UNAUTHORIZED PERSON IS PROHIBITED BY LAW

~~CONFIDENTIAL~~

XI. INSTRUMENTATION TEST PLAN

A. Measurement Functions (Col. 31-34)

Functions are assigned two or four digit codes and are classified as (1) operational requirements, (2) Post Test Failure Detection Requirements or (3) Test Objectives.

1. Operating Requirements

Operating measurements are those required on a continuing basis for checkout of the missile during the countdown and for safe operation during start, running, and shutdown of a hot firing. These measurements must be presented on a visual display, all others have no such requirements. Operating measurements are indicated by the two digit code (01).

2. Post Test Failure Detection Requirements

This measurement function includes those measurements which will provide "quick look" type of post test data necessary to detect a possible malfunction. Analysis of this data should indicate an unsafe firing condition. These measurements are indicated by the two digit code (02).

3. Test Objectives

a. Coding System: The coding system for test objectives has been developed to provide a rapid means of identification and handling of a large number of objectives. Coded objectives are listed by system along with the instrumentation required for accomplishment.

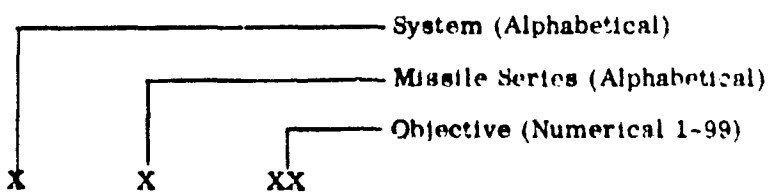

THIS MATERIAL CONTAINS INFORMATION AFFECTING THE NATIONAL DEFENSE OF THE UNITED STATES WITHIN THE MEANING OF THE ESPIONAGE LAWS, TITLE 18, U.S.C., SECTIONS 793 AND 794, THE TRANSMISSION OR REVELATION OF WHICH IN ANY MANNER TO AN UNAUTHORIZED PERSON IS PROHIBITED BY LAW

~~CONFIDENTIAL~~

b. Letters used to identify the system are identical to those used to identify the system described in Section II of the code key with the following addition:

o - over-all general objectives
i.e. Reliability, Compatibility
w - propellant loading

c. Objectives Headers

(1) The instrumentation test plan presents a tabulation of measurements by test objectives.

(2) Each objective normally contains one of the following five key terms. These terms defined below will establish a standard datum for uniform interpretation of test objectives.

DEMONSTRATE (DEM) denotes the occurrence of an action or an event during a test. The accomplishment of this type objective requires a qualitative answer. The answer will be derived through the relation of this action or event to some other known information or occurrence. This category of objective implies a minimum of airborne instrumentation, and/or that the information be obtained external to the missile.

DETERMINE (DET) denotes the measuring of performance of any unit or system. This category implies the quantitative investigation of over-all operation which includes, generally, the instrumentation for measuring basic inputs and outputs of the unit or system. The information obtained should indicate to what extent the system is operating as designed. The instrumentation should allow performance deficiencies to be isolated to either the system or to the system inputs.

EVALUATE (EVAL) denotes the measuring of performance of any unit or system as well as the performance and/or inter-action of its sections or subsystems that are under investigation.

THIS MATERIAL CONTAINS INFORMATION AFFECTING THE NATIONAL DEFENSE OF THE UNITED STATES WITHIN THE MEANING OF THE ESPIONAGE LAWS, TITLE 18, U.S.C., SECTIONS 793 AND 794, THE TRANSMISSION OR REVELATION OF WHICH IN ANY MANNER TO AN UNAUTHORIZED PERSON IS PROHIBITED BY LAW.

~~CONFIDENTIAL~~

The accomplishment of objectives of this type requires quantitative data on the performance of both unit or system and its sections or subsystems. Instrumentation for this category generally includes measuring basic inputs and outputs of the unit or system as well as basic inputs and outputs of its sections or subsystems. The performance levels of the sections or subsystems will then be analyzed for their contribution toward performance of the unit or system. This category will provide the most detailed information of any of these categories.

OBTAIN DATA (OBTN) denotes gathering engineering information which is to be measured to augment the general knowledge required in the development of the over-all weapon system. This category may also be used for supplemental investigations such as environmental studies, ascertaining k factors, ground equipment studies, etc. The degree of instrumentation is not implied by this definition; individual objectives will indicate extent of instrumentation required.

ESTABLISH (ESTB) denotes gathering engineering information for the development of ground procedures and operating techniques. Objectives in this category are not necessarily dependent on analytic studies.

B. Test Block Numbers (Captive only)

Two columns of information are given under each run. These columns indicate which parameters are to be recorded on each test run. The first column gives the measurement priority. The second is used only for priority 1 measurements and gives the measurement category.

C. Priority Symbols (Captive only)

1. These measurements are necessary to ensure safe operation or satisfactory fulfillment of the test objectives. This includes functional readiness indications, the so-called "red line" indications. The test would be authorized to either "hold" or "abort" as applicable for any one of these measurements.

THIS MATERIAL CONTAINS INFORMATION AFFECTING THE NATIONAL DEFENSE OF THE UNITED STATES WITHIN THE MEANING OF THE ESPIONAGE LAWS TITLE 18, U.S.C., SECTIONS 793 AND 794, THE TRANSMISSION OR REVELATION OF WHICH IN ANY MANNER TO AN UNAUTHORIZED PERSON IS PROHIBITED BY LAW.

~~CONFIDENTIAL~~

2. These are measurements secondary to any particular test objective. They will contribute additional information toward fulfillment of the test objective but the test would be authorized to "hold" only if the number and nature of the incomplete instrumentation in this category appeared detrimental to accomplishment of the test objective.

3. These are measurements of general information nature. They may supplement the priority 1 and 2 measurements, or they may be of environmental nature in and around the test stand. They will be taken only when manpower and schedules permit. No hold action will be authorized for any of these measurements.

Absence of a priority entry in the first column on any run indicates that the measurement will not be made on that run.

D. Measurement Categories (Captive only)

1A Operating Measurements - Those functions that have to be monitored before and/or during a test. Category "A" measurements will be identified as such irrespective of whether the function has most significance before or during a test.

IB Post-Test Inspection Measurements - Those functions that are to be reviewed after a test to determine that systems operated properly and that the test was conducted safely.

SYSTEM EVALUATION MEASUREMENTS

A number of measurements are required for basic systems evaluation. Some of these are already included in categories 1A and 1B as defined above. The rest consist of all other priority 1 measurements.

E. Missile Area (Col. 75-79)

This system of coding is used to group related measurements for easier analysis. Descriptive heading of this coding appear in all tabulations that are presented in this order.

THIS MATERIAL CONTAINS INFORMATION AFFECTING THE NATIONAL DEFENSE OF THE UNITED STATES WITHIN THE MEANING OF THE ESPIONAGE LAWS, TITLE 18, U.S.C., SECTIONS 793 AND 794, THE TRANSMISSION OR REVELATION OF WHICH IN ANY MANNER TO AN UNAUTHORIZED PERSON IS PROHIBITED BY LAW.

~~CONFIDENTIAL~~

A

A/B	AIRBORNE
A/P	AUTOPILOT
AC	ALTERNATING CURRENT
ACA	ACOUSTICA
ACCELN	ACCELERATION
ACCRY	ACCESSORY
ACLMTR, ACC	ACCELEROMETER
ACT, ACTR	ACTUATOR
ACUM	ACCUMULATOR
ADAPT	ADAPTER
AFCRC	AIR FORCE CAMBRIDGE RESEARCH CENTER
AGC	AUTOMATIC GAIN CONTROL
AIG	ALL INERTIAL GUIDANCE
ALTR	ALTERNATE
AMB	AMBIENT
AMP, AMPL	AMPLIFIER
ANG	ANGLE
ANT	ANTENNA
APS	ACCESSORY POWER SUPPLY
ASSY	ASSEMBLY
ATT	ATTITUDE
AUD	AUDIO
AUX	AUXILIARY
AVG	AVERAGE
AX	AXIS
AZ	AZIMUTH

B

B1	BOOSTER #1
B2	BOOSTER #2
B-O	BOIL OFF
B & S	BOOSTER & SUSTAINER

B

BAT	BATTERY
BCN	BEACON
BECO	BOOSTER ENGINE CUTOFF
BGG	BOOSTER GAS GENERATOR
BHD	BULKHEAD
BK	BREAK
BKHS	BLOCKHOUSE
BLWS	BELLOWS
BP	BOOST PUMP
BRG	BEARING
BRKT	BRACKET
BSD	BESIDE
BSTR	BOOSTER
BTG	BEACON TRIGGER GENERATOR
BTL	BOTTLE
BTWN	BETWEEN
BYP	BYPASS

C

C-O, C/O	CUT OFF
CALC	CALCULATED
CAL, CALIB	CALIBRATE
CAN	CANISTER
CATH	CATHODE
CATH FOL	CATHODE FOLLOWER
CENT, CENTR	CENTAUR
CH	CHILL
CHAN	CHANNEL
CHM, CHAMB	CHAMBER
CKT	CIRCUIT
CLSD	CLOSED
CLSG	CLOSING
CMD	COMMAND
CMPST	COMPOSITE

THIS MATERIAL CONTAINS INFORMATION AFFECTING THE NATIONAL DEFENSE OF THE UNITED STATES WITHIN THE MEANING OF THE ESPIONAGE LAWS, TITLE 18, U.S.C., SECTIONS 793 AND 794, THE TRANSMISSION OR REVELATION OF WHICH IN ANY MANNER TO AN UNAUTHORIZED PERSON IS PROHIBITED BY LAW

CONFIDENTIAL

CONFIDENTIAL

C

COEF	COEFFICIENT
COF	CUTOFF
COMB	COMBUSTION
COMPT	COMPARTMENT
COMUTR	COMPUTER
COND	CONDITIONER
CONT	CONTINUOUS
CONV	CONVERTER
COR	CORNER
CTL	CONTROL
CTR, CNTR	CENTER
CY	CYCLE
CYL	CYLINDER

D

DBLR	DOUBLER
DC	DIRECT CURRENT
DCDR	DECODER
DEFLN	DEFLECTION
DEFLR	DEFLECTOR
DEL	DELIVERY
DEMOD	DEMODULATOR
DESTR	DESTRUCTOR
DET	DETECTOR
DG	DISPLACEMENT GYRO
DI	DISCRETE INTEGRATOR
DIA	DIAMETRIC
DIFRN	DIFFERENCE
DIR	DIRECT
DIS	DISCRETE
DISCH	DISCHARGE
DISCON	DISCONNECT
DISPL	DISPLACEMENT
DLY	DELAY
DN	DOWN
DO	DROP OUT
DP	PRESSURE DROP
DRVR	DRIVER
DS	DOWN STREAM
DSHE	DOWN STREAM HEAT EXCHANGER
DT	TEMPERATURE DROP
DV	DELTA VELOCITY

E

EMER	EMERGENCY
ENG	ENGINE
ENGMT	ENGAGEMENT
ETP	ENGINE TEST PANEL
EVC-O	ELECTRONIC VIBRATION CONTROL
EXHST	EXHAUST
EXPLO	EXPLOSIVE
EXT	EXTERNAL

F

F & C	FILL & CHECK
F & D	FILL & DRAIN
FAIL	FAILURE
FAIR	FAIRING
FB	FEEDBACK
FRG	FAIRING
FL	FLAME
FLDN	FIELDEN
FL/RT	FLOW RATE
FLS	FLASHING LIGHT SYSTEM
FL/TOT	FLOW TOTALIZER
FLWR	FOLLOWER

THIS MATERIAL CONTAINS INFORMATION AFFECTING THE NATIONAL DEFENSE OF THE UNITED STATES WITHIN THE MEANING OF THE ESPIONAGE LAWS, TITLE 18, U.S.C., SECTIONS 793 AND 794, THE TRANSMISSION OR REVELATION OF WHICH IN ANY MANNER TO AN UNAUTHORIZED PERSON IS PROHIBITED BY LAW

CONFIDENTIAL

F

FREQ	FREQUENCY
FV	FUEL VALVE
FWD	FORWARD

G

GEN	GENERATOR
GG	GAS GENERATOR
GMBL	GIMBAL
GPM	GALLONS PER MINUTE
GND	GROUND
GN_2	GASEOUS NITROGEN
GO_2	GASEOUS OXYGEN
GU	GROUND UNIT
GUID	GUIDANCE

H

H/D	HOLDDOWN
HE	HELIUM
HI	HIGH
HLDR	HOLDER
HORZ	HORIZONTAL
HPD	HYDRAULIC PUMP DISCHARGE
HPP	HY PNEU PANEL
HS	HEAD SUPPRESSION
HSV	HEAD SUPPRESSION VALVE
HSU	HYDRAULIC SUPPLY UNIT
HT	HEAT
HTR	HEATER
HYD	HYDRAULIC

I

IF	INTERMEDIATE FREQUENCY
IGN	IGNITOR OR IGNITION
IND	INDICATOR
INFO	INFORMATION
INJ	INJECTOR OR INJECTION
INL	INLET
INNR	INNER
INP	INPUT
INS	INSULATOR
INST, INSTR	INSTRUMENTATION
INSUL	INSULATION
INT	INTERNAL
INTGRD	INTEGRATED
INTGRG	INTEGRATING
INVTR	INVERTER

J

JET	JETTISON
JUNCT	JUNCTION

L

LAT	LATERAL
LCHR	LAUNCHER
LH_2	LIQUID HYDROGEN
LIM	LIMITER
LIMR	LIMITER
LIT	LIGHT
LIQ	LIQUID
LKN	LOCKIN
LKUP	LOCKUP

THIS MATERIAL CONTAINS INFORMATION AFFECTING THE NATIONAL DEFENSE OF THE UNITED STATES WITHIN THE MEANING OF THE ESPIONAGE LAWS, TITLE 18, U.S.C., SECTIONS 793 AND 794, THE TRANSMISSION OR REVELATION OF WHICH IN ANY MANNER TO AN UNAUTHORIZED PERSON IS PROHIBITED BY LAW

CONFIDENTIAL

L

LLFM	LANDLINE FM
LN	LINE
LNG	LONG
LO	LOW
LN_2	LIQUID NITROGEN
LONG	LONGITUDINAL
LO_2	LIQUID OXYGEN
LT	LIGHT
LUB	LUBRICATE
LVL	LEVEL

M

MAN	MANUAL
MAN, MANF	MANIFOLD
MANO	MANOMETER
MC	MEGACYCLES
MGTRN	MAGNETRON
MID	MIDDLE
MK	MARK
MOT	MOTOR
MPCP	MISSILE POWER CONTROL PANEL
MSG	MESSAGE
MSL	MISSILE
MSW	MICROSWITCH
MT	MOUNT
MTL	METAL
MTR	MOTOR
MULT	MULTIPLIER

N

NAA	NORTH AMERICAN AVIATION
NORM	NORMAL
NOZ	NOZZLE
NPSH	NET POSITIVE SUCTION HEAD
NR	NEAR

O

OB	OVERBOARD
OP	OPTICAL PROBE, OUTPUT
OPN	OPEN
OPNG	OPENING
OPRNL	OPERATIONAL
OPT	OUTPUT
ORFC	ORIFICE
OSC	OSCILLATOR
OTB	OUTBOARD
OUT	OUTLET
OUTBR, OTB	OUTBOARD
OUTR	OUTER
OVBD	OVERBOARD
OVRSPEED	OVERSPEED

P

P, PCH	PITCH
PB	PULSE BEACON
PB-IP	PULSE BEACON-IMPACT PREDICTOR
PG	PROGRAMMER
PH	PHASE
PH REV	PHASE REVERSING
PKG	PACKAGE
PL	PLATE
PLAT	PLATFORM
PMP	PUMP
PNEU	PNEUMATIC

THIS MATERIAL CONTAINS INFORMATION AFFECTING THE NATIONAL DEFENSE OF THE UNITED STATES WITHIN THE MEANING OF THE ESPIONAGE LAWS, TITLE 18, U.S.C., SECTIONS 793 AND 794, THE TRANSMISSION OR REVELATION OF WHICH IN ANY MANNER TO AN UNAUTHORIZED PERSON IS PROHIBITED BY LAW

P

PNL	PANEL
POS	POSITION OR POSITIONER
PPS	PULSES PER SECOND
PR	PRESSURE
PREP	PREPARATION
PRE-RLS	PRERELEASE
PRESD	PRESSURIZED
PRESG	PRESSURIZING
PRESN	PRESSURIZATION
PRESS	PRESSURE
PREVLV	PREVALVE
PRF	PULSE REPETITION RATE
PRG	PURGE
PRGR	PROGRAMMER
PROP	PROPELLANT
PROP VLVS	PROPELLANT VALVES
PS	POUNDS PER SECOND
PS	POWER SUPPLY
PU	PROPELLANT UTILIZATION
PUV, PU VLV	PROPELLANT UTILIZATION VALVE
PV	PROPELLANT VALVE
PWR	POWER
PWR SUP	POWER SUPPLY

Q

QUAD	QUADRANT
QLTY	QUALITY

R

R	ROLL
RADL	RADIAL
RB	RATE BEACON
RB-IP	RATE BEACON-IMPACT PREDICTOR
RCC	ROUGH COMBUSTION CUT-OFF
RCVR	RECEIVER
RD	ROCKETDYNE
RDY	READY
RECLT	RECIRCULATE
REDNT	REDUNDANT
REF	REFERENCE
REG	REGULATOR
REGS	REGULATORS
REL	RELEASE
RESP	RESPONSE
RESVR	RESERVOIR
RETR	RETRACT
RF	RADIO FREQUENCY
RG	RATE GYRO
RLF	RELIEF
RLY	RELAY
RNG	RANGE
ROL	ROLL
RSB	RANGE SAFETY BEACON
RSC	RANGE SAFETY COMMAND
RTN	RETURN
RV	RE-ENTRY VEHICLE (NOSECONE)

S

S1	SYCAMORE TEST STAND S1
S4	SYCAMORE TEST STAND S4
S/C	SUBCARRIER

THIS MATERIAL CONTAINS INFORMATION AFFECTING THE NATIONAL DEFENSE OF THE UNITED STATES WITHIN THE MEANING OF THE ESPIONAGE LAWS, TITLE 18, U.S.C., SECTIONS 793 AND 794, THE TRANSMISSION OR REVELATION OF WHICH IN ANY MANNER TO AN UNAUTHORIZED PERSON IS PROHIBITED BY LAW

[redacted]

UNCLASSIFIED

S

S/T	START TANK
SAD	SADDLE
SAF	SAFETY
SATIS	SATISFACTORY
SDC	SECONDARY DISTRIBUTION CENTER
SECO	SUSTAINER ENGINE CUTOFF
SECT	SECTION
SELR	SELECTOR
SEPN	SEPARATION
SEQ	SEQUENCE
SGG	SUSTAINER GAS GENERATOR
SHLD	SHIELD
SIG	SIGNAL
SK	SKIN
SNERS	SENSORS
SNSR	SENSOR
SOL	SOLENOID
SPRT	SUPPORT
SRV AMPL	SERVO AMPLIFIER
SRV VLV	SERVOVALVE
SS	SUBSYSTEM
ST	START
STA	STATION
STABR	STABILIZER
STAT	STATIC
STOR	STORAGE
STRN	STRENGTH
STRT	START
STRUC	STRUCTURE
SUNTRKR	SUNTRACKER
SUP	SUPPLY
SUPHT	SUPERHEAT
SUPRN	SUPPRESSION

S

SURF	SURFACE
SUS, S	SUSTAINER
SW	SWITCH
SYS	SYSTEM

T

T/B	TURBOPUMP
T/C	THERMOCOUPLE
TACH	TACHOMETER
TANG	TANGENTIAL
TBN	TURBINE
TCC	TEST CONDUCTOR'S CONSOLE
TEMP	TEMPERATURE
TH, THR	THRUST
TK	TANK
TLM	TELEMETER
TLR	TRAILER
TMR	TIMER
TOR	TORQUE
TOT	TOTAL
TRGT	TARGET
TRIG	TRIGGER
TURB	TURBINE

U

UMBL	UMBILICAL
UP	UPPER
USHE	UPSTREAM HEAT EXCHANGER

V

V1	VERNIER ENGINE #1
V2	VERNIER ENGINE #2

THIS MATERIAL CONTAINS INFORMATION AFFECTING THE NATIONAL DEFENSE OF THE UNITED STATES WITHIN THE MEANING OF THE ESPIONAGE LAWS, TITLE 18, U.S.C., SECTIONS 793 AND 794, THE TRANSMISSION OR REVELATION OF WHICH IN ANY MANNER TO AN UNAUTHORIZED PERSON IS PROHIBITED BY LAW

[redacted]

V

VAP	VAPOR
VDC	VOLTS DIRECT CURRENT
VECO	VERNIER ENGINE CUTOFF
VECT	VECTOR
VEL	VELOCITY
VERT	VERTICAL
VIBN	VIBRATION
VLV	VALVE
VRN	VERNIER
VTRI	VENTURI

W

WT	WEIGHT

X

X	TRANS
XCIT	EXCITATION
XCNGR	EXCHANGER
XDCR	TRANSDUCER
XDCR SUP	TRANSDUCER SUPPLY
XFER SYS	TRANSFER SYSTEM
XFER UN	TRANSFER UNIT
XMTR	TRANSMITTER
XPL	EXPLOSIVE
XPNDR, XPONDER	TRANSPONDER
XTAL	CRYSTAL
XVERS	TRANSVERSE
XVTR	TRANSVERTER

Y

Y-R, Y/R	YAW ROLL

Z

THIS MATERIAL CONTAINS INFORMATION AFFECTING THE NATIONAL DEFENSE OF THE UNITED STATES WITHIN THE MEANING OF THE ESPIONAGE LAWS, TITLE 18, U.S.C., SECTIONS 793 AND 794 [redacted] WHICH IN ANY MANNER TO AN UNAUTHORIZED PERSON IS PROHIBITED BY LAW

[redacted]

UNCLASSIFIED

UNCLASSIFIED

This page intentionally left blank.

THIS MATERIAL CONTAINS INFORMATION AFFECTING THE NATIONAL DEFENSE OF THE UNITED STATES WITHIN THE MEANING OF THE ESPIONAGE LAWS, TITLE 18, U.S.C., SECTIONS 793 AND 794, THE TRANSMISSION OR REVELATION OF WHICH IN ANY MANNER TO AN UNAUTHORIZED PERSON IS PROHIBITED BY LAW
[redacted]

UNCLASSIFIED

UNCLASSIFIED

EXTERNAL DISTRIBUTION

	No. Copies
AIR FORCE	16
GE (MSVD)	1
ARMA GARDEN CITY, NY	2
ARMA, SAN DIEGO	2
MAJOR FRANK A SILVASY	1
ROCKETDYNE	1
ACOUSTICA ASSOCIATES	1
KELLOG SWITCHBOARD & SUPPLY	1

THIS MATERIAL CONTAINS INFORMATION AFFECTING THE NATIONAL DEFENSE OF THE UNITED STATES WITHIN THE MEANING OF THE ESPIONAGE LAWS, TITLE 18, U.S.C., SECTIONS 793 AND 794, THE TRANSMISSION OR REVELATION OF WHICH IN ANY MANNER TO AN UNAUTHORIZED PERSON IS PROHIBITED BY LAW.

[redacted]

UNCLASSIFIED

UNCLASSIFIED

UNCLASSIFIED

This page intentionally left blank.

UNCLASSIFIED

THIS MATERIAL CONTAINS INFORMATION AFFECTING THE NATIONAL DEFENSE OF THE UNITED STATES WITHIN THE MEANING OF THE ESPIONAGE LAWS, TITLE 18, U.S.C., SECTIONS 793 AND 794, THE TRANSMISSION OR REVELATION OF WHICH IN ANY MANNER TO AN UNAUTHORIZED PERSON IS PROHIBITED BY LAW.

[redacted]

UNCLASSIFIED

END

DATE

FILMED

6-5-69