UNCLASSIFIED

AD NUMBER

AD843179

NEW LIMITATION CHANGE

TO

Approved for public release, distribution unlimited

FROM

Distribution authorized to U.S. Gov't. agencies and their contractors; Administrative/Operational Use; 17 NOV 1960. Other requests shall be referred to Space and Missile Systems Organization, Los Angeles, CA.

AUTHORITY

SAMSO USAF ltr, 28 Feb 1972

THIS PAGE IS UNCLASSIFIED

AD843179

AD843179

REPORT NO. 27A634-R
DATE 11/17/60
NO. OF PAGES 28

CONVAIR ASTRONAUTICS

CONVAIR DIVISION OF GENERAL DYNAMICS CORPORATION

REPORT NO.27A634-R

ASTRONAUTICS

PRE-PRODUCTION TEST REPORT

FOR

SPGG HEATER CONTROL ASSEMBLY.

DWG. NO. 27-24700.

CONVAIR-ASTRONAUTICS
JAN 11 1961
LIBRARY

This document is subject to special export controls and each transmittal to foreign governments or foreign nationals may be made only with prior approval of:
Hq.SAMSO, LA., Ca. 90045
Attn: SMSD

PREPARED BY A.D. Barber, Test Engr.

CHECKED BY F.J. Denny, Lead Engineer

CHECKED BY A.R. Mollenkopf, Qualification Coord.

APPROVED BY R.G. Lamp, Jr., Test Lab Group Engineer

APPROVED BY R.S. Campbell, Chief of Test Labs

WITNESSED BY CVA Inspector 11/21/60

WITNESSED BY USAF Inspector 12-21-60

REVISIONS

NO.	DATE	BY	CHANGE	PAGES AFFECTED

Best
Available
Copy

TABLE OF CONTENTS

PARAGRAPH	TITLE	PAGE NO.
	SUMMARY	1
1.0	GENERAL INFORMATION	2
1.1	PURPOSE	2
1.2	ENVIRONMENTAL TESTS	2
1.3	NOMENCLATURE	2
1.4	TEST DATA	2
1.5	WITNESSING	2
1.6	SEQUENCE OF TESTS	2
1.7	VARIATIONS	2
2.0	DESCRIPTION AND REQUIREMENTS	3
2.1	DESCRIPTION OF TEST SPECIMEN	3
2.2	REFERENCES	3
2.3	OPERATING REQUIREMENTS AND TOLERANCES	3
2.3.1	EXTERNAL POWER SUPPLY	3
2.3.2	SPECIMEN OPERATION	3
3.0	TEST FACILITIES AND EQUIPMENT	5
3.1	INITIAL SATISFACTORY PERFORMANCE TEST EQUIPMENT	5
3.2	PROOF CYCLE TEST EQUIPMENT	5
3.3	ENVIRONMENTAL EQUIPMENT	5
3.3.1	TEMPERATURE-ALTITUDE-HUMIDITY TEST EQUIPMENT	5

TABLE OF CONTENTS (CONT'D)

PARAGRAPH	TITLE	PAGE NO.
3.3.2	VIBRATION TEST EQUIPMENT	5
3.3.3	ACCELERATION TEST EQUIPMENT	5
3.3.4	RAIN TEST EQUIPMENT	5
3.3.5	SALT SPRAY TEST EQUIPMENT	5
3.3.6	FUNGUS RESISTANCE TEST EQUIPMENT	5
3.3.7	SAND AND DUST EQUIPMENT	5
4.0	TEST PROCEDURES	6
4.1	TEST CONDITIONS	6
4.1.1	ATMOSPHERIC CONDITIONS	6
4.1.2	TOLERANCES	6
4.1.3	MEASUREMENTS	6
4.1.4	TEST SPECIMEN OPERATION	6
4.1.5	ADJUSTMENTS AND REPAIRS DURING TESTS	6
4.1.6	TEMPERATURE STABILIZATION	6
4.1.7	PRELIMINARY INSPECTION	7
4.1.8	INITIAL SATISFACTORY PERFORMANCE TEST	7
4.1.9	PROOF CYCLE TEST	7
4.2	TEMPERATURE-ALTITUDE-HUMIDITY TESTS	8
4.2.1	MISSILEBORNE EQUIPMENT	8
4.2.2	TEST GROUND SUPPORT EQUIPMENT	8

TABLE OF CONTENTS (CONT'D)

PARAGRAPH	TITLE	PAGE NO.
4.3	SALT ATMOSPHERE TEST	11
4.4	FUNGUS RESISTANCE TEST	11
4.5	RAIN TEST	12
4.6	SAND AND DUST TEST	13
4.7	EXPLOSION PROOF TEST	14
4.8	NON-OPERATING SHOCK AND VIBRATION TESTS	14
4.8.1	SHOCK TESTS	14
4.8.2	VIBRATION TESTS	15
4.9	OPERATING VIBRATION TESTS	16
4.10	OPERATING ACCELERATION TESTS	16
4.11	TEMPERATURE SHOCK TEST	17
4.12	SUNSHINE TEST	17
4.13	RADIO INTERFERENCE	18
4.14	LIFE TEST	18

FIGURES	TITLE	PAGE NO.
1	TEST SET UP	19
	DATA SHEETS	20 thru 28

SUMMARY

The following is the results obtained when the SPGG Heater Control Box Assembly, Dwg. No. 27-24700-1, S/N 21-G-10, underwent the tests as outlined in the accompanying procedure.

The specimen performed satisfactorily during the Initial Satisfactory Performance Test, the Temperature-Altitude-Humidity tests and the Sand and Dust test. However, the specimen failed to perform satisfactorily following the Salt Atmosphere test.

A B.O.I. was written and the specimen was opened. Investigation of the specimen showed that the salty atmosphere had penetrated through and had corroded and shorted across many electrical contacts. The test was therefore stopped.

An Inspectors Report was written on the specimen and it was sent to the Material Review Board for disposition. The specimen did not pass Pre-Production Testing.

1.0 GENERAL INFORMATION:

1.1 PURPOSE - The purpose of this report is to describe the test equipment and procedure required for the Pre-Production of components in accordance with the latest issue of Convair Specification No. 7-00209.

1.2 ENVIRONMENTAL TESTS - The environmental tests prescribed in this procedure are written to conform to the individual component specification and the current issue of Convair Specification No. 7-00209. In the event of conflict between specifications the component specification shall take precedence.

1.3 NOMENCLATURE - The specific component under test shall be referred to as, "Test Specimen" in this procedure.

1.4 TEST DATA - One copy of this report shall be bound into a data book and all original data and operating time, in minutes, and/or cycles recorded therein. The data book shall be kept on file in the Components Test Laboratory.

1.5 WITNESSING - Data from all tests outlined in this procedure shall be witnessed and signed by an Air Force Representative or his designated alternate.

1.6 SEQUENCE OF TESTS - The Initial Satisfactory Performance Test shall be performed on the "Test Specimen" prior to all other tests. The sequence of subsequent tests shall be determined by the availability of environmental facilities.

1.7 VARIATIONS - Variations to Convair Specification No. 7-00209 and/or the individual component specification shall be issued in the form of a memorandum to the applicable portions of this procedure.

Deviations to the above specification shall be processed by the Design Engineering Group based on the variations, if any, outlined in this procedure.

2.0 DESCRIPTION AND REQUIREMENTS:

2.1 DESCRIPTION OF TEST SPECIMEN - The test specimen covered by this procedure consists of a solid propellant gas generator heater control assembly, CVA No. 27-24700.

2.2 REFERENCES - Applicable portions of the following publications shall form part of this procedure:

a. Convair Spec. No. 7-00209B, "Environmental Design Conditions and Environmental Test Procedures for WS-107A-1 Equipments".

b. Convair Dwg. No. 27-24700, "Control Box, Assembly-Heater, Solid Propellant Gas Generator".

c. Convair Dwg. No. 27-24719, "Schematic-Diagram, SPGG Heater Control".

d. Convair Dwg. No. 27-24720, "Circuit-Diagram, SPGG Heater Control".

e. Convair Dwg. No. 27-24721, "Diagram-Wiring, Panel, SPGG Heater Control".

f. Convair Dwg. No. 27-24722, "Cable-Assembly, Heater SPGG".

2.3 OPERATING REQUIREMENTS AND TOLERANCES -

2.3.1 EXTERNAL POWER SUPPLY - The test specimen shall operate satisfactorily when supplied with 115VAC ±3%, 60 cps, single phase power.

2.3.2 SPECIMEN OPERATION - The test specimen shall operate as follows:

a. XI3 (power on light) shall glow, when pressed, if power is applied to J1.

b. All lights shall glow, when pressed, with power applied to J1 and with switch S1 closed.

2.0 DESCRIPTION AND REQUIREMENTS: (CONT'D)

2.3.2 SPECIMEN OPERATION - (CONT'D)

c. With power applied to J1 and all switches closed, XI1 (heater normal light) shall glow.

d With power applied to J1 and with switches S1, S3 and S4 closed, XI2 (heater failure light) shall glow and there shall be no voltage across K3-A3 and ground.

e. A 115VAC signal shall appear across K1-A3 to ground when S3 is opened.

3.0 TEST FACILITIES AND EQUIPMENT:

3.1 INITIAL SATISFACTORY PERFORMANCE TEST EQUIPMENT -

a. Multimeter, Triplett, Model 630-A, Accuracy ± 3%.

b. Special Heater Simulator as shown in CVA No. 27-24700.

3.2 PROOF CYCLE TEST EQUIPMENT - The same as the equipment used for the Initial Satisfactory Performance Test.

3.3 ENVIRONMENTAL EQUIPMENT -

3.3.1 TEMPERATURE-ALTITUDE-HUMIDITY TEST EQUIPMENT - BEMCO Environmental Chamber, Model WFA-100-45.

3.3.2 VIBRATION TEST EQUIPMENT - MB Model C-25H Shaker System with associated monitoring and recording equipment.

3.3.3 ACCELERATION TEST EQUIPMENT - Not applicable.

3.3.4 RAIN TEST EQUIPMENT - Rain simulation assembly, Convair built.

3.3.5 SALT SPRAY TEST EQUIPMENT - Salt or corrosion test cabinet, Industrial Pump Manufacturing Co., Type CA.

3.3.6 FUNGUS RESISTANCE TEST EQUIPMENT - Convair Test Labs Incubator Oven, and associated control equipment manufactured by Blue Line Company.

3.3.7 SAND AND DUST TEST EQUIPMENT - High and low velocity Sand and Dust Chamber, Hieatt Engineering Co., Model SDHL-12, USAF 904573.

4.0 TEST PROCEDURES:

4.1 TEST CONDITIONS -

4.1.1 ATMOSPHERIC CONDITIONS - Unless otherwise specified herein or in the test specimen specification, all tests shall be performed at an atmospheric pressure between 28 inches and 32 inches of mercury, a temperature between +60°F and 95°F, and a relative humidity of not more than 90%. Data from tests performed at other than the atmospheric conditions specified shall include corrections for instrument compensation.

4.1.2 TOLERANCES - The maximum allowable tolerances on test conditions shall be as follows:

a)	Temperature	±1°F
b)	Barometric Pressure	±5%
c)	Relative Humidity	±1%
d)	Vibration Amplitude	±1%
e)	Vibration Frequency	±2%
f)	Acceleration	±1%
g)	Shock	±1%

4.1.3 MEASUREMENTS - All measurements shall be made with instruments whose accuracies have been certified by the Astronautics Standards Laboratory and which bear a current calibration decal.

4.1.4 TEST SPECIMEN OPERATION - Operational and functional tests of the test specimen shall be conducted as outlined in this procedure.

4.1.5 ADJUSTMENTS AND REPAIRS DURING TESTS - No adjustment, maintenance, or repairs of the test specimen, other than those specifically stated in this procedure, shall be allowed after the start of the Initial Satisfactory Performance Tests. Exceptions to this shall be made when in the opinion of the Components Test Lab and designated witnesses, adjustments, repairs, or maintenance are not due to faults in design, workmanship, materials, or to the test conditions imposed.

4.1.6 TEMPERATURE STABILIZATION - Temperature stabilization has been reached when the temperature of the largest centrally located mass of the test specimen does not vary more than 5°F from the temperature ambient to the equipment.

4.0 TEST PROCEDURES: (CONT'D)

4.1.7 PRELIMINARY INSPECTION - The test specimen shall be examined visually prior to any other test to determine that the specimen meets the requirements of workmanship, identification markings, external dimensions, finish, cleanliness and proper inspection approval.

4.1.8 INITIAL SATISFACTORY PERFORMANCE TEST - The following tests shall constitute the Initial Satisfactory Performance Test for the test specimen.

a. With switches S2 and S4 closed, apply 115VAC 60cps to the specimen. Press all lights and check their operation. Note: Leave switch S1 open.

b. Close switch S1 and check the operation of light XI3 (power on).

c. Press lights XI1 (heater normal) and XI2 (heater failure) and check their operation.

d. Close switch S3 and check operation of all lights.

e. Open and close switch S4 and check the operation of all lights.

f. Open switch S2. Check the operation of lights XI1 (heater normal) and XI2 (heater failure). Measure the voltage from K3-A3 to ground.

g. Open switch S3 and check the operation of all lights. Measure the voltage from K1-A3 to ground.

h. Open switch S1 and check the operation of all lights.

4.1.9 PROOF CYCLE TEST - The following tests shall constitute the proof cycle, the results of which shall form the basis for indicating satisfactory performance of the test specimen under applicable environmental tests.

a. Same as Paragraph 4.1.8.

4.0 TEST PROCEDURES: (Continued)

4.2 TEMPERATURE - ALTITUDE - HUMIDITY TESTS -

4.2.1 MISSILEBORNE EQUIPMENT - Not applicable.

4.2.2 TEST GROUND SUPPORT EQUIPMENT - The following test sequence shall be conducted in a Temperature - Altitude - Humidity Test Chamber in the order specified. A thermocouple shall be placed in good thermal contact on the largest centrally located internal mass within the equipment, or any other location necessary to check temperature stabilization.

a) Place test specimen in chamber. Chamber temperature and atmospheric conditions as specified in Paragraph 4.1.1.

Perform tests as specified in the applicable Paragraph of 4.1.9 and record data.

b) Stabilize test specimen (non-operating) at plus 125°F for one hour.

Maintain chamber temperature and subject largest surface area of test specimen to radiant heat at the rate of 360 BTU/sq.ft./hr. for a period of 4 hours.

Determine the maximum test specimen temperature during this test for use in the following tests requiring a "maximum non-operating temperature".

c) Reduce chamber temperature to minus 65°F at a rate of 0.75 to 1.25°F per minute.

Maintain the above temperature for a period of not less than 8 hours, or until the test specimen stabilizes, whichever is longer.

Raise chamber temperature to minus 30°F and maintain at this temperature until test specimen temperature stabilizes.

During or at the end of the minus 30°F temperature period, reduce the chamber absolute pressure to 3.44 inches of mercury for one hour and then return the chamber to approximately 30 inches of mercury.

At minus 30°F and 30 inches of mercury, perform the tests specified in the applicable Paragraph of 4.1.9 and record the data.

4.0 TEST PROCEDURES: (Continued)

4.2.2 TEST GROUND SUPPORT EQUIPMENT - (Continued)

c) (Continued)

At minus 30°F, operate the test specimen as specified in the applicable paragraph of 4.1.9 while reducing the chamber absolute pressure to 20.59 inches of mercury and record all data.

d) With test specimen non-operating, return chamber pressure to 30 inches of mercury and increase chamber temperature at the rate of 0.75 to 1.25°F per minute to the maximum non-operating temperature or plus 160°F, whichever is greater, and maintain at this temperature for 4 hours or until test specimen temperature stabilizes, whichever is longer.

Maintain chamber at maximum non-operating temperature and a relative humidity of not less than 95% for a period of not less than 7 hours.

Remove excess moisture and condensate from chamber prior to performing the following altitude tests.

Reduce chamber internal absolute pressure to 3.44 inches of mercury (relative humidity may be decreased) for 1 hour.

Return chamber pressure to approximately 30 inches of mercury and a relative humidity of not less than 95%.

At the maximum non-operating temperature (or 160°F, whichever is greater), and a relative humidity of not less than 95%, operate the test specimen as specified in the applicable paragraph of 4.1.9 and record all data.

Remove excessive moisture and condensate from the chamber prior to performing the following altitude tests.

Operate test specimen as specified in the applicable paragraph of 4.1.9 while reducing chamber internal absolute pressure to [illegible] inches of mercury within a period of 10 minutes (no [illegible]), and record all data.

4.0 TEST PROCEDURES: (Continued)

4.2.2 TEST GROUND SUPPORT EQUIPMENT - (Continued)

e) Return chamber absolute internal pressure to 30 inches of mercury, a chamber temperature to plus 40°F at a rate of 0.75 to 1.[illegible]°F per minute, and a relative humidity of not less than 95%. Maintain above conditions for a period of 4 hours, or until equipment stabilizes, whichever is greater.

At the end of the stabilizing period, operate the test specimen as specified in the applicable paragraph of 4.1.9 and record all data.

f) Return chamber to conditions specified in Paragraph 4.1.1 and maintain at these conditions until equipment temperature stabilizes.

Perform tests on specimens as specified in the applicable Paragraph of 4.1.9 and record all data.

4.0 **TEST PROCEDURES: (Continued)**

4.3 SALT ATMOSPHERE TEST - The test specimen shall be mounted in the test chamber.

Increase the temperature of the test chamber to 95°F ±3°F and maintain at this temperature.

Compressed air shall be bubbled through a salt solution causing a saline vapor to permeate the chamber. Sodium chloride of C.P. quality shall be used. The concentration of salt shall be 2.35 per cent by weight, with a hydrogen ion concentration of pH 6.8 to 7.2

Duration of the Salt Atmosphere Test shall be at least 100 hours.

At the completion of the test period, the specimen shall be operated according to the test specified in the applicable paragraph of 4.1.9 and a record shall be made of all data.

4.4 FUNGUS RESISTANCE TEST - Fungus resistance tests shall be performed according to the following procedure:

4.4.1 PROCEDURE - Five groups of fungi are listed below, and one species of fungus from each group shall be used. In the preparation of the spore suspension, distilled water having a pH value between 5.8 and 7.2 at temperatures between 72°F and 89°F shall be utilized. Approximately 10 ml of distilled water shall then be introduced directly into a tube culture of the fungus and the spores brought into suspension by gentle rubbing of the spore layer with an inoculating loop without disturbing the agar surface. This process is repeated for each species of fungus. The separate spore suspensions from the five species of fungi shall be mixed together to provide a composite suspension. Actively sporulating cultures between 7 to 21 days old after initial inoculation shall be used for the preparation of the spore suspension. After preparation, the spore suspension will not be kept for more than a 24 hour period at temperatures between 72°F and 89°F and not more than 48 hours at refrigerator temperatures of 35°F to 45°F. The equipment, including applicable external connections, shall be placed in a chamber equal to that described in Specification MIL-C-9452, maintained at internal temperature of 30° ±2°C (86° ±3.6°F) and a relative humidity of 95 ±5 percent, and sprayed with the suspension of mixed spore. The test period shall be 28 days. At the end of the test period, the test item shall be examined visually in accordance with Paragraph 4.1.7.

4.0 TEST PROCEDURES: (Continued)

4.4.1.1 ORGANISMS -

Group I Chaetomium globosum USDA 1042.4 Myrothecium verrucaria USDA 1334.2.

Group II Rhizopus nigricans S.N. 32 or Aspergillus niger USDA Tc215-4247.

Group III Aspergillus flavus WADC No. 26 or Aspergillus terreus PQMD 82J.

Group IV Penicillium luteum USDA 1336.1, Penicillium sp USDA 1336.2 or Penicillium citrinum ATCC 9849.

Group V - Memnoniella echinata WADC No. 37 or Fusarium moniliforme USDA 1004.1.

4.5 RAIN TEST - The rain test shall be performed according to the following procedure:

4.5.1 PROCEDURE - The test specimen shall be mounted in the test chamber to simulate installation conditions. The rain test temperature shall be maintained between 20° and 30°C (68° to 86°F) throughout the test period. A simulated rainfall of 4 ±1 inch per hour shall be produced by means of a water spray nozzle of such design that the water is emitted in the form of small droplets rather than a fine mist. The temperature of the water shall be maintained between 11°C to 20°C (51.8 to 68°F). The rainfall shall be dispersed uniformly over the test area within the limits as specified above. Duration of the test shall be 2 hours, at the completion of which the equipment shall be examined for evidence of water penetration or damage.

4.0 TEST PROCEDURES: (Continued)

4.6 SAND AND DUST TEST - The sand and dust test shall be performed according to the following procedure:

4.6.1 PROCEDURE - The test specimen shall be placed within the test chamber equal to that described in specification MIL-C-9436 and the sand and dust density raised and maintained at 0.1 to 0.5 grams per cubic foot within the test space. The relative humidity shall not exceed 30 percent at any time during the test. Sand and dust used in the test shall be of angular structure and shall have characteristics as follows:

a) 100 percent of the sand and dust shall pass through a 100 mesh screen, U.S. Standard Sieve Series.

b) 98 ±2 percent of the sand and dust shall pass through a 140 mesh screen, U.S. Standard Sieve Series.

c) 90 ±2 percent of the sand and dust shall pass through a 200 mesh screen, U.S. Standard Sieve Series.

d) 75 ±2 percent of the sand and dust shall pass through a 325 mesh screen, U.S. Standard Sieve Series.

e) Chemical analysis of the dust shall be as follows:

SUBSTANCE	PERCENT BY WEIGHT
SiO_2	97 to 99
Fe_2O_3	0 to 2
Al_2O_3	0 to 1
TiO_2	0 to 2
MgO	0 to 1
Ign Losses	0 to 2

The internal temperature of the test chamber shall be maintained at 25°C (77°F) for a period of 6 hours, with sand and dust velocity through the test chamber between 100 to 500 feet per minute (2300 ±500 feet per minute if specified in the detail specification). After 6 hours at above conditions, the temperature shall be raised to and maintained at 71°C (160°F). These conditions shall be maintained for 6 hours. At the end of this test period, the equipment shall be removed and allowed to cool to room temperature and shall be operated and a record made of all data necessary to determine compliance with the test specified in applicable paragraphs of 4.1.9.

4.0 TEST PROCEDURES: (CONT'D)

4.7 EXPLOSION PROOF TESTS - Not applicable.

4.8 NON-OPERATING SHOCK AND VIBRATION TESTS - Test specimens shall be subjected to the following shock and sinusoidal vibration tests as specified in the particular component specification, except where the test specimen size and weight make it impractical to do so.

4.8.1 SHOCK TESTS - Immediately following each of the following test procedures, the test specimen shall be operated and a record made of all data necessary to determine compliance with paragraph 4.1.9.

4.0 TEST PROCEDURES: (Continued)

4.8.1.1 PROCEDURE I - The test specimen, when not packaged for shipment, shall be subjected to a shock whose shock spectrum in both plus and minus directions is at least 100 G for each frequency from 100 to 700 cps. The shock shall be applied at least one along each of three mutually perpendicular axes. If the test specimen is vibration mounted on the missile, the shocks shall be applied with the vibration mounting removed.

4.8.1.2 PROCEDURE II - The test specimen, packaged for shipment, shall be dropped to a flat concrete surface once in each direction along each of the three major mutually perpendicular axes except that the test specimen of over 1000 lbs. weight shall be dropped only in its normal mounting and transportation position. Height of drop shall depend on weight, as follows:

0 - 20 lbs.	42 inches
21 - 50 lbs.	36 inches
51 - 250 lbs.	30 inches
250 - 500 lbs.	24 inches
Over 500 lbs.	12 inches

4.8.2 VIBRATION TESTS -

4.8.2.1 PROCEDURE - Whenever a storage and shipment case is provided, it shall be included in the test setup. The test specimen shall be fastened securely on a suitable vibration machine in a position dynamically simiar to the most severe position likely to be employed during shipment. Vibration tests shall be conducted under both resonant and cycling conditions as directed in Paragraphs 4.8.2.2 and 4.8.2.3. When practicable, the test specimen shall be tested functionally prior to and immediately following this test. At the end of the test period, the test specimen shall be inspected thoroughly for damage or defects resulting from the vibration test. The applied test conditions shall be as follows:

Frequency	Double Amplitude or Vibratory Acceleration
5 cps to 27.5 cps	±1.3 G
27.5 cps to 52 cps	0.036 inch
52 cps to 500 cps	±5 G

When the test specimen incorporates cushioning materials likely to be appreciable influenced by extreme temperature conditions

4.0 TEST PROCEDURES: (Continued)

4.8.2.1 PROCEDURE - (Continued)

(-65°F to +160°F) vibration temperature tests shall be conducted. The vibration test periods shall be equally divided into 3 periods - one period for each of the following temperature range; high, low, and room ambient temperature.

4.8.2.2 RESONANCE - Resonant frequencies of the test specimen shall be determined by varying the frequency of applied vibration slowly through the 5 to 500 cps frequency range at double amplitudes or accelerations not exceeding those given above. This procedure shall be followed successively for vibration applied along each of three mutually perpendicular axes of the test specimen. Whenever practicable, covers shall be removed from the test specimen so that resonance may be determined. The specimen shall be vibrated for thirty minutes at each resonant mode encountered. This shall apply, in turn, for vibration applied along each of the three axes. When resonant frequencies within the specified frequency range are not apparent, the specimen shall be vibrated for one hour along each axis under the cycling conditions given below:

4.8.2.3 CYCLING - A frequency cycling test also shall be conducted in which the test frequency shall vary linearly from 10 cps to 500 cps and return to 10 cps in a 15 minute interval. Between 10 cps and 52 cps, the double amplitude applied shall be 0.036 inch and from 52 cps to 500 cps, the vibratory acceleration shall be ±5 G. The test specimen shall be subjected to 3 cycline variations (45 minutes) along each axis of vibration.

4.9 OPERATING VIBRATION TESTS - Not applicable.

4.10 OPERATING ACCELERATION TESTS - Not applicable.

4.0 TEST PROCEDURES: (Continued)

4.11 TEMPERATURE SHOCK TEST - The test specimen shall be subjected to the following temperature shock test:

4.11.1 PROCEDURE - The test specimen shall be placed within the chamber and the chamber maintained at a temperature of 70°F ±5°F for a period of at least one hour, or until the test specimen temperature stabilizes. The test specimen shall then, within a period of 2 minutes, be placed in a chamber whose temperature is at maximum non-operating temperature, or 160°F, whichever is greater, and maintained at this temperature for a period of one hour, or until the test specimen temperature stabilizes, whichever is longer. The test specimen shall then, within a period of 2 minutes, be placed in a chamber whose temperature is minus 65°F, and maintained at this temperature until the test specimen temperature stabilizes. The test specimen shall then be returned to room ambient conditions and examined for evidence of deterioration, and operated and a record made of all data necessary to determine compliance with the tests outlined in the applicable paragraph of 4.1.9.

4.12 SUNSHINE TEST - Not applicable.

4.0 TEST PROCEDURES: (CONT'D)

4.13 RADIO INTERFERENCE TESTS - Not required.

4.14 LIFE TESTS - Not required.

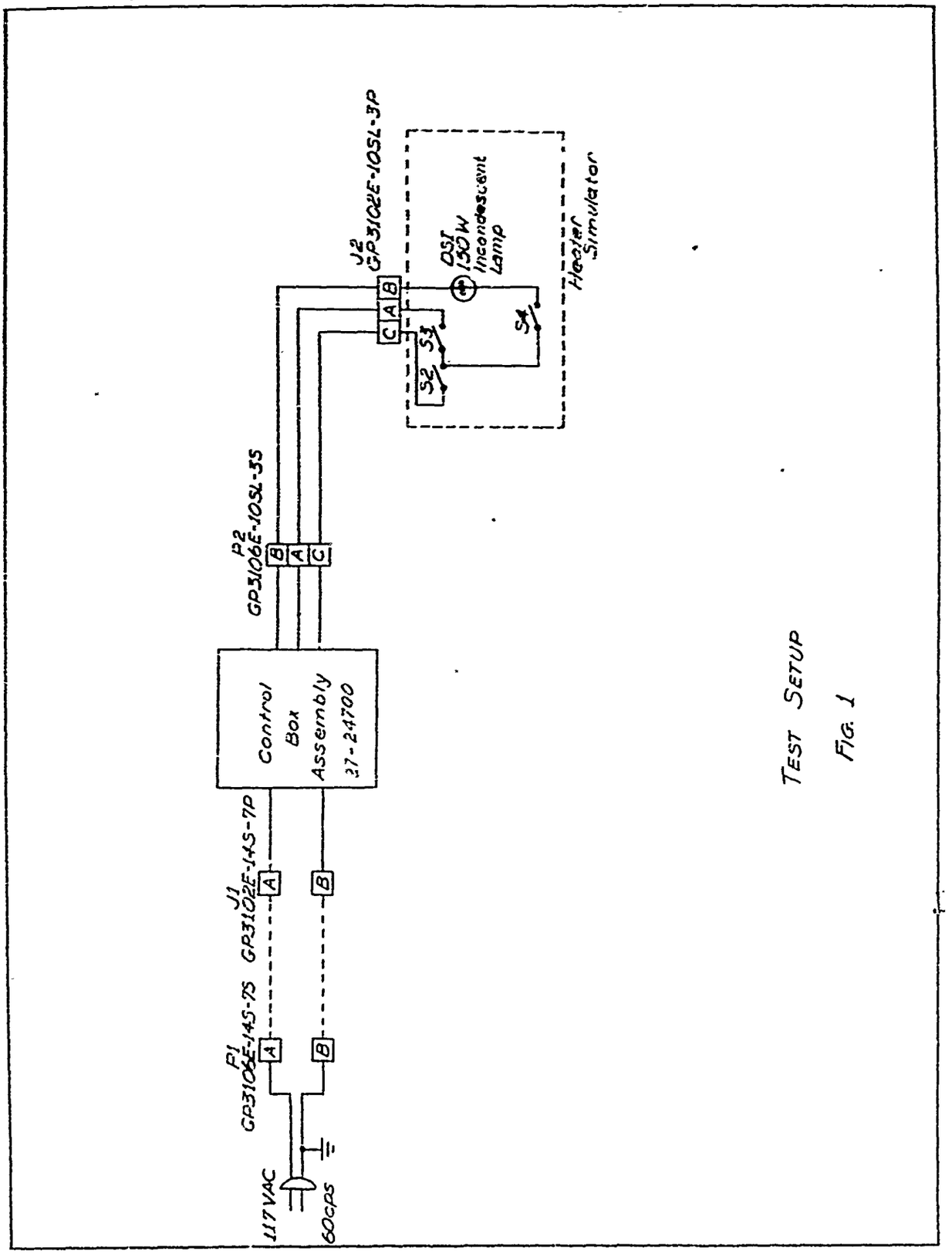

TEST SETUP

FIG. 1

4.1 TEST PROCEDURES: Cont.
(Refer to Paragraph No. 4.1.8 & 4.2.2(a))
S/N 21-3-10 Model No. -1 Part No. 27-24100
Test Conditions: Z.S.P.T. @ +78°F.

AND TEMP.-ALT.-HUMIDITY TEST AT +78°F.

Date: August 8, 1960
Test Engr: [illegible]
CVA Insp: [illegible]
U.A. Insp: O.D. STUARD

Function	LIGHT OPERATION									VOLTAGE READINGS			
	XI1			XI2			XI3			K3-A3 to Gnd.		K1-A3 to Gnd.	
	NORMAL	on	off	NORMAL	on	off	NORMAL	on	off	NORMAL	value	NORMAL	value
Apply power, close switches S2 & S4.	off		X	off		X	off		X	--	N/A	--	N/A
Press to test all lights.	off		X	off		X	on	X		--	N/A	--	N/A
Close switch S1.	off		X	off		X	on	X		--	N/A	--	N/A
Press to test all lights.	on	X		on	X		on	X		--	N/A	--	N/A
Close switch S3.	on	X		off		X	on	X		--	N/A	--	N/A
Open switch S4.	on	X		off		X	on	X		--	N/A	--	N/A
Close switch S4.	on	X		off		X	on	X		--	N/A	--	N/A
Open switch S2.	off		X	on	X		on	X		0VAC	0	--	N/A
Open switch S3.	off		X	on	X		on	X		--	N/A	115VAC	115
Open switch S1.	off		X	off		X	off		X	--	N/A	--	N/A

REMARKS: Time On 1-12:10
Time Off 1-12:43
Operating Time -3 MINUTES.

CONVAIR ASTRONAUTICS

REPORT 27A634
PAGE 20

[illegible] 4.2.2 (C)
[illegible] 21-9-12 [illegible] -1 [illegible] 27-24700
[illegible] -37°F 4 PM. PRESSURE

[illegible] Aug 29, 1960
Test Engr: [illegible]
[illegible] Engr: [illegible]
[illegible] Engr: O. D. STUARD

Function	[illegible]									[illegible]			
	[illegible]									[illegible]		[illegible]	
	[illegible]	[illegible]	[illegible]	[illegible]	[illegible]	[illegible]	[illegible]	[illegible]	[illegible]	[illegible]	[illegible]	NO [illegible]	[illegible]
Apply power, [illegible] switch [illegible] & D4.	off		X	off		X	off		X	--	N/A	--	N/A
[illegible]	off		X	off		X	on	X		--	N/A	--	N/A
[illegible] switch [illegible].	off		X	off		X	on	X		--	N/A	--	N/A
[illegible]	on	X		[illegible]	X		on	X		--	N/A	--	N/A
[illegible] switch [illegible].	on	X		off		X	[illegible]	X		--	N/A	--	N/A
[illegible] switch D4.	on	X		off		X	on	X		--	N/A	--	N/A
Close switch [illegible].	on	X		off		X	on	X		--	N/A	--	N/A
Open switch D2.	off		X	on	X		on	X		0VAC	0	--	N/A
[illegible] switch [illegible].	off		X	on	X		on	X		--	N/A	115VAC	115
[illegible] switch [illegible].	off		X	off		X	off		X	--	N/A	--	N/A

[illegible]: Time On 12:03
Time Off 12:06
Operating Time 3 MINUTES

4. [illegible] Cont.
[illegible] Paragraph No. 4.2.2.(c)
[illegible] 21-6-13 Model No. [illegible] Part No. 27-24700
Test [illegible]: -35°F @ 20.58 in. Hg.

Date: Aug. 29, 1963
Test Engr: [illegible]
[illegible] Insp: [illegible]
[illegible] Insp: O. D. STUART

Function	LIGHT [illegible]									VOLTAGE READINGS			
	XI1			XI2			XI3			K3-A to Gnd.		K1-A to Gnd.	
	[illegible]	on	off	[illegible]	on	off	[illegible]	on	off	[illegible]	Value	[illegible]	Value
[illegible] power, [illegible] & S4.	off		x	off		x	off		x	--	N/A	--	N/A
[illegible] to test all [illegible].	off		x	off		x	on	x		--	N/A	--	N/A
[illegible] switch S1.	off		x	off		x	on	x		--	N/A	--	N/A
[illegible] to test all [illegible].	on	x		on	x		on	x		--	N/A	--	N/A
Close switch S3.	on	x		off		x	on	x		--	N/A	--	N/A
[illegible] switch S4.	on	x		off		x	on	x		--	N/A	--	N/A
Close switch S4.	on	x		off		x	on	x		--	N/A	--	N/A
[illegible] switch S2.	off		x	on	x		on	x		0VAC	0	--	N/A
[illegible] switch S[illegible].	off		x	on	x		on	x		--	N/A	115VAC	115
[illegible] switch [illegible].	off		x	off		x	off.		x	--	N/A	--	N/A

[illegible]: Time On 13:02
Time Off 13:04
Operating Time 2 min.

4. [illegible] 4.2.2(c)

21-6-10 [illegible] 27-24900

[illegible] +160°F @ 95% R.H.

[illegible] Aug 31, 1960

[illegible] [illegible]

[illegible] [illegible]

[illegible] C. L. [illegible]

[illegible]	[illegible]									[illegible]			
[illegible]	off		X	off		X	off		X	--	N/A	--	N/A
[illegible]	off		X	off		X	on	X		--	N/A	--	N/A
[illegible]	off		X	off		X	on	X		--	N/A	--	N/A
[illegible]	on	X			X		on	X		--	N/A	--	N/A
[illegible]	on	X		off		X	on	X		--	N/A	--	N/A
[illegible]	on	X		off		X	on	X		--	N/A	--	N/A
[illegible]	on	X		off		X	on	X		--	N/A	--	N/A
[illegible]	off		X	on	X		on	X		VAC	0	--	N/A
[illegible]	off		X	on	X		on	X		--	N/A	[illegible]	115
[illegible]	off		X	off		X	off		X	--	N/A	--	N/A

Time on 13:18

Time off 13:20

Operating Time 2 MIN.

4.0 TEST PROCEDURES: Cont.
Reference Paragraph No. 4.2.2 (d)
S/N 21-0-15 Model No. -1 Part No. 38-34700
Test Conditions: 165°F and 20.58 in. Hg.
no humidity control.

Date: Aug 31, 1960
Test Engr: [illegible]
CVA Insp: [illegible]
USAF Insp: D. D. STIARD

Function	LIGHT OPERATION									VOLTAGE READINGS			
	XI1			XI2			XI3			K3-A2toGnd.		K1-A3toGnd.	
	NORMAL	on	off	NORMAL	on	off	NORMAL	on	off	NORMAL	value	NORMAL	value
Apply power, close switches S2 & S4.	off		X	off		X	off		X	--	N/A	--	N/A
Press to test all lights.	off		X	off		X	on	X		--	N/A	--	N/A
Close switch 1.	off		X	off		X	on	X		--	N/A	--	N/A
Press to test all lights.	on	X		on	X		on	X		--	N/A	--	N/A
Close switch S3.	on	X		off		X	on	X		--	N/A	--	N/A
Open switch S4.	on	X		off		X	on	X		--	N/A	--	N/A
Close switch S4.	on	X		off		X	on	X		--	N/A	--	N/A
Open switch S2.	off		X	on	X		on	X		0VAC	0	--	N/A
Open switch S3.	off		X	on	X		on	X		--	N/A	115VAC	115
Open switch 1.	off		X	off		X	off		X	--	N/A	--	N/A

REMARKS: Time On 13:25
Time Off 13:26
Operating Time 1 MIN.

CONVAIR ASTRONAUTICS

4.1 [illegible] Cont.
Reference Paragraph No. 4.2.2(e)
S/N 2F-6-10 Model No. -1 Part No. 27-24100
Test Conditions: +40°F @ 95% R.H.

Date: Sept. 1, 1960
Test Engr: [illegible]
CVA Insp: [illegible]
USAF Insp: O. D. STUARD

Function	LIGHT OPERATION									VOLTAGE READINGS			
	X11			X12			X13			K3-A3 to Gnd.		K1-A3 to Gnd.	
	NORMAL	on	off	NORMAL	on	off	NORMAL	on	off	NORMAL	value	NORMAL	value
Apply power. Close switches S2 & S4.	off		X	off		X	off		X	--	N/A	--	N/A
Press to test all lights.	off		X	off		X	on	X		--	N/A	--	N/A
Close switch S1.	off		X	off		X	on	X		--	N/A	--	N/A
Press to test all lights.	on	X		on	X		on	X		--	N/A	--	N/A
Close switch S3.	on	X		off		X	on	X		--	N/A	--	N/A
Open switch S4.	on	X		off		X	on	X		--	N/A	--	N/A
Close switch S4.	on	X		off		X	on	X		--	N/A	--	N/A
Open switch S2.	off		X	on	X		on	X		0VAC	0	--	N/A
Open switch S3.	off		X	on	X		on	X		--	N/A	115VAC	115
Open switch S1.	off		X	off		X	off		X	--	N/A	--	N/A

REMARKS: Time On 0845
Time Off 0847
Operating Time 2 min

4.0 TEST PROCEDURES: Cont.
Reference Paragraph No. 4.2.2 (f)
S/N 31-4-10 Model No. -1 Part No. 22-24700
Test Conditions: Atmospheric conditions.

Date: Sept. 1, 1960
Test Engr: [illegible]
CVA Insp: [illegible]
USAF Insp: O. D. STUARD

Function	LIGHT OPERATION									VOLTAGE READINGS			
	X1			X2			X3			X3-A3 to Gnd.		X1-A3 to Gnd.	
	NORMAL	on	off	NORMAL	on	off	NORMAL	on	off	NORMAL	value	NORMAL	value
Apply power, close switches S2 & S4.	off		X	off		X	off		X	--	N/A	--	N/A
Press to test all lights.	off		X	off		X	on	X		--	N/A	--	N/A
Close Switch S1.	off		X	off		X	on	X		--	N/A	--	N/A
Press to test all lights.	on	X		On	X		on	X		--	N/A	--	N/A
Close switch S3.	on	X		off		X	on	X		--	N/A	--	N/A
Open switch S4.	on	X		off		X	on	X		--	N/A	--	N/A
Close switch S4.	on	X		off		X	on	X		--	N/A	--	N/A
Open switch S2.	off		X	on	X		on	X		0VAC	0	--	N/A
Open switch S3.	off		X	on	X		on	X		--	N/A	115VAC	115
Open switch S1.	off		X	off		X	off		X	--	N/A	--	N/A

REMARKS: Time On 13:28
Time Off 13:29
Operating Time 1 minute.

CONVAIR ASTRONAUTICS

REPORT 27A634
PAGE 28

4.6 TEST PROCEDURES: Cont.
Refer to Paragraph No. 4.6
S/N 21-8-10 Model No. -1 Part No. 22-27700
Test Conditions: POST SAND & DUST PROOF CYCLE

Date: Sept 7 1960
Test Engr: [illegible]
CVA Insp: [illegible]
USAF Insp: O.D. STUARD

Function.	LIGHT OPERATION XI1 NORMAL	XI1 on	XI1 off	XI2 NORMAL	XI2 on	XI2 off	XI3 NORMAL	XI3 on	XI3 off	VOLTAGE READINGS X3-A3 to Gnd. NORMAL	X3-A3 to Gnd. value	X1-A3 to Gnd. NORMAL	X1-A3 to Gnd. value
Apply power, close switches S2 & S4.	off		X	off		X	off		X	--	N/A	--	N/A
Press to test all lights.	off		X	off		X	on	X		--	N/A	--	N/A
Close Switch S1.	off		X	off		X	on	X		--	N/A	--	N/A
Press to test all lights.	on	X		on	X		on	X		--	N/A	--	N/A
Close switch S3.	on	X		off		X	on	X		--	N/A	--	N/A
Open switch S4.	on	X		off		X	on	X		--	N/A	--	N/A
Close switch S4.	on	X		off		X	on	X		--	N/A	--	N/A
Open switch S2.	off		X	on	X		on	X		0VAC	0	--	N/A
Open switch S3.	off		X	on	X		on	X		--	N/A	115VAC	115
Open switch S1.	off		X	off		X	off		X	--	N/A	--	N/A

REMARKS: Time On 9:06
Time Off 9:08
Operating Time 2 MINUTES

CONVAIR ASTRONAUTICS

REPORT 27464
PAGE 27

4.0 TEST PROCEDURES: Cont.
Reference Paragraph No. 4.3
S/N 21-0-10 Model No. -1 Part No. 27-24200
Test Conditions: POST SALT ATMOSPHERE PROOF CYCLE

Date: Sept 12, 1960
Test Engr: [illegible]
CVA Insp: [illegible]
USAF Insp: O. D. STUARD

Function	LIGHT OPERATION									VOLTAGE READINGS			
	X11			X12			X13			K3-A3 to Gnd.		K3-A3 to Gnd.	
	NORMAL	on	off	NORMAL	on	off	NORMAL	on	off	NORMAL	value	NORMAL	value
Apply power, close switches S2 & S4.	off		X	off		X	off		X	--	N/A	--	N/A
Press to test all lights.	off		X	off		X	on	X		--	N/A	--	N/A
Close Switch S1.	off		X	off	X		on	X		--	N/A	--	N/A
Press to test all lights.	on	X		On	X		on	X		--	N/A	--	N/A
Close switch S3.	on	X		off	X		on	X		--	N/A	--	N/A
Open switch S4.	on	X		off	X		on	X		--	N/A	--	N/A
Close switch S4.	on	X		off	X		on	X		--	N/A	--	N/A
Open switch S2.	off		X	on	X		on	X		0VAC	75VAC	--	N/A
Open switch S3.	off		X	on	X		on	X		--	N/A	115VAC	115VAC
Open switch S1.	off		X	off		X	off		X	--	N/A	--	N/A

REMARKS: Time On 10:00
Time Off 10:06
Operating Time 6 MIN.

① THE RED FAILURE LIGHT GLOWS AT ALL TIMES AS SOON AS S2 IS ON.
② WHEN S2 IS OPENED THE VOLTAGE AT K3-A3 TO GROUND DOES NOT FALL TO 0 VOLTS AC.