UNCLASSIFIED

AD NUMBER

AD843105

NEW LIMITATION CHANGE

TO

Approved for public release, distribution unlimited

FROM

Distribution authorized to U.S. Gov't. agencies and their contractors; Administrative/Operational Use; Jul 1968. Other requests shall be referred to Naval Weapons Center, China Lake, CA.

AUTHORITY

USNWC ltr, 30 Aug 1974

THIS PAGE IS UNCLASSIFIED

NWC TP 4464
Part 1
COPY 405

AD843105

ENVIRONMENTAL CRITERIA DETERMINATION FOR AIR-LAUNCHED TACTICAL PROPULSION SYSTEMS

Part 1. STOCKPILE-TO-TARGET SEQUENCE

By

Howard C. Schafer
Propulsion Development Department

ABSTRACT. Part 1 discusses the stockpile-to-target sequence for air-launched tactical propulsion systems and gives environmental limitations, where known. Assumptions or projections are included in the unknown areas, based upon the author's best estimate. Those areas of environmental criteria where investigation must be conducted are discussed in Part 2.

D D C
NOV 1 8 1968
B

NAVAL WEAPONS CENTER
CHINA LAKE, CALIFORNIA * JULY 1968

DISTRIBUTION STATEMENT
THIS DOCUMENT IS SUBJECT TO SPECIAL EXPORT CONTROLS AND EACH TRANSMITTAL TO FOREIGN GOVERNMENTS OR FOREIGN NATIONALS MAY BE MADE ONLY WITH PRIOR APPROVAL OF THE NAVAL WEAPONS CENTER.

34

NAVAL WEAPONS CENTER
AN ACTIVITY OF THE NAVAL MATERIAL COMMAND

M. R. Etheridge, Capt., USN ..... Commander
Thomas S. Amlie, Ph.D. ..... Technical Director

FOREWORD

This report consists of three parts:

Part 1. Stockpile-to-Target Sequence, which contains the environmental limitations in chart form for easy reference.

Part 2. Technical Support for Stockpile-to-Target Sequence, which discusses each criterion presented in Part 1 and gives the reasoning, technical limitations and work required in each area.

Part 3. Description of the Environment, which defines the environments treated in Part 1 and details an environmental frame of reference for the test engineer, designer, and project manager.

Part 1 is the part of the report which will be most widely used, Parts 2 and 3 are available as needed to support Part 1.

This work was supported by Task Assignment Number A33-536-711/216-1/F009-06-02, Problem Assignment Number 6.

This report has been reviewed for technical accuracy by Warren W. Oshel.

Released by
CRILL MAPLES, Head
Quality Assurance Division
19 July 1968

Under authority of
G. W. LEONARD, Head
Propulsion Development Department

NWC Technical Publication 4464, Part 1

Published by.....Propulsion Development Department
Collation.....Cover, 15 leaves, DD Form 1473, abstract cards
First printing..... 655 numbered copies
Security classification.....UNCLASSIFIED

PAGES _____

ARE

MISSING

IN

ORIGINAL

DOCUMENT

Regarding the report entitled *Environmental Criteria Determination for Air-Launched Tactical Propulsion Systems, Part 1, Stockpile-to-Target Sequence* (TP 4464, Part 1), by Howard Schafer, may we have your answers to the following questions?

1. Is the method of presentation satisfactory? _____
2. Do we need more explanatory material? _____
3. Do we need more, or less, educational material (as presented in the appendices)? _____

Additional comments (negative as well as favorable) are welcome:

WHITE SECTION
BUFF SECTION
UNANNOUNCED
JUSTIFICATION
DISTRIBUTION/AVAILABILITY CODES
DIST. AVAIL. and/or SPECIAL

Name _____
Organization _____ Code No. _____
Address _____
Street City State Zip
Telephone No. Commercial _____ Autovon _____

Regarding the report entitled *Environmental Criteria Deptermination for Air-Launched Tactical Propulsion Systems, Part 1, Stockpile-to-Target Sequence* (TP 4464, Part 1), by Howard Schafer, may we have your answers to the following questions?

1. Is the method of presentation satisfactory? _____
2. Do we need more explanatory material? _____
3. Do we need more, or less, educational material (as presented in the appendices)? _____

Additional comments (negative as well as favorable) are welcome:

Name _____
Organization _____ Code No. _____
Address _____
Street City State Zip
Telephone No. Commercial _____ Autovon _____

DEPARTMENT OF THE NAVY
Commander (Code 45330)
Naval Weapons Center
China Lake, California 93555

OFFICIAL BUSINESS

POSTAGE AND FEES PAID
NAVY DEPARTMENT

TO: Commander (Code 45330)
Naval Weapons Center
China Lake, California 93555

DEPARTMENT OF THE NAVY
Commander (Code 45330)
Naval Weapons Center
China Lake, California 93555

OFFICIAL BUSINESS

POSTAGE AND FEES PAID
NAVY DEPARTMENT

TO: Commander (Code 45330)
Naval Weapons Center
China Lake, California 93555

ACKNOWLEDGMENT

The author wishes to thank the following: The U.S. Army, Natick Laboratories for basic scientific foundation on which this work is partially based; Lieutenant Commander Loren Kinne, U.S. Navy, for information on ammunition ships and at-sea-transfer; Mr. Isamu S. Kurotori for igloo storage temperature statistical data; Mr. Russell N. Skeeters for the section on radio frequency hazards; Mr. Joseph R. Togami for assistance in the dynamics area; Mr. Billy D. Martin for installing worldwide measurement complexes; and Messrs R. J. Morey and Jack L. Bateman for editorial assistance.

CONTENTS

Introduction..... 1
Background..... 1
Test Usage..... 2

State of the Present Usage..... 2
Problem Solution..... 3
Response Versus Forcing Function..... 3
Example..... 4
Stockpile-to-Target Sequence..... 6
Environmental State-of-the-Art..... 9
Survival Versus Function..... 9
Unit Life..... 15

Assumed, Projected Environmental Criteria..... 15

Report Uses..... 16
Projected Use..... 17

Appendix - Supplementary Documentary Reading..... 19

Figures:

1. Forcing Functions..... 5

2. Stockpile-to-Target Sequence..... 7

Tables:

1. Environmental Criteria for Air-Launched Tactical Propulsion Systems..... 11

2. Preliminary Assumed Environmental Criteria for Air-Launched Tactical Propulsion Systems..... 13

INTRODUCTION

Through the years, the environmental criteria for air-launched rocket motors has been assigned from generally nonapplicable data gathered for specific types of military equipment. A quick look at the titles of the military specifications listed as references to any air-launched rocket motor weapon specification, will bear this out. For example, Military Specification MIL-E-5272C, "Environmental Testing, Aeronautical and Associated Equipment," and Military Standard 810, "Environmental Test Methods for Aerospace and Ground Equipment," are probably the most applicable of the list. However, even these two specifications are either derived for, or for use as, electronic development criteria. The fact is that there has never been a specification written that describes only the total overall need of an air-launched tactical propulsion system. The most commonly used specifications all use information that may or may not be correct when applied to the intended situations. These criteria invariably are not correct when used in the context of an air-launched tactical propulsion system. The only way in which this problem can be recognized and corrected is to logically detail the needs of air-launched tactical propulsion systems, perform the called for environmental measurements, and then write meaningful specifications. This document is intended to place the prevailing situation in context, and can be used as a framework for the determination of environmental problem areas.

BACKGROUND

The Department of Defense has directed that MIL-STD 210 shall be used as a mandatory basis for the environmental criteria to which any item of ordnance or materiel shall be designed. This specification, "Climatological Extremes for Military Equipments," is a good and useful document; however, its misuse has been universal to the present time. It contains the climatological extremes, or forcing functions, but not necessarily the extremes that an air-launched rocket motor will experience. The purpose of this report is to place the two criteria into proper context.

It is safe to say that any climatological extreme may well be the limiting situation, for example, cold temperature. Any item of ordnance does not, in general, exhibit skin or internal temperatures lower than the temperature of the surrounding ambient air. (The exception may possibly be a low mass item radiating into the clear arctic sky. Measurement has indicated that the phenomenom is in the order of 5 to 8°F lower skin temperature than the ambient air.) Therefore, if the ambient air temperature is the major thermodynamic driving force, then the energy level of the driven item should not be less than that of the driving force. In fact, the temperature of most ordnance items, even when exposed to the ambient cold air, will not reach equilibrium with the cold air.

On the desert or tropic side of environmental exposure, the ambient air temperature is a secondary thermodynamic driving force. The direct radiation (insolation) from the sun is the primary driving force. This is the reason that ground surface and ordnance container surface temperatures in excess of 170°F have been measured even though the standard air temperature was less than 110°F.

From the above examples, it is indicated that an interpretive link between the "Climatic Extremes" and the designer of air-launched ordnance should exist.

TEST USAGE

Any environmental test procedure must be based on two facts: (1) it must be stipulated that, in the case of the "natural" environment, the final authority, as to whether a test procedure is valid, is fleet usage and "Mother Nature," and (2) it must be understood that a test has no other purpose than to aid in the prediction of how the item will react in fleet usage.

The above being true, then it is mandatory that no test be performed unless the testing agency can answer the question of "what will the results of this test indicate". In order to answer this question, the testing authority must have complete knowledge of the test item. He must know if the ageing characteristics of the test item can be artifically accelerated by extending the extreme value, or whether the extension will needlessly damage a good design. He must also know if a combination of one or more separate tests will more realistically expose an inherent weakness of the given item.

For example, if an ordnance item works well with low temperature components (i.e., X-12 propellant), and the stockpile-to-target sequence indicates that the maximum equilibrium temperature is less than 135°F, no useful information can be derived by testing the unit to 200°F. The only information to be gained is that the X-12 propellant starts to breakdown and discolor badly, and this fact is already known. The point is that a test based on the fleet oriented fact, that 135°F is the maximum equilibrium temperature, will allow the X-12 to be used, whereby an unrealistic "standard" test causes failure of an otherwise useful design.

STATE OF THE PRESENT USAGE

The levels of severity of environmental parameters used for design and qualification of air-launched tactical propulsion systems are not abreast of the state-of-the-art. The specifications used to qualify units are still primarily based on nonapplicable procedures. The extreme "test" conditions also are suspect. MIL-E-5272 was written in the post

World War II period for airborne electronics and MIL-STD 810, which was derived from MIL-E-5272, indicates no major change in the testing for the natural environment. However, the dynamic environment listed in MIL-STD 810 is the most accurate of any present day specification. The philosophy underlying the era of these specifications was to set a "GO—NO-GO" limit to which the hardware would be subjected. These limits have proven to be mainly nonanalogous to in-fleet reality. The significance of an item passing or failing a given sequence of environmental tests is open to serious question. If an item fails a test that is five to eight times more severe than actual conditions, what has been accomplished? Will the item therefore fail in the less severe in-fleet situation? Also, if the item passes the same test, will it survive a longer exposure to a lower level of the criterion? Is designing a unit to pass the overtest making use of the best engineering practices? The preceding questions must be asked and need to be answered. The author's investigations have indicated that a "reasonable doubt" exists as to the adequacy of present environmental criteria.

After a thorough check of the literature and contact with the personnel in the field of "environment", it becomes apparent that the entire foundation on which environmental testing is based must be reexamined. Advances in the technology of simulation also require that present machine-limited test criteria be reevaluated and/or replaced. Qualification methods must be established that accelerate the aging characteristics of the components of an air-launched unit. Those established for electronics may or may not apply. If they do apply, they must be used in context, not as they are used today.

PROBLEM SOLUTION

Too often the total environmental problem is overlooked. Before the problem can be solved, there are four steps to be investigated: (1) Problem identification, (2) problem definition, (3) problem attack, and (4) problem solution. Too many times the approach is to jump in at step three. More effort must be placed in the areas of steps one and two. Once the magnitude of the problem is clearly outlined, then nonproject-oriented steps can be planned to fill the exposed knowledge gaps. Once these gaps are filled, the way is clear toward writing intelligent simulation procedures for any air-launched item. Future investigations could be simplified if detailed records, which contained simulation procedures and reports on the effect of fleet storage on the item, where established and maintained.

RESPONSE VERSUS FORCING FUNCTION

The investigation of the environment must be divided into logical units. The first unit of necessity is that of determining what are the climatological extremes. This work unit can be and has in part been

done by the scientist engaged in meteorology, geology, etc. These investigators have made a very able beginning in the ordering of the natural climatological phenomena. This work will be referred to as the determination of the forcing functions. It must be understood that the forcing functions exist, whether or not the ordnance item is exposed to them. (Fig. 1.)

The second unit of investigation is to classify the responses of given ordnance to the primary forcing functions. Once the forcing functions are understood and measured in context, then the response of any item can also be measured in that context. For example; the meteorologist can very accurately describe a maximum temperature day. He can produce hourly plots of solar insolation, air temperature, relative humidity, etc. With this information, one can determine whether or not the responses measured on a given ordnance item, exposed to a summer day, is representative of a maximum thermal exposure. If the forcing function was maximum, then the response will be the most extreme that can be expected for that type of ordnance.

Now that the response to a given forcing function can be determined, and the general context in which it will exist specified, the designer can design his oncoming unit to withstand that magnitude of exposure which is most extreme for that particular item.

Families of ordnance may possibly exhibit similar responses to the various forcing functions, and these families should be identified.

However, it must be understood that all ordnance will not respond to the same magnitude for a given forcing function. Therefore, the catalogue of response of one item may or may not be usable in the design of a different type item.

Figure 1 shows that there are many different forcing functions, or "environments" which are always present in any actual situation. These forcing functions can be measured without the rocket entering the proceedings. However, the reaction of the air-launched tactical propulsion system to these forcing functions determines the rank of recognition of the forcing function. For example; atmospheric pressure can vary from 27- to approximately 31-inches of mercury from foul to fair weather. However, this change in pressure has not led to failures of propulsion systems and therefore, this "environment" is ignored. Conversely, the change in temperature has caused many propellant problems; therefore, this forcing function is recognized, and studied in context.

Example

The key to the problem is to approach the environment in terms of a nonhardware oriented simulation. In the past, investigations have been

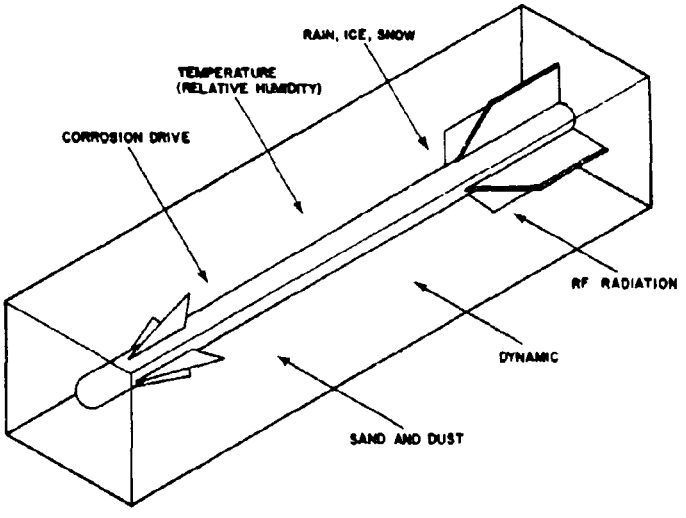

FIG. 1. Environmental Forcing Functions

made to determine how a given unit responds to a largely undefined environmental forcing function. This approach can be useful for a specific item; however, it becomes difficult to predict the response of even a similar item of different mass, shape, or density to the same forcing function. Future investigation aims must be the determination of the forcing functions, or driving forces, to which the unit will be exposed, and how to reproduce them in the laboratory in context. This method provides a means of finding the response of the given design. For example, at present, a maximum storage temperature of 165°F is widely used. Instead of simply specifying a temperature, a rate of heat flow into the given item (forcing function) should also be specified. Then the test, which is to "duplicate" reality, will be more meaningful. If a small unit is exposed to a temperature of 165°F in an oven, it may require a heat rate of 130 BTU/ft^2/hr to reach and maintain temperature. However, a large air-launched unit weighing 250 pounds or more may require 400 or 450 BTU/ft^2/hr to reach and maintain the exposure temperature of 165°F in the same type oven. Since the two oven exposures are intended to simulate identical storage conditions, it can be seen that something is not correct. If, instead of specifying the response of a given unit to the heat rate of the sun and air, the equivalent heat rate and soak temperature (forcing function) was specified, a more realistic simulation would be obtained.

STOCKPILE-TO-TARGET SEQUENCE

This section presents a method for determining the use life of an air-launched rocket motor and consists of graphically outlining the probable life of an air-launched unit. It can be seen in Fig. 2 that no matter what the air-launched ordnance item is, that during its life span, it will follow the events as depicted in the diagram.

In general, the sequence starts at the component manufacturer level. It can be assumed that the components will be built in the manufacturing centers of industrialized nations of the world. Therefore, the components will be shipped from the manufacturer to assembly depot by only four different modes of transportation: truck, rail, ship, or air.

The assembly depot can be assumed to be located in a manufacturing complex, or if in a remote location, it will have the equivalent facilities of a modern manufacturing complex. All subcomponent storage will be in some type of covered area, either above ground storehouses or earth covered igloos. Therefore, the component will be protected from the adverse effects of exposure to the weather. On assembly, the units will be packaged and palletized for delivery to the fleet. If manufactured in the United States, the unit is then shipped via truck, rail, or air to one of the established Naval Ammunition Depots (NAD), situated within the continental boundaries. Once at the ammunition depot, the unit will be placed in a standard "Explosive Hazard Magazine" as per instructions delineated in NavWeps OP-5, Volume I. Again, there will be no outside

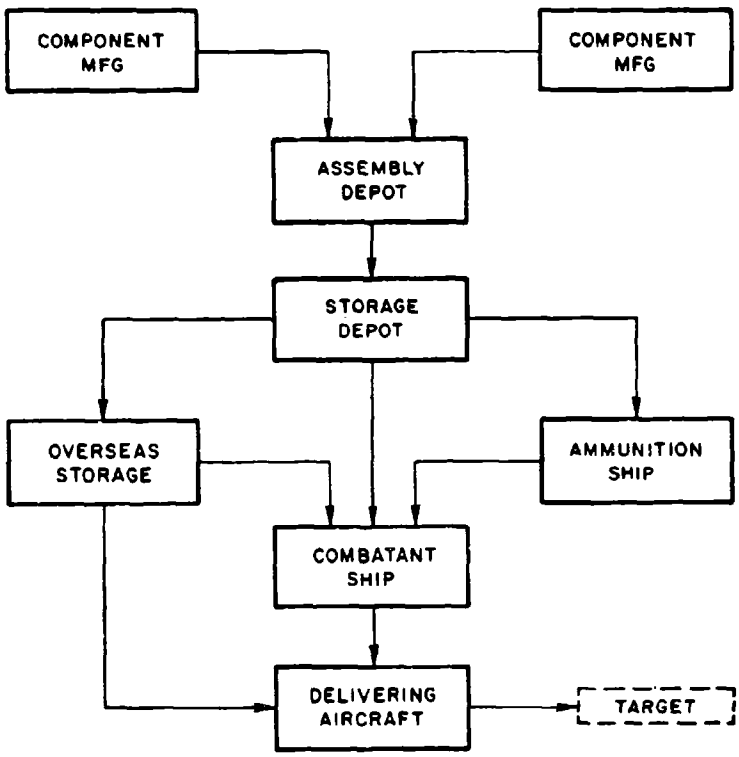

FIG. 2. Stockpile-to-Target Sequence

storage and a very small chance of storage in above ground storehouse facilities.

From the Continental United States storage depot, the item will be sent to either (1) an aircraft carrier, (2) overseas for storage or use, or (3) stored on board an ammunition ship. In the vast preponderence of situations, the unit will be transported via ship to a forward area or loaded on board an aircraft carrier for a tour of duty. During wartime, the use of civilian merchant ships is a good probability. Therefore, the use of non-Naval ships and the inherent chance of cargo mishandling must be recognized. Once at a forward storage area, three storage modes are possible: (1) igloo storage, (2) above ground storehouse or primitive covered storage, and (3) primitive dump storage. It has been observed even during the first hectic days of the Viet Nam emergency that at the forward storage depots, the air-launched rocket motors and components received preferential treatment. Where there were storage igloos, the bombs, gun ammunition, ballistic rockets and some pyrotechnics were dump-stored to provide room for the more sophisticated air-launched guided missile components. This is only an indication, but a strong one, that the air-launched rocket will, whenever possible, receive preferential treatment. However, it was also observed that the Marine Air Wings were forced to dump-store even air-launched rocket components at forward airfields. Following investigations disclosed that even as Butler type huts became available, the air-launched guided weapons were given preferential treatment. The forward storage situation is the most severe portion of the stockpile-to-target sequence that a weapon can be expected to experience.

Another flow sequence (Fig. 2) shows the unit being loaded onto an ammunition ship for at-sea-transfer to an aircraft carrier. This operation has become increasingly popular in the limited war situation where the aircraft carrier is used more as a Naval Air Station than a tactical weapon system as in World War II.

The land counterpart of the aircraft carrier is the Marine Corps forward airfield. In a wartime situation, a forward airstrip will be cut from the terrain and any natural hill and valley area used for dump storage of the explosive components. Usually there will be few or no pieces of elaborate handling gear or specialized tools and equipment to transport or service the ordnance.

Since the unit is to be used in both circumstances, it should be designed so it will be usable and function when air-carried from either situation. Therefore, the more stringent environmental considerations of the Marine Corp use should be given recognition. Instead of the "antiseptic" conditions of an aircraft carrier, the unit may sit in the sand, wind, and rain for a period of time before it is manhandled to the "hot line" and installed on the aircraft from which it is later launched.

A study of Fig. 2 will reveal that all variations of paths have not been discussed here. There are many possible combinations of the enumerated stations in the sequence; however, the other combinations would lead to no new environmental criteria that have not already been identified. Therefore, for brevity, they have been omitted.

ENVIRONMENTAL STATE-OF-THE-ART

The present state-of-the-art is summarized in Table 1. A glance will show that there are too many "unknown" entries. Table 2 provides information in these "unknown" areas based on preliminary measurement and observation, or conjecture. The "environments" column of both tables have resulted from an analysis of the forcing functions (Fig. 1). The investigation of the base for environmental criteria should proceed around a matrix derived from Fig. 1 and 2, and Tables 1 and 2. However, if the need is so urgent as to require the use of this type of information, rather than instigating an orderly sequence of measurements, then Table 2 is at least based in part on preliminary measurement. It must be stressed that the foregoing is in no way the substitute for an orderly program of measurement and analyses.

SURVIVAL VERSUS FUNCTION

The overwhelming majority of environmental specifications, weapon specifications, etc. make no note of the difference in probable conditions under which a unit must survive, and those under which it must function. The 15 column headings of Tables 1 and 2 have been derived from Fig. 2 to classify the various types of exposure to which a unit may be exposed. It should be evident that in the situations as stated in the first 14 columns of Tables 1 and 2 the unit must only survive intact so that it will function when called on to do so in column 15. This concept becomes very important when it is noticed that the majority of the extreme values for the listed environments occur in the first 14 columns. The modified set of probable environments as set forth in column 15 are in fact the only set under which the unit must accomplish the design objective. The most important fallout of this concept is its effect on the design and firing temperatures of air-launched rocket motors. The design temperature must include the extremes shown under the dump storage column. However, the unit will not be required to function in a storage dump. Therefore, the firing temperature limits will be much narrower since environmental parameters on the launching aircraft and other modifying situations must be taken into account, all of which tend to modify the storage dump extremes. Also, state-of-the-art usually requires the unit to be packaged for storage and shipment in a container. The unit is installed in this protective shell at least through column 9 of Tables 1 and 2. In columns 10, 12, 13, 14, and 15, the unit will not be protected by the container. This being the case, any developmental environmental testing should reflect this fact.

TABLE 1. Environmental Criteria for Air-L

	Transportation				Storage			
	Truck	Rail	Ship	Air	Igloo	Covered	Dump	
Temp/time (High)	○	○	○	○	100°F for 4 hr	○	○	
Temp/time (Low)	○	○	○	○	30°F for 72 hr	○	○	
Relative Humidity	100% @ -10°F 95% @ +95°F 45% @ 120°F	100% @ -10°F 95% @ +95°F 45% @ 120°F	95% @ 40°F to 95% @ 90°F	100% @ -30°F to 50% @ 110°F	100% @ 0°F 95% @ +95°F 50% @ 100°F	100% @ -10°F 95% @ +95°F 45% @ 120°F	100% @ -20°F 95% @ +95°F 28% @ 140°F	
Rain	2 in/hr for 1 hr	None	• • •	• • •	None	Negligible	2 in/hr for 2 hr	2
Ice and Hail	1 in/hr 2 in buildup	None	• • •	• • •	None	Negligible	1 in/hr for 1 hr	
Snow	10 in/hr for 1 hr	None	• • •	• • •	None	Negligible	10 in/hr for 1 hr	
Corrosive Atmosphere	○	○	○	○	○	○	○	
Sand and Dust	○	○	• • •	• • •	○	○	○	
Shock	*3.5 g for 25-50 m/sec Sawtooth wave	*25 g for 11-18 m/sec Sawtooth wave	*MIL-STD-901C values	Negligible	• • •	• • •	• • •	*
Drop No damage	1 ft to dirt	1 ft to rock	5 ft to bottom of hold	1 ft to concrete	1 ft to concrete	1 ft to concrete	2 ft to dirt	
Vibration	± g for 1-60 cps	±2g-10/60 cps ±5g-60/500 cps	±0.4g @ 5-55 cps	±3g @ 20-500 cps	• • •	• • •	• • •	
R. F. Radiation Hazard	○	○	○	○	○	○	○	

* Accepted but Unverified ○ No Accepted Data Available • • • Not A

A

	At-Sea Transfer	Airfield		Aircraft carrier		Aboard aircraft		Launch to Target
		Storage	Handling	Stowage	Handling	Jet	Propeller	
	100°F for 8 hr	○	○	○	○	○	○	○
	30°F for 24 hr	○	○	○	○	○	○	○
°F 5°F 0°F	100% @ 30°F to 20% @ 100°F	○	○	○	100% @ 40°F to 50% @ 110°F	○	○	○
hr	2 in/hr for 2 hr	○	○	• • •	• • •	○	○	○
hr	None	○	○	• • •	None	○	○	○
1 hr	None	○	○	• • •	None	○	○	○
	○	○	○	○	○	○	○	○
	• • •	○	○	• • •	• • •	○	○	○
	*15 ft per sec to steel	○	○	○	○	○	○	○
	2 ft to steel	○	○	○	2 ft to steel	• • •	• • •	○
	Negligible	○	○	○	• • •	○	○	○
	○	○	○	• • •	○	○	○	○

Not Applicable

TABLE 2. Preliminary Assumed Environmental Criteria

	Transportation				Storage			T
	Truck	Rail	Ship	Air	Igloo	Covered	Dump	
Temp/time (High)	120°F for 3 hr	120°F for 2 hr	90°F for 16 hr	110°F for 4 hr	100°F for 4 hr	120°F for 4 hr	140°F for 2 hr	100
Temp/time (Low)	-10°F for 36 hr	-10°F for 36 hr	40°F for 24 hr	-30°F for 4 hr	0°F for 72 hr	-10°F for 72 hr	-20°F for 72 hr	30°
Relative Humidity	100% @ -10°F 95% @ 95°F 45% @ 120°F	100% @ -10°F 95% @ 95°F 45% @ 120°F	95% @ 40°F to 95% @ 90°F	100% @ -30°F to 50% @ 110°F	100% @ 0°F 95% @ 95°F 50% @ 100°F	100% @ -10°F 95% @ 95°F 45% @ 120°F	100% @ -20°F 95% @ 95°F 28% @ 140°F	100 20
Rain	2 in/hr for 1 hr	None	DNA	DNA	DNA	Negligible	2 in/hr for 2 hr	2 in/
Ice and Hail	1 in/hr 2" buildup	None	DNA	DNA	DNA	Negligible	1 in/hr for 1 hr	
Snow	10 in/hr for 1 hr	None	DNA	DNA	DNA	Negligible	10 in/hr for 2 hr	
Corrosive Atmosphere	Negligible	Negligible	Negligible	Negligible	1/4 in. of H. R. S. per year	1/4 in. of H. R. S. per year	1/4 in. of H. R. S. per year	Ne
Sand and Dust	45 knot wind .001 to .062 in dia partical size	Negligible	DNA	DNA	Negligible	45 MPH wind .001 to .125 in dia partical size	45 MPH wind .001 to .125 in dia partical size	
Shock	3.5 g for 25-50 m/sec	25 g for 11-18 m/sec	MIL-STD-901C values	Negligible	DNA	DNA	DNA	15 ft steel
Drop No damage	1 ft to dirt	1 ft to rock	5 ft to bottom of hold	1 ft to concrete	1 ft to concrete	1 ft to concrete	2 ft to dirt	2 ft to
Vibration	±1 g @ 1-60 cps	±2 g @ 10-60 cps ±5 g @ 60-500 cps	±0.4 g @ 5-55 cps	±3 g @ 20-500 cps	DNA	DNA	DNA	Neg
R. F. Radiation Hazard	Less than 1 V/M	Less than 1 V/M	Less than 1 V/M	1 to 2 V/M	Less than 1 V/M	Less than 1 V/M	Less than 1 V/M	Less th
	← Unit is palletized and in container							
	← Unit must survive but f							

A

iteria for Air-Launched Tactical Propulsion Systems.

	At-Sea Transfer	Airfield		Aircraft carrier		Aboard aircraft		Launch to Target
		Storage	Handling	Stowage	Handling	Jet	Propeller	
	100°F for 8 hr	140°F for 2 hr	140°F for 2 hr	90°F for 16 hr	110°F for 2 hr	240°F for 20 min to 120°F for 2 hr	110°F for 2 hr	up to 400°F for 30 sec
r	30°F for 24 hr	-20°F for 72 hr	-20°F for 72 hr	40°F for 72 hr	40°F for 72 hr	-25°F for 2 hr	-30°F for 2 hr	-25°F for 30 sec
	100% @ 30°F to 20% @ 100°F	100% @ -20°F 95% @ 95°F 28% @ 140°F	100% @ -20°F 95% @ 95°F 28% @ 140°F	100% @ 40°F to 95% @ 90°F	100% @ 40°F to 50% @ 110°F	100% @ 40°F to 95% @ 90°F	100% @ 40°F to 95% @ 90°F	DNA
	2 in/hr for 2 hr	2 in/hr for 2 hr	2 in/hr for 2 hr	DNA	2 in/hr for 2 hr	0.5 in/hr	0.5 in/hr	0.5 in/hr
	None	1 in/hr for 1 hr	1 in/hr for 1 hr	DNA	None	None	0.5 in/hr	None
r	None	10 in/hr for 2 hr	10 in/hr for 2 hr	DNA	None	3 in/hr	3 in/hr	3 in/hr
S.	Negligible	1/4 in. of H. R. S. per year	Negligible	1/8 in. of H. R. S. per year	Negligible	Negligible	1/8 in. of H. R. S. per year	Negligible
	N. A.	45 MPH wind .001 to .125 in dia partical size	45 MPH wind .001 to .125 in dia partical size	DNA	DNA	.001 to .125 in dia partical size 100 knot Rel. Vel.	.001 to .125 in dia partical size 100 knot Rel. Vel.	DNA
	15 ft per sec to steel	DNA	15 g for 11-18 m/sec	MIL-STD-901C values	15 g for 11-18 m sec	35 g for 5-15 m/sec	35 g for 5-15 m/sec	Detent 20 g for 30 m/sec Ejection 30 g for 5 m/sec
	2 ft to steel	2 ft to dirt	2 ft to concrete	2 ft to steel	2 ft to steel	DNA	DNA	DNA
	Negligible	DNA	None	±0.4 g @ 5-55 cps	None	.0125 g^2/cps 2-2,000 cps	±5 g @ 2-500 cps	Dependent on system
	Less than 1 V/M	100 V/M	100 V/M	None	up to 300 V/M	up to 300 V/M	up to 300 V/M	10 V/M

vive but function not required → Satisfactory Function Required

UNIT LIFE

The life of any air-launched unit will not be comprised of equal parts of the situations as presented in the columns of Tables 1 or 2. A rough approximation of the breakdown of the life expectancy would be as follows:

	% of lifetime
Igloo or covered storage	85
Transportation	5
Ammunition and combatant ship	5
Dump storage	3
Air-carried	1

Although these values are approximations, the fact remains that the vast majority of the life cycle of any air-launched unit can be expected to be storage. Therefore, any investigation of the environment of an air-launched item should be primarily concerned with the definition of storage parameters. The extreme criterion must be placed in a statistical context so that the assumption is not made that just because a given extreme has been measured, it is a common occurrence. Conversely the statistical context may determine that the extreme situation may be in fact a very common occurrence. Until the extremes are measured and placed in statistical context, there will continue to be the same lack of knowledge on which to base critical environmental design decisions that exists today.

ASSUMED, PROJECTED ENVIRONMENTAL CRITERIA

Since all the theoretical discussions of environmental limits, without valid criteria, are of no use to the practical designer, tentative criteria will be presented in this section. The only justification for this section at this time is that someone, somewhere in the Navy system, must assume the responsibility for temporarily filling the information gap. When the environmentalist, who is closest to the problem, answers a truthful, "I don't know" to a specific environmental question, then the specification writer, who is far removed from the field, must make the decision. It must be stringently stipulated that the author "does not know" when filling in the unknowns of Table 1 to derive Table 2. Table 2 reflects mainly educated guesses. If time limitations and money require this type of information, Table 2 is at least the author's best projections for air-launched rocket motors.

Since Table 2 reflects a generalized set of "best estimate" information, a given air-launched system should refine the "best guesses" within the given system and launch method. Needless to say, the parameters of combatant ship handling, storage, and method of launch will have a marked effect on the environmental criterion as set down in the right-hand columns of Table 2. Given a specific system, more specific answers are possible.

The publishing of Table 2 in no way suggests that more work is not needed to make the data presented therein more realistic. In the critical function areas of temperature and humidity, shock and vibration, investigation at best is not even beyond the primitive stage. (A thorough search of published and nonpublished data was made in order to find any authentic and valid information available. The Appendix, Part 3, presents the details of a literature search which proved to be extremely disappointing.) For example, those data that exist on temperature are, for the majority of cases, single measurements or measurement series. There has been no attempt to place the temperature work in a logical matrix or even state when, in the solar cycle, the exposure was accomplished. The science of statistics has not been used on the criteria determinations. The "one-shot" measurements of the past and present do not produce enough suitable data points so that the rules of probability can be applied. For example, a maximum dump storage temperature of 140°F is given in Table 2. There is a theoretical time of exposure limitation of three hours (maximum taken from actual recorded times), but nowhere is there a "probability of occurrence". The question remains: "Is this criterion reached daily, yearly, monthly, or only once every ten years?". For a designer, the question is far from academic. The most direct way the Navy can answer the question is to provide measurements for a significant portion of a "solar cycle" to the statistician so that he can then apply the laws of probability, thus giving the designer a probability of occurrence.

REPORT USES

The information displayed in Tables 1 and 2 indicates that there are 15 stockpile-to-target situations derived from Fig. 1 and 2 wherein the unit may be subjected to the 12 different chosen environments. Part 2 of this report classifies these variables under individual topics where the environmental expectancies are discussed as relevant to the particular area in question. For example, the chapter on truck transport gives information that is applicable to environmental conditions to be expected wherever truck transport is a probability.

Part 3 is a more detailed presentation of each of the environments treated herein. It is not designed to be an all inclusive textbook on each environment, but rather a refresher for the engineer or manager. In general, Part 3 will define the environment so that the author and reader have a common basis for discussion.

An effort has been made to keep the relationship between the various criteria in context. This method of subject treatment has been used so that in any testing involving two or more environments, the corresponding related criterion can be used. In the past, the maximum criterion for any type of environment was specified either separately or in conjunction with other maximum criterion. This has caused, for example, ordnance to be subjected to a combination of maximum dry summer temperature extremes and maximum tropical relative humidities as a combined test.

The numbers that are listed in either Tables 1 or 2 do not necessarily reflect values that a project manager will want to assign to a given air-launched weapon system. The values presented are as close to reality as the author can in good faith project. The project manager may, however, want to add a factor of uncertainty to any of the values provided. The function of this report is to indicate the level of exposure that should be non-negotiable. If the designer or manufacturer cannot meet the non-negotiable specification, he must conduct an investigation to define the compromise in performance if a waiver is granted. A comparison of the completeness of Tables 1 and 2 will indicate that the majority of environments need immediate work to determine the true non-negotiable values.

PROJECTED USE

The information displayed in Tables 1 and 2 can be used as a starting point for the compilation of a specific weapon system's criteria determination. If for example, a weapon is to be designed only for use in a given theater of operation, (i.e., Southeast Asia or the Arctic), then the extremes listed in the tables are no longer necessarily the best values. The extremes in some cases can be narrowed, thus saving time and money in design. In general, the information contained in Table 2, columns 1 through 4 will not change. The storage information in columns 5, 6, and 7 may need revision. The basic revision will be most evident in the information in columns 9 through 15.

Appendix

SUPPLEMENTARY DOCUMENTARY READING

1. U. S. Naval Ordnance Test Station. Environmental Criteria Determination for Pyrotechnics, by Howard C. Schafer, China Lake, California, NOTS, April 1967. (NOTS TP 4254.)

2. Environmental Protection Division, Quartermaster Research and Engineering Command, Yuma Analogs, Numbers 1 through 10. Natick, Mass.

3. U. S. Army Tropic Test Center, Monthly Report of Projects and Special Activities, Fort Clayton, Canal Zone, Panama. U. S. Army Test and Evaluation Command (RCS-STETC-101).

4. Office of the Assistant Secretary of Defense (Research and Development). Fundamentals of Guided Missile Packaging, by Elias Klein. Washington, D. C., GOP, July 1955. (ASTIA No. 1.210000.)

5. Department of Defense. Proceedings of Shock and Vibration Symposium. Washington, D. C., U. S. Naval Research Laboratory, 3-5 December 1963.

6. U. S. Department of the Navy. An Analysis of Temperature Environments of Surface Launched Navy Rocket Motors. Washington, D. C., BuWeps, 28 January 1963. (RMMP-321/WDR.)

7. Environmental Protection Division, Quartermaster Research and Development Center. Occurrence of High Temperatures in Standing Boxcars, by W. L. Porter. Natick, Mass., U. S. Army Natick Laboratories, February 1956. (Report EP-27.)

8. Aeronautical Systems Division, Air Force Systems Command. Flight Vibration Survey of C-133 Aircraft, by Phyllis G. [illegible]. ASTIA, Arlington Hall Station, Arlington, Virginia, April [illegible]. (ASD-62-383.)

9. Environmental Protection Division, Quartermaster Research and Development Center. Climatic Extremes for Military Equipment, by Norman Sissenwine. Natick, Mass., U. S. Army Natick Laboratories, November 1951. (Report No. 146.)

10. Department of the Navy. U. S. Navy Marine Climatic Atlas of the World. Washington, D. C., Chief of Naval Operations, 1 November 1959. Vol. I-V.

11. U. S. Navy Bureau of Ordnance. Ammunition Ashore, Handling, Stowing and Shipping, NavWeps OP-5 (Vol. 1) 2nd Revision.

12. U. S. Naval Ordnance Test Station. Storage Temperature of Explosive Hazard Magazines, Part 1, American Desert, by I. S. Kurotori and H. Schafer. China Lake, California, NOTS, November 1966. (NOTS TP 4143.)

13. -----. Storage Temperature of Explosive Hazard Magazines, Part 2, Western Pacific, by I. S. Kurotori and H. Schafer. China Lake, California, NOTS, June 1967. (NOTS TP 4143.)

14. -----. Storage Temperature of Explosive Hazard Magazines, Part 3, Okinawa and Japan, by I. S. Kurotori and H. Schafer. China Lake, California, NOTS, June 1967. (NOTS TP 4143.)

15. Environmental Protection Division, Quartermaster Research and Development Center. Occurrence of High Temperatures in Yuma Storage Dump, by W. L. Porter. Natick, Mass., U. S. Army Natick Laboratories, February 1956. (Report EP-121.)

16. U. S. Department of Commerce. Climatological Data, National Summary. Washington, D. C., Weather Bureau.

17. Department of the Navy. Replenishment at Sea. Washington, D. C., Office of Chief of Naval Operations. (NWP-38A.)

18. Kent, J. L. Ships in Rough Water. New York, Thomas Nelson & Sons, Ltd., 1958.

19. May, T. P. Corrosion Testing in Marine Atmospheres. Journal of Environmental Sciences, Mt. Prospect, Ill., December 1964, Vol. 7, No. 7, pp. 23-27.

20. Environmental Protection Division, Quartermaster Research and Development Center. Atlas of Arctic Environment, by Andrew D. Hastings. Natick, Mass., U. S. Army Natick Laboratories, March 1961. (Research Study Report RER-33.)

UNCLASSIFIED
Security Classification

DOCUMENT CONTROL DATA - R & D

(Security classification of title, body of abstract and indexing annotation must be entered when the overall report is classified)

1. ORIGINATING ACTIVITY (Corporate author) Naval Weapons Center China Lake, California 93555	2a. REPORT SECURITY CLASSIFICATION UNCLASSIFIED 2b. GROUP

3. REPORT TITLE
Environmental Criteria Determination for Air-Launched Tactical Propulsion Systems. Part 1. Stockpile-to-Target Sequence

4. DESCRIPTIVE NOTES (Type of report and inclusive dates)
Stockpile-to-target environmental conditions

5. AUTHOR(S) (First name, middle initial, last name)
Howard C. Schafer

6. REPORT DATE July 1968	7a. TOTAL NO. OF PAGES 28	7b. NO. OF REFS none
8a. CONTRACT OR GRANT NO. b. PROJECT NO A33-536-711/216-1/F009-06-02 c. d.	9a. ORIGINATOR'S REPORT NUMBER(S) NWC TP 4464, Part 1 9b. OTHER REPORT NO(S) (Any other numbers that may be assigned this report)	

10. DISTRIBUTION STATEMENT
This document is subject to special export controls and each transmittal to foreign governments or foreign nationals may be made only with prior approval of the Naval Weapons Center.

11. SUPPLEMENTARY NOTES	12. SPONSORING MILITARY ACTIVITY Naval Air Systems Command Naval Material Command Washington, D. C. 20360

13. ABSTRACT
Part 1 discusses the stockpile-to-target sequence for air-launched tactical propulsion systems and gives environmental limitations, where known. Assumptions or projections are included in the unknown areas, based upon the author's best estimate. Those areas of environmental criteria where investigation must be conducted are discussed in Part 2.

DD FORM 1 NOV 65 1473 (PAGE 1)
S/N 0101-807-6801

UNCLASSIFIED
Security Classification

UNCLASSIFIED
Security Classification

14 KEY WORDS	LINK A ROLE	LINK A WT	LINK B ROLE	LINK B WT	LINK C ROLE	LINK C WT
Environment						
Environmental criteria						
Temperature						
Relative humidity						
Precipitation						
Corrosive Atmosphere						
Sand and dust						
Shock						
Drop, no damage						
Vibration						
Radio frequency (RF) radiation hazard						
Environmental philosophy						
Stockpile-to-target sequence						

DD FORM 1 NOV 65 1473 (BACK)
(PAGE 2)

UNCLASSIFIED
Security Classification