UNCLASSIFIED

AD NUMBER

AD840998

NEW LIMITATION CHANGE

TO

Approved for public release, distribution unlimited

FROM

Distribution authorized to U.S. Gov't. agencies only; Administrative/Operational Use; 12 Jul 1968. Other requests shall be referred to the Department of Defense, Attn: Public Affairs Office, Washington, DC 20301.

AUTHORITY

BOEING CO ltr, 15 Apr 1977

THIS PAGE IS UNCLASSIFIED

AD840998

BOEING

REPORT D2-[illegible]

TITLE [illegible]

STATEMENT #3 UNCLASSIFIED

Each transmittal of this document outside the agencies of the U.S. Government must have prior approval of ~~The Boeing~~ Company, Seattle, Washington.

DDC
RECEIVED
OCT 21 1968
C

SEATTLE, WASHINGTON

DISCLAIMER NOTICE

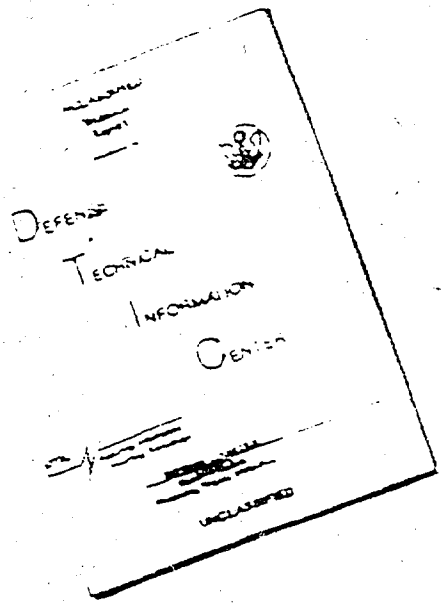

THIS DOCUMENT IS BEST QUALITY AVAILABLE. THE COPY FURNISHED TO DTIC CONTAINED A SIGNIFICANT NUMBER OF PAGES WHICH DO NOT REPRODUCE LEGIBLY.

REPRODUCED FROM
BEST AVAILABLE COPY

REV LTR A

THE BOEING COMPANY

CODE IDENT. NO. 81205

NUMBER D2-125911-1

TITLE: A COMPENDIUM OF STRUCTURAL JOINTS FOR ASSEMBLY, FIELD AND FLIGHT SEPARATION ON MISSILES

ORIGINAL RELEASE DATE _____. FOR THE RELEASE DATE OF SUBSEQUENT REVISIONS, SEE THE REVISIONS SHEET. FOR LIMITATIONS IMPOSED ON THE DISTRIBUTION AND USE OF INFORMATION CONTAINED IN THIS DOCUMENT, SEE THE LIMITATIONS SHEET.

MODEL _____ CONTRACT _____

ISSUE NO. _____ ISSUED TO _____

OFFICIAL RELEASE DATE

ISSUING ORGANIZATION: DEVELOPMENT DESIGN, 2-5166

PREPARED BY R. V. Gambrell

SUPERVISED BY W. R. L. Clark

APPROVED BY J. B. Concannon 7/5/68

APPROVED BY _____

SHEET 1 13

US 4802 1430 REV 10 67

USE FOR TYPEWRITTEN MATERIAL ONLY

ABSTRACT

This report is a Class II Research document which contains information to assist the preliminary and conceptual design engineer in selecting and designing a variety of missile joints, including:

Payload Stage Assembly and Separation Joints

Booster Stage Assembly and Separation Joints

Missile Carrier Interface Joints

In addition, information on design considerations and system requirements are included to assist the engineer in making his concept choice and justifying its applicability and feasibility.

KEY WORDS

Missile Joints
Primary Structure
Booster Staging
Assembly
Joint Seals
Model Vehicles
AGM
Shim Joints
Payload Separation
Ascent Cover
Fabrication
Motor Cases
Fiberglass
Minuteman
Saturn

CONTRIBUTORS

W. Fukuyama
W. Hoke
R. Thompson
W. Gouge
W. B. Martin
H. L. Gross
R. V. Gambrell
J. J. Harbaugh

LIMITATIONS

Initial Release. Document to be distributed to the Defense Documentation Center (DDC). Each transmittal of this document outside the agencies of the U. S. Government must have prior approval of The Boeing Company.

This document is controlled by Development Design, Org. 2-5166

All revisions to this document shall be approved by the above noted organization prior to release.

USE FOR TYPEWRITTEN MATERIAL ONLY

TABLE OF CONTENTS

PARAGRAPH	PAGE
TITLE PAGE	1
ABSTRACT AND KEY WORDS	2
LIMITATIONS	3
TABLE OF CONTENTS	4
1.0 INTRODUCTION	6
2.0 PAYLOAD STAGE JOINTS	7
2.1 ASSEMBLY JOINTS	7
2.1.1 PAYLOAD	7
2.1.2 ASCENT COVER	13
2.2 SEPARATION JOINTS	15
2.2.1 PAYLOAD	15
2.2.2 ASCENT COVER	20
3.0 BOOSTER STAGE JOINTS	25
3.1 ASSEMBLY JOINTS	25
3.1.1 INTERSTAGE OR BOOSTER ADAPTERS	25
3.1.2 MID-BODY OR MID-INTERSTAGE RINGS	32
3.2 SEPARATION JOINTS	36
3.2.1 STAGING RINGS	36
3.2.2 LONGITUDINAL JOINTS	42
3.3 CONCEPT VARIATIONS	45
4.0 SMALL MISSILE JOINTS	59
4.1 AGM-69A JOINT DESIGN	59
4.2 SELECTED SMALL MISSILE JOINTS	81
4.3 THE JOINT SELECTION PROCESS	83
4.4 A CONCEPTUAL MISSILE JOINT	86

U.S. 4802 (436 REV. 8-65

TABLE OF CONTENTS (Cont'd)

PARAGRAPH		PAGE
5.0	DESIGN CONSIDERATIONS	91
5.1	ORDNANCE SEPARATION	91
5.1.1	TYPICAL ORDNANCE TRAIN	91
5.1.2	TYPICAL ORDNANCE COMPONENTS	95
5.2	JOINT TRADES EXERCISE	103
5.3	SEALING JOINTS	111
6.0	JOINT DESIGN FOR LARGE SEGMENTED, FILAMENT WOUND MOTORCASES	113
6.1	MOTORCASE CONCEPTS CONSIDERED	113
6.2	RECENT STATE-OF-THE-ART DEVELOPMENTS IN SHIM JOINT CONCEPT	122
7.0	JOINT CONSIDERATIONS FOR REDUCED SCALE MODEL VEHICLES	153
8.0	DOCUMENT OPTION FOR FUTURE WORK	164

USE FOR TYPEWRITTEN MATERIAL ONLY

U S 4802 1434 REV. 8-65

1.0 INTRODUCTION

This document was prepared to compile an abbreviated source of design information useful to the preliminary or conceptual design engineer. The intent is not to present methods with which an engineer can design structural interface joints on missiles, but to assemble in one document, a cross-section of state-of-the-art designs.

It is recognized that a design engineer can arrive at a feasible design of a missile joint with no assistance. However, this takes a certain amount of time depending on the type of joint and its use. The engineer must investigate the loads, environment, cost, etc., or else he must initiate a literature search to see what similar joint has been used successfully in the past. With this document a designer will be able to select a feasible, proven joint design using only gross loads and environment data. This is usually sufficient for preliminary or conceptual design work since loads and environment data are usually estimates at this stage.

The format of the document has been prepared to facilitate this task as much as possible. For each joint a sketch is given with dimensions if possible, the loads to which the joint is designed and the environment to which the joint will be subjected are summarized. Also, a short written description and project use is provided to give information on what type of use the joint might be applicable. Finally references are stated, if available, which will allow the designer to search for additional detail material.

USE FOR TYPEWRITTEN MATERIAL ONLY

U.S. 4802 1434 REV. 8-64

2.0 PAYLOAD STAGE JOINTS

This section covers the variety of structural joints [illegible] (1) attach the payload to the booster, (2) separate the payload from the booster, (3) attach the payload's ascent cover to the payload or booster and (4) separate the ascent cover in flight.

Figure 2-1 schematically shows the typical location of the four types of joints on a payload stage. It should be referred to as a guide to a specific type of joint. It is not intended that a given application require all of the indicated joints or that they be located as shown. For example, certain ascent covers have "over-the-top" removal and hence have no longitudinal separation joint. Or, separation and assembly joints may be integrated into one structural joint. For clarity, all joints are shown here as separate items for reference on Figure 2-1.

2.1 ASSEMBLY JOINTS

These joints serve to provide field attachment of the payload to the booster or the ascent cover to the booster. The joint may or may not be integral with the separation joint. If it is, a cross reference to that particular joint in Section 2. made.

2.1.1 PAYLOAD ASSEMBLY JOINTS

These joints are shown on Figure 2-1 to be located on a "payload adapter," depicted as a frustrum of a cone. This is typical of satellite payloads on space boosters and is generally applicable to cases where the payload has a different diameter than the booster. Where diameters are nominally the same, the payload may be attached directly to the booster and this joint may be quite similar in appearance to booster interstage joints. Both types are shown in this section.

USE FOR TYPEWRITTEN MATERIAL ONLY

U.S. FORM 1494 REV. 2-65

USE FOR DRAWING AND HANDPRINTING — NO TYPEWRITTEN MATERIAL

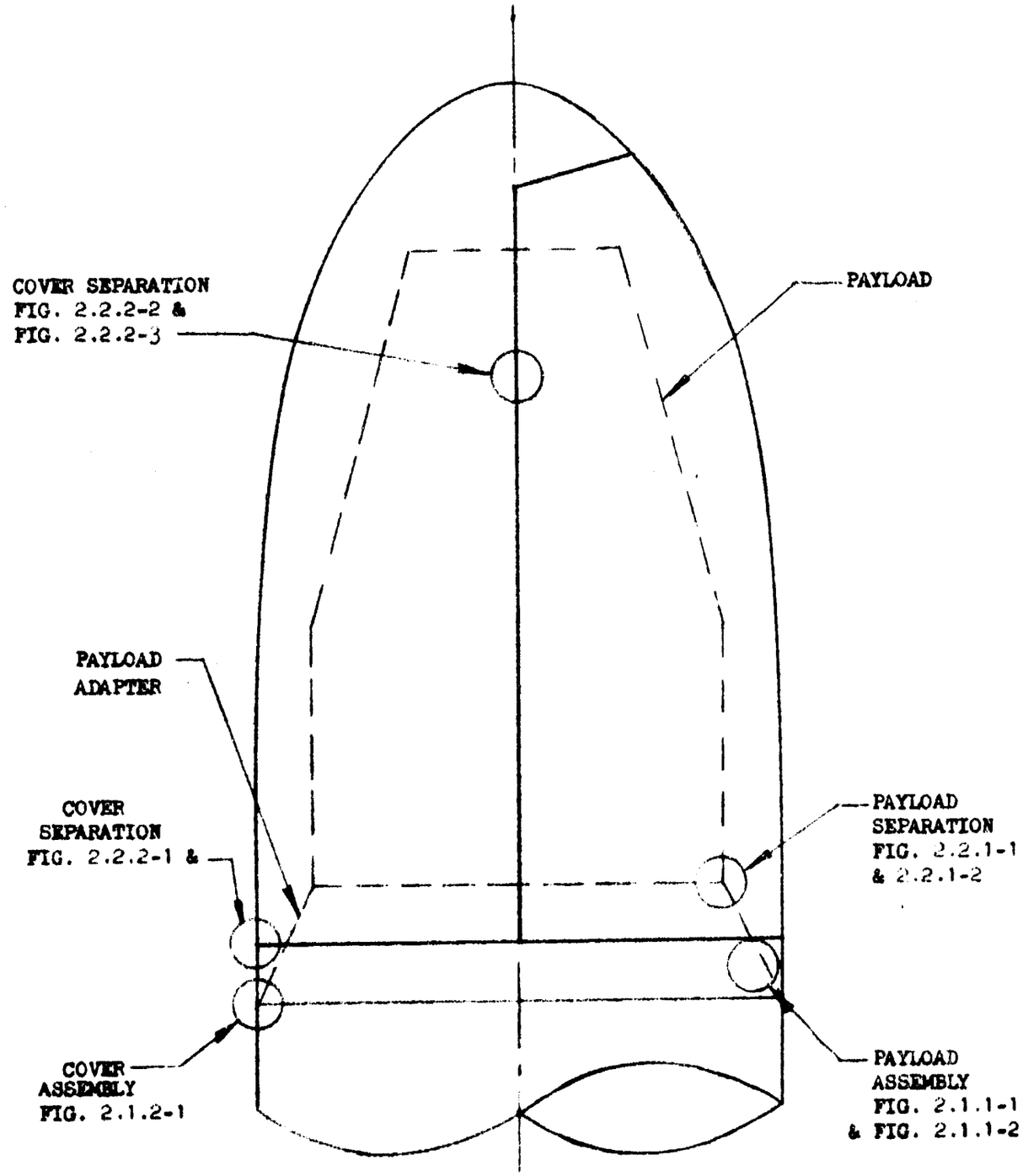

Figure 2-1: PAYLOAD STAGE JOINT INDEX

2.1.1 (Cont'd)

Frequently the post boost vehicle includes multiple instrumentation packages or wafers (Reference Figure 2-2). These may be assembled essentially by repeating the basic lap joint structure as required by the number of packages to be assembled (Reference Figure 2.1.1-2).

2.1.1.1 PAYLOAD ASSEMBLY JOINT (FIG. 2.1.1-1)

The joint shown schematically on Figure 2.1.1-1 serves the dual purpose of assembly and separation. A tension band is fitted over the interface of the butted flanges of the sections to be joined. The band is drawn tight by a turnbuckle arrangement which is also an explosive device. When actuated, the explosive device releases the band, permitting the sections to separate. Similar devices were used on Minuteman and at the separation plane of the Burner II payload. Examples in more detail are shown on Figures 3.3-5 through 3.3-9.

USE FOR TYPEWRITTEN MATERIAL ONLY

U S 4802 1434 F F V . 8 . 65

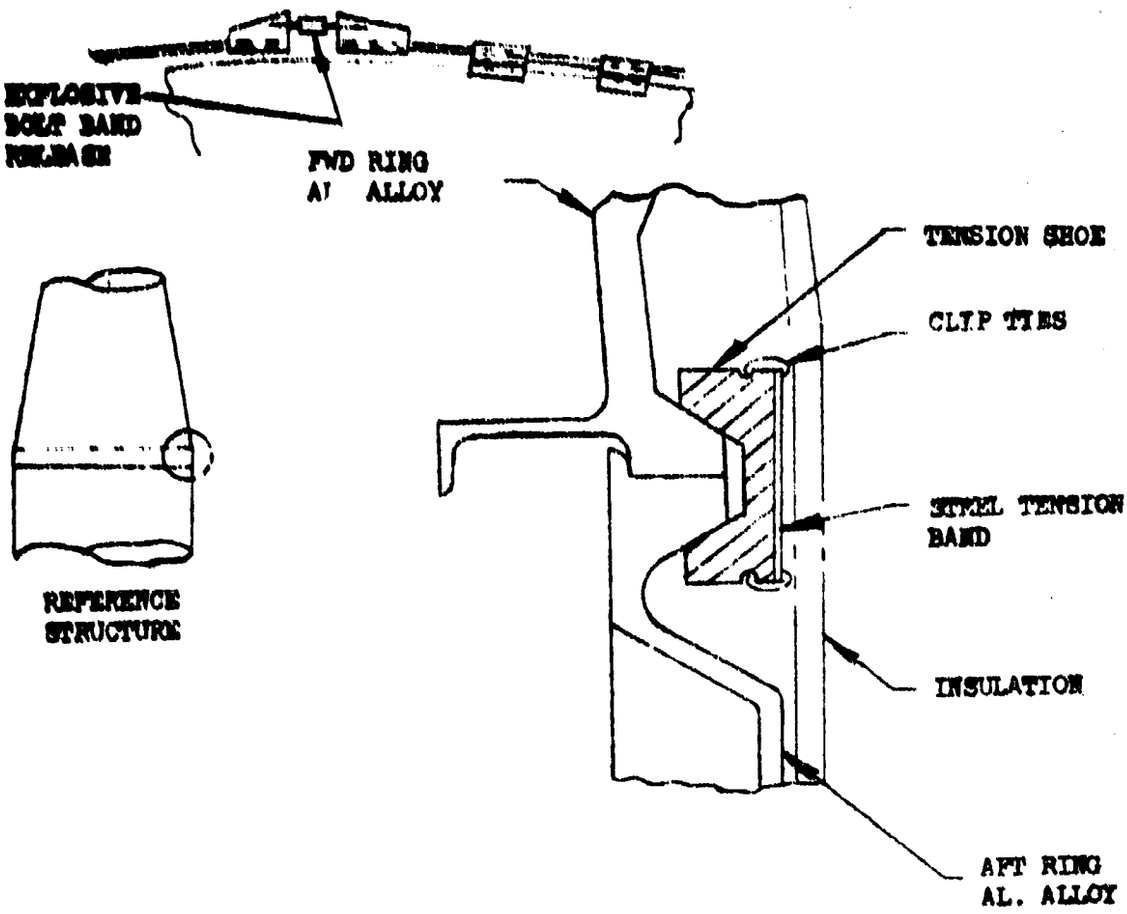

COVER ASSEMBLY JOINT

DESIGN LOAD TO BE ADDED

MATERIAL - ALUMINUM

FIGURE 2.1.1-1

REFERENCE: MINUTEMAN ENGINEERING ICD 25-37645
ICD 25-37647

SEE EXAMPLES IN SECTION 3.3

USE FOR DRAWING AND HANDBOOKING — NO TYPEWRITTEN MATERIAL

LGM 30G OPERATIONAL MISSILE

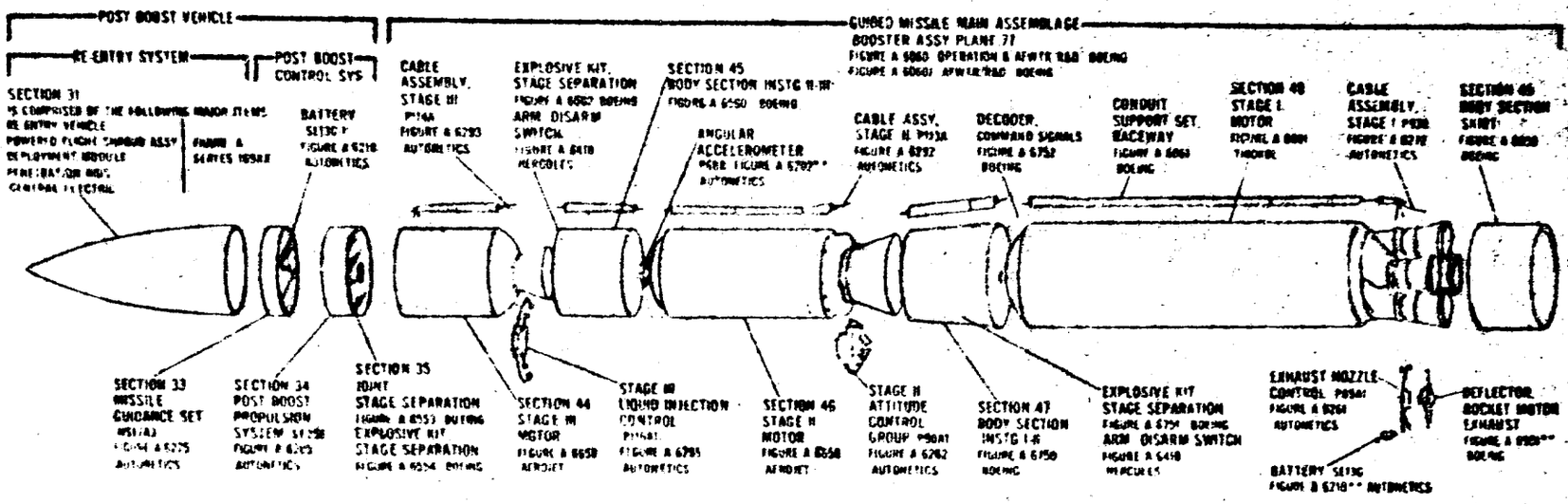

JLGM 30G AFWTR/ETR, (R&D)

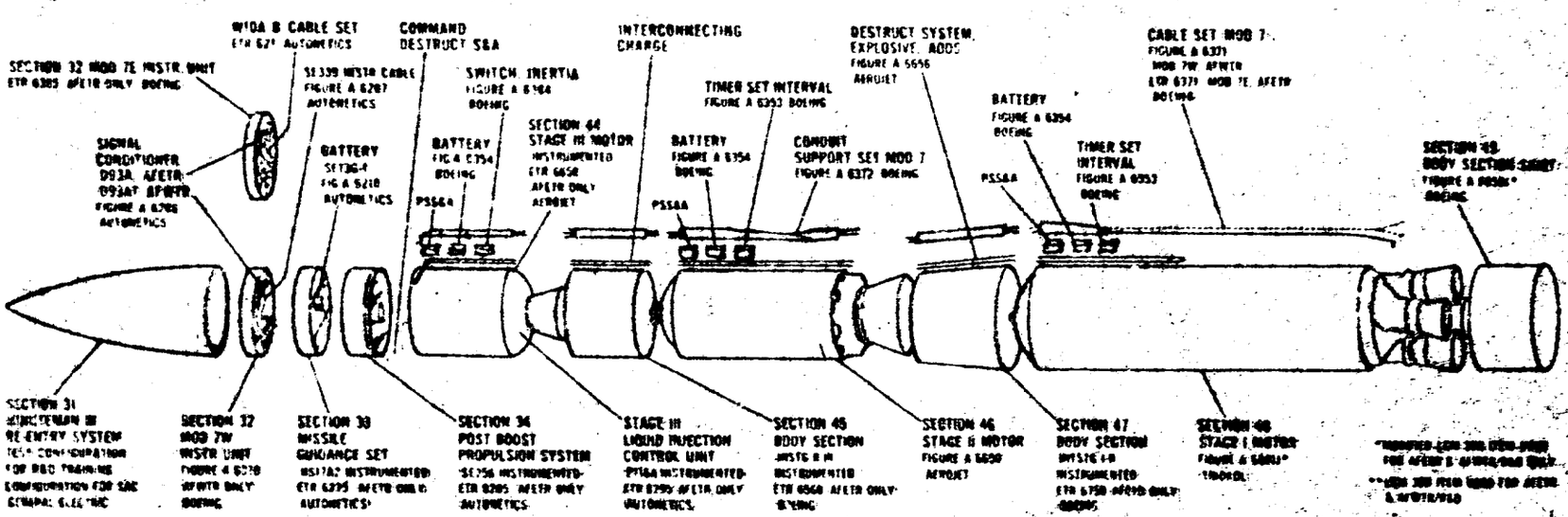

Figure 2-2

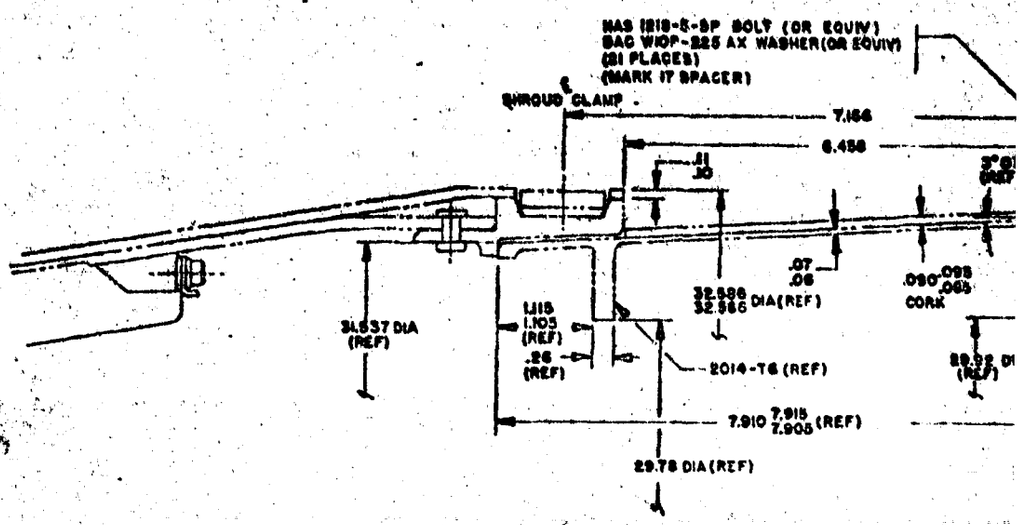
NAS 1218-5-5P BOLT (OR EQUIV)
BAC WOP-225 AX WASHER (OR EQUIV)
(21 PLACES)
(MARK 17 SPACER)
SHROUD CLAMP
7.156
6.456
.11
.10
.07
.06
32.586
32.565 DIA (REF)
.090 .095
.085
CORK
34.537 DIA
(REF)
1.115
1.105
(REF)
.26
(REF)
2014-T6 (REF)
7.910 7.915
7.905 (REF)
29.78 DIA (REF)

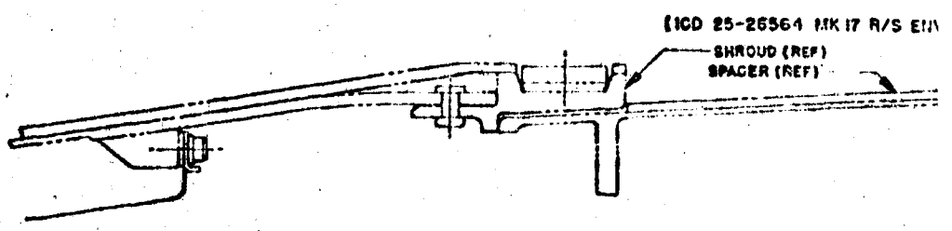
(ICD 25-26564 MK 17 R/S EQ
SHROUD (REF)
SPACER (REF)

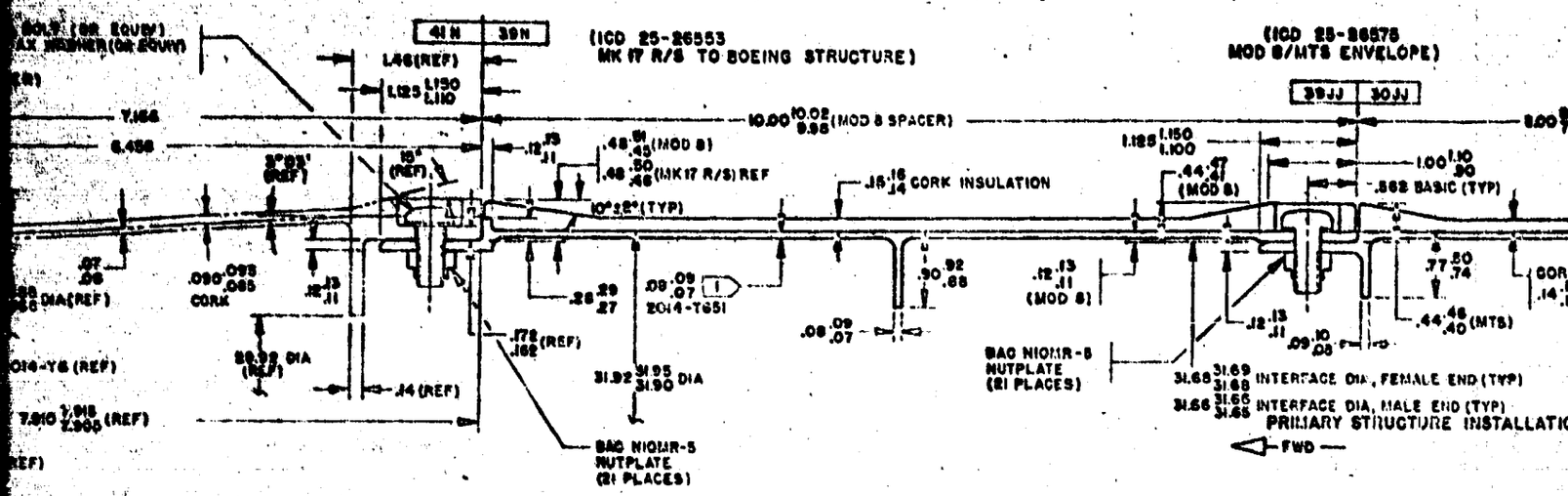

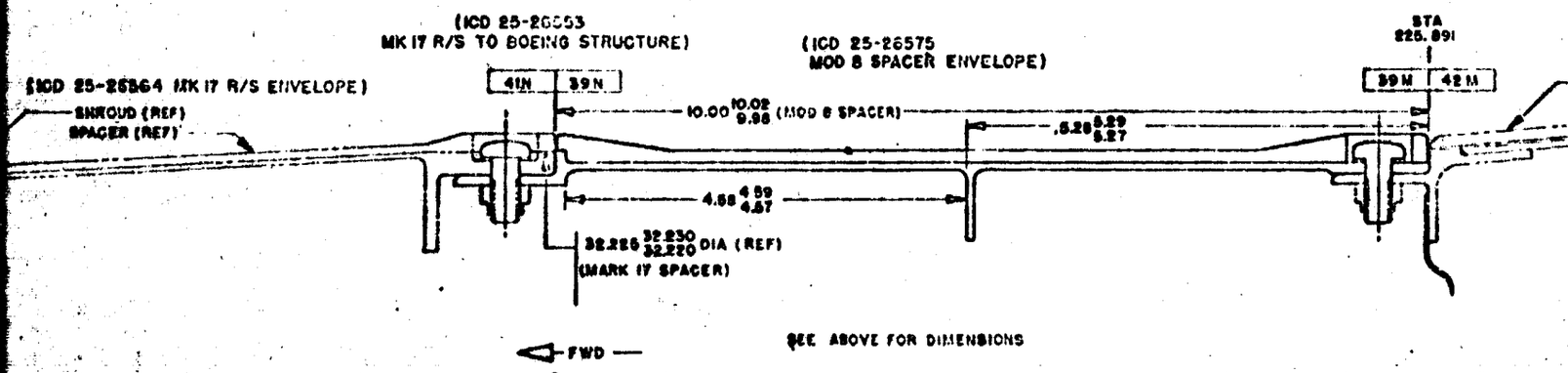

PRIMARY STRUCTURE INSTALLATION - MARK 17 SPACER / MOD 8/NS-17 GBC SECTION

2

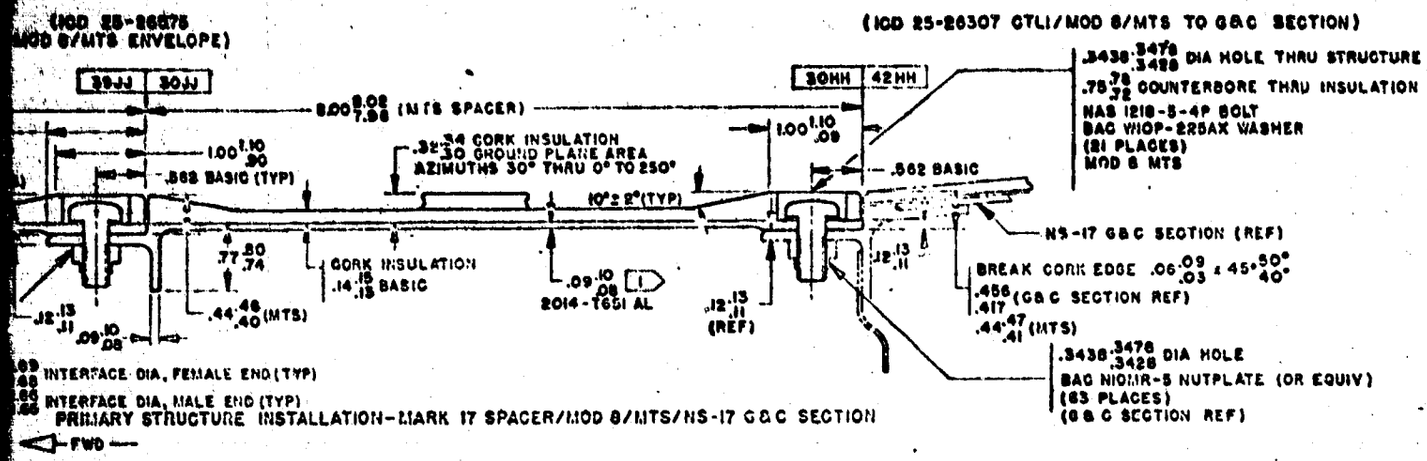

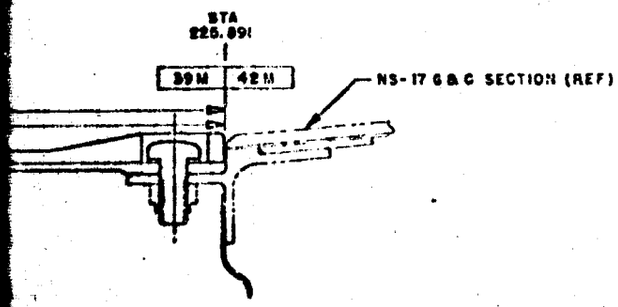

1 BASIC DIMENSION SHOWN. SKIN GAGE IN AREAS OF CUTOUTS IS HEAVIER

FIGURE 2.1.1-2: PRIMARY STRUCTURE - INSTALLATION
MOD 8/MTS INSTRUMENTATION SPACERS
MOD 8-LO-10
12-19-67

2.1.2 ASCENT COVER ASSEMBLY JOINTS

Figure 2-1 locates these joints at the intersection of the booster and payload adapter. Another common location is direct attachment to the payload itself. Others will become apparent as the engineer encounters different applications. The conditions of interest are how much of the payload need be exposed or covered at different phases of the mission, how much protection can be acquired by dual purpose structure (integrating the ascent cover as part of the payloads primary structure), and the desire to discard as much weight as early in the mission as possible. Joints applicable to many situations are covered in this section.

2.1.2.1 COVER (SHROUD) ASSEMBLY JOINT (FIG. 2.1.2-2)

Assembly of an instrumentation package to the shroud is accomplished by this joint in Minuteman III. It uses overlapping rings on the mating sections which are held by the shroud clamp strapped in tension around the outside ring. An ordnance device coupled to a system of cams is fired to release the tension and permit section separation.

USE FOR TYPEWRITTEN MATERIAL ONLY

U.S. ARMY 1434 REV. 8-69

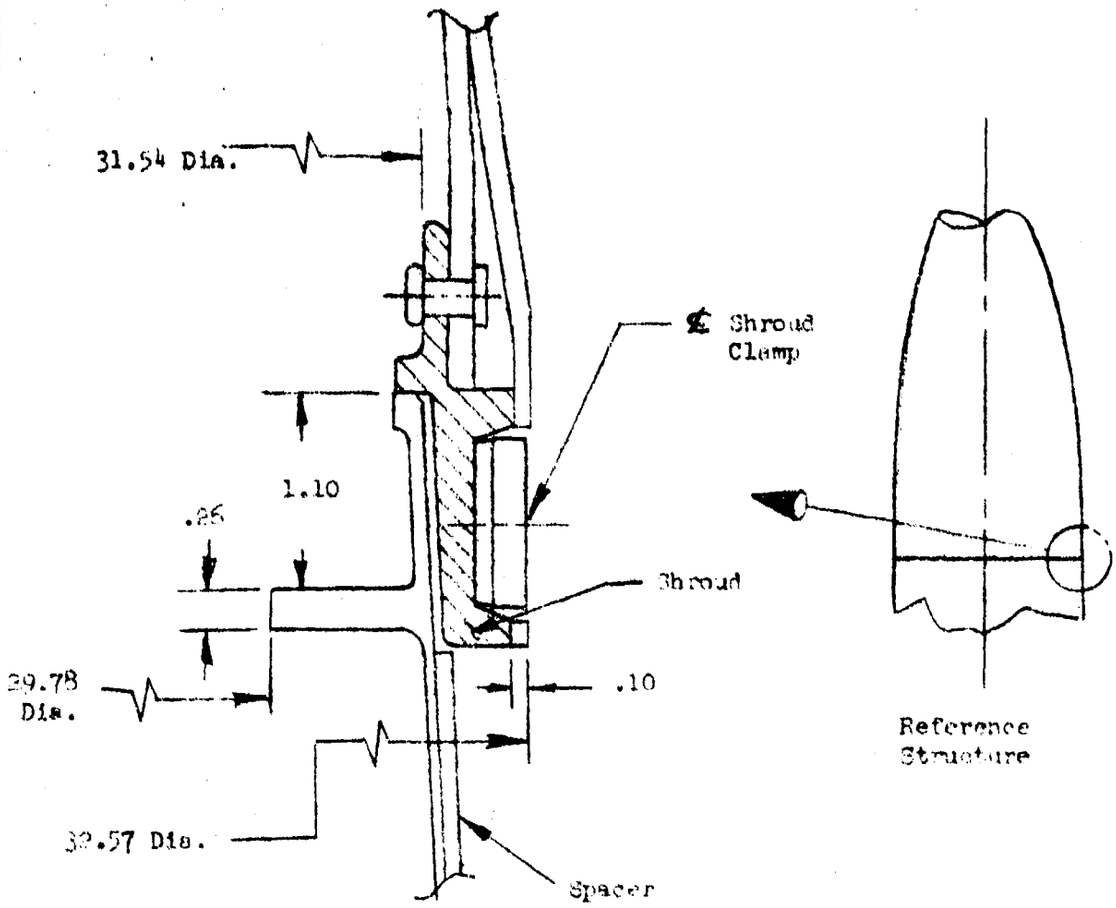

COVER (SHROUD) ASSEMBLY JOINT

Scale None

DESIGN LOAD - Ref. Fig. A 169xx Series

AVERAGE DIAMETER - As Shown

MATERIAL - 2014-T6 Al.

FIGURE 2.1.2.1

REFERENCES: Minuteman III Engineering DWG. ICD 25-26564

USE FOR DRAWING AND HANDPRINTING — NO TYPEWRITTEN MATERIAL

2.2 SEPARATION JOINTS

The separation joints described in this section provide inflight release of the payload or the ascent cover from the missile. The joints may be part of integral joints combining the function of assembly and release, in which case a cross reference to ASSEMBLY JOINTS, Section 2.1 will normally be made.

2.2.1 PAYLOAD SEPARATION JOINTS

These joints are commonly located as shown in Figure 2-1 or at the booster interface. The latter type is not shown here. In some cases, additional mechanisms (springs, ordnance thrusters, etc.) are used for separation impulse. These will not be discussed in this document and mention will be made only when necessary to show clearance or functional association with the joint.

2.2.1.1 BALL LOCK EJECTION MECHANISM (FIG. 2.2.1-1)

This joint incorporates a commercially available ball lock into a device to retain, release, deploy and spin a payload. Energy is supplied by springs and/or ordnance devices. The payload is designed to accommodate the selected mechanisms.

Compensation for platform reactions induced by the spin thrust mechanism is necessary.

USE FOR TYPEWRITTEN MATERIAL ONLY

VA 4802 1484 REV. 8-65

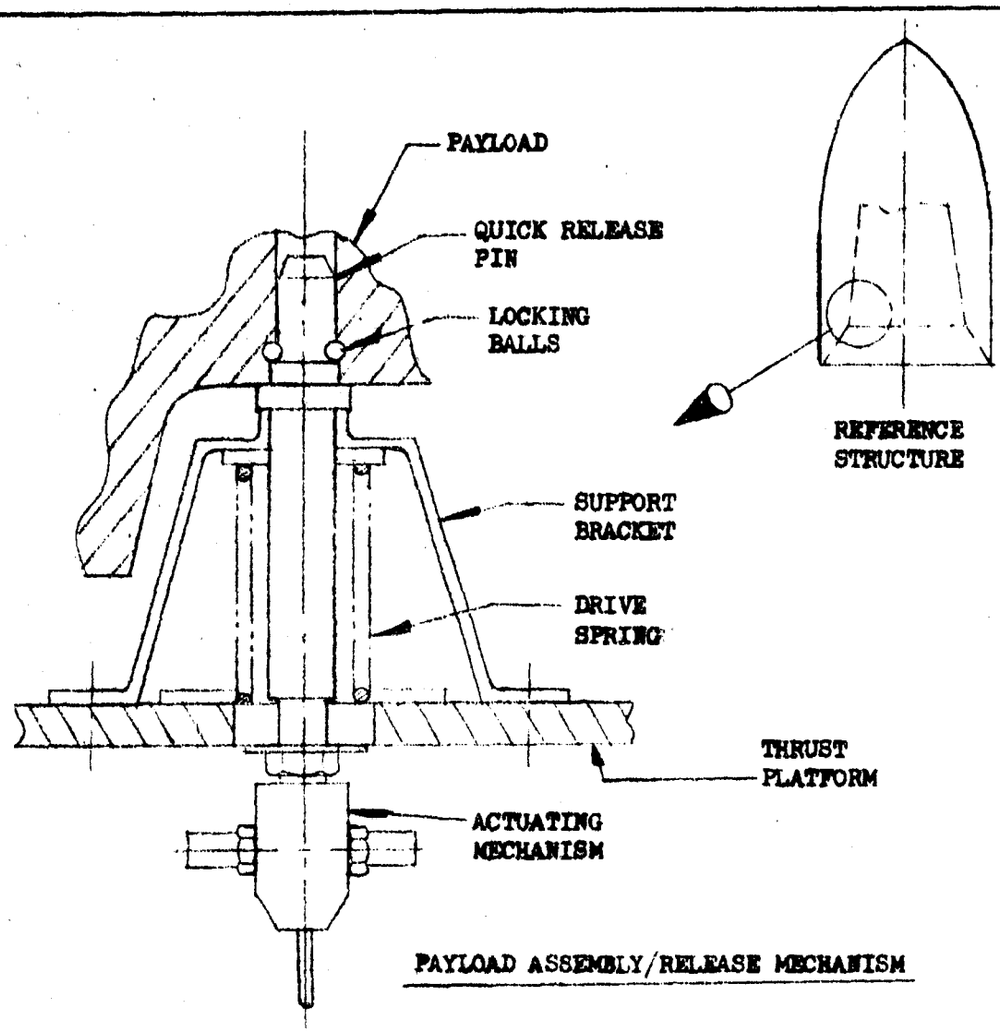

PAYLOAD ASSEMBLY/RELEASE MECHANISM

SCALE: NONE

DESIGN LOAD 1

FIGURE 2.2.1-1

REFERENCE: MINUTEMAN TECHNOLOGY 1 BSD EXHIBIT 62-123
D2-36136-1, MULTIPLE R/V SPINTHRUST MECHANISMS
G.E. DOCUMENT 655D7020

USE FOR DRAWING AND HANDPRINTING — NO TYPEWRITTEN MATERIAL

2.2.1.2 PAYLOAD SEPARATION JOINT (FIGURE 2.2.1-2)

This joint assembles the post boost propulsion system (PBPS) and the third stage motor. Upon actuation of the linear explosive, complete severance of the longitudinal tension capability is provided while retaining shear and compressive capabilities by the butt-lap joint between the ordnance retainer ring and the adapter ring flange until physical separation of the post boost vehicle (PBV) and the Stage III motor.

Adaptations of this joint provide stage to stage separation capability on Minuteman III (Reference Figure 2-3).

USE FOR TYPEWRITTEN MATERIAL ONLY

U9 4802 1434 REV. 6-65

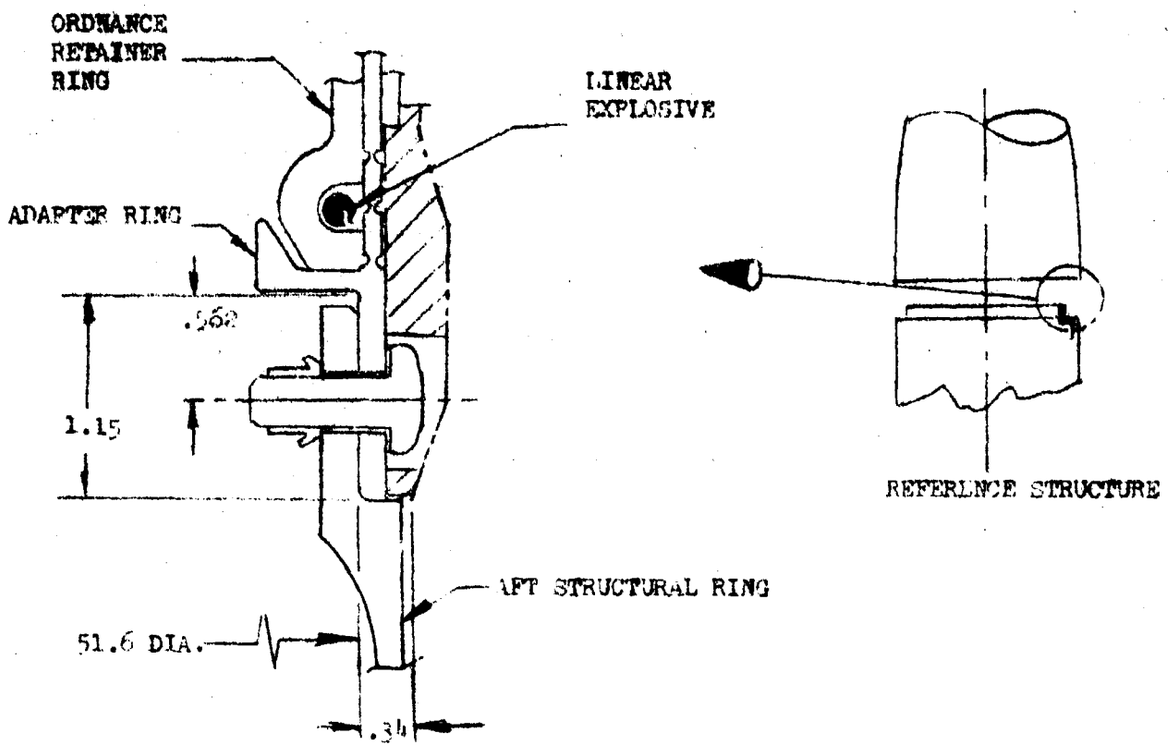

STAGE III TO PBPS SEPARATION JOINT, M² III

CORK

SCALE NONE

DESIGN LOAD - SEE REFERENCE

AVERAGE DIAMETER - 52.0 O. D. 49.4 I. D.

CROSS SECTIONAL AREA - TO BE ADDED

MATERIAL - 2014 T6 AL

FIGURE 2.2.1-2

REFERENCE: MINUTEMAN III ENGINEERING DWG ICD 25-60024

D2-30044-3A1, FIG. A 6553

USE FOR DRAWING AND HANDPRINTING — NO TYPEWRITTEN MATERIAL

DATUM PLANE	BOLT				WASHER		NUTPLATE	
	PART NO.	HEAD STYLE	TORQUE IN/LBS	MATL, H.T. & FINISH	PART NO.	MATL, H.T. & FINISH	PART NO.	MATL, H.T. & FINISH
B	BAC[illegible]-P4L-( ) 11	PAN HD	50 - 70	2	AN960PD416( )	3	NAS686A4	4
C	NAS 1218-5-( )P	PAN HD	165 - 185	5	BAC W10P-225AX	6	NAS686A5	4
D	NAS 1218-5-( ) P 12	PAN HD	165 - 185	5	BAC W10P-225AX	6	NAS686A5	4
E	NAS 1218-5-( ) P	PAN HD	165 - 185	5	BAC W10P-225AX	6	NAS686A5	4
F	NAS 1218-5-( )P	PAN HD	165 - 185	5	BAC W10P-225AX	6	NAS686A5	4
BB	NAS 1218-5-( )P	PAN HD	165 - 185	5	BAC W10P-225AX	6	BAC N10MR5	9
CC	7	100° CSK	——	7	NONE	——	NONE	——
DD	NAS 1218-5-	PAN HD	165 - 185	5	BAC W10P-225AX	6	BAC N10MR5	9
EE	NAS 1218-5-	PAN HD	165 - 185	5	BAC W10P-225AX	6		
FF	NAS 1218-5-	PAN HD	165 - 185	5	BAC W10P-225AX	6		

1 SEE TABLE FOR DES[illegible] OF INTERFACE FAS[illegible]

2 MATL: ALLOY STE[illegible] TO 200,000 PSI PE[illegible] FINISH: DIFFUSED [illegible] PLATE PER AMS 24[illegible]

3 MATL: ALUM ALLO[illegible] OR T4, QQ-A-362[illegible]

4 MATL: SAE 1040, [illegible] H.T.: ROCKWELL C[illegible] CADMIUM PLATE W[illegible] TYPE II, CLASS 3

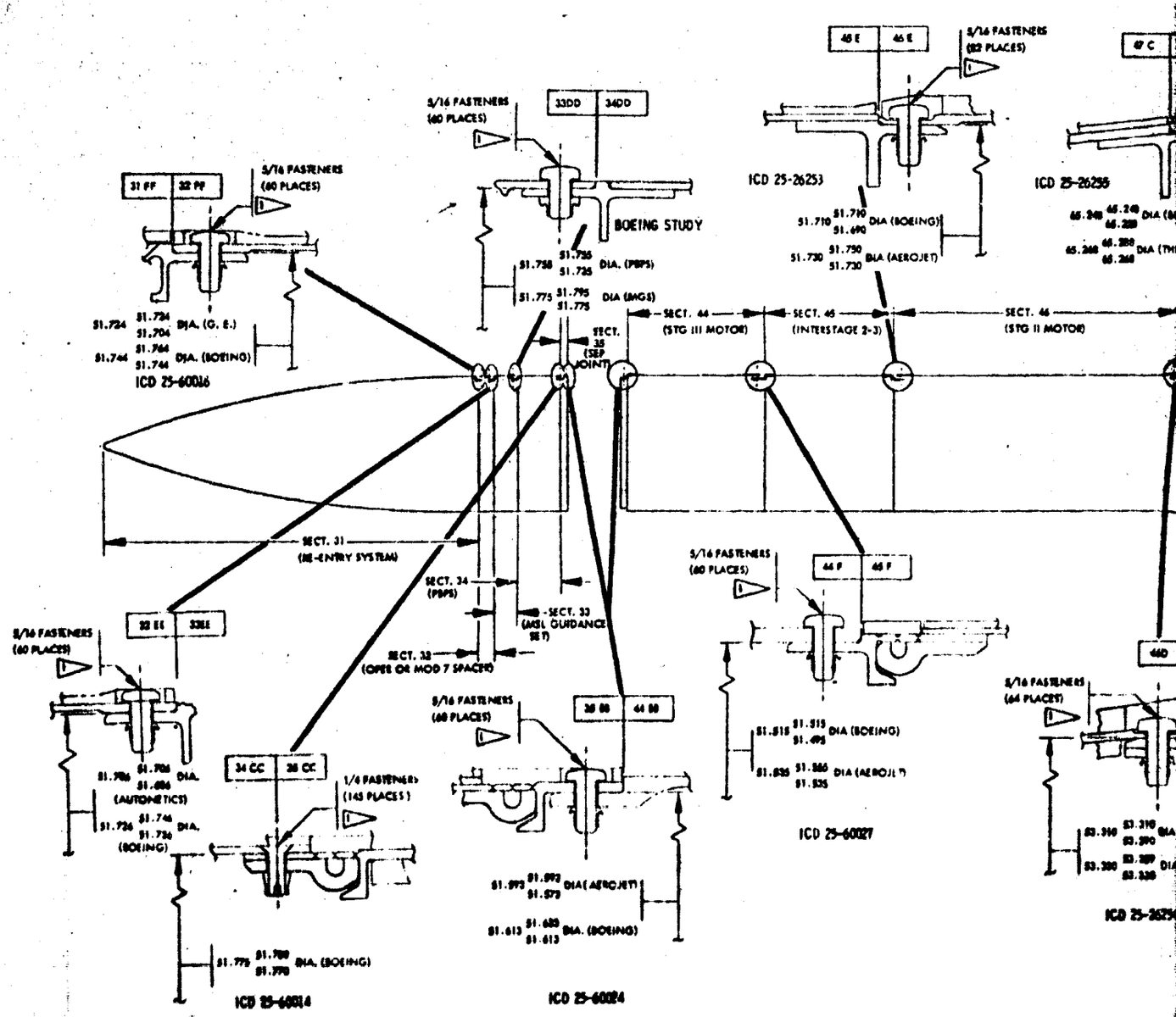

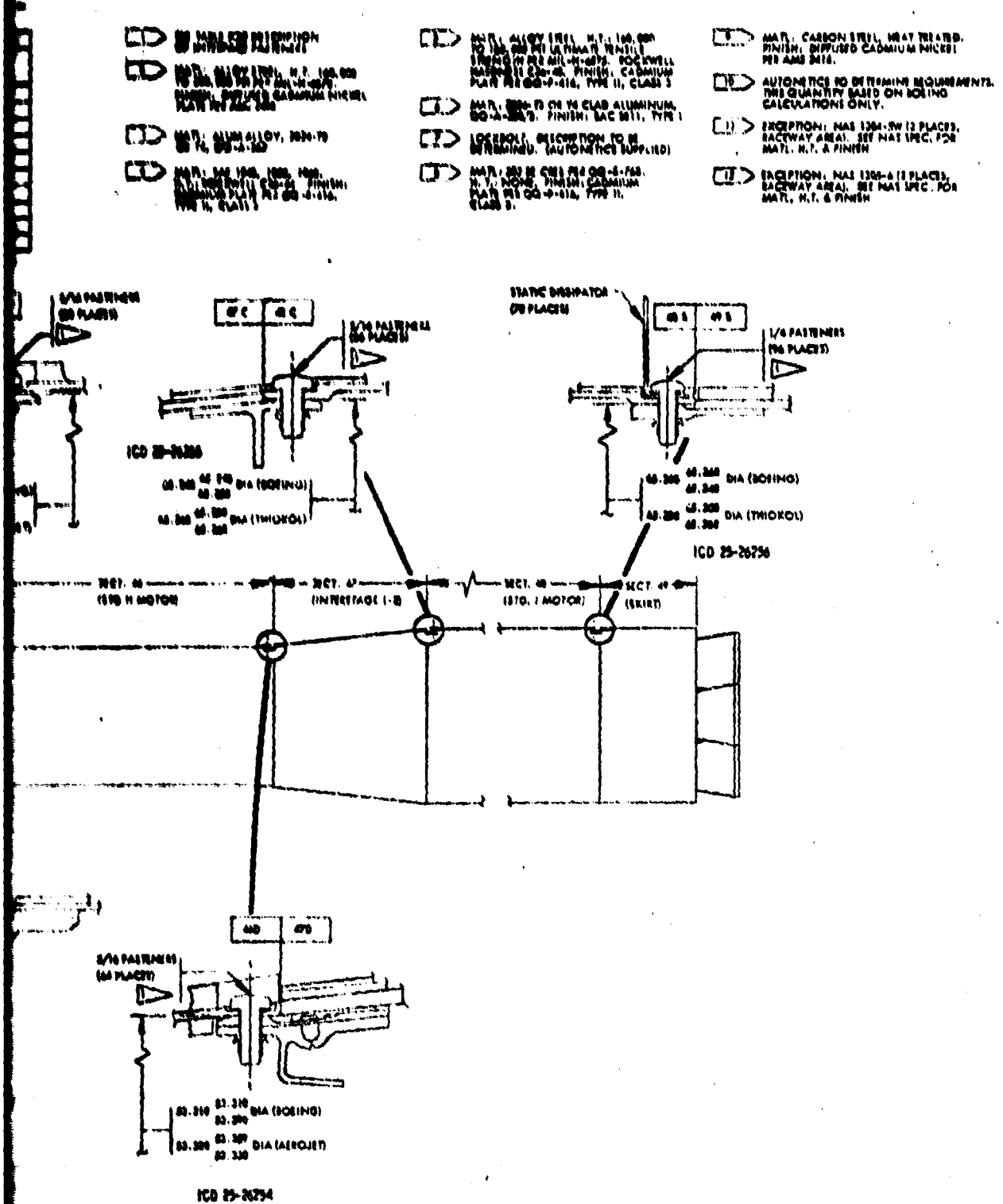

FIGURE 2-3 SUMMARY MAJOR SECTION ASSEMBLY JOINTS LGM 30G MINUTEMAN III

2.2.2 ASCENT COVER SEPARATION JOINTS

Two types of joints are indicated in Figure 2-1, the circumferential and the longitudinal joint. The longitudinal joint is not always used, depending on the mode of ascent cover deployment. Both types of device are shown in this section. Comments of section 2.2.1, PAYLOAD SEPARATION JOINTS, also apply here.

2.2.2.1 NOSE CONE SEPARATION JOINT (FIG. 2.2.2-1)

This detail is of a joint used to separate the nose cone of the HiBEX missile and thereby provide a high drag blunt nose exposure to the air stream.

The joint is an uncomplicated design similar in many respects to a fabrication joint - two skins are butted together and bolted using bolts and nut plates. The separation is done with a linear shaped charge which expends its energy primarily in one direction, in this case outward, to cut the nose cone skin. This impulse is sufficient to make the physical break but not to effect total separation. To do this, a gas generator and thruster is used to "blow" the two pieces apart.

For additional details of the ordnance used, refer to section 5.1.

2.2.2.2 LONGITUDINAL COVER SEPARATION JOINT (FIG. 2.2.2-2)

This joint is a design concept developed as part of an ascent shroud study using Burner II design load requirements. The joint provides longitudinal separation of the shroud followed by separation and blow off along the hinge line.

USE FOR TYPEWRITTEN MATERIAL ONLY

U 3 4807 1434 R E V 1-65

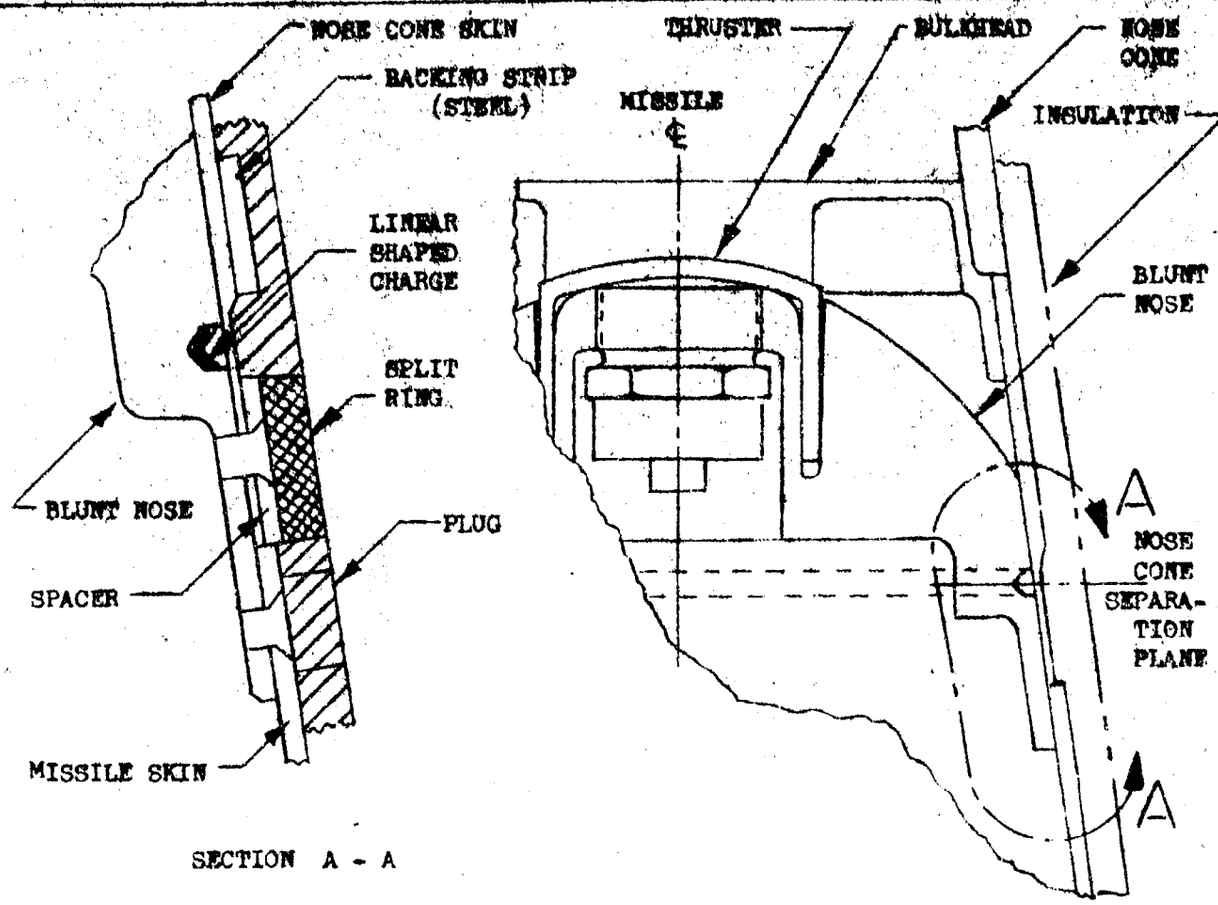

CORK

RUBBER

NOSE CONE SEPARATION JOINT

SCALE NONE

DESIGN LOAD - [illegible]

AVERAGE DIAMETER - [illegible] OD

CROSS SECT. AREA - N.A.

MATERIAL - ALUMINUM

[illegible]

FIGURE [illegible]-1

REFERENCES: HIBEX PROGRAM DWG: [illegible]

USE FOR DRAWING AND HANDPRINTING — NO TYPEWRITTEN MATERIAL

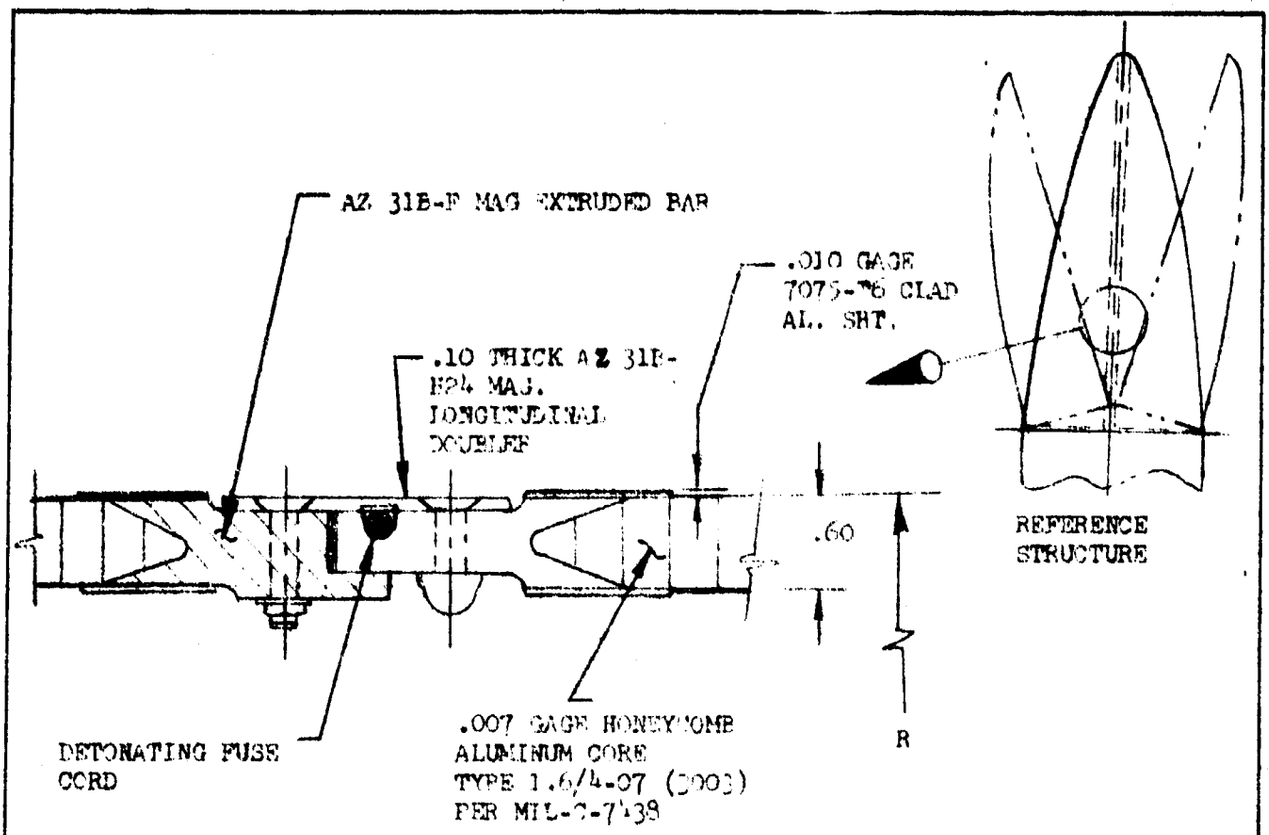

PAYLOAD SHROUD SEPARATION JOINT

SCALE NONE

DESIGN LOAD TO BE ADDED

AVERAGE DIAMETER - N. A.

MATERIAL - AS SHOWN

FIGURE 2.2.2-2

REFERENCES: D2-23828-1, ASCENT SHROUD DESIGN, FIGURE 1, p 7

USE FOR DRAWING AND HANDPRINTING — NO TYPEWRITTEN MATERIAL

2.2.2.3 DOVETAIL HEAT SHIELD JOINT (FIG. 2.2.2-3)

This joint is part of a heat shield separation system which consists of six pins along each of two separation lines located 180° apart on a longitudinal plane separating two halves of the heat shield. Pyrotechnic thrusters pull the pins through a system of aluminum straps. The Dovetail joint along the edges of the two halves provides ring bending continuity between the pinned joints which in turn provide ring bending shear and normal force continuity. Mating sawtooth plates at each pinned joint provide beam shear continuity between the heat shield halves. (See Dwg Reference, Fig. 2.2.2-3)

USE FOR TYPEWRITTEN MATERIAL ONLY

U3 4802 1434 REV. 8-67

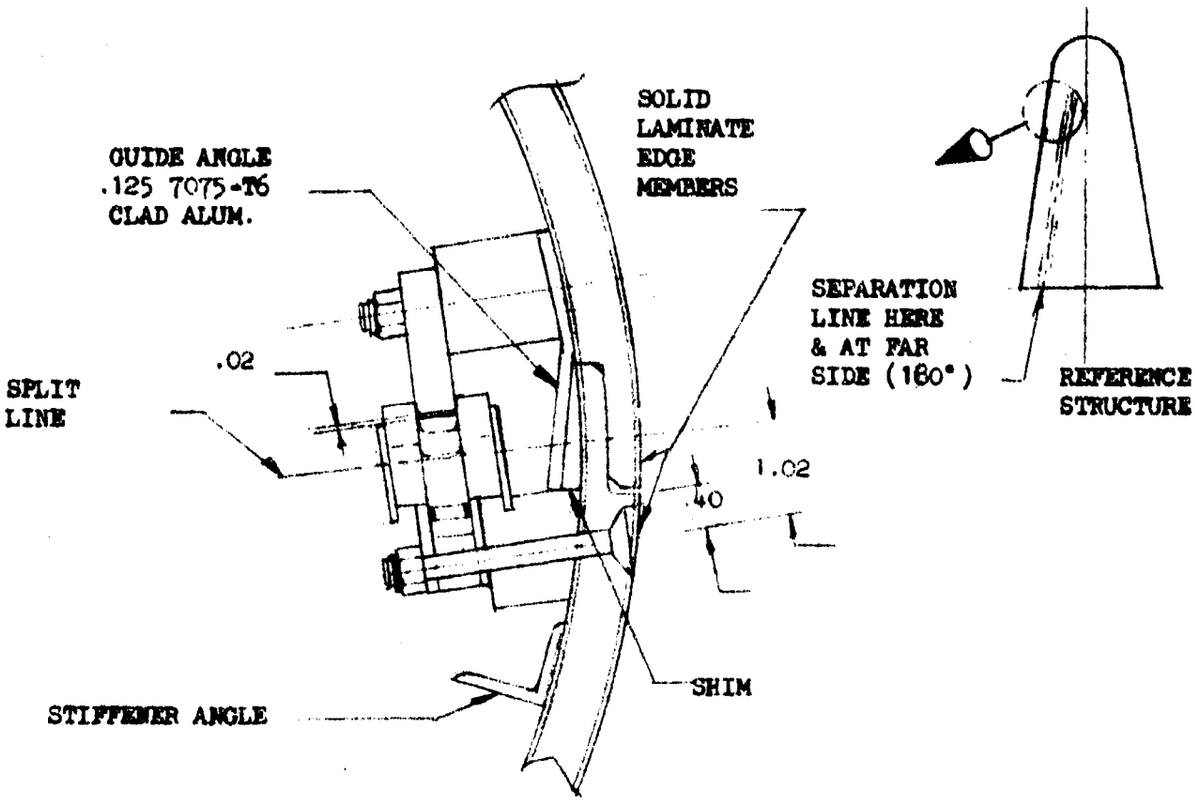

DOVETAIL JOINT SECTION OF SEPARATION ASSEMBLY

SCALE: NONE

DESIGN LOAD:	RING BENDING MOMENT = ± 80 IN-LB/IN LIMIT
DIAMETER:	41 IN. (APPROXIMATELY)
MATERIAL	7075-T6 AL

FIGURE 2.2.2-3

REFERENCE: BURNER II DWG 25-53736
DOCUMENT D2-113381-1

USE FOR DRAWING AND HANDPRINTING — NO TYPEWRITTEN MATERIAL

3.0 BOOSTER STAGE JOINTS

This section includes the variety of structural joints designed to (1) enable the assembly and disassembly of missile segments for purposes of manufacture, transportation and maintenance in the field and (2) enable the staging separation necessary for the missile's mission flight profile.

Figure 3-1 schematically shows the typical location of the joints on a missile booster segment and interstage. This is representative of any stage. It is not intended that a given application require all of the indicated joints or that they be located as shown. As an example, an inflight separation function and a field joint may be integrated into a single structural joint. For clarity, all joints are indicated as separate items on Figure 3-1.

3.1 ASSEMBLY JOINTS

The assembly joints described in this section are those used to connect segments of the booster to each other, through interstages or not. This connection might be purely a shop fabrication assembly or it might be a field operation done many times. The joints may be integral joints as in payload stages. If so, cross referencing is done.

3.1.1 INTERSTAGE OR BOOSTER ADAPTERS

This section covers the assembly joints made between one booster stage and another, usually through an interstage. The joints are usually referred to as "adapter rings" and commonly form the interface between two manufacturers (Reference Fig. 2-3). These rings may be purely assembly or may be integrated with a separation joint if the location is one where staging is desirable. Both types are covered here.

USE FOR TYPEWRITTEN MATERIAL ONLY

3.1.1.1 Interstage Adapter Assembly Joint (Fig 3.1.1-1)

This joint detail is a section through a circumferential joint used on the Minuteman missile. The dimensions given are typical of the Stage 1 - Stage 2 interstage as are the diameter and cross section area. The ring's characteristic shape is also typical of the Stage 2 - Stage 3 interstage on Minuteman. For reference, the numbers in parenthesis pertain to that ring.

The ring is a dual purpose joint. It permits both field assembly and fabrication assembly in the shop. It also functions as an inflight separation joint (Ref. Section 3.2.1.1).

Two bolt circles are provided in the joint, both to be used with bolt-nut plate combinations. The lower bolts are primarily fabrication fasteners and are backed with standard nutplates. The upper bolts are for field assembly and disassembly and are backed with floating nutplates. Cork plugs are commonly used to replace insulation removed during disassembly.

Structurally, the main ordnance carrying ring is not the primary load carrying member Compression loads are reacted by a butting together of the interstage skins, tension loads by the tension tie. The joint is designed to react all boost flight loads as well as silo overpressure

3.1.1.2 Interstage Adapter Assembly Joint (Fig. 3.1.1-2)

This joint is designed for assembly of an interstage (or other structure such as a test module) on top of a booster stage. The assembly operation may be done in the manufacturing facility or the field. The ring is typical of that used on the Minuteman (F-Missile) program to join the Autonetics Guidance and Control module to the third booster stage.

USE FOR TYPEWRITTEN MATERIAL ONLY

U.S. NAVY 1414 (REV. 8-65)

The ring itself is riveted to the interstage structure and forms an integral component. The assembly operation is done then by means of the bolts and nutplates shown. Nuts may be used instead of nutplates, depending on the accessibility and "dropped-nut" considerations. Cork plugs are commonly used to replace any insulation removed during disassembly.

The joint is designed to retain its structural integrity throughout boost flight loads and silo overpressures.

3.1.1.3 STAGE TO STAGE ASSEMBLY JOINT (FIG. 3.1.1-3)

This detail is a section through a circumferential joint used on the HiBEX Missile. It is used to assemble the upper stage instrumentation package to the booster. The assembly operation could take place either in the fabrication facility or a munitions field facility.

The ring is riveted to the lower missile stage, which is made of fiberglass in this application. The upper stage is attached with bolt-nutplate combinations. The joint is designed to resist extremely high boost acceleration loads.

USE FOR TYPEWRITTEN MATERIAL ONLY

U3 (607 1454 REV. 8-72

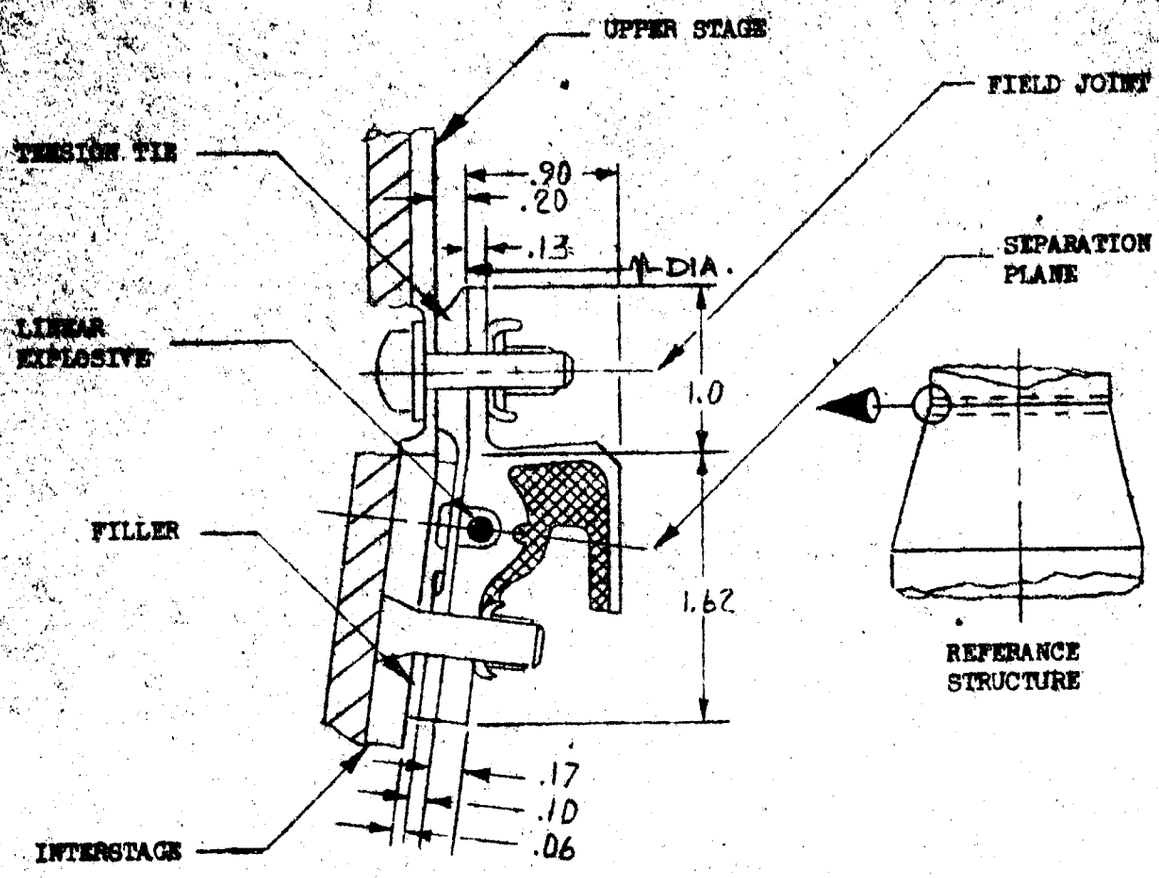

FORWARD
I - II INTERSTAGE ADAPTER
ASSEMBLY JOINT

CORK

PR-1910

SCALE FULL

DESIGN LOAD - (CRITICAL) 913 #/IN TENSION LOAD (BEARING)

AVERAGE DIAMETER - 53.0 IN. OD (36.7 IN. OD),

CROSS SECT. AREA - 1.003 SQ. IN. (1.156 SQ. IN.)

MATERIAL - 2024 AL.

FIGURE 3.1.1-1

REFERENCES: MINUTEMAN ENGINEERING DWG 25-37645
25-37647

REF. 3.2.1-1

NO TYPEWRITTEN MATERIAL — DRAWING AND HANDWRITING

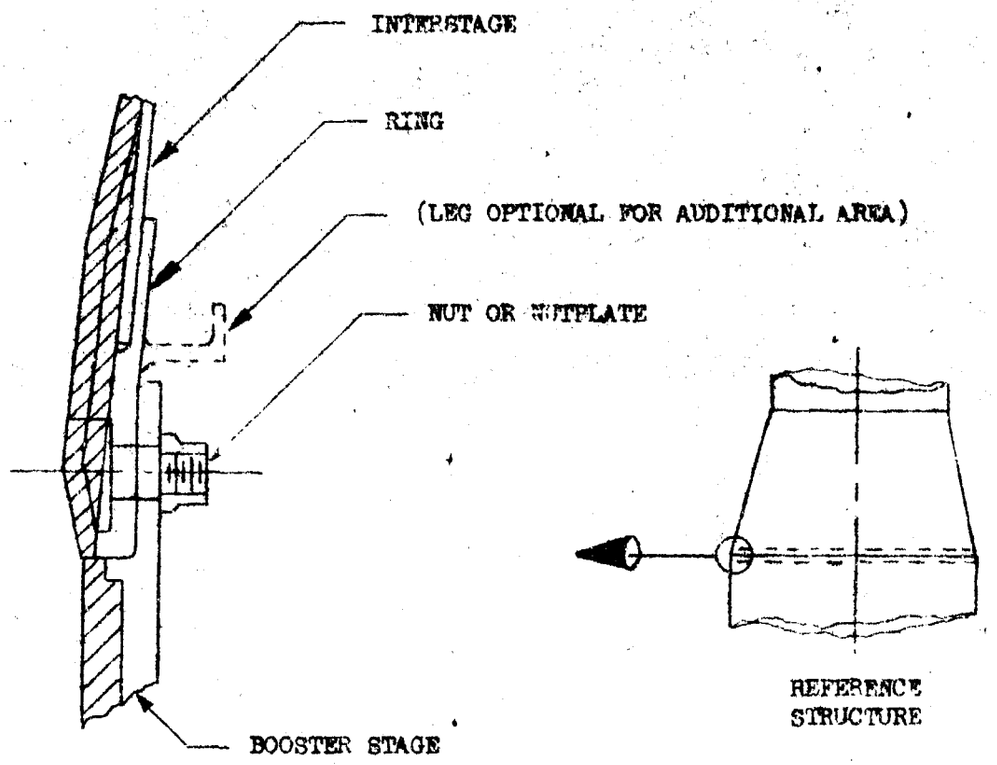

INTERSTAGE ADAPTER
ASSEMBLY JOINT

CORK

SCALE NONE

DESIGN LOAD - [illegible] LB. TENSION (RING BUCKLING CRITICAL)

AVERAGE DIAMETER - [illegible] IN. OD (APPROXIMATE),

CROSS SECT. AREA - UNKNOWN

MATERIAL - ALUMINUM

FIGURE [illegible]

REFERENCES: MINUTEMAN INTERFACE CONTROL DRAWING [illegible]

USE FOR DRAWING AND HANDPRINTING — NO TYPEWRITTEN MATERIAL

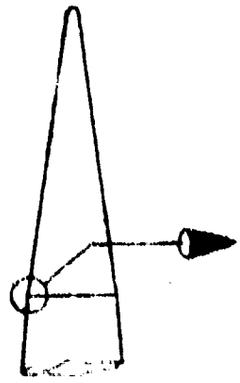

REFERANCE STRUCTURE

STAGE TO STAGE ASSEMBLY JOINT

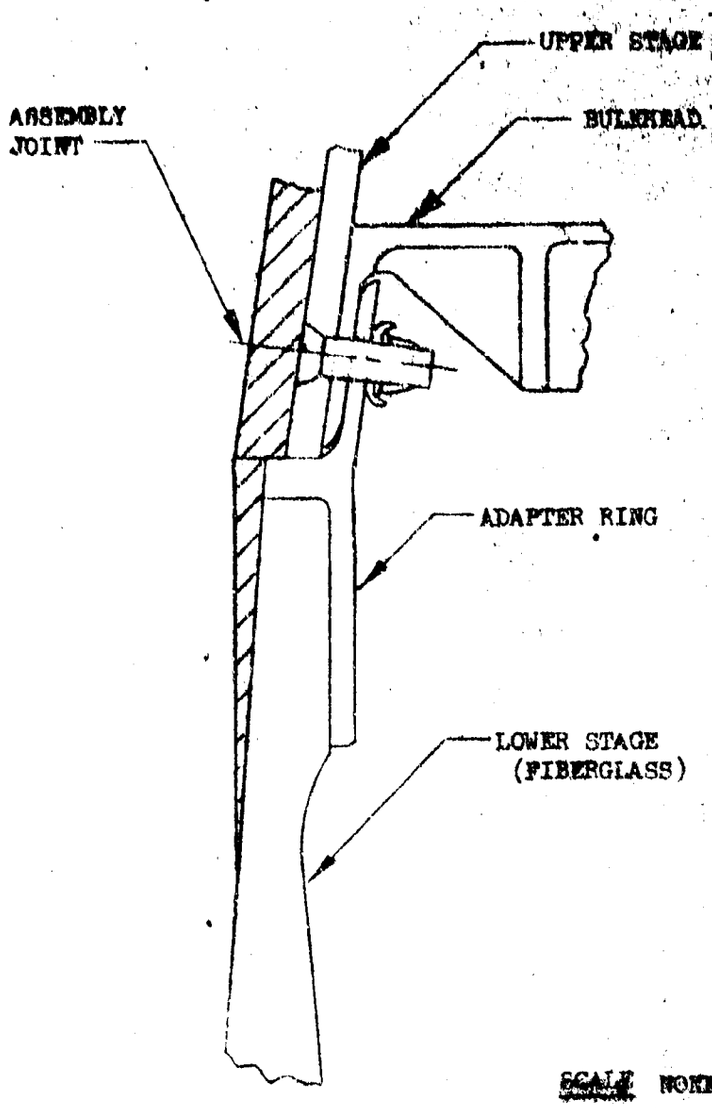

CORK

SCALE NONE

DESIGN LOAD - AXIAL LOAD = 202K lbs
BENDING [illegible] = [illegible] | APPROXIMATE

AVERAGE DIAMETER - [illegible] IN. OD,

CROSS SECT. AREA - [illegible]

MATERIAL - ALUMINUM & FIBERGLASS

FIGURE 3.2.1-2

REFERENCES: HIBEX PROGRAM DWG [illegible]

FIGURE 3.2.1-4

USE FOR DRAWING AND HANDPRINTING — NO TYPEWRITTEN MATERIAL

3.1.2 MIDBODY OR MID-INTERSTAGE RINGS

These joints are almost entirely used integrally with a staging separation joint. Their purpose is to assemble the staged segments, usually in a fabrication environment.

3.1.2.1 Interstage Assembly Joint (Fig. 3.1.2-1)

This joint detail is a section through a circumferential joint used on the Minuteman missile. The dimensions given are typical of the Stage 1 - Stage 2 interstage.

The ring is a dual purpose joint. It permits both field assembly and fabrication assembly in the shop. It also functions as an inflight staging joint (Ref. Section 3.2.1.2).

Two bolt circles are provided in the joint, both to be used with bolt-nut plate combinations. The lower bolts are primarily fabrication fasteners and are backed with standard nuts. The upper bolts are also fabrication assembly fasteners but are backed with floating nutplates.

Structurally, the main ordnance carrying ring is not the primary load carrying member. Compression loads are reacted by a butting together of the interstage skins, tension loads by the tension tie. The joint is designed to react all boost flight loads as well as silo overpressures.

3.1.2.2 Interstage Assembly Joint (Fig. 3.1.2-2)

This joint detail is a section through a circumferential joint used on the Minuteman missile. The dimensions given are typical of the Stage 2 - Stage 3 interstage.

USE FOR TYPEWRITTEN MATERIAL ONLY

U 2 4508 1438 REV. 8-65

3.1.2.2 (Cont.)

The ring is a dual purpose joint. It permits both field assembly and fabrication assembly in the shop. It also functions as an inflight staging joint (Ref. Section 3.2.1.3).

Two bolt circles are provided in the joint, both to be used with bolt-nutplate combinations. The lower bolts are primarily fabrication fasteners and are backed with standard nuts. The upper bolts are also fabrication assembly fasteners but are backed with floating nutplates.

Structurally, the main ordnance carrying ring is not the primary load carrying member. Compression loads are reacted by a butting together of the interstage skins, tension loads by the tension tie. The joint is designed to react all boost flight loads as well as silo overpressures.

USE FOR TYPEWRITTEN MATERIAL ONLY

U.S. 4807 1434 REV. 6-65

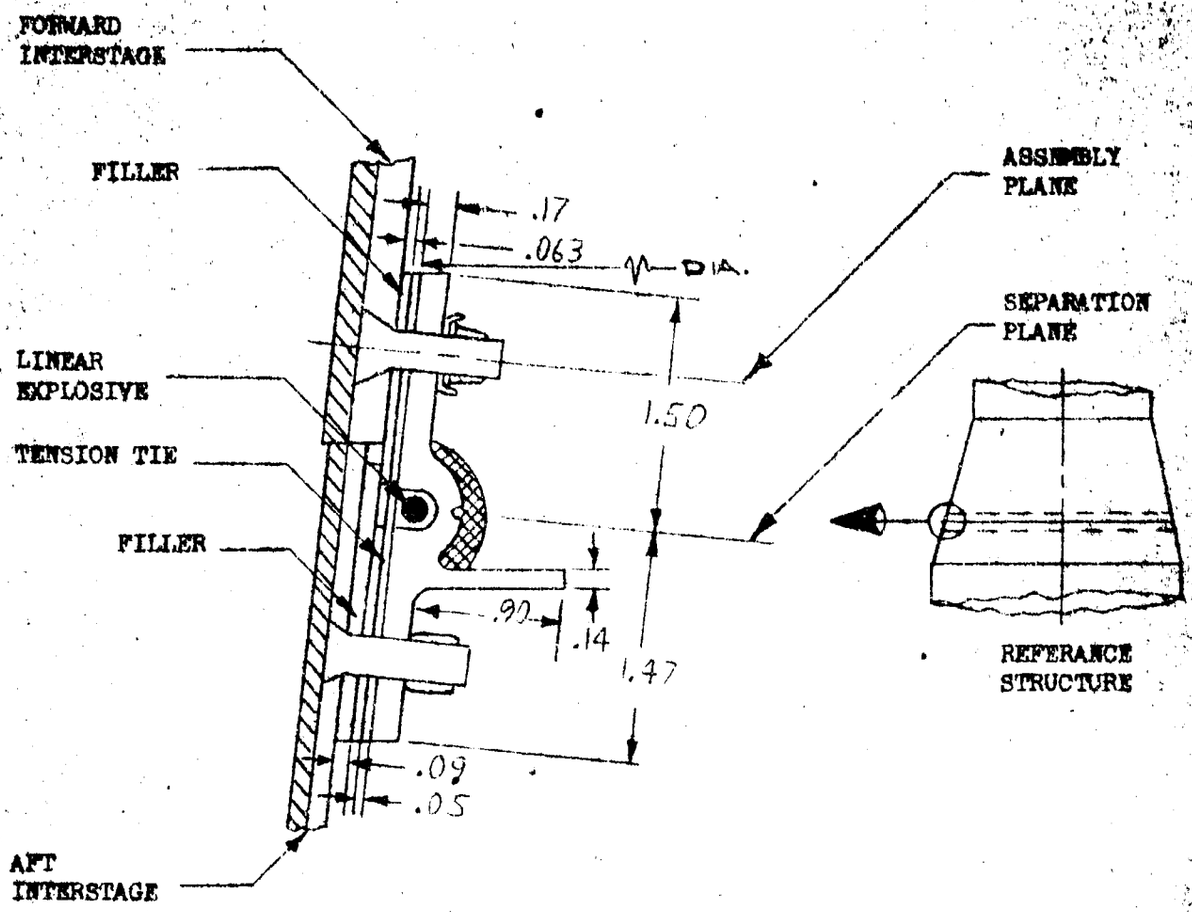

CORK

PR-1910

I-II INTERSTAGE ASSEMBLY/SEPARATION JOINT

SCALE NONE

CRITICAL DESIGN LOADS - 1200 #/IN TENSION, 1200 #/IN. BEARING

AVERAGE DIAMETER - 62.0 IN. OD,

CROSS SECT. AREA - 1.169 SQ. IN.

MATERIAL - 2024 AL.

FIGURE 3.1.2-1

REFERENCES: MINUTEMAN ENGINEERING DWG: [illegible]
[illegible]

PARA. 3.2.1.2

USE FOR DRAWING AND HANDPRINTING — NO TYPEWRITTEN MATERIAL

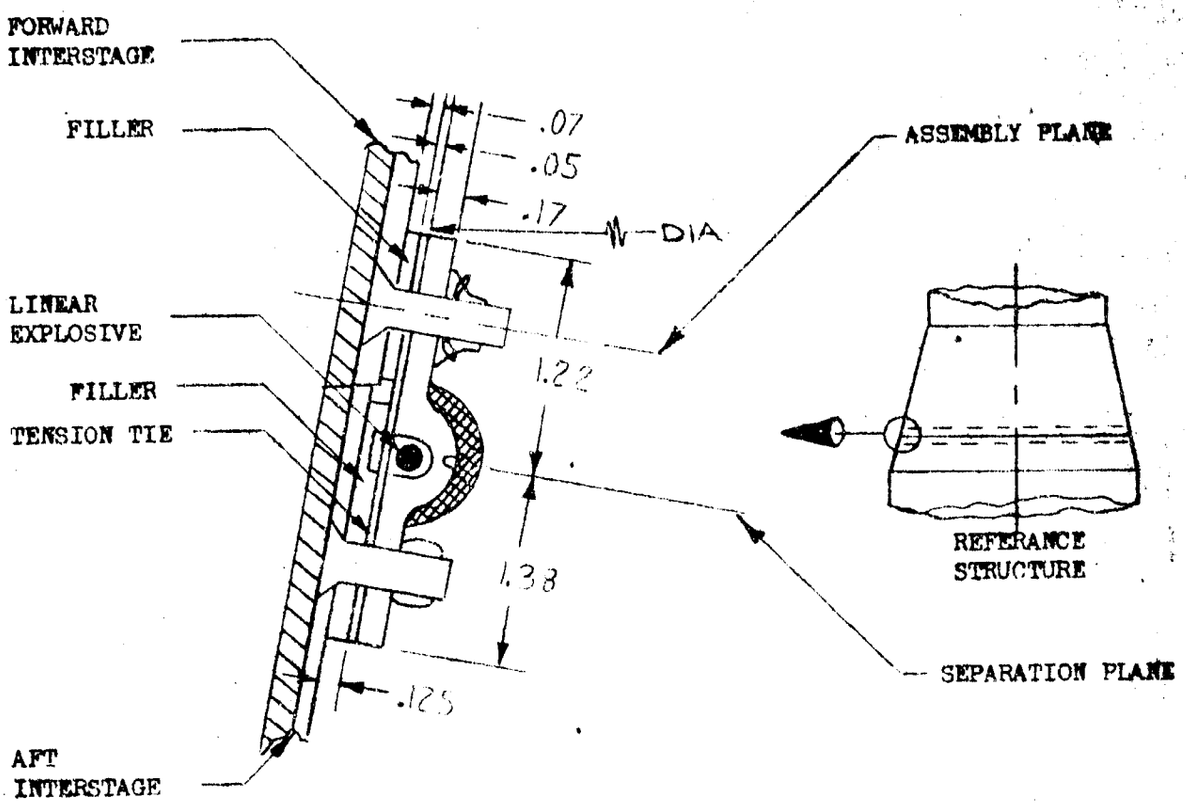

CORK

PR-1910

II-III INTERSTAGE ASSEMBLY/SEPARATION JOINT

SCALE FULL

DESIGN LOAD - 1000#/in. TENSION, TITAR

AVERAGE IDAMETER - 46.0 IN. OD,

CROSS SECT. AREA - .910 SQ. IN.

MATERIAL - 2024 AL.

FIGURE 3.1.2-2

REFERENCES: MINUTEMAN ENGINEERING DWG: 25-37645
25-37647

PARA 3.2.1.3

USE ROM DRAWING AND HANDPRINTING — NO TYPEWRITTEN MATERIAL

3.2 SEPARATION JOINTS

Described in this section are the variety of joints designed to provide inflight staging of a missile booster. This is the mechanism which separates a burned out motor from the remaining "live" booster stages. It also may separate an interstage structure from an associated motor case. As in most of the other joints described in this document, these joints may be part of integral joints combining other functions. When this is the case, cross referencing to appropriate sections will be made.

3.2.1 STAGING RINGS

These rings function to either "stage" an expended booster segment from an unexpended one or to separate an interstage from a booster. Figure 3-1 shows typical locations for this type of joint In some instances they are used in conjunction with longitudinal joints to separate and segment an interstage. This is covered in more detail in Section 3.2.2.

3.2.1.1 Interstage Adapter Booster Skirt Removal Joint (Fig. 3.2.1-1)

This joint detail is a section through a circumferential joint used on the Minuteman missile. The dimensions given are typical of the Stage 2 - Stage 3 interstage as are the diameter and cross section area. The ring's characteristic shape is also quite typical of the Stage 1 - Stage 2 interstage on Minuteman.

The ring is a dual purpose joint. It provides the inflight interstage skirt removal function, working in conjunction with the longitudinal joint similar to that described in Section 3.2.2.1. It also functions as a field assembly joint (Ref. Section 3.1.1.1). The seal restricts transfer of hot gas into the III stage motor area.

USE FOR TYPE WRITTEN MATERIAL ONLY

U3 4602 1484 (REV. 8-56)

The separation impulse to provide the required function comes from a linear explosive charge. The ring is designed to contain any particle fragmentation from this charge. This function is enhanced by the use of a rubber-like material, PR-1910 (BMS 5-62) which can contain small fragments. The primary function of the material however is to absorb much of the shock of the explosion.

Structurally, the main ordnance carrying ring is not the primary load carrying member. Compression loads are reacted by a butting together of the stage skins, tension loads by the tension tie. The joint is designed to react all boost flight loads as well as silo overpressures.

For additional details on the ordnance used in this joint, refer to Section 5.1.

3.2.1.2 Booster Staging Joint (Fig. 3.1.2-1)

This joint detail is a section through a circumferential joint used on the Minuteman missile. The dimensions given are typical of the Stage 1 - Stage 2 interstage.

The ring is a dual purpose joint. It provides the inflight booster staging function, separating the upper stage from the expended stage. It also functions as an assembly joint (Ref. 3.1.2.1).

The separation impulse to provide the required function comes from a linear explosive charge. The ring is designed to contain any particle fragmentation from this charge by the use of a rubber-like material, PR-1910 (BMS 5-62) which can contain small fragments. The primary function of the material however is to absorbe much of the shock of the explosion.

USE FOR TYPEWRITTEN MATERIAL ONLY

U3-PCC 1434 REV. 8-65

Structurally, the main ordnance carrying ring is not the primary load carrying member. Compression louds are reacted by a butting together of the stage skins, tension loads by the tension tie. The joint is designed to react all boost flight loads as well as silo overpressures.

For additional details on the ordnance used in this joint, refer to Section 5.1.

3.2.1.3 . Booster Staging Joint (Fig. 3.1.2-2)

This joint detail is a section through a circumferential joint used on the Minuteman missile. The dimensions given are typical of the Stage 2 - Stage 3 interstage.

The ring is a dual purpose joint. It provides the inflight booster staging function, separating the upper stage from the expended stage. It also functions as an assembly joint (Ref. 3.1.2.2).

The separation impulse to provide the required function comes from a linear explosive charge. The ring is designed to contain any partical fragmentation from this charge by the use of a rubber-like material, PR-1910 (BMS 5-62) which can contain small fragments. The primary function of the material however is to absorb much of the shock of the explosion.

Structurally, the main ordnance carrying ring is not the primary load carrying member. Compression loads are reacted by a butting together of the stage skins, tension loads by the tension tie. The joint is designed to react all boost flight loads as well as silo overpressures.

For additional details on the ordnance used in this joint, refer to Section 5.1.

USE FOR TYPEWRITTEN MATERIAL ONLY
U3 4807 1434 REV. 8-65

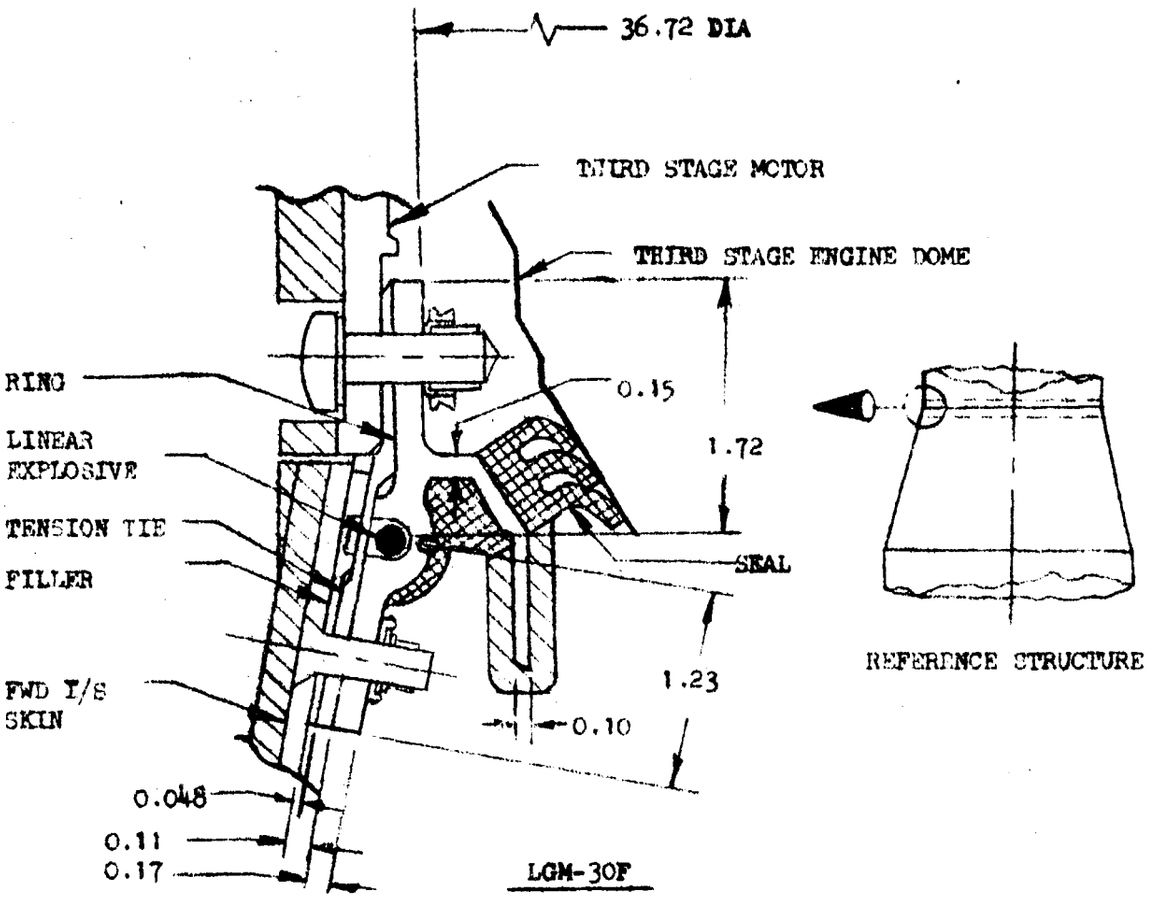

LGM-30F

II - III INTERSTAGE FORWARD ADAPTER RING

CORK

FR-1910

SCALE FULL

DESIGN LOAD TO BE ADDED

AVERAGE DIAMETER - 36.7 IN. O. D.

CROSS SECTIONAL AREA - .688 SQ. IN.

MATERIAL - 2024 AL.

FIGURE 3.2.1-1

REFERENCES: MINUTEMAN ENGINEERING (LGM-30F) DWG 25-37645
25-37647

USE FOR DRAWING AND HANDPRINTING — NO TYPEWRITTEN MATERIAL

3.2.1.4 BOOSTER SEPARATION JOINT (FIG. 3.2.1-2)

This detail is a section through a circumferential joint used on the HiBEX Missile. It functions to separate the lower (booster) stage from the upper (instrumentation package) stage during flight.

The joint primarily consists of a circumferential retainer ring bolted to the inside of the fiberglass skirt. The ring contains a linear shaped charge designed to direct its energy in an outward direction and thereby sever the fiberglass skirt circumferentially. The retainer ring is not designed to react any loads. It is massive enough however to absorb shock from the explosive charge.

For additional details on the ordnance used in this joint, refer to Section 5.1.2.

USE FOR TYPEWRITTEN MATERIAL ONLY

U.S. 4905 1434 REV. 8-65

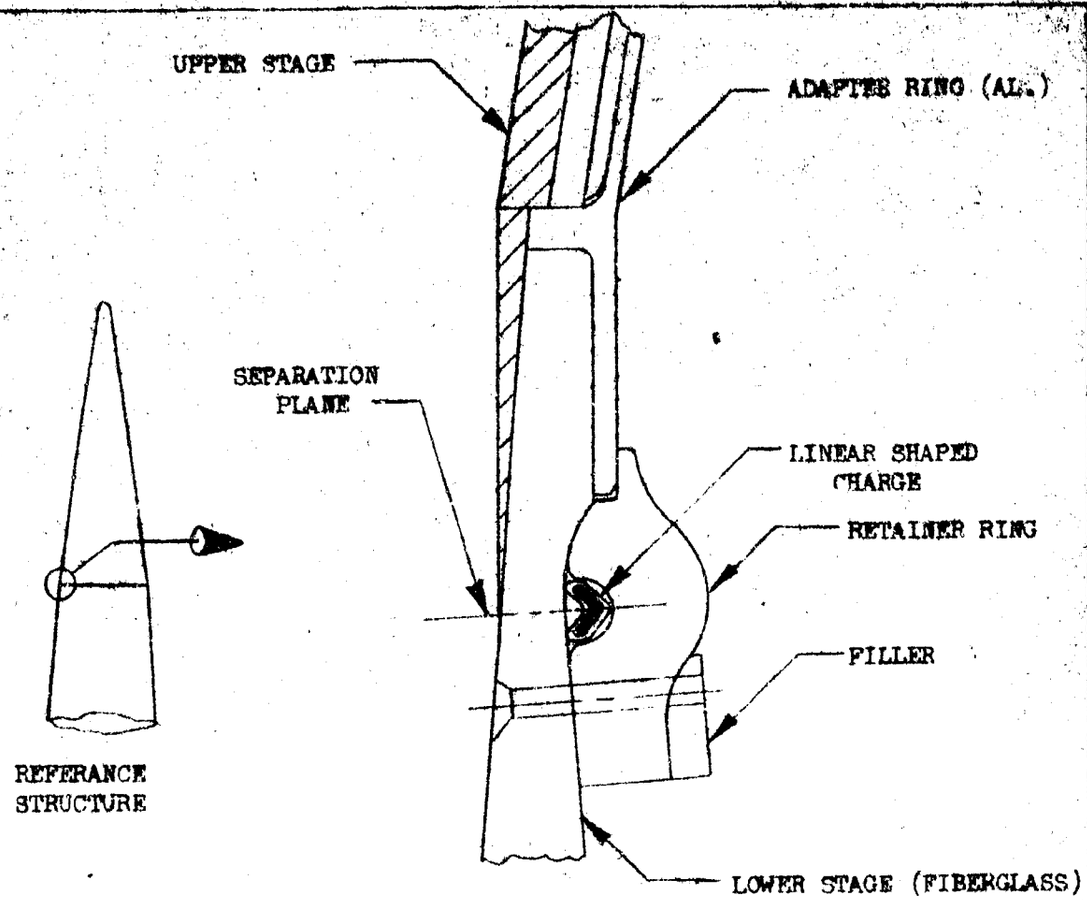

BOOSTER SEPARATION JOINT

CORK

SCALE NONE

DESIGN LOAD - AXIAL LOAD = [illegible] 1K lbs [illegible] APPROXIMATE [illegible]

AVERAGE DIAMETER - [illegible] IN. [illegible]

CROSS SECT. AREA - [illegible]

MATERIAL - FIBERGLAS[illegible]

FIGURE [illegible]-2

REFERENCES: HEBEX PROGRAM DWG [illegible]

FIGURE [illegible]

USE BLUE DRAWING AND HANDPRINTING — NO TYPEWRITTEN MATERIAL

3.2.2 LONGITUDINAL JOINTS

These joints are used to separate an interstage or other missile segment into a number of sections for removal from the booster in flight. They are longitudinal rather than circumferential and usually function with a circumferential joint (Ref. Fig. 3-1 and Section 3.2.1).

No distinction is made in this section between separation and assembly joints. These joints have one primary function which is separation. They must be assembled, of course, but this is differentiated from the assembly joints discussed elsewhere since they are used to assemble missile sections, not joints.

3.2.2.1 Interstage Longitudinal Joint (Fig. 3.2.2-1)

This joint is typical of those used on the Minuteman missile to split both the Stage 1 - Stage 2 and the Stage 2 and Stage 3 interstage. It is used in conjunction with the circumferential separation joint discussed in Section 3.2.1.1. The dimensions given are the same as both interstages, the only difference being the joint length. Numbers in parenthesis pertain to the Stage 2 and Stage 3 interstage.

The joint works simultaneously with the skirt removal joint which separates the skirt from the upper booster stage. At the same time, the skirt is split into four sections, effecting both the axial removal from the path of flight, and the radial removal for clearance. The separation impulse providing this function comes from a linear explosive charge. The ring is designed to contain any particle fragmentation with the rubber-like material, PR-1910 (BMS 5-62).

USE FOR TYPEWRITTEN MATERIAL ONLY

U.S. 4122 1494 REV. 8-58

The ring is designed to retain all structural integrity throughout flight loads and allo overpressures.

For additional details on the ordnance used in this joint, refer to Section 5.1.

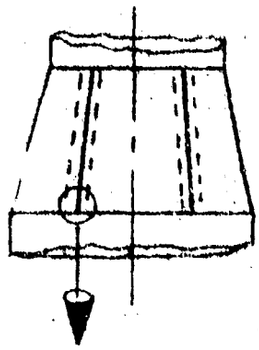

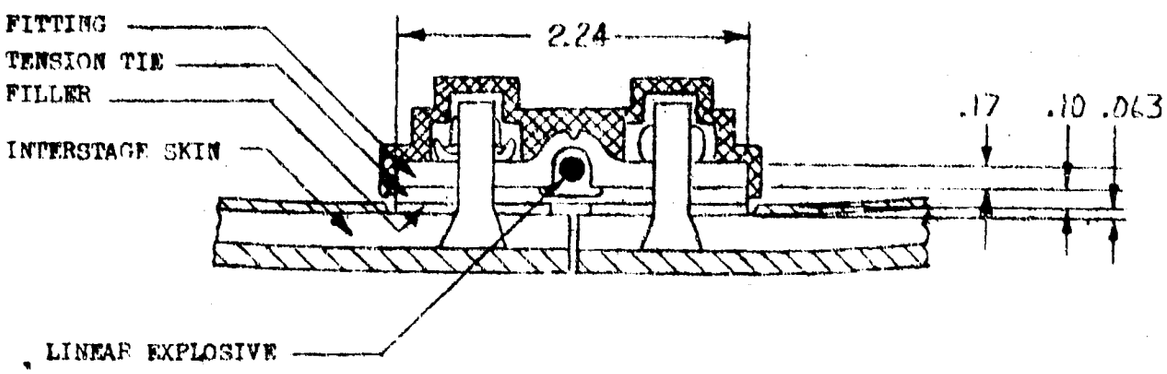

CORK

PR-1910

I-II INTERSTAGE LONGITUDINAL JOINT

SCALE FULL

I - II INTERSTAGE

DESIGN LOAD [illegible] LB. TENSION (STAGING PRESSURE)

AVERAGE DIAMETER - (N.A.) AVERAGE LENGTH - [illegible] IN. ([illegible] IN.)

CROSS SECT. AREA - [illegible] SQ. IN.

MATERIAL - 2024 AL.

FIGURE [illegible]

REFERENCES: MINUTEMAN ENGINEERING DWG: [illegible]

USE FOR DRAWING AND HANDPRINTING — NO TYPEWRITTEN MATERIAL

3.3 CONCEPT VARIATIONS

The joint concept illustrated on Figure 2.2.1-2 was the final configuration of several considered by Missile Structures Organization (2-6455) for the Stage III to PBPS separation joint on Minuteman III. Variations of this final design (referenced above) have been used elsewhere on Minuteman III (Ref. Fig. 2-3) and to assemble the first and second stages of HIBEX.

The concepts which preceded the above choice were conceived as solutions to the same design requirements. Those concepts are presented here because they illustrate the varied approach to missile joint design, and because each joint, taken separately, provides valuable examples of joint design and design detail. Although the evaluation of each joint provided herein is in response to a specific application, it provides information useful to the designer which is pertinent to any application for which the joint might be considered.

USE FOR TYPEWRITTEN MATERIAL ONLY

ITEM	DESCRIPTION	SHOCK EFFECTS	WEIGHT	ENVELOPE
	BASE LINE INTERNAL FRACTURING LINEAR EXPLOSIVE JOINT SYSTEM	———	23.0	PER BOEING LAYOUT MDUS-LO-68 REV. "A" DTD 11-17-65
1.	BALL LOCK RELEASE JOINT (10 EQUALLY SPACED)	VERY LOW	31.5	EXCEEDS ENVELOPE ALL AROUND
2.	INTERNAL BAND SEPARATION JOINT (SOLID BAND WITH ORDNANCE RELEASED OR ORDNANCE ACTUATED RELEASE MECHANISM)	VERY LOW	22.1	EXCEEDS ENVELOPE ALL AROUND
3.	EXTERNAL TENSION BAND SEPARATION JOINT (SOLID BAND WITH EXPLOSIVE BOLT RELEASE SYSTEM)	1	16.0	EXCEEDS ENVELOPE LOCALLY
4.	EXTERNAL TERNSION BAND SEPARATION JOINT (SEPARATE BAND WITH TENSION SHOES WITH EXPLOSIVE BOLT RELEASE SYSTEM)	1	15.6	EXCEEDS ENVELOPE LOCALLY
5.	EXTERNAL TENSION BAND SEPARATION JOINT (SEPARATE BAND WITH TENSION SHOES WITH EXPLOSIVE NUT RELEASE SYSTEM)	1	16.0	EXCEEDS ENVELOPE LOCALLY
6.	EXTERNAL TENSION BAND SEPARATION JOINT (SEPARATE BAND WITH TENSION SHOES WITH EXPLOSIVE TURNBUCKLE RELEASE SYSTEM)	1	15.6	EXCEEDS ENVELOPE LOCALLY

LOPE	INTER-FACE	SCHED-ULE	STRUCTURAL	RELIABILITY	ORDNANCE QUALIFICATION	ORDNANCE LOADING
EING T MDUS- REV. "A" -17-65	4 5	—	—	— —	QUALIFIED BY SIMILARITY	EXTERNAL LOADING
DS OPE OUND	4 6	2	NEED VERIFICATION ON LOAD DISTRIBUTION INTO HPC FWD SKIRT	LOWER	QUALIFICATION OF ORDNANCE ACTUATED DEVICE REQ'D.	INTERNAL LOADING
DS OPE OUND	4 5	2	RELEASE LINKAGE AND BAND DESIGN WITH REGARD TO JOINT STIFFNESS MAY PRESENT PROBLEMS	SIMILAR		INTERNAL LOADING
DS OPE LY	4 5	2	3	SIMILAR		EXTERNAL LOADING
DS OPE LY	4 5	2	3	SIMILAR		EXTERNAL LOADING
DS OPE LY	4 5	2	3	SIMILAR		EXTERNAL LOADING
DS OPE LY	4 5	2	3	SIMILAR		EXTERNAL LOADING

2

FIGURE 3.3-1

ITEM	DESCRIPTION	SHOCK EFFECTS	WEIGHT	ENVELOPE	INTER FACE
7.	EXTERNAL TENSION BAND SEPARATION JOINT (SEPARATE BAND WITH TENSION SHOES WITH SHAPE CHARGE RELEASE SYSTEM)	1	16.8	WITHIN ENVELOPE	4 5
8.	EXPLOSIVE BOLT RELEASE SYSTEM (10 EQUALLY SPACED)	1	24.0	EXCEEDS ENVELOPE ALL AROUND	4 6
9.	EXPLOSIVE NUT RELEASE SYSTEM (10 EQUALLY SPACED)	1	24.0	EXCEEDS ENVELOPE ALL AROUND	4 6
10.	ORDNANCE RELEASED BONDED SEPARATION JOINT	LESS BECAUSE OF SMALLER CHARGE & NO BREAKING OF METAL	12.60	WITHIN ENVELOPE	4 5
11.	REVISED LINEAR ORDNANCE CHARGE JOINT (BASED ON LOCKHEED REPORT)	LESS BECAUSE OF SMALLER CHARGE & REVISED JOINT	16.6	.60 LONGER THAN PRESENT ENVELOPE ON SKIN LEG ONLY	4 5
12.	REVISED LINEAR ORDNANCE CHARGE JOINT USING SMALL CHARGE (5 - 10 GR/FT)	LESS BECAUSE OF SMALLER CHARGE	12.9	WITHIN ENVELOPE	4 5
13.	SHAPED CHARGE ORDNANCE SYSTEM	LESS BECAUSE OF SMALLER CHARGE. THE FORCE IS DIRECTED LATERALLY	11.1	WITHIN ENVELOPE	4 5

LOPE	INTER-FACE	SCHED-ULE	STRUCTURAL	RELIABILITY	ORDNANCE QUALIFICATION	ORDNANCE LOADING
IN LOPE	4, 5	2	3	SIMILAR	QUALIFICATION OF ORDNANCE ACTUATED DEVICE REQ'D.	INTERNAL LOADING
EDS LOPE ND	4, 6	2	NEED VERIFICATION ON LOAD DISTRIBUTION INTO HPC FWD SKIRT	LOWER		INTERNAL LOADING
EDS LOPE ND	4, 6	2	NEED VERIFICATION ON LOAD DISTRIBUTION INTO HPC FWD SKIRT	LOWER		INTERNAL LOADING
IN LOPE	4, 5	2	EVALUATION OF STRUCTURAL BOND ON TENSION MEMBER	SIMILAR		INTERNAL LOADING
NGER RESENT LOPE KIN NLY	4, 5	2	NO PROBLEMS	SIMILAR		EXTERNAL OR INTERNAL LOADING
IN LOPE	4, 5	2	NO PROBLEMS	SIMILAR		EXTERNAL LOADING
IN LOPE	4, 5	2	NO PROBLEMS	SIMILAR		INTERNAL LOADING

FIGURE 3.3-2

2

1 COMPARABLE OR LESS THAN G&C UMBILICAL RELEASE.

2 REQUIRE APPROXIMATELY 4 - 6 MONTHS TO DEVELOP JOINT AND 5 MONTHS MINIMUM TO QUALIFY THE ORDNANCE DEVICE.

3
1. LOCAL AREAS AROUND RELEASE PROVISIONS DO NOT CARRY COMPRESSION OR TENSION LOADS. DISTRIBUTION INTO HPC FWD SKIRT OR PBPS MAY BE PROBLEM.
2. DESIGN OF TENSION BAND TO PROVIDE REQUIRED JOINT STIFFNESS MAY PRESENT PROBLEMS. (i.e., PRE-LOAD, THERMAL LOADS, ETC.)

4 ELECTRICAL INTERFACE COMPATIBLE WITH MGS.

5 MECHANICAL INTERFACE COMPATIBLE WITH STAGE III MOTOR & PBPS.

6 MECHANICAL INTERFACE NOT COMPATIBLE WITH APPROPRIATE PBPS CONFIGURATION.

FIGURE 3.3-3

USE FOR TYPEWRITTEN MATERIAL ONLY

U.S. 4802 1434 REV. A-65

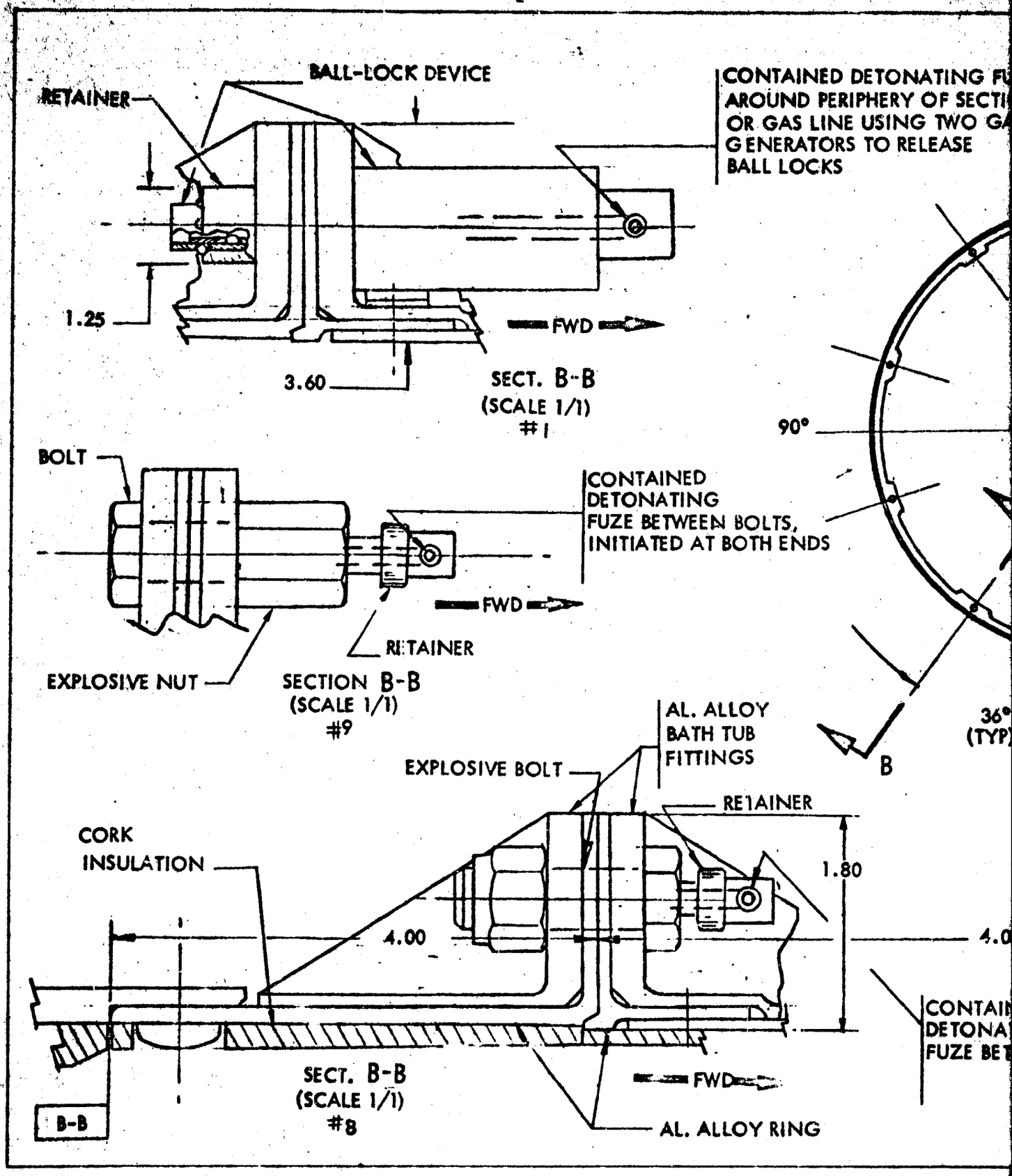
BALL-LOCK DEVICE
RETAINER
CONTAINED DETONATING FU
AROUND PERIPHERY OF SECTI
OR GAS LINE USING TWO GA
GENERATORS TO RELEASE
BALL LOCKS
1.25
FWD
3.60
SECT. B-B
(SCALE 1/1)
#1
90°
BOLT
CONTAINED
DETONATING
FUZE BETWEEN BOLTS,
INITIATED AT BOTH ENDS
FWD
RETAINER
EXPLOSIVE NUT
SECTION B-B
(SCALE 1/1)
#9
AL. ALLOY
BATH TUB
FITTINGS
36°
(TYP)
B
EXPLOSIVE BOLT
RETAINER
CORK
INSULATION
1.80
4.00
4.0
CONTAI
DETONA
FUZE BE
SECT. B-B
(SCALE 1/1)
#8
FWD
B-B
AL. ALLOY RING

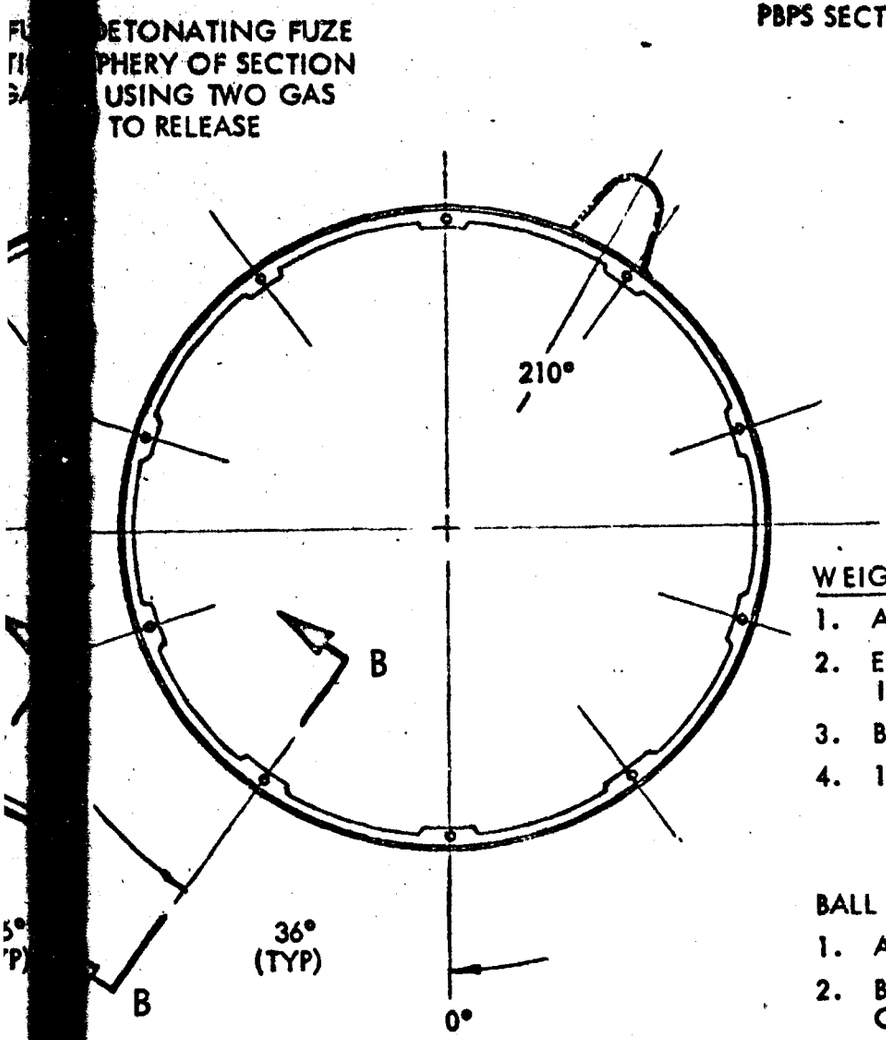

SECTION A-A
(REAR VIEW REF)
(SCALE 1/10)

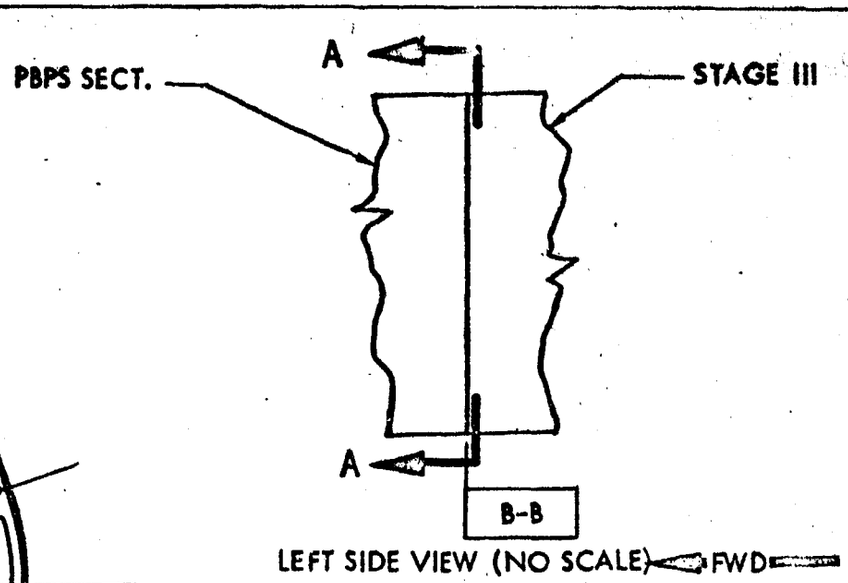

WEIGHT ESTIMATE

1.	AL. ALLOY RINGS & BATHTUB FITTINGS	15.2
2.	EXPLOSIVE BOLT & ORDNANCE INITIATION SYSTEM	4.0
3.	BOLT RETAINERS	3.5
4.	10% GROWTH ALLOWANCE	2.3
	TOTAL	24.0

BALL LOCK

1.	AL. ALLOY RINGS & BATHTUB FITTINGS	17.5
2.	BALL LOCK RELEASE MECHANISM & ORD. INITIATION SYSTEM	11.3
3.	10% GROWTH ALLOWANCE	2.7
	TOTAL	31.5

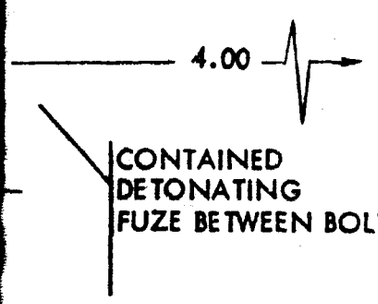

LOAD/BOLT 7500#

CONFIGURATION 1, 8, & 9

FIGURE 3.3-4: EXPLOSIVE BOLT, NUT & BALL LOCK SEPARATION SYSTEM

2

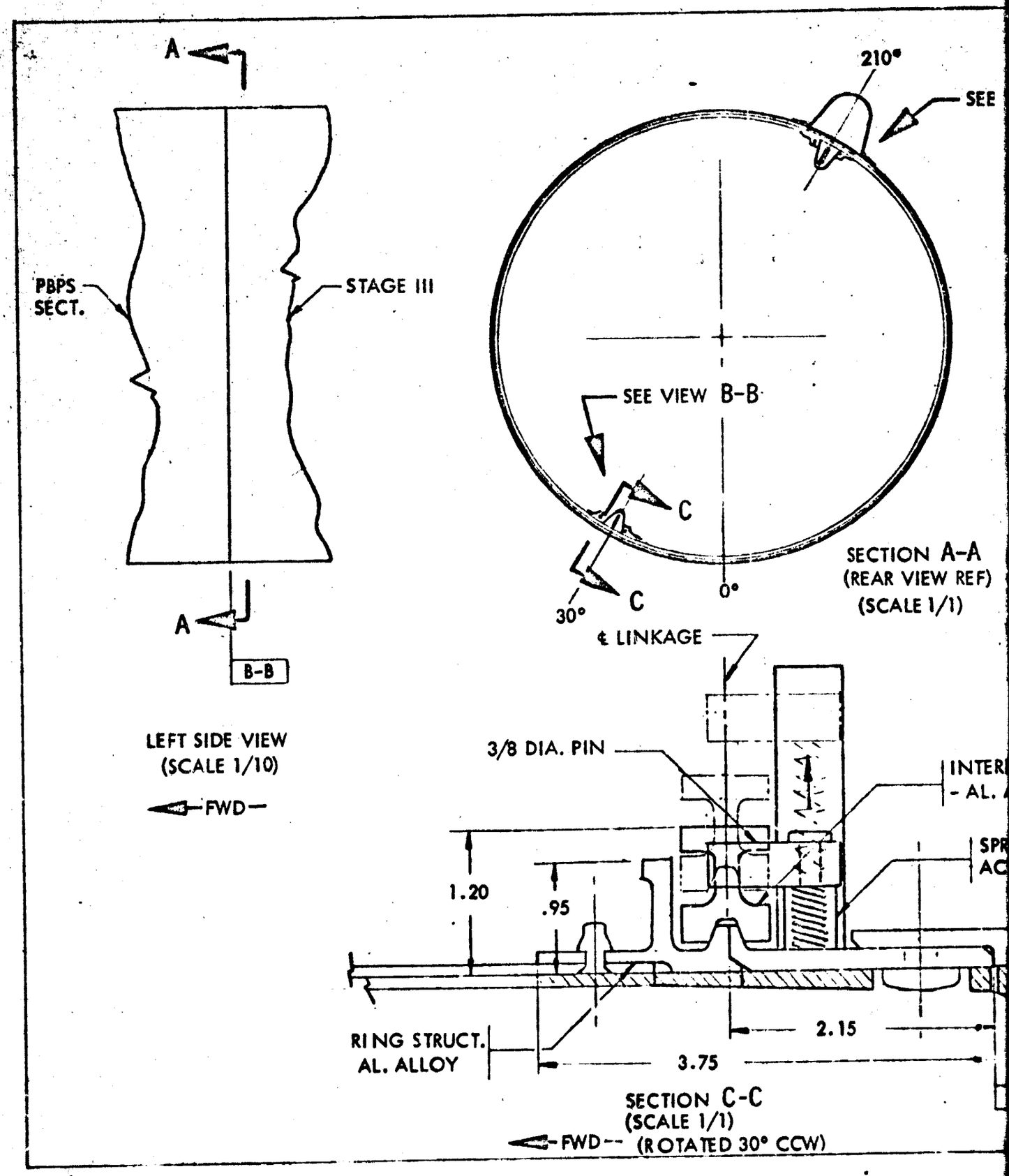
A
PBPS SECT.
STAGE III
A
B-B
LEFT SIDE VIEW
(SCALE 1/10)
FWD
210°
SEE
SEE VIEW B-B
C
C
30°
0°
SECTION A-A
(REAR VIEW REF)
(SCALE 1/1)
℄ LINKAGE
3/8 DIA. PIN
INTER
- AL.
SPR
AC
1.20
.95
2.15
RING STRUCT.
AL. ALLOY
3.75
SECTION C-C
(SCALE 1/1)
FWD
(ROTATED 30° CCW)

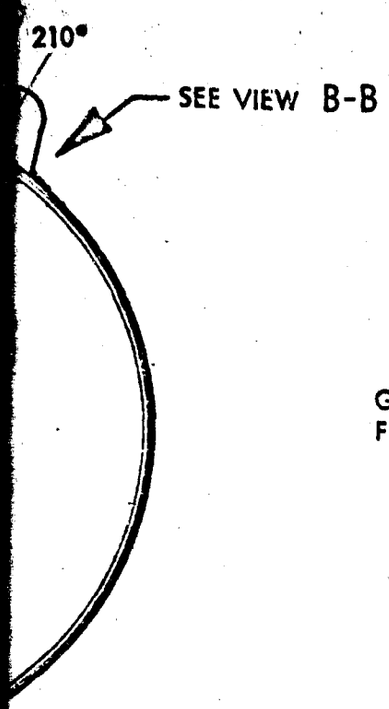

SECTION A-A
(REAR VIEW REF)
(SCALE 1/1)

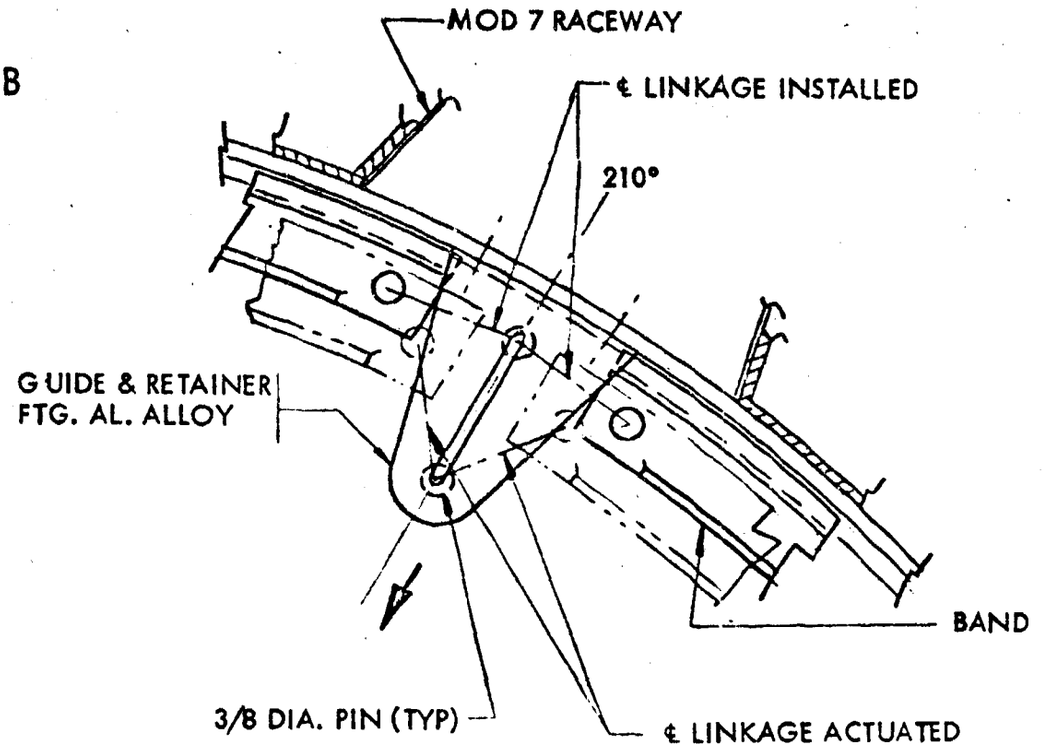

VIEW B-B
(SCALE 1/2)

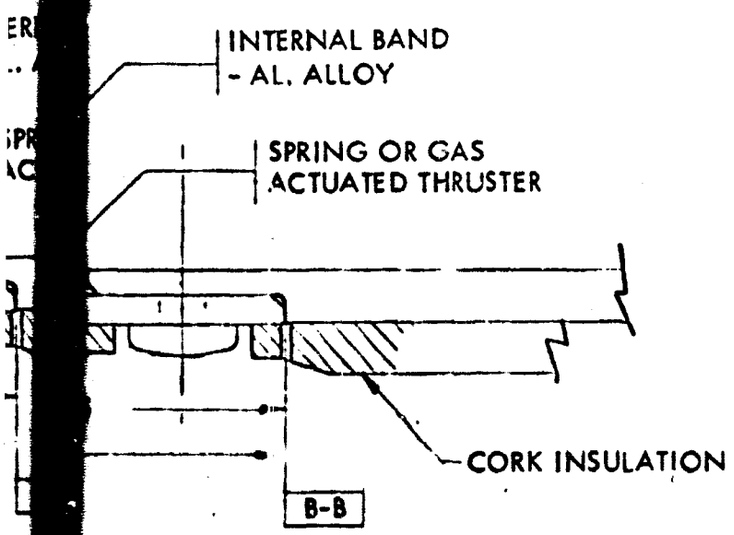

WEIGHT ESTIMATE

BAND	5.0
RING STRUCTURE	9.1
LINKAGE, GUIDE FTGS & THRUSTERS	6.0
10% GROWTH ALLOWANCE	2.0
TOTAL WEIGHT	22.1

CONFIGURATION 2

FIGURE 3.3-5: INTERNAL BAND SEPARATION SYSTEM

2

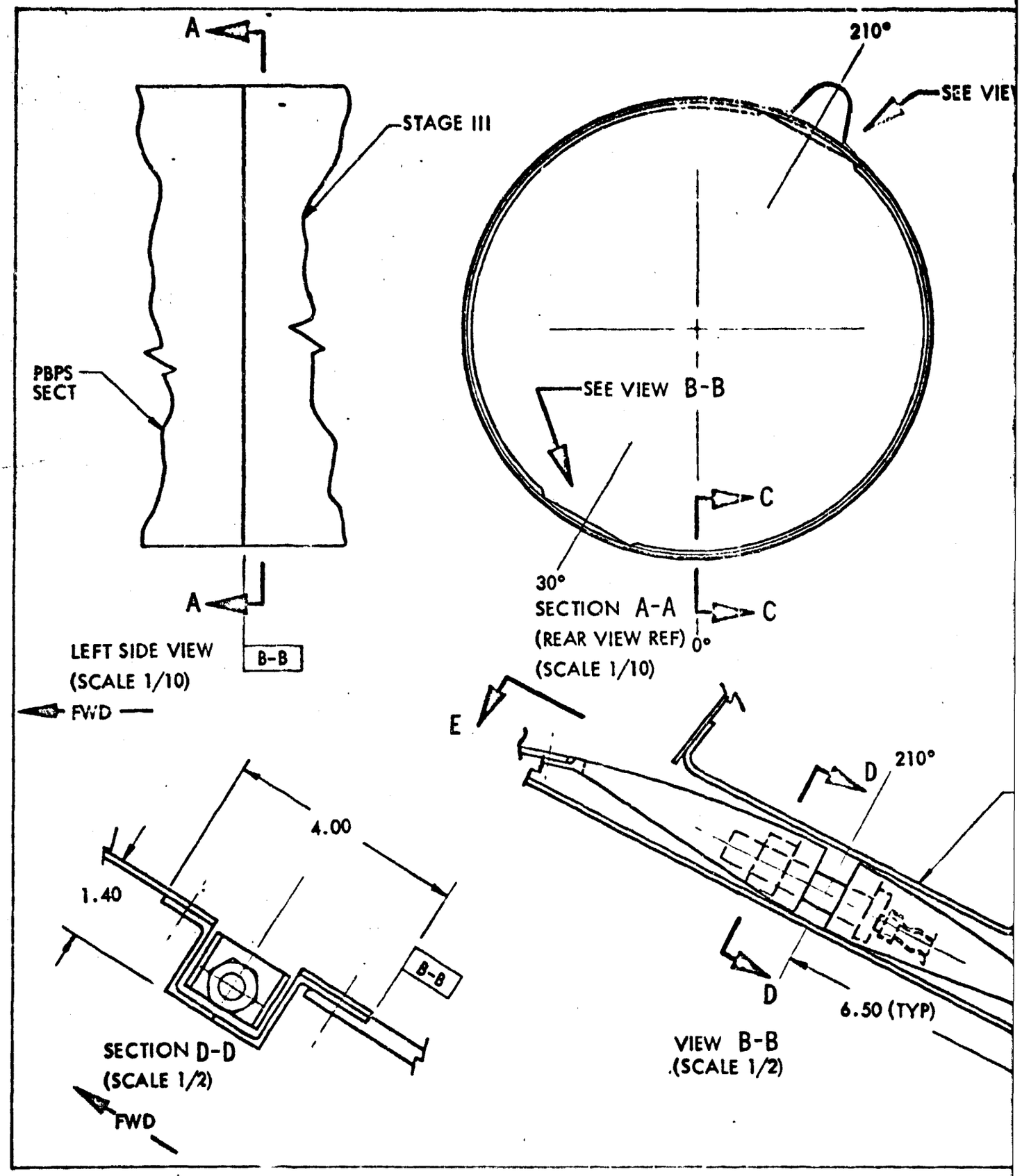
A
STAGE III
PBPS
SECT
A
B-B
LEFT SIDE VIEW
(SCALE 1/10)
FWD
210°
SEE VIEW
SEE VIEW B-B
C
30°
SECTION A-A
(REAR VIEW REF)
0°
C
(SCALE 1/10)
E
D
210°
4.00
1.40
B-B
D
6.50 (TYP)
SECTION D-D
(SCALE 1/2)
VIEW B-B
(SCALE 1/2)
FWD

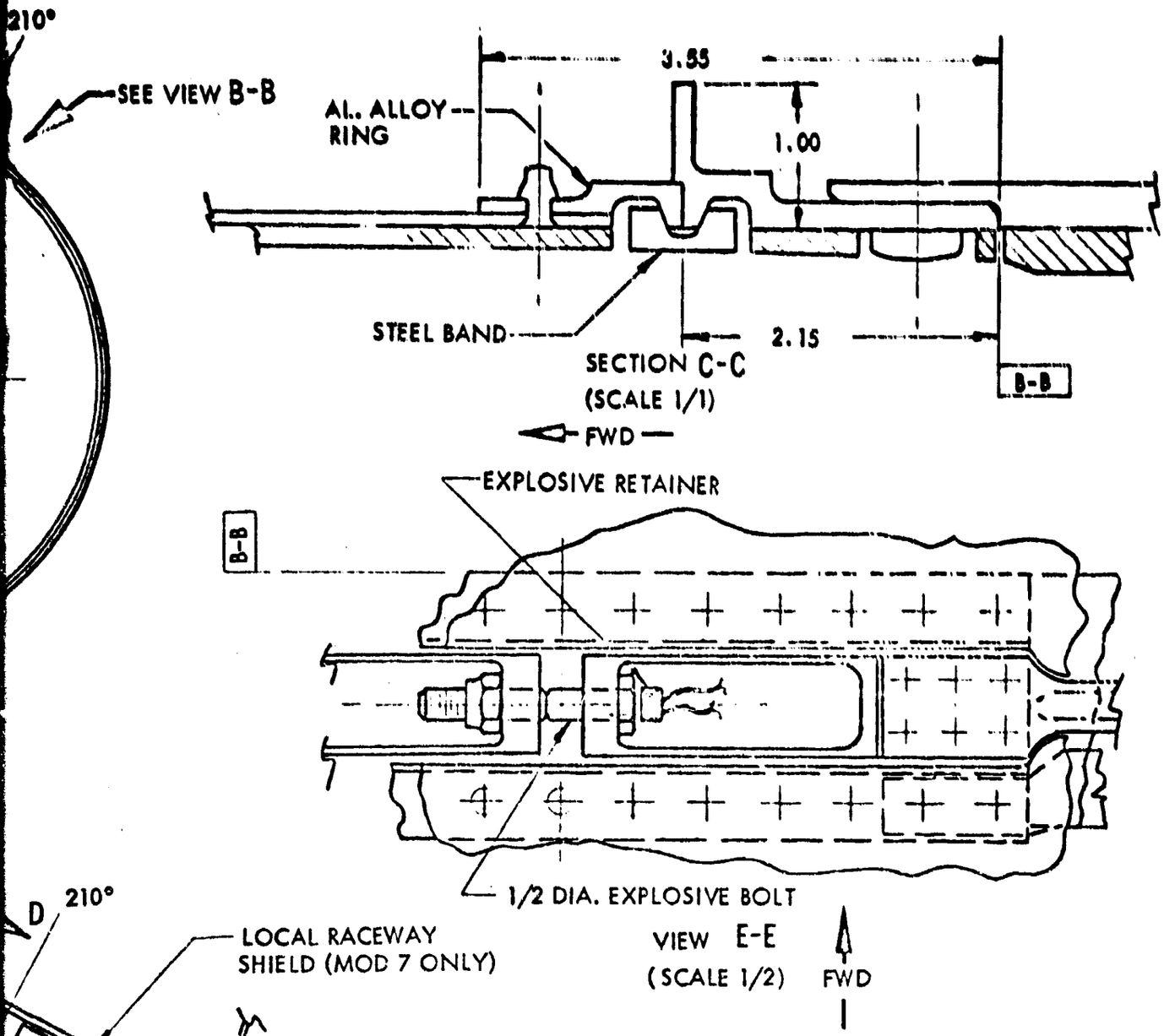

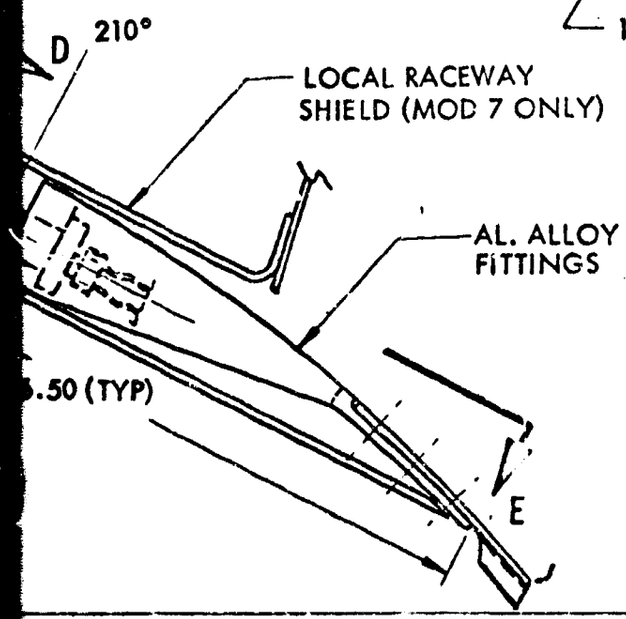

WEIGHT ESTIMATE

BAND	4.2 #
FITTINGS ON BAND	.7 #
EXPLOSIVE BOLT & RETAINER	1.0 #
RING STRUCTURE	7.0 #
LOCAL FITTINGS @ EXPLOSIVE BOLT	1.7 #
10% GROWTH ALLOWANCE	1.4 #
TOTAL WEIGHT	16.0 #

CONFIGURATION 3

FIGURE 3.3-6: EXTERNAL TENSION BAND SEPARATION SYSTEM

2

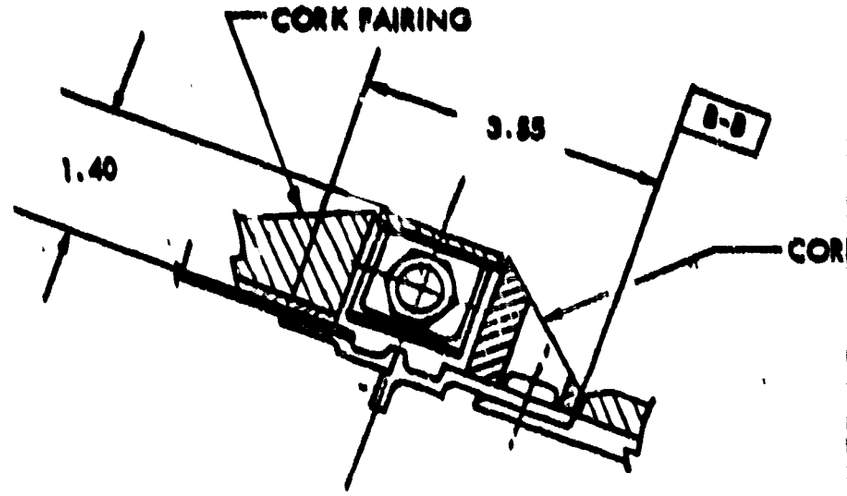

SECTION D-D
(SCALE 1/2)

FWD

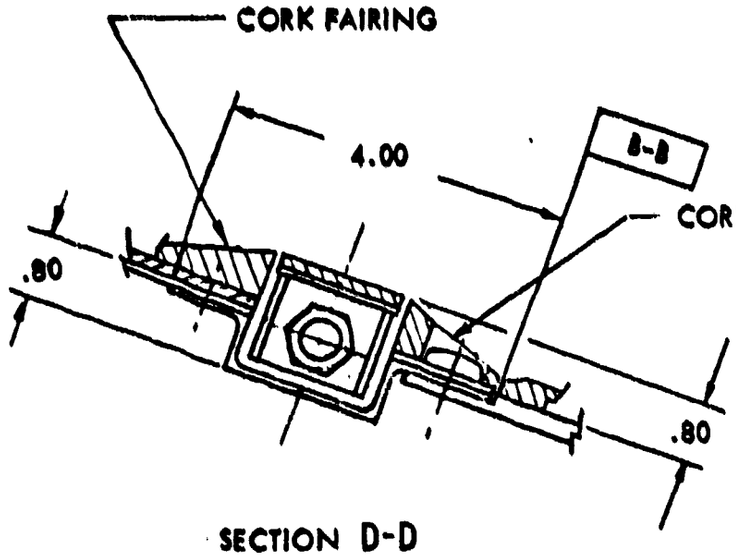

SECTION D-D
(SCALE 1/2)

FWD

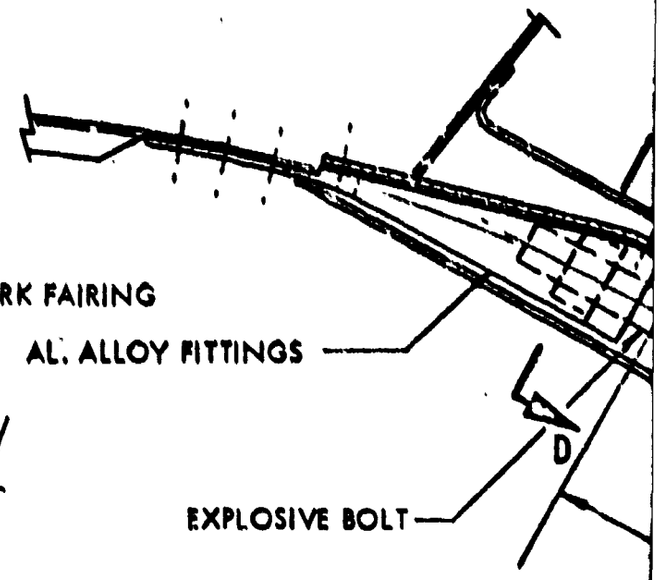

VIEW B-B
(SCALE 1/2)

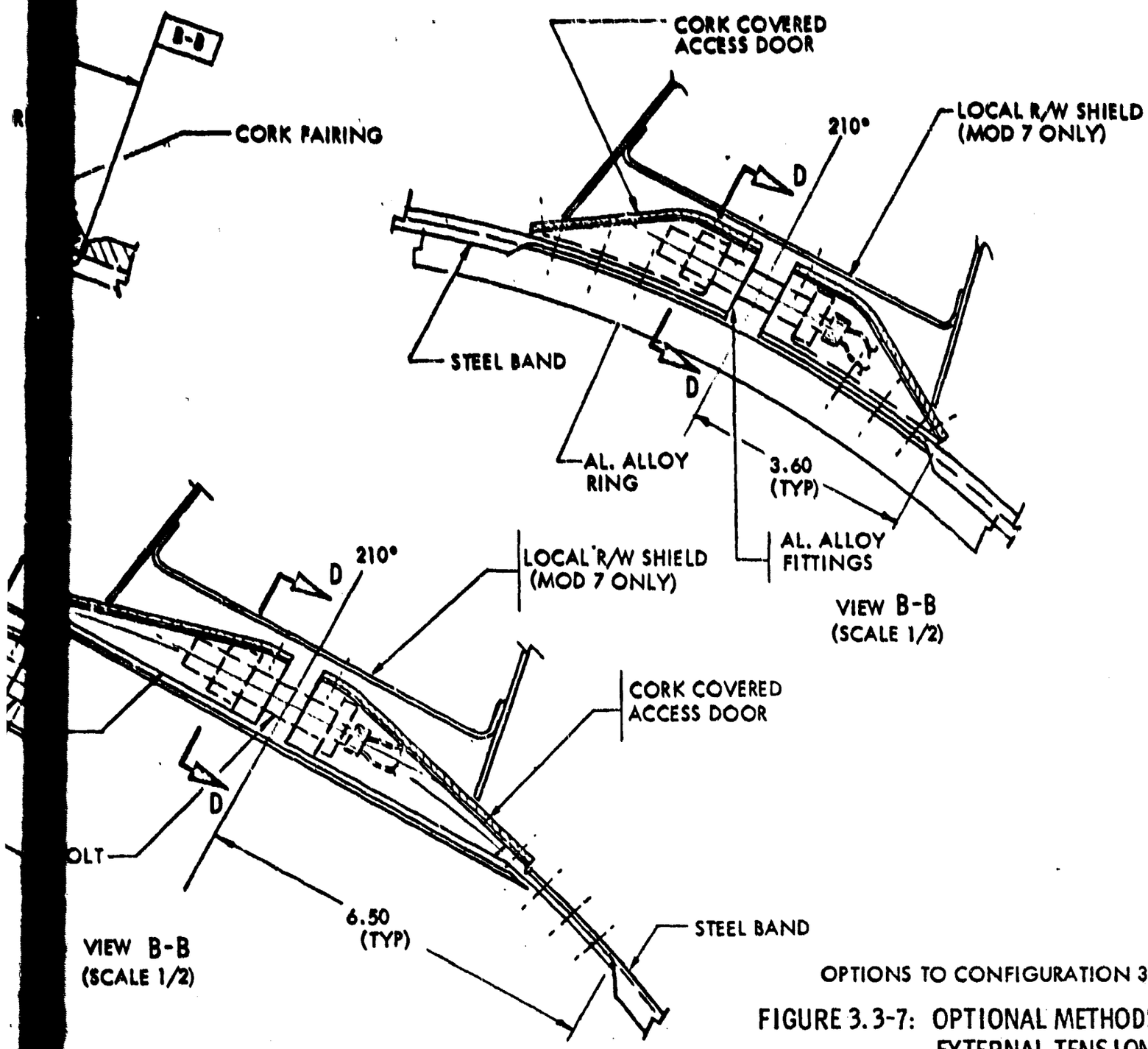

OPTIONS TO CONFIGURATION 3

FIGURE 3.3-7: OPTIONAL METHODS EXTERNAL TENSION BAND SEPARATION SYSTEM

2

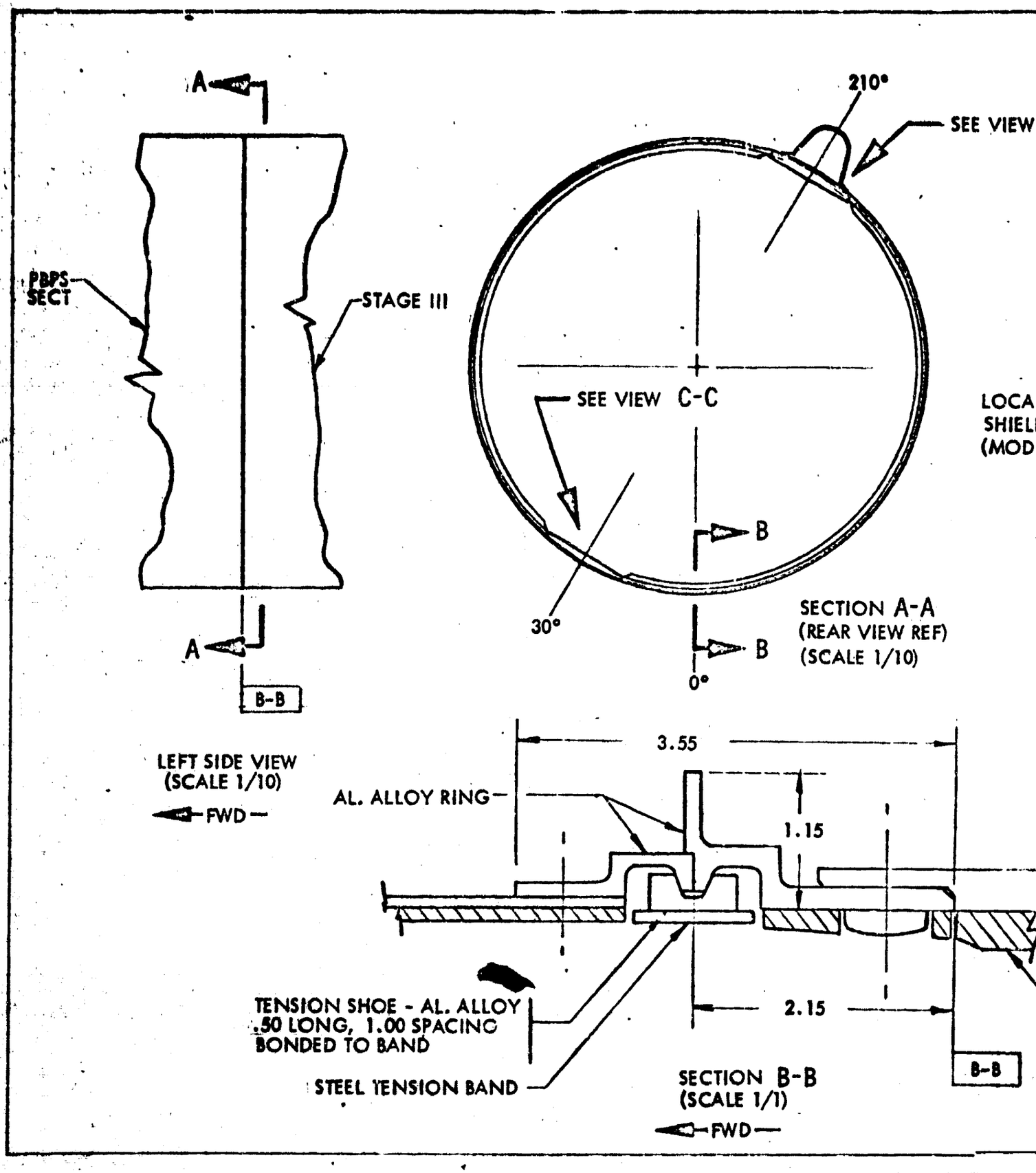
A
PBPS SECT
STAGE III
A
B-B
LEFT SIDE VIEW
(SCALE 1/10)
FWD
210°
SEE VIEW
SEE VIEW C-C
B
30°
B
0°
SECTION A-A
(REAR VIEW REF)
(SCALE 1/10)
LOCA
SHIEL
(MOD
3.55
AL. ALLOY RING
1.15
TENSION SHOE - AL. ALLOY
.50 LONG, 1.00 SPACING
BONDED TO BAND
2.15
STEEL TENSION BAND
SECTION B-B
(SCALE 1/1)
FWD
B-B

2

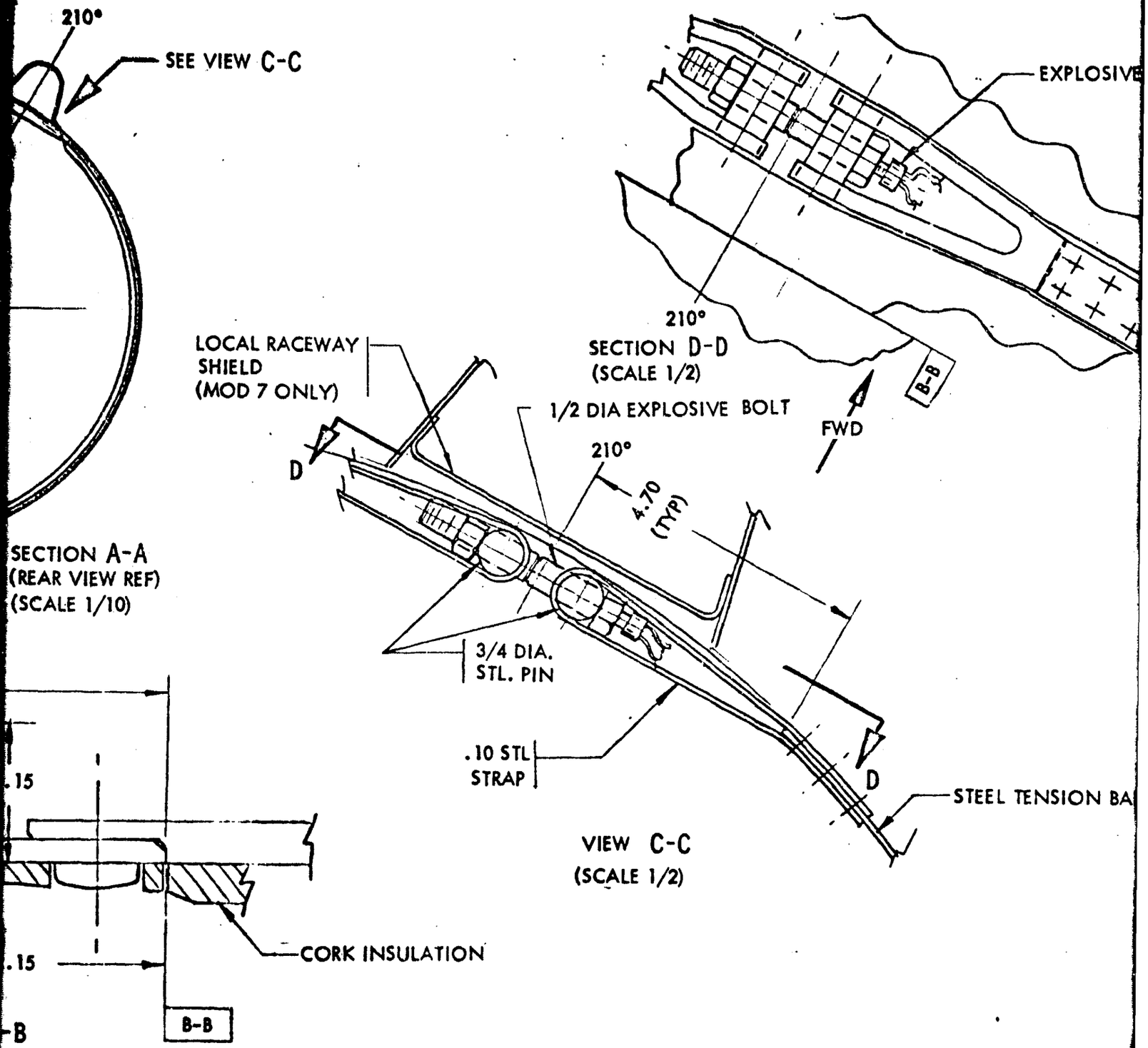
210°
SEE VIEW C-C
SECTION A-A
(REAR VIEW REF)
(SCALE 1/10)
.15
.15
B-B
B-B
CORK INSULATION
EXPLOSIVE
210°
SECTION D-D
(SCALE 1/2)
FWD
LOCAL RACEWAY
SHIELD
(MOD 7 ONLY)
1/2 DIA EXPLOSIVE BOLT
210°
4.70
(TYP)
D
D
3/4 DIA.
STL. PIN
.10 STL
STRAP
STEEL TENSION BA
VIEW C-C
(SCALE 1/2)

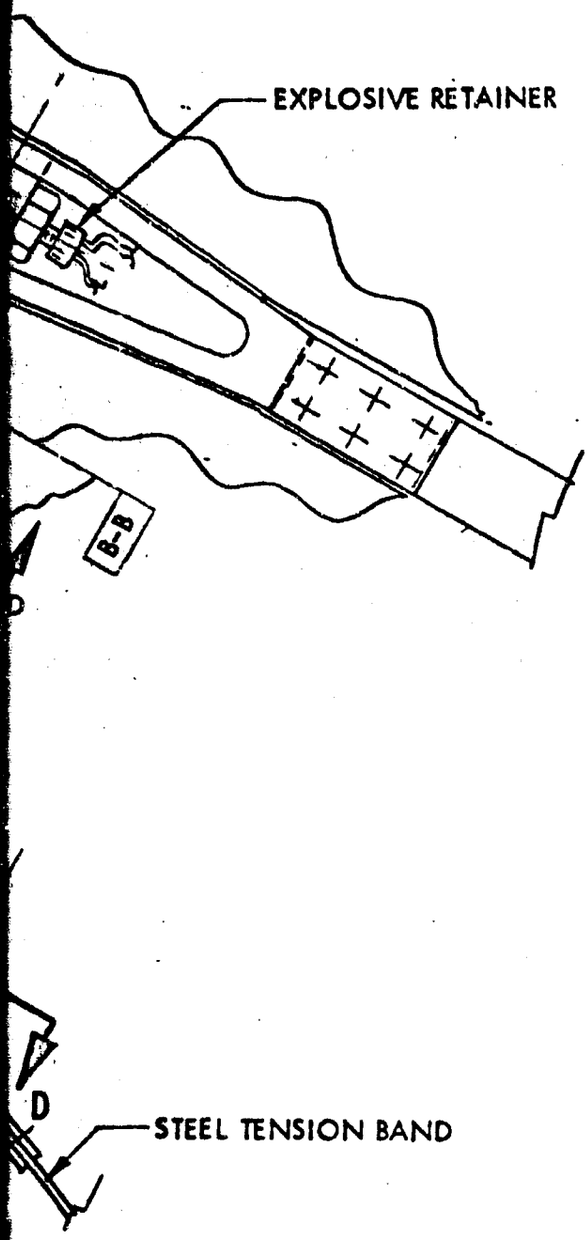

WEIGHT ESTIMATE

BAND & SHOES	3.40
FITTINGS ON BAND	.70
EXPLOSIVE BOLT & RETAINER	1.00
RING STRUCTURE	7.40
LOCAL FITTINGS @ EXPLOSIVE BOLT	1.70
10% GROWTH ALLOWANCE	1.40
TOTAL WEIGHT	15.60

CONFIGURATION 4, 5, & 6

FIGURE 3.3-8: EXTERNAL TENSION BAND SEPARATION SYSTEM

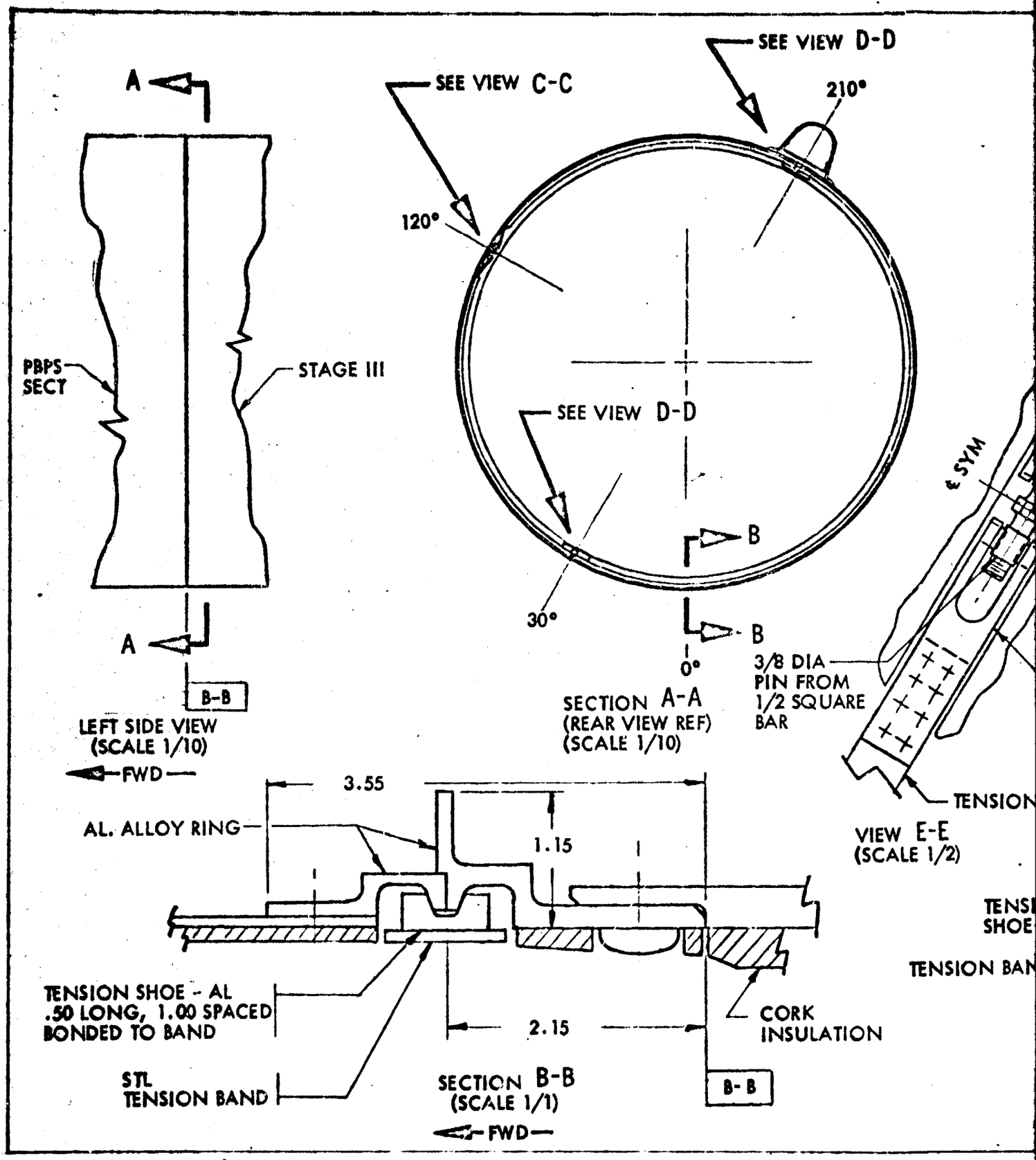
SEE VIEW D-D
SEE VIEW C-C
210°
120°
A
PBPS SECT
STAGE III
SEE VIEW D-D
B
30°
B
0°
A
B-B
LEFT SIDE VIEW (SCALE 1/10)
FWD
SECTION A-A (REAR VIEW REF) (SCALE 1/10)
3/8 DIA PIN FROM 1/2 SQUARE BAR
℄ SYM
TENSION
VIEW E-E (SCALE 1/2)
3.55
AL. ALLOY RING
1.15
TENSI SHOE
TENSION BAN
TENSION SHOE - AL .50 LONG, 1.00 SPACED BONDED TO BAND
2.15
CORK INSULATION
STL TENSION BAND
SECTION B-B (SCALE 1/1)
B-B
FWD

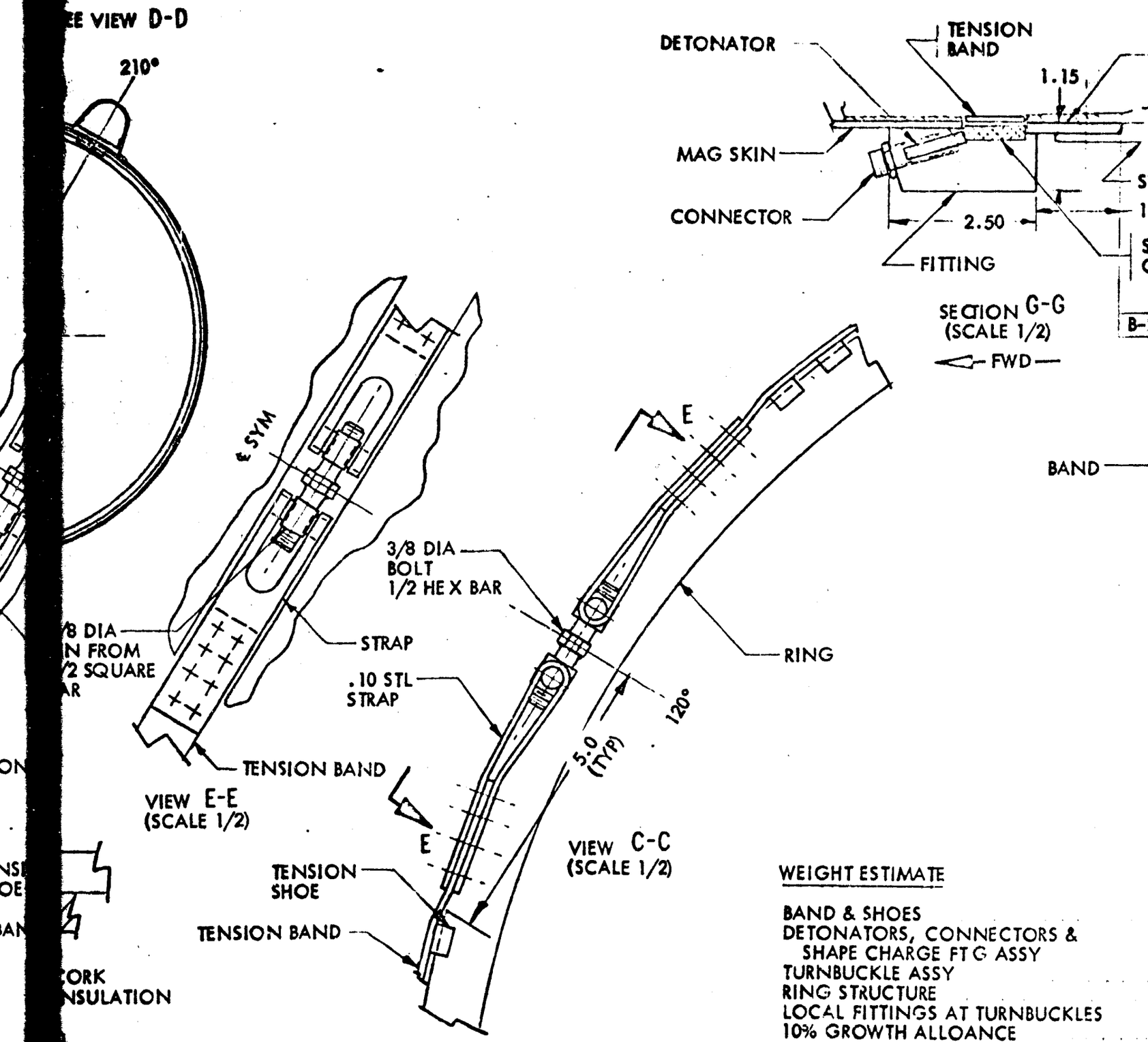

WEIGHT ESTIMATE

BAND & SHOES
DETONATORS, CONNECTORS & SHAPE CHARGE FTG ASSY
TURNBUCKLE ASSY
RING STRUCTURE
LOCAL FITTINGS AT TURNBUCKLES
10% GROWTH ALLOANCE

TOTAL WEIGHT

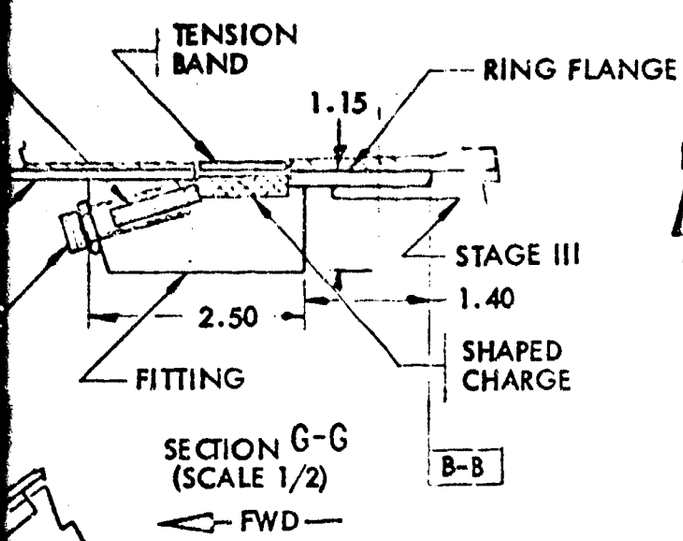

SECTION G-G
(SCALE 1/2)

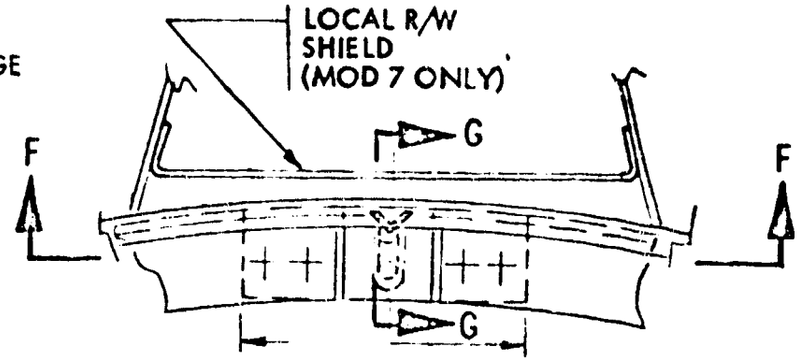

VIEW D-D
(SCALE 1/2)

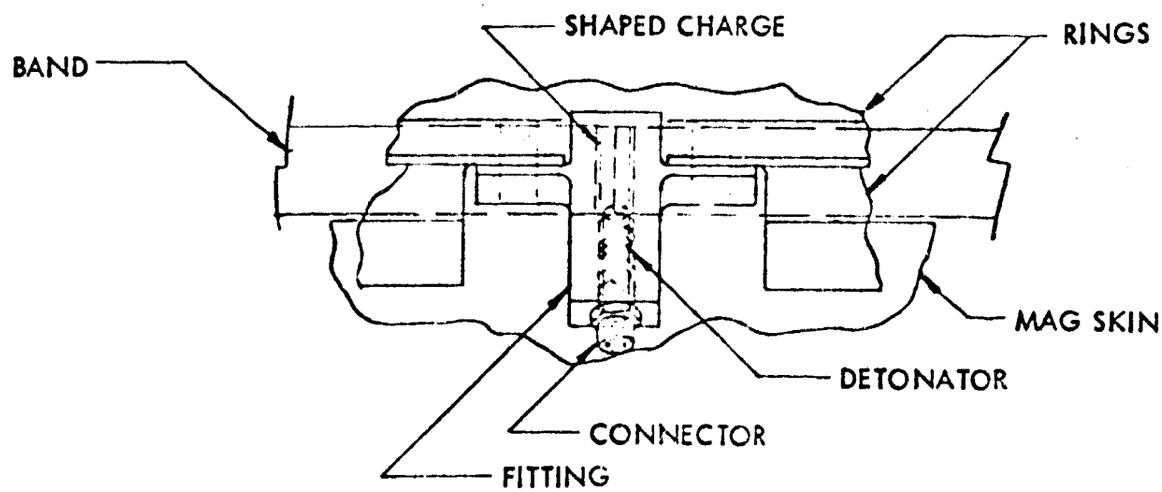

SECTION F-F
(SCALE 1/2) FWD

HT ESTIMATE

D & SHOES	4.1
NATORS, CONNECTORS & APE CHARGE FTG ASSY	2.0
BUCKLE ASSY	1.0
STRUCTURE	6.5
AL FITTINGS AT TURNBUCKLES	1.7
GROWTH ALLOANCE	1.5
TOTAL WEIGHT	16.8

CONFIGURATION 7

FIGURE 3.3-9: EXTERNAL TENSION BAND SEPARATION SYSTEM

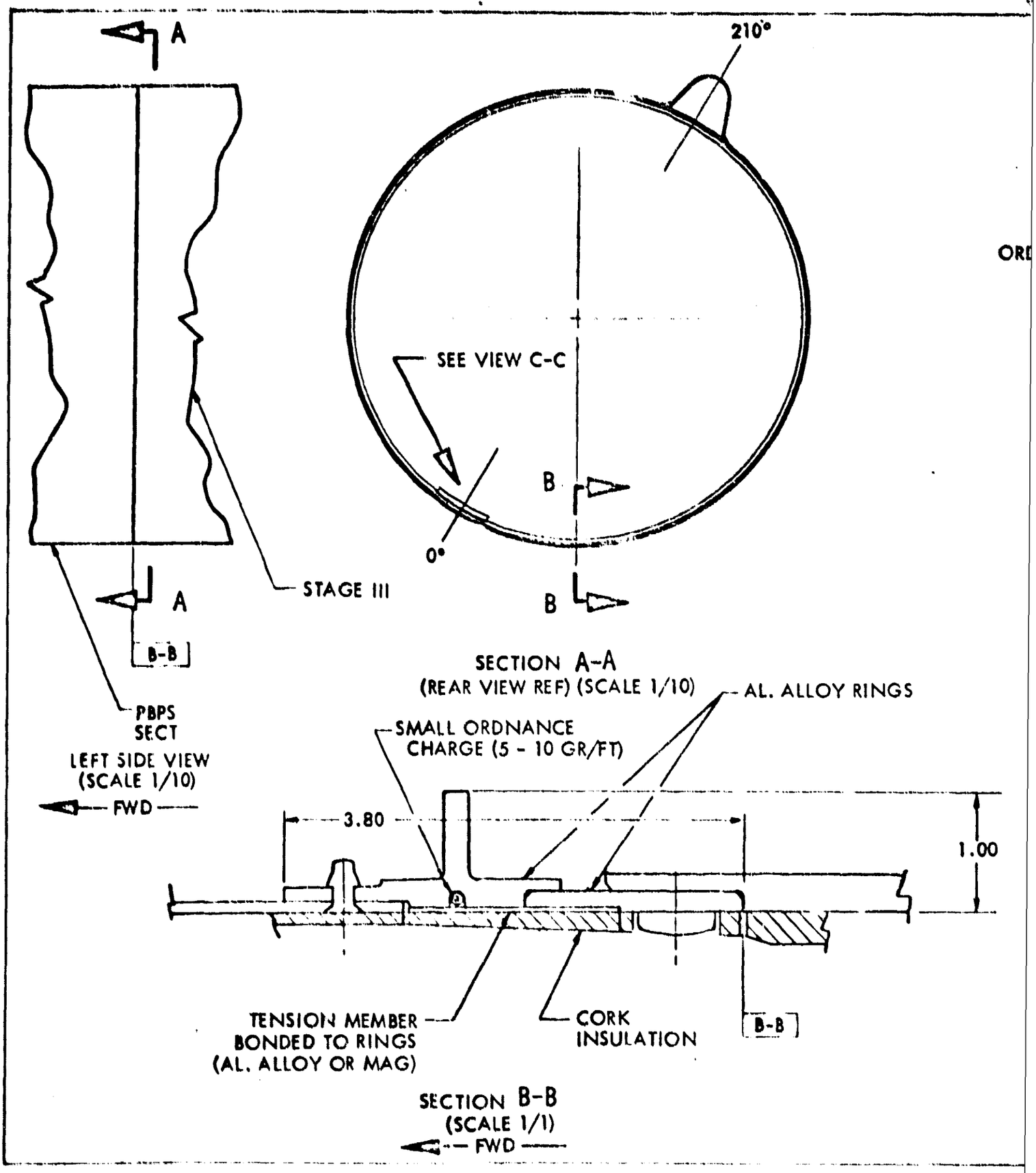
A
210°
ORD
SEE VIEW C-C
B
0°
STAGE III
A
B
B-B
SECTION A-A
(REAR VIEW REF) (SCALE 1/10)
AL. ALLOY RINGS
PBPS
SECT
SMALL ORDNANCE
CHARGE (5 - 10 GR/FT)
LEFT SIDE VIEW
(SCALE 1/10)
FWD
3.80
1.00
TENSION MEMBER
BONDED TO RINGS
(AL. ALLOY OR MAG)
CORK
INSULATION
B-B
SECTION B-B
(SCALE 1/1)
FWD

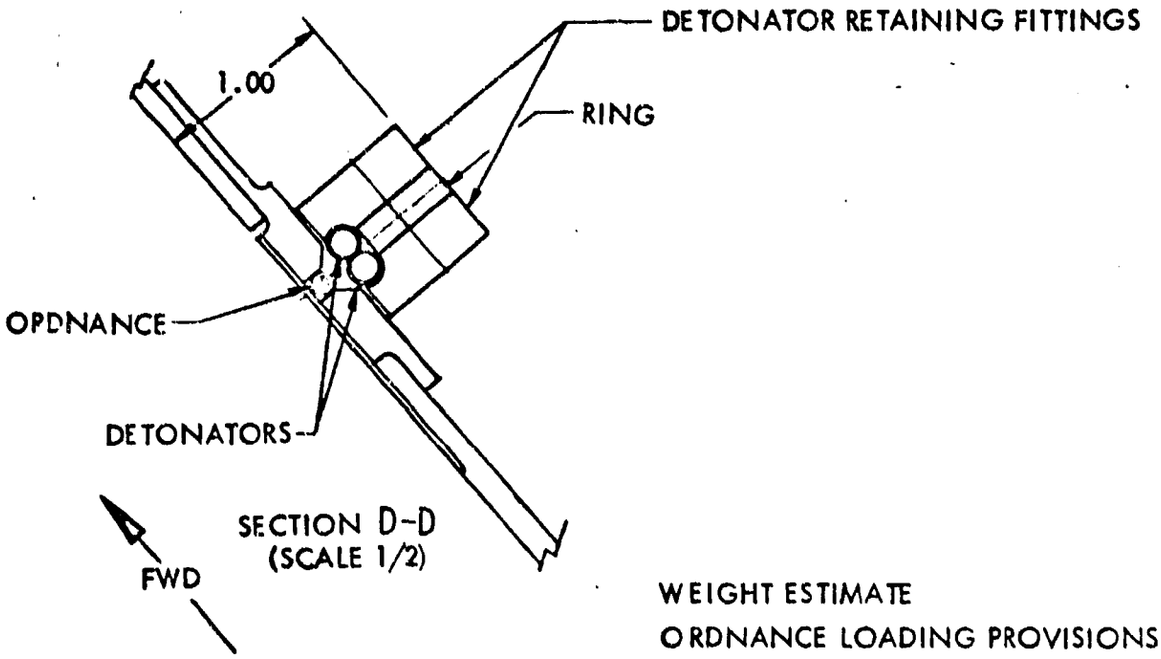

WEIGHT ESTIMATE

ORDNANCE LOADING PROVISIONS	.30
RACEWAY SHIELD	.20
RING STRUCTURE	9.50
ORDNANCE CHARGE	1.40
10% GROWTH ALLOWANCE	1.20
TOTAL WEIGHT	12.60

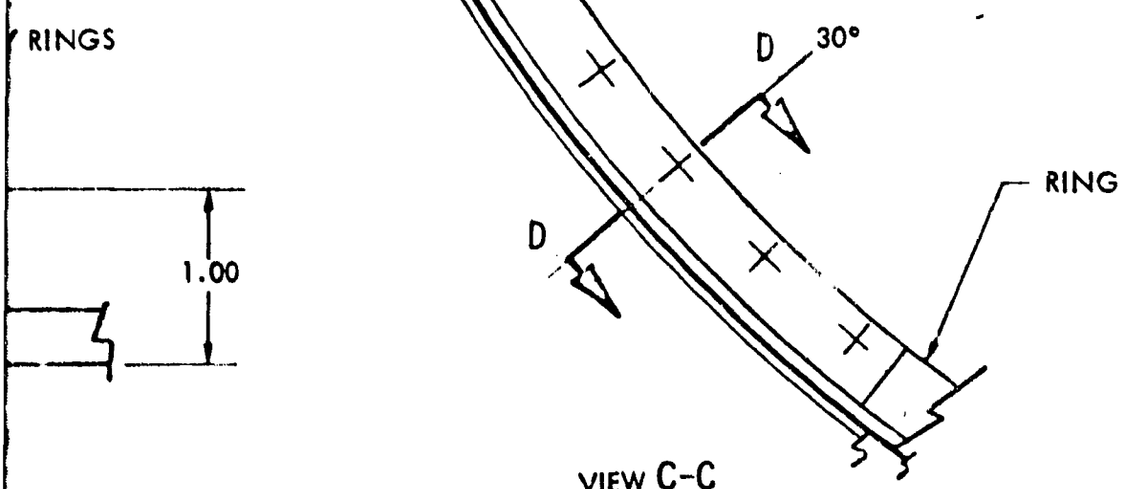

VIEW C-C
(SCALE 1/2)
(DETONATOR LOADING AREA)

CONFIGURATION 10

FIGURE 3.3-10: ORDNANCE RELEASED BONDED SEPARATION JOINT

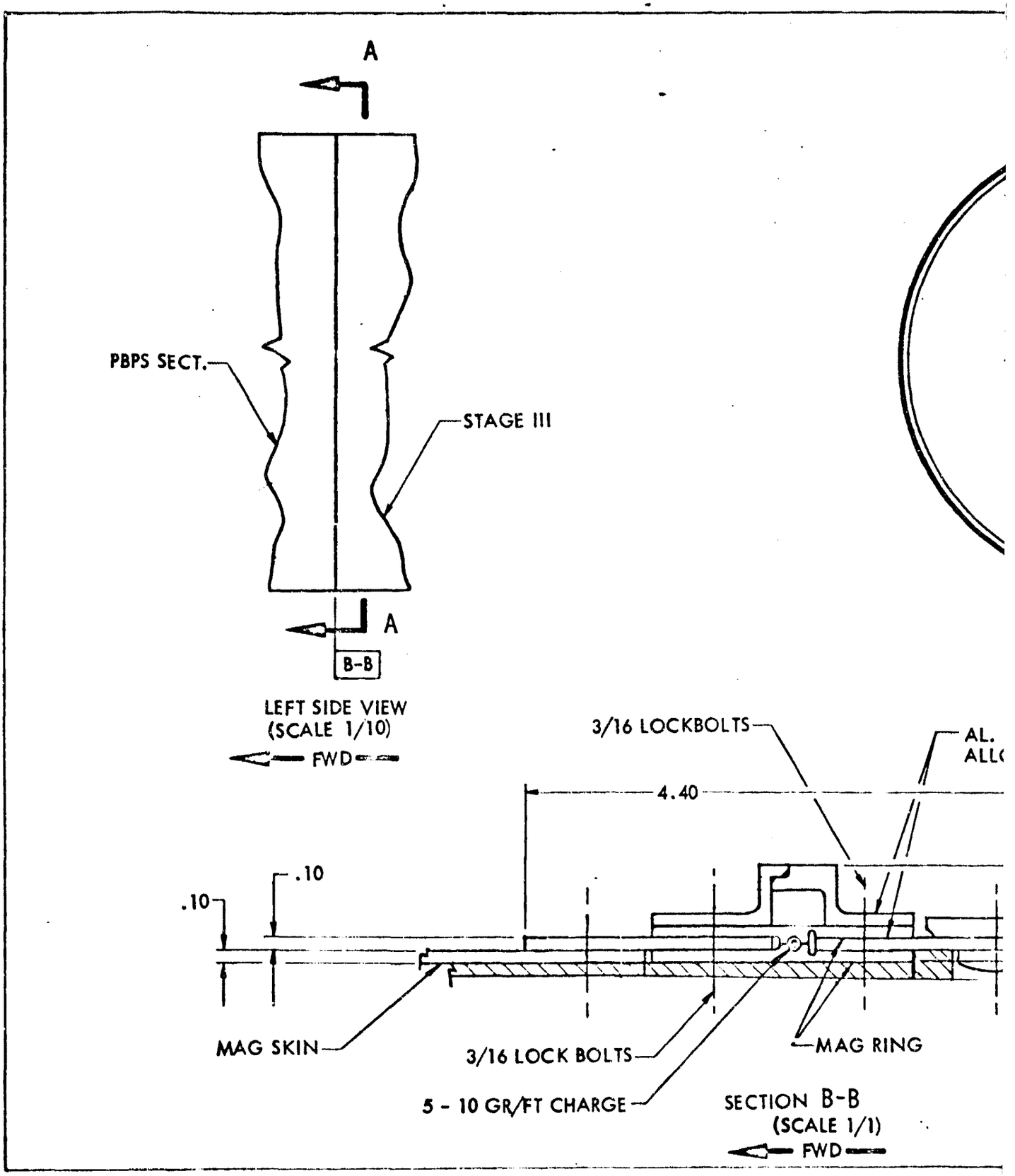
A
PBPS SECT.
STAGE III
A
B-B
LEFT SIDE VIEW
(SCALE 1/10)
FWD
3/16 LOCKBOLTS
AL.
ALL
4.40
.10
.10
MAG SKIN
3/16 LOCK BOLTS
MAG RING
5 - 10 GR/FT CHARGE
SECTION B-B
(SCALE 1/1)
FWD

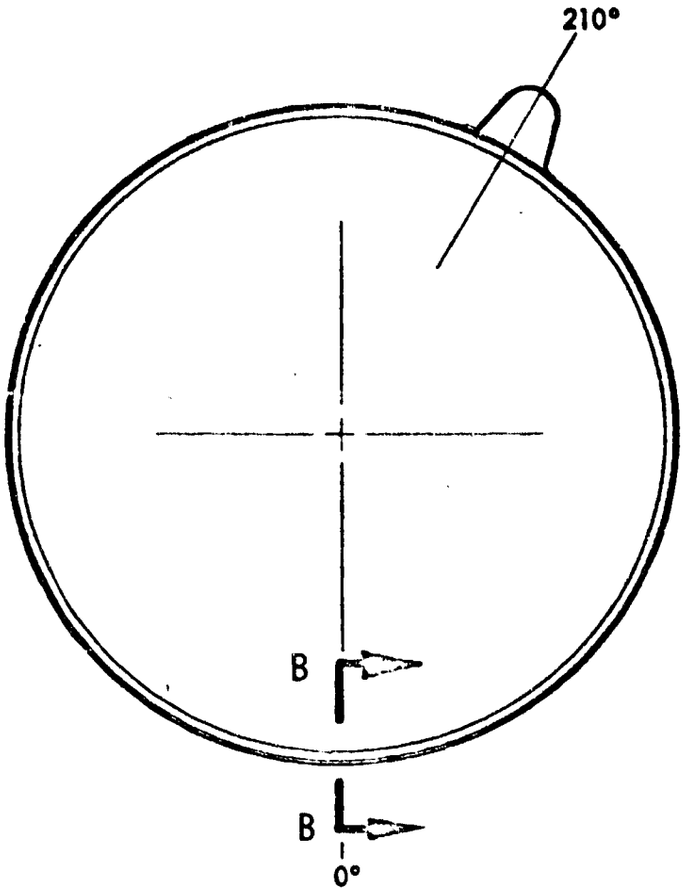

SECTION A-A
(REAR VIEW REF) (SCALE 1/10)

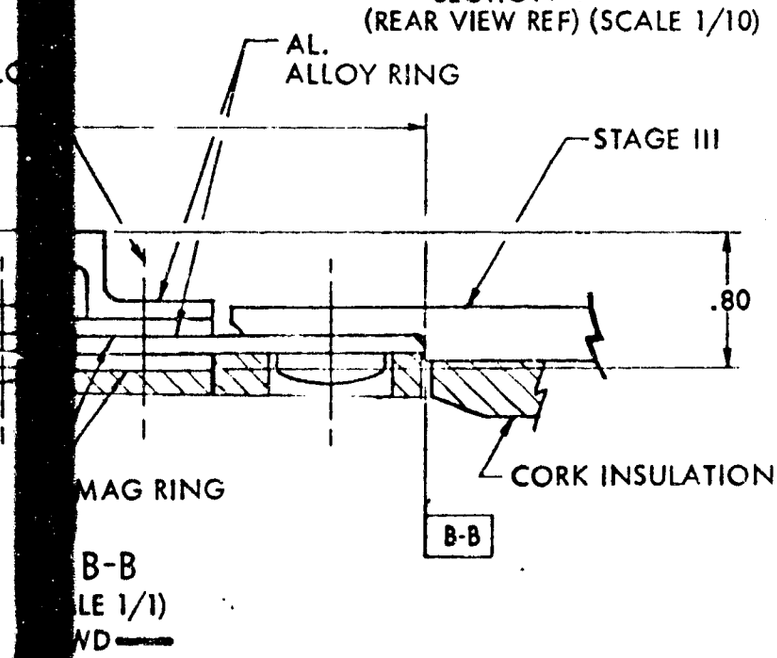

WEIGHT ESTIMATE

AL. ALLOY RINGS	8.6
MAG RINGS	3.3
ORDNANCE CHARGE	.4
LOCK BOLTS	2.0
ORDNANCE LOADING DOOR	.8
10% GROWTH ALLOWANCE	1.5
TOTAL WEIGHT	16.6

CONFIGURATION 11

FIGURE 3.3-11: LOW SHOCK ORDNANCE SEPARATION SYSTEM

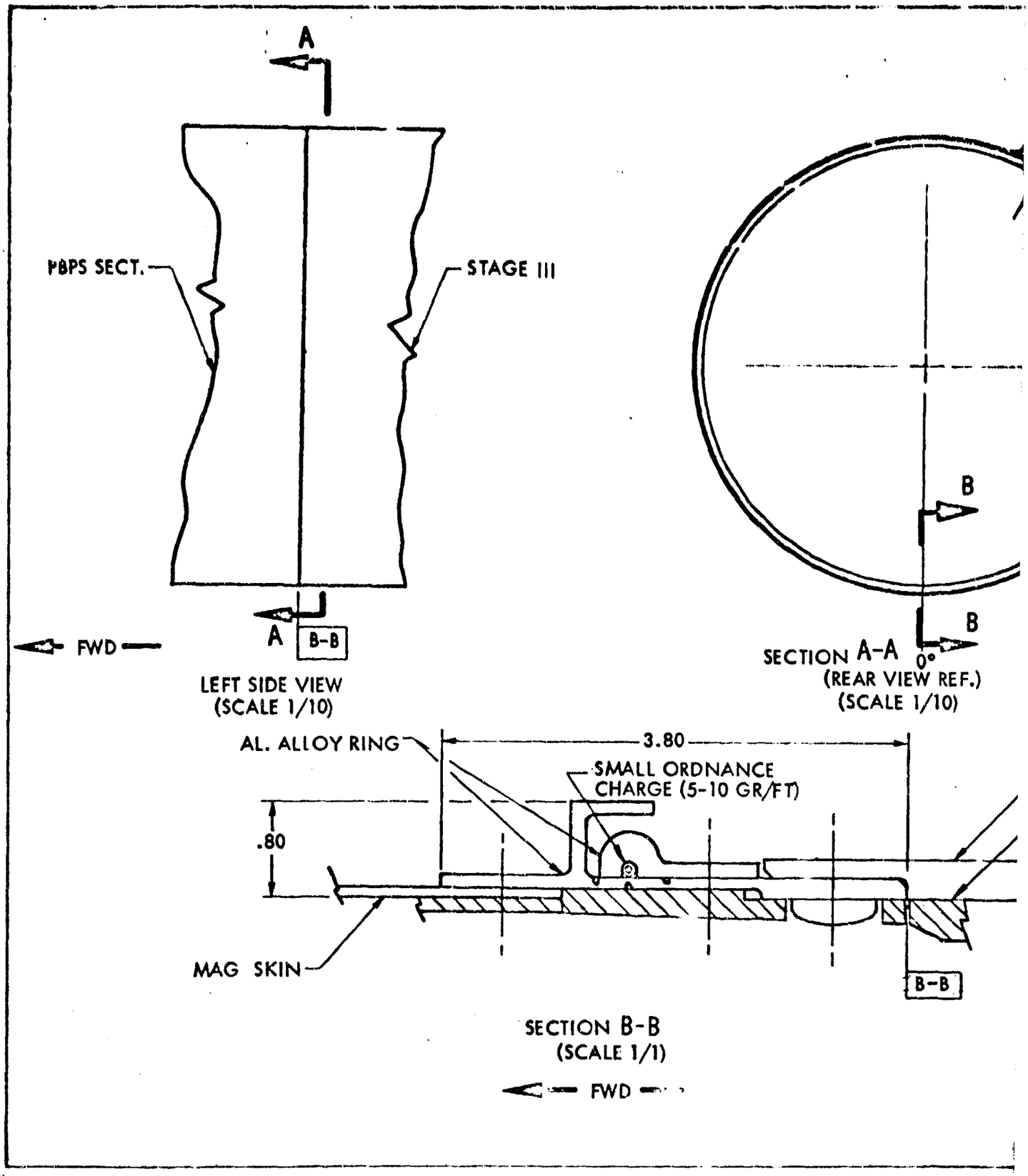
A
PBPS SECT.
STAGE III
A
B-B
FWD
LEFT SIDE VIEW
(SCALE 1/10)
B
B
SECTION A-A
0°
(REAR VIEW REF.)
(SCALE 1/10)
AL. ALLOY RING
3.80
SMALL ORDNANCE
CHARGE (5-10 GR/FT)
.80
MAG SKIN
B-B
SECTION B-B
(SCALE 1/1)
FWD

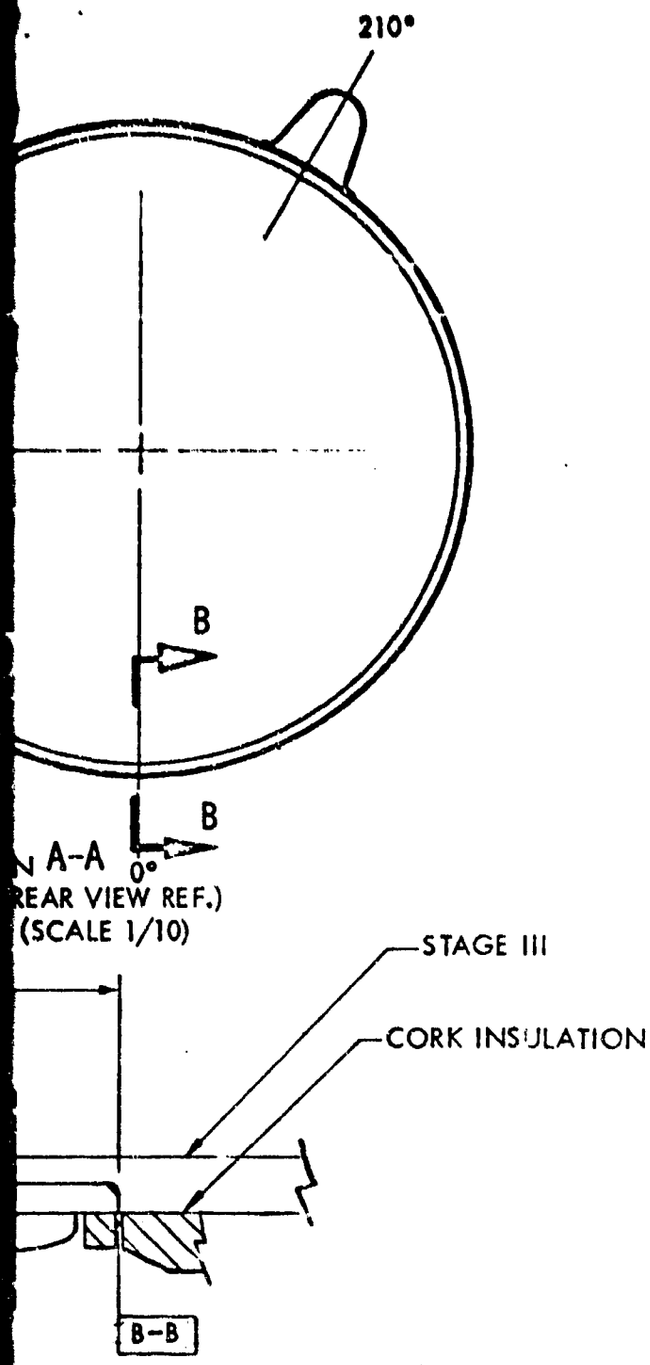

WEIGHT ESTIMATE	
RING STRUCTURE	9.5
ORDNANCE & LOADING PROV.	.8
AFT LOCK BOLTS	1.4
10% GROWTH ALLOWANCE	1.2
TOTAL WEIGHT	12.9

CONFIGURATION 12

FIGURE 3.3-12: REVISED LINEAR ORDNANCE SEPARATION SYSTEM

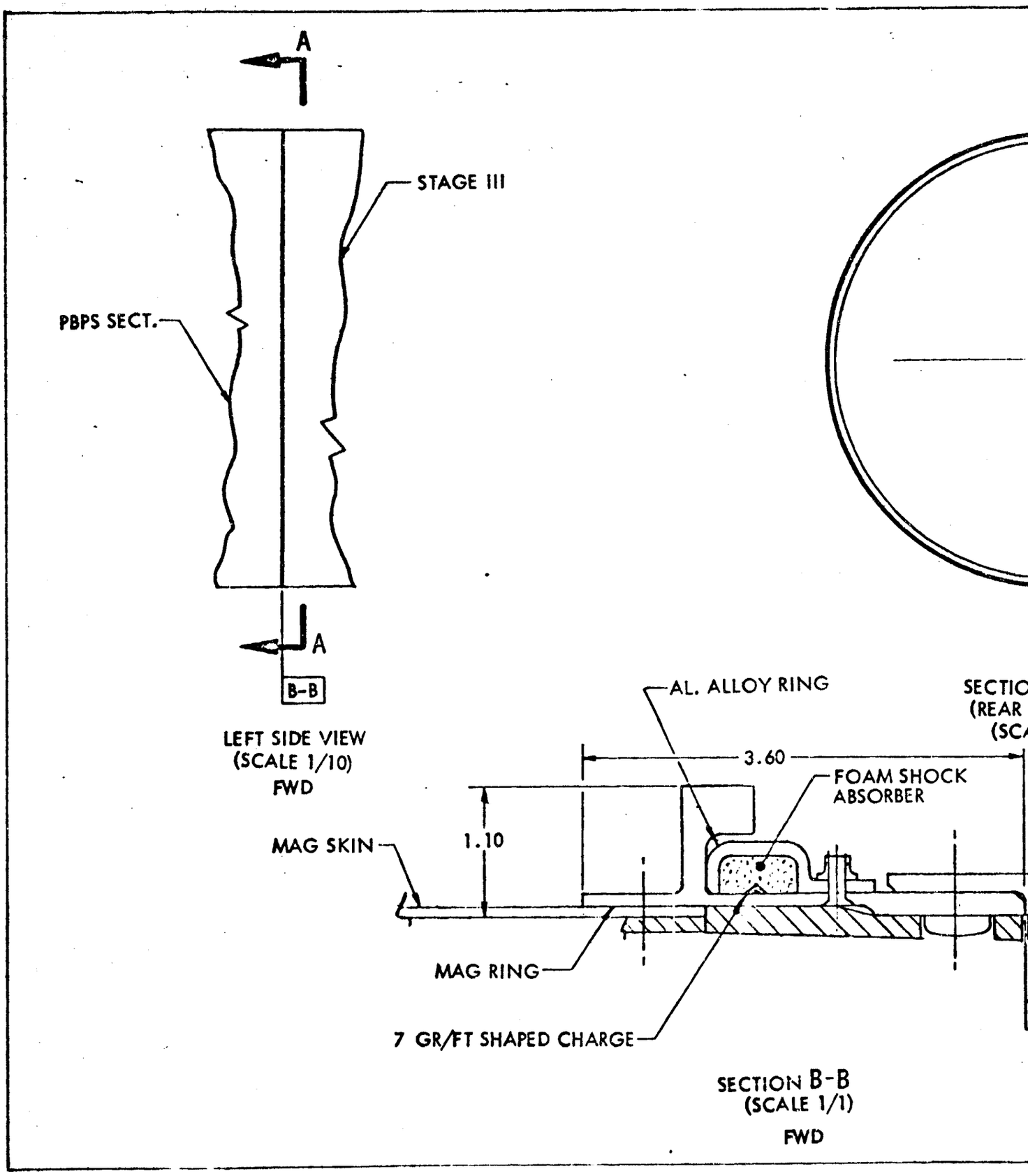
A
STAGE III
PBPS SECT.
A
B-B
LEFT SIDE VIEW
(SCALE 1/10)
FWD
AL. ALLOY RING
3.60
FOAM SHOCK
ABSORBER
1.10
MAG SKIN
MAG RING
7 GR/FT SHAPED CHARGE
SECTION B-B
(SCALE 1/1)
FWD

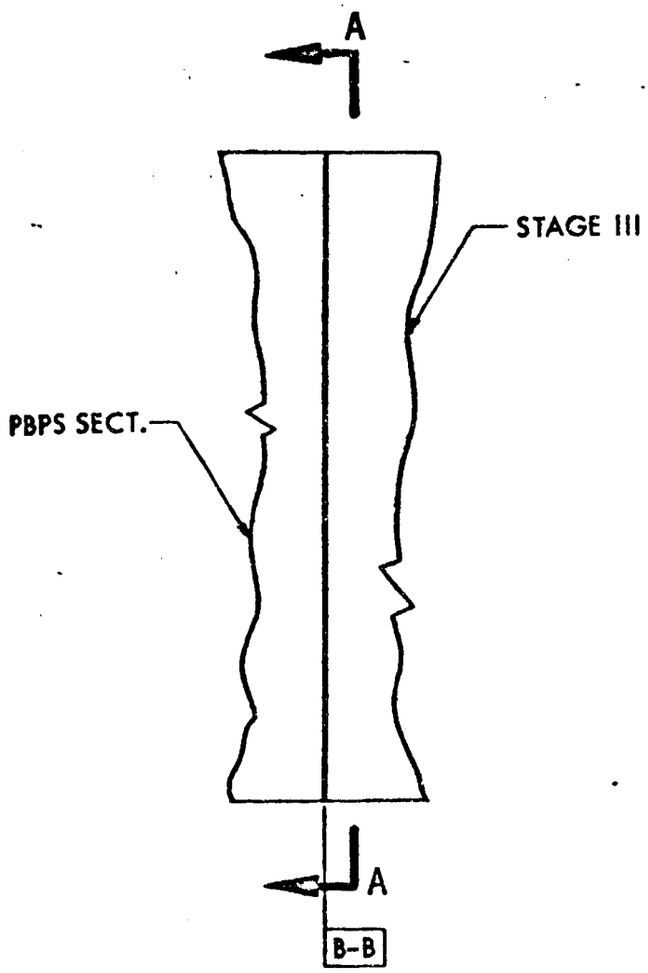

LEFT SIDE VIEW
(SCALE 1/10)
FWD

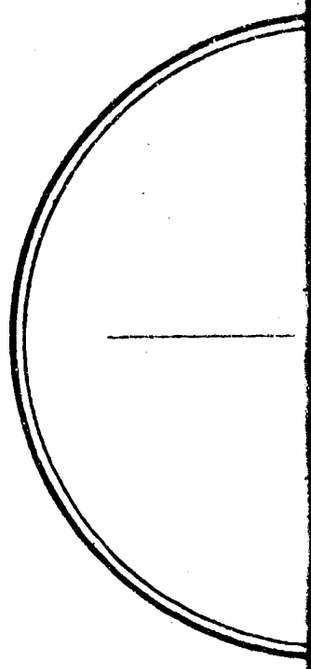

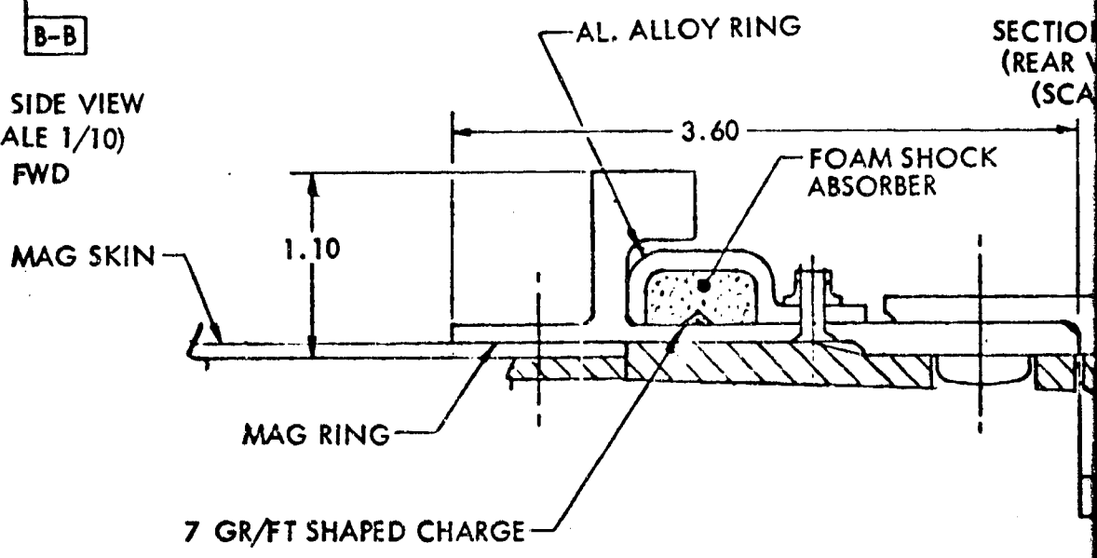

SECTION B-B
(SCALE 1/1)
FWD

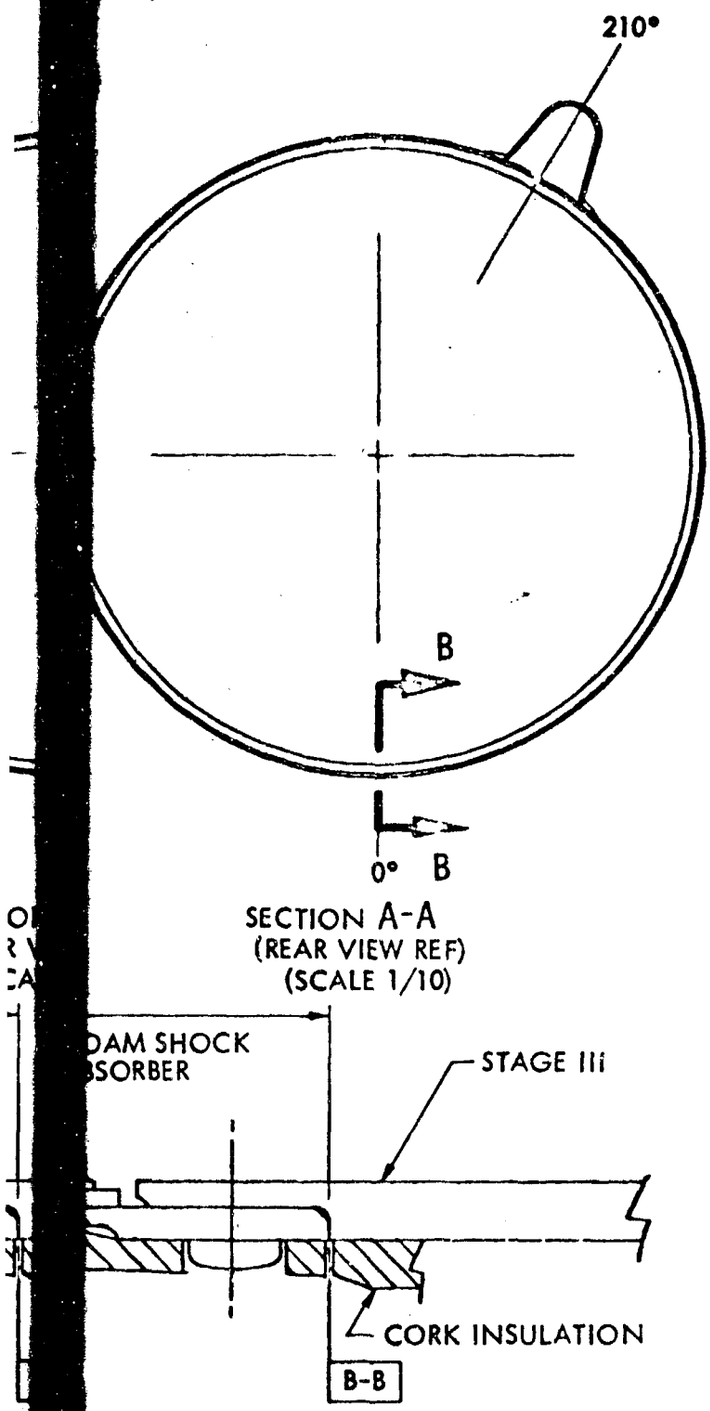

WEIGHT ESTIMATE

RING STRUCTURE	5.3
ORDNANCE & LOADING	1.2
SCREWS & NUTPLATES	1.2
RETAINER FITTING	2.4
10% GROWTH ALLOWANCE	1.0
TOTAL WEIGHT	11.1

CONFIGURATION 13

FIGURE 3.3-13: SHAPED CHARGE ORDNANCE SEPARATION SYSTEM

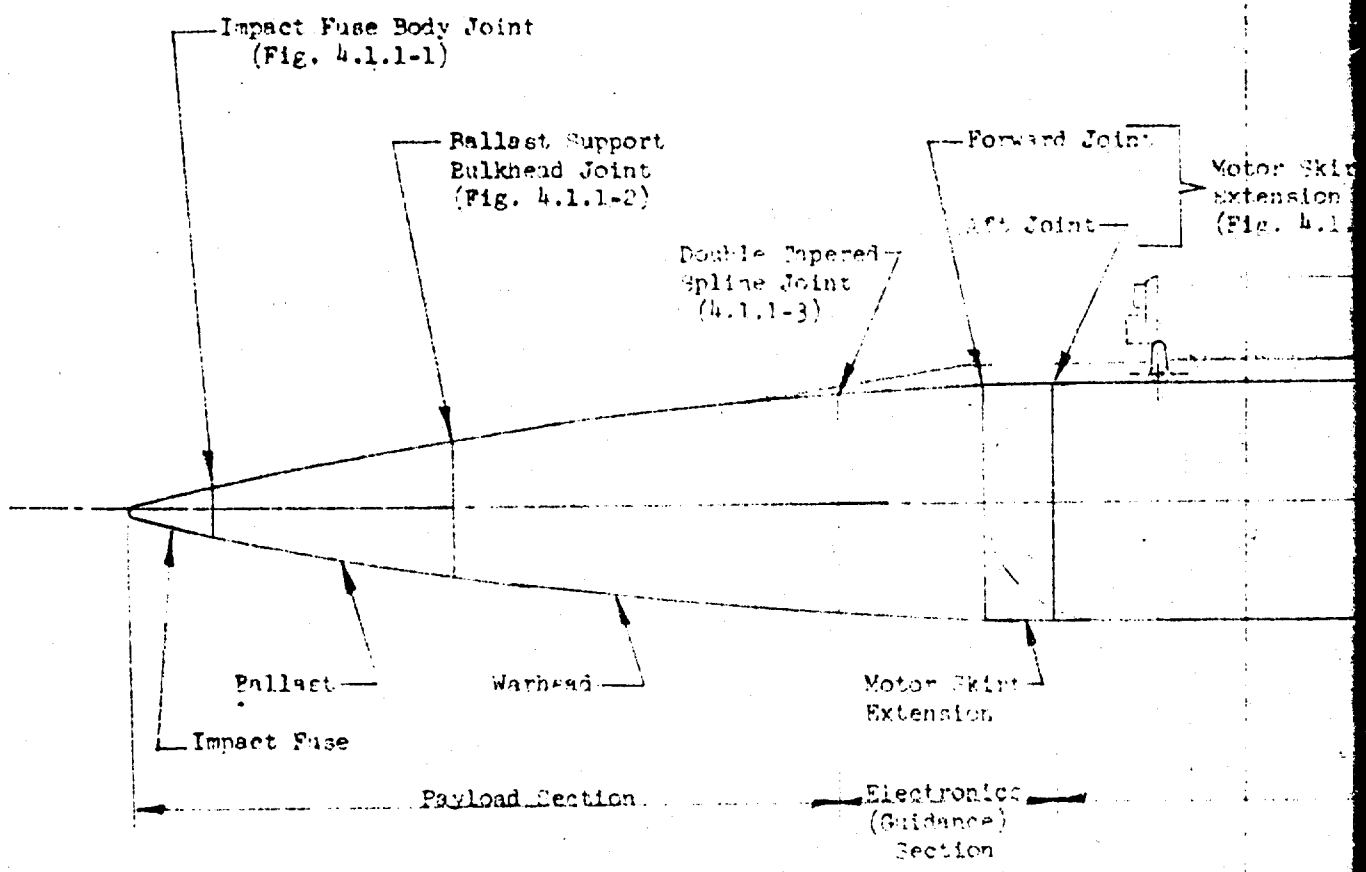

AGM-69A, SECTION A

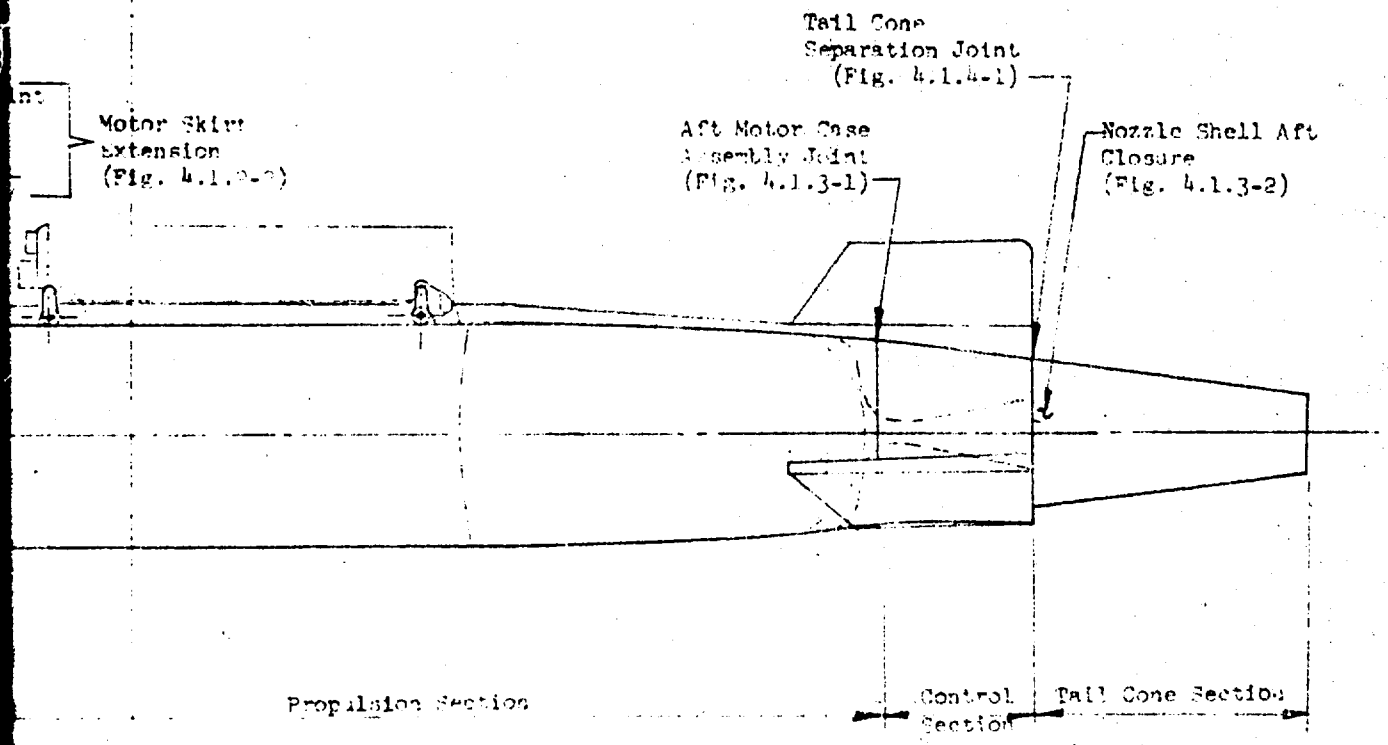

-PA, SECTION AND JOINT LOCATIONS

FIGURE 4.1

4. SMALL MISSILE JOINTS

To facilitate the task of the designer whose joint concept application is limited to the non-strategic missiles, this section is restricted to joint designs for missiles of 40 inch diameter or less.

Because so much of the total effort of missile design involves this size range, this section permits the designer to investigate joint concepts related by design loads, function and environmental considerations similar to his own requirements exclusive of the larger strategic vehicles.

A look in greater depth than usual, is taken at the joints used on AGM-69A, both because it represents current developments in the state-of-the-art and because it provides an overall picture of an approach to joint design as applied to a particular vehicle.

Supplementing the AGM-69A concepts, are representative joints used on other tactical and research missiles.

4.1 AGM-69A JOINT DESIGN

The AGM-69A was configured into four sections to facilitate manufacture, assembly and maintenance. These sections are the Payload, Guidance, Propulsion and Control sections (Reference Figure 4.1).

4.1.1 THE PAYLOAD SECTION

This section, of monocoque construction, is provided a circumferential ring at each of three separation joints. Its structural parts are:

1. Impact Fuse Body
2. Forward Nose Shell
3. Warhead Section

4.1.1.1 IMPACT FUSE BODY JOINT (Figure 4.1.1-1)

The Impact Fuse Body interfaces with the Forward Nose Shell. The aft end of the fuse body has external interrupted threads to permit installation and removal from the Forward Nose Shell by rotating the impact fuse a quarter turn.

USE FOR TYPEWRITTEN MATERIAL ONLY

4.1.1.1 (Continued)

Riveted to the forward end of the Forward Nose Shell is a steel ring designed to accept the impact fuse interrupted threads. The ring is assembled to the shell using a sealant on the faying surfaces and fastened with monel rivets installed using a wet primer. A nylon insert is installed in a longitudinal groove in the steel ring for locking the impact fuse.

The joint is sealed by means of a synthetic rubber O-ring located in an annular groove provided at the base of the fuse body. Fuse body is torqued to 96 to 110 inch pounds.

USE FOR TYPEWRITTEN MATERIAL ONLY

USE FOR DRAWING AND HANDPRINTING — NO TYPEWRITTEN MATERIAL

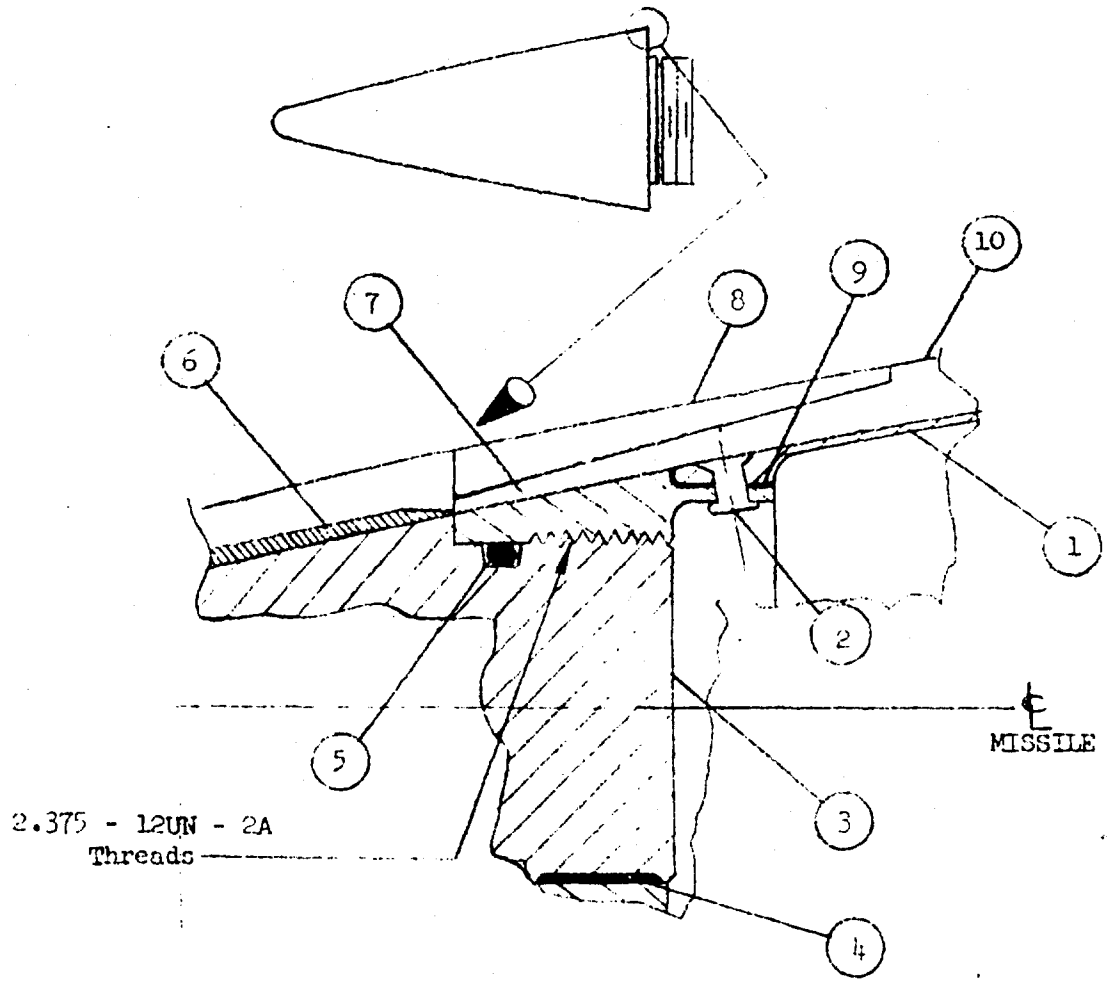

Scale: None

For Materials Data See Table 4.1.-1

IMPACT FUSE BODY JOINT

Reference: AGM-69A Program
DCAGM 20151-1, Para. 4.2.1

Figure 4.1.1-1

A. PART NAME/NUMBER	MATERIAL
(1) Shell, Nose Section (25A28299-101-11)	2024-0 Aluminum QQ-A-250/4 H.T. -T62
(2) Monel Rivet (8 places)	MS 20427 MS
(3) Impact Fuse Body (20A11411-130-11)	2024-T4 Aluminum
(4) Front Nose Ring Insert (26A13536-101-11)	General Purpose Nylon 6/6 Per L-P-410
(5) "O" Ring	MS 28775-140
(6) Radar Absorber (25A24020)	Radar Absorber STB 8-140
(7) Forward Nose Section Ring (29A17189-101-11)	4330M, MIL-S-8699 Normalized & Tempered R.H. C33 MAX H.T. 160-180 Ksi
(8) Collar, Thermal Nose Cap (26A13566-101-11)	Reinforced Phenolic Molding BMS 8-72
(9) Sealant	MIL-S-8802 or BMS 5-44
(10) External Insulation	93-078 Silicone Rubber W/7% Quartz Micro Crystals Dow-Corning Corp.

B. DESIGN CONSIDERATIONS - Critical load condition is terminal maneuver for limit load

a. Bending Stress = [1]

b. Shear Stress = [1]

[1] Reference D2AGM20162-1, Sheet 5070

Table 4.1-1

USE FOR TYPEWRITTEN MATERIAL ONLY

4.1.1.2 BALLAST SUPPORT BULKHEAD JOINT (Fig. 4.1.1-2)

To the inside of the forward flange of the circumferential Forward Warhead Ring is bolted the Ballast Support Bulkhead Ring. Three 1/4 inch diameter shear bolts are assembled through the ballast and warhead bulkhead flanges only, and fifteen are assembled through the nose section shell as well. Nut plates are riveted to the inside of the ballast support bulkhead ring to receive these bolts. About the outside surface of the aft flange of the Forward Warhead Ring, is riveted the Warhead Section Shell using 24 monel rivets. Access to the eighteen bolt fasteners is provided by a plug in the silicone insulation over the bolt heads.

USE FOR TYPESETTING MATERIAL ONLY

U.S. ARMY 1434 REV. 8-65

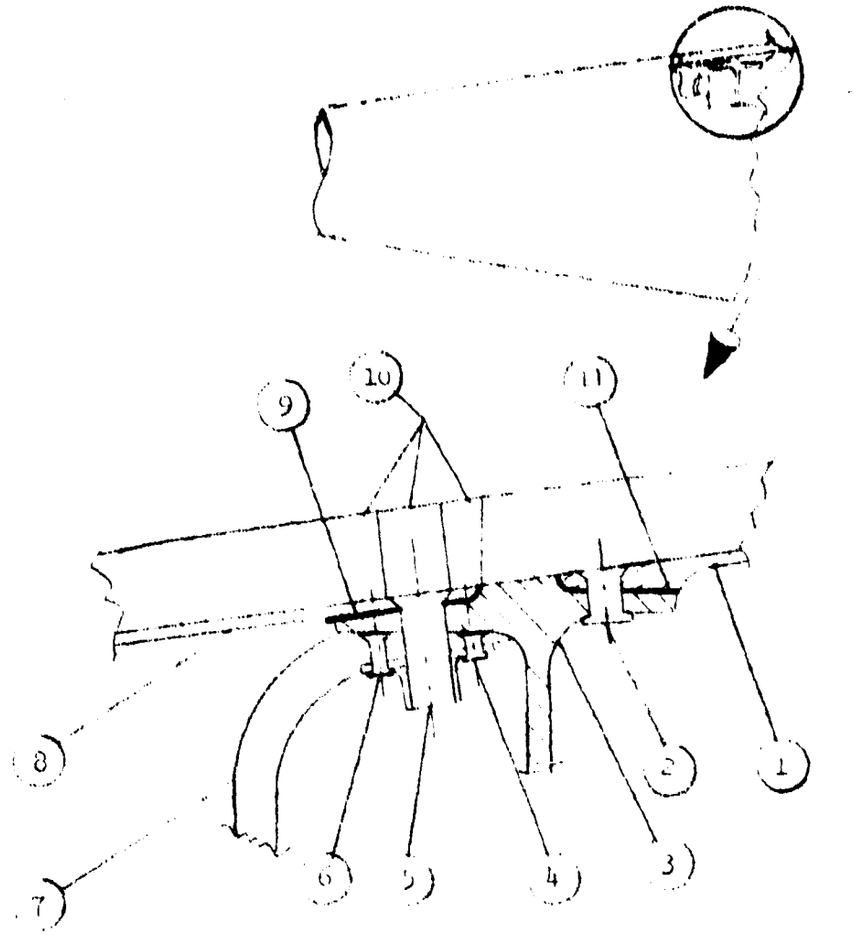

Scale: None

For Design Considerations & Materials
Data see Table 4.1-2

BALLAST SUPPORT BULKHEAD JOINT

References: AGM-69A Program
D2 AGM20151-1, Para. 4.2.3

Figure 4.1.1-2

USE FOR DRAWING AND HANDPRINTING — NO TYPEWRITTEN MATERIAL

MATERIALS

1	Shell, Warhead Section	2024-0 Aluminum QQ-A-250/4 H.T. -T62
2	Rivet (24 places)	MS 204-27M6
3	Ring, Fwd Warhead Section, Station 34.70 (25A29548)	7075-T73 Aluminum BMS 7-186 Class III
4	Rivet (2 places)	MS 20426D3
5	100° Reduced Head 1/4" Bolt & nut plate	BAC B30EL4 ▷1 NAS 1064A4
6	Rivet	MS 20426D5, 2017-T4
7	Ring, Ballast Support Bulkhead	AISI 1026, Cold Rolled Annealed MIL-S-7952
8	Shell, Nose Section (25A28299-101-11)	2024-0 Aluminum QQ-A-250/4 H.T. -T62
9	Sealant	Eccobond 211
10	Silicone Insulation (P/N to be added)	93-078 Silicone Rubber W/7% Quartz Micro-Crystals Dow Corning Corp.
11	Sealant	MIL-S-8802 or BMS5-44

B. Design Consideration - Nose Shell sized by missile ejection condition producing the following ultimate shell loads:

a. 4,350 lbs transverse shear

b. 52,500 inch pounds bending moment

c. 150 in-lb torsion moment

d. 30.6 psi max external pressure

e. Design temp. 260° F.

▷1 -6, 15 Req'd (Through 3 , 7 & 8)

-5, 3 Req'd (Through 3 & 7 only)

Table 4.1-2

USE FOR TYPEWRITTEN MATERIAL ONLY

U 2 4*02 1434 REV. 4-65

4.1.1.3 DOUBLE TAPERED SPLINE JOINT (Figure 4.1.1-3)

This joint was designed to support the warhead and to mechanically interface with the missile at the forward end of the electronics section by means of a quick disconnect joint. The joint carries the loads associated with supporting the aft end of the warhead. In addition it satisfies the design considerations shown on Figure 4.1.1-3.

This joint configuration uses internal involute splines to transfer shear and torsion loads to matching external involute splines of the forward Electronics Section. Axial loads are transferred by removable circumferential splines which seat themselves in an annular groove formed after the Payload Section is joined to the Electronics Section. These removable splines are installed through an aperture provided in the aft steel ring at azimuth 45 degrees An arrangement is provided for indexing one spline and the other is driven into position using an axial force of 100 lbs. To prevent spline backup, a tang on the spline cover plate engages the transverse seration provided at the end of the spline. The spline access cover plate is bolted to the forward Electronics Section Ring by a single A-286 bolt. An O-Ring in the aft Warhead Section Ring forms an environmental seal after the Payload Section is combined with the Electronics Section.

USE FOR TYPEWRITTEN MATERIAL ONLY

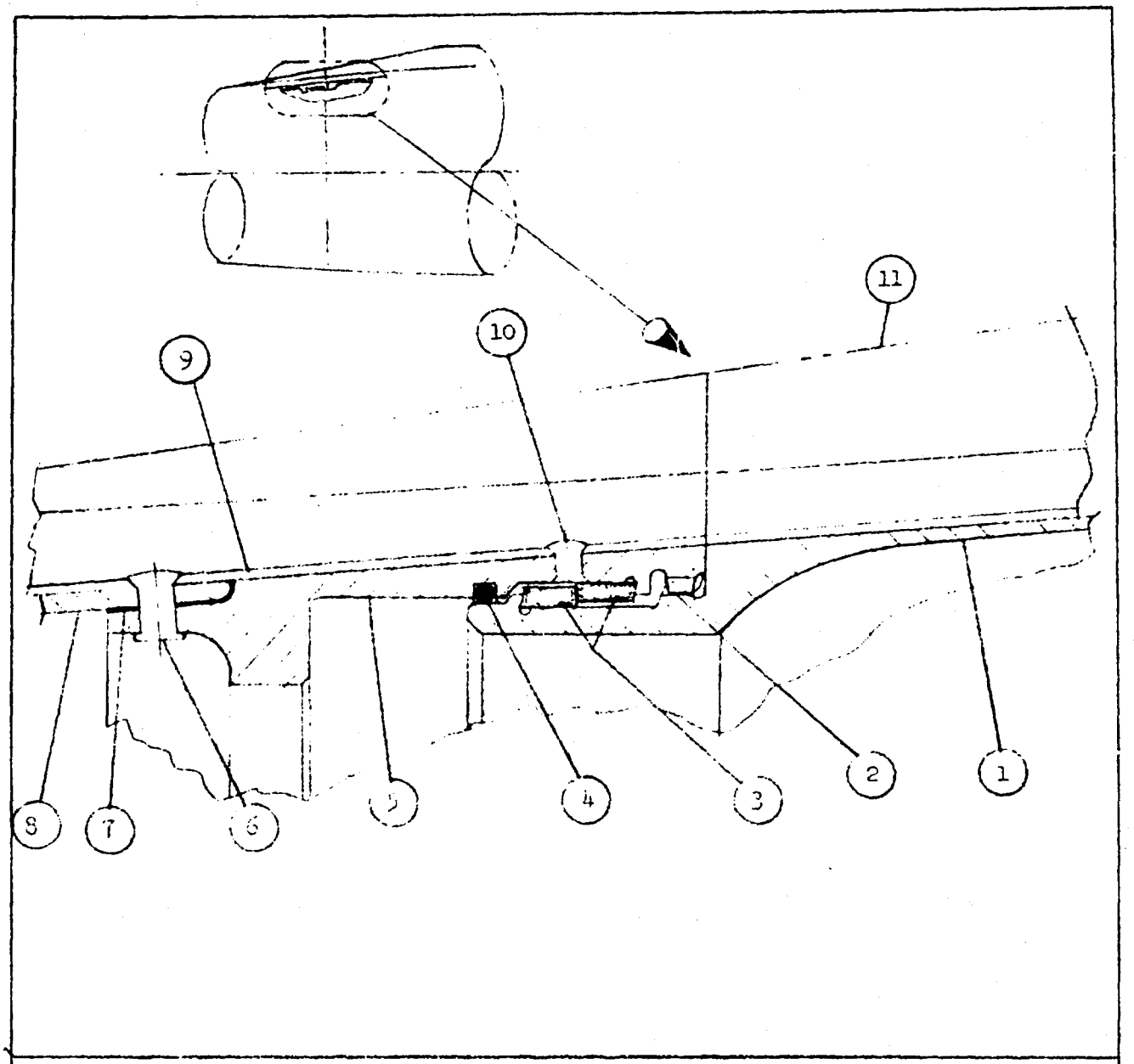

For Design and Materials Data
See Table 4.1-3

DOUBLE TAPERED SPLINE JOINT

Reference: AGM-69A Program
D2 AGM80148-1, Para. 4.2.1.2

Figure 4.1.1-3

USE FOR DRAWING AND HANDPRINTING — NO TYPEWRITTEN MATERIAL

A. PART NAME/NUMBER	MATERIALL
(1) Electronics Section Shell	Steel 4330 M, MIL-S-8699 H.T. 160-189 Ksi
(2) Involute Splines (Part of 5)	
(3) Double Tapered Splines (2)	Steel 4130 MIL-S-18729 Normalized H.T. 135-145 Ksi
(4) "O" Ring	Silicone Rubber
(5) Aft Warhead Section Ring	Steel 4330 M, MIL-S-8699 H.T. 160-180 Ksi
(6) Monel Rivet (60 places)	MS 20427M6
(7) Sealant	MIL-S-8802 or BMS 5-44
(8) Shell, Warhead Section	Aluminum 2024-0, QQ-A-250/4 H.T. -T42
(9) Plate, Raceway Extension	Aluminum 2024-T4, QQ-A-250/11
(10) Monel Rivet	
(11) External Insulation	93-078 Silicone Rubber W/7% Quartz Micro-crystals Dow-Corning Corp.

B. DESIGN CONSIDERATIONS

a. Transfer 270 K in-lb ultimate body bending load, 10 K lb ultimate transverse shear load, and 900 in-lb ultimate torsion load.

b. Design temperature for (a.) is 250° F.

c. Joint to have Payload Section interchange capability within 30 minutes while missile is in carrier rack.

d. Minimized surface steps and gaps to satisfy radar cross section and aerodynamics requirements.

e. Design must not compromise volumetric requirements imposed by warhead and electronics components.

Table 4.1-3

USE FOR TYPEWRITTEN MATERIAL ONLY

4.1.2 ELECTRONICS SECTION (Figure 4.1.2-1)

This section is actually an assembly of two sections; the Electronics Shell forward and the Motor Skirt Extension aft. The structural joint components are identified as follows:

1. Electronic Section Shell with an integrally machined fitting at the forward end to accept payload sections by means of a quick disconnect joint.
2. Motor Skirt Extension
3. Raceway Fairing and Umbilical Cover

4.1.2.1 ELECTRONICS SECTION FORWARD JOINT (Figure 4.1.1-3)

The internally machined ring at the forward end of the Electronics Section Shell is designed to mechanically interface with the Payload Section as part of the Double Tapered Spline Joint described in paragraph 4.1.1.3.

4.1.2.2 MOTOR SKIRT EXTENSION (Figure 4.1.2-2)

At the interface of the Electronics Shell forward and the Motor Skirt Extension is located the Electronic Support Fitting (see Item No. 3). This structural member provides a mounting surface for electronic equipment and is machined as an integral part of the environmental and umbilical systems. Its circumferential flange is fitted with nut plates to permit attachment of a conventional bolted spline joint. A similar joint less the support fitting provides the interface between the Motor Skirt Extension and the Propulsion Section.

USE FOR TYPEWRITTEN MATERIAL ONLY

U3 4807 1434 REV. 8-65

USE FOR DRAWING AND HANDPRINTING — NO TYPEWRITTEN MATERIAL

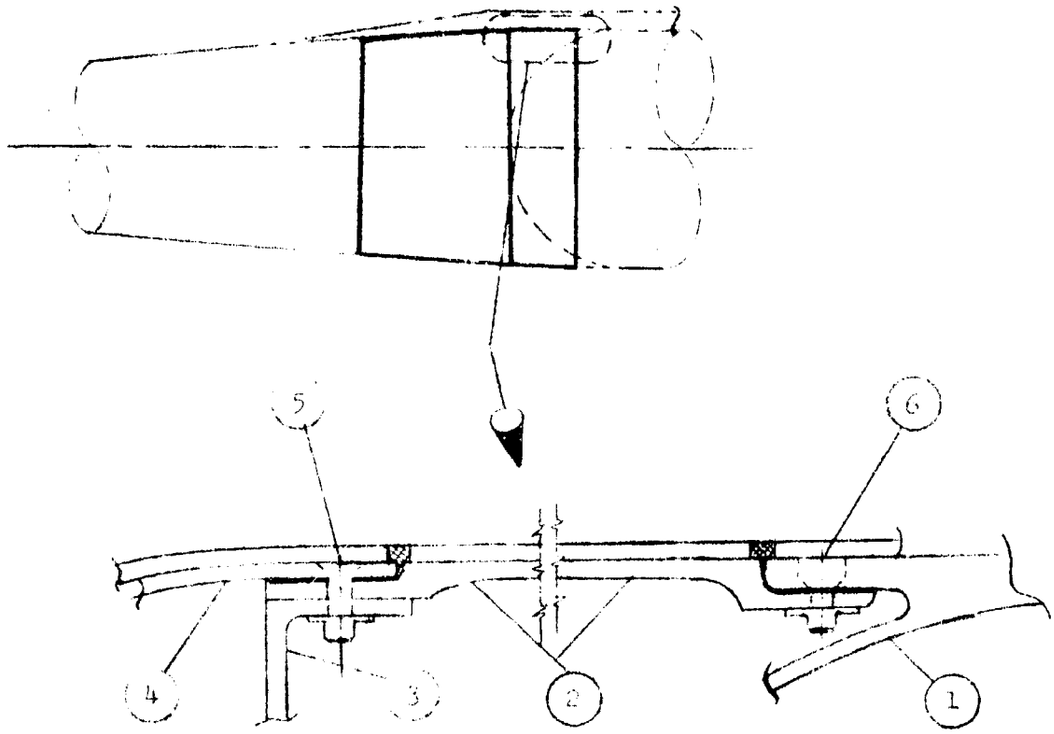

Scale: None

For Design Considerations & Materials Data see Table 4.1-8.

MOTOR SKIRT EXTENSION
FORE AND AFT ASSY JOINTS

Reference: AGM-69A
D2AGM 20148-1, Para. 4.2.1.5

Figure 4.1.2-2

A. PART NAME/NUMBER	MATERIAL
1 Motor Case, Fwd Dome & Skirt (20A14004)	Steel 4335V Air Melt Vacuum Degassed Hit. 205-225kps
2 Motor Skirt Extension (25A28087)	Steel 4330M MIL-S-8699 Hit. 160-180ksi
3 Electronic Support Casting (25A28296)	Aluminum 356-T6 QQ-A-601
4 Electronics Section Shell (25A28613)	Steel 4330M MIL-S-8699 Hit. 160-180ksi
5 5/16 inch Bolts	BAC B30EL5-16 (2 places) BAC B30EL5-7 (27 places)
6 1/4 inch Bolts	NAS 1504-4 (43 places)

B. DESIGN CONSIDERATION

Critical condition is missile ejection which produces:

1. Ultimate bending load of 37[illegible],000 in lb
2. Ultimate transverse shear load of 10,000 lb at 280°F Shell temp.

Table 4.1-4

USE FOR TYPEWRITTEN MATERIAL ONLY

4.1.3 Control Section

This section interfaces with the Propulsion Section forward and the Tail Cone Section aft.

4.1.3.1 Aft Motor Case Assembly Joint (Fig. 4.1.3-1)

This joint provides the mechanical interface for attaching the Control Section to the Propulsion Section. It consists of a forged ring welded to the aft end of the motor casing. The Hydraulic Manifold is mounted on the inside of the forged ring aft flange and the Control Section Fairing is mounted on the outside of the same flange. In addition, the Nozzle Shell is mated to the Aft Motor Case Ring and mechanically held by a threaded retaining ring.

4.1.3.2 Nozzle Closure (Fig. 4.1.3-2)

A nozzle closure is included on the aft end of the nozzle shell which seals the motor to maintain the propellant in a controlled environment prior to motor firing. The closure is designed to rupture cleanly when the motor chamber pressure rises to 175± 25 psi at first pulse ignition. The closure is bonded to the nozzle shell with an epoxy adhesive. The surface which forms the outer periphery of the nozzle closure forms an interface with the Control Section Fairing.

4.1.4 Tail Cone Section

The single joint of the Tail Cone Section provides the mechanical interface with the Control Section.

USE FOR TYPEWRITTEN MATERIAL ONLY

USE FOR DRAWING AND HANDPRINTING — NO TYPEWRITTEN MATERIAL

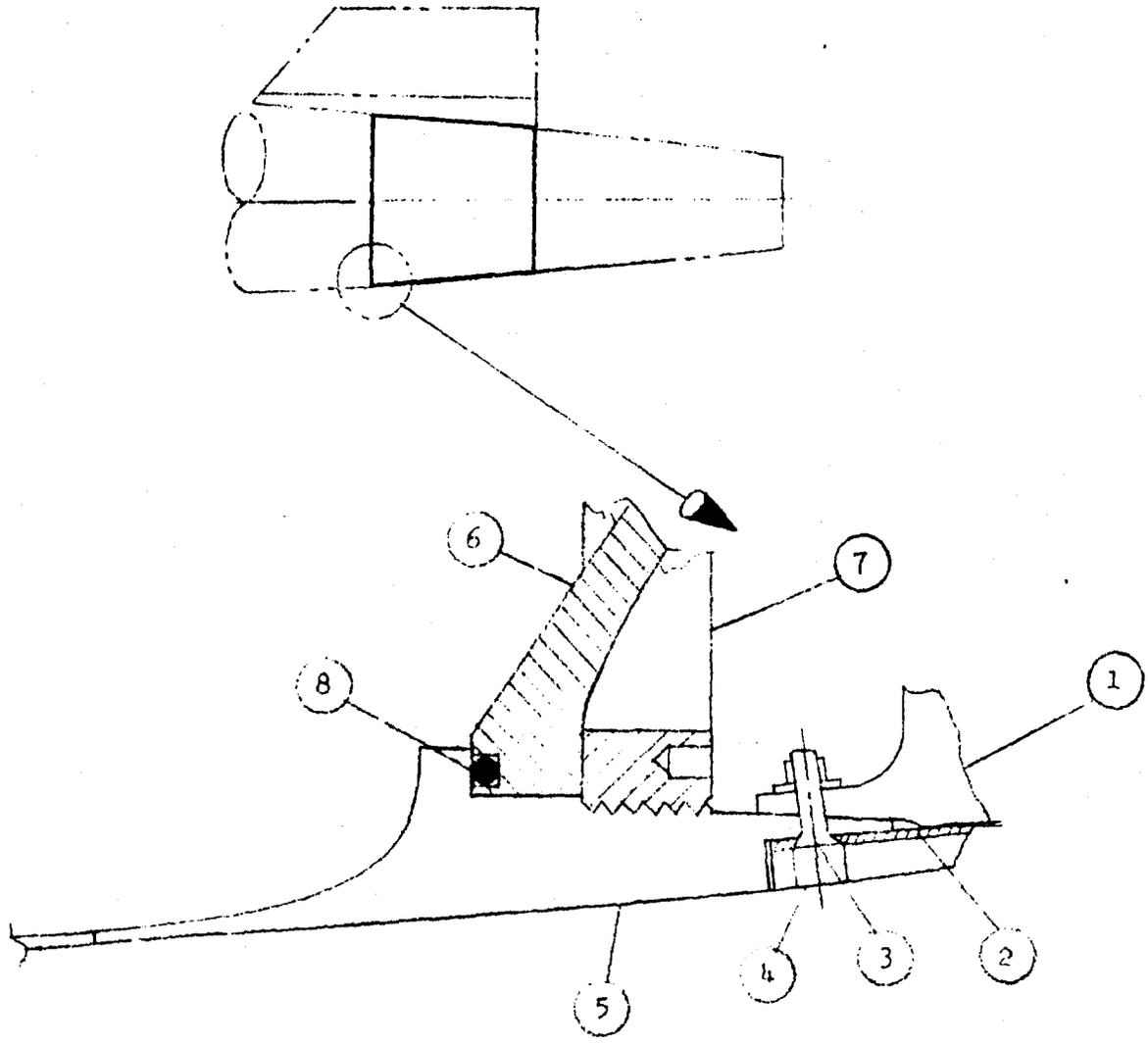

Scale: None

For design considerations and materials data
See Table 4.1-5

AFT MOTOR CASE ASSEMBLY JOINT

Reference: AGM-69A
D2AGM20144-1, Para. 4.2.2.1

FIGURE 4.1.3-1

A. Part Name/Number	Material
1.) Hydraulic Manifold Forging	Aluminum 6061-T6 QQ-A-367
2.) Fairing Shell, Control Section (25A28080-110-11)	Aluminum 6061-0 QQ-A-250/11 H.T. -T6
3.) 1/4" Bolts	12 BAC30FB4-7 (thru 1, 2, & 5)
4.) Silicone Insulation [illegible]	
5.) Motor Case Aft Ring (20A14004)	Steel 4335V, Air Melt Vacuum Degassed H.T. 205-225Ksi
6.) Nozzle Shell	Same as (5)
7.) Motor Case Retaining Ring	Same as (5)
8.) " Ring Seal	

B. Design Considerations

Ref. D2AGM 1, Para. 5.3.3.2

TABLE 4.1-5

USE FOR TYPEWRITTEN MATERIAL ONLY

USE FOR DRAWING AND HANDPRINTING — NO TYPEWRITTEN MATERIAL

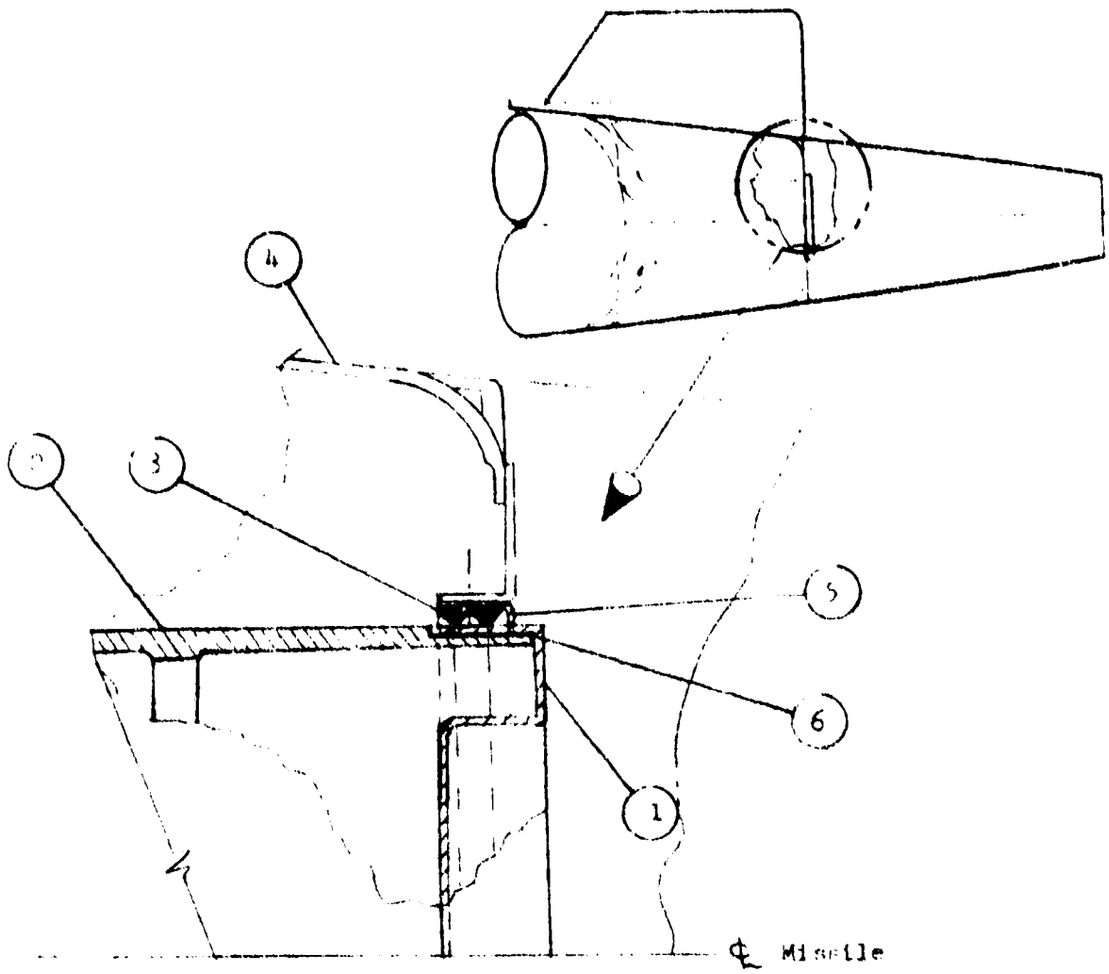

Scale: None

For design considerations and materials Data
See Table 4.1-6

NOZZLE SHELL AFT CLOSURE

Reference: AGM-69A Program D2AGM 0150-1

FIGURE 4.1.3-2

A. Part Name/Number	Material
(1.) Nozzle Closure	Steel 6061-T6
(2.) Aft Closure Shell	Steel 4335V Air Melt Vacuum Degassed H.T. 205-225Ksi
(3.) Engine Exhaust Seal (26413528)	Silicone Rubber BMS 1-45
(4.) Tail Cone Attach Fitting (P9A17132)	Aluminum QQ-A-250/4
(5.) Seal Retainer Ring (P5A28080-104-11)	Aluminum 6061-T4 QQ-A-2510/11 H.T. -T6
(6.) Epoxy Adhesive	

B. Design Considerations:

Ref. D2AQM20162-1, Para. 5.3.8.3

TABLE 4.1-6

USE FOR TYPEWRITTEN MATERIAL ONLY

U3 4802 1434 REV. 5-65

4.1.4.1 TAIL CONE SEPARATION JOINT (Figure 4.1.4-1)

The Tail Cone is an aerodynamic fairing attached to the aft end of the AGM-69A missile to reduce drag force during external carry by the carrier aircraft. The tail cone remains attached to the missile until rocket motor ignition occurs during launch. Motor ignition causes over-pressurization of the tail cone shell, and at approximately 33 pounds per square inch (psi) internal pressure. The Tail Cone attachment bushing shear out, resulting in separation of the tail cone from the missile.

Through-drilled holes in each of three longitudinal depressions in the forward portion of the spun shell, provide access to tail cone fasteners at 60, 180 and 300 degrees azimuth, for the assembly/disassembly function.

USE FOR TYPEWRITTEN MATERIAL ONLY

U3 4P07 1434 REV. 8-55

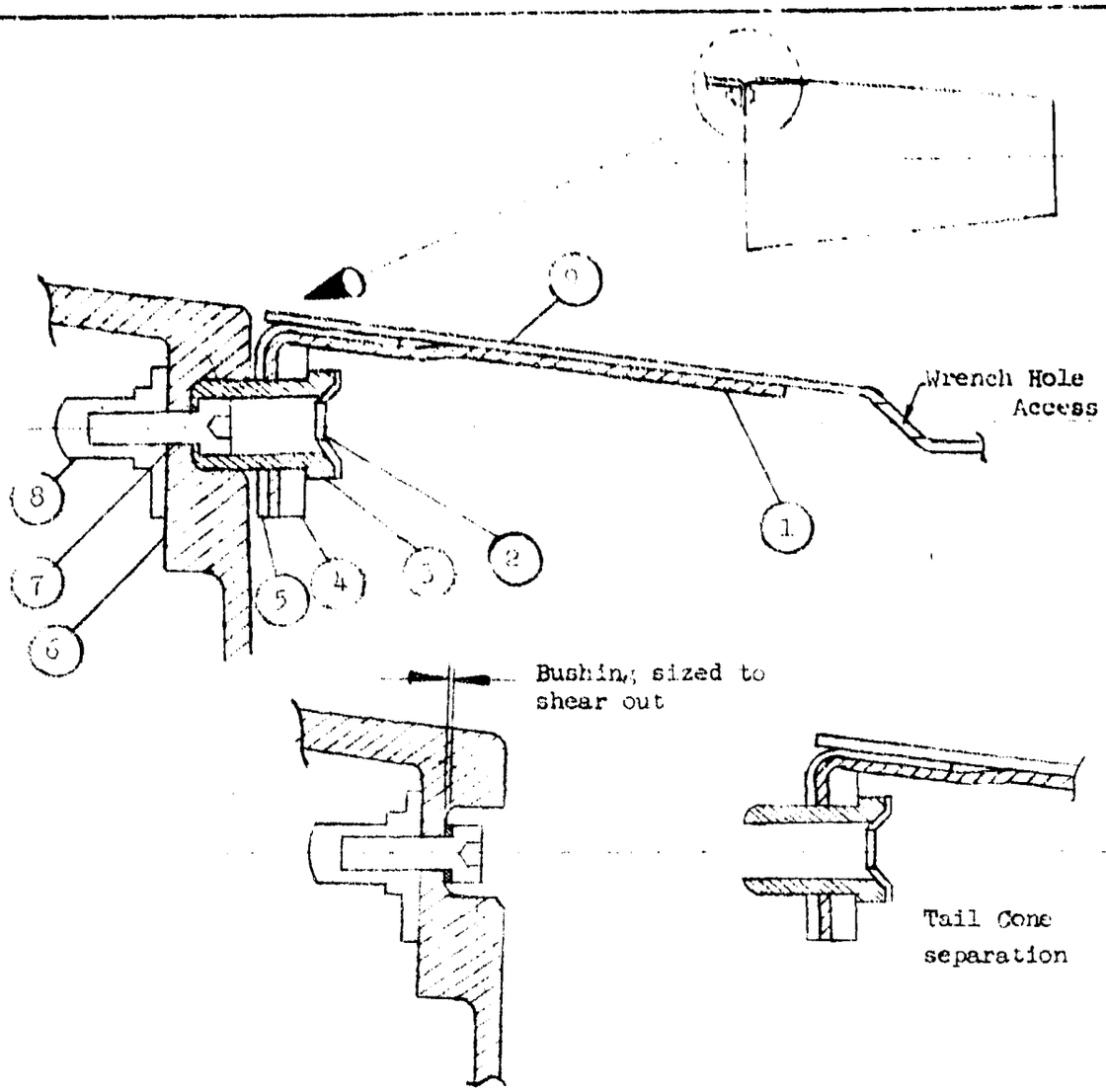

TAIL CONE SEPARATION JOINT

Scale: None

For Design Considerations and Materials Data See Table 4.1-7

TAIL CONE SEPARATION JOINT

Reference: AGM-59A
D2 AGM 20150-1, D2AGM 20148-1

Figure 4.1.4-1

USE FOR DRAWING AND HANDPRINTING — NO TYPEWRITTEN MATERIAL

A. PART NAME/NUMBER — MATERIAL

1	Doubler, Tail Cone (25A258288-101-11)	2024-0 QQ-A-250/5 H.T. -T6
2	Retainer, Tail Cone (29A17190-101-11)	6061-0 QQ-A-250/11
3	Bushing, Tail Cone Attachment (29A17191-101-11)	6061-T6 QQ-A-250/11
4	Plate, Filler, Tail Cone (26A13529-101-11)	6061-T6 QQ-A-250/11 H.T. -T6
5	Ring, Tail Cone (25A28289-101-11)	2024-0 QQ-A-250/4 H.T. -T6
6	Tail Cone Attach Fitting (25A17132)	2024-T6 QQ-A-250/4
7	Attachment Screw (3 places)	MS 16998-28
8	Nut Plate	BACNIOEN
9	Shell, Tail Cone (25A28291-101-11)	6061-0 QQ-A-250/11 H.T. -T6

B. DESIGN CONSIDERATIONS:

Fairing to withstand local aerodynamic ultimate loads of 21.3 psi and Tail Cone jettison ultimate load of 4130 lbs.

Table 4.1-7

USE FOR TYPEWRITTEN MATERIAL ONLY

4.2 SELECTED SMALL MISSILE JOINTS

Small missile joint applications which differ from approaches used for AGM-69A are presented in this section together with such design data as was available.

4.2.1 The Exos

A three stage sounding vehicle, the Exos started with the Honest John for its first stage. A ground-to-ground artillery rocket, Honest John yields very high thrust for over four seconds. The second stage used a Nike booster. Third stage was provided by a version of the Thiokol Recruit known as the Yardbird, which had an acceleration capability of approximately 80 g's. The joint used between the second and third stages serves both as an assembly and as a separation joint.

The flared skirt on the forward stage and the coupling casting bolted to the aft stage (reference Fig. 4.2-1) are both threaded on the outside of the blast diaphragm. Upon forward (third) stage ignition, the pressure of the exiting gas bows the diaphragm so that the threads become disengated from the flared skirt, and a clean rapid separation occurs.

This system is generally used between stages which are fired in succession without a coast period, to avoid large drag losses caused by the relatively large skirt diameter and the burned out preceding stage.

USE FOR TYPEWRITTEN MATERIAL ONLY

U3 4802 1434 REV. 8-68

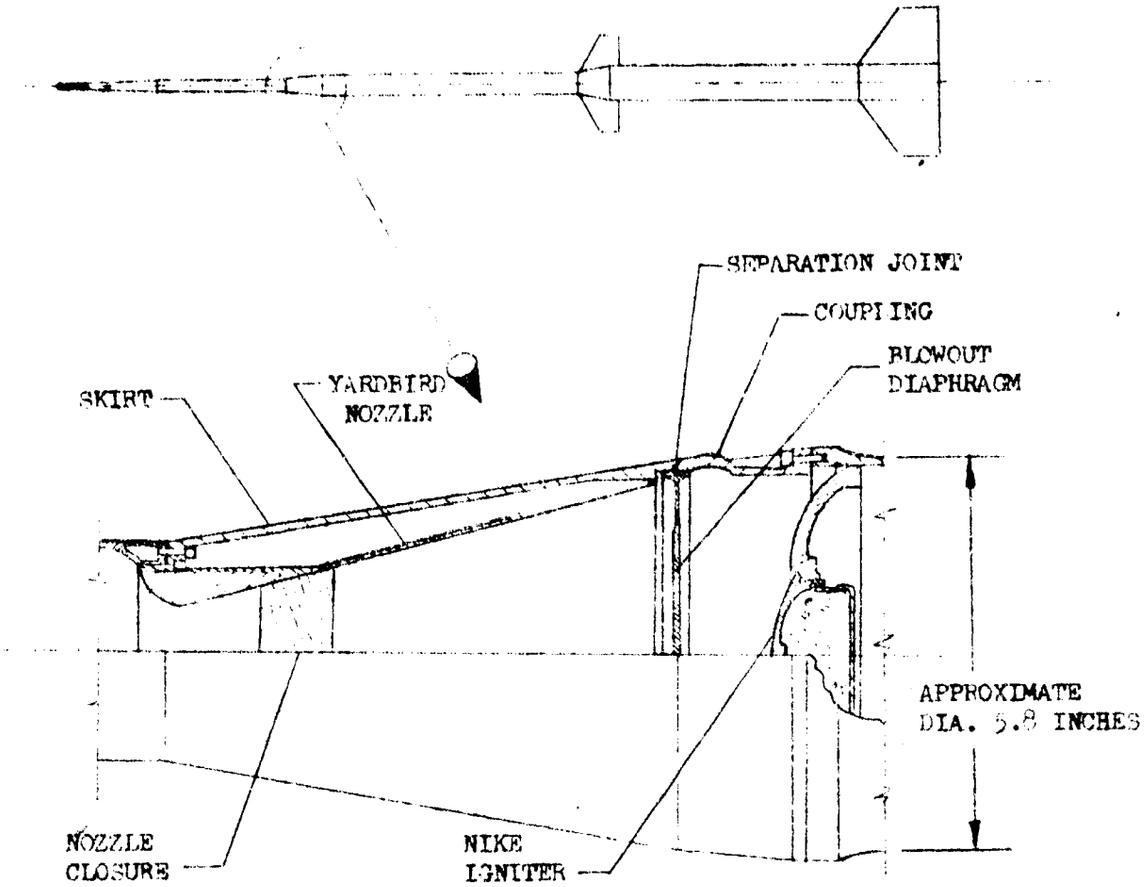

BLAST DIAPHRAGM SEPARATION JOINT

Scale: None

References: Exos Sounding Rocket, Small Sounding Rocket Symposium, XIth International Astronautical Congress, Vol. II, Stockholm, 1960

FIGURE 4.2-1

USE FOR TYPEWRITTEN MATERIAL ONLY

4.3 The Joint Selection Process

4.3.1 An example of the process which permits selection of a candidate joint for a particular application was the selection of the Double Tapered Spline Joint (Ref. Fig. 4.1.1-3) for the payload electronic section interface on AGM-69A.

4.3.2 An advanced study produced a series of candidate joint concepts, shown by Fig. 4.3-1. Each joint was compared against a weighted list of design considerations having a total numerical value of 10.0. Thus the numerical assessment indicated that the preliminary selection was Concept 9, the Spring Loaded Shear Key. However, in the evolution between concept and design, governed by more restrictive ground rules, new candidate designs were developed (Fig. 4.3-2) and a later selection was made, namely the "Tapered Spline Joint". The prime considerations for selection from this matrix were weight, cost, and evaluation for compatibility with missile system requirements.

Consequently, it can be seen that while the Bolted Joint had the lowest weight and cost figures, the missile system requirement for warhead interchangeability within carrier aircraft bomb bay, dictated the selection of the Tapered Spline Joint design.

USE FOR TYPEWRITTEN MATERIAL ONLY

	TYPE	ACTUATOR	OPERATES QUICKLY, EASILY WITH FEW SPECIAL TOOLS 5.0	HAS RELIABLE SEAL 1.0	RE-USABLE MANY TIMES .3	EASY TO FABRICATE .2	LOW COST 2.0	USES LITTLE SPACE .5	LIGHT WEIGHT .5	LITTLE CHANGE OF INCORRECT OR INCOMPLETE INSTALLATION .5	TOTAL 10.0
1	BREECH-LOCK ACME NO-LEAD THREADS	MANUAL: 1. INSERT 2. ROTATE 1/8 TURN 3. LOCKING PIN	2	.8	.1	.2	1.4	.4	.2	.5	5.6
2	EXTERNAL CLAMP	CLAMP SCREW, WRENCH TIGHTENED, SINGLE FASTENER	3	.5	.2	.1	.8	.4	.2	.4	5.6
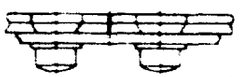 3	BOLTED JOINT	WRENCH TIGHTENED 30 FASTENERS (APPROX)	.5	.2	.1	.1	1.6	.4	.4	.4	3.7
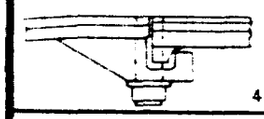 4	INTER-RUPTED FLANGE	MANUAL: 1. INSERT 2. ROTATE 1/8 TURN 3. LOCKING PIN	2	.8	.1	.0	1.0	.5	.4	.5	5.3
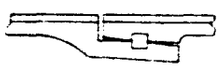 5	SHEAR KEY	MANUAL: 1. MATE 2. INSTALL SHEAR KEY 3. LOCK PIN	1	.8	.1	.1	1.4	.5	.5	.4	4.8
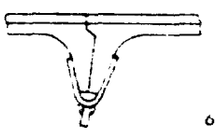 6	INTERNAL CLAMP	EXPANDING INTERNAL CLAMP, WRENCH OPERATED & LOCKED	3.5	.6	.2	.1	.2	0	.2	.4	5.2
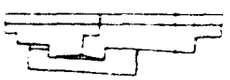 7	INTERNAL FLOATING LOCK RING	ROTATING LOCK RING GEAR ACTUATED CAM-LOCK FACES	2	.7	.1	.1	.4	.5	.1	.3	4.2
8	EXTERNAL THREADED COUPLING	SPANNER OR STRAP WRENCH TURNS FLOATING RING	2	.5	.1	.1	1.0	.3	.1	.4	4.5
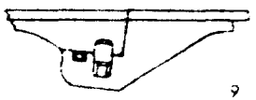 9	SHEAR KEY, SPRING LOADED	PLIERS-TYPE OR C-CLAMP TYPE TOOL COMPRESSES KEY	3.5	.8	.2	.1	1.2	.4	.4	.5	7.1

ITEM								
COLUMN	1	2	3	4	5	6	7	
STA 62.30 BODY JOINT (REF CONFIG 20)	WEIGHT LB	COST	EASE OF OPERATION	WITHIN SPACE LIMITATION	COMPATIBILITY WITH AEC W/H	MFG COMPLEXITY	EASE OF CORR CONT	RE (FA
JAP WIRE (D2AGM12209-5)	13.2 WT IS LOW BECAUSE NO ADDITIONAL SPACE IN GROOVE WAS PROVIDED FOR LOCK RING EXP	$111.00 AVE COST 5	1. REMOVE COVER 2. EXPAND RING 3. SLIDE COMPT FWD UNTIL LOCK RING CLEARS GROOVE	NO LOAD REQMT CAUSES JOINT TO EXCEED SPACE AVAILABLE 1	CURRENT W/H MTG TECHNIQUES OF AEC ARE NOT ADAPTABLE 2	4.44 M/H (FAB/COST ACCT)	CAD PLATED CLOSE FIT & RELATIVE MOTION IN VIB & INSTL CAUSE GALLING & LOSS OF CORR PROTECTION	C S F W P R L S
COLLET (D2AGM12209-6)	19.8	$214.00 AVE COST 5	1. LOOSEN 3 SET SCREWS 2. ROTATE COLLET	NO LOAD REQMT CAUSES JOINT TO EXCEED SPACE AVAILABLE 1	CURRENT W/H MTG TECHNIQUES ARE NOT ADAPTABLE 2	8.49 M/H (FAB/COST ACCT)	HIGH INSTL TORQUE REQD CAUSES GALLING ON WEDGING SURFACES & LOSS OF CORR PROTECTION CAD PLATE	S B L E E S
BOLTED 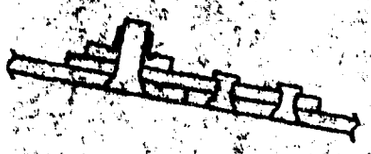	6.3	$85.00 AVE COST 5	1. REMOVE 26 BOLTS (10 MIN. OPERATION)	YES	AEC W/H MTG REQMT CAN BE INCORPORATED INTO THIS JOINT	3.52 M/H (FAB/COST ACCT)	FASTEMERS INSTALLED WITH WET PRIMER. FAYING SURFACES IN RIVET JOINT ALSO WET PRIMED	B B T
TAPERED SPLINE 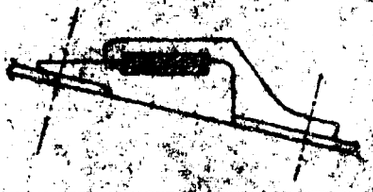	10.1	$98.00 AVE COST 5	1. REMOVE COVER 2. UNLOCK SPLINES 3. REMOVE 2 SPLINES	YES	AEC W/H MTG REQMT CAN BE INCORPORATED INTO THIS JOINT	3.02 M/H (FAB/COST ACCT)	CAD PLATED RING & AL ALODINED SPLINES STATIC JOINT NO MOVEMENT METAL TO METAL ZERO GAP ENGAGEMENT	N L C A I

1 JOINT INTERFERES WITH CONFIG NO. 20 W/H

2 AEC USES FLANGE MTG, RADIAL BOLTS, LARGE THD'D NUT OR INTEGRAL CASE - W/H

3 MAX WIDTH OF CRACK DESIRED .001 WHEN DEPTH EXCEEDS .10

4 MARGINS CANNOT BE REDUCED BECAUSE OF MIN MAT'L REQD FOR FAB

5 EXCLUDES TOOL DESIGN ENGR DESIGN & TOOL FAB COSTS & OPERATIONS COMMON TO ALL JOINTS

2

CONSIDERATION

7	8	9	10	11	12	13	14	15	1
EASE OF CORR CONT	RELIABILITY (FAILURE MODE)	REUSABLE	ACCESS TO JOINT FASTENER	SPECIAL TOOLS	INSTL RISK	SEALING SYSTEM	INSTL EFFECTS ON CORK	NUMBER OF FAB PARTS	HARD PART
CAD PLATED CLOSE FIT & RELATIVE MOTION IN VIB & INSTL CAUSE GALLING & LOSS OF CORR PROTECTION	CENTERING SPRING FAILURE WOULD PERMIT LOCK RING TO UN-LOCK ON ONE SIDE	NO LIMITATION ON LOCK COVER SCREW REPLACEMENT	THRU ACCESS OPENING	RING EXPANSION TOOL REQD	RING FAILS TO ENGAGE	STATIC "O" RING W/RING ACCESS COVER	1. ACCESS OPENING REQUIRES CORK PLUG COVER BOLT PLUG	5-REQD 1-COVER 2-FTG 1-LOCK RING 1-CENTER-ING RING	2-RE 1-C SC 1-IN PI
HIGH INSTL TORQUE REQD CAUSES GALLING ON WEDGING SURFACES & LOSS OF CORR PROTECTION CAD PLATE	SET SCREW BECOMES LOOSE OR IN INAD-EQUATELY SET	SET SCREW COVER SCREW REPLACEMENT REQD BECAUSE OF CAD PLATE GALLING	EXPOSED AT ALL TIMES	LARGE STRAP TYPE TORQUE WRENCH REQD	FAIL TO TORQUE JOINTS OR SECURE SET SCREWS	STATIC "O" RING BUT CLEARANCE GAP REQD FOR COLLET ROTATION	1. COLLET REQUIRES SEPARATE CORK INSULATION 2. SET SCREW PLUG (3)	3-REQD 2-FTG 1-COLLET	4-RE 3-SE SC 1-IN PI
FASTEMERS INSTALLED WITH WET PRIMER. FAYING SURFACES IN RIVET JOINT ALSO WET PRIME D	BOLTS MAY BE CROSS THREADED	BOLTS REQUIRE REPLACEMENT BECAUSE OF FINISH GALLING	REMOVE 26 BOLT COVER PLUGS IN CORK	NONE	FAIL TO TORQUE BOLTS	STATIC "O" RING & WET PRIMER ON BOLTS	26 HOLES IN CORK TO PLUG	2-REQD 1-DOUBLER 1-FILLER	52-R 26-B 26-N P
CAD PLATED RING & AL ALODINED SPLINES STATIC JOINT NO MOVEMENT METAL TO METAL ZERO GAP ENGAGE-MENT	NEGLECT LOCKWIRE OF SPLINES AFTER INSTL	NO LIMITATION ON SPLINE. COVER SCREW REQUIRES REPLACEMENT BECAUSE OF FINISH GALLING	THRU ACCESS OPENING	SPLINE HANDLE REQD	INADEQUATE LOCKWIRE OF SELF-LOCKING SPLINES	STATIC "O" RING W/SPLINE ACCESS COVER	1. ACCESS OPENING PLUG REQD 2. COVER BOLT PLUG	5-REQD 2-FTG 2-SPLINE 1-COVER	2-RE 1-IN PI 1-C SC

ECAUSE OF MIN

ESIGN & COMMON

SHEET

2

3

D2-125911-1
REV A

(14) INSTL EFFECTS ON CORK	(15) NUMBER OF FAB PARTS	(16) HARDWARE PARTS	(17) JOINT COMPLEXITY	(18) INTERCHANGE-ABILITY	(19) RADAR CROSS SECTION	(20) TYPE FAB TOOLS REQ'D	(21) CAPITAL INVESTMENT	(22) STRESS LEVEL
1. ACCESS OPENING REQUIRES CORK PLUG COVER BOLT PLUG	5-REQD 1-COVER 2-FTG 1-LOCK RING 1-CENTER-ING RING	2-REQD 1-COVER SCREW 1-INDEX PIN	SIMPLE 5-MATCHED SURFACES 1-ANNUALR MATCH	SIMPLE LOCK RING GROOVE ALIGNMENT IS CRITICAL	GOOD 1-CRACK 3	LATHE GRINDERS MILL ASSY 34	$655K	1. POSITIVE MARGIN 2. OK PER STRESS UNIT
1. COLLET REQUIRES SEPARATE CORK INSULATION 2. SET SCREW PLUG (3)	3-REQD 2-FTG 1-COLLET	4-REQD 3-SET SCREWS 1-INDEX PIN	MOST COM-PLICATED 48-MATCHED SURFACES DOUBLE CAM LUGS CLOSE TOLERANCES SET SCREWS.	LUG ALIGNMENT CRITICAL	2-CRACK 3	LATHE GRINDERS MILL DRILL JIGS ASSY 29	$682.7K	1. POSITIVE MARGIN 2. OK PER STRESS UNIT
26 HOLES IN CORK TO PLUG	2-REQD 1-DOUBLER 1-FILLER	52-REQD 26-BOLTS 26-NUT PLATES	COMPLICATED 26-MATCHING BOLT HOLES ON TWO MATCHED OGIVES	26 MATCHED RADIAL BOLT HOLES DRILL JIGS & GAGES REQD	1-CRACK 26-RECESSED SCREWS 3	LATHE MILL BROACH DRILL JIGS ASSY 20	$334.6K	NO STRESS CHECK (BOLTS UNACCEPTABLE)
1. ACCESS OPENING PLUG REQD 2. COVER BOLT PLUG	5-REQD 2-FTG 2-SPLINE 1-COVER	2-REQD 1-INDEX PIN 1-COVER SCREW	SIMPLEST 3-MATCHED SURFACES 1-ANNULAR MATCH	SIMPLEST NO CRITICAL TOLERANCES PERPEN-DICULARITY OF MATING SURFACE TO ℄ CRITICAL	BEST 2-GROOVES REQUIRE FILLING NO CRACK 3	FORMING ROUTER DRILL JIGS ASSY 11	$561.7K	1. LG POSITIVE MARGINS 4 2. OK PER STRESS UNIT

FIGURE 1.2-2

BODY JOINT
TRADE STUDY
CALARSON 4/25/6

SH-A 85

4.4 AN ORIGINAL JOINT CONCEPT

This section presents a joint concept for a missile of approximately 16 to 17 inches in diameter. Its primary purpose is to provide attachment of a payload section to the main body of the missile. Its capability is intended to provide the following:

I. Transfer:

a. 270,000 in-lb. ultimate bending load.

b. 10,000 lb. ultimate transverse shear load.

c. 900 in-lb. ultimate torsion load.

II. Thirty minute assembly/disassembly of payload section while missile is attached to carrier aircraft.

III. Minimize surface gaps and steps to satisfy radar cross section and aerodynamic requirements.

IV. Maximum possible internal volume for warhead and electronic equipment.

V. Satisfy I through IV at a design temperature of 270° F.

4.4.1 DESCRIPTION

The joint consists of a forward ring attached by rivets to the nose section, and an aft ring similarly attached to the main body shell. The aft ring is assembled inside the forward ring so that twelve bayonets on the aft ring pass through twelve slots in the main flange of the forward ring. (Reference Figure 4.4.1-1). As viewed from the rear, the aft ring is rotated clockwise through approximately six degrees (6°). This draws the inclined bayonet surfaces of the aft ring flange against matching surfaces on the forward ring flange, while forcing the principal circumferential flanges of each to bear on one another. While thus held, the assembly is locked by installing a lock bolt through lugs, one on each ring, which have been drawn together by the rotation. Access is provided

USE FOR TYPEWRITTEN MATERIAL ONLY
U3 4802 1434 REV. 8-65

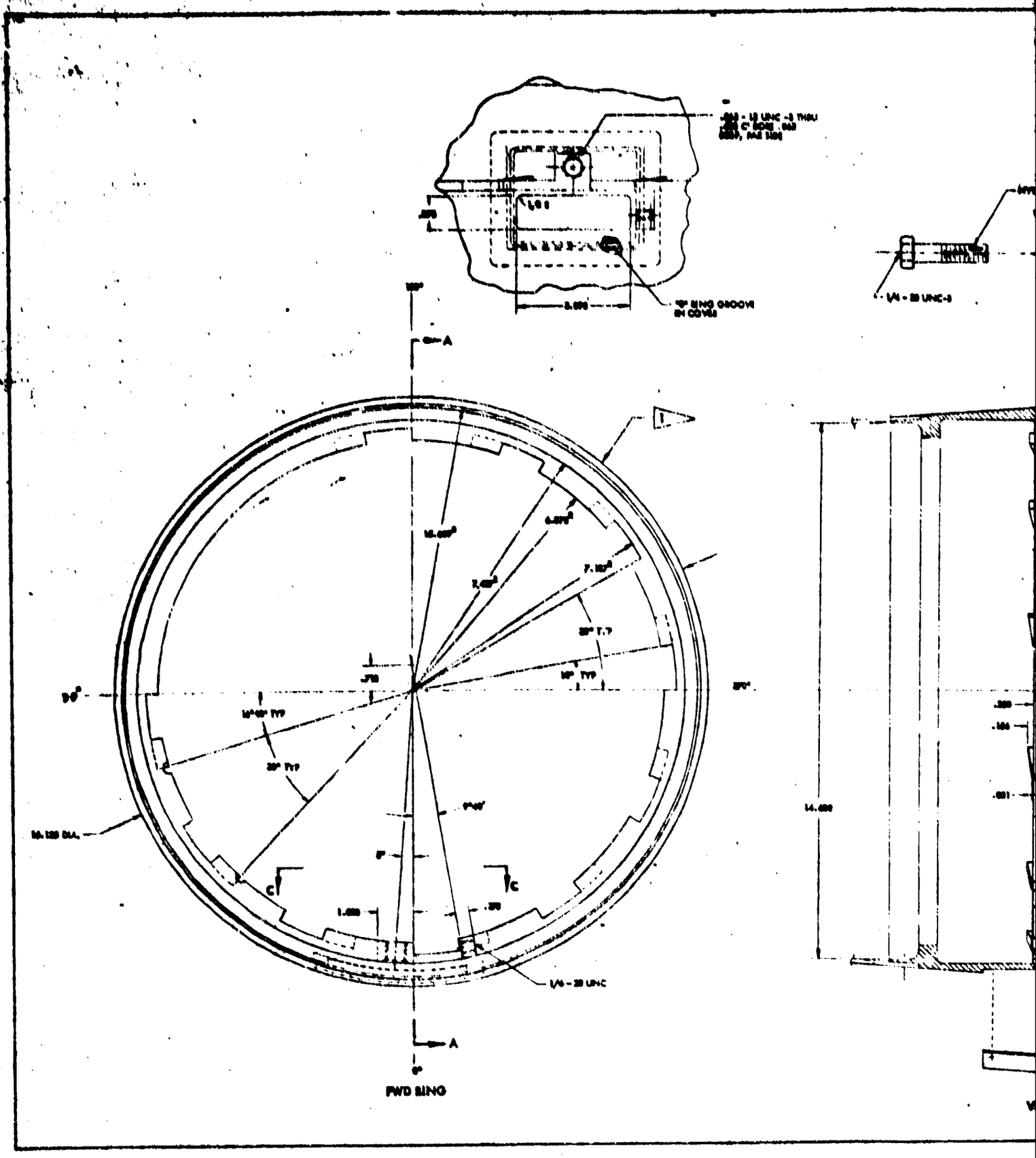
A
C
C
A
1/4 - 28 UNC
FWD RING

2

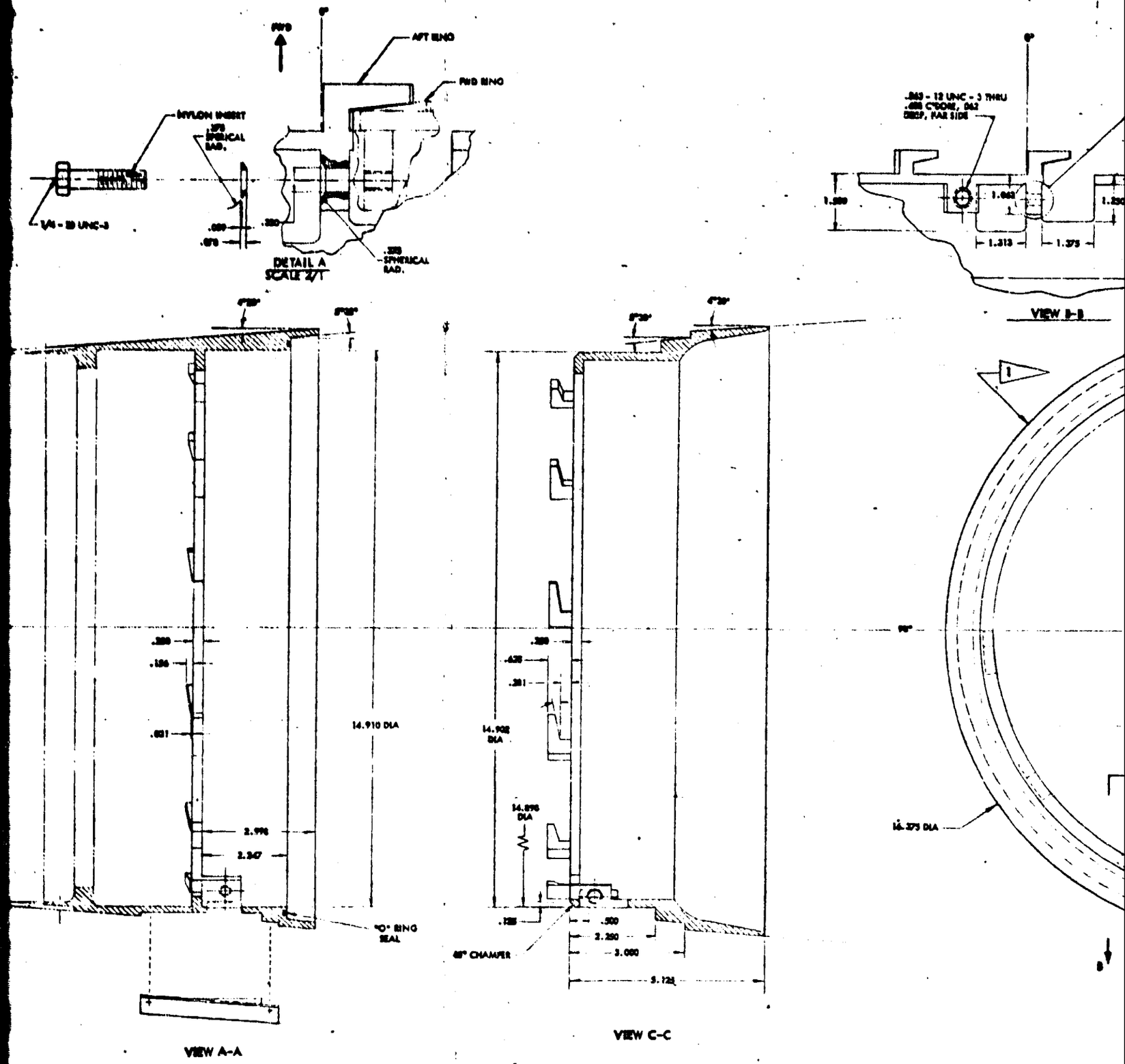
AFT RING
FWD RING
NYLON INSERT
SPHERICAL RAD.
DETAIL A
SCALE 2/1
SPHERICAL RAD.
.863 - 12 UNC - 3 THRU
DEEP, FAR SIDE
VIEW B-B
14.910 DIA
14.902 DIA
14.875 DIA
14.375 DIA
"O" RING SEAL
45° CHAMFER
VIEW A-A
VIEW C-C

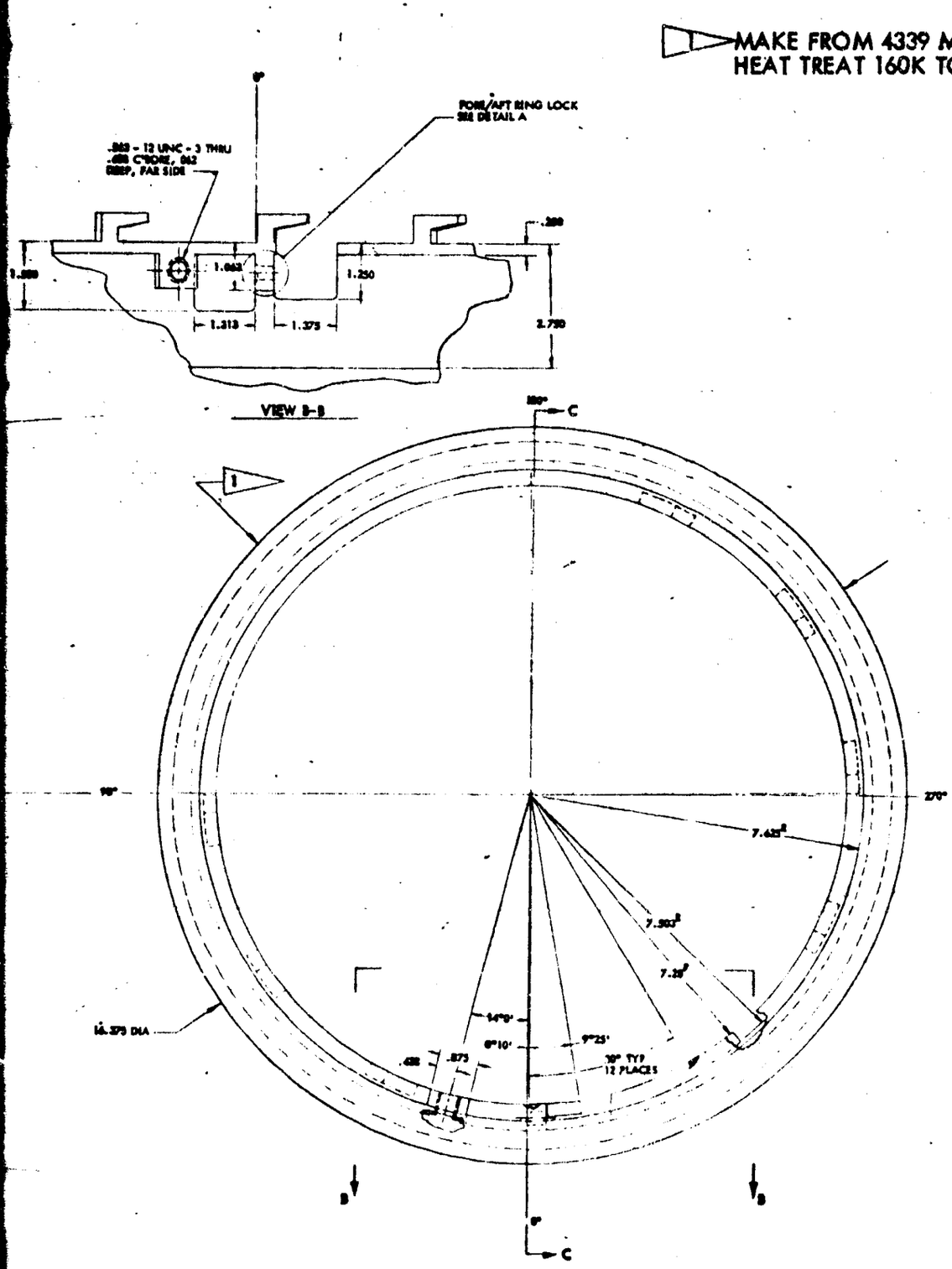

AFT RING FIGURE 4.4.1-1: MISSILE JOINT CONCEPT
COMPENDIUM OF MISSILE JOINTS

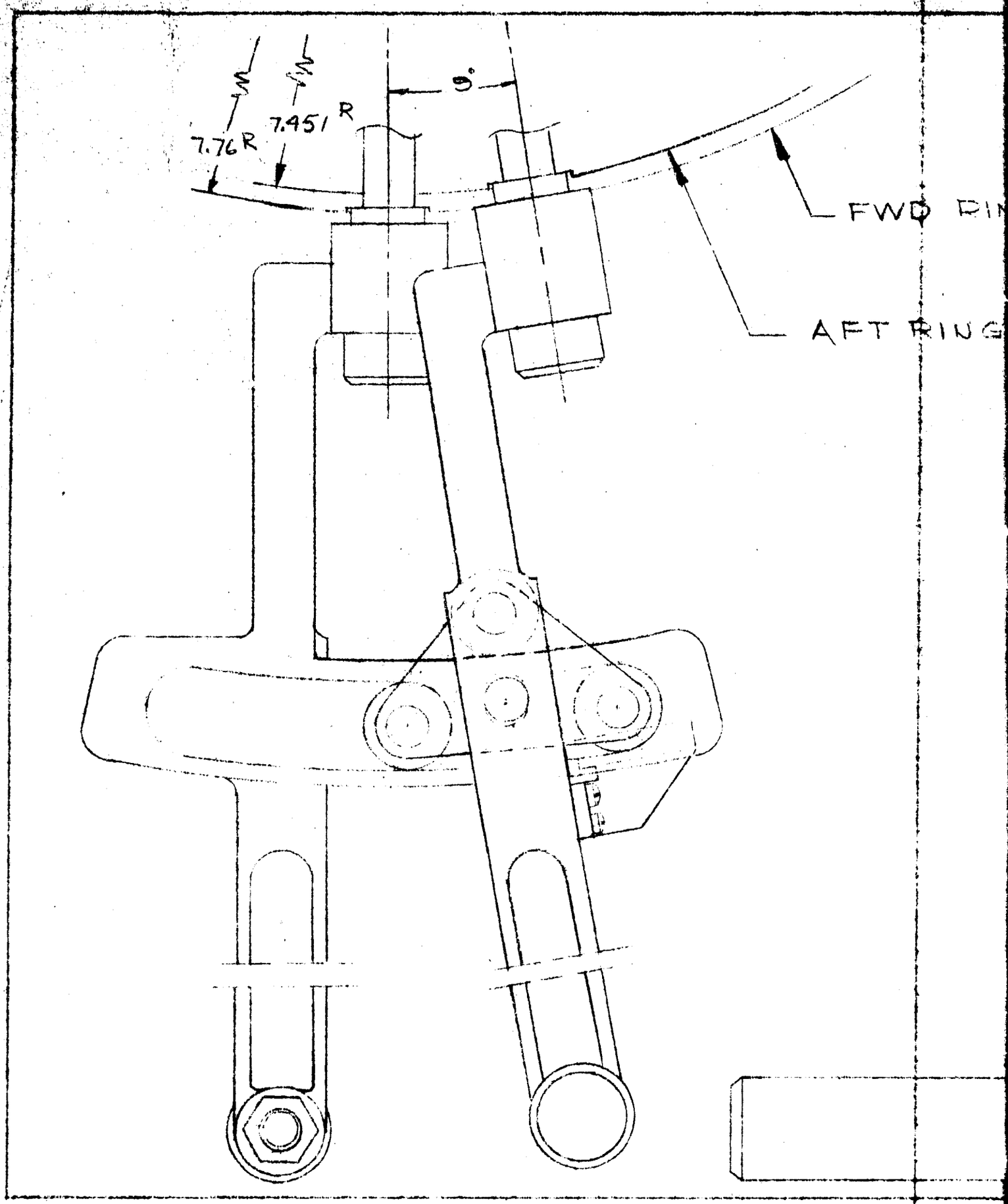
9°
7.451 R
7.76 R
FWD RIN
AFT RING

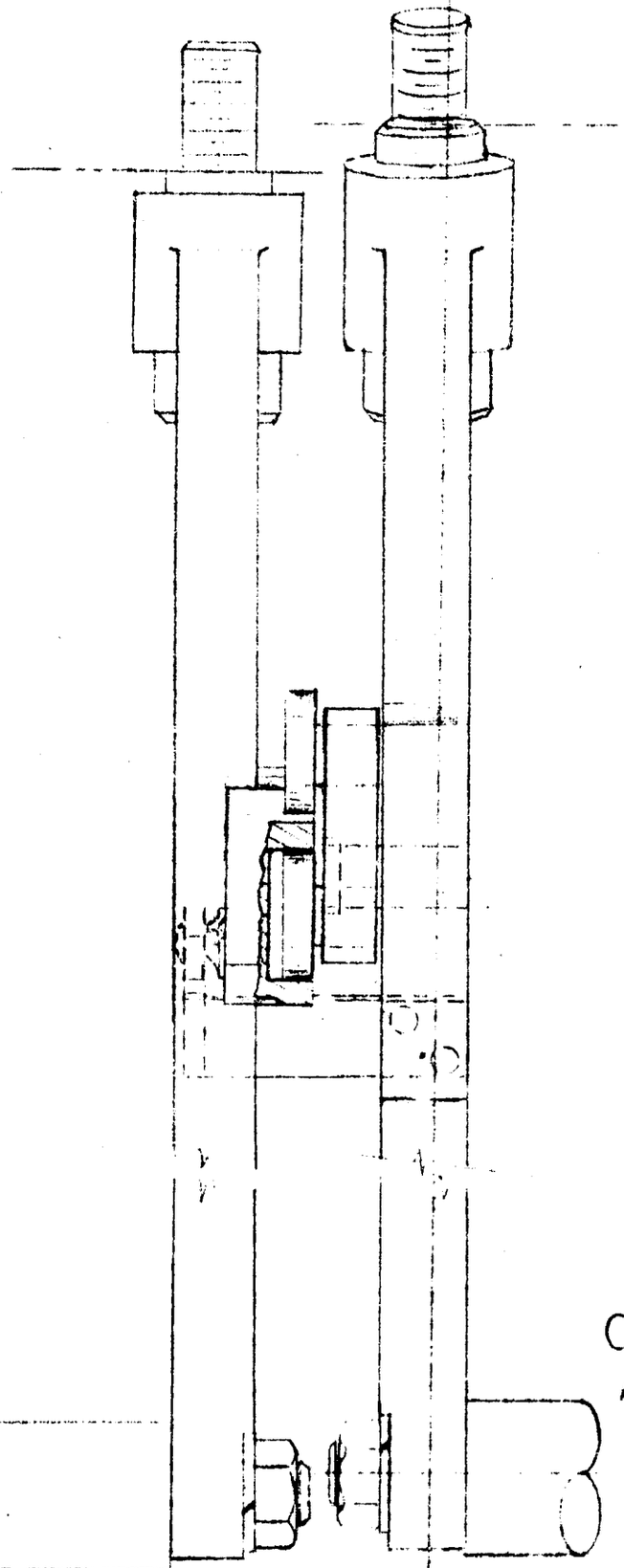

CONCEPTUAL JOINT ASS'Y/DISASSEMBLY TOOL CONCEPT

FIGURE 4.4.1-2

4.4.1 (Continued)

by slots and holes in the respective rings which are then covered by a single plate which restores the external contour of the body shell. Tapped surfaces on each ring permit the assembly of a special tool (Reference Figure 4.4.1-2) required to assemble or disassemble the sections externally. The joint is fabricated from 4330 MOD steel, heat treated to 160,000 to 180,000 psi.

4.4.2 EVALUATION

The concept was submitted to Organization 2-5560 for a preliminary evaluation, the results of which are provided on the following page.

USE FOR TYPEWRITTEN MATERIAL ONLY

3 4802 1454 REV. 8-65

COORDINATION SHEET

D2-125911-1 REV A

TO	R. V. Gambrell	2-5166	8K-51	NO. CS-ACMB-68-49
	W. R. Clark	2-5166	8K-51	ITEM NO.
CC	W. H. Jacaway	2-1630	82-26	DATE July 2, 1968
	T. P. Rona	2-1755	8C-82	MODEL

GROUP INDEX Air Carried Missiles - Structures

SUBJECT Structural Feasibility of Bayonet Missile Joint Concept

REFERENCE: (a) 2-5167-0-201 Missile Joint Concept Compendium of Missile Joints

In a preliminary qualitative structural evaluation of the missile joint concept of Ref. (a), the concept was found to be basically feasible from a structural point of view.

In the analysis of a typical missile joint application, the maximum stress in the joint was found to in the order of 40% higher than the maximum stress in a normal cylindrical section of the missile. Also, a missile with this joint compared to one without has approximately a 20% decrease in bending frequency.

A recommended change in the joint from a structural point of view is the elimination of all sharp corners to prevent local stress concentrations.

A more detailed stress analysis of this joint concept would depend on the specific configuration, weight distribution, and stiffness of the missile in which the joint is to be used. From this the mode shapes and frequencies could be found and, thus, the effect of the joint on dynamic loads, control interaction, and terminal guidance effectiveness could be determined.

Prepared by R. C. Lundquist

Approved by for S. I. Gravitz

U) 4064 5090 REV. 4/65

5.0 DESIGN CONSIDERATIONS

There are many design requirements and considerations which must be kept in mind when selecting a joint design for missiles. These are usually unique for each application but usually fall into one or more of the following categories:

(1) Ordnance Separation

(2) Raceways

(3) Sealing Joints

(4) Extraneous Requirements

(5) (To be added if necessary)

Each of these areas can be the subject of an entire document by itself. Consequently, no attempt is being made to tell a complete story. However, certain general information is useful for the design engineer to consider when making his selection and justifying its feasibility.

5.1 Ordnance Separation

Information presented in this section is largely derived from the Boeing Research Document D2-24013-1, Ordnance Components and Subsystems, Design Guide. This document should be referred to for additional details or expansion.

5.1.1 Typical Ordnance Train

Figure 5.1.1-1 shows, schematically, an ordnance train used for stage separation of an expended booster and removal of the upper stage booster skirt. (Refer also to Figure 3-1). This figure also identifies some of the ordnance components involved. They are discussed in Section 5.1.2 and pictorially shown on Figure 5.1.1-2.

USE FOR TYPEWRITTEN MATERIAL ONLY

STAGE SEPARATION AND SKIRT REMOVAL

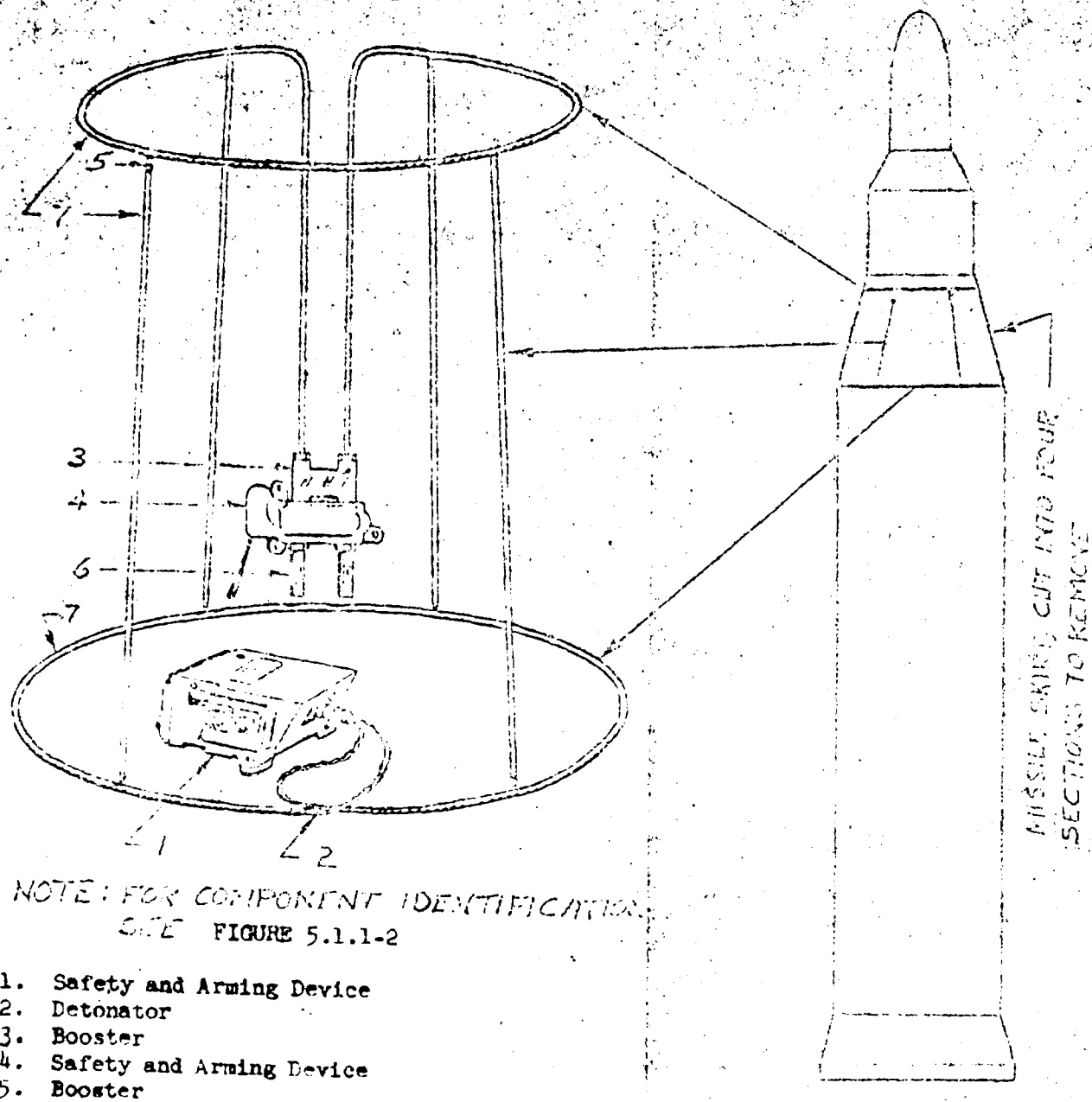

NOTE: FOR COMPONENT IDENTIFICATION SEE FIGURE 5.1.1-2

1. Safety and Arming Device
2. Detonator
3. Booster
4. Safety and Arming Device
5. Booster
6. Delay Booster
7. Linear Charge

FIGURE 5.1.1-1

STAGE SEPARATION AND SKIRT
REMOVAL COMPONENTS
(With Proven Reliability)

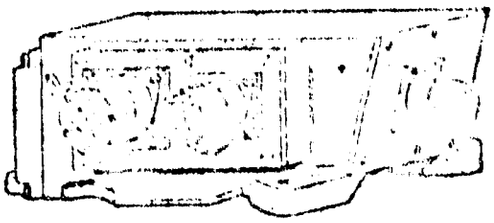

1. SAFETY & ARMING DEVICE
(.998, Confidence Level Being Determined)

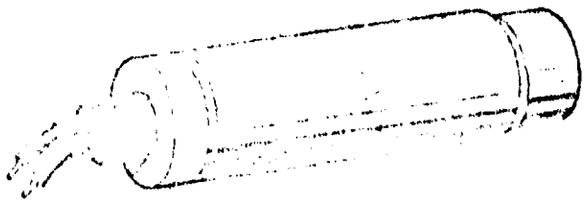

2. DETONATOR
(.999 AT 80 %)

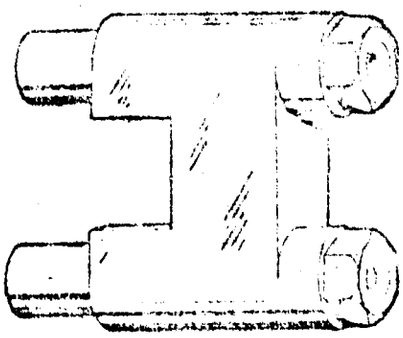

3. H BOOSTER
(.998 AT 80 %)

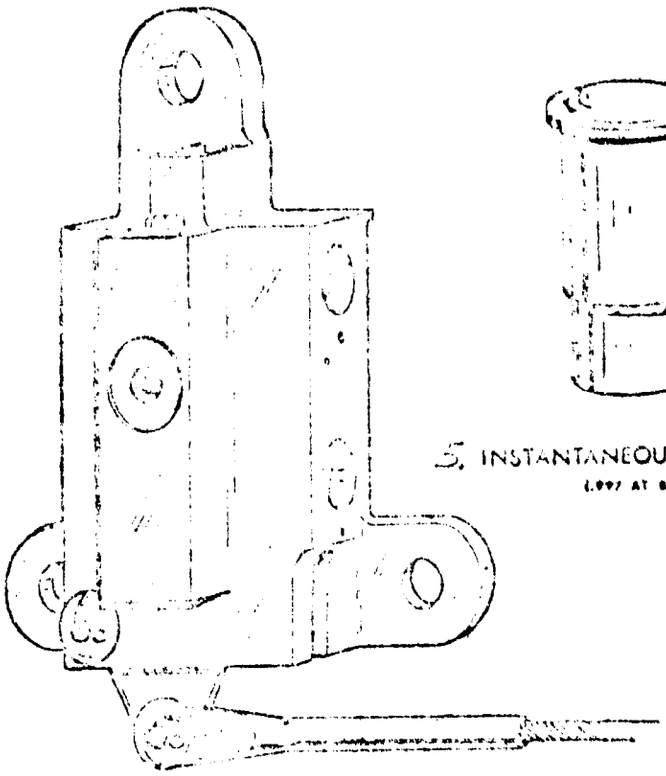

4. SAFE-&-ARM MECHANISM
(.999 AT 80 %)

5. INSTANTANEOUS BOOSTER
(.997 AT 80 %)

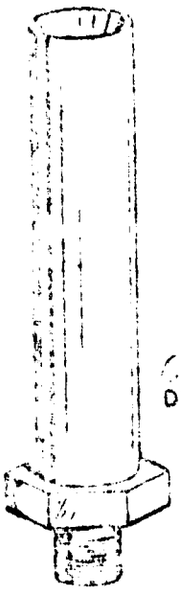

6. DELAY BOOSTER
(.99 AT 80 %)

7. LINEAR CHARGE
(.999 AT 80 %)

FIGURE 5.1.1-2

This train is a unique configuration for one application and is not meant to be universal. It gives an idea of the influencing factors involved in an ordnance separation joint design.

The sequence of events which take place in this particular design is as follows:

a. Electrical signal activates the Safe and Arm Device (1) which ignites the detonators (2).

b. The detonators (2) explode and ignite the linear charge (7).

c. The linear charge (7) explodes and separates the lower stage booster from the skirt.

d. As the lower stage pulls away, it pulls the lanyard on the Safe and Arm Device (4), arming it.

e. Safe and Arm device (4) ignites the delay boosters (6).

f. After a delay period, the delay boosters (6) ignite the primary booster (3).

g. Booster (3) explodes and ignites the linear charge (7).

h. The linear charge (7) explodes thereby igniting the boosters (5).

i. The boosters (5) ignite the charge (7) which explodes and breaks the skirt into four panels which are ejected by the force of the explosion.

5.1.2 Typical Ordnance Components

5.1.2.1 Safety and Arming Device

Description

The Safety and Arming (S & A) device is a mechanism which controls the make and break of continuity of electrical firing circuits and the make and break of continuity of the explosive train of an ordnance subsystem. One variation of this description is for a similar device containing no explosive or pyrotechnic material. Such a device has been identified as Safe and Arm switch, Arm-Disarm Mechanism and Safety Switch, all performing the same function of make and break of electrical firing circuits.

Application

The S&A device is incorporated into an ordnance subsystem which, if inadvertently activated, would result in a catastrophic incident with possible loss of life and property.

5.1.2.2 Explosive Release Mechanism

General

Explosive release mechanisms affect release of structural sections, panels, doors, pods, etc., by explosive or gas pressure failure of retaining hardware. The common release hardware used in explosive releases are explosive bolts, separation nuts (gas or explosive actuated), linear charge and linear shaped charge. The description of each type of release hardware, and common application of each type is noted below.

a. Explosive Bolt

1. The explosive bolt is a special hollow bolt which is fractured by an internal explsove charge. The explosive charge is normally a high order detonation material either permanently loaded during manufacture or inserted later in the form of a cartridge. There are many different

USE FOR TYPEWRITTEN MATERIAL ONLY

5.1.2.2 Continued

configurations of explosive bolts, most of which have considerable blast and fragmentation when actuated. A few manufacturers do state that their explosive bolt will operate with no blast or fragmentation.

2. Application

Explosive bolts are used to release tension and shear loads. The application to release tasks requiring simulataneous actuation of more than four release points is not recommended because of reliability penalties.

Design for explosive bolt application should include evaluation of load ratings vs weight and envelope of the bolt, weight and envelope of structure and for shock and blast effects of the particular bolt being considered. Design for installation of explosive cartridge after bolt installation is complete.

b. Separation Nut

1. Description

The separation nut is designed for installation in a manner similar to a regular nut in structural joining except that it will release the load when actuated by an explosive or gas generator charge. In the preferred configuration the explosive or gas generator charge is contained in a separate component to be installed after the assembly operation is complete.

There are several configurations of release nuts ranging between the release of gas and fractured sections of the nut to those which release no gas or fractured sections when actuated. Each type will perform a satisfactory release.

USE FOR TYPEWRITTEN MATERIAL ONLY

5.1.2.2 Continued

2. Application

The release nut must be used only to release tension loads. Clearance holes for the mating bolts are required to allow bolt pull-out when the release nut is actuated. Shear loads must be controlled by shear pins or similar means.

Those release nuts actuated by high order detonation will, in most cases, release some explosive blast to the surrounding area but are relatively free from harmful fragmentation. In one application such a device has been enclosed in a light weight container and qualified for use in an explosive atmosphere. Release nuts actuated by gas pressure will release very little, if any, gas and will generate no shock.

Release nuts will normally be load rated in accordance with the load rating of the mating standard bolt.

Release nut application to release tasks which require simultaneous actuation of more than four points is not recommended because of reliability penalties.

c. Linear Charge

1. Description

Linear charges are relatively lightly loaded, continuous, explosive charges encased in metalic or plastic tubular containers. The linear charge is also known as Mild Detonating Fuse (MDF), Prima Cord, and Low Energy Detonating Cord (LEDC). The explosive specified for most installations is lead or aluminum encased RDX or PETN because of high reliability, low cost, temperature tolerance, safety and a high detonation velocity with resultant high energy shock wave release.

USE FOR TYPEWRITTEN MATERIAL ONLY

5.1.2.2 Continued

2. Application

Linear explosive is used to rupture structural fittings for separation of missile sections and for propagation of detonation from one point to another in an explosive subsystem. RDX explosive has been qualified for use at altitudes above 200,000 feet in the Minuteman stage separation system. There has been no work done, however, to verify performance of any linear explosive after long exposure, (up to one year), to space environment. The application of explosives to any task, while exposed to cryogenic temperature, may cause extreme performance variation, see reference d.

d. Linear Shaped Charge

1. Description

Linear shaped charges are similar to Item c, Linear Charge, except that the cross section is shaped to focus a high energy stream in a predetermined direction to produce a cutting action. The linear shaped charge is also known as "Flexible Linear Shaped Charge (FLSC)".

2. Application

Linear shaped charge (FLSC) is used to cut a structural material for vehicle destruction and to separate sections from a vehicle. The explosive cutting performance is predictable for any of the common explosive loads except at cryogenic temperatures.

The installation of FLSC is most often accomplished during structural assembly because of the requirement for accurate location and orientation. The structure, with explosive installed, must then be considered an explosive component and will require special restrictions during storage and shipping.

USE FOR TYPEWRITTEN MATERIAL ONLY

5.1.2.3 Boosters

Description

The booster is an augmenting explosive or pyrotechnic component of moderate sensitivity, which is used in the explosive or pyrotechnic train to step-up the energy output of the primary material to initiate the comparatively insensitive main charge. The booster may be in the form of pressed pellets or in shaped containers as required by a particular system, see Figure 5.1.1-2 for additional example.

Application

Boosters will be applied to the initiation train of explosive components to step-up the detonation rate and energy release of the initiating or donor component to a level required to detonate the base charge or receiver component of an explosive train.

Boosters may also be applied to the initiation train of a gas generator or solid propellant motor to step-up the release of hot gases and burning particles into the main charge for more rapid build up of main charge gas pressure.

In both of the above systems, the booster may be incorporated only to reduce the total quantity of sensitive, primary explosive in the initiation components.

In the development of new explosive or gas generating systems, it is often possible to use an off-the-shelf booster in the initiating train. This must be done, however, with full cooperation of the booster manufacturer since an incorrect selection could compromise system performance.

USE FOR TYPEWRITTEN MATERIAL ONLY

5.1.2.4 Initiators

Description

An initiator is the first component activated in an ordnance train. It is activated by either electrical, gas pressure, or mechanical means to start the chain of events which results in ignition or detonation of the main charge. The term "initiator" is also used to identify some components in a seat ejection system which may not be the first units fired. However, the function is basically the same as noted above.

Initiators are identified by the following common names:

a. Detonator - An initiator loaded with a high order detonation material to initiate detonation in an explosive charge.

b. Squib - An initiator loaded with a flame and gas producing material to ignite deflagration type devices such as gas generators and rocket motor igniters. The term "squib" is also a common slang term used conversationally by some people to identify any initiating device or small pressure cartridge. (This use creates some confusion.)

c. Primer - Nomenclature used by some organizations for electrical or mechanical fired initiators which accomplish the same functions described in 1 and 2 above.

There are two basic types of electrically fired initiators, the conventional hot wire and the explosive bridge wire (EBW) types. The appearance and function of each type are quite similar. However, the control subsystem differ considerably.

USE FOR TYPEWRITTEN MATERIAL ONLY

5.1.2.4 Continued

Application

An initiator is used to start every detonating or deflagrating function. It may be permanently assembled in the pyrotechnic or explosive train (such as a primer in a rifle cartridge) or preferably designed for installation after the remainder of the subsystem has been installed or assembled.

Every precaution should be taken to preclude the chance of a mix-up between detonation and deflagrating type initiators in any installation. The two functions are not interchangeable and will probably result in a malfunction if improperly applied.

The application of initiators to systems that will be exposed to space environments for long periods prior to actuation, can only be accomplished with some risk. There has been no testing accomplished to verify explosive or propellant performance after such exposure.

Electrically fired initiators are normally incorporated into a subsystem in such a manner that complete redundancy is achieved. The redundancy most often includes dual sources of power, dual switching, dual wiring, and dual bridgewires. The dual bridgewires may be incorporated as two bridgewires in one initiator or two, single bridgewire initiators. In the case of two single bridgewire initiators, either initiator must be capable of performing the complete function.

USE FOR TYPE WRITTEN MATERIAL ONLY

5.1.2.5 LIST OF REFERENCES

Document D2-24013-1, "Ordnance Components And Subsystems Design Guide", should be referred to when designing ordnance activated separation joint systems. In addition the following references are provided:

a. D2-24052-1 Electro-Explosive Initiation Systems, Design Guide Lines

b. AFM 127-100 Explosive Safety Manual (Air Force Manual)

c. ORDP 20-270 Propellant Actuated Devices (Library File No. U85 P 20-270)

d. T5-6025 Test Report, Explosive Performance In Extreme Cold (Saturn)

e. MIL-I-23659 (U. S. NAVY - BU-WEAP) Initiators, Electric, Design and Evaluation of

f. AFETRP 80-2 General Range Safety Plan (Air Force Eastern Test Range Pamphlet)

g. Machine Design, July 4, 1968, (pp 116 - 122) Designing With Explosive Devices - Robert F. Reinking, Project Engineering Supervisor, Aerospace Components Div., Atlas Chemical Industries, Inc., Valley Forge, Pa.

USE FOR TYPEWRITTEN MATERIAL ONLY

USE FOR TYPEWRITTEN MATERIAL ONLY

5.2 JOINT TRADES EXERCISE

Frequently the designer is faced with the selection of a joint concept from a number of available alternatives. The use of a manufacturing approach to make the decision is demonstrated by the following example which uses case segmented joint concepts developed in the Minuteman Program.

5.2.1 MANUFACTURING CONSIDERATIONS

The six joints shown on Figure 5.2.1-1 have been evaluated on the basis of producibility in terms of fabrication time and the relative importance of the two. All joints are considered to be interchangeable and ultimately producible.

5.2.1.1 SUMMARY

Of the joint concepts considered, the taper pin and clevis joint have been selected as being the most desirable in terms of producibility. The joint requires more installation effort than some of the others. However, the findings indicated that initial fabrication time far outweighed field assembly time for the program concept of which this study was a part.

The primary advantage of the taper pin and clevis joint design concept is that it somewhat relieves the requirement for close hole alignment that most other designs require. This, of course, reduces part fabrication costs.

5.2.1.2 DESCRIPTION

5.2.1.2.1 STRAIGHT PIN JOINT

Joint Concept No. 1, the clevis and straight shear pin, would require both the highest fabrication time and the highest assembly time of all the joints examined. The reasons for this are the extraordinary dimentional tolerances that would have to be maintained in making the rings, and

5.2.1.3.1 Continued

the level of alignment precision required in the joining operation. The joint is unlike the present Minuteman joint in that the fasteners carry the compression load. This requires that there be a close (Class I) fit between pin and matching holes. The joint is similar in concept to the type of shear joint used for Bomarc, but Bomarc had a 3 foot diameter whereas this design is for a 10 foot diameter. Of even greater significance is the method of assembly. Whereas Bomarc joints could be assembled only with the aid of elaborate holding fixtures and the most careful attention, this joint (No. 1 on Fig. 5.2.1-1) can be assembled with a minimum of mechanical aids and in a suspended mode.

To insure success of assembly, the dimensional accuracy of the related parts must be near perfect. Normal tolerances for master tool construction, hole coordination, axial alignment and closeness of fit between pin and holes must be abandoned in favor of super precision work. Increasing accuracy requirements from thousandths of an inch to tenthousandths of an inch would have a marked effect on fabrication costs.

5.2.1.3.2 TAPER PIN JOINT

Although at first appearance this design concept appears to be about equal in complexity to the straight pin concept, in reality they represent opposite ends of the producibility spectrum in terms of fabrication costs. Although there remains some question as to whether or not the taper pin design here considered can be made interchangeable, it was assumed that a satisfactory design can be achieved. Such a design would provide for a positive fit, with no allowance, while at the same time the

USE FOR TYPEWRITTEN MATERIAL ONLY

U3 4802 1484 REV. 8-65

	CASE SEGMENTIN		
BASIC JOINT TYPE	PIN AND		
TO JOIN	STEEL CASE		
JOINT VARIATIONS	STRAIGHT PIN U.T.C.	TAPERED PIN (With retaining ring) THIOKL'S LOCKHEED	TAP (
	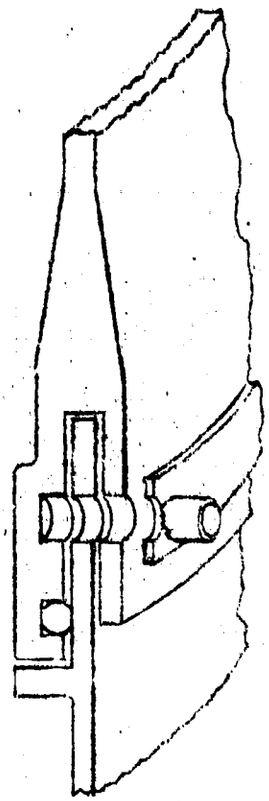	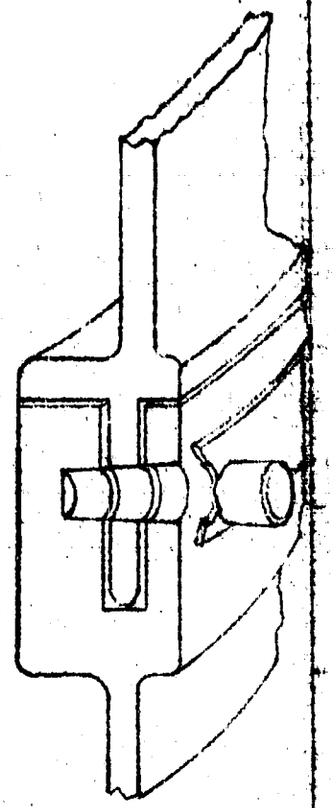	
ARRANGEMENT No.	1	2	

NOTE: The purpose of these early and preliminary joint arrangements is to provide examples for the trades exercise of this section. Their principal value as design concepts is probably that they illustrate features most to be avoided in joint design considerations. (See text.)

A

1

ENTING JOINT CONCEPTS

AND CLEVIS			LOCKSTRIP	
CASE		GLASS CASE	STEEL CASE	GLASS CASE
PIN (g ring) HEED	TAPERED PIN (Threaded)	TAPERED PIN ROCKETDYNE	AEROJET	
	3	4	5	6

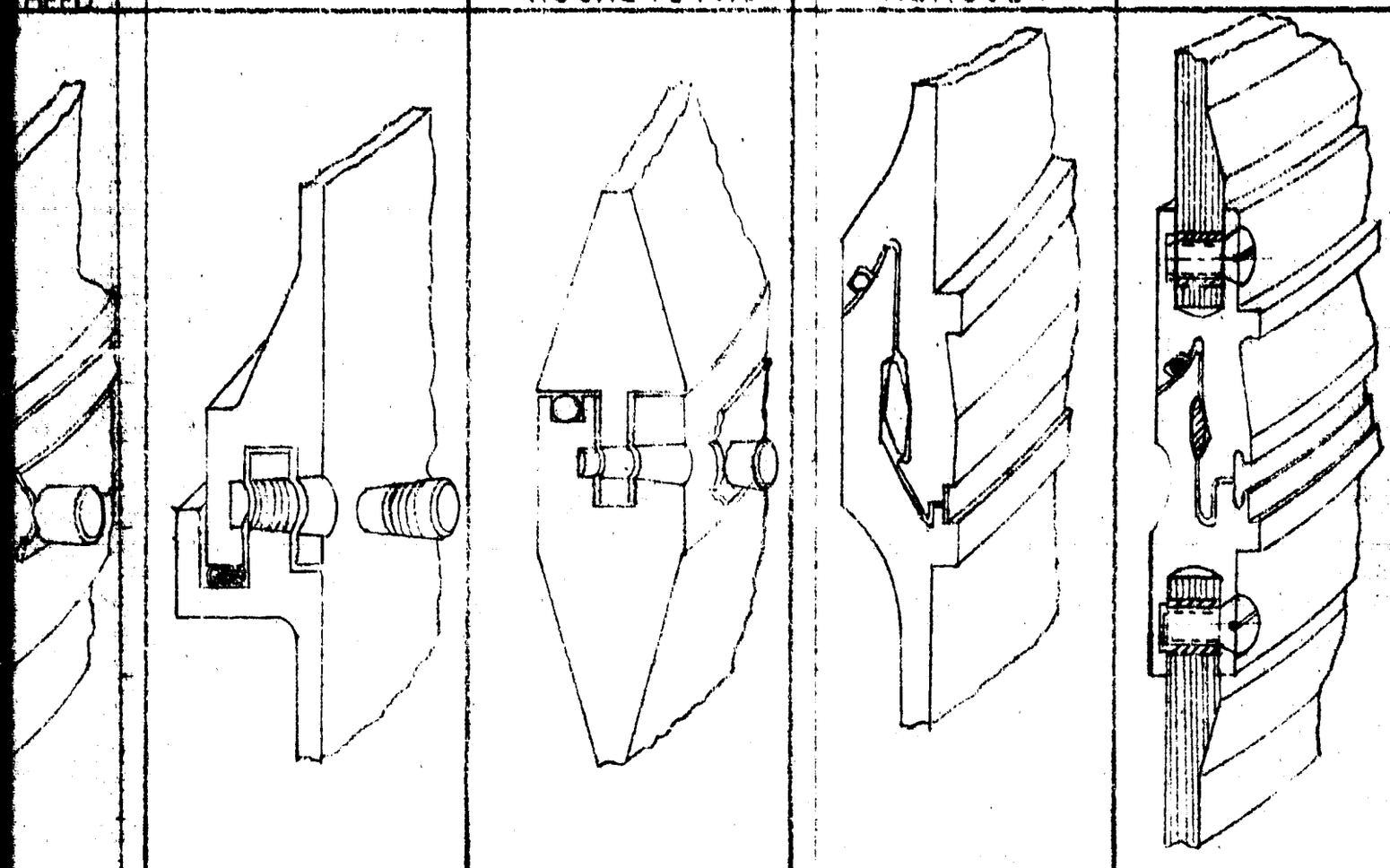

FIGURE 5.2.1.-1

5.3.1.2.2 Continued

individual part tolerance could be relatively large. It is this less precise dimensional control that brings the cost of fabrication down, and the positive seating of one joint ring on the other (as on present Minuteman) that reduces the assembly time.

5.2.1.2.3 TAPER PIN, THREADED

The threaded pin concept is more expensive to fabricate than the simple taper pin, because of the threads, taps and the need for a separate tapered insert. Threaded parts are, of course, more subject to damage than most other kinds of fasteners and the inserts would have to be replaced if the threads were to be damaged.

Assembly time for the threaded taper pin is greater than that for the simple tapered pin because a more precise alignment relationship must be achieved prior to pin insertion. On the other hand, disassembly should require less time because the pins can be extracted directly. The simple taper pins may have to be freed by a puller device. Finally, the effectiveness of a tapered threaded bolt, particularly in vibration, is highly questionable.

5.3.1.2.4 TAPER PIN (GLASS CASE)

There would be a slight increase in fabrication costs for this design over a similar joint type in a steel case. The difference would be due to a requirement for special drilling procedures using high speed, diamond impregnated cutting tools, and an expected higher frequency of part rejection. Assembly time should be identical with that required for the steel case application.

USE FOR TYPEWRITTEN MATERIAL ONLY

U3 4807 1494 3 F V. 1-65

5.2.1.2.5 LOCKSTRIP JOINT (STEEL CASE)

The lockstrip design is moderately more expensive to produce than the taper pin. Although, like the taper pin design, it can be produced using normal fabrication tolerances, it has more surfaces and more complicated surface relationships that necessitate the higher fabrication costs. Because of its self-aligning characteristics, it requires the least assembly time of all the designs considered. If the frequency of assembly and disassembly were to be relatively high, the lockstrip would be a good design choice.

5.2.1.2.6 LOCKSTRIP (GLASS CASE)

As can readily be seen from the drawings, the additional complexity associated with attaching metal rings to fiberglass case structure would substantially contribute to the cost of this design concept. The assembly time would, of course, be the same as that for the other lockstrip joint.

5.2.1.3 ANALYSIS

5.2.1.3.1 RELATIVE PRODUCIBILITY

The direct factory manhours associated with the actual fabrication of the various joint ring design concepts tend to vary over a rather wide range, from 340 manhours to 900 manhours. This is a ratio of 2.65 between the costs of the most expensive design and the least expensive. Tooling costs were not included because of the uncertainty of amortization factors, but if they had been considered, the spread would be even greater. The design concept considered to have the highest fabrication costs would also require the most expensive tooling. A more detailed explanation of these statements appears later.

USE FOR TYPEWRITTEN MATERIAL ONLY

U.S. 4807 1434 REV. 8-65

5.2.1.3.1 Continued

RELATIVE PRODUCIBILITY OF ENGINE CASE
SEGMENTING JOINT CONCEPTS

	Joint Type	Parts Fabrication Estimated Manhours	*Relative Producibility
1.	Straight Pin	900	2.65
2.	Taper Pin	340	1.00
3.	Taper Pin, Threaded	500	1.47
4.	Taper Pin (Glass Case)	400	1.18
5.	Lockstrip (Steel Case)	380	1.12
6.	Lockstrip (Glass Case)	700	2.06

FIGURE 5.2.1-2

* Based on the establishment of 1.00 for baseline and assigning this value to the least expensive design

USE FOR TYPEWRITTEN MATERIAL ONLY

U3 4807 1414 REV. 8-65

5.2.1.3.2 RELATIVE ASSEMBLY EASE

The manhours associated with assembly and disassembly functions, although much smaller in magnitude, vary over a range almost as great as that required for part fabrication. Here the ratio is 1 : 2.26 between the least and the most time consuming concepts. This could be of real significance if assembly and disassembly became a frequent occurrence, and in any case is important from the standpoint of possibly prolonging the field assembly operation.

RELATIVE ASSEMBLY EASE ASSOCIATED WITH
ENGINE CASE SEGMENTING JOINT CONCEPTS

Joint Type	Estimated Manhours Assembly	Dis-Assembly	*Relative Assembly Ease
1. Straight Pin	7.5	7.0	2.26
2. Taper Pin	4.0	6.0	1.56
3. Taper Pin Threaded	6.7	4.7	1.78
4. Taper Pin (Glass Case)	4.0	6.0	1.56
5. Lockstrip (Steel Case)	3.0	3.4	1.00
6. Lockstrip (Glass Case)	3.0	3.4	1.00

FIGURE 5.2.1-3

* Based on the establishment of 1.00 for baseline, and assigning this value to the design requiring the least assembly and dis-assembly time.

5.2.1.3.3 CONCLUSIONS

It can be seen from Figure 5.2.1-2 that the taper pin joint concept is the easiest to fabricate, and from Figure 5.2.1-3 that the lockstrip joint concept is the easiest to assemble. The lockstrip is somewhat more costly to fabricate than the taper pin concept, while the latter is about 1 1/2 times more time consuming to assemble.

U3 4602 1434 ORIG. 4-65

5.2.1.3.3 (Continued)

There are no doubt several criteria by which the relative importance of these different manufacturing operations might be measured. In the absence of specific direction in this matter, however, cost was assumed to be the primary factor. On the basis of cost above, it would be necessary to perform the assembly and disassembly operation 12 times before installation costs would exceed initial fabrication costs. Since the operational concept being considered calls for only 8 removals per wing per year after initial emplacement, it would be about 10 years before assembly costs associated with joint design equaled the initial cost of joint fabrication.

U3 4807 1434 ONIG, 4-61

5.3 SEALING JOINTS

When joints must act as efficient seals as well as structural members, certain general practices must be followed. The following is a "check list" which the engineer can use in his design development. It does not cover metal seals.

(a) Sealing material should never "work" from the loads passing through the joint.

(b) Shear loads carried by the joint should bypass the seal if possible.

(c) The seal is subjected to the same thermal, chemical, and pressure environment as the rest of the joint. It must be designed for such.

(d) Avoid thin, narrow gaskets. Their reliability is poor.

Reliability is related to the pressure required to achieve a seal which is proportional to gasket area. Pressure is also proportional to the width to thickness ratio as shown in Figure 5.3-1. This figure shows the minimum sealing stress required for a cork and rubber gasket material. The curve is essentially the same for any material, the only difference being a vertical shift. Figure 5.3-2 indicates the relative differences between many materials.

USE FOR TYPEWRITTEN MATERIAL ONLY

U 4807 1494 REV. 8-65

MINIMUM SEALING STRESS FOR REPRESENTATIVE NONMETALIC GASKETS

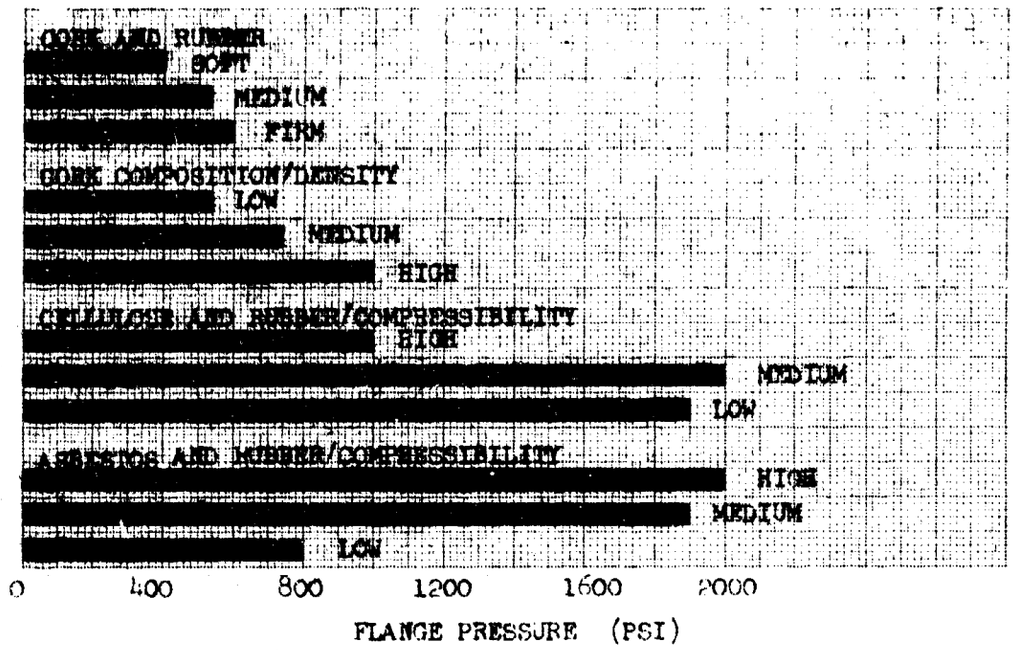

FIGURE 5.3-1

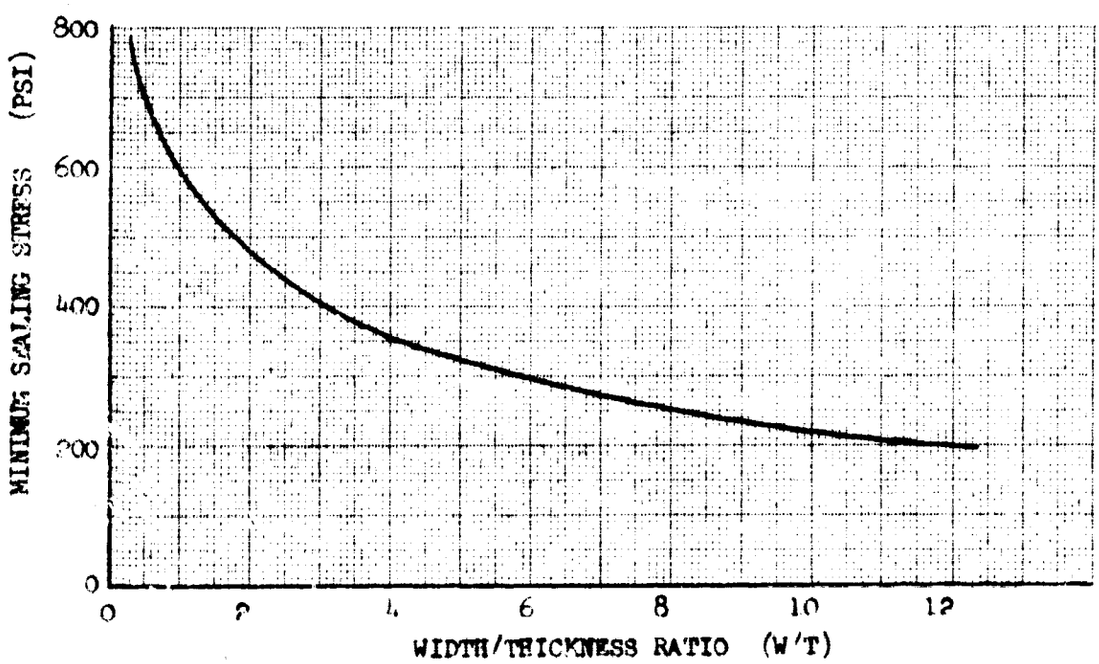

FIGURE 5.3-2

6.0 JOINT DESIGNS FOR LARGE, SEGMENTED, FILAMENT WOUND MOTOR CASES

Because their potential is so great, much emphasis is currently being placed on developing large segmented rocket motor cases. To realize weight and cost savings from the use of fiberglass in such applications, a lightweight reliable mechanical joint is required. However, the low bearing and shear strength of resin laminates force the engineer to develop unique joint designs encompassing metal to fiberglass or even fiberglass to fiberglass laminates, capable of developing the full strength of the basic fiberglass structure.

6.1 MOTORCASE CONCEPTS CONSIDERED

6.1.1 In this section, joint designs are considered for the two promising concepts for segmenting filament wound rocket motor cases, illustrated in Figure 6.1.1-1. These are (a) the circumferentially segmented case (or segmented concept), and (b) the longitudinally segmented case (or modular concept). The segmented concept consists of a forward closure, aft closure, and cylindrical center segments connected by lightweight pinned joints. The modular concept is an assembly of several modules, composed of filaments oriented on meridional lines, that form portions of the forward and aft closures and are mechanically fastened to the forward and aft polar rings. The outer cylinder is of prefabricated hoop rings or circumferential windings.

6.1.2 SEGMENTED CASE LIGHTWEIGHT JOINT

6.1.2.1 Since mechanically fastened joints are necessarily thicker than the case, they offer greater restraint to radial expansion than does the case. If the joints are reinforced with steel, the differential growth is further exaggerated by the contrast in elastic moduli (10.5×10^6 psi for glass vs 30×10^6 psi for steel). To minimize the contrast, use was made of the ability of the filaments to orient themselves. If the joint is located at the tangent point of the closure and the cylinder, the closure contour and its filament path can be readily calculated to

USE FOR TYPEWRITTEN MATERIAL ONLY
U S 4802 1434 REV. 6-65

USE FOR DRAWING AND HANDPRINTING — NO TYPEWRITTEN MATERIAL

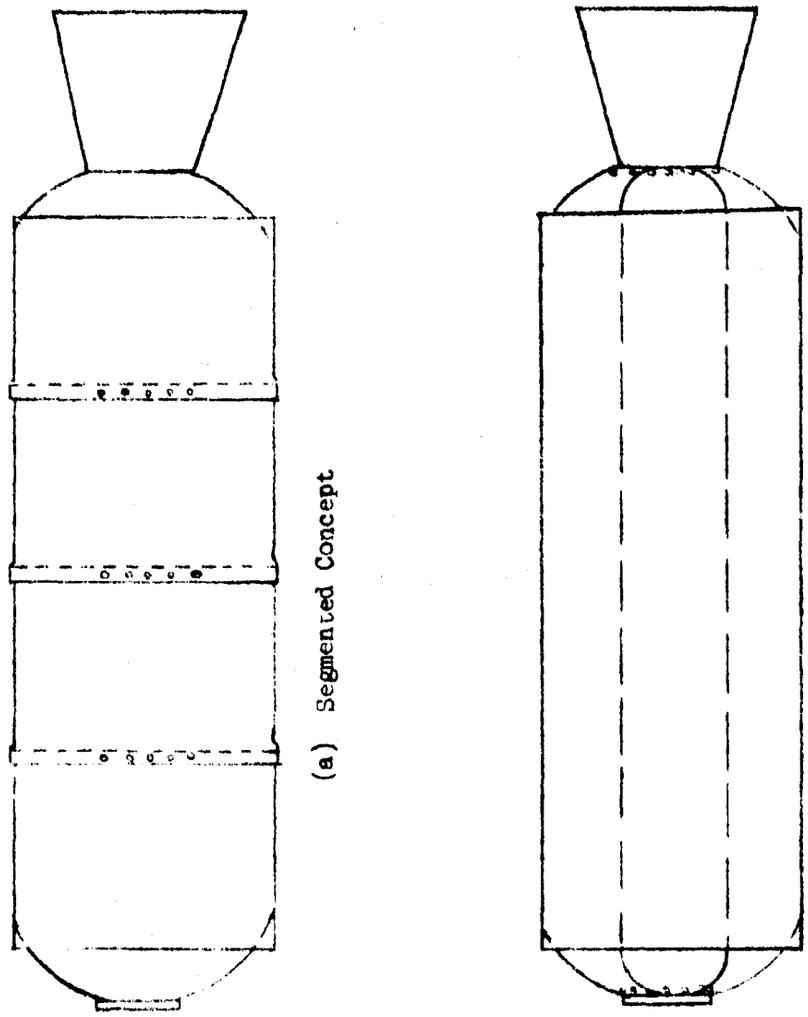

(a) Segmented Concept

(b) Modular Concept

SEGMENTING CONCEPTS FOR FILAMENT WOUND ROCKET MOTOR CASES

FIGURE 6.1.1-1

USE FOR DRAWING AND HANDPRINTING — NO TYPEWRITTEN MATERIAL

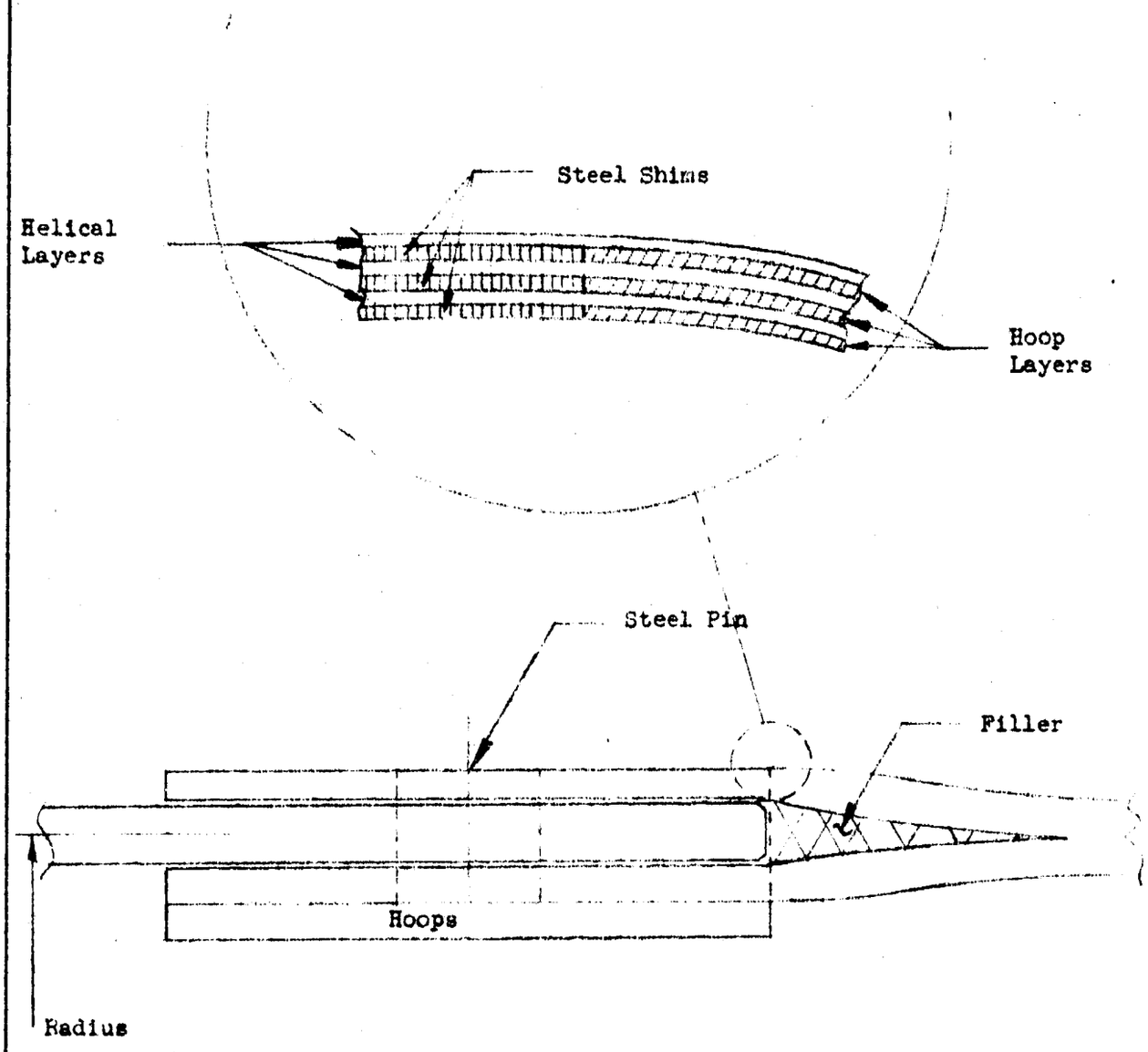

A CLEVIS JOINT FOR FILAMENT WOUND CASES

FIGURE 6.1.2-1

6.1.2.1 (Cont'd)

obtain the radial growth required to eliminate discontinuity forces. The case growth can be made to coincide with the joint growth by using the critical angle principle; that is, as the wrapping angle exceeds 54 3/4 degrees, the ratio of hoop strain to helical strain decreases.

Because rocket motor performance requirements for most applications, dictate joint locations and winding parameters, the joint concept developed was designed to provide the same radial restraint as the case. Trade studies indicated the clevis type joint of Figure 6.1.2-1 to be the most efficient concept. The clevis joint is composed of thin, high strength steel shims, laminated between the helical layers of the case with the hoop windings wound outside the joint region. It should be noted that the hoop and helical windings are interspersed in the case and that the hoop layers terminate at the start of the shims. The interspersion of hoop and helical windings requires an external skirt attachment. A design analysis of the joint is provided in the Reference (a.) document.(See 6.3).

6.1.2.2 SKIRT ATTACHMENT JOINT

6.1.2.2.1 Experience has indicated that under the influence of high longitudinal strain in the case and compressive strain in the skirt, a pure resin bond between skirt and case is unsatisfactory, or at best unreliable. To circumvent this problem, a concept was developed which uses a layer of elastomeric material between skirt and case to reduce shear stresses and improve reliability. This joint is shown schematically in Figure 6.1.2-2. A free body representation of the effect of both Skirt Compression and Case Growth on the joint is shown on Figure 6.1.2-3. An analysis of such a joint together with a discussion of its fabrication problems is included in Reference (a.).

USE FOR TYPEWRITTEN MATERIAL ONLY

U3 4602 1434 REV. 8-65

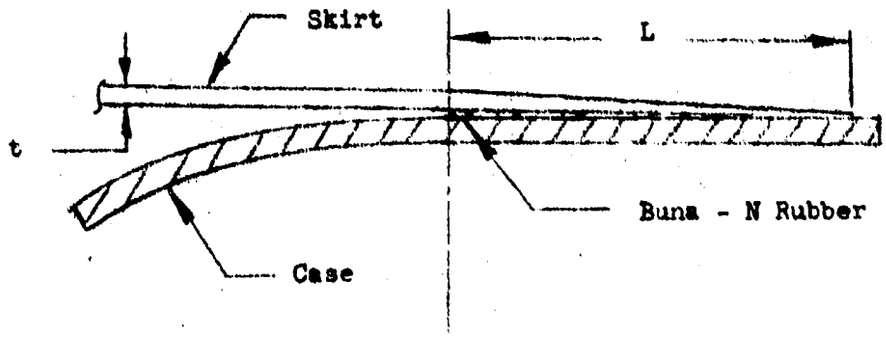

ELASTOMERIC SKIRT ATTACHMENT

FIGURE 6.1.2-2

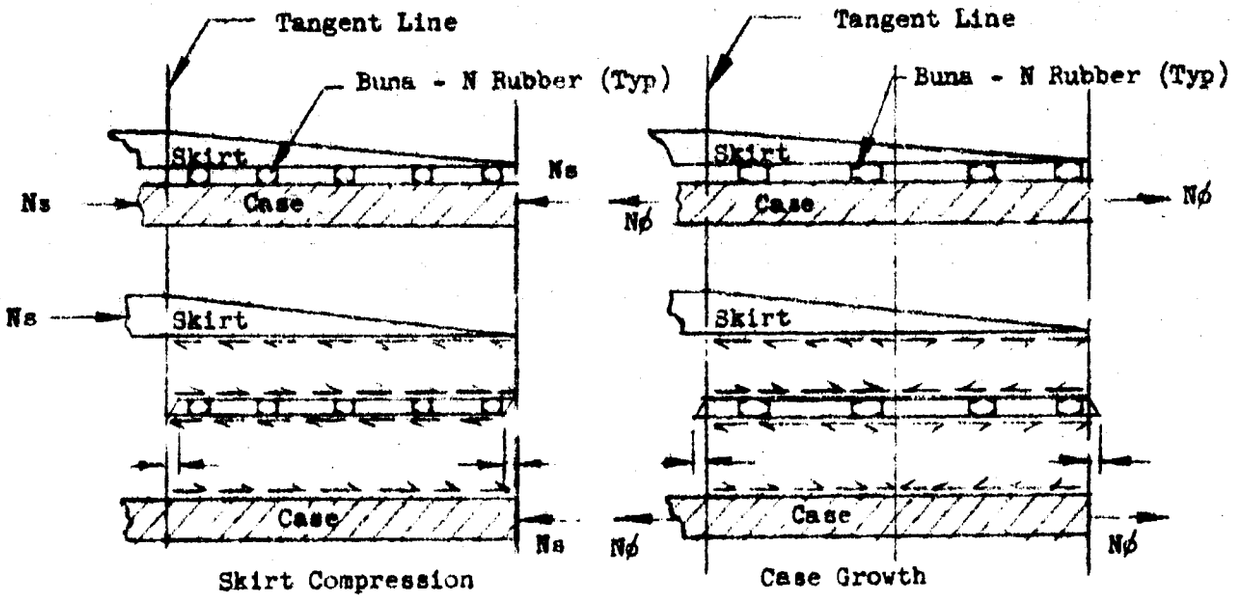

SHEAR STRESS IN AN ELASTIC BOND

FIGURE 6.1.2-3

USE FOR DRAWING AND HANDPRINTING — NO TYPEWRITTEN MATERIAL

6.1.3 MODULAR MOTOR CASE CONCEPT

6.1.3.1 The two basic elements of the modular concept are the module and the hoop ring. The modules are preformed and precured with all fibers oriented in the longitudinal direction, extending beyond the tangent lines to form either or both domes. The domes described by the modules consist of only longitudinal fibers, hence, their contours must describe a "no hoop load dome" which is discussed in greater detail in the "Dome Analysis" section of Reference (a.) . The circumferential strength of the cylindrical section is supplied by hoop rings which are fitted over the assembled modules. These hoop rings also consist of precured and preformed unidirectional fibers.

6.1.3.1.1 MODULE JOINT (TYPE A)

The tension load in the module is transferred into steel foil which is integrally wrapped with the module. The foil in turn carries the load into a bolted joint connecting the adapter ring (Reference Figure 6.1.3-1). The analysis is basically similar to that presented for the segmented joint referenced in 6.1.2-1.

6.1.3.1.2 MODULE JOINT (TYPE B)

This light weight clevis joint provides a unique design which eliminates bending and assures strain compatibility at the polar ring equal to that carried by the outer plate.

6.1.3.1.3 FABRICATION PROBLEMS

Steel sheets designed to carry bearing loads in the joint areas are laminated between the glass. Any necessary reinforcement or filler cloths are added in conjunction with the steel laminates. When loading permits, the skirts are wrapped as an integral part of a hoop ring instead of using the elastomeric bond discussed in 6.1.2.2.1 (Reference Figure 6.1.3-3). The following requirements demand extreme care in laminating the steel with the module:

USE FOR TYPEWRITTEN MATERIAL ONLY

U3 4002 1494 REV. 6-65

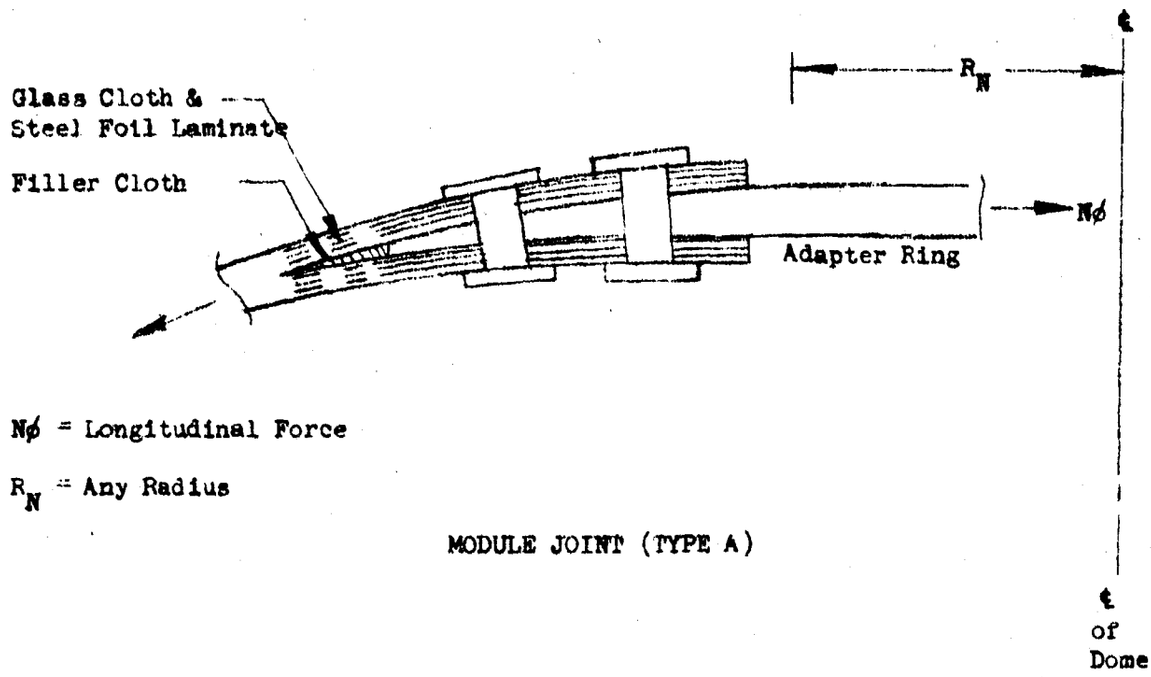

$N\phi$ = Longitudinal Force

R_N = Any Radius

MODULE JOINT (TYPE A)

FIGURE 6.1.3-1

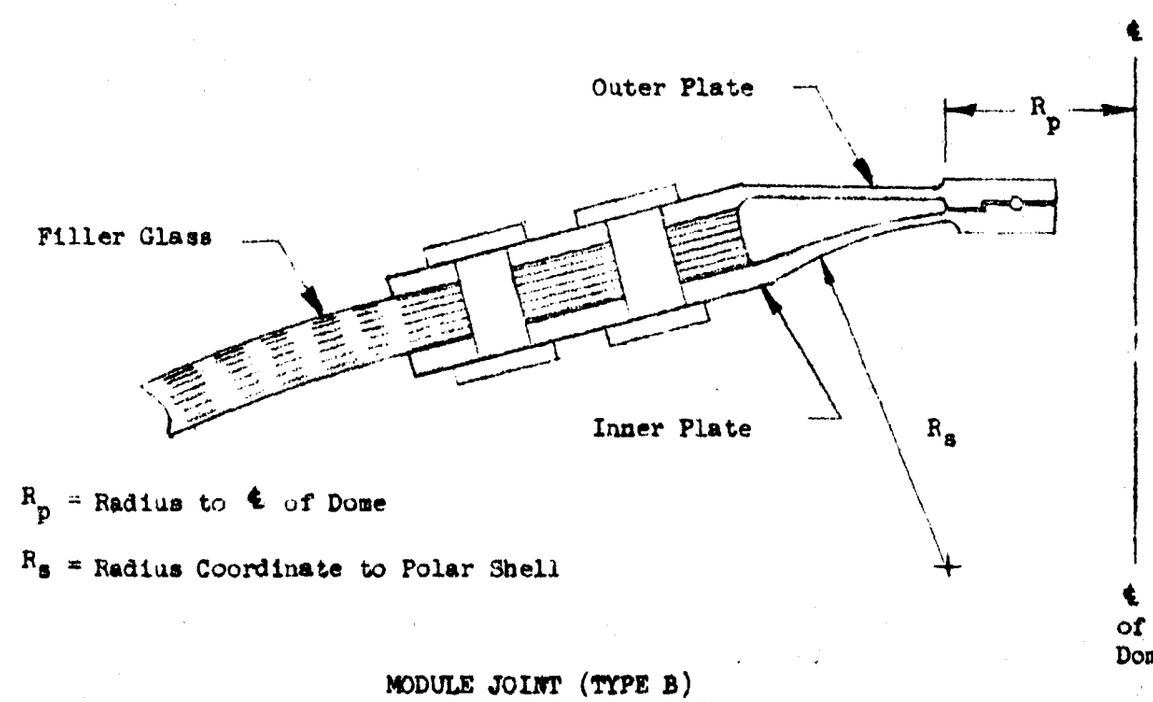

R_p = Radius to ℄ of Dome

R_s = Radius Coordinate to Polar Shell

MODULE JOINT (TYPE B)

FIGURE 6.1.3-2

USE FOR DRAWING AND HANDPRINTING — NO TYPEWRITTEN MATERIAL

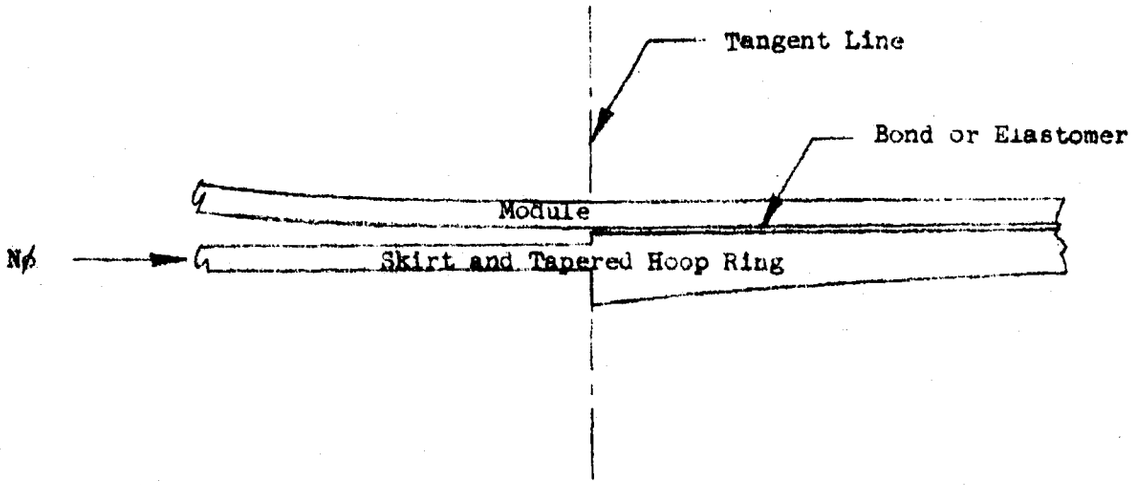

HOOP-SKIRT RING

FIGURE 6.1.3-3

USE FOR DRAWING AND HANDPRINTING — NO TYPEWRITTEN MATERIAL

6.1.3.1.3 (Cont'd)

A. Positive positioning and holding of the foil from winding through cure.

B. A smooth transition into the joint maintained to prevent bridging or winding material.

C. Provisions to guarantee that during the cure cycle, the greater coefficient of thermal expansion of the foil is recognized and that steps are taken to minimize the difference.

D. The foil shall be cleaned and primed in order to provide a bond capable of carrying large shear loads.

USE FOR TYPEWRITTEN MATERIAL ONLY

U.S. 4902 1434 REV. 8-65

6.2 RECENT STATE OF THE ART DEVELOPMENTS IN THE SHIM JOINT CONCEPT

Building on earlier technology, the Bendix Corp. conducted a study, the results of which are presented in this section. It is considered typical of similar efforts conducted by other sources and represents an advance in the state of the art of Shim Joint Concept development. The information source is identified by reference b. together with related references a., and c. through i. of paragraph 6.3.

6.2.1 ABSTRACT

This paper describes a shim joint concept that was developed to improve the efficiency of joints for attaching to composite material structural members. The shim joint concept reinforces the composite material in the region of the joint with thin metallic layers which permits employing a conventional shear pin joint between the composite members and a mating fitting. Design parameters are defined and design data are established. Improved methods for fabricating the reinforced tube ends and improved testing fixtures are developed. An advanced optimization technique has been applied to the design of the shim joints. It is shown that design parameters can be optimized conveniently by the structural synthesis approach in determing the minimum weight configuration. The results indicate that the shim joint concept can be successfully applied to composite members without prohibitive attachment weight penalties.

6.2.1.1 INTRODUCTION

It has been determined that structural tubes fabricated of composite materials would be lighter than tubes made from more conventional materials such as steel, aluminum, or titanium alloys. However, even though structural members can be made lighter with composite materials than with the more common metal alloys, the weight of reinforcing composite tube ends and joining them to end fittings will impose penalties. As a result, the significant weight saving potential of composite materials may tend to be offset somewhat by the weight

USE FOR TYPEWRITTEN MATERIAL ONLY

U B 4003 1434 REV. 8-66

penalties imposed by joining the tubes to end fittings. The design of efficient, lightweight joints between composite tubes and end fittings is, therefore, a necessary element in the development of composite structural components and requires formulation of design criteria and analysis techniques.

The development of joints for composite material structural members has been studied extensively by a number of investigators. Most of the previous efforts have been confined to either bonded or mechanical joints. However, both of these joint types possess inherent limitations.

This paper describes a shim joint concept which considerably reduces these limitations and improves the efficiency of the joints. The basic geometry of the shim joint is presented in Figure 6.2.1-1. The shim layers are of uniform thickness and constant length in the longitudinal direction. The composite tube end is separated into several layers and bonded to the shim layers by an adhesive. A single circumferential row of conventional shear pins is used to transfer loads from the composite tube, through the shim layers, to the mating part.

Most of the information presented thereafter refers to fiber glass composite tubes subjected to tensile load. However, this shall not be interpreted as the limitation of the shim joint concept.

The composite material used to establish design data consisted of AF-994 glass filament and Shell Chemical Company's 58-68R resin system. The shim material was AM-355 steel (ultimate tensile strength 260 ksi).

6.2.1.2 ANALYSIS OF ATTACHMENT AREA

Analysis of the configuration in Figure 6.2.1-1 resulted in an extensive list of potential design parameters. Most of the geometric variables are defined in Figure 6.2.1-1. A complete listing of geometry variables is presented below.

a = distance from pin row centerline to tube end

$D_o(D_i)$ = outside (inside) tube diameter

$D_{oj}(D_{ij})$ = outside (inside) tube diameter in attachment area

USE FOR TYPEWRITTEN MATERIAL ONLY
U3 4607 1454 REV. 8-65

USE FOR DRAWING AND HANDPRINTING — NO TYPEWRITTEN MATERIAL

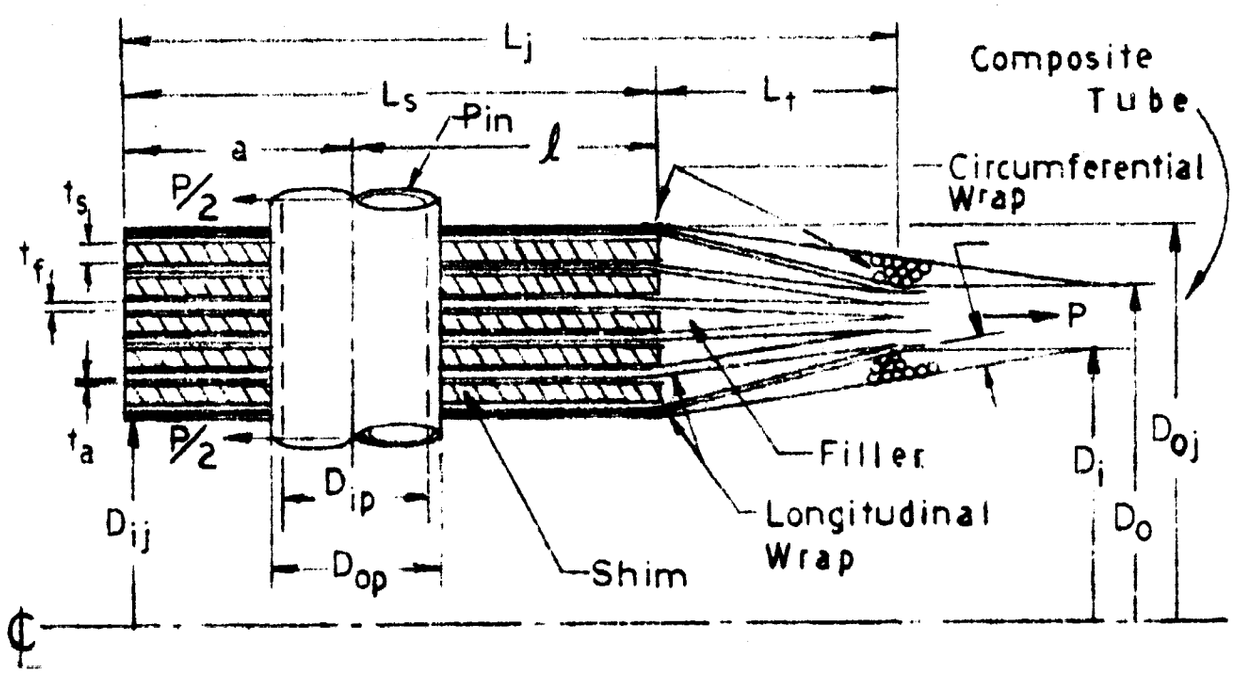

TUBULAR SHIM JOINT DESIGN VARIABLES

Figure 6.2.1-1

$D_{op}(D_{ip})$ = outside (inside) pin diameter

ℓ = distance from pin row centerline to back edge of shims

j = total length of reinforced attachment area ($L_s + L_t$)

L_r = length of reinforcing ring

L_s = longitudinal length of metallic shim layer ($\ell + a$)

L_t = wall thickness transition zone

N_c = number of filament layers in tube wall that do not extend into the attachment area

N_p = number of pins along the tube circumference

N_s = number of metallic shim layers

t_a = thickness of the adhesive layer joining the metallic shim to the composite material

t_c = thickness of composite layers which do not extend between shims

t_f = thickness of composite layers between shims

t_r = maximum thickness of the transition length circumferential reinforcing rings

t_s = thickness of metallic shim layers

W = circumferential distance between pin centerlines

And the material weight densities are denoted in the design procedure as follows:

ω = density of the composite material

ω_a = density of the adhesive material

ω_f = density of the filler material

ω_p = density of the pin material

ω_s = density of the metallic shim material

Mechanical fasteners in shim reinforced composite materials produce much the same failure mode as in metals. The following analysis considers those potential failure modes resulting from axial tension loads on the joint. Net

USE FOR TYPEWRITTEN MATERIAL ONLY

U3 4802 1434 REV. 8-65

area tensile failure, pin hole bearing failure, hoop tension failure, shear bearing tear-out failure, and pin shear failure can all be produced by variation of design parameters. Failure can also occur due to excessive shear in the bend joint between the shim and the composite material, or by delamination of the fibrous layers in the tube wall thickness transition length.

6.2.1.2.1 NET AREA TENSION

Joint failure may occur in tension along the pin row centerline if the net tension area becomes sufficiently small. The ultimate strength of the net tension area depends on the ductility of the metallic shim material when a low elastic modulus composite is used. The composite material in the net tension area can support high stress if the shim can be strained sufficiently. For this reason, the combined steel and composite areas were utilized in calculating the net tension area stress (A_t).

$$A_t = (W - D_{op}) \left(\frac{D_o - D_i}{2} - .006N_c + N_s t_s \right) \qquad (1)$$

where $W = \pi D_{oj}/N_p$. The ultimate tension load is given by:

$$P_{ult} = N_p K_{tu} A_t F_{tu} \qquad (2)$$

where K_{tu} is the ultimate tensile efficiency factor and F_{tu} is the ultimate tensile strength of the metal.

The allowable tensile stress is a function of the D_{op}/W ratio as in lug strength study. Flat plate tests were conducted to determine tensile allowables and results are presented in Paragraph 6.2.1.3 of this paper

6.2.1.2.2 PIN HOLE BEARING

Test results have indicated that bearing failure of shim reinforced composites normally occurs as a result of shim buckling. Buckling strength is a function of individual shim thickness, t_s, and the unsupported metal span length,

USE FOR TYPEWRITTEN MATERIAL ONLY
U S 4802 1434 REV. 8-65

D_{op}. The bearing allowables are presented in Paragraph 6.2.1.3 of this paper as a function of the ratio D_{op}/t_s. The allowable pin bearing area and the ultimate tension load are:

$$A_{br} = N_s t_s D_{op} \quad (3)$$

$$P_{ult} = N_p K_{br} A_{br} F_{tu} \quad (4)$$

where K_{br} is the bearing efficiency factor.

Since the failure mode is actually one of stability, the degree of restraint due to clamping must also be considered in establishing allowables for this failure mode. A joint which is tightly clamped by a threaded nut on the pin will produce much higher bearing stresses than an identical joint which is not clamped or restrained. Clamping of the flat plate tests were adjusted to duplicate that expected in the composite tube attachment.

6.2.1.2.3 HOOP TENSION

Hoop tension can occur when the pin row is placed too close to the tube end. For unidirectional composite plies, the tensile strength of the glass epoxy system is quite low in the transverse directions, therefore, the composite material was not considered to be effective in transmitting hoop stress during the establishment of allowables. Further testing would be required to establish allowables for attachments which incorporate plies oriented at an angle to the member axis. The allowable is defined in terms of the shim material ultimate tensile strength and is a function of the a/D_{op} ratio. The hoop tension area is given by the following expression:

$$A_{ht} = N_s t_s \left(a - \frac{D_{op}}{2} \right) \quad (5)$$

The ultimate load for the joint is

$$P_{ult} = N_p K_{ht} A_{ht} F_{tu} \quad (6)$$

USE FOR TYPEWRITTEN MATERIAL ONLY
U3 6808 1484 REV. 8-65

USE FOR DRAWING AND HANDPRINTING — NO TYPEWRITTEN MATERIAL

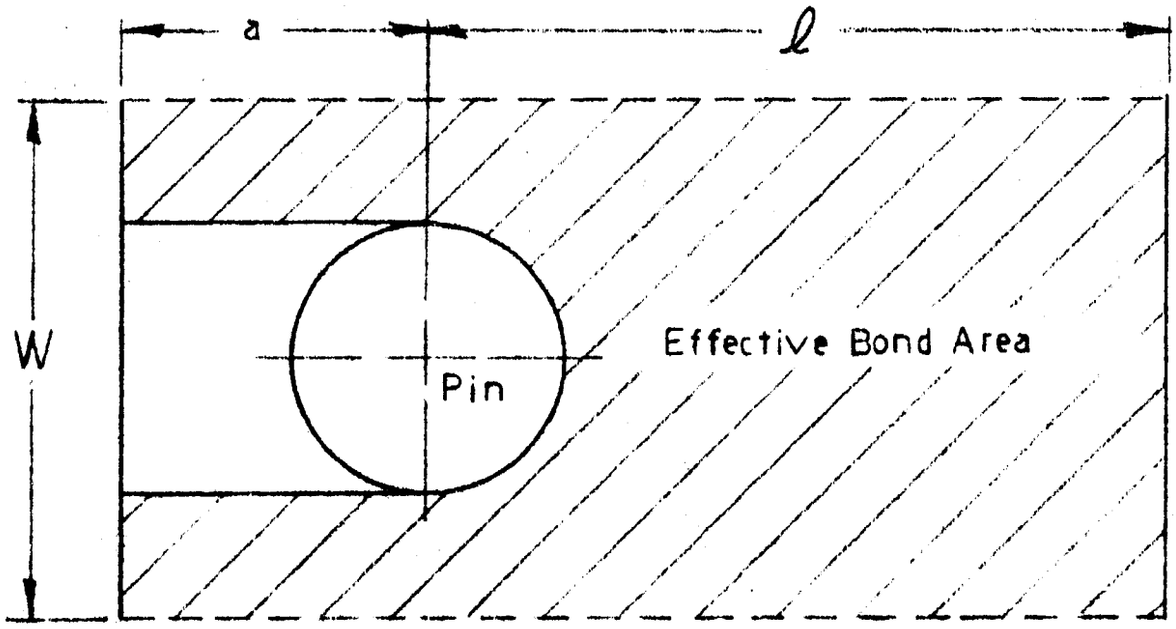

EFFECTIVE BOND AREA

Figure 6.2.1-2

where K_{ht} is the hoop tension efficiency factor, further explained in Paragraph 6.2.1.3.

6.2.1.2.4 SHEAR BEARING

Past experience with lug design would indicate that shear bearing failure could also occur if the pin row is placed too close to the end. There were no clearly defined occurrences of shear bearing failure during the flat plate test series of this study. It has been suggested that the tubular members may be more susceptible to shear bearing failures since the tubular geometry possesses more lateral constraints than the flat plate specimens. Only tubular test data can ascertain this fact.

6.2.1.2.5 BOND

To design a bonded shim joint for ultimate loading, it was necessary to use average shear strength allowables from flat plate tests. The shim area which was considered to be effective in bond is shown in Figure 6.2.1-2 to be a function of both a and ℓ. An effective bond length ℓ_e, was defined by dividing the shaded bond area by the width, W.

$$\ell_e = \frac{W(\ell + a) - N_p\left(a D_{op} + \frac{\pi}{8} D_{op}^2\right)}{W} \qquad (7)$$

The ultimate load for a shim joint is given by

$$P_{ult} = 2N_s A_s F_s \qquad (8)$$

where $A_s = \ell_e W$, and F_s is the allowable shear stress, defined in terms of the effective bond length ℓ_e.

6.2.1.2.6 WALL THICKNESS TRANSITION ZONE

From a weight standpoint, it is desirable to make the transition length as short as possible. As the transition length becomes shorter, however, the radial force component which tends to separate the fibrous layers (delaminate) at the base of the transition length becomes greater. These radial forces create

USE FOR TYPEWRITTEN MATERIAL ONLY
US 4908 1434 REV. 8-65

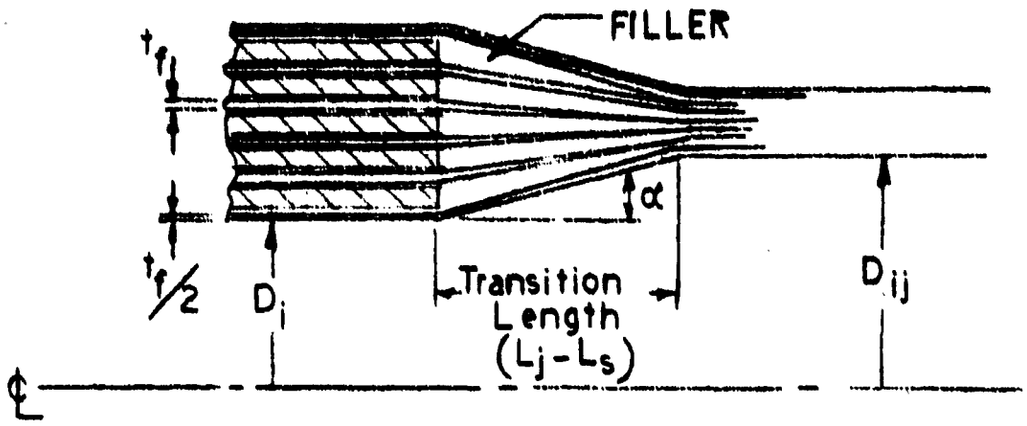

TRANSITION ZONE

Figure 6.2.1-3

USE FOR DRAWING AND HANDPRINTING — NO TYPEWRITTEN MATERIAL

tensile strain concentrations at the initial separation point of adjacent layers which must not exceed the ultimate tensile strain for the resin in the composite. The tensile strain at the separation point can be controlled by designing circ wrap reinforcement rings at both the inside and outside diameters to restrict radial movement. The transition zone was analyzed by using a finite element model of beams and springs. The thickness of the required reinforcing ring is

$$t_r = \frac{D_o^2 \quad P_i - (P_i)_{ult}}{4Ef\ y_a} \qquad (9)$$

where P_i is the radial force on the exterior layer, $(P_i)_{ult}$ is the allowable radial force on the exterior layer and y_a the allowable radial displacement of the exterior layer. Both $(P_i)_{ult}$ and y_a values may be established through analytical-experimental studies (Reference b, pp. 88-99).

6.2.1.2.7 PIN SHEAR

The pins are loaded in double shear and the design requires simply that the cross-sectional area be large enough to ensure that the shear stress does not exceed the ultimate shear strength of the material. If hollow pins are used, the ratio D_{ip}/D_{op} must be low enough to ensure that the pins will not crush or buckle. The ultimate load for the pinned joint as governed by pin shear is given by:

$$P_{ult} = 2N_p A_p F_{su} \qquad (10)$$

where A_p is the pin area, and F_{su} the ultimate shearing strength of the pin material.

6.2.1.3 FLAT PLATE TESTS

The flat plate test specimen (Figure 6.2.1-4) was developed to enable inexpensive determination of ultimate strength design allowables for the various failure modes in a shim joint. The presence of free edges on the sides of the flat plate configuration prevents exact simulation of the tubular joint,

USE FOR TYPEWRITTEN MATERIAL ONLY
US 4802 1434 REV. 8-65

USE FOR DRAWING AND HANDPRINTING — NO TYPEWRITTEN MATERIAL

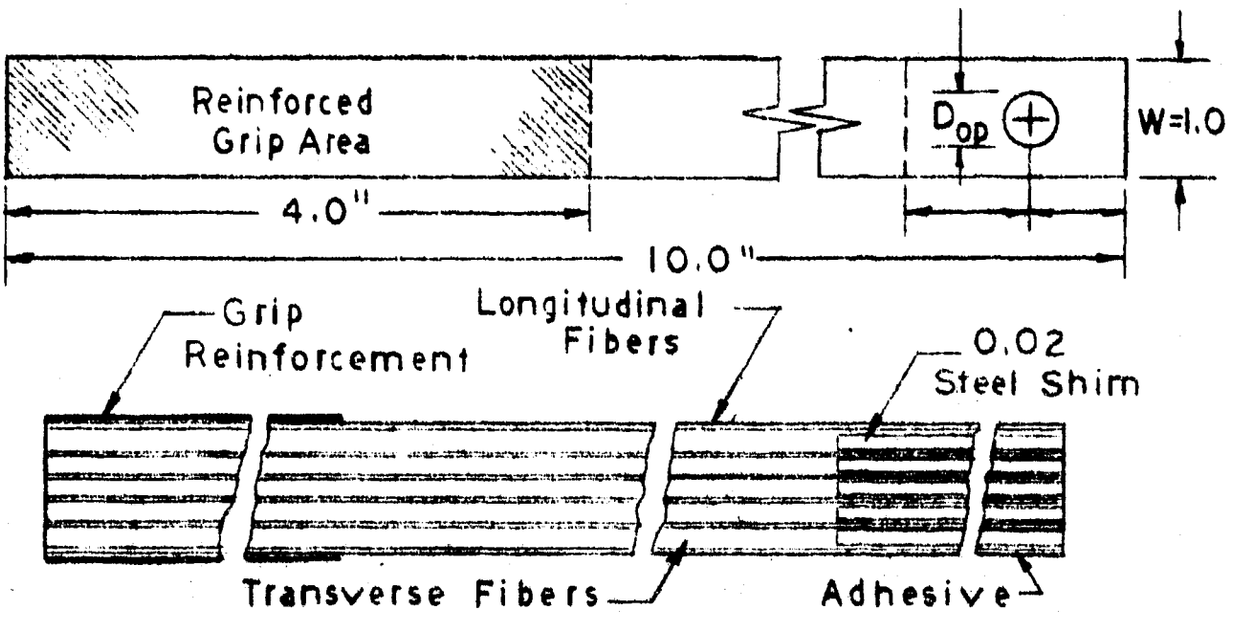

TYPICAL FLAT PLATE SPECIMEN

Figure 6.2.1-4

but it is felt to be adequate for most failure modes.

The flat plate specimen used in this study is best described by Figure 6.2.1-4. Five 0.02 inch steel shim layers were used in each of the flat plate speciments, but the other materials were included in varying quantities to produce failure modes which were of interest. The composite material was composed of 65 percent glass, by volume, and 35 percent resin. The W dimension was fixed at 1.0 inch. Also tests conducted during this study have included only longitudinal fibers between the shims. Further testing will be required to determine design allowables for shim joints in laminates having fibers oriented at an angle to the loading direction.

The specimens were loaded by a pin through the shim joint and by a friction grip on the opposite end. The shim pack was clamped lightly during the test to simulate the clamping action expected from a metal fitting mating with the reinforced tube end. The specimens were loaded to rupture to obtain ultimate strength design allowables.

6.2.1.3.1 NET AREA TENSION

The net area tension data is shown in Figure 6.2.1-5. The calculated stress values were divided by the ultimate tensile strength of the shim material to form the net tension efficiency factor, K_{tu}. A mean allowable curve is shown superimposed on the test data. The mean allowable is defined in terms of D_{op}/W by the expression:

$$K_{tu} = \frac{79.33}{143.75 - 100\ D_{op}/W} \qquad (11)$$

which was used in the net tension area failure envelope in the design.

Data points denoted as "lower bound" values arise from tests in which failure occurred either in a different mode, or in a combination of modes which included the one of interest.

USE FOR TYPEWRITTEN MATERIAL ONLY
U3 4808 1434 REV. 8-69

USE FOR DRAWING AND HANDPRINTING — NO TYPEWRITTEN MATERIAL

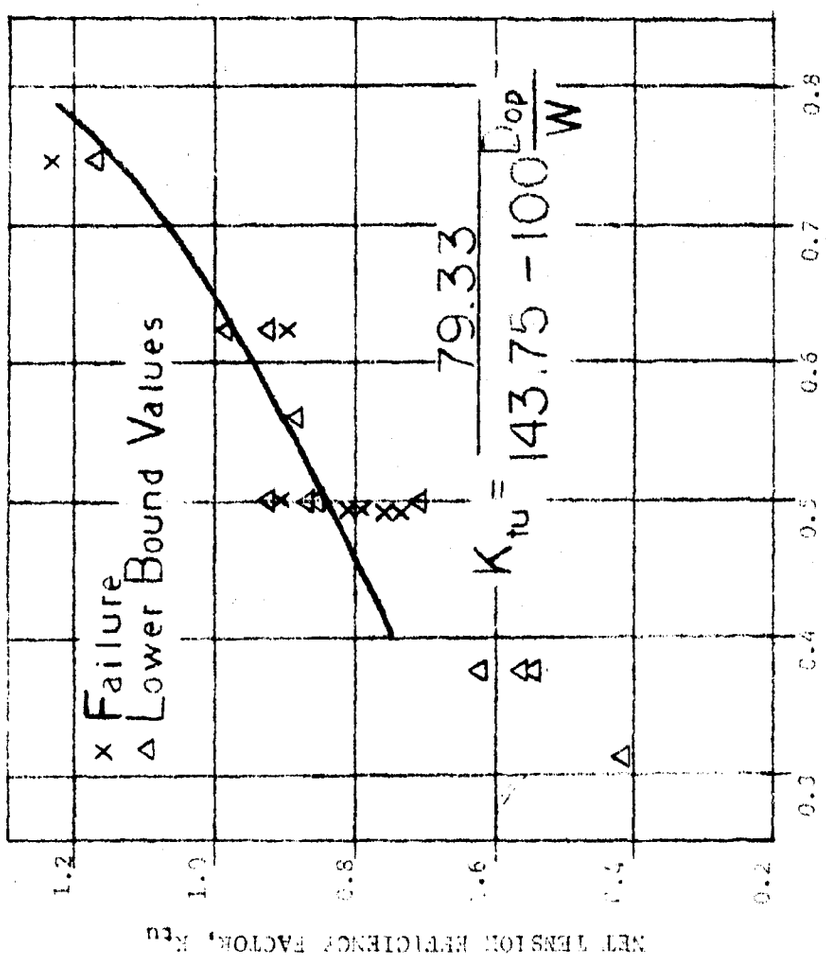

NET TENSION TEST RESULTS vs. D_{op}/W

Figure 6.2.1-5

USE FOR DRAWING AND HANDPRINTING — NO TYPEWRITTEN MATERIAL

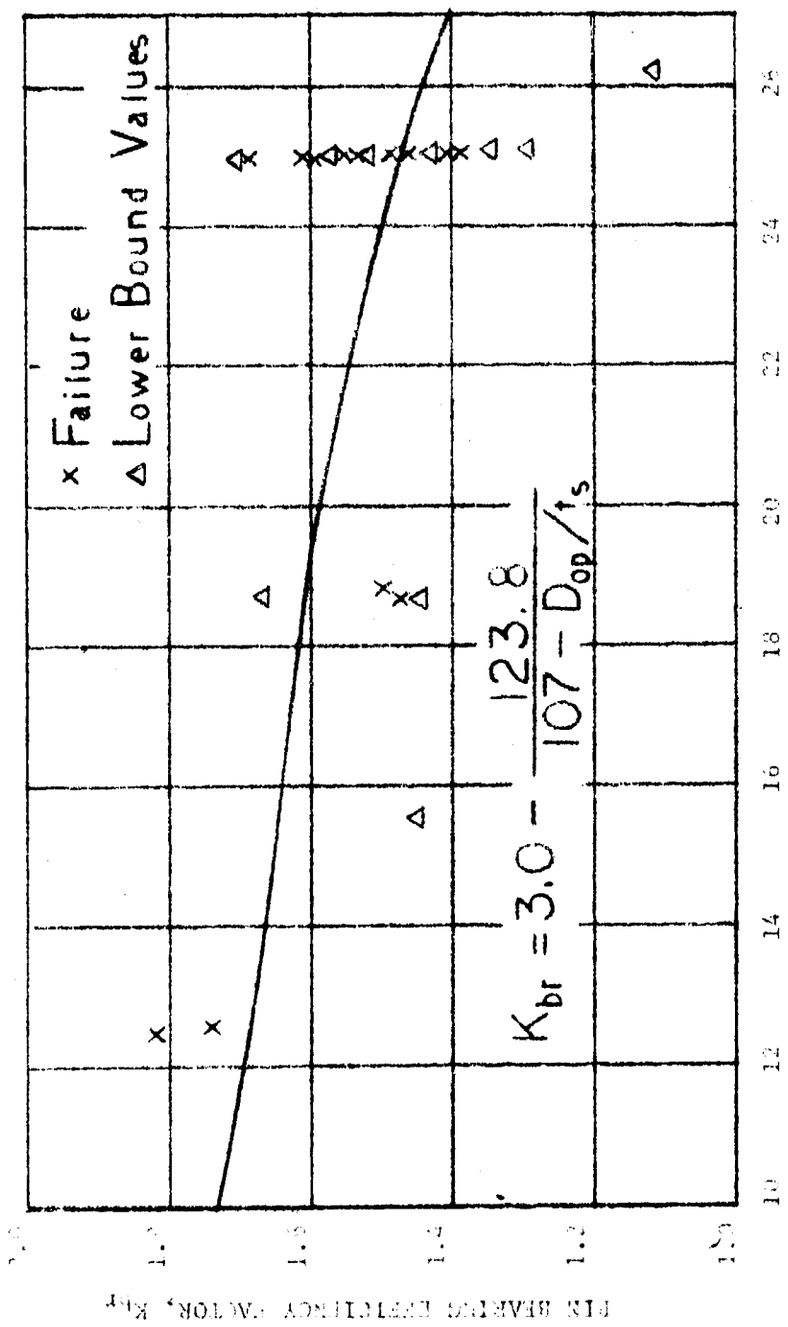

PIN BEARING TEST RESULTS vs. D_{op}/t_s

Figure 6.2.1-6:

6.2.1.3.2 PIN BEARING

Figure 6.2.1-6 shows the flat plate pin bearing strength data plotted versus the D_{op}/t_s ratio. The bearing ultimate stress values have been divided by the ultimate tensile strength of the shim material to form the pin bearing efficiency factor, K_{br}. The curve was derived emperically and is defined by

$$K_{br} = 3.0 - \frac{123.8}{107 - D_{op}/t_s} \qquad (12)$$

Equation 12 was used as the pin bearing failure envelope in the optimum design procedure.

Pin bearing failure is of special interest because it is more ductile than other failure modes. When structural members are fabricated from brittle materials such as fiber glass, it may be desirable to design the assembly such that initial failure occurs in the attachment by pin bearing to avoid catastrophic failure of the assembly.

6.2.1.3.3 HOOP TENSION

The hoop tension test results are plotted in Figure 6.2.1-7 as a function of the a/D_{op} ratio. Again a mean allowable curve has been derived to fit the test data. The mean allowable curve is obtained by

$$K_{ht} = \frac{3.173}{a/D_{op} + 0.65} \qquad (13)$$

which was used as the hoop tension failure envelope in the design procedure.

6.2.1.3.4 BOND

The effective length of bond for flat plates, ℓ_e, was defined in terms of both "ℓ" and "a" by

$$\ell_e = (\ell + a) - a\,D_{op} - \frac{\pi}{8} D_{op}^2 \qquad (14)$$

Figure 6.2.1-8 shows the test data plotted versus the effective

USE FOR TYPEWRITTEN MATERIAL ONLY
U3 8802 1434 REV. 8-65

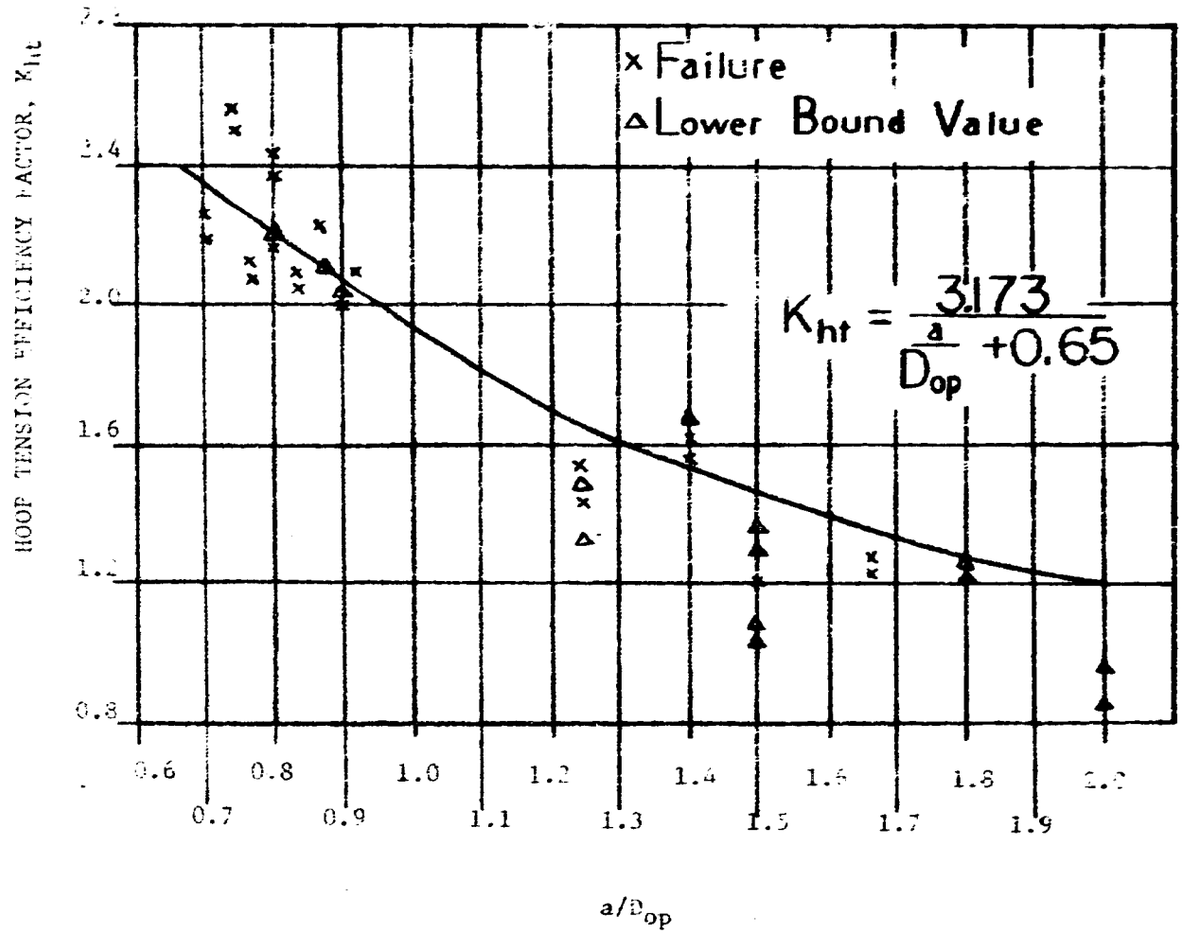

HOOP TENSION TEST RESULTS vs. a/D_{op}

Figure 6.2.1-7:

USE FOR DRAWING AND HANDPRINTING — NO TYPEWRITTEN MATERIAL

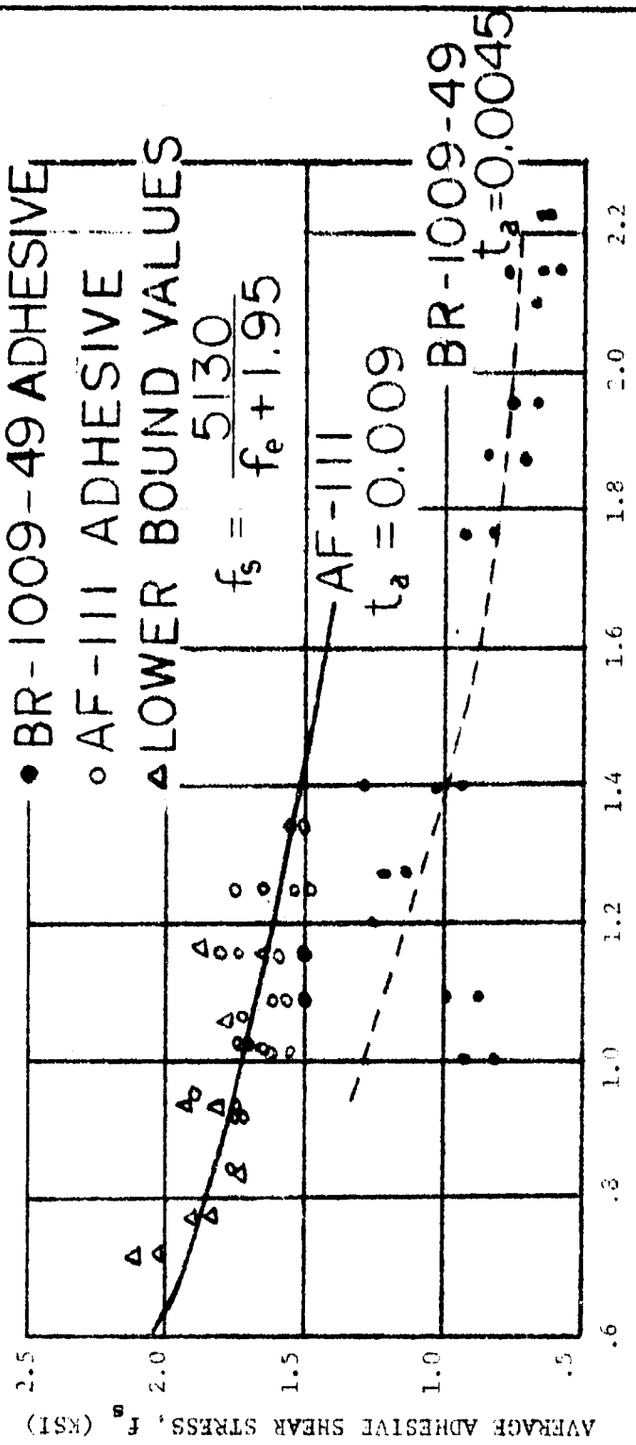

AVERAGE ADHESIVE SHEAR STRENGTH VS.
EFFECTIVE JOINT LENGTH

Figure 6.2.1-8:

length. The solid line curve represents the bond strength of the AF-11 (3M Corporation) adhesive tape, and the dashed line curve shows the bond strength for the BR-1009-49 tack primer (American Cyanimid Corporation). An algebraic equation was derived to fit the AF-111 shear strength. The curve is defined by

$$f_s = \frac{5130}{\ell_e + 1.95} \qquad (15)$$

where f_s is the average adhesive shear stress.

The AF-111 adhesive film produces thicker adhesive layer than the BR-1009-49 tack primer. It can be shown (Reference b, pp. 10-12, pp. 75-87) that thicker adhesive layer does reduce the shear stress concentration factor.

6.2.1.3.5 TRANSITION ZONE

Two flat plate speciments were fabricated without the excess transverse fiber glass layer to study the delamination failure mode in the thickness transition zone. The specimens did fail by delamination as expected, and the data were used to establish allowable stress level in the circumferential, reinforcing ring, design p[illegible]re.

6.2.1.4 OPTIMUM DESIGN

A feasible design is one that behaves satisfactorily under the specified conditions. In general, it is possible to find more than one feasible shim joint design for a given composite tube. If one of the design features is taken as the design objective, it is possible to find a feasible design which is most favorable as judged by the design objective. In the present study, weight was chosen as the design objective.

6.2.1.4.1 DESIGN CONSTRAINTS

A shim joint is considered feasible if it satisfies the following design constraints:

1. Net section tension:

USE FOR TYPEWRITTEN MATERIAL ONLY

U3 4802 1494 REV. 8-65

$$\left[\frac{\pi}{2}(D_{oj} + D_{ij}) - N_p D_{op}\right] \left[\frac{1}{2}(D_{oj} - D_{ij}) - N_c t_c + N_s t_s\right]$$

$$\times K_{tu} F_{tu} \geq P_{ult} \qquad (16)$$

2. Bearing

$$N_p D_{op} N_s t_s K_{br} F_{tu} \geq P_{ult} \qquad (17)$$

3. Hoop tension

$$N_p \left(a - \frac{1}{2} D_{op}\right) N_s t_s K_{ht} F_{tu} \geq P_{ult} \qquad (18)$$

4. Bond

$$\pi N_s (D_{oj} + D_{ij}) \ell_e F_s \geq P_{ult} \qquad (19)$$

5. Circ reinforcing ring

$$t_r \geq \frac{D_o^2 \left[P_i - (P_i)_{ult}\right]}{4 E_f y_a} \qquad (20)$$

6. Pin

$$\frac{\pi}{2} N_p D_{op}^2 \left[1 - \left(\frac{D_{ip}}{D_{op}}\right)^2\right] F_{su} \geq P_{ult} \qquad (21)$$

6.2.1.4.2 OBJECTIVE FUNCTION

To write the objective function, the weight of each joint component is expressed in terms of the design variables:

1. Fiber glass composite:

$$W_{fg} = \left[\frac{\pi}{4}(D_o^2 - D_i^2) L_j - \frac{\pi}{4} D_{op}^2 N_p \left(\frac{D_o - D_i}{2} - N_c t_c\right) - N_c t_c \pi \left(\frac{D_o + D_i}{2}\right) L_j\right] \omega \qquad (22)$$

USE FOR TYPEWRITTEN MATERIAL ONLY

U3 4802 1434 REV. 8-65

2. Shim

$$W_s = N_s t_s \left[\pi \left(\frac{D_{oj} + D_{ij}}{2} \right) L_s - \frac{\pi}{4} D_{op}^2 N_p \right] \omega_s \qquad (23)$$

3. Circ wrap ring:

$$W_r = \left[2\pi (D_o + D_i)\, t_r^{\,2} \tan \frac{\alpha}{2} \right] \omega \qquad (24)$$

4. Filler

$$W_f = \frac{\pi}{4} (D_{oj} + D_{ij})\, N_s L_t (t_s + 2\, t_a) \omega_f \qquad (25)$$

5. Pin

$$W_p = \frac{\pi}{4} D_{op}^2 \left[1 - \left(\frac{D_{op}}{D_{ip}} \right)^2 \right] N_p \left[\left(\frac{D_o + D_i}{2} - N_c t_c \right) + N_s (t_s + 2t_a) + \ell_p \right] \omega_p \qquad (26)$$

where ℓ_p is the pin length required outside shim pack to connect the mating fixture.

As a structural member, the total length of the composite tube is fixed. An increase in the joint length naturally causes a decrease in the uniform section portion of the composite tube. Consequently, the increase of weight due to longer joint length is partially compensated by a shorter basic tube section. Since the joint length is a design parameter, the total joint weight does not reflect the additonal weight superimposed to the tube.

For this reason the shim joint objective function is defined as:

$$W_o = W_{fg} + W_s + W_r + W_f + W_p - \frac{\pi}{4} (D_o^{\,2} - D_i^{\,2})\, L_j \omega_{fg} \qquad (27)$$

which is the weight added to the structural member by the attachment.

USE FOR TYPEWRITTEN MATERIAL ONLY

U3 4802 1494 REV. 8-63

6.2.14.3 OPTIMUM DESIGN

Now the design problem may be stated as: to find the minimum of equation 27 subjected to the condition of equations 16 through 21. There are a number of directly applicable mathematical methods for the solution of this type problem. The method selected in this study was the steepest descent. The net attachment weight was taken as the objective function and the conditions equations 16 to 21 were created as constraints. Then the objective function was minimized under the constraints.

The method used is a descent routine. Starting with an initial solution, steps are taken towards new points at which the value of the objective function is improved. The iteration process continues until a minimum is reached. (Reference b, p. 95)

The procedure described above has been programmed in Fortran IV to form a basic optimization routine. The routine has been successfully used for numerous design problems. When applied to the design of shim joints, the input consists of:

1. Number of design parameter, number of constraints.
2. Limit of interative cycles.
3. Initial step length.
4. Tolerance range for each constraint.
5. Applied load.
6. Tube geometry.
7. Mechanical properties of materials.
8. Design constraints.
9. Initial design parameters.
10. Optimal information.

If allowable stress is expressed as a function of design parameters, it is convenient to incorporate allowable stress expressions in the program. The program output consists of:

1. Design parameter.

USE FOR TYPEWRITTEN MATERIAL ONLY

US 4802 1434 REV. 8-65

2. Information concerning any violation of constraints.

3. Direction of movement.

4. Weight of each shim joint component.

5. Value of the objective function.

The program was executed on an IBM 360/44 computer. Artificial constraints may be added to improve convergence. For example, the minimum practical values of a, t_s and t_r may be treated as artificial constraints. For six design variables and eleven constraints (including artificial constraints for convenience) the average running time was five to six minutes. It was observed that usually after twenty-five iterations the variation of objective function was in the order of one thousandth of a pound. It was also observed that different sets of reasonable initial conditions all lead to practically identical objective function and design parameters. For all practical purpose the objective function obtained in twenty-five iterations may be taken as the minimum and the corresponding design parameters the optimum design.

6.2.1.4.4 EXAMPLE

The optimization procedure was used to design the tubular joint for the final structural test of this program. The design allowable expressions obtained from the flat plate data were used in the constraint equations 16 through 21. The design was performed with the following parameters fixed:

D_o = 3.0 In. D_i = 2.928 In.

D_{oj} = 3.095 In. D_{ij} = 2.833 In.

D_{op}/D_{ip} = 0.8

F_{tu} = 260 ksi F_{su} = 110 ksi

t_a = 0.009 In. t_c = 0.006 In.

ω = 0.074 Lb./In.^{3}

ω_s = 0.283 Lb./In.^{3} ω_f = 0.040 Lb./In.^{3}

USE FOR TYPEWRITTEN MATERIAL ONLY
US 4F02 1434 REV. 8-65

NO. OF PINS	Dop in.	ℓ in.	a in.	It in.	t_s in.	tr. in.	OBJECTIVE FUNCTION LB.	TOTAL JOINT WEIGHT LB.
8	.549	.685	.686	.461	.021	.014	.429	.518
9	.518	.680	.681	.447	.019	.009	.389	.477
10	.491	.702	.667	.424	.017	.012	.369	.457
11	.468	.722	.661	.409	.016	.010	.349	.436
12	.448	.740	.663	.414	.017	.015	.373	.481
13	.431	.753	.664	.422	.019	.023	.414	.502

RESULTS OF PIN NUMBER
VARIATION STUDY

Table 1:

$N_s = 5.0$ $N_c = 2.0$

$P_{ult} = 150$ k

With exception of N_p (number of pins), the remaining design parameters were allowed to vary in the optimization routine.

The routine does not handle discrete variables and it was impractical to treat N_p as a continuous variable. To determine the optimum number of pins, the number of N_p was varied in consecutive runs having otherwise identical input. The resulting joint designs are shown in Table I. The table includes both, a) the weight added to the basic tube by the reinforcement and pins(objective function) and b) the total weight of the joint section. The pins were considered to be hollow and made from 180 ksi ultimate tensile strength steel.

The objective function is plotted as a function of N_p in Figure 6.2.1-9. As the plot indicates, the eleven pin configuration is clearly the optimum one for the specified problem.

6.2.1.4.5 EFFICIENCY OF THE SHIM JOINT CONCEPT

A comparison can be made by studying a composite tube having shim joints with tubes of other materials designed to meet the same loading requirement. In Figure 6.2.1-10 the weights of constant strength tubes have been plotted versus tube length. The metal tubes are assumed to have identical strength in tension and compression. Two curves are shown to reflect the different tensile and compressive strengths of $5,0^{\circ}:1,90^{\circ}$ fiber glass. Thin wall buckling and column buckling are not considered. The fiber glass tube weights include 0.7 pound to reflect the weight added to both ends of the tube by the minimum weight eleven pin attachment of the previous section.

Examination of Figure 6.2.1-10 reveals that for design governed by tensile strength, fiber glass tubes are more efficient than aluminum for tube length of 5.0 inches or larger and lighter than steel or titanium for tube lengths exceeding 7.5 inches. If compressive strength governs the tube design, fiber

USE FOR TYPEWRITTEN MATERIAL ONLY
U3 4802 1494 REV. 8-65

USE FOR DRAWING AND HANDPRINTING — NO TYPEWRITTEN MATERIAL

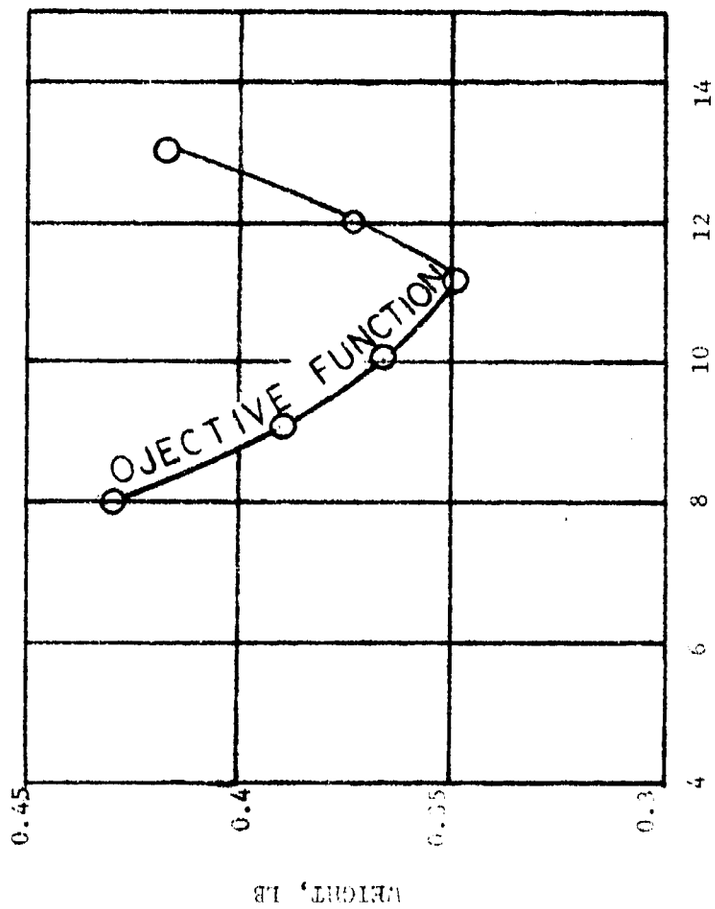

INCREASE IN WEIGHT OF STRUCTURAL MEMBER DUE TO JOINT VS. NUMBER OF PINS USED IN JOINT

Figure 6.2.1-9:

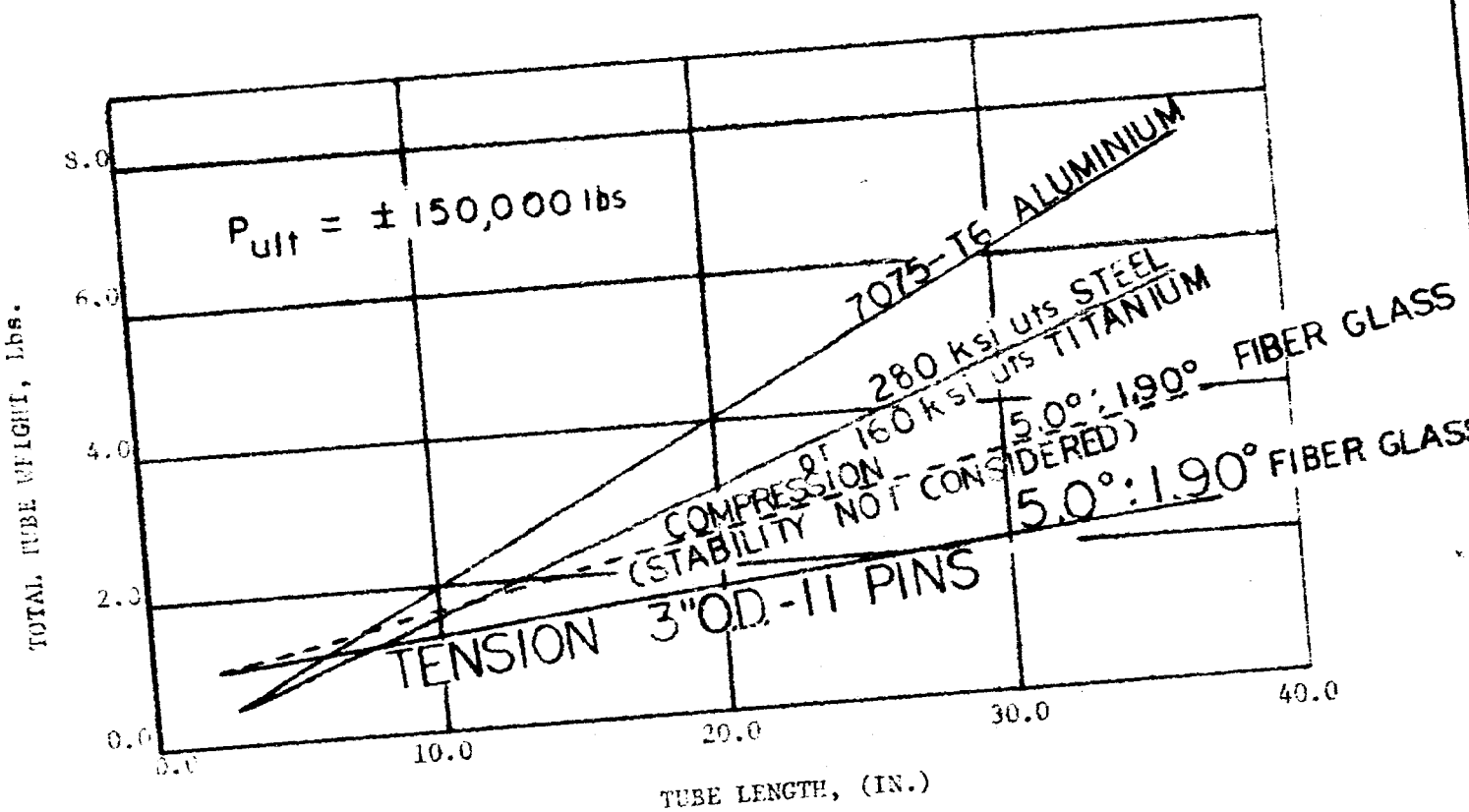

WEIGHT COMPARISON OF CONSTANT STRENGTH TUBES VS. TUBE LENGTH

Figure 6.2.1-10:

glass is more efficient than aluminum for lengths greater than 6.5 inches, and lighter than steel or titanium tube lengths exceeding 12.0 inches.

6.2.1.5 MATERIALS AND FABRICATION

Materials

The filament composite materials employed in this study consisted of AF-994 glass filaments and Shell Chemical Company's 58-68R resin system.

The metal shim was made of AM-335 steel coil, eight inches wide, 0.02 inch thick, and of continuous length. The shim cleaning procedure employed was originally developed and reported in Reference e.

The bond between the corrosion resistant steel shims and the filament composite material was provided by a structural adhesive. Two types of adhesives were evaluated. The first was BR-1009-49 tack primer as supplied by the American Cyanimid Corporation, and the second was AF-111 structural adhesive fiber furnished by the 3M Corporation. BR-1009-49 tack primer was utilized during the early phase of the program. A primer coating of uniform thickness of approximately 0.005 inch was obtained, and was oven cured for 60 minutes at 315°F. AF-111 structural film was utilized during the later phase of the program. The adhesive film was applied to the steel shim and stored at 40°F until ready for use.

Holes were drilled through the fiber-resin-shim-composite to permit insertion of shear pins. Carbide-tipped or full carbide drills were used. Holes larger than 0.250 inch diameter can be drilled in successive steps of approximately 0.375 inch diameter increase per step.

6.2.1.5.1 FLAT PLATE SPECIMENS

The flat plate filament composite specimens utilized in this program were specially wound on a winding machine. The test specimens were wound over twelve-inch by two-inch aluminum mandrels.

USE FOR TYPEWRITTEN MATERIAL ONLY

U3 4802 1434 REV. 8-65

Guide blocks were provided on one end of the mandrels to facilitate locating the metal shims as they were wound into the ends of the specimens. Two specimens were wound simultaneously by utilizing both sides of the mandrel. The wrapped mandrels were then cured for four hours at 350°F. The specimens were removed from the mandrel by cutting the glass composite along the edges with a high speed cutting disk. The sides and ends were trimmed with a hand saw and flat plate disk sander.

6.2.1.5.2 TUBES

Open end cylinders were fabricated two at a time by winding a double length cylinder and then cutting it into two cylinders. The cylinders were wound over mandrels machined from salt block which was later removed by dissolving in hot water. Thin corrosion resistant steel shims, in the form of narrow circumferential bands, were wound into the cylinders on each side of the planned cut which would separate the two cylinders. Subsequent to removal of the salt mandrel, a circumferential row of holes was drilled through the wall of each cylinder in the shim area for later insertion of shear pins.

6.2.1.6 STRUCTURAL TEST

6.2.1.6.1 TEST FIXTURES

Ultimate strength testing of the final tubular joint design required the fabrication of two separate test fixtures. One fixture is a clevis-type which mates with the reinforced attachment area of the tube to form the pin joint. The fixture was fabricated in two pieces to avoid the expensive machining which would be required by a monolithic assembly. The two pieces were held tightly together by a nut during drilling of the pin holes. The nut was used to insure that equal loads would be applied to the pins on the inside and outside diameter of the tube.

The second test fixture (Reference b, pp 97-100) held the opposite end of the tubular specimen which was reinforced only by four additional layers of filament material. The fixture employed a friction gripping technique. A schematic

USE FOR TYPEWRITTEN MATERIAL ONLY

USE FOR DRAWING AND HANDPRINTING — NO TYPEWRITTEN MATERIAL

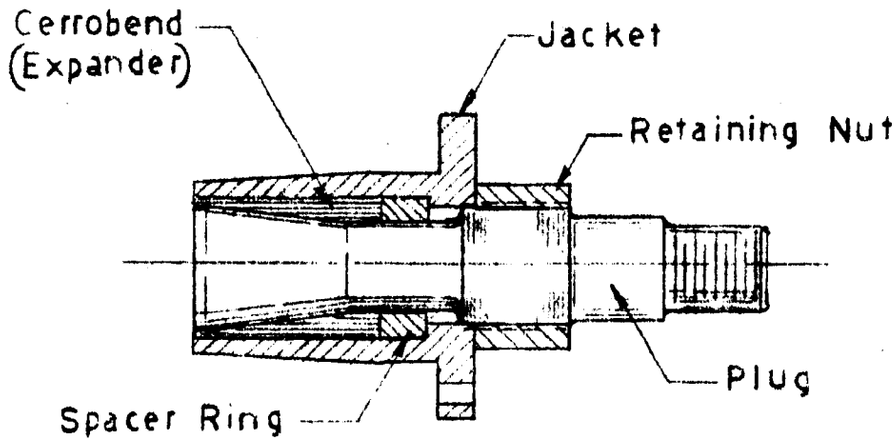

Figure 6.2.1-11: TENSION FIXTURE ASSEMBLY

of the fixture is shown in Figure 6.2.1-11.

6.2.1.6.2 TENSION TEST OF TUBULAR JOINT

A 3.0 inch outside diameter tube was fabricated with steel reinforced end to test the shim joint concept in a full scale structural member. The test specimen was designed to fail in the attachment area since the program is oriented to refinement of shim joint design technology. The basic tube was fabricated with a 5,0°: 1,90° wrap pattern to a wall thickness of 0.072 inches. The ultimate tensile load for the tube was found to be 150 kips (Reference c, pp 2-19). The specimen was loaded in an Olsen Machine to an ultimate tension load of 135.5 kips. Fracture occurred in the outer fiber glass layer at the edge of the outside shim. It is felt that both the test fixtures and the shim joint did perform well.

6.2.1.6.3 COMPRESSION TEST OF TUBULAR JOINT

The tension clevis fixture and the jacket of the friction grip fixture was used to conduct the compression test. A cerrobend plug was cast to reinforce the inside diameter of the nonreinforced tube end. The test specimen was identical to the tension specimen. The ultimate compressive load for the tube was found to be about 51.0 kips. The attachment area suffered no discernible damage.

6.2.1.7 CONCLUSIONS

The following conclusions may be made:

1. Design parameters can be optimized conveniently by the structural synthesis approach in determining the minimum weight configuration.

2. The shim joint concept can be successfully applied to composite members without prohibitive attachment weight penalties.

6.3 REFERENCES

a. Thiokol Chemical Corporation, Wasatch Division, "Design of a Filament Wound Segmented Motor Case." Technical Report No. AD406679, DDC, April 1-3, 1963, AIAA Launch and Space Vehicle Shell Structures Conference, Palm Springs, California.

USE FOR TYPEWRITTEN MATERIAL ONLY

U3 4802 1436 REV. 4-65

b. Cole, B.W., Wong, J.P., and Courtney, A.L., "Development of the Shim Joint Concept for Structural Members," Technical Report No. AFFDL-TR-67-116, August 1967, Air Froce Flight Dynamics Laboratory, Wright-Patterson Air Force Base, Ohio.

c. The Bendix Corporation, Products Aerospace Division, "Exploratory Application of Filament Wound Reinforced Plastic for Aircraft Landing Gear," Technical Report No. AFML-TR-66-309, December 1966, Air Force Materials Laboratory, Wright-Patterson Air Force Base, Ohio.

d. Thiokol Chemical Corporation, Wasatch Division, "Large Segmented Fiber Glass Reinforced Plastic Rocket Motor Cases," Report No. ASD-IR-8-150, Vol. I through VIII, Air Force Materials Laboratory, Wright-Patterson Air Force Base, Ohio.

e. Goland, M., and Reissner, E., "The Joint Stresses in Cemented Joints," Journal of Applied Mechanics, March 1944.

f. Melcon, M.A., and Hoblit, F.M., "Analysis of Lugs and Shear Pins," Product Engineering, May 1950 and June 1953

g. "Mechanics of Adhesive Bonded Lap-Type Joints: Survey and Review," Report No. ML-TDR-64-298, 1964, Forest Product Laboratory, U.S. Department of Agriculture, Madison, Wisconsin.

h. "Manufacturing Methods for Plastic Airframe Structures by Filament Winding," Technical Report No. IR-9-371(1), February 1967, Air Force Materials Laboratory, Wright-Patterson Air Force Base, Ohio.

i. Ridha, R.A., and Wright, R.N., "Minimum Cost Design of Frames," Hournal of Structural Division, Procedings ASCE, Vol. 93, ST4, August 1967, Paper No. 5394.

USE FOR TYPEWRITTEN MATERIAL ONLY

U S 4802 1434 REV. 6-65

7.0 JOINT CONSIDERATIONS FOR REDUCED SCALE MODEL VEHICLES

7.1 The use of scale model replicas for vehicle structural dynamics studies can provide the designer with valuable information on proposed designs early in their development cycle. By their use, structural modifications and payload changes can be evaluated without expensive full-scale construction and testing, particularly for the large, complex vehicle.

This Section discusses the 1/10 scale structural replica of the Apollo/Saturn V and is intended to provide designers with some insight to the compromises which can dictate deviations from true replica reproduction in the area of missile joints.

The decision to provide a scaled-down replica of the prototype joint, or to simulate it by its dynamic and dampening equivalent is dictated by the following considerations:

a. Present fabrication practices and limitations.

b. Access requirements unique to the model.

c. Assembly problems created by the size reduction.

d. Requirement for equivalent dynamic properties.

e. Fabrication properties of alternative alloys.

f. Size of scaled-down fastener components.

g. Economic alternatives of simulation vs scale duplication of the joint.

7.1.1 Structural Joints

7.1.2 The joint illustration in Figure 7.1.2-1 is typical of a design variation required to permit assembly of the structural components. This joint depicts the S-IV-B aft-bulkhead-common-bulkhead joint. In full scale (Figure 7.1.2-1a), the fabrication is by rivets and welds. The 1/10 scale model permits the final closure to be effected externally. The bulkhead structure near the joint was

USE FOR TYPEWRITTEN MATERIAL ONLY
U3 4807 1434 REV. 8-65

USE FOR DRAWING AND HANDPRINTING — NO TYPEWRITTEN MATERIAL

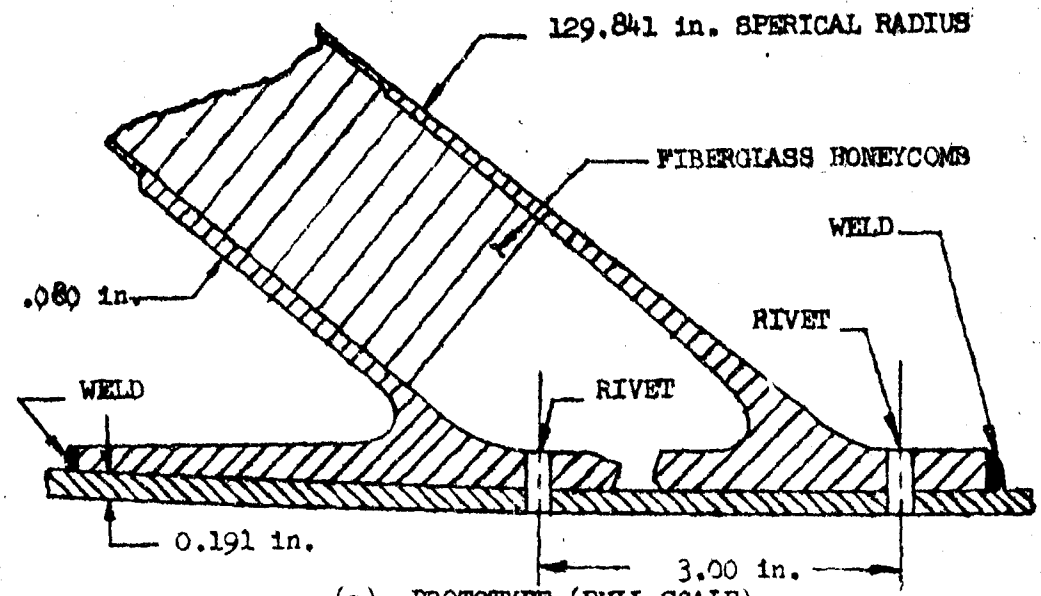

(a) PROTOTYPE (FULL SCALE)

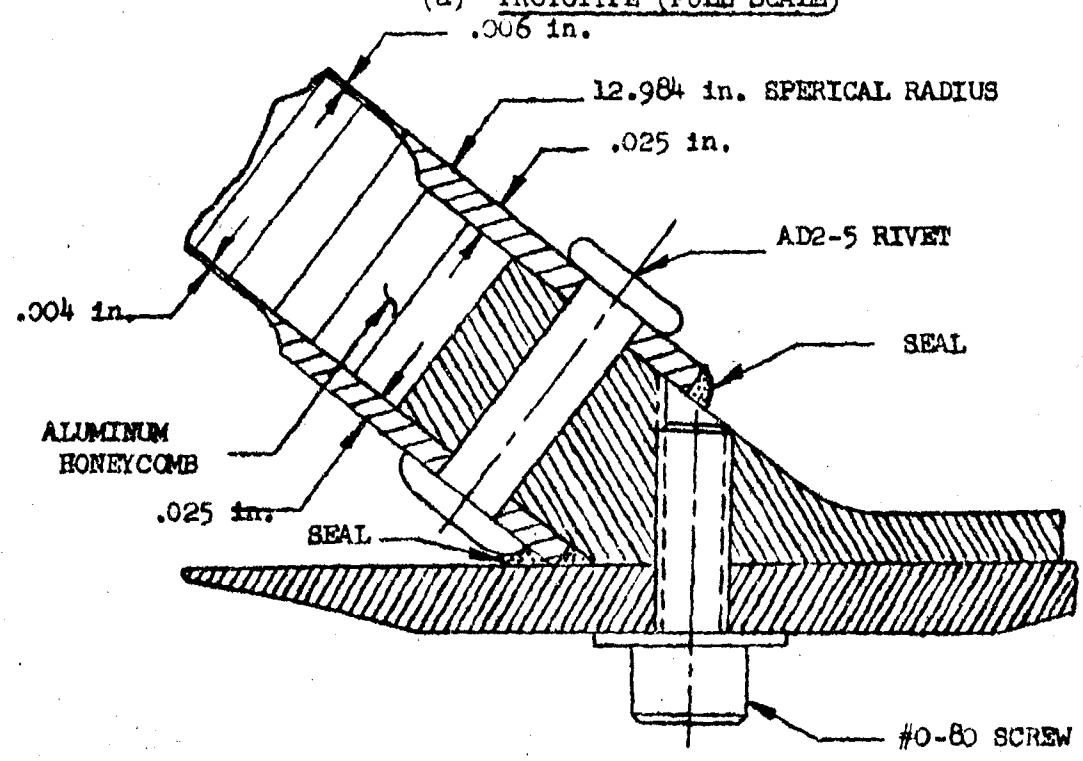

(b) 1/10 - SCALE MODEL

FULL SCALE PROTOTYPE & 1/10 SCALE MODEL S-IVB COMMON BULKHEAD

FIGURE 7.1.2-1

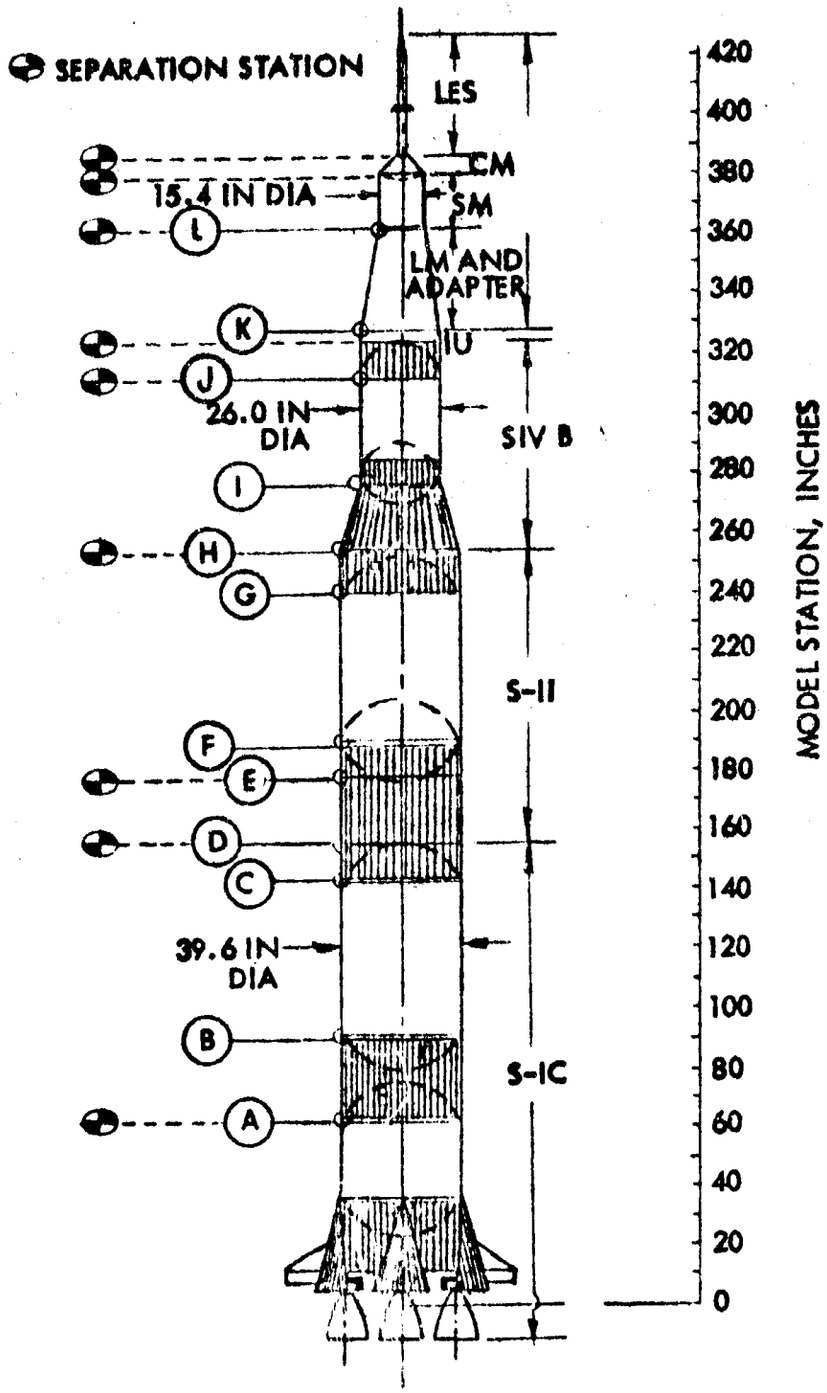

SCHEMATIC OF 1/10 - SCALE APOLLO/SATURN V MODEL

FIGURE 7.1.3-1

USE FOR DRAWING AND HANDPRINTING — NO TYPEWRITTEN MATERIAL

7.1.2 (Continued)

locally modified by adding a relatively heavy adapter ring to which the bulkhead was riveted. This ring was then bolted to the skin from the outside and a bead of sealant compound applied at the intersection of the common bulkhead and the LH_2 tank wall. The resultant joint therefore, is not a true representation of the full-scale component.

7.1.3 An indication of the degree to which the prototype is duplicated is indicated by examination of the joints of Figure 7.1.3.2 The location of the joints detailed in this Figure is shown on Figure 7.1.3-1 by the lettered circles on the left side of the model drawing. The joints of Figure 7.1.3-2 carry corresponding letter identifications.

7.1.3.1 Figure 7.1.3-2a is the junction of the S-IC fuel tank and the intertank section. The fuel-tank upper bulkhead, the fuel tank wall, and the intertank section are joined by a Y-ring assembly. There exists a deviation from replica scaling in that one leg of the Y-ring is attached by a bolted flange to allow access to the intertank interior areas. The intertank Y-ring connection is an unusual joint, made necessary by the complex corrugated intertank skin, and consists of channeled strips attached alternately to the inside and outside surfaces of the Y-ring leg from the corrugated intertank surface.

A similar joint (Figure 7.1.3-2b) is used at the intersection of the lower LOX tank-bulkhead-LOX-tank-wall and intertank structure. This joint, however is closed by a weld rather than by the bolted flange connection. At the junction of the S-IC LOX tank upper bulkhead and tank-wall- forward-skirt interface shown in Figure 7.1.3-2c, a variation was utilized in the model structure. In order to complete the final weld in the joint, the Y-ring was fabricated in two pieces and the shorter leg was spotwelded to the locally thickened forward-skirt skin. The closure was then effected by an external weld. The resultant hardware has the

USE FOR TYPEWRITTEN MATERIAL ONLY

U-4802 1434 REV. 8-65

USE FOR DRAWING AND HANDPRINTING — NO TYPEWRITTEN MATERIAL

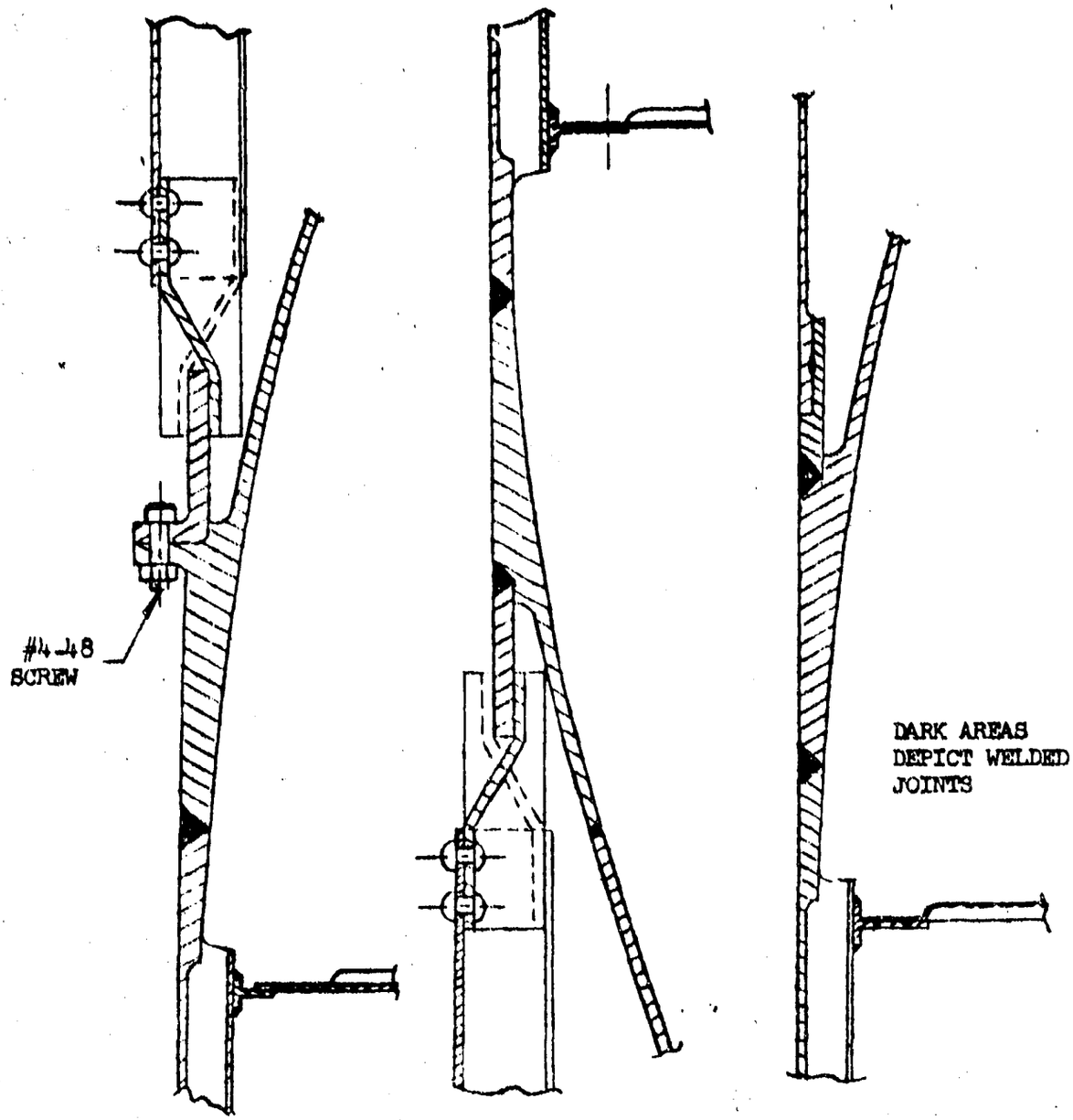

(a) JOINT A* (b) JOINT B* (c) JOINT C*

*Ref Figure 7.1.3-1 and
Paragraph 7.1.3-1

FIGURE 7.1.3-2

7.1.3.1 (Continued)

same basic dimensional properties as would have resulted from direct geometric scaling.

7.1.3-2 The model joints shown in Figures 7.1.3-2d and 7.1.3-2e are scaled duplicates of prototype joints with the exception that the number of fasteners used in the model is less than the number required onthe prototype. The fasteners however, are sized so that the total fastener area was a scaled quantity. The application of replica scaling to the joint of 7.1.3-2d was judged to be the most expedient approach since considerable engineering time would have been required to properly design a more easily manufactured connection with comparable dynamic properties. Further, the scaling laws applicable to a joint of this type are not sufficiently defined to permit evaluation of any alternate design, particularly the effect of the pinned-truss ring frame braces.

7.1.3-3 The remaining structural joints of Figures 7.1.3-2h through 7.1.3-2L are essentially scaled duplicates of the full-scale structure except for deviations in ring-frame and bulkhead construction dictated by fabrication time and cost considerations. The alternative design approach permitted the use of manufacturing procedures which produced geometrically similar structural components with fewer and less intricate machine processes. The resultant structures have the same structural dynamic properties as the more complex exact miniturizations of the full scale structure.

7.2 Fabrication Problems

7.2.1 Other fabrication problems, not classified as design deviations, include machining processes, metal forming procedures, machine and chemical milling tolerances, fastening methods, and welding techniques. Not only can the solution of these problems dictate the degree to which a given launch vehicle can be reproduced to a specified reduced scale, but they also can be significant factors in

USE FOR TYPEWRITTEN MATERIAL ONLY

U3 3807 1474 REV. 8-65

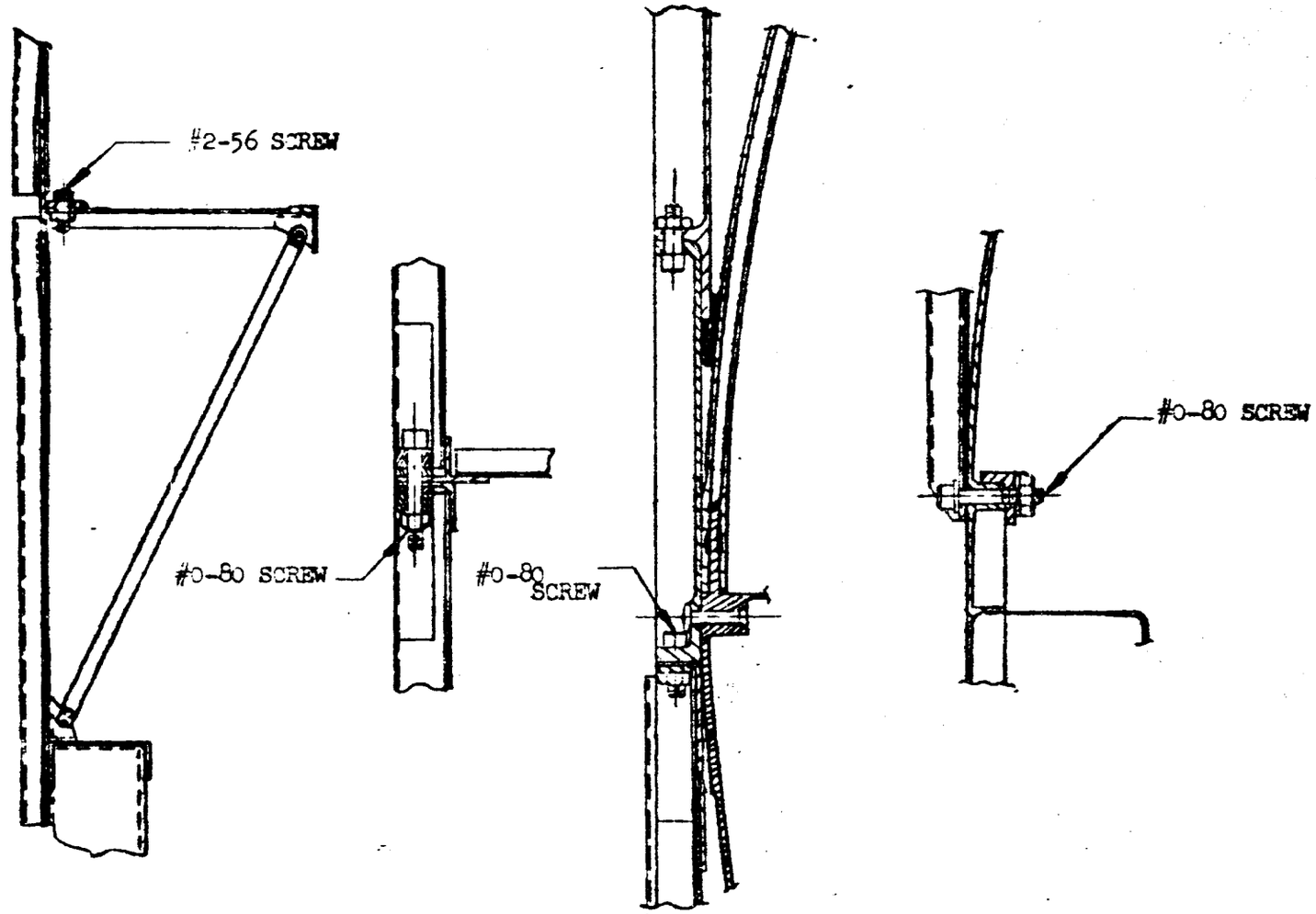

(d) JOINT D* (e) JOINT E* (f) JOINT F* (g) JOINT G*

*Ref Figure 7.1.3-1 and Paragraph 7.1.3-2

FIGURE 7.1.3-2 (Cont.)

USE FOR DRAWING AND HANDPRINTING — NO TYPEWRITTEN MATERIAL

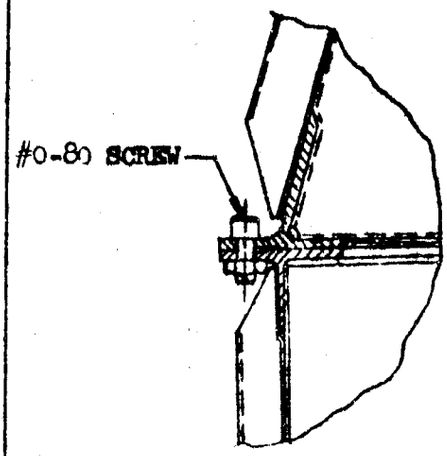

(h) JOINT H*

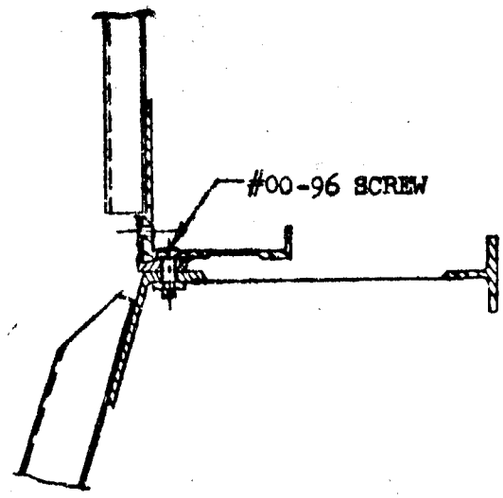

(i) JOINT I*

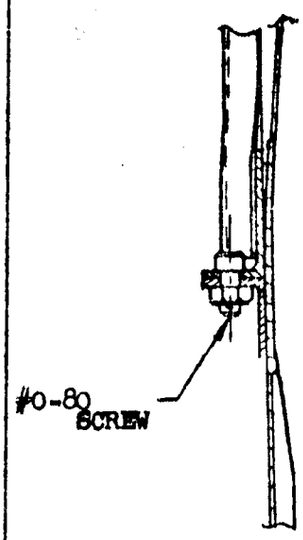

(j) JOINT J*

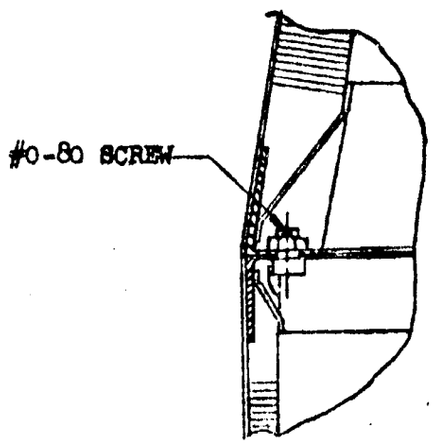

(k) JOINT K

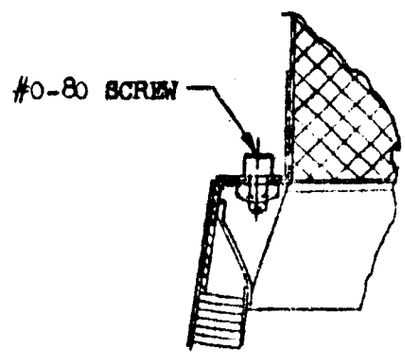

(l) JOINT L*

*Ref Figure 7.1.3-1 and
Paragraph 7.1.3-3

FIGURE 7.1.3-2 (Cont)

7.2.1 (Continued)

establishing the economic feasibility of acquiring a dynamic model such as the 1/10 scale Apollo/Saturn V. If the resulting fabrication limitations are practical, it may be possible to duplicate the full-scale structure at a predetermined reduced size at less cost than would be needed to simulate the structure by employing corresponding expensive engineering time.

A factor found to be beneficial for fabricating the model joints included methods employed to make the required assembly attachments. The full-scale joints were fabricated with appropriate weldments, bolts, nuts and rivets. Obviously the components of the smaller model must be assembled by other methods because of the impracticability of the reduced scale attachment hardware. There must be a compromise both in type and the number of simulated fasteners. Also, it is generally accepted that whenever an effort is made to approximate the structural dynamic properties of a complex structure, the detail design of the joints and attachment hardware should be conservative with a resulting excessively stiff component since any effort to scale directly the size and number of bolts and rivets would be impractical both from a manufacturing and assembly viewpoint.

In addition, although it is true that there can be some conservative distortion of the joint stiffness properties, there can be little hope of achieving any degree of success in reproducing desired damping characteristics when rivets and bolts are replaced by spot welds. Generally, bolted joints can be represented by using convienient, commercially available fasteners, such as 0-80 screws, a lesser number of fasteners being used, the number of which is determined from the correctly scaled fastener area. This design approximates the proper stiffness and damping.

7.3 Conclusions

7.3.1 Replica scaling of the main load carrying structural joints, which together with other structural components necessitated an extension of the state-of-the-art in fabrication techniques, was employed and resulted in a model which duplicates the full-scale structure to a high degree. Extreme full scale design details, such as joint reproduction, were duplicated in the fabrication of the 1/10 scale model.

A careful analysis of the prototype structural details was required to ascertain the practical and economic feasibility of duplicating component hardware to the chosen scale factor. Where model joint design dictated sizes too small to be duplicated, an acceptable design required that only the correct mass and stiffness distributions be retained in the model. Some joints could not be adequately defined by the most rigorous present-day dimensional analysis and therefore were built as scaled duplicates of the full scale members. If the joints were of secondary importance from a dynamic viewpoint, they were a scaled replica because they required less expenditure of effort with duplicate fabrication than with dynamic simulation. All substitutions were carefully considered, however, lest their inclusion degrade the usefulness of the total structure through either introduction of misleading response data or the suppression of critical responses.

With proper care in the selection of the scale factor and methods of manufacture and with judicious evaluation of deviations from direct scaled duplication, the replica models are considered technically and economically feasible for studies of the structural dynamic characteristics of large complex vehicles.

An in-depth description of the project is available in Reference 2, from which the information presented herein was derived.

USE FOR TYPEWRITTEN MATERIAL ONLY

REFERENCES

1. D2-11165 - Structural Development Note #9 - Sandwich Material, Rev. 3-31-58

Presents design criteria and allowables for structural design and stress analysis of sandwich components for aircraft application. Provides background in this type of construction for designers.

2. NASA TN D-4138 - Design and Fabrication Considerations for a 1/10 - Scale Replica Model of the Appolo/Saturn V.
(ASTIC 056062)

USE FOR TYPEWRITTEN MATERIAL ONLY

8.0 DOCUMENT OPTION FOR FUTURE WORK

8.1 Originally planned as a one year effort, the joint study was reduced by six months due to budgetery and manpower requirements. While it is recognized that a great deal more information might be included in this document, it is felt that in its present form it provides a useful tool to the designer faced with the problems of missile or space vehicle joint design.

Should a decision be forecoming to continue the effort, the immediate direction taken will be to investigate raceway and other non-structural joints. Follow-on effort will be a report on the latest state-of-the-art in joint design concepts, missile carrier interface joints, joint fastener hardware, plumbing and electrical joint interfaces and recent advances in materials and process technology as applied to missile joints.

USE FOR TYPEWRITTEN MATERIAL ONLY

U3 4607 1434 REV. 8-65

ACTIVE SHEET RECORD

SHEET NUMBER	REV LTR	ADDED SHEETS: SHEET NUMBER	REV LTR	SHEET NUMBER	REV LTR	SHEET NUMBER	REV LTR	ADDED SHEETS: SHEET NUMBER	REV LTR	SHEET NUMBER	REV LTR
1	A							45	A		
2								46			
3								47			
4								48			
5								49			
6								50			
7								51			
8	A							52			
		9	A					53			
		10						54			
		11						55			
		12	A					56			
13	A							57			
		14	A					58	A		
15	A					59	A				
		16	A			60					
		17				61					
		18				62					
		19	A			63					
20	A					64					
21	A					65					
		22	A			66					
		23				67					
		24	A			68					
25	A					69					
26						70					
27						71					
28						72					
29						73					
30						74					
31						75					
32						76					
33						77					
34						78					
35						79					
36						80					
37						81					
38	A					82					
		39	A			83					
40	A					84					
41						85					
42						86					
43						87					
44	A					88	A				

ACTIVE SHEET RECORD

SHEET NUMBER	REV LTR	ADDED SHEETS				SHEET NUMBER	REV LTR	ADDED SHEETS			
		SHEET NUMBER	REV LTR	SHEET NUMBER	REV LTR			SHEET NUMBER	REV LTR	SHEET NUMBER	REV LTR
89	A					135	A				
90						136					
91						137					
92						138					
93						139					
94						140					
95						141					
96						142					
97						143					
98						144					
99						145					
100						146					
101						147					
102						148					
103						149					
104						150					
105						151					
106						152					
107						153					
108						154					
109						155					
110						156					
111						157					
112						158					
113						159					
114						160					
115						161					
116						162					
117						163					
118						164					
119						165					
120						166					
121						167	A				
122											
123											
124											
125											
126											
127											
128											
129											
130											
131											
132											
133											
134	A										

REVISIONS			
LTR	DESCRIPTION	DATE	APPROVED
A	Renumbered sheets and made the following changes to accomplish a complete revision: Revised sheets: 2, 4, 6, 13, 20, 21, 25, 26, 27, 29, 31, 34, 35, 36, 41, 44, 62, 63, 69, 75, 77, 15, 83, 87, 91 thru 102, 103, 104, 107, 109, 113, 115, 117, 119, 126, 7, 8, 30, 40, 118. Added new sheets: 9, 10, 11, 12, 14, 16, 17, 18, 19, 22, 23, 24, 39, 45 thru 58		