UNCLASSIFIED

AD NUMBER
AD839412
LIMITATION CHANGES
TO: **Approved for public release; distribution is unlimited. Document partially illegible.**
FROM: **Distribution authorized to U.S. Gov't. agencies and their contractors; Critical Technology; AUG 1968. Other requests shall be referred to Army Office of the Assistant Chief of Staff for Force Development, Washington, DC 20310. Document partially illegible. This document contains export-controlled technical data.**
AUTHORITY
AGO, d/a ltr, 29 Apr 1980

THIS PAGE IS UNCLASSIFIED

THIS REPORT HAS BEEN DELIMITED
AND CLEARED FOR PUBLIC RELEASE
UNDER DOD DIRECTIVE 5200.20 AND
NO RESTRICTIONS ARE IMPOSED UPON
ITS USE AND DISCLOSURE.

DISTRIBUTION STATEMENT A

APPROVED FOR PUBLIC RELEASE;
DISTRIBUTION UNLIMITED.

DISCLAIMER NOTICE

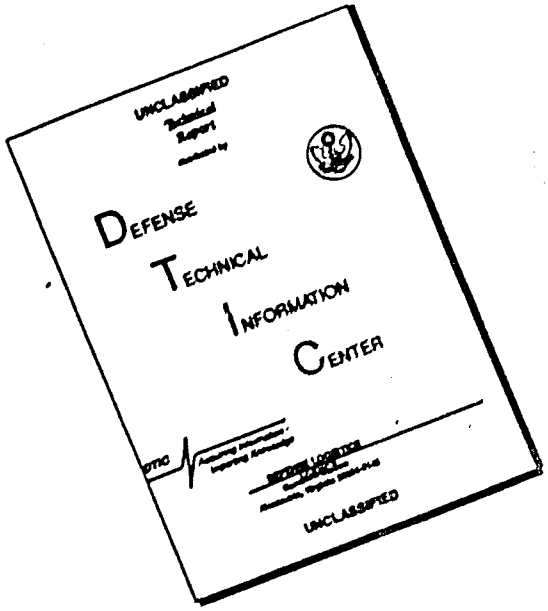

THIS DOCUMENT IS BEST QUALITY AVAILABLE. THE COPY FURNISHED TO DTIC CONTAINED A SIGNIFICANT NUMBER OF PAGES WHICH DO NOT REPRODUCE LEGIBLY.

FOR OFFICIAL USE ONLY

DEPARTMENT OF THE ARMY
OFFICE OF THE ADJUTANT GENERAL
WASHINGTON, D.C. 20310

IN REPLY REFER TO

AD 839412

AGAM-P (M) (7 Aug 68) FOR OT RD 682193 15 August 1968

SUBJECT: Operational Report - Lessons Learned, Headquarters, 589th Engineer Battalion (Const), Period Ending 30 April 1968 (U)

SEGMENT #2 UNCLASSIFIED

SEE DISTRIBUTION This document is subject to special export controls and each transmittal to foreign governments or foreign nationals may be made only with prior approval of

Hqs, for Force Development - FOR OT-RD - DA, Office of Asst Chief of Staff, Wash, D.C. 20310

1. Subject report is forwarded for review and evaluation in accordance with paragraph 5b, AR 525-15. Evaluations and corrective actions should be reported to ACSFOR OT RD, Operational Reports Branch, within 90 days of receipt of covering letter.

2. Information contained in this report is provided to insure that the Army realizes current benefits from lessons learned during recent operations.

3. To insure that the information provided through the Lessons Learned Program is readily available on a continuous basis, a cumulative Lessons Learned Index containing alphabetical listings of items appearing in the reports is compiled and distributed periodically. Recipients of the attached report are encouraged to recommend items from it for inclusion in the Index by completing and returning the self-addressed form provided at the end of this report.

BY ORDER OF THE SECRETARY OF THE ARMY:

Kenneth G. Wickham

KENNETH G. WICKHAM
Major General, USA
The Adjutant General

1 Incl
as

DDC
SEP 16 1968
A

DISTRIBUTION:
Commanding Generals
US Continental Army Command
US Army Combat Developments Command
Commandants
US Army Command and General Staff College
US Army Engineer School

Copies furnished:
Office, Chief of Staff, US Army
Deputy Chiefs of Staff

Protective marking is canceled when separated from inclosure(s)

FOR OFFICIAL USE ONLY

87

Copies furnished (Cont'd)
Chief of Engineers
Chief of Research and Development
Assistant Chiefs of Staff
Research Analysis Corporation
OSD(SA), Assistant For Southeast Asia Forces
Defense Documentation Center
Security Officer, Hudson Institute
Commanding Officers
  US Army Limited War Laboratory
  US Army Logistics, Doctrine Systems & Readiness Agency
  589th Engineer Battalion

WHITE SECTION
BUFF SECTION
2

3

DEPARTMENT OF THE ARMY
HEADQUARTERS 589TH ENGINEER BATTALION (CONST)
APO San Francisco 96238

EGD-BC-CO 15 May 1968

SUBJECT: Operational Report of 589th Engineer Battalion (Construction), For Period Ending 30 April 1968 (RCS CSFOR-65(R1)

THRU: Commanding Officer
35th Engineer Group (Construction)
APO 96238

Commanding General
18th Engineer Brigade
APO 96377

Commanding General
US Army Engineer Command, Vietnam (Prov)
APO 96375

Commanding General
United States Army, Vietnam
ATTN: AVHGC (DST)
APO 96307

Commander-In-Chief
United States Army, Pacific
ATTN: GPOP-DT
APO 96558

TO: Assistant Chief Of Staff For Force Development
Department Of The Army (ACSFOR, DA)
Washington, D.C. 20310

EGD-BC-CO 15 May 1968
SUBJECT: Operational Report of 589th Engineer Battalion (Construction), For Period Ending 30 April 1968, (RCS CSFOR-65(R1)

1. SECTION 1, OPERATIONS: Significant Activities

a. Command Changes:

(1) During the quarter the 589th Engineer Battalion (Const) was relieved from assignment to the 45th Engineer Group (Const) and assigned to the 35th Engineer Group (Const). This change of assignment became effective on 15 Mardh 1968.

(2) There was a turnover in commanders of four of the five companies during the reporting period. Capt Alfred P Cochran, HHC, departed on 21 March 1968. The position was filled by 1st Lt Thomas R Englehart from 21 March 1968 to 4 April 1968. He in turn, was replaced by 1Lt James G Montague, who continues to serve also as Communications Officer. Captain Marcel F Reynolds, Commanding Officer of Company B was replaced by Captain Phillip W Suitt on 5 April 1968. Capt Reynolds moved to the position of S4 replacing Captain Edgar A Marshall who returned to CONUS. 1Lt John W Morgan assumed command of Company C on 4 April 1968 replacing Captain James L Campbell who was reassigned to Fort Belvoir. Captain Thedore W Adkins replaced Captain Lawrence D Doff in command of Company D on 12 April 1968. Captain Doff returned to CONUS.

b. Hq/Hq Co: The Utilities Section continued tasks of enhancing overall living conditions at the battalion base camp by constructing a 10'x24' shower and an additional 18'x52' tent billet. Maintenance operations were also improved by the construction of a grease rack and placing of a 20'x32' concrete slab for the maintenance tent. This section also bolstered the perimeter defense by emplacing 6,200 feet of double apron barbed wire fence and 12,400 feet of concertina fence. Thirty-nine trip flares were interspersed throughout the perimeter. An additional guard tower was erected, one 81mm mortar pit was dug, and continuous maintenance was performed on 63 perimeter defense structures. The company also provided armed guards for the 20 local nationals hired daily to perform various in-house chores. The responsibility for operation of the water point was transferred to PA&E on 23 February 1968 due to the possibility of unit deployment to the north. 647,590 gal of water had been produced during the period.

c. Company A: During the quarter the company continued providing maintenance support to QL-19 through use of organic asphalt equipment. This consisted mainly of performing pot hole repair with hot mix asphalt produced by a towed dryer-mixer. This is a continuous project and requires constant attention to keep the LOC in a high state of maintenance. 12,000 sq ft of highway was paved during this period.

FOR OTRD
682193

EGD-BC-CO 15 May 1968
SUBJECT: Operational Report of 589th Engineer Battalion (Construction), For Period Ending 30 April 1968, (RCS CSFOR-65(R1)

The asphaltic concrete plant commenced operations on 8 April 1968. In order to produce the aggregate required for use in the asphalt plant, two types of crusher complexes were finally established. First, crushing operations for the asphalt aggregate consisted of crushing the coarse aggregate, 1"(-) material. The initial crusher setup for this aggregate production consisted of a 75 TPH primary unit (jaw crusher), a cone crusher, and a secondary unit(roll crusher) from the 75 TPH crushing and screening plant. This provided for three stages of reduction. Initial crushing operations with this complex resulted in a failure to meet gradation specifications. The reason for this failure was due to the large corregations on the roll crusher. The material would enter the corrugations and, being smaller than the corregations, would not come in contact with the companion smmoth roll. An additional secondary unit was modified by the installation of two smooth rolls with welded beads parallel to the long axis to provide for the grabbing action lost by removal of the corrugated roll.
Installation of this machine into the complex then provided four stages of reduction and also enabled the crushing of coarse aggregate to specifications. With this arrangement, a capability of producing 225 cubic yards of coarse aggregate per day was realized. We were also able to obtain approximately 75 cubic yards per day of fine aggregate as a by-product of this operation. Crushing of the coarse aggregate then continued until about a months supply was on hand. It was realized early in this operation that enough fine aggregate could not be produced to operate the asphalt plant on a desired daily basis. The complex was then converted to fine aggregate production by adjusting the rolls and changing the screens. An additional crusher complex consisting of primary and secondary machine, was then setup to produce coarse aggregate for the asphalt plant. The roll crusher was modified by welding beads in the corrugations to decrease the corrugation depth. It must be pointed out that the use of these two complexes produces only enough fine aggregate ("free material" and deliberately crushed material combined) in one days crusher operation to operate the asphalt plant for one day. Consequently any breakdown of the crushers or inclement weather adversely affects asphalt plant production. Stated differently, the full scale, unhampered operation of the asphalt plant requires aggregate at a rate which is unattainable with presently authorized 75 TPH crushers.

Quarry production for the period was 30,700 cubic yards of 2"(-) base course material, 3,200 cubic yards of 1"(-) course aggregate material, 3,800 cubic yards of fine aggregate and 2160 cubic yards of 2"(-) concrete aggregate.

Company A also operates the battalion DS engineer maintenance shop. During the period, four crusher units were overhauled by the DS Shop and 252 items of engineer equipment were repaired. This resulted in an expenditure of 1,273 man-hours for the crushers and 5,079 man-hours for engineer equipment. Additionally, 136 items of ordnance equipment were repaired with the expenditure of 2,390 man-hours.

d. Company B: For the first 69 days of the quarter, Company B continued to be engaged in four major construction projects within the confines of Camp Radcliff, An Khe. These projects consisted of work on the An Khe Airfield, construction of two 54 foot control towers, construction of aircraft maintenance hangers and installation of a power distribution system. Work progress was adversely affected during the period due to the rotation of personnel to CONUS and the loss of men due to wounds as a result of hostile action. On the night of 4 March 1968, the billet area of Company B sustained a mortar attack in which 14 enlisted personnel were injured. This was the first such attack on billeting areas at An Khe and much loss of work effort on projects resulted. This was due not only to loss of personnel but also to diversion of work effort from project construction to installation of underground personnel bunkers. The approaching monsoon season in the Pleiku area required additional engineer effort to complete certain vital logistic and LOC facilities prior to the onset of rain. Therefore the company, on 9 April 1968, was placed under the operational control of the 937th Engr Gp (Cbt) at Pleiku to assist in accomplishing this objective. Since moving to Pleiku the company has initiated the following projects: construction of two 80'x144' aircraft maintenance hangers, a 20,000 KW power generating station, a 40'x100' pre-engineered steel warehouse, placing of 35,600 sq yds of M8A1 matting for hardstands and upgrading of QL-14 north of Pleiku towards Dak To. Data (as of the project suspension on 9 April) are as follows:

(1) An Khe Army Airfield - During the first two months of the quarter, maximum earth moving effort available within the company plus that from other elements of the battalion were expended toward rehabilitating the parallel taxiway. This taxiway will be 40 feet wide and 4,365 feet long and will be surfaced with asphaltic concrete. Due to the presence of underlying layers of 'soft' material, extensive excavation of this undesireable material in depths from 3 to 8 feet is required. A high quality fill material is available at a borrow site approximately four miles from the airfield. Difficulty was experienced in using this material due to its high natural moisture content of approximately 24%. In place density for the compacted material calls for a 16% optimum moisture content. A great deal of effort was expended in scarifying and aerating the material to lower the moisture content. As of 4 April 1968, 55,300 cu yds of waste material had been excavated from the taxiway and 27,200 cu yds of fill material had been hauled in. Compaction equipment consisted of three sheepsfoot rollers (2 drum) and a 50 ton pneumatic roller.

Daily in-place density tests were taken to assure the desired compaction of 95 per cent modified AASHO density. The connecting ramp at the north end of the taxiway is ready to receive the 11" of crushed base course material and subsequently the ten inches of non reinforced concrete pavement. This rampway will be 72 feet wide and 225 feet long. Future items for construction are another cutoff concrete ramp at the south end, a 400 foot asphaltic surfaced connecting ramp and a 350'x1000' foot parking apron capable of accommodating six C-130 and six CV-2 type aircraft. The one mile airfield access road was completed and opened to traffic on 27 February 1968.

(2) Maintenance Hangers-Work on the 190'x175' steel hanger reported on the previous report has stopped due to a lack of 1,000 watt flood lights for the interior lighting. The construction of an 80'x216' Pascoe maintenance hanger was started during this quarter. Work during the period has consisted of placing the reinforced concrete column footers and the concrete grade beam. Additionally, four of the 14 required reinforced concrete strips for the concrete floor slabs have been placed. These were placed prior to erection of building structure to assure non-interference of the erected columns with the screeding of the concrete slabs. The first half of the steel skeleton has been erected and upon the erection of the remaining portion, the galvanized roofing and siding will be placed. Some difficulty has been experienced in building such structures due to the nonavailability of all the proper parts; however, a packing list has been obtained for this building which has greatly aided in the inventory of parts on hand. Future construction of similar structures will be greatly expedited due to the invaluable experience gained in erection of the first half of this building frame.

(3) Airfield Control Towers; Two 54' control towers for controlling air traffic have been constructed for the An Khe Army Airfield and the Golf Course Heliport at Camp Radcliff. The towers are of wood frame construction with the 8"x8" upright columns imbedded in concrete footers. The footers are tied into a concrete grade beam which provides a good stable base. A hexagonal shaped control cab was constructed at the top of this tower to house the electronic equipment which was installed by the FAA personnel charged with such work in the theatre. Due to the somewhat high winds that are prevalent at the airfield, it was decided to provide for increased tower stability. Steel 5/8" cable was used at each corner of the cab platform and was terminated in concrete anchorages. The tower constructed at the Golf Course is a similar structure except for the control cab. Only the electrical work and the electronics shelters remain to be installed after the control cab is completed.

EGD-BC-CO 15 May 1968
SUBJECT: Operational Report Of 589th Engineer Battalion (Construction) For Period Ending 30 April 1968 (RCS CSFOR-65(R1)

(4) Power Distribution System - The Power Distribution Team (Prov) attached to the Battalion from the 35th Engr Gp (Const) was further attached to Company B for administrative support and operational control. The team was augmented by personnel from units within the battalion to provide a larger work force. However, rotation of personnel during the quarter has reduced the available team personnel to approximately the original 12 men. Work on this project, in so far as battalion and company responsibility was concerned, commenced on 1 February 1968. The project involves the installation of 500 power poles, 300 transformers, stringing of 66,000 linear feet of primary wire and 329,000 linear feet of secondary wire as well as providing 2,200 service drops. Previously this project had called for the use of ten 1500 KW generators to furnish the central power. The reduced scope of the project resulted in using only six generators which further precipitated a redesign of the project. A change in priorities of installation was also required due to the 1st Air Cavalry Division moving out of An Khe to conduct tactical operations; however, the priorities were again readily determined and work continued in an orderly and efficient manner. On 4 March 1968, as a result of the mortar attack on Company B billet area, the Senior NCO on the team was seriously injured and subsequently evacuated to CONUS. This loss contributed to the lack of experiences NCO's to supervise and direct the efforts of the power team. Many problems incidental to this project have been solved by close coordination with the installation coordinator and the post engineer. The team emplaced 65 power poles, erected 46,000 linear feet of wire, completed 200 service drops and installed 67 transformers during the report period.

A great aid to the conduct of this project will be the receipt of two trained 13 man power teams expected to become attached to the battalion in May, 1968:

e. Company C: The company continued to work on projects in the Cha Rang area, An Son Valley (ROK Valley) and Highway QL-19 from the junction of Highways QL-19 and QL-1 to the foot of An Khe Pass.

The company was designated as a reaction force for the Qui Nhon area during the report period. The Commanding General, Qui Nhon Support Command, decided to secure the Qui Nhon Airfield during the recent TET offensive. This job was given to the company and it served in this capacity from 7 February 1968 through 4 March 1968. No construction was accomplished during this time. Construction effort was further lost due to the earth moving platoon being placed under the operational control of the 45th Engineer Group (Const) north of Hue on 20 March 1968. The platoon is due to return around the middle of June. The foregoing events have significantly hampered company projects already in progress. They are as follows:

9

EGD-BC-GO 15 May 1968
SUBJECT: Operational Report Of 589th Engineer Battalion (Construction), For Period Ending 30 April 1968, (RCS CSFOR-65(R1)

(1) Repair of Enemy Damage - On the night of 27 February 1968, two spans of bridge 19-11 were destroyed due to enemy demolition action. During the early morning hours of 28 February 1968, the company transported to the bridge site the panel bridge materials required for erection of a tactical bridge at first light. Early on the morning of 28 February 1968, a 160 foot double-single panel bridge was erected over the blown spans and the panel bridge was opened to Class 35 traffic at 1600 hours, 28 February 1968. The company then reinforced the 110' of this bridge during the hours of darkness on 28 and 29 February 1968. Reinforcement increased the strength of the bridge to permit the crossing of Class 65 wheeled vehicles. The bridge was again opened to traffic at 0600 hours, 29 February 1968. Another 110 foot of double-double panel bridge was erected down stream to provide for two way Class 65 traffic for the uniterrupted flow of convoys between Qui Nhon and Pleiku and to serve as a by-pass during reconstruction of the original highway bridge. Reconstruction of the permanent bridge consisted of construction of a timber pile pier, installation of one 55 foot span and one 41 foot span using 10 each 36" WF 230 steel beams, providing an 8"x12" timber deck with 3"x12" timber treadway. The finished bridge was reopened to traffic on 10 April 1968.

(2) LOC Maintenance - The company exerted much effort toward the maintenance and a upkeep of Highway QL-19. Work consisted of removing the failed pavement, repairing the sub base and basecourse and repaving with asphaltic concrete. This work was hampered somewhat due to the neccessity for maintaining traffic flow.

(3) GS Maint Facility - During the quarter, the GS Maintenance Facility : Cha Rang was completed. Completion of a 120'x400' Butler building and placing of 21,000 square yards of DBST hardstands were the last remaining items on this project. The company assumed responsibility for this project in May 1967 and completed it on 22 March 1968.

(4) Route LTL-6B - Construction was started on a two cell, 9'x9', reinforced concrete box culvert. The box culvert will replace a single-lane, 18 foot timber bridge and will meet MACV road standards upon completion early in the next quarter.

EGD-BC-CO 15 May 1968
SUBJECT: Operational Report Of 589th Engineer Battalion (Construction), For Period Ending 30 April 1968, (RCS CSFOR-65(R1)

f. Company D: During this quarter Company D continued work on the upgrading of QL-19 from An Khe to the base of Miang Giang Pass, began reconstruction of bridge 19-26, started construction on an access road up Hon Cong Mountain to the signal facility, installed a three barrel 60 inch culvert at the Camp Radcliff Post Exchange, repaired enemy damage to bridge 19-18, constructed six by-passes for bridges on QL-19 within their AOR and dismanteled Armco revetments for the 1st Calvary Division. Projects completed during the quarter were the Division Supply Point and the Division Supply Points Access Roads and the Division Heliport. Additionally, the company assumed responsibility for Company B projects at An Khe upon the departure of that company to Pleiku on 9 April 1968. The 444th Concrete Mixing and Paving Detachment and the 35th Engineer Group Power Distribution Team became attached to the company as a result of the move of Company B. Pertinent items on project construction are as follows.

(1) LOC UPGRADE - The company prepared the sub base and placed base coarse material to prepare 6.5 miles of highway QL-19 for pavement. Additionally, continuous grading of unimproved portions of the highway was conducted. Pavement operations commenced on 6 April 68 and to date approximately 5 miles of road have been paved. Preparation of the highway for pavement is programmed one mile ahead of the pavement. This reduces to a minimum extensive reworking of the base coarse ahead of paving operations. Preparation of the road for more than a mile in front of paving is wasteful of construction effort due to extensive reworking as a result of heavy traffic.

(2) REPAIR OF ENEMY DAMAGE During the night of 4 March 1968, enemy action against bridge 19-18 resulted in damage to the bridge deck due to explosion of a pressure charge in the west bound lane. Damage was confined to a 3 foot diameter portion of the concrete deck. The force of the explosion did no damage to the steel stringers. Concrete was chipped out to provide for a rectangular patch area 4'x7'. Reinforcing steel was replaced and concrete was placed in the damaged area. One lane of traffic was maintained throughout the concrete curing time and at the end of 21 days the entire bridge was again opened to traffic.

(3) BRIDGE 19-26 Work was started on the reconstruction of bridge 19-26. Three spans on this bridge had been destroyed due to enemy actions. Work to date has consisted of removing the damaged spans from the bridge site, forming and placing of two reinforced concrete pier foundation, preparation of stringers, steel columns and precutting of bridge timbers for the timber deck. This bridge when reconstructed will have a steel and concrete substructure and a steel and timber wood super structure, 3 spans, with the one remaining (original) concrete decked, steel stringer span. Completion of this bridge is expected in late May.

EGD-BC-CO 15 May 1968
SUBJECT: Operational Report Of 589th Engineer Battalion (Construction), For Period Ending 30 April 1968, (RCS CSFOR-65(R1)

The scarce supply of oxygen has retarded contruction of this bridge somewhat.

g. 51st ASPHALT PLATOON: The Asphalt Platoon commenced paving of QL-19 west of An Khe on 8 April 68. Delay in starting of paving was due to two items. First, not all of the items required for proper set up of the plant arrived, and second, problems were experienced in crushing aggregate that would meet gradation specifications. Items short on the asphalt plant were a transition exhault section leading from the dryer to the dust collector and an exhaust stack for the dust collector. A stack for the dust collector was fabricated using 55 gallon drums. The transition section was located after diligent search of the supply depot. The non-availability of repair parts for the asphalt plant precludes quick and efficient repair work. Maintenance personnel have been quite proficient in fabricating needed items. Although this permits operation of the plant, inefficiency is a constant factor due to "make do" repairs. Weather and inexperienced personnel also limit production. Wet roads cannot be effectively paved; wet rock cannot be crushed efficiently. New people must be trained during what would otherwise be productive hours.

During the period the asphalt plant produced 9,300 tons of asphalt and the paving crew paved approximately 5 miles of road. The asphalt mix designed for the paving resulted in an asphalt content of 6.5 per cent, a 3 per cent voids ratio, a flow of 13 and an average stability of 2,100 psi. This very high quality paving mixture for road paving can also be used for airfield pavement. The aggregate used in the plant consists of 45% coarse aggregate 1"(-) and 55% fine aggregate, #8(-). No mineral filler is required to be added to processed materials.

h. 511TH PANEL BRIDGE CO: During the first part of the quarter, the company continued training its replacement personnel in erection procedures for their organic bridge, preformed their secondary mission of dump truck support and constructed a 110' double double bridge as a by-pass for bridge 19-11. On 15 February the company was relieved from attachment to the 589th Engr Bn (Const) and attached to the 45th Engr Gp (Const).

i. 444TH CONCRETE MIXING AND PAVING DETACHMENT (CM&P): The detachment produced only 1662 cubic yards of concrete during the report period. This was due to a decreased demand occassioned by curtailment of activities at Camp Radcliff, An Khe. Prior to 9 April 68, the detachment was scheduled to support Company B with concrete paving operations. However, upon the move of Company B to Pleiku construction activities on the An Khe airfield were stopped due to the lack of sufficient earth moving equipment with which to do the job.

Additionally cantonment construction at Camp Radcliff had been stopped due to overbuilding of requirements and to the departure of the 1st Air Cavalry Division. The detachment was attached to Company D. Upon the departure of Company B and, in addition to periodically operating the plant and maintaining its own equipment, the detachment received the mission of constructing an 80'x216' Pascoe aircraft maintenance hangar in support of Company D.

j. PERSONNEL AND ADMINISTRATION - During the quarter, the 589th Engr Bn had an average enlisted strength of 792 of 132 below its authorized level as compared to 50 below for the previous quarter. During the first ten days in April, approximately 280 enlisted men rotated. During the entire quarter, 18 officers departed and only six arrived. The current projected analysis is to expect replacements for 90% of departing personnel.

The shortage of required military occupational specialities impaired the ability of the battalion to function at its maximum. Although the personnel fill rate was 88 per cent (411 departees, 363 arrivals), job positions requiring certain skills could seldom get filled with personnel possessing those skills.

The battalion also pursued an ambitious awards and decorations program. During the past quarter, 307 personnel were recommended for awards. Most of these were service awards for individuals due to rotate; however, 13 were for achievement, 26 were for Valor and 8 were for the Purple Heart.

k. MORALE AND WELFARE OF THE BATTALION- Esprit de Corps was very much in evidence throughout the report period. The base camp was improved, chapel attendance continued at its previous above average rate and "Floor Shows" were fully supported by the troops. The battalion consistently demonstrated the value of command emphasis on the religious program.

l. INTELLIGENCE AND SECURITY - A total of eight mine incidents occurred on highway QL-19 during the report period. Seven mines were pressure types and one was command detonated as the enemy laid down a base of small arms fire. These incidents resulted in six US WIA, 2 GVN WIA, and 3 VC KIA. Enemy minings were immediately followed by "sweeping" operations which usually resulted in negative findings. The only battalion combat equipment losses during the period were two road graders.

EGD-BC-CO 15 May 1968
SUBJECT: Operational Report Of 589th Engineer Battalion (Construction), For Period Ending 30 April 1968, (RCS CSFOR-65(R1)

Routine mine sweeping actions revealed one mine and one booby trap in the battalion area of responsibility. Twelve ½# blocks of TNT wrapped in plastic and attached to a bamboo pressure device, with battery power source, were found buried on highway QL-19 on 5 February 1968. Also, a Chi-Com mine (7# of expl) was also discovered on QL-19 and removed by the Explosive Ordnance Disposal (EOD) team on 6 February 1968. One sniping incident occurred on QL-19 in which one 5-ton dump truck received 7 hits from an enemy automatic weapon. The driver was injured only from the flying glass. This incident occurred on 21 February 1968.

m. LOGISTICS

(1) Supply: The phase down of construction by the Ad Hoc Committee in the An Khe area during the latter part of this report period permitted the S4 to close down its Class IV yard in what had been the battalion's forward location. The S4 received its second authorized 10,000 lb forklift during this period and concurrent with the return of materials from An Khe, completed the rewarehousing of base camp's materials yard. In the past year, the S4 materials yard has expanded from one GP tent and 6,000 square yards of open storage to a six GP tent warehouse complex and 65,000 square yards of open storage. An accurate materials inventory along with location status was entered on stock record cards for the first time since the battalion has been in country (prior to this time material inventories were being maintained on plastic cards with grease pencil). This inventory has permitted the S4 to provide better construction support as well as return excess serviceable construction materials to the Army inventory. Two local national employees are being trained satisfactorily to maintain the stock records cards under the guidance of one enlisted man. Administratively, the S4 has spent a major portion of this report period reviewing the entire logistics program of the battalion. All supply areas have been inspected to include mess, ammunition, clothing and supply room records and fire protection. The five company supply sergeants are now working full time as supply sergeants in their units. Their extra duty as part time construction materials expediters (as was reported in an earlier OHLL) was assumed by two full time E-5 enlisted men drawn from battalion resources. These men have construction backgrounds and are rapidly grasping the fundamentals of the Vietnam supply system. The phase down of construction saw portions of the battalion move north and further west. These moves were directed with only short advance notice and, as such, re-emphasized the need to maintain valid TOE requisition status as well as plans for the disposition of station property and construction materials not deployable with the unit.

EGD-BC-CO 15 May 1968
SUBJECT: Operational Report Of 589th Engineer Battalion (Construction), For Period Ending 30 April 1968, (RCS CSFOR-65(R1)

(2) Maintenance: The overall average deadline rate for battalion equipment was kept below 6 per cent during the report period. This was attained by constant emphasis on materiel readiness and by frequent spot checks accompanied by immediate corrective action.

A new program controller for the Hopkins hot oil heater was received during the period. The new controller was received against a requisition which carried the Federal Stock Number (FSN) for the old one. The two items are alike in function but not in appearance. Also, vibrations from the 15 KW generator (mounted with the heater) can be cut by 75 per cent if the generator is placed on the ground and not mounted on the trailer.

Three WABCO 440H motor graders were received minus appropriate repair parts manuals. Consequently, repair parts must be acquired from sources other than normal supply channels until a listing of FSNs or manufacturers' parts numbers can be obtained for the repair parts. While attempting to repair an inoperative clutch on this grader, it was discovered that the 5-ton multi-fuel throwout bearing (FSN 3110-186-5037) and carrier (FSN 2520-737-6156) were suitable substitutes for those in the grader. The5-ton truck clutch disk (FSN 2520-097-3197) could be made to work in the grader by interchanging the hubs. This successfully applied field expedient has proven to be satisfactory in operation.

The tractors, crawler, caterpillar, D-7E, were deadlined for a significant number of days due to the cracking of hydraulic lines from the control valve to the hydraulic tank. Loose hydraulic control valve mounting bolts caused the condition in 90 per cent of the cases. Making the tightening of these bolts a part of daily operators maintenance virtually eliminated the problem in this battalion.

The track roll frames on the above tractors frequently cracked in front of the blade (push arm) mounting bracket. The Caterpillar representative's recommendation for repair was to "V" cut the crack on both sides of the frame before welding. This organization repaired two tractors using this method at the beginningof the report period and the repair job has been satisfactory thus far.

The battalion has 12 front loaders, Hough model, H90CM. The main frame behind the front axle mounting plate and the plate itself has cracked on 11 of these front loaders at one time or another. Repair involved cutting off the old plate and welding on a new one which is thicker and 3 inches longer than the old one. To insure hole alignment, bolt the mounting plate to front axle before back welding the plate to the main frame.

15

EGD-BC-CO 15 May 1968
SUBJECT: Operational Report Of 589th Engineer Battalion (Construction), For Period Ending 30 April 1968, (RCS CSFOR-65(R1)

n. "CIVIC ACTION" - The battalion continued its contribution to the civic action program during the quarter as follows:

(1) Supported local regional and popular forces (RF/PF) with construction materials to build defense bunkers and reinforce perimeter areas. Material included over 2000 bags of cement and 400 rolls of barbed wire.

(2) Five thousand pounds of surplus foodstuff were distributed to the dependents of local RF/PF.

(3) The five-room single story school in An Khe was completed (including desks and chairs) on 31 March 1968. This climaxed approximately six months work utilizing almost every battalion element to complete the project funded by the citizens of Waynesville, Ohio. Col John H. Hughes, 35th Engr Group Commander, participated in the dedication ceremony.

(4) One hundred equipment hours and 140 man-hours completed the Binh Khe High School. The 10-room, 2 story, building is being utilized to educate the entire district of Binh Khe.

(5) Donation of $149.90 was made from the chaplains' fund to the Phu Phong Orphanage.

(6) The battalion surgeon examined and treated an average of 1200 Vietnamese per month during the quarter. This included personnel treated in the battalion dispensary and those at two Vietnamese dispensaries. Twenty Vietnamese personnel are presently being treated for pulmonary tuberculosis under MEDCAP.

EGD-BC-CO 15 May 1968
SUBJECT: Operational Report Of 589th Engineer Battalion (Construction), For Period Ending 30 April 1968, (RCS CSFOR-65(R1)

2. Section 2, Lessons Learned: Commander's Observations, Evaluations And Recommendations

a. Personnel. None

b. Operations

Rock Gradation.

(a) OBSERVATION. Required gradation on rock is assured when the distance betwen rock crusher rolls is decreased by the welding of hard surface beads onto the rolls.

(b) EVALUATION. Fine aggregate, ¼"(-), is needed to constantly supply the asphalt plant operation. The crusher was not producing ¼"(-) material because the corrugations were of such a size as to allow minimum contact between the aggregate and the companion roll. The rolls were set as close together as possible but to no avail. It was found that by welding beads parallel to the axis of rotation on the smooth roll, gradation was improved and production increased.

(c) RECOMMENDATION. That hard surface beads be welded onto the smooth rolls of rock crushers when greater productivity and quality gradation are required.

c. Training. None

d. Intelligence. None

e. Logistics.

(1) Front Loader Frame Crack.

(a) OBSERVATION. The main frame on the Hough Model, H90 CM front loader commonly cracks behind the front axle mounting plate.

(b) EVALUATION. This cracking has occurred on 11 of the 12 battalion front loaders of the above type. Corrective action involved cutting off the old plate, welding the crack and replacing the old plate with a larger one. The new plate is 15/16" thick and three inches longer than the old one. To insure hole alignment, bolt the mounting plate to the front axle before tack welding the plate to the main frame. The problem has not occurred since this modification.

(c) RECOMMENDATION. That an MWO on this front loader be published requiring the above modification; however, dimensions should be verified by the appropriate engineering test agency and that the MWO be applied prior to issue of equipment to user. (An Equipment Improvement Recommendation has been submitted).

(2) Plate Bearing Test Equipment

(a) OBSERVATION. Recent airfield construction operations required the performance of plate bearing tests on the subgrade and base coarse structures prior to placing of concrete pavement.

(b) EVALUATION. This type of test equipment is not authorized an engineer construction battalion. Testing must be accomplished by contract with civilian firms. This service cannot always respond to user requirements due to prior commitments or transportation difficulties.

(c) RECOMMENDATION. That plate bearing test equipment be issued as a TOE item to engineer construction battalions.

(3) Repair Parts For Asphalt Plant

(a) OBSERVATION. Repair parts for the asphalt plant cannot be obtained through normal supply channels.

(b) EVALUATION. Lack of repair parts for the asphalt plant has resulted in much time being lost in fabricating or adapting other parts to fit the plant. This not only has burdened our heavily committed maintenance personnel but has also limited plant production. Requisitions for repair parts for the asphalt plant were returned from depot marked "Procure by local purchase".

(c) RECOMMENDATION. That an ASL load of repair parts be issued to the unit with the equipment or be available in supply channels for subsequent issue to users.

(4) Clutch Interchangeability (Truck & Grader)

(a) OBSERVATION. The clutch for a WABCO, 440H motor grader is interchangeable with that of a 5 ton multi-fuel truck.

(b) EVALUATION. Three WABCO 440H motor graders were received minus appropriate repair parts manuals. Consequently, repair parts must be obtained from sources other than normal supply channels until a listing of FSNs or manufacturer's parts numbers can be obtained for the repair parts. While attempting to repair an inoperative clutch on this grader, it was discovered that the 5-ton multi-fuel throwout bearing (FSN 3110-186-5037) and carrier (FSN 2520-737-6156) were suitable substitutes for those in the grader. The 5-ton truck clutch disk (FSN 2520-097-3197) could be made to work in the grader by interchangin the hubs. This successfully applied expedient has proven to be satisfactory in operation.

(c) RECOMMENDATION. That appropriate repair parts manuals and at least a 45 day level of repair parts accompany or precede issue of new type equipment in the command. This gives the user and the supply channels an opportunity to insure rapid and correct repair when routine repair parts are required.

(5) Marshall Stability Test Equipment

(a) OBSERVATION. This battalion has recently had to design a high quality paving mix for use in its paving operations on QL-19.

(b) EVALUATION. The necessary equipment for performing the mix design is not authorized an engineer construction battalion or group. Compaction hammer and molds were fabricated in the battalion machine shop. This diverted valuable machine shop hours from the maintenance effort. Additionally a Marshall Stability Test device was not available through military channels. Our test samples had to be taken to the RMK Labs for testing and this resulted in loss of valuable design time.

(c) RECOMMENDATION. That Marshall Stability Test equipment be authorized TOE items to engineer construction battalions and to those units possessing asphalt plants.

(6) Asphalt Plant & Rock Crusher Incompatibility

(a) OBSERVATION. Several battalions in Vietnam have been authorized asphalt plants capable of producing 150 TPH of asphaltic concrete. Present engineer construction battalions TOE authorizes the 75 TPH rock crusher.

(b) EVALUATION. Our present asphaltic pavement mix calls for 1"(-) coarse aggregate and NO. 8(-) fine aggregate. The utilization of the full production capability of the asphalt plant requires a crushing capability of 63 TPH for the coarse aggregate and 77 TPH for the fine aggregate. The 75 TPH crushing and screening plant now authorized and in use has a maximum 68 TPH coarse aggregate output and 22 TPH fine aggregate output. It can be readily seen that if asphalt plant aggregate were crushed alone, the 75 TPH plant would not be compatible with the 150 TPH asphalt plant. Further, requirements exist for other types of crushed aggregate in addition to that required for the asphalt plant.

(c) RECOMMENDATION. That when authorized a high aggregate consumption piece of machinery such as an asphalt plant or a concrete batching plant, a compatible set of crushing equipment such as the 225 TPH crushing and screening plant should also be authorized. This plant has special "fines-making" capability that does not exist with the 75 TPH crushing and screening plant.

(7) TOE Equipment Shortages

(a) OBSERVATION. The battalion productive output is limited due to insufficient TOE equipment.

(b) EVALUATION. The battalion deployed less all six of its authorized water distributors and five of its seven authorized pneumatic tool and compressor outfits. Only one of six water distributors and one compressor outfit has been received after one year in country. Five ton tractors are now a critical equipment shortage (short 9 of 29 authorized, auth 3-5T tractors and 26-10T tractors - issued 5T in lieu of 10T). This shortage was created through normal score out and redistribution of higher command tractor assets. No project date for the delivery of the above shortages has been received. The 51st Engineer Platoon (Asphalt) now has an operational asphalt plant; however, they remain short one 9-14 ton roller and one paving machine. The 23rd Engineer Detachment (well drilling) remains without its well drilling rig. The projected date for the delivery of the rig remains 31 July 1968 or 10 months after the unit arrived in country.

(c) RECOMMENDATION. That engineer units, especially elements, not be deployed with TOE shortages, or if deployed, deployed with some reasonable equipment receipt date and that strong procurement and supply action be taken to equip units with their authorized TOE equipment.

(8) Medicinal Supplies

(a) OBSERVATION. Medicinal supplies should be requisitioned in a quantity commensurate with forecasted Medical Civic Action Program (MEDCAP) demand by unit surgeon.

(b) EVALUATION. Twenty Vietnamese personnel are presently being treated for pulmonary tuberculosis by the battalion surgeon under MEDCAP. This treatment includes 40 ampoules of streptomycin each week. The servicing US Depot had only approximately 200 ampoules for its entire area of responsibility. This drug, as are others, is quite scarce at Vietnamese government sponsored dispensaries. Although these dispensary personnel are encourage to order drugs through their own supply channels, they often fail to do so because of inefficiency and apathy. Drugs are supplied from U.S. sources when Vietnamese supplies are inadequate. US Depot stocks are low due to insufficient demands for medicines which are used to treat sicknesses commonly found among the Vietnamese.

(c) RECOMMENDATION. That accurate forecasting and requisitioning of supplies by careful evaluation of existing circumstances be made to insure timely availability of appropriate medicines in required quantities.

EGD-BC-CO 15 May 1968
SUBJECT: Operational Report Of 589th Engineer Battalion (Construction), For Period Ending 30 April 1968, (RCS CSFOR-65(R1)

(9) Cracked Hydraulic Lines On D-7E Tractors

(a) OBSERVATION. Loose hydraulic control valve mounting bolts on the D-7E caterpillar tractor causes cracking of the attached hydraulic lines.

(b) EVALUATION. The above tractors were frequently deadlined due to the hydraulic lines cracking. This problem was caused by loose hydraulic control valve mounting bolts. This condition has been virtually eliminated by making the tightening of these bolts a part of daily operator's maintenance.

(c) RECOMMENDATION. That some self-binding device or method of installation of the mounting bolts be instituted on future models of this piece of equipment.

f. Organization. None

g. Other. None

Allen F. Grum

2 Incl
1. Organizational Structure
2. Crusher Rolls

ALLEN F. GRUM
LTC, CE
Commanding

EGA-3 (15 May 1968) 1st Ind Maj Pierce/fgg/2003
SUBJECT: Operational Report - Lessons Learned (RCS-CSFOR-65)(R-1) for Quarterly Period ending 30 April 1968.

DA, Headquarters, 35th Engineer Group (Const), APO 96238, 22 May 1968

TO: Commanding General, 18th Engineer Brigade, Attn: AVEC-C, APO 96377

1. The Operational Report - Lessons Learned submitted by the 589th Engineer Battalion (Const) has been reviewed by this headquarters and is considered an excellent summary of the Battalion's operations during the reporting period ending 30 April 1968.

2. The remarks of the Battalion Commander are concurred in with the following comment reference Section 2, Part e., Items 2 and 5. The Operational Report - Lessons Learned submitted by this headquarters for the quarterly period ending 31 January 1968 contained an observation that the 35th Engineer Group's current mission requires at least one Marshall test apparatus for the design and control of plant mix hot asphaltic concrete. The addition of plate bearing test equipment as a TOE item to engineer construction battalions and Marshall Stability test apparatus to those units possessing asphalt plants would greatly improve inherent testing capabilities of these units.

JOHN A. HUGHES
Colonel, CE
Commanding

11 JUN 1968 22

AVBC-C (15 May 68) 2nd Ind
SUBJECT: Operational Report of the 589th Engineer Battalion (Construction) for the Period Ending 30 April 1968, RCS CSFOR-65 (R1)

DA, Headquarters, 18th Engineer Brigade, APO 96377

TO: Commanding General, U.S. Army Vietnam, ATTN: AVHGC-DST, APO 96375

1. This headquarters has reviewed the Operational Report - Lessons Learned for the 589th Engineer Battalion (Const) for the quarterly period ending 30 April 1968. The report is considered to be an excellent account of the Battalion's activities for the reporting period.

2. This headquarters concurs with the observations and recommendations of the Battalion and Group Commanders with the following comments added:

a. Reference paragraph 2e(2). The equipment necessary to perform the plate bearing test can be fabricated using the drawing on page 206 of Student Reference S.002, Soils Engineering, Sect I, Vol I, US Army Engineer School. Though current MTOE action does not provide for the addition of plate bearing test equipment to the engineer construction battalion, it will be considered for inclusion in the next MTOE action.

b. Reference paragraph 2e(5). Marshall Stability Test Equipment has been included in the class IV equipment pools for use on an as needed basis. It is anticipated that authorization for the establishment of class IV equipment pools will be forthcoming in mid-summer 1968.

c. Reference paragraph 2e(6). The conclusion that the available asphalt and crushing equipment is incompatible is strongly concurred with by this headquarters. This is supported by actual production data for the four asphalt plants currently operated by the 18th Engineer Brigade. Action to alleviate this situation and procure the more compatible 225 TPH crushers has been initiated by this headquarters.

d. Reference paragraph 2e(7). None of the items mentioned in referenced paragraph appeared on the latest bi-monthly Periodic Logistics Report. The 589th Engineer Battalion (Const) has been advised of the provisions of USARV Reg 700-6 which establishes a procedure for bringing critical item shortages to the attention of commanders for further action.

Douglas K. Blue
DOUGLAS K. BLUE
Colonel, CE
Deputy Commander

22

AVHGC-DST (15 May 68) 3d Ind CPT Arnold/ms/LBN 4485
SUBJECT: Operational Report of 589th Engineer Battalion (Construction), For Period Ending 30 April 1968 (RCS CSFOR-65(R1)

HEADQUARTERS, US ARMY VIETNAM, APO San Francisco 96375 2 JUL 1968

TO: Commander in Chief, United States Army, Pacific, ATTN: GPOP-DT, APO 96558

1. This headquarters has reviewed the Operational Report-Lessons Learned for the quarterly period ending 30 April 1968 from Headquarters, 589th Engineer Battalion (Const).

2. Comments follow:

a. Reference item concerning repair parts for asphalt plants, page 15, paragraph 2e(3): Nonconcur. Repair parts should have been placed on a purchase order as directed by depot. In addition, reference is made to 1st Logistical Command Regulation 700-17, dated 24 December 1967, with Change 1, dated 2 February 1968, and message, Headquarters, 1st Logistical Command, unclassified AVCA-GL-C 028613, dated 260443Z March 1968, subject: Manufacturers' Part Number. Reference regulation sets the procedure of requisitioning repair parts by manufacturers' code and part number. This regulation particularly stresses the recording of demand data so the repair parts can be included in the ASL at the earliest possible date. Referenced message directs 1st Logistical Command DSU's to process all requisitions with manufacturers' code and part number only, and to add those demand supported repair parts to their ASL.

b. Reference item concerning clutch interchangeability (truck and grader), page 15, paragraph 2e(4). Concur as a field expedient only. The splined hub is originally riveted to the clutch plate and interchange must be bolted, which has the inherent risk of becoming loose. Thus, the "as a field expedient only". Copies of the manufacturers' repair parts manual for the LeTourneau-Westinghouse 440H grader were sent to each Engineer Group for further distribution on 15 April 1968.

c. Reference item concerning cracked hydraulic lines on D7E tractors, page 18, paragraph 2e(9): Nonconcur. Hydraulic lines are breaking due to vibration. M.W.O. 5-2410-214-30/1 contains a plate to reinforce the control valve and eliminate the vibration. Part nomenclature and number is Scrapper Valve Reinforcement, (11083) 3R7005. FSN is 2410-B00-0360.

FOR THE COMMANDER:

JOHN V. GETCHELL
Captain, AGC
Assistant Adjutant General

Copies furnished:
HQ, 589th Engr Bn (Const)
HQ, 18th Engr Bde

GPOP-DT (15 May 68) 4th Ind

24

SUBJECT: Operational Report of HQ, 589th Engr Bn (Const) for Period Ending 30 April 1968, RCS CSFOR-65 (R1)

HQ, US Army, Pacific, APO San Francisco 96558 19 JUL 1968

TO: Assistant Chief of Staff for Force Development, Department of the Army, Washington, D. C. 20310

This headquarters has evaluated subject report and forwarding indorsements and concurs in the report as indorsed.

FOR THE COMMANDER IN CHIEF:

K. F. OSBOURN
MAJ. AGC
Asst AG

25 EGD-BC-CO 15 May 1968

SUBJECT: Operational Report Of 589th Engineer Battalion (Construction), For Period Ending 30 April 1968 (RCS CSFOR-65(R1)

ORGANIZATION

1. The following organic, and attached units comprise the 589th Engineer Battalion (Construction) under TOE 5-115-E.

a. Headquarters/Headquarters Company

b. Company A, 589th Engineer Battalion (Construction), APO 96238

c. Company B, 589th Engineer Battalion (Construction), APO 96262

d. Company C, 589th Engineer Battalion (Construction), APO 96238

e. Company D, 589th Engineer Battalion (Construction), APO 96294

f. 51st Engineer Platoon (Asphalt)(Attached)

g. 23rd Well Drilling Detachment (Attached)

h. 511th Engineer Company (Panel Bridge)(detached)

2. A provisional Power Distribution Team composed of personnel from within 589th Engineer Battalion and 35th Engineer Group sources was formed to complete the conversion of power from local individual generators to a central power source at Camp Radcliff, Vietnam. The strength of this team has fluctuated between 16 and 26 personnel since 1 February 1968. It was detached from Co B (589th) on 8 April 1968 and attached to Co C (589th).

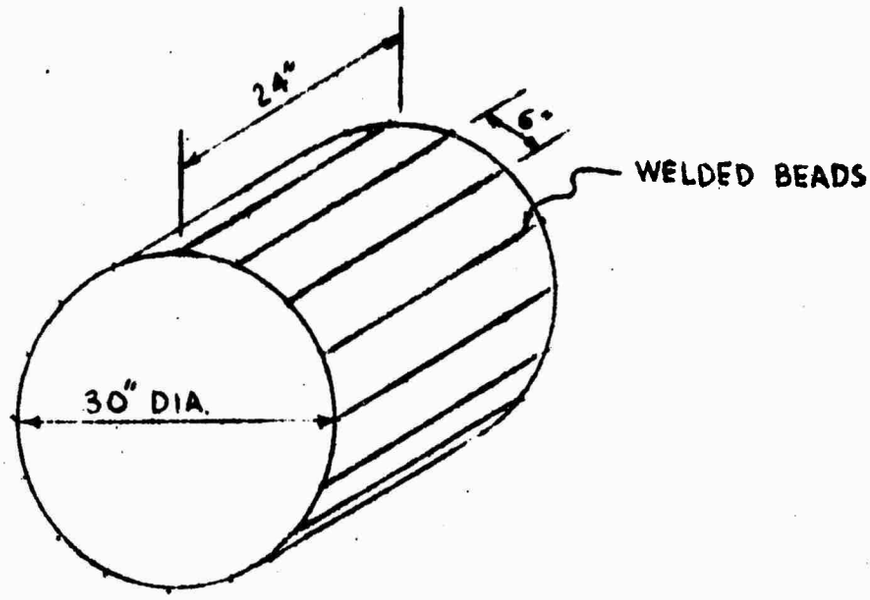

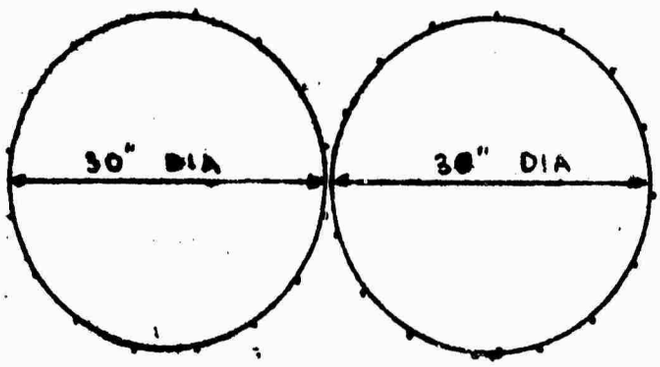

CRUSHER ROLLS

(FOR 1/4 (-) AGGREGATE)

Incl 2

27

Security Classification

DOCUMENT CONTROL DATA - R & D

(Security classification of title, body of abstract and indexing annotation must be entered when the overall report is classified)

1. ORIGINATING ACTIVITY *(Corporate author)* OACSFOR, DA, Washington, D.C. 20310	2a. REPORT SECURITY CLASSIFICATION For Official Use Only 2b. GROUP 4

3. REPORT TITLE

Operational Report - Lessons Learned, Headquarters, 589th Engineer Battalion (Const)

4. DESCRIPTIVE NOTES *(Type of report and inclusive dates)*

Experiences of unit engaged in counterinsurgency operations. 1 Feb - 30 Apr 1968

5. AUTHOR(S) *(First name, middle initial, last name)*

CO, 589th Engineer Battalion (Const)

6. REPORT DATE 15 May 1968	7a. TOTAL NO. OF PAGES 25	7b. NO. OF REFS
8a. CONTRACT OR GRANT NO. b. PROJECT NO. N/A c. d.	9a. ORIGINATOR'S REPORT NUMBER(S) 682193 9b. OTHER REPORT NO(S) *(Any other numbers that may be assigned this report)*	

10. DISTRIBUTION STATEMENT

11. SUPPLEMENTARY NOTES N/A	12. SPONSORING MILITARY ACTIVITY OACSFOR, DA, Washington, D.C. 20310

13. ABSTRACT

25

DD FORM 1 NOV 65 1473

UNCLASSIFIED
Security Classification

29 The following items are recommended for inclusion in the Lessons Learned Index:

ITEM 1

* SUBJECT TITLE _____

** FOR OT RD # _____

***PAGE # _____

ITEM 2

SUBJECT TITLE _____

FOR OT RD # _____

PAGE # _____

ITEM 3

SUBJECT TITLE _____

FOR OT RD # _____

PAGE # _____

ITEM 4

SUBJECT TITLE _____

FOR OT RD # _____

PAGE # _____

ITEM 5

SUBJECT TITLE _____

FOR OT RD # _____

PAGE # _____

* Subject Title: A short (one sentence or phrase) description of the item of interest.

** FOR OT RD # : Appears in the Reply Reference line of the Letter of Transmittal. This number must be accurately stated.

***Page # : That page on which the item of interest is located.

30

- - - - - - - - - - FOLD - - - - -

DEPARTMENT OF THE ARMY

OACSFOR
Washington, D.C. 20310

POSTAGE AND FEES PAID
DEPARTMENT OF THE ARMY

STAPLE

OFFICIAL BUSINESS

Office of the Assistant Chief of Staff for Force Development
ATTN: Operational Reports Branch
Headquarters, Department of the Army
Washington, D.C. 20310

STAPLE

DA Label 18, 1 Apr 59 PREVIOUS EDITIONS OF THIS LABEL ARE OBSOLETE.

16—70643-1

- - - - - - - - - - FOLD - - - - -