THIS REPORT HAS BEEN DELIMITED
AND CLEARED FOR PUBLIC RELEASE
UNDER DOD DIRECTIVE 5200.20 AND
NO RESTRICTIONS ARE IMPOSED UPON
ITS USE AND DISCLOSURE.

DISTRIBUTION STATEMENT A

APPROVED FOR PUBLIC RELEASE;
DISTRIBUTION UNLIMITED.

AD839176

DEPARTMENT OF THE ARMY
OFFICE OF THE ADJUTANT GENERAL
WASHINGTON, D.C. 20310

IN REPLY REFER TO

AGAM-P (M) (5 Aug 68) FOR OT RD 682265 15 August 1968

SUBJECT: Operational Report - Lessons Learned, Headquarters, 45th Engineer Group (Const), Period Ending 30 April 1968 (U) (CORRECTED COPY)

SEE DISTRIBUTION

1. Subject report is forwarded for review and evaluation in accordance with paragraph 5b, AR 525-15. Evaluations and corrective actions should be reported to ACSFOR OT RD, Operational Reports Branch, within 90 days of receipt of covering letter.

2. Information contained in this report is provided to insure that the Army realizes current benefits from lessons learned during recent operations.

3. To insure that the information provided through the Lessons Learned Program is readily available on a continuous basis, a cumulative Lessons Learned Index containing alphabetical listings of items appearing in the reports is compiled and distributed periodically. Recipients of the attached report are encouraged to recommend items from it for inclusion in the Index by completing and returning the self-addressed form provided at the end of this report.

BY ORDER OF THE SECRETARY OF THE ARMY:

Kenneth G. Wickham

KENNETH G. WICKHAM
Major General, USA
The Adjutant General

1 Incl
as

DISTRIBUTION:
Commanding Generals
US Continental Army Command
US Army Combat Developments Command
Commandants
US Army Command and General Staff College
US Army Engineer School
US Army Special Warfare School

DDC
SEP 10 1968
D

This document is subject to special export controls and each transmittal to foreign governments or foreign nationals may be made only with prior approval of ACSFOR OT RD, WASH DC 20310

STATEMENT #2 UNCLASSIFIED

Protective marking cancelled when separated from inclosure.

25

CORRECTED COPY
DEPARTMENT OF THE ARMY
HEADQUARTERS 45TH ENGINEER GROUP (CONSTRUCTION)
APO 96337

EGD-3 30 April 1968

SUBJECT: Operational Report of the 45th Engineer Group (Const) for Period Ending 30 April 1968, RCS CSFOR-65 (RI)

THRU: Commanding General
18th Engineer Brigade
APO 96377

Commanding General
United States Army, Vietnam
ATTN: AVHGC
APO 96375

Commander in Chief
United States Army, Pacific
ATTN: GPOP-DT
APO 96558

TO: Assistant Chief of Staff for Force Development
Department of the Army (ACSFOR DA)
Washington, D.C. 20310

Section 1, Operations: Significant Activities

1. Command:

a. During the reporting period, Colonel George B. Fink commanded the 45th Engineer Group (Construction).

b. During the entire period, the 45th Engr. Gp. remained assigned to the 18th Engr. Bde. Effective 15 March 1968, the 45th Engr. Gp. was placed in general support of III MAF.

c. The following units, with commanders as stated, were reassigned to the 35th Engineer Group (Construction) effective 15 March

FOR OT RD
682265

CORRECTED COPY

EOD-3 30 April 1968
SUBJECT: Operational Report of the 45th Engineer Group (Const) for Period Ending 30 April 1968, RCS CSFOR-65 (RI)

1968, by authority of 18th Engineer Brigade G.O. 172, dated 9 March 1968:

(1) 589th Engineer Battalion (Construction), commanded by LTC Allen F. Grum.

(2) 84th Engineer Battalion (Construction), commanded by LTC Ralph T. Garver. LTC James F. Fraser relinquished command on 1 March 1968.

(3) 19th Engineer Battalion (Combat), commanded by LTC James L. Sutton. LTC Andrew Remson relinquished command on 4 March 1968.

(4) 73rd Engineer Company (Construction Support), commanded by Cpt. Sidney G. Smith Jr.

(5) 137th Engineer Company (Light Equipment), commanded by Cpt. Joseph Bogden.

(6) 513th Engineer Company (Dump Truck), commanded by Cpt. Thomas M. Beall.

(7) 523rd Engineer Company (Port Construction), commanded by Cpt. Alton A. Clark.

(8) 51st Asphalt Platoon, commanded by 1Lt. Robert P. Grant.

(9) 444th Concrete Detachment (HO), commanded by 1Lt. Larry Booth.

(10) 23rd Engineer Detachment (Well Drilling).

d. The following units, with commanders as stated, remained assigned to the 45th Engineer Group:

(1) 35th Engineer Battalion (Combat), commanded by LTC John V. Parish.

(2) 39th Engineer Battalion (Combat), commanded by LTC James M. Miller.

(3) 511th Engineer Company (Panel Bridge), commanded by 1Lt. Donald D. Martin. Cpt Thomas T. Takayama relinguished command on 7 April 1968. This company was attached to the 35th Engr. Bn., effective 15 Feb. 1968 by 45th Engr. Gp. G.O. 8, dated 15 Feb. 1968.

EGD-3 30 April 1968
SUBJECT: Operational Report of the 45th Engineer Group (Const) for Period Ending 30 April 1968, RCS CSFOR-65 (RI)

(4) 517th Engineer Company (Light Equipment), commanded by Cpt. David R. Heying. This company remained attached to the 35th Engineer Battalion.

e. The following units, with commanders as stated, were assigned to the 45th Engineer Group during this period:

(1) 27th Engineer Battalion (Combat), commanded by LTC Kent C. Kelly. Unit was assigned to the 45th Engineer Group effective 5 April 1968, by 18th Engineer Brigade G.O. 238, dated 2 April 1968. In the same G.O., D Company, 27th Engr. Bn. was attached to the 35th Engr. Gp. (Const), effective 5 April 1968. The 27th Engr. Bn., the same day of assignment to this HQ (5 April 1968), was attached (less D Company) for operational control to the 20th Engr. Bde., by 18th Engr Bde. G. O. 289, dated 9 April 1968. Effective 12 April 1968 the unit was released from this attachment by 18th Engr. Bde. G.O. 305, dated 15 April 1968.

(2) 14th Engineer Battalion (Combat), commanded by LTC Bennett L. Lewis. Unit was assigned to the 45th Engr. Gp. effective 22 March 1968, by 18th Engr. Bde. G.O. 219, dated 23 March 1968, as amended by 18th Engr. Bde. G.O. 223, dated 25 March 1968.

(3) 591st Engineer Company (Light Equipment), commanded by Cpt. Kenneth J. Havemen. Unit was assigned to the 45th Engr. Gp. effective 5 April 1968, attached the same day to the 20th Engr. Bde. for operational control, and released from this attachment on 12 April 1968. These actions were authorized by the same general orders pertaining to the 27th Engr. Bn. The 591st Engr. Co. (LE) was attached to the 27th Engr. Bn. effective 12 April 1968, by 45th Engr. Gp. G.O. 15, dated 26 April 1968.

(4) 171st Engineer Detachment (Well Drilling). Unit was assigned to the 45th Engr. Gp. effective 22 March 1968, by 18th Engr. Bde. G.O. 219, dated 23 March 1968, as amended by 18th Engr. Bde. G.O. 223, dated 25 March 1968. The 171st Engr. Det. (WD) was attached to the 14th Engr. Bn. effective 22 March 1968 by 45th Engr. Gp. G.O. 15, dated 26 April 1968.

f. The following units were attached to the 45th Engineer Group during this period:

(1) Earthmoving Platoon, Company D, 84th Engineer Battalion. Platoon was attached to 45th Engr. Gp. for operational control, rations and quarters, effective 18 March 1968, by 18th Engr. Bde. G.O.

344, dated 26 April 1968. Platoon was further attached to the 39th Engr. Bn. effective 18 March 1968 by 45th Engr. Gp. G.O. 10, dated 12 March 1968.

(2) Earthmoving Platoon, C Company, 589th Engineer Battalion. Platoon was attached to 45th Engr. Gp. effective 20 March 1968 by 18th Engr. Bde. G.O. 344, dated 26 April 1968. Platoon was further attached to the 14th Engr. Bn. effective 20 March 1968 by 45th Engr. Gp. G.O. 11, dated 14 March 1968.

g. Inclosure 1 is an organizational chart reflecting assigned and attached units as of 30 April 1968.

2. Personnel, Administration, Morale, Discipline:

Personnel strength remained close to authorized levels throughout the reporting period. The only serious shortage continued to be Corps of Engineer captains. At the close of this period, the 45th Engr. Gp. is short 15. Another significant observation during this period is that of 105 lieutenants assigned to the Group, none are Regular Army, and only a few are ROTC graduates. As a result of the enemy's Tet Offensive and increased enemy contact in the new area of operations, 45th Engr. Gp. suffered unusually heavy casualties during this period. Ten men were killed in action and ninety-nine were wounded in action. Morale and discipline, normally high, increased upon relocation to I CTZ, primarily the result of the important priority missions assigned.

3. Intelligence and Counterintelligence

a. Summary of Incidents:

	Feb.	Mar.	Apr.
Mining Incidents	25	27	56
Mortar/Rocket Attacks	5	5	6
Booby Traps	10	8	4
Sniper Fire	35	3	10
Bridges-Damaged/Destroyed	1	2	2
Culverts Destroyed	18	4	2

b. The exceptionally high rate of incidents for the first month of the quarter resulted in large part from thirtyone incidents of sniper fire and eighteen culverts being destroyed in the 19th Battalion's AOR. The 19th, 589th, and 84th Battalions were lost to the 35th Group during the month of March which accounts for the decrease in enemy initiated incidents during that month. Two additional combat battalions

EGD-3 30 April 1968
SUBJECT: Operational Report of the 45th Engineer Group (Const) for Period Ending 30 April 1968, RCS CSFOR-65 (RI)

were assigned to the 45th Group during late March and mid-April and began operations in northern I Corps. Being located in particularly active areas, both battalions experienced significant enemy resistance mostly in the form of anti-vehicular type mines. The 35th Battalion, operating in and north of the Hai Van Pass, experienced 22 mining incidents during the month of April. The 14th Battalion, operating in eastern Quang Tri Province, experienced 25 mining incidents during the last month of the quarter.

4. Plans, Operations and Training:

a. Area of Responsibility. During the period 1 February 1968 to 15 March 1968 the 45th Engr. Gp. was responsible for all non-divisional engineer operational support and construction in that portion of the Republic of Vietnam bounded on the east by the South China Sea; on the north by the northern boundary of Binh Dinh Province, on the west by the western boundaries of Binh Dinh and Phu Yen Provinces; and on the south by a line running from the South China Sea at CQ150730 west to BQ930695 and then west to BQ735695 on the Phu Yen Province boundary. During this period, the Group was also responsible, on a task basis, for the reconstruction of Highway QL-1 from the I/II CTZ boundary to Chu Lai. Effective 15 March 1968 45th Engr. Gp. was relieved of all responsibilities in II CTZ, being replaced by the 35th Engr. Gp. The new area of operations includes all of I Corps Tactical Zone with specific areas of responsibility or missions assigned by III Marine Amphibious Force.

b. Mission:

(1) From 1 February 1968 to 15 March 1968 principle missions were as follows:

(a) Operational support to allied forces within our area of responsibility.

(b) Within area of responsibility, the upgrading to MACV standards and maintenance of Highways QL-1 and QL-19 as well as the limited upgrading of routes 6B, 3A and other secondary roads to support military traffic.

(c) The construction of directed MCA funded projects including port, depot, POL, cantonment and airfield facilities.

(2) From 15 March 1968 to the present, the mission has been to provide non-divisional engineer support in I Corps Tactical Zone in general support of III Marine Amphibious Force. In addition to numerous operational support missions to allied forces in I Corps

EGD-3 30 April 1968
SUBJECT: Operational Report of the 45th Engineer Group (Const) for Period Ending 30 April 1968, RCS CSFOR-65 (RI)

Tactical Zone, specific missions to date include the following:

(a) Open and upgrade to class 50, two lane, all weather, highway QL-1 from the Nemo Bridge (AT927843) to Phu Loc (ZD085007).

(b) Develop logistical support capability at Wunder Beach (YD 495565) and upgrade the Hai Lang Road connecting Wunder Beach and QL-1 to a two lane, limited weather capability.

(c) Construct road connecting Camp Eagle (YD8016) with Route 547, upgrade Route 547 west of the Perfume River, and clear Route 547 of trees and brush up to 200 meters from each side, west to LZ Bastogne (YD621091).

(d) Upgrade to class 50, two lane, all weather, highway QL-1 from Mo Duc to Chu Lai.

c. Summary of Activities and Accomplishments:

(1) Period 1 February 1968 to 15 March 1968:

(a) 45th Engineer Group units provided operational support to allied forces within the northern portion of II CTZ and the southern portion of I Corps Tactical Zone. Supported units include the 1st Cavalry Division (Airmobile), the Americal Division, the 1st ROKA (Capital) Division, the 22nd ARVN Division, the 3rd Bde/4th Inf Division, the 173rd Airborne Bde, IFFV artillery units, USARV aviation and signal units, and U.S. Army Support Command, Qui Nhon. Effective 10 February 1968 the 35th Engr. Bn. was placed in General Support of III MAF, a status which terminated 15 March 1968 when the 45th Engr. Gp. was placed in General Support of III MAF. See paragraph 4d (1)(b) for a summary of their activities.

POSTED 10 JUNE SEE ENCL 2 QL

(b) Coincident with the transfer of the 45th Engr. Gp. to I Corp Tactical Zone was the virtual completion of the major construction program undertaken by the Group upon its assignment to the northeastern portion of II CTZ in November 1966. The most notable achievement was the development of a vast transportation system. The opening and upgrading of Highways QL-1 and QL-19 was a major achievement. Upon transfer of the 45th Engr. Gp., within area of responsibility, QL-19 was a two lane, class 50, all-weather road, paved 43 miles west to An Khe. Shortly after the transfer of the 45th Engr. Gp., the asphalt plant operated by the 589th Engr. Bn. at An Khe began full production and the paving west to the Mang Giang Pass was begun. QL-1 was a two lane, class 50, all-weather road from Phu Tai, just south of Qui Nhon, to the I,II CTZ border, paved from Phu Tai to Phu My, a distance of 40

EOD-3 30 April 1968
SUBJECT: Operational Report of the 45th Engineer Group (Const) for Period Ending 30 April 1968, RCS CSFOR-65 (RI)

miles. RMK with Group assistance was paving north toward Bong Son, and troop paving from Bong Son north to Duc Pho was scheduled to begin upon receipt of the few remaining components to the asphalt plant at Tam Quan. From the I, II DTZ border north to the Song Ve River, the upgrading of QL-1 to class 50, two lane, all weather, was approaching completion. The upgrading of QL-1 south from Phu Tai had begun, with the widening of the Cu Mong Pass approximately half completed. The other major undertaking of the 45th Engr. Gp., the development of a vast logistical system, was also approaching completion. This logistical system, primarily the achievement of the 45th Engr. Gp., included the deep water port of Qui Nhon, the shallow draft port of Sa Huynh, the major depots of Qui Nhon, Long My and Cha Rang, the POL system including three tank farms and extensive pipeline, the ammunition storage areas at Phu Tai, Qui Nhon and Duc Pho, and the airfield and heliport facilities at Qui Nhon, An Khe, Lane AAF, and elsewhere throughout the Group's area of responsibility.

(2) On 15 February 1968, an advance element of HHC, 45th Engr. Gp., departed Qui Nhon enroute Da Nang. The main body of HHC, 45th Engr. Gp., began its departure from Qui Nhon enroute Da Nang on 15 March 1968.

(3) Period 15 March 1968 to 30 April 1968. During this period, the 45th Engr. Gp. completed its consolidation in I CTZ and made significant progress on assigned missions. 45th Engr. Gp. units provided operational support to the following major units: the 3rd Marine Div., the 1st Cav. Div. (Airmobile), the 101st Airborne Div., 1st Marine Div., the Americal Division, and the US Army Support Command, Da Nang. Particularly notable achievements during this period include the rapid reopening of the critical Hai Van Pass on QL-1 to traffic, the significant upgrading and widening of this pass, and the rapid construction of the logistical facilities at Wunder Beach (Thon My Tuy), including the upgrading of the Hai Lang Road, the supply route to this vital port and storage installation.

d. Major Activities of Subordinate Units.

(1) Period 1 February 1968 to 15 March 1968.

(a) 19th Engr. Bn. (C) with attachments (73rd Engr. Co. (CS) and 137th Engr Co (LE)). Primary activities continued to be the upgrading of Hwy. QL-1 from Bong Son to Mo Duc, and operational support to elements of the 1st Cavalry Division (Airmobile), which were later relieved by the 3rd Bde, 4th Inf Div., and to the Americal Division. Operational support included daily minesweep of QL-1, major

EGD-3 30 April 1968
SUBJECT: Operational Report of the 45th Engineer Group (Const) for Period Ending 30 April 1968, RCS CSFOR-65 (RI)

repairs to English Airfield, the construction of an access road to an artillery unit near Duc Pho, the completion of the Sa Huynh Port, and the completion of the Duc Pho ASP. The upgrading of QL-1 continued at a rapid pace, with most effort between Tam Quan and Mo Duc. Using crushed rock from the Tam Quan Quarry, in operation since 11 January 1968, the laydown of base course was a major activity. The asphalt plant at Tam Quan remained inoperative due to missing components.

(b) 35th Engr. Bn. (C) with attachments (517th Engr. Co.(LE) and the 511th Engr. Co. (PB)). Units were alerted to deploy to I CTZ on 2 February 1968. On 11 February the 35th Engr. Bn. was relieved of its responsibilities for minesweep, LOC restoration and maintenance, and operational support to the 1st Cav. Div. (Airmobile), these being assumed by the 84th Engr. Bn. (Const). First elements departed by LST for Da Nang on 10 February 1968. Transport continued by LST and Sea Train with the last element arriving at final destination on 19 Feb. Battalion CP was established on 13 Feb. at AT926846. Their mission was to open, repair, and upgrade to class 50, two lane, all weather, QL-1 from the Namo bridge (AT927843) to Phu Loc (ZD085007). This stretch of road had been closed due to enemy activity since the start of the Tet Offensive. On 25 Feb. the tactical situation permitted A and B companies to convoy to AT874989, where they established their base camps. On 1 March 1968, the first supply convoy in approximately two months went from Da Nang to Phu Bai. From 1 March to 15 March primary efforts were made to widen critical points in the pass and replace substandard bridges and culverts.

(c) 39th Engr. Bn. (C). Major activities continued to be operational support to the Americal Division and the restoration and maintenance of QL-1 from Mo Duc to Chu Lai. Operational support included the following: Daily minesweep of QL-1 from Mo Duc to the Song Ve River, from Quang Ngai to Chu Lai, and Route 535 west to LZ Ross; the upgrading and maintenance of route 535; and the major construction of aircraft revetments at Chu Lai. Significant progress was made in the upgrading of QL-1 from Mo Duc to the Song Ve River, with the approaching completion of bridges and culverts in that stretch. Progress continued on QL-1 from Quang Ngai to Binh Son.

(d) 84th Engr. Bn. (Const) with the 513th Eng. Co. (DT) attached. Primary activity continued to be the completion of logistical facilities in the Qui Nhon area and the widening and upgrading of the Cu Mong Pass, south of Qui Nhon. Considerable effort was devoted to security as a result of the Tet Offensive. Beginning 7 Feb. 1968 two companies were assigned to an area security role; one was released on 10 Feb., and the other on 29 February 1968. Work was performed during

EGD-3 30 April 1968
SUBJECT: Operational Report of the 45th Engineer Group (Const) for Period Ending 30 April 1968, RCS CSFOR-65 (RI)

this period on the following projects, all of which were in the final stages of completion: The Long My Logistical Depot, the Port Intransit Storage Area, the Qui Nhon Medical Depot, and the Port Maintenance Building. Projects completed during this period include the Phu Tai ASP and 22 aircraft revetments at Qui Nhon Airfield. Effective 11 February, the 84th Engr. Bn. assumed the responsibilities of the departing 35th Engr. Bn. (see para 4d(1)(b)).

(e) 589th Engr. Bn. (Const) with attachments (51st Asphalt Platoon, 444th Concrete Det. (HO) and the 23d Engr. Det. (WD)). Major activities continued to be operational support to the 1st Cav. Div. (Airmobile) and the 173rd Airborne Bde., maintenance and upgrading of route QL-19 west to the Mang Giang Pass, and the construction of logistical and airfield facilities, primarily at An Khe. Principle operational support consisted of the daily minesweep of QL-19 west of An Khe, several land clearing operations west of An Khe, the major upgrading of the barrier road around An Khe (completed during this period), construction of an access road to the summit of Hon Kong Mountain, and the construction of aircraft revetments. Due to the Tet Offensive, an increased effort went to security. C company was assigned the mission of securing the Qui Nhon Airfield. The company performed this mission from 7 February to 3 March. Primary effort on Highway QL-19 went to the repair of damaged bridges, and the repair of faulty pavement in and near the An Khe Pass. The asphalt plant at An Khe began full production shortly after 15 March and paving west from An Khe was begun. Work continued during this period on the following projects: The GS Maintenance Complex at Cha Rang; the taxiway, access road and turnoffs of the C-130 Airfield at An Khe, and the construction of two aircraft control towers, three hangars, the Division Supply Point, and the electrical distribution system at An Khe. At An Khe, the Logistical Depot, the heliport, and the repair of berms and drainage at the tank farm were completed during this period.

(f) 523rd Engr. Co. (PC). Principle tasks included the construction of Causeway Bridge Number 2 in Qui Nhon, completed shortly after 15 March, and the virtual completion of Tank Farm Number 3. As a result of the Tet Offensive, the company was assigned the mission of securing the RMK Quarry near Phu Cat. During most of this period this task was performed by a platoon sized element of the company.

(2) Period 15 March 1968 to 30 April 1968.

(a) 14th Engr. Bn. (C) with attachments (Earthmoving Plt., C company, 589th Engr. Bn. (Const) and the 171st Engr. Det. (WD)). Major portion of the battalion arrived at Wunder Beach on 21 March

1968. On the same day, D Company closed at Camp Evans (YD425478). Major activities include the following: Operational support to the 1st Cav. Div. (Airmobile), the 3rd Marine Division and the 101st Airborne Div.; the construction of storage facilities and a road network at Wunder Beach; the upgrading of the Hai Lang Road between Wunder Beach and Highway QL-1 to a two lane, limited weather road; and daily minesweep of the Hai Lang Road and of Hwy QL-1 from Quang Tri to the vicinity of Camp Evans.

(b) 27th Engr. Bn. (C)(-) with the 591st Engr. Co. (LE) attached. Wheeled vehicle operators flew into Da Nang by C-130 on 10 April, picked up their vehicles which arrived by ship the same day, and convoyed to the Gia Le Combat Base (YD823162) on 12 April. The remainder of personnel flew directly to Phu Bai, arriving there also on 12 April. Principle tasks include operational support to the 101st Airborne Division, the construction of a road between Camp Eagle and Route 547, and the upgrading of Route 547 west of the Perfume River. In conjunction with this road upgrading will be land clearing to an eventual distance of 200 meters on each side of the road.

(c) 35th Engr. Bn. (C) with attachments (517th Engr. Co. (LE) and the 511th Engr. Co. (PB)). Work continued on principle task of upgrading Hwy. QL-1 (see par. 4d (1)(b)). The rock crushing section of the 517th Engr. Co. (LE) arrived by LST in Da Nang on 21 March. It was fully operational at its site at Lang Co on 9 April and continued to produce base course rock for the Hai Van Pass through the end of this period.

(d) 39th Engr. Bn. (C) with the Earthmoving Platoon, D Company, 84th Engr. Bn. (C) attached. See par. 4d (1)(C) for activities up to 15 March. Additional activities include the start of upgrading of Route 533 west from Tam Ky (D company was relieved of mission at LZ Baldy on 14 April and moved to BT293229), and the construction of numerous facilities for the Americal Combat Center at Chu Lai.

(e) Training. During this period, mandatory training was conducted in accordance with regulations. A major effort was made to improve weapons proficiency and to improve the maintenance of individual weapons with special emphasis on the M16A1 rifle. A program was instituted whereby all soldiers would fire for zero every two weeks. All units were required to establish sufficient firing ranges to facilitate this program.

5. Logistics

13

EOD-3 30 April 1968

SUBJECT: Operational Report of the 45th Engineer Group (Const) for Period Ending 30 April 1968, RCS CSFOR-65 (RI)

a. Transportation. The logistic operations of the 45th Engr. Gp. during the month of February 1968 consisted chiefly of moving and preparing to move certain elements of the Group. While Group Headquarters and several battalions had been alerted to move early in February, the moves did not take place at that time due to the Tet Offensive. During the week of 4 February, all construction materials on hand in the 35th Engr. Bn. (C) were transferred to the 84th Engr. Bn. (Const) at LZ Uplift and Qui Nhon. Approximately 150 truck loads of material were involved in the transfer. Late in the week, the 35th Engr. Bn. (C) was directed to begin their movement to Da Nang. The battalion immediately began to transport their equipment to the staging area in Qui Nhon. Trucks from the 523rd Engr. Co. (PC), 589th Engr. Bn. (Const), and the 84th Engr. Bn. (Const) were utilized to assist in the move. The sea movement from Qui Nhon to Da Nang of the 35th Engr. Bn. (C) and their attached units required a Sea Train and eight LST's over the period from 10 February to 19 February. The 14th Engr. Bn. (C) started their move by Sea Train and LST from Cam Rahn Bay on 13 March 1968. The majority of the personnel and most of the wheel vehicles were offloaded at Da Nang and moved by convoy to Wunder Beach. The heavy equipment was taken directly to the beach area by ship. The offloading of this equipment continued at a slow pace until approximately 1 April. Most of the equipment was transferred to BARC's for movement to the beach. Headquarters and Headquarters Company, 45th Engineer Group (Const) departed by LST from Qui Nhon on 15 Mar 68 and arrived at Da Nang on 17 March 1968. The 27th Engr. Bn. (C) less Company D, and with the 591st Engr. Co. (LE) attached, began their move from the Saigon area on 9 April 1968. The majority of the personnel were transported by C-130 aircraft. Approximately 325 men were transported by four aircraft to Da Nang on 10 April. On 12 April, approximately 250 men arrived aboard three C-130 aircraft at Phu Bai. The battalion's vehicles and cargo were moved by sea on a Sea Train and seven LST's. The Sea Train, containing mostly wheel vehicles, docked at Da Nang on 12 April. These vehicles, approximately 150 in number, were convoyed over QL-1 to Gia Le, the battalion's new base area. The LST loads debarked at Tam My, the seaport for Hue. The last LST was due to depart Saigon 2 May 1968. The equipment and cargo were then transported to Gia Le by road. Transportation of equipment and supplies from Da Nang to other ports in the I Corp area is a problem due to the high density of divisional and support units in I CTZ and limited ground resupply capability. For obvious reasons, delivery of construction materials was delayed due to priority shipment of ammunition and rations.

b. Supply. The change of the Group operational area from II CTZ to I CTZ necessitated many changes in logistic operations and

procedures. Previously, all supplies were drawn from the Army Depot in Qui Nhon. Except for the extreme southern part of I CTZ, the majority of the supplies are provided by the Navy. Local Army Supply and Service units may take the requisitions, but most of the requirements are passed to the Naval Support Activity at Da Nang. Construction materials for I CTZ Lines of Communications, MSR's and other operational support missions approved by III MAF, are issued and shipped by the 3rd Naval Construction Brigade. The additional Army engineer battalions in I CTZ have placed a burden on the Seabee's supply system. Since the recent Army operations were not programmed, we are currently using materials programmed for LOC construction in 1969 and 1970. In the near future, LOC materials, especially heavy bridge timbers and large culvert may be in short supply.

c. Maintenance. The maintenance support of our units since arriving in I CTZ has been unsatisfactory for two reasons. The depot in this area does not have a demand established for engineer type equipment; hence, the nonavailability of critically needed repair parts. Most of the maintenance support units arrived on location after the engineer battalions and were not set up to provide the required support. One of the supporting units was severely affected by combat damage. The 45th Engr. Gp. has eased the spare parts resupply problem somewhat by establishing an NCO as a Material Readiness Expediter at the Army Depot location. The Group deadline rate for critical items increased from 5% in February to nearly 10% the first week in April. Since the expediter system was established, the rate has decreased to near normal.

6. Force Development: There were no formal force development activities during this reporting period.

7. Command Management: As a result of a complete change of mission, a new area of responsibility, a major change in assigned units, and the shift to joint service operations (Army, Navy and Marine Corps), several changes in command management have resulted.

a. The 45th Engr. Gp. no longer has a well defined, static area of responsibility (see par 4a). As a result of the formation of Provisional Corps Vietnam (PCV) and the major offensive actions of that HQ, tactical unit boundaries and missions have frequently and rapidly changed. Since the major mission of the 45th Engr. Gp. is operational support, an increased awareness of tactical operations, a closer association with tactical headquarters, and increased responsiveness to combat support requirements have been necessary. Battalions have been encouraged to coordinate directly with tactical units in order to

insure responsive support. Major requirements are of course assigned by III MAF or PCV to this HQ, which in turn assigns the task to the appropriate battalion.

b. Another change in command management has resulted from the loss of both construction battalions and all MCA construction. Prior to moving to I CTZ, this HQ was administering 52 MCA projects, including all cantonment construction within our area of responsibility. MCA construction required firm and continual control by this HQ. At present, without any MCA construction, far less control and direction from this HQ is necessary. Battalion commanders have been given maximum latitude and flexibility in their missions. This HQ has concentrated more on supporting subordinate units rather than on directing their specific efforts.

c. This HQ has continued the policy of attaching separate companies to battalions, and controls no equipment or manpower directly. As necessary, this HQ shifts engineer equipment between battalions to gain maximum effectiveness of resources.

8. Civic Affairs: Due to the movement of both the 45th Group Headquarters and two of its battalions during the reporting period, civic action activities were necessarily interrupted. Despite the difficulties, there were many notable contributions. Voluntary contributions in support of the Tet Aggression Relief Project (TARP) netted $VN 152,785. One school and one clinic were constructed. Numerous quantities of construction material were distributed. 2659 patients were treated in medcaps. The 39th Battalion received over 600 items of ordnance turned in through the Voluntary Informant Program (VIP), including 76 mines and 14 rockets.

Section 2, Lessons Learned: Commander's Observations, Evaluations, and Recommendations.

1. Personnel, none

2. Operations

a. Culvert versus bridge construction.

(1) OBSERVATION: Several small timber trestle bridges were recently abandoned, and subsequently burned by the enemy, when the tactical commander was unable to provide the manpower to guard them.

(2) EVALUATION: Although the restoration of national highways

EGD-3
SUBJECT: Operational Report of the 45th Engineer Group (Const) for Period Ending 30 April 1968, RCS CSFOR-65 (RI)

to MACV standards is a worthy goal, road upgrading must be carefully programed and constantly reevaluated to remain in perspective with tactical necessity. In the instance given, road upgrading progressed beyond the minimal needs of the tactical commander, and to the point where the defense of small bridges tied up too much manpower. In the view of the tactical commander, a far better solution was to construct culverts to the maximum extent, since they would not require security forces and were cheaper and easier to repair. Although in many cases this would mean drainage structures lacking capacity to pass monsoon peak flow, the temporary flooding of sections of the road should not prevent military traffic, assuming a crushed rock base course was present. If damage were caused by this flooding, the engineer effort most likely would be less than that required to guard bridges.

(3) RECOMMENDATION: Prior to constructing small bridges, consideration should be given to the construction of culverts.

b. Earthmoving platoons in support of combat engineer battalions.

(1) OBSERVATION: The attachment of earthmoving platoons to combat engineer battalions results in several problems that detract from full effectiveness.

(2) EVALUATION: To satisfy a need for an increased construction capability in two engineer combat battalions, Army, earthmoving platoons from engineer construction companies were attached, one to each battalion. Although equipped with more heavy construction equipment than a platoon from a light equipment company, several factors limit effectiveness. Factors include difficulties in maintenance, supply, administration and flexibility. Combat engineer battalions generally cannot provide the proper support to an attached earthmoving platoon. This problem is worsened when invariably the platoon is further attached to a combat engineer company in order to keep the platoon together and working on a single road construction mission.

(3) RECOMMENDATION: Light Equipment Companies should be attached to combat engineer battalions doing major construction instead of earthmoving platoons or similar elements without organic support.

c. Common construction standards

(1) OBSERVATION: When the 45th Engineer Group moved into I Corps Tactical Zone and assumed major road upgrading responsibility, construction materials were to be drawn from the 3rd Naval Construction Brigade. Under their Tactical Support Functional Components System, the criteria under which the TSFC's were designed are not as

rigorous as those within 18th Engineer Brigade criteria. Hence sufficient materials were not available to build to 18th Engr. Bde. standards.

(2) EVALUATION: 3 NCB criteria are essentially those contained in TM5-302 while 18th Engr. Bde. criteria are essentially those of AASHO. 18th Engr. Bde. criteria are those that are approved by the Vietnamese MPW for incorporation into the National Highway System.

(3) RECOMMENDATION: With the high degree of mobility of Engineer units and the frequent moves of these units, such basic construction standards as allowable stresses in materials should be made at a level controlling all (Navy, Marine, Army, Air Force) engineer units in RVN.

d. Painting POL tanks.

(1) OBSERVATION: 50,000 BBL POL tanks, painted white to reduce fuel evaporation, proved to be easy targets.

(2) EVALUATION: Petroleum experts recommended the white paint, citing the fact that with the reduced heat absorption, up to 5,000 gallons of fuel could be saved each month. After several B-40 rocket rounds punctured the tanks, fortunately without causing fire or explosion, they were quickly repainted olive drab. They now blend in well with their background.

(3) RECOMMENDATION: Applicable principles of camouflage should be observed in tank farm construction.

e. M2 Bailey Bridge Erection Set.

(1) OBSERVATION: Little attention is given to completeness of bridge erection sets.

(2) EVALUATION: When this Group's only panel bridge company, with its fairly complete erection set, relocated, it was found that serious shortages existed in the two remaining sets shared by three battalions. It was found that extensive borrowing was common, that component listings were not on hand, and that requisitions for missing items had not been processed. Immediate corrective action prevented what could have been a very serious inability to accomplish a principal mission.

(3) RECOMMENDATION: Special attention should be given the adequacy of panel bridge erection sets, especially those assigned to units not authorized them by TO&E.

EGD-3
SUBJECT: Operational Report of the 45th Engineer Group (Const) for Period Ending 30 April 1968, RCS CSFOR 65 (RI)

f. Responsibility for quality control.

(1) OBSERVATION: Several stretches of pavement, base prepared by troops and asphalt laid by contractor, failed.

(2) EVALUATION: Investigation showed that the asphalt was frequently laid too thin, partially due to unsatisfactory final grading. Although base course preparation was the responsibility of this unit, the contractor should have had responsibility for final quality control and should not have laid asphalt on an improperly prepared surface. Responsibilities should have been better defined prior to any paving.

(3) RECOMMENDATION: In joint paving operations, the agency doing the paving should be responsible for quality control of base course preparation as well as the paving.

3. Training. none

4. Intelligence.

a. Voluntary Informant Program

(1) OBSERVATION: In their eagerness to locate ordnance to turn in for rewards many Vietnamese have endangered their lives.

(2) EVALUATION: The premium placed on the turn-in of ordnance has promoted many Vietnamese, especially children, to take unnecessary chances to obtain rewardable items. It was noted that some children had discovered an abandoned mine field and had been extracting mines to turn in for rewards. A mine was accidentally detonated, injuring a number of children. Also children retrieve many dude artillery rounds with no conception of the danger involved. Generally, the people are not aware of the danger of handling these items.

(3) RECOMMENDATION: Printed material, written in Vietnamese, should be distributed explaining that ordnance items are dangerous, and in order to prevent civilian accidents, information leading to the discovery of munitions has the same monetary reward as actual turn in.

b. Voluntary Informant Program.

(1) OBSERVATION: Funds are not readily available to Army engineer units operating in I CTZ.

(2) EVALUATION: Under the present system, funds are provided the divisions in I CTZ for distribution to supporting units. The

divisions frequently change their areas of operation, however, and supporting units change. Further, many Army engineer units support Marine operations. The program does not allow inter-service transfer of funds, and the Marines cannot provide the funds.

(3) RECOMMENDATION: A funding system should be set up within the Engineer Troop Command to implement the program.

5. Logisitics

a. Movement of troops aboard seatrains.

(1) OBSERVATION: Unit personnel in large numbers may accompany their equipment on a Seatrain in an emergency after obtaining the captain's permission; however, the unit must provide rations, individual life preservers, and a doctor.

(2) EVALUATION: A combat engineer battalion recently completed a combat essential movement by sea along the coast of South Vietnam. During the same period many tactical units were also moving to the same area. Although a Seatrain was available to move much of the equipment, aircraft were not available to move the troops. Aboard a Seatrain, special permission had to be obtained from the ship's captain. The captain permitted the 300 troops to come aboard only after life preservers were obtained for each man and a doctor was provided to accompany the troops. Fortunately, the local depot had the preservers on hand for issue. The unit also had to provide C-rations for the troops.

(3) RECOMMENDATION: When timely air transportation of troops is impossible in a unit move utilizing Seatrain ships to carry vehicles and equipment, a request should be made to transport troops on the Seatrain.

b. Chicago Pneumatic G-900 Rock Drill accessories.

(1) OBSERVATION: When using the open purchase method of requisitioning drill accessories be sure to include: drifter size (model number), appropriate striking bars and complete description of accessories desired, to include thread diameter, and length.

(2) EVALUATION: Rock drill accessories (striking bars, couplings, drill steel, and bits) are a continuing resupply problem in RVN. There are three types of thread designs available; reverse buttress thread - FSN available; hi-lead thread, Manufacturers Part No. only; and rope thread, Manufacturers Part No. only. Open purchase request through 14ICC and normal requisition procedures have been

EGD-3
SUBJECT: Operational Report of the 45th Engineer Group (Const) for the Period Ending 30 April 1968, RCS CSFOR 65 (RI)

initiated on several occasions without complete success. A recent letter from Chicago Pneumatic indicated that only the striking bar is assigned a part number; other accessories are requested to match the striking bar desired. The type drifter being used on the rock drill is of utmost importance as striking bars are different for each drifter used. For example, Drifter CP475-DR uses striking bar R-54099. In addition, it was discovered through research that adaptors are available which enable the use of either type thread. An open purchase procurement order has been initiated through the Naval Procurement Office in Da Nang.

(3) RECOMMENDATION: When ordering rock drill accessories research must be accomplished prior to requisitioning. The striking bar described should be selected first and the other accessories requisitioned to match the striking bar selected.

c. Spider, Propeller Shaft, for Tractor, 290M, Part No. (76260) 3893J.

(1) OBSERVATION: The spider for the commercial Euclid Tractor Scraper, Model TS-24, was found to be the same, and removed the 290M tractor from deadline status. The spider will be replaced by the correct part upon its arrival.

(2) EVALUATION: A 290M Tractor was recently deadlined for the spider, figure 76, page 167, item 10, of TM 5-2420-206-35P, Manufacturers Part Number (76260) 3893J. The part mentioned was not available at the Direct Support Unit. The item was placed on Red Ball and the 290M Tractor parked to await the arrival of the part. To prevent loss of operating time, a search for a suitable substitute was begun.

(3) RECOMMENDATION: That part described be used as a substitute while awaiting original part needed.

6. Organization. none

George B Fink

1 Incl
as

GEORGE B. FINK
COLONEL, CE
Commanding

DISTRIBUTION
2 - CINCUSARPAC, ATTN: GPOP-DT
3 - CG, USARV, ATTN: AVHGC
4 - CG, 18th Engr Bde, ATTN: AVBC-C
15 - File

21

14 JUN 1968

AVBC-C (30 Apr 68) 1st Ind
SUBJECT: Operational Report of the 45th Engineer Group (Const) for the Period Ending 30 April 1968, RCS CSFOR-65 (R1)

DA, Headquarters, 18th Engineer Brigade, APO 96377 16 JUN 1968

TO: Commanding General, U.S. Army, Vietnam, ATTN: AVHGC-DST, APO 96375

1. The Operational Report-Lessons Learned of the 45th Engineer Group (Const) has been reviewed by this headquarters and is considered to be an excellent account of the 45th Group's activities during the reporting period ending 30 April 1968.

2. The recommendations of the Group Commander are concurred in with the following comments added.

a. Reference: Section 1, para 1 b. The 45th Engineer Group was placed in General Support of III MAF and Provisional Corps, Vietnam (PCV) on 15 March 1968 upon its deployment to I Corps Tactical Zone.

b. Reference: Section 2, para 2 a. This headquarters concurs that MACV LOC upgrading must be carefully programmed and constantly reviewed to remain in perspective with tactical necessity. Although the upgrading of major highways to MACV Standard is recognized as being a most important long term goal, consideration should be given to establishing an interim standard which would meet the tactical situation, thereby rendering routes of primary interest passable under all conditions. Such initial upgrading would later provide the base work for upgrading these sections to MACV Standard when effort becomes available. This approach could be the basis for a more aggressive road opening program, while still adhering to the priorities set forth by MACV.

c. Reference: Section 2, para 2 f. This headquarters concurs with the basic premise that the responsibility for quality control of joint contract projects should be better defined. The engineer unit, however, should have over all responsibility for quality control of the finished base course product, to include final grading and shaping just prior to lay down. Close coordination between the contractor and engineer unit involved is essential and should be emphasized in both the contract and unit construction directive.

d. Reference: Section 2, para 4 a. Preparation of posters to warn civilians of the dangers of handling munitions to be turned in for money in the Voluntary Informant Program is required. They should emphasize that information leading to the discovery of munitions has the same monetary value as the actual turn in.

e. Reference: Section 2, para 4 b. The recommended funding system for the Voluntary Informant Program was established on 23 April. Funds became available on 11 June permitting implementation of the program.

AVBC-C
SUBJECT: Operational Report of the 45th Engineer Group (Const) for the Period Ending 30 April 1968, RCS CSFOR-65 (R1)

Douglas K Blue

DOUGLAS K. BLUE
Colonel, CE
Deputy Commander

23

AVHGC-DST (30 April 1968) 2d Ind CPT Arnold/dls/LBN 4485
SUBJECT: Operational Report of the 45th Engineer Group (Const) for Period Ending 30 April 1968, RCS CSFOR-65 (RI)

HEADQUARTERS, US ARMY VIETNAM, APO San Francisco 96375

TO: Commander in Chief, United States Army, Pacific, ATTN: GFOP-DT, APO 96558

1. This headquarters has reviewed the Operational Report-Lessons Learned for the quarterly period ending 30 April 1968 from Headquarters, 45th Engineer Group (Construction).

2. Comments follow:

a. Reference item concerning Voluntary Informant Program, page 16, paragraph 4a; and 1st Indorsement, paragraph 2d: Concur. The required printed material should be prepared through coordination with the local psychological operations unit. Unit will be notified by this headquarters of the appropriate action to be taken.

b. Reference item concerning Voluntary Informant Program, page 16, paragraph 4b; and 1st Indorsement, paragraph 2e. Concur. A funding system was established on 23 April 1968 under the provisions of USARV Regulation 37-25, subject: Rewards to Vietnamese Civilians for Weapons and Explosives. This Regulation was specifically written to provide a source of funds to USARV nondivisional units e.g. USARV Engineer Troops, Military Police, Medical, Signal and Aviation units, for rewarding RVN civilians who turn-in weapons and ammunition. The current funding program for USARV Engineer Troops has been established at 1,500,000 VN$.

c. Reference item concerning movement of troops aboard seatrains, page 17, paragraph 5a: Nonconcur. MACV Directive 55-4 establishes the procedure for organizations to request unit moves. The selection of the appropriate transportation means is the function of TMA. Utilization of Seatrain facilities intra RVN, should be used only when no other means, air or water, is sufficient. Generally, less expensive means than the $8,500 per day Seatrain are available. Proposed USARV Regulation 55-4 is presently being staffed and should clarify procedures.

FOR THE COMMANDER:

JOHN V. GETCHELL
Captain, AGC
Assistant Adjutant General

Cy furn:
HQ 45th Engr Gp (Const)
HQ 18th Engr Bde

GPOP-DT (30 Apr 68) 3d Ind
SUBJECT: Operational Report of HQ, 45th Engr Gp (Const) for Period Ending 30 April 1968, RCS CSFOR-65 (R1)

HQ, US Army, Pacific, APO San Francisco 96558 15 JUL 1968

TO: Assistant Chief of Staff for Force Development, Department of the Army, Washington, D. C. 20310

This headquarters has evaluated subject report and forwarding indorsements and concurs in the report as indorsed.

FOR THE COMMANDER IN CHIEF:

K. F. OSBOURN
MAJ. AGC
Asst AG

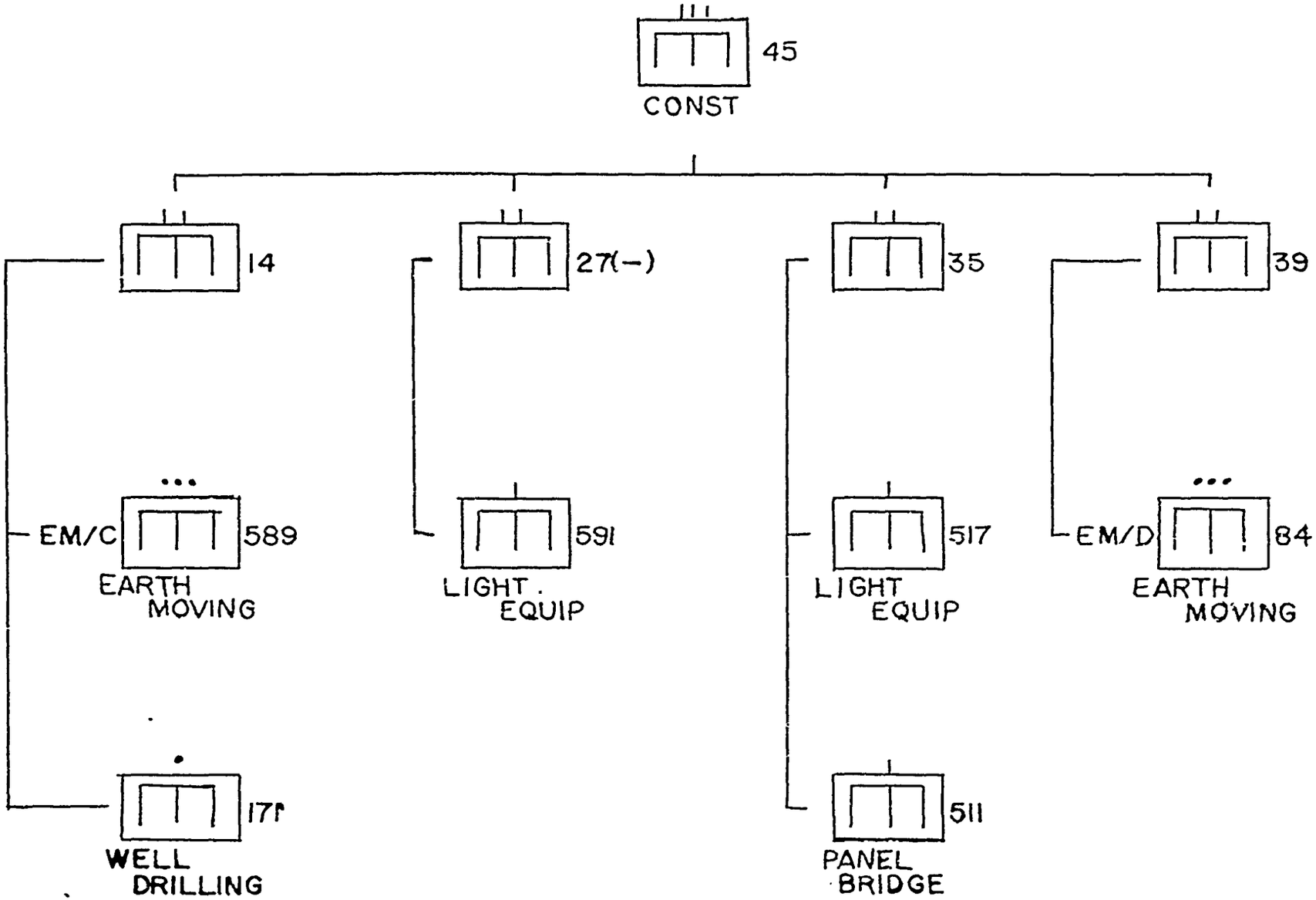
45
CONST
14
27(-)
35
39
EM/C
589
EARTH MOVING
591
LIGHT EQUIP
517
LIGHT EQUIP
EM/D
84
EARTH MOVING
171
WELL DRILLING
511
PANEL BRIDGE

Inclosure 1

Security Classification

26

DOCUMENT CONTROL DATA - R & D

(Security classification of title, body of abstract and indexing annotation must be entered when the overall report is classified)

1. ORIGINATING ACTIVITY (Corporate author) OACSFOR, DA, Washington, D.C. 20310	2a. REPORT SECURITY CLASSIFICATION For Official Use Only 2b. GROUP

3. REPORT TITLE

Operational Report - Lessons Learned, Hq, 45th Engineer Group (Const) (U)
(CORRECTED COPY)

4. DESCRIPTIVE NOTES (Type of report and inclusive dates)

Experiences of unit engaged in counterinsurgency operations. 1 Feb - 30 Apr 68

5. AUTHOR(S) (First name, middle initial, last name)

CO, 45th Engineer Group (Const)

6. REPORT DATE 30 April 1968	7a. TOTAL NO. OF PAGES 24	7b. NO. OF REFS
8a. CONTRACT OR GRANT NO. b. PROJECT NO. N/A c. d.	9a. ORIGINATOR'S REPORT NUMBER(S) 682265 9b. OTHER REPORT NO(S) (Any other numbers that may be assigned this report)	

10. DISTRIBUTION STATEMENT

11. SUPPLEMENTARY NOTES N/A	12. SPONSORING MILITARY ACTIVITY OACSFOR, DA, Washington, D.C. 20310

13. ABSTRACT

24

DD FORM 1 NOV 65 1473

UNCLASSIFIED
Security Classification

27 The following items are recommended for inclusion in the Lessons Learned Index:

ITEM 1

* SUBJECT TITLE _____

** FOR OT RD # _____

***PAGE # _____

ITEM 2

SUBJECT TITLE _____

FOR OT RD # _____

PAGE # _____

ITEM 3

SUBJECT TITLE _____

FOR OT RD # _____

PAGE # _____

ITEM 4

SUBJECT TITLE _____

FOR OT RD # _____

PAGE # _____

ITEM 5

SUBJECT TITLE _____

FOR OT RD # _____

PAGE # _____

* Subject Title: A short (one sentence or phrase) description of the item of interest.

** FOR OT RD # : Appears in the Reply Reference line of the Letter of Transmittal. This number must be accurately stated.

***Page # : That page on which the item of interest is located.

28

- - - - - - - - - - -FOLD - - - -

DEPARTMENT OF THE ARMY
OACSFOR
Washington, D.C. 20310

POSTAGE AND FEES PAID
DEPARTMENT OF THE ARMY

STAPLE

OFFICIAL BUSINESS

Office of the Assistant Chief of Staff for Force Development
ATTN: Operational Reports Branch
Headquarters, Department of the Army
Washington, D.C. 20310

STAPLE

DA Label 18, 1 Apr 58 PREVIOUS EDITIONS OF THIS LABEL ARE OBSOLETE.

16—79643-1

- - - - - - - - - - -FOLD - - - - -