UNCLASSIFIED

AD NUMBER

AD837645

NEW LIMITATION CHANGE

TO

Approved for public release, distribution unlimited

FROM

Distribution authorized to U.S. Gov't. agencies and their contractors; Critical Technology; AUG 1968. Other requests shall be referred to Air Force Weapons Lab., AFSC, Kirtland AFB, NM.

AUTHORITY

AFWL ltr, 30 Nov 1971

THIS PAGE IS UNCLASSIFIED

AFWL-TR-68-61

AFWL-TR-
68-61

AD837645

AN INTEGRATED SIX-DEGREE-OF-FREEDOM TRAJECTORY AND AERODYNAMIC HEATING AND ABLATION COMPUTER PROGRAM

(STRAB-6)

W. J. Moulds

TECHNICAL REPORT NO. AFWL-TR-68-61

August 1968

D D C
RECEIVED
AUG 16 1968
C

AIR FORCE WEAPONS LABORATORY
Air Force Systems Command
Kirtland Air Force Base
New Mexico

This document is subject to special export controls and each transmittal to foreign governments or foreign nationals may be made only with prior approval of AFWL (WLDE), Kirtland AFB, NM, 87117.

159

Best
Available
Copy

AFWL-TR-68-61

AN INTEGRATED SIX-DEGREE-OF-FREEDOM TRAJECTORY AND AERODYNAMIC HEATING AND ABLATION COMPUTER PROGRAM (STRAB-6)

W. J. Moulds

TECHNICAL REPORT NO. AFWL-TR-68-61

This document is subject to special export controls and each transmittal to foreign governments or foreign nationals may be made only with prior approval of AFWL (WLDE), Kirtland AFB, NM, 87117. Distribution is limited because of the technology discussed in the report.

FOREWORD

This research was performed under Program Element 6.24.05.06.F, Project 5791, Task 579122.

Inclusive dates of research were July 1966 through November 1967. This report was submitted by the Air Force Weapons Laboratory Project Officer, Mr. W. J. Moulds (WLDE), on 13 May 1968.

The author wishes to express his appreciation and thanks to Lt Colonel P. D. Cronquist and Mr. C. E. O'Haver for suggesting and encouraging the accomplishment of this work. Special thanks are due to Captain J. D. Young and Lt R. H. Aungier for their assistance and answers to the numerous questions by the author. Last, but not least, the author wishes to acknowledge the assistance of Mr. J. L. Hitchcock, who did much of the programing of STRAB-6.

This technical report has been reviewed and is approved.

W. J. MOULDS
Project Officer

PARLEY D. CRONQUIST
Lt Colonel, USAF
Chief, Electronics Branch

GEORGE C. DARBY, JR
Colonel, USAF
Chief, Development Division

ABSTRACT

(Distribution Limitation Statement No. 2)

An integrated computer program (STRAB-6) for the complete analysis of a blunt, conical reentry vehicle as to its trajectory and aerothermal environment upon atmospheric reentry is presented. The trajectory portion of the program calculates the vehicle motions in six-degrees-of-freedom, while the thermal portion calculates the aerodynamic heating and ablation of the vehicle. The earth model is an oblate, rotating spheroid whose parameters and gravitational potential are described herein. The equations of motion, the method of integration, thermal model and input forms for the program are discussed. The thermal model examined in this report assumes thick skin solution where the skin is of any composite structure made of discrete layers of material whose properties may vary from layer to layer. Also, the heatshield is comprised of one, two, or more different ablative materials. STRAB-6 computes nose-blunting and includes this effect in the aerodynamics. STRAB-6 is written in FORTRAN IV for the CDC 6600 computer.

This page intentionally left blank.

CONTENTS

Section		age
I	INTRODUCTION	1
II	MAIN PROGRAM DESCRIPTION	3
	General	3
	Equations of Motion	5
	Integration Technique	44
	Aerodynamic Heating and Ablation	45
	Aerodynamics	64
III	SUBROUTINES	74
	Atmospheric Properties	74
	Hot-Air Properties	74
	Ablator Thermal Properties	75
	Ablation Gas Properties	75
	Stability Derivatives	76
	Subroutine Initial	76
	Subroutine ATTK and SSLP	77
	Subroutine DLON	77
IV	PROGRAM OPERATION	78
	Input Data Requirements	78
	Output Data Requirements	79
	Flow Diagrams	81
	APPENDIXES	
	I STRAB-6 Program Listing	91
	II STRAB-6 Program Listing for Multiple Case Run	129
	III Sample Case Output	133
	REFERENCES	151
	DISTRIBUTION	154

ILLUSTRATIONS

Figure		Page
1	Geocentric Earth Model	4
2	Inertial Reference Frame, R, and Earth Reference Frame, Σ	7
3	Geocentric, Geodetic, and Astronomical Latitudes	8
4	Geodetic to Geocentric	10
5	Horizontal Reference Frame	13
6	Inertial, Horizontal Body Axis Coordinate System	15
7	Gravitational Direction	24
8	Gravitational Transformation	27
9	System of Angular Displacement	30
10	Angular Velocities of Euler Angles	33
11	Moment of Momentum about 0	36
12	Components of Momentum	37
13	Schmidt Plot in an Infinitely Thick Wall	51
14	Model for Wall Temperature Profile and Ablation Recession Calculations	52
15	Ablative Process	54
16	Vehicle Nomenclature	60
17	Vehicle Nose-Shape Change	62
18	Aerodynamic Body Subject to Normal and Tangential Forces	67

SECTION I

INTRODUCTION

The effects of aerodynamic heating and ablation on the motions, aerodynamic forces, and trajectory deviations of a reentry vehicle have been the subject of many analyses in recent years. Previous trajectory and heating programs have been separate, requiring that each be run separately with data from one used as input to the other. Such a method sometimes requires numerous runs before the output data converge to reasonable answers, and is both expensive in computer costs and time consuming. This report presents a computer program (STRAB-6) for the complete analysis of a reentry vehicle as to its trajectory and aerothermal environment. STRAB-6 provides a six-degree-of-freedom trajectory analysis as well as aerodynamic heating and ablation analysis for conical vehicles reentering the atmosphere at hypersonic speeds.

STRAB-6 uses some of the features from other 6-D programs (Refs. 1, 2, 3, 4, 5, 6). The trajectory portion of the program computes the six-degree-of-freedom rigid body motions for an aerodynamically symmetric reentry vehicle encountering a model atmosphere. Slender-body aerodynamic theory was used and the required aerodynamic coefficients are provided by subroutine inputs (as a function vehicle shape, angle-of-attack, and either Mach number or altitude). The atmospheric model that is used is based on the 1962 ARDC atmosphere, and the geocentric model that is used is a rotating oblate spheroid.

The aerodynamic heating and ablation portion of the program (Ref. 7) (HEATAB), in its original form, computed point mass heating for a sharp-nosed conical vehicle. The basic heating equations of this original program (HEATAB) are described in reference 7. There have been numerous improvements to the original program to include: heating on a blunt-nosed vehicle, the case where a vehicle heatshield is comprised of two or more different ablators, and boundary layer edge conditions.

The equations of motion and of heat transfer are general in that they apply to most axially symmetric vehicles. Even though this program considers the body in general motion under combined angles of attack and sideslip, the vehicle is assumed to ablate symmetrically. The ablation weight loss, nose bluntness, and vehicle volume changes are considered in the calculations for

the viscid and inviscid drag coefficients (CD) and stability derivatives, as well as the vehicle mass moment of inertia properties. In addition, the aerodynamic coefficients are calculated for the complete range of angle-of-attack ($0 \leq \alpha \leq 360°$) and sideslip ($0 \leq \beta \leq 360°$).

The position vector is calculated in a rotating earth-centered coordinate system, while the angular positions are calculated in a reentry-centered coordinate system. Computations are carried out, using the Runge-Kutta method of numerical integration employing a fixed step size-mode.

This program is specific in that the equations have been applied to a blunt-nosed conical vehicle with the starting point at reentry conditions. With some modifications, the user could easily adapt the program to analyze a missile from launch by adding thrust subroutines and substituting launch conditions for reentry conditions.

SECTION II

MAIN PROGRAM DESCRIPTION

1. GENERAL

The computer program, STRAB-6, is a self-contained program in the sense that it can generate the required aerodynamic data, and calculate the mass and inertial properties due to ablation changes of a symmetrical vehicle without any additional preliminary calculations.

STRAB-6 calculates the resultant loads, motions, and trajectory of a rigid vehicle in general 6-D motion as well as boundary-layer properties and time-temperature distribution in a body. If a nonablating trajectory is desired, an option is provided to omit the heating and ablation portion of the program.

At the initiation of a reentry run, the vehicle is located in space with the desired reentry conditions (i.e., velocity, flight path angle, altitude, roll rate). Also, the user must input the latitude, longitude, and azimuth at which he wishes to start the trajectory. Other trajectory parameters the user may wish to input are angle-of-attack and angle-of-sideslip; otherwise, these values are zero for a nominal trajectory.

The aerodynamic drag coefficients (CD) are obtained from Newtonian slender-body theory for inviscid drag and modified Blasius flat plate theory for viscous drag. These coefficients are calculated in subroutines CDSF and CDFM and are limited to vehicle shapes of spherically blunted cones where the ratio of base radius to axial length is approximately equal to the cone half-angle. A discussion of these theories is in section II-5.

The atmospheric model used in the program is based on the 1962 ARDC model atmosphere, and it expresses the density, ambient temperature, pressure, and the speed of sound as functions of altitude. The geocentric model used is a rotating oblate spheroid, where the sea level radius, R_E, is (figure 1)

$$R_E = \frac{R_{EQ}}{\left(1 + P_E \sin^2 \phi_c\right)^{1/2}} \qquad (1)$$

where

R_{EQ} = earth equatorial radius-ft

λ_c = geocentric latitude-degree

$$P_E = \frac{e_E^2}{1 - e_E^2} = 0.00673852 \text{ (Ref 8)} \tag{2}$$

e_E = eccentricity of earth = 0.0818133302

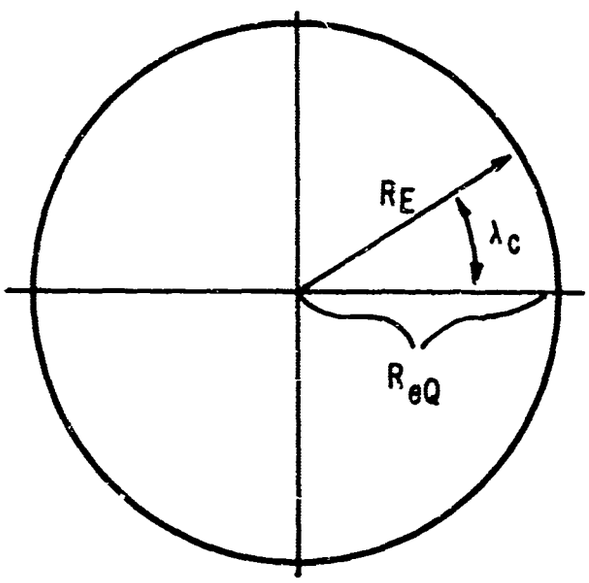

Figure 1. Geocentric Earth Model

The vehicle thermal model as presented in HEATAB has been modified to extend the calculations to include the total integrated ablation mass loss rate for a conical reentry vehicle. The body is divided into a number of segments, or stations along the cone, and the heating rate at each station is computed. In addition to the original input data required by HEATAB, the fore and aft radii, slant length, and transition Reynolds number of each body segment must be supplied. These input data are identified as: Data RS, Data RL, Data SOL, and Data RN. Computations of the skin temperature profile and ablation mass loss rate are identical to the method in HEATAB, except that these calculations are made for each X-station at each trajectory point.

As written, the STRAB-6 output will give, for each time interval, an output of trajectory conditions, body conditions, and aerodynamic parameters. The trajectory output conditions include time, altitude, velocity, and flight path angle. The body conditions for each X-station include weight loss rate per unit area, wall recession, and wall temperature profile. The aerodynamic parameters include CD, maximum aerodynamic load, angle-of-attack and sideslip, restoring forces and moments, and boundary layer edge conditions.

2. EQUATIONS OF MOTION

The equations of motion for an ascent or descent through the atmosphere can be written with various degrees of complexity. The equations differ in form depending upon the coordinate system, the number of degrees of freedom, the method of adjusting for the earth's rotation, and the integration scheme. In the evaluation of reentry vehicles for height-of-burst (HOB) errors, dispersion analysis, or circular error probable (CEP), the equations of motion must be written with six-degrees-of-freedom (6-D). This program employs a Runge-Kutta method of integration for a high degree of accuracy.

a. Coordinate Systems

The equations of motion can be written in vector notation using Newton's second law. A summation of the forces acting on the vehicle results in the equation

$$m \frac{d^2\vec{R}}{dt^2} = \sum \vec{F} - 2m\vec{\omega} \times \vec{v} - m\vec{\omega} \times (\vec{\omega} \times \vec{R})$$

Before this equation can be solved, however, it must be expressed in terms of a convenient coordinate system.

There are five principal coordinate systems or reference frames associated with orbital mechanics and trajectories. Various other reference frames can be used depending on the complexity of the problem to be solved. For this report, there are three reference frames: inertial reference frame, topocentric or horizontal reference frame, and earth reference frame. The following is a description of each and their interrelationships. All the reference frames are right-handed orthogonal coordinate systems.

(1) Inertial Reference Frame

The basic coordinate for the program is a nonrotating inertial reference frame fixed with its origin at the geocenter as shown in figure 2. Z_R points north along the axis of rotation of the earth and X_R and Y_R lie in the equatorial plane. X_R lies in the prime meridian plane at the start of a trajectory run (time, t = 0). The earth rotates with an angular velocity ω_E about Z_R; hence the earth reference frame, E, differs from the inertial frame, R, by a rotation $\omega_E t$.

The vehicle center of gravity (CG) is located in the inertial R frame by the longitude, β, latitude, λ_c, and vehicle altitude, ALT. The distance from the geocenter to the vehicle CG, measured along the vector whose orientation is determined by the angles β and λ_c is

$$R = R_E + ALT \tag{3}$$

where R_E is defined by equation (1).

It may be worthwhile to digress briefly on the subject of latitude. There are three latitudes commonly used in astrodynamics; however, in this report we will be concerned only with geocentric and geodetic. Geocentric latitude, λ_c, is defined as the angle, measured at the earth's center, between the equatorial plane and a radius, R_E, to the point of interest on the earth's surface. The geodetic latitude, λ_g, is the angle between the equatorial plane and a normal to a reference spheroidal surface, Z_H, as shown in figure 3.

The reference spheroid is an oblate ellipsoid whose surface nearly approximates the sea-level surface of the earth. Such a spheroid is characterized by a "flattening" or "oblateness," f, where

$$f = (a - b)/a \tag{4}$$

and a is the semimajor, and b the semiminor axis of the ellipse of revolution forming the spheroid. The derivation of equation (1) can be easily obtained from the equation for an ellipse if a equals equatorial radius, R_{EQ}, and b equals polar radius, R_{Po}. Therefore,

$$\frac{x^2}{R_{EQ}^{\ 2}} + \frac{z^2}{R_{Po}^{\ 2}} = 1 \tag{5}$$

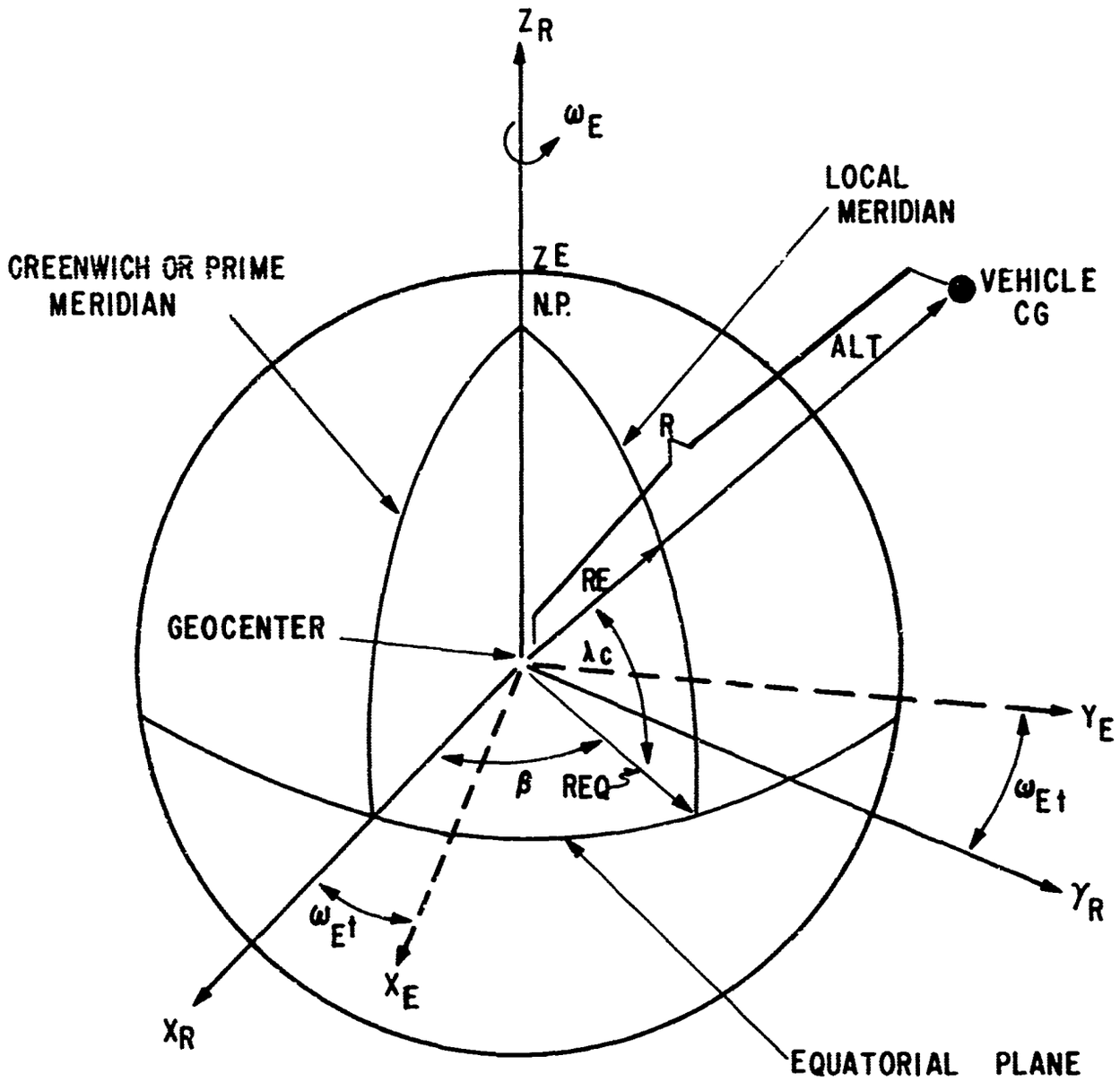

Figure 2. Inertial Reference Frame, R, and Earth Reference Frame, E

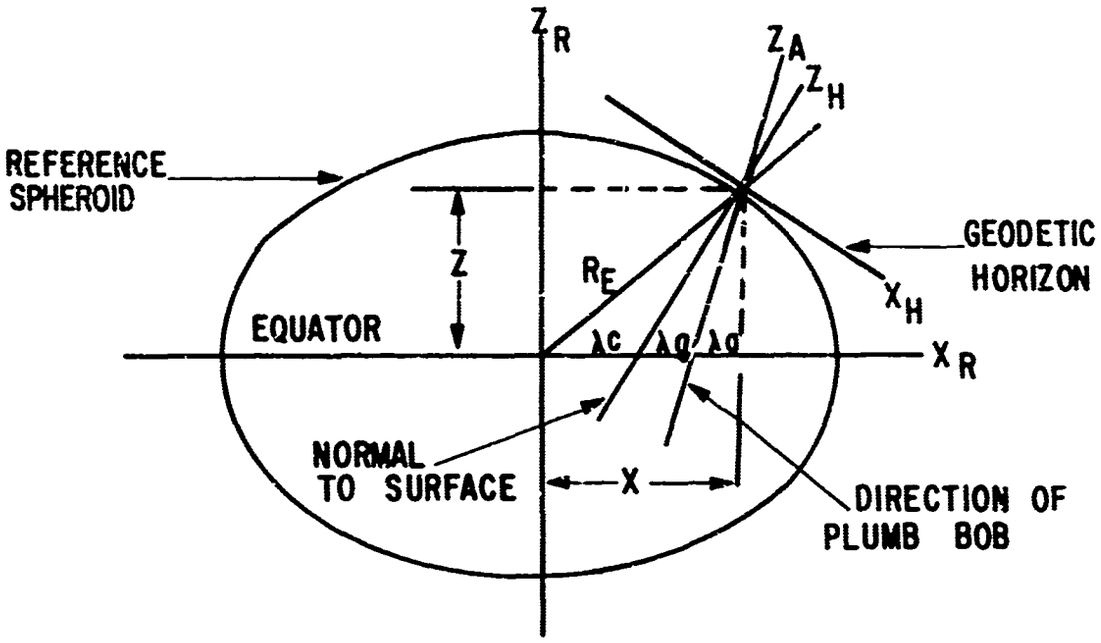

Figure 3. Geocentric, Geodetic, and Astronomical Latitudes (Ref. 9)

By multiplying R_{EQ}^2 and adding and subtracting z^2 on the left side,

$$x^2 + z^2 - z^2 + \frac{R_{EQ}^2 z^2}{R_{Po}^2} = R_{EQ}^2$$

But from figure 3

$$x^2 + z^2 = R_E^2$$

$$z = R_E \sin \lambda_c \tag{6}$$

Therefore,

$$R_E^2 + R_E^2 \sin^2 \lambda_c \left(\frac{R_{EQ}^2}{R_{Po}^2} - 1 \right) = R_{EQ}^2 \tag{7}$$

Solving for R_E

$$R_E = \frac{R_{EQ}}{\left[1 + \sin^2 \lambda_c \left(\frac{R_{EQ}^2}{R_{Po}^2} - 1\right)\right]^{1/2}} \tag{8}$$

From reference 10

$$f = 1 - \sqrt{1 - e_E^2} \tag{9}$$

and from equation (4)

$$\frac{R_{EQ}}{R_{Po}} = \frac{1}{1 - f}$$

By squaring both sides and substituting equation (9) for f,

$$\frac{R_{EQ}^2}{R_{Po}^2} = \frac{1}{1 - e_E^2} \tag{10}$$

Now, by adding -1 to both sides,

$$\frac{R_{EQ}^2}{R_{Po}^2} - 1 = \frac{1}{1 - e_E^2} - 1 = \frac{e_E^2}{1 - e_E^2}$$

From equation (2), it is shown that

$$P_E = \frac{R_{EQ}^2}{R_{Po}^2} - 1 \tag{11}$$

Equation (1) is now obtained by substituting equation (11) into equation (8).

$$R_E = \frac{R_{EQ}}{\left(1 + P_E \sin^2 \lambda_c\right)^{1/2}}$$

The sea-level radius of the earth can now be determined at any station by knowing the geocentric latitude, λ_c, of the station.

The astronomical latitude, λ_a, is defined as the angle between the local astronomical zenith, Z_a, or vertical (as determined by a plumb bob or, actually, by the direction of the local gravitational field) and the equatorial plane. Since astronomical latitude is based upon the local gravitational field and is also centrifugal-force affected, it differs from the geodetic latitude by a very small value and can be considered negligible. Therefore, this report will consider geodetic and astronomical latitudes identical and will be concerned only with the relationship between geodetic and geocentric.

To convert from geodetic latitude to geocentric latitude, the slope (θ) of the tangent (geodetic horizon, see figure 4) at the station on the earth's surface can be obtained by differentiating equation (5).

$$\frac{2x}{R_{EQ}^2} + \frac{2z}{R_{Po}^2}\frac{dz}{dx} = 0$$

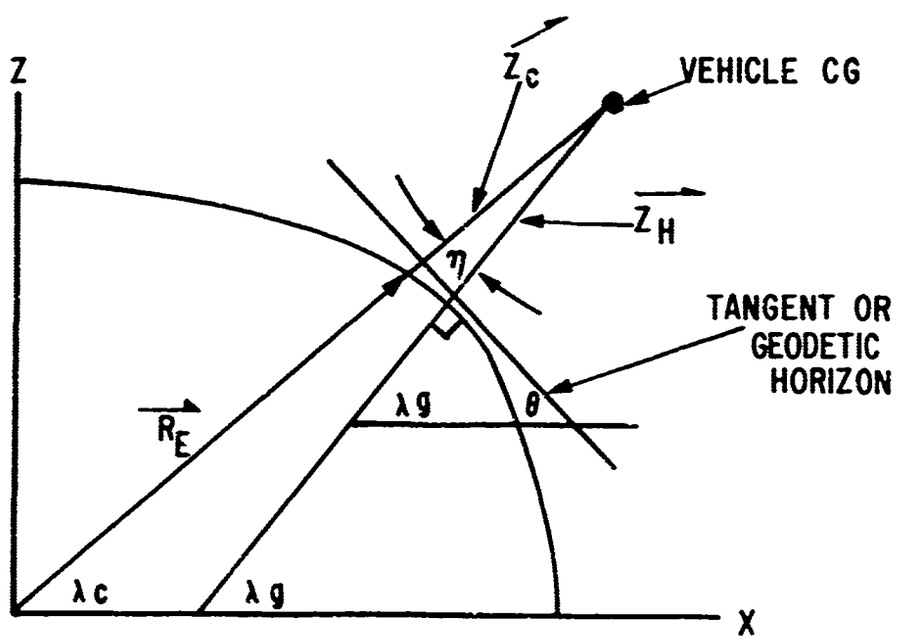

Figure 4. Geodetic to Geocentric

Therefore,

$$\tan \theta = \left|\frac{dz}{dx}\right| = \left| - \frac{R_{Po}^{2}}{R_{EQ}^{2}} \frac{x}{z}\right| \tag{12}$$

but

$$\tan \theta = \frac{1}{\tan \lambda_g}$$

$$\tan \lambda_c = \frac{z}{x}$$

By substituting these quantities into equation (12), the relationship between λ_g and λ_c is established.

$$\tan \lambda_g = \frac{R_{EQ}^{2}}{R_{Po}^{2}} \tan \lambda_c \tag{13a}$$

But by substituting equation (10) into equation (13a), λ_c can be determined from one constant. Therefore,

$$\lambda_c = \arctan \left[\left(1 - e_E^{2}\right) \tan \lambda_g\right] \tag{13b}$$

$$\eta = \lambda_g - \lambda_c \tag{14}$$

With the foregoing relationships established, the second reference frame can now be defined.

(2) Topocentric or Horizontal Reference Frame

The second of these coordinate systems is commonly known as the topocentric, but has other names depending upon the users application. Some of the names are horizon, launch, reentry, and trajectory system. This report refers to this coordinate system as the horizontal, H. The word topocentric

is derived from the Greek *topos*, meaning a place. In this reference frame, the origin is taken at the observer as shown in figure 5. The Y_H-axis is directed toward the east, the X_H-axis toward the south, and the Z_H-axis is directed toward the astronomical zenith. This system is rotated along with the earth's reference frame, and is, therefore, not inertial. The angle from the north direction measured clockwise (or east) in the X_H, Y_H plane is defined as azimuth, AZ.

With the horizontal reference frame now defined, it is now possible to complete three of the six-degrees-of-freedom.

b. Equation Development

Newton's second law for a rotating coordinate system is repeated here for convenience.

$$m \frac{d^2\vec{R}}{dt^2} = \sum \vec{F} - 2m\vec{\omega} \times \vec{v} - m\vec{\omega} \times (\vec{\omega} \times \vec{R})$$

or

$$\frac{d^2\vec{R}}{dt^2} = \frac{\sum \vec{F}}{m} - 2\left(\omega_E \times \frac{d\vec{R}}{dt}\right) - \vec{\omega}_E \times \left(\vec{\omega}_E \times \vec{R}\right) \tag{15}$$

where

$\frac{d^2\vec{R}}{dt^2}$ is the vector acceleration of the vehicle CG with respect to the inertial reference frame

$\vec{F}$ is the total force vector on the reentry vehicle

$2\left(\vec{\omega}_E \times \frac{d\vec{R}}{dt}\right)$ is the coriolis acceleration of the axis system due to the rotation of the earth

m is vehicle mass

$\vec{\omega}_E \times \left(\vec{\omega}_E \times \vec{R}\right)$ is the centrifugal acceleration of the axis system due to the earth's rotation

$\omega_E = 0.7292 \times 10^{-4}$ radian/sec, earth rotational angular velocity

Since the horizontal reference system $\left(X_H, Y_H, Z_H\right)$ will rotate with the earth, several vector cross-products will appear in the final equation for $d^2\vec{R}/dt^2$. Therefore, the rotation rate vector, ω_E, and general vector, $\vec{R}$, must be expressed in the same reference frame $\left(X_H, Y_H, Z_H\right)$ for expansion.

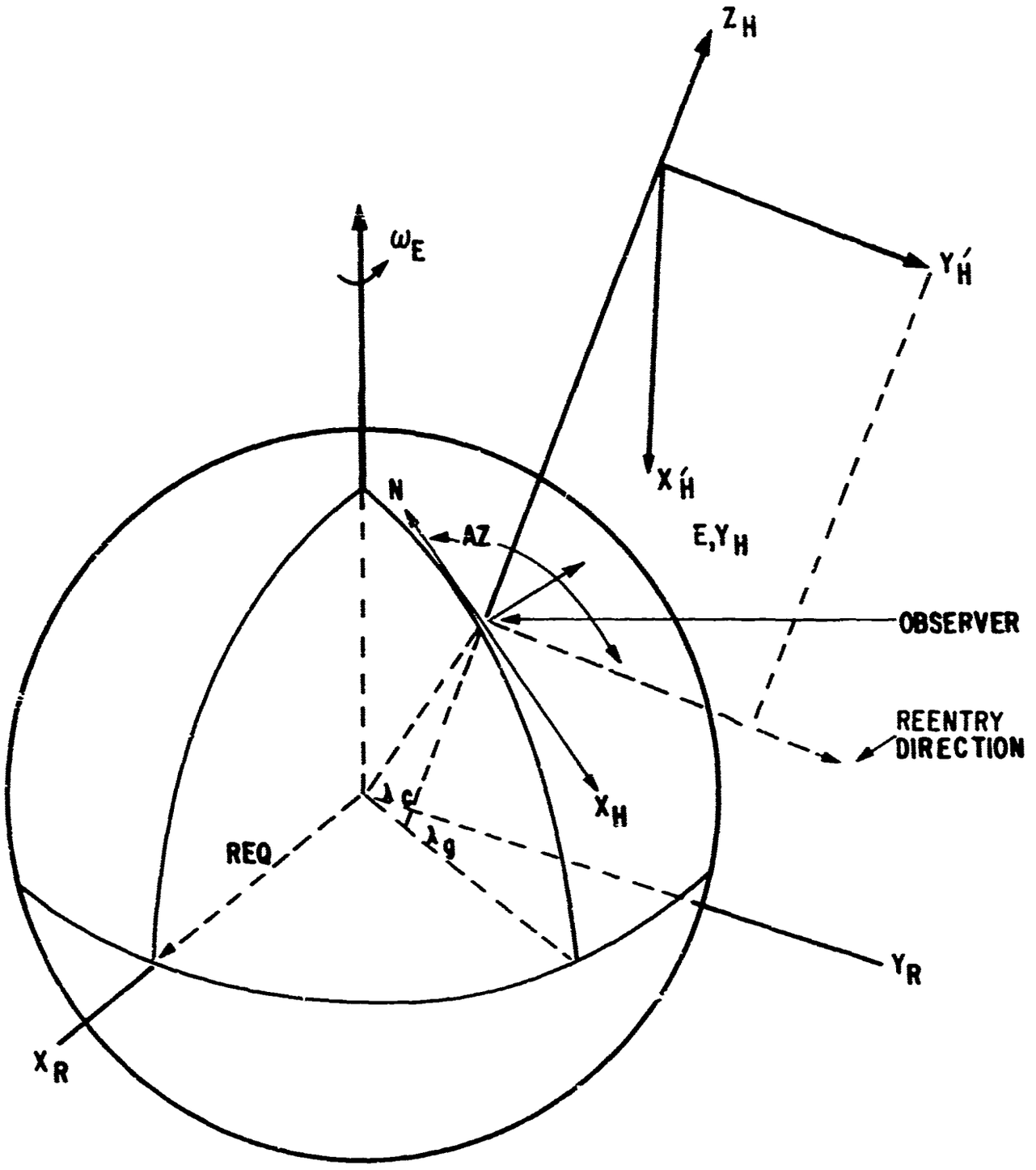

Figure 5. Horizontal Reference Frame

As shown in figure 5, pseudo-trajectory reference frame $\left(X_H', Y_H', Z_H'\right)$ has its origin at the initial position of the vehicle center of gravity. This frame is fixed in space (with respect to the horizontal (H) frame), with Z_H equal to the reentry altitude, and with X_H' and Y_H' rotated from X_H, Y_H about Z_H some initial azimuth angle, AZ. The vehicle flight path is initially fixed in the $Y_H' - Z_H'$ plane directed downward some reentry angle, γ_e.

Therefore, the components of X_H, Y_H, Z_H on X_H', Y_H', Z_H' is

$$\vec{X}_H' = \cos AZ \cdot \vec{X}_H + \sin AZ \cdot \vec{Y}_H \tag{16a}$$

$$\vec{Y}_H' = \sin AZ \cdot \vec{X}_H - \cos AZ \cdot \vec{Y}_H \tag{16b}$$

$$\vec{Z}_H' = \vec{Z}_H \tag{16c}$$

As previously shown, the horizontal reference frame is not inertial, and therefore, rotates at the same rotation rate as the earth. So that $\vec{\omega}_E$ may be written

$$\vec{\omega}_E = \omega_E \sin \lambda_g \vec{Z}_H - \omega_E \cos \lambda_g \vec{Y}_H \tag{17}$$

Equation (17) may be rewritten after substituting equation (16b) into equation (17).

$$\vec{\omega}_E = \omega_E \sin \lambda_g \vec{Z}_H - \omega_E \cos \lambda_g \cdot \sin AZ \vec{X}_Y$$

$$+ \omega_E \cos \lambda_g \cdot \cos AZ \vec{Y}_H \tag{18}$$

Therefore, the components of the earth's rotation rate in the horizontal reference frame may be written

$$\omega_{EX_H} = -\omega_E \cos \lambda_g \cdot \sin AZ \tag{19a}$$

$$\omega_{EY_H} = \omega_E \cos \lambda_g \cdot \cos AZ \tag{19b}$$

$$\omega_{EZ_H} = \omega_E \sin \lambda_g \tag{19c}$$

To determine the general vector, $\vec{R}$, and displacement accelerations, the vehicle CG must be considered displaced from the horizontal reference frame by the vector, $\vec{R}$, as shown in figure 6.

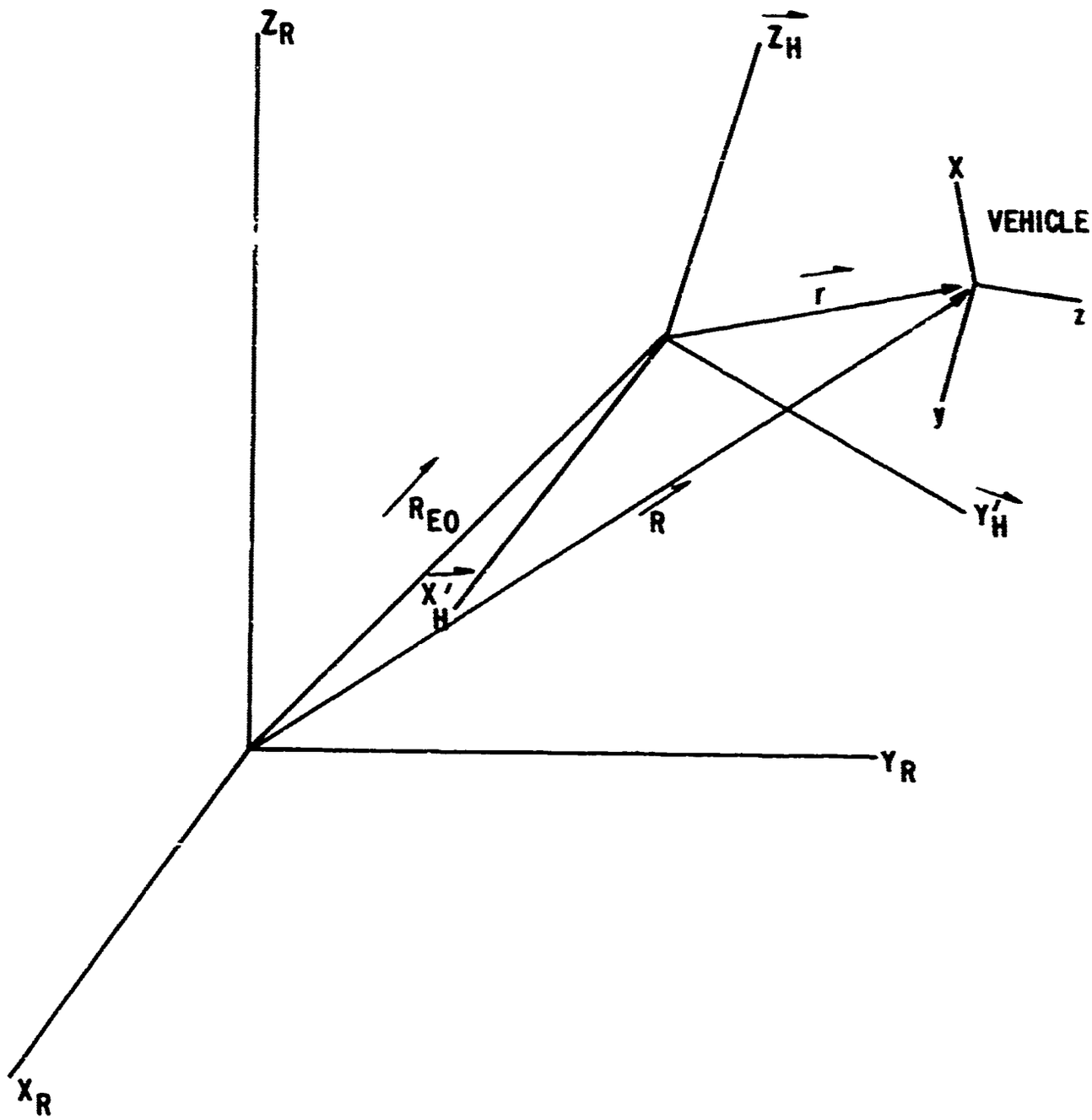

Figure 6. Inertial and Body Axis Coordinate Systems

From figure 6, the following relationship can be established:

$$\vec{R} = \vec{R}_{eo} + \vec{r} \tag{20}$$

$\vec{r}$ can be written in terms of its components on the horizontal reference frame as

$$\vec{r} = X\,\vec{X}'_H + Y\,\vec{Y}'_H + Z\,\vec{Z}_H \tag{21}$$

where X, Y, Z are the scalar vehicle CG displacement on the horizontal reference frame. $\vec{R}$ can now be written as

$$\vec{R} = X\,\vec{X}'_H + Y\,\vec{Y}'_H + Z\,\vec{Z}_H + \vec{R}_{eo} \tag{22}$$

Although $\vec{R}$ can be written in any reference frame, its vector components must be in the same reference frame. Therefore, the equation

$$\vec{R}_{eo} = R_{eo}\,\vec{Z}_c \tag{23}$$

must be written in terms of the horizontal reference system.

From figure 4, the vector, $\vec{Z}_c$, in the geocentric reference frame can be written in the form

$$\vec{Z}_c = \vec{Z}_H \cos\eta + \vec{Y}_H \cos\eta$$

or by substituting in equations (16b) and (16c), the following is obtained:

$$\vec{Z}_c = \vec{Z}_H \cos\eta + \vec{X}'_H \sin AZ \sin\eta - \vec{Y}'_H \cos AZ \sin\eta \tag{24}$$

Equation (23) can now be rewritten as

$$\vec{R}_{eo} = R_{eo} \sin AZ \sin\eta\,\vec{X}'_H - R_{eo} \cos AZ \sin\eta\,\vec{Y}'_H + R_{eo} \cos\eta\, Z_H \tag{25}$$

where components of R_{eo} in horizontal reference frame are

$$\begin{aligned} R_{XH} &= R_{eo} \sin AZ \sin\eta \\ R_{YH} &= -R_{eo} \cos AZ \sin\eta \\ R_{ZH} &= R_{eo} \cos\eta \end{aligned} \tag{26}$$

By substituting and collecting terms, the equation for $\vec{R}$ is

$$\vec{R} = \left(R_{xH} + X\right) \vec{X}'_H + \left(R_{yH} + Y\right) \vec{Y}'_H + \left(R_{zH} + Z\right) \vec{Z}_H \tag{27}$$

The vectors $\vec{R}$ and $\vec{\omega}_E$ have now been expressed in the horizontal reference frame. The development of equation (15) can proceed further by taking the first derivative of R, with respect to time, in the following general form for an inertial coordinate system:

$$\left(\frac{d\vec{R}}{dt}\right) = \left[\frac{d\vec{R}}{dt}\right] + \vec{\omega} \times \vec{R}$$

where

$\left[\frac{d\vec{R}}{dt}\right]$ is the derivative relative to the rotating reference system

$\left(\frac{d\vec{R}}{dt}\right)$ is the vehicle CG velocity vector with respect to the inertial reference frame (R)

Therefore,

$$\frac{d\vec{R}}{dt} = \left(\dot{R}_{xH} + \dot{X}\right) \vec{X}'_H + \left(\dot{R}_{yH} + \dot{Y}\right) \vec{Y}'_H + \left(\dot{R}_{zH} + \dot{Z}\right) \vec{Z}_H$$

$$+ \vec{\omega}_E \times \left[\left(\dot{R}_{xH} + \dot{X}\right) \vec{X}'_H + \left(\dot{R}_{yH} + \dot{Y}\right) \vec{Y}'_H + \left(\dot{R}_{zH} + \dot{Z}\right) \vec{Z}_H\right] \tag{28}$$

where a dot above the variable denotes first derivative with respect to time. The last term may be expanded in the following matrix form:

$$\vec{\omega}_E \times \vec{R} = \begin{vmatrix} \vec{X}'_H & \vec{Y}'_H & \vec{Z}'_H \\ \omega_{E_{xH}} & \omega_{E_{yH}} & \omega_{E_{zH}} \\ \left(R_{xH} + X\right) & \left(R_{yH} + Y\right) & \left(R_{zH} + Z\right) \end{vmatrix}$$

$$= \left[\omega_{E_{yH}} \left(R_{zH} + Z\right) - \omega_{E_{zH}} \left(R_{yH} + Y\right)\right] \vec{X}'_H + \left[\omega_{E_{zH}} \left(R_{xH} + X\right)\right.$$

$$\left. - \omega_{E_{xH}} \left(R_{zH} + Z\right)\right] \vec{Y}'_H + \left[\omega_{E_{xH}} \left(R_{yH} + Y\right) - \omega_{E_{yH}} \left(R_{xH} + X\right)\right] \vec{Z}_H$$

From this expanded form, the following equations can be established:

$$A = \omega_{E_{yH}} \left(R_{zH} + Z\right) - \omega_{E_{zH}} \left(R_{yH} + Y\right) \tag{29a}$$

$$B = \omega_{E_{zH}} \left(R_{xH} + X\right) - \omega_{E_{xH}} \left(R_{zH} + Z\right) \tag{29b}$$

$$C = \omega_{E_{xH}} \left(R_{yH} + Y\right) - \omega_{E_{yH}} \left(R_{xY} + X\right) \tag{29c}$$

Therefore, the velocity vector is

$$\frac{d\vec{R}}{dt} = (\dot{X} + A)\ \vec{X}'_H + (\dot{Y} + B)\ \vec{Y}'_H + (\dot{Z} + C)\ \vec{Z}_H \tag{30}$$

To obtain the acceleration, the second derivative of $\vec{R}$ with respect to time is taken

$$\frac{d^2\vec{R}}{dt^2} = (\ddot{X} + \dot{A})\ \vec{X}'_H + (\ddot{Y} + \dot{B})\ \vec{Y}'_H + (\ddot{Z} + \dot{C})\ \vec{Z}_H$$

$$+ \omega_E \times \left[(\dot{X} + A)\ \vec{X}'_H + (\dot{Y} + B)\ \vec{Y}'_H + (\dot{Z} + C)\ \vec{Z}_H\right] \tag{31}$$

where $\dot{A}$, $\dot{B}$, $\dot{C}$ are the derivatives of equations (29a), (29b), and (29c),

$$\dot{A} = \omega_{E_{yH}}\ \dot{Z} - \omega_{E_{zH}}\ \dot{Y} \tag{32a}$$

$$\dot{B} = \omega_{E_{zH}}\ \dot{X} - \omega_{E_{xH}}\ \dot{Z} \tag{32b}$$

$$\dot{C} = \omega_{E_{xH}}\ \dot{Y} - \omega_{E_{yH}}\ \dot{X} \tag{32c}$$

and the last term is expanded to give

$$\vec{\omega}_E \times \frac{d\vec{R}}{dt} = \begin{vmatrix} \vec{X}'_H & \vec{Y}'_H & \vec{Z}'_H \\ \omega_{E_{xH}} & \omega_{E_{yH}} & \omega_{E_{zH}} \\ (\dot{X} + A) & (\dot{Y} + B) & (\dot{Z} + C) \end{vmatrix}$$

$$= \left[\omega_{E_{yH}} (\dot{Z} + C) - \omega_{E_{zH}} (\dot{Y} + B)\right] \vec{X}'_H$$

$$+ \left[\omega_{E_{zH}} (\dot{X} + A) - \omega_{E_{xH}} (\dot{Z} + C)\right] \vec{Y}'_H$$

$$+ \left[\omega_{E_{xH}} (\dot{Y} + B) - \omega_{E_{yH}} (\dot{X} + A)\right] \vec{Z}'_H$$

By substituting the above into equation (31), the following is obtained for the acceleration

$$\frac{d^2\vec{R}}{dt^2} = \left[\ddot{X} + \omega_{E_{yH}} \dot{Z} - \omega_{E_{zH}} \dot{Y} + \omega_{E_{yH}} (\dot{Z} + C) - \omega_{E_{zH}} (\dot{Y} + B)\right] \vec{X}'_H$$

$$+ \left[\ddot{Y} + \omega_{E_{zH}} \dot{X} - \omega_{E_{xH}} \dot{Z} + \omega_{E_{zH}} (\dot{X} + A) - \omega_{E_{xH}} (\dot{Z} + C)\right] \vec{Y}'_H$$

$$+ \left[\ddot{Z} + \omega_{E_{xH}} \dot{Y} - \omega_{E_{yH}} \dot{X} + \omega_{E_{xH}} (\dot{Y} + B) - \omega_{E_{yH}} (\dot{X} + A)\right] \vec{Z}'_H \quad (33)$$

By collecting terms and reducing equation (33), the final development of vehicle acceleration with respect to the horizontal reference frame is

$$\frac{d^2\vec{R}}{dt^2} = \left(\ddot{X} + 2\dot{A} + \omega_{E_{yH}} C - \omega_{E_{yH}} B\right) X'_H$$

$$+ \left(\ddot{Y} + 2\dot{B} + \omega_{E_{zH}} A - \omega_{E_{xH}} C \right) \vec{Y}'_H$$

$$+ \left(\ddot{Z} + 2\dot{C} + \omega_{E_{xH}} B - \omega_{E_{yH}} A \right) \vec{Z}_H \qquad (34)$$

or in component form in the horizontal reference frame,

$$a_x = \ddot{X} + 2\dot{A} + \omega_{E_{yH}} C - \omega_{E_{zH}} B \qquad (35a)$$

$$a_y = \ddot{Y} + 2\dot{B} + \omega_{E_{zH}} A - \omega_{E_{xH}} C \qquad (35b)$$

$$a_z = \ddot{Z} + 2\dot{C} + \omega_{E_{xH}} B - \omega_{E_{yH}} A \qquad (35c)$$

This completes the derivation of the acceleration equations, which includes coriolis and centripetal acceleration due to rotation of the coordinate system, and accelerations of the vehicle CG due to forces and moments.

To complete the equations of motion, it will be necessary to introduce the forces and moments acting on the vehicle. These forces and moments result mainly, for this program, from gravitational attraction, and from reaction of the air on the vehicle as a result of its motion. This is not to say other types of forces cannot be involved.

c. Earth Position Coordinates

Since the components of the gravitational force are dependent upon the position of the vehicle in the earth coordinate system, the instantaneous longitude and geocentric latitude can be obtained by the following method.

From equation (6) and reference 9, the geocentric latitude is

$$\lambda_c = \arcsin \frac{Z_E}{R_{EQ}}$$

and the longitude is

$$\beta = \arctan \frac{Y_E}{X_E}$$

where X_E, Y_E, and Z_Σ are coordinates in the earth reference system.

This program expresses the vehicle position in the horizontal reference frame; therefore, the position must be transformed to the earth reference frame. This can be done through examination of figures 2, 5, and 6, and the following transformation matrixes.

The order of transformation will be from X_H', Y_H', Z_H' to X_H, Y_H, and Z_H, to X_E, Y_E, and Z_E.

Therefore,

$$X_H = X_H' \sin AZ - Y_H' \cos AZ$$

$$Y_H = X_H' \cos AZ + Y_H' \sin AZ$$

$$Z_H = Z_H' \tag{36a}$$

or in matrix form

$$\begin{bmatrix} X_H \\ Y_H \\ Z_H \end{bmatrix} = \begin{bmatrix} \sin AZ & (-\cos AZ) & 0 \\ \cos AZ & \sin AZ & 0 \\ 0 & 0 & 1 \end{bmatrix} \cdot \begin{bmatrix} X_H' \\ Y_H' \\ Z_H' \end{bmatrix} \tag{36b}$$

and

$$X_E = X_H \sin \lambda_g + Z_H \cos \lambda_g$$

$$Y_E = Y_H$$

$$Z_E = -X_H \cos \lambda_g + Z_H \sin \lambda g \tag{37a}$$

from which the following matrix is formed:

$$\begin{bmatrix} X_e \\ Y_e \\ Z_e \end{bmatrix} = \begin{bmatrix} \sin\lambda_g & 0 & \cos\lambda_g \\ 0 & 1 & 0 \\ -\cos\lambda_g & 0 & \sin\lambda_g \end{bmatrix} \cdot \begin{bmatrix} X_H \\ Y_H \\ Z_H \end{bmatrix} \tag{37b}$$

By substituting equation (36b) into equation (37b)

$$\begin{bmatrix} X_e \\ Y_e \\ Z_e \end{bmatrix} = \begin{bmatrix} \sin\lambda_g & 0 & \cos\lambda_g \\ 0 & 1 & 0 \\ -\cos\lambda_g & 0 & \sin\lambda_g \end{bmatrix} \cdot \begin{bmatrix} \sin AZ & (-\cos AZ) & 0 \\ \cos AZ & \sin AZ & 0 \\ 0 & 0 & 1 \end{bmatrix} \cdot \begin{bmatrix} X'_H \\ Y'_H \\ Z'_H \end{bmatrix} \tag{38}$$

and expanding equation (38),

$$\begin{bmatrix} X_e \\ Y_e \\ Z_e \end{bmatrix} = \begin{bmatrix} \left(\sin\lambda_g \sin AZ\right) & \left(-\sin\lambda_g \cos AZ\right) & \cos\lambda_g \\ \cos AZ & \sin AZ & 0 \\ \left(-\cos\lambda_g \sin AZ\right) & \left(\cos\lambda_g \cos AZ\right) & \cos\lambda_g \end{bmatrix} \cdot \begin{bmatrix} X'_H \\ Y'_H \\ Z'_H \end{bmatrix} \tag{39}$$

From equation (39)

$$X_E = X'_H \left(\sin\lambda_g \sin AZ\right) - Y'_H \left(\sin\lambda_g \cos AZ\right) + Z'_H \cos\lambda_g \tag{40a}$$

$$Y_E = X'_H \cos AZ + Y'_H \sin AZ \tag{40b}$$

$$Z_E = -X'_H \left(\cos\lambda_g \sin AZ\right) + Y'_H \left(\cos\lambda_g \cos AZ\right) + Z'_H \sin\lambda_g \tag{40c}$$

where

$$X'_H = R_{xH} + X$$

$$Y'_H = R_{yH} + Y$$

$$Z'_H = R_{zH} + Z$$

R_{xH}, R_{yH}, and R_{zH} are defined by equation (26). Therefore, the instantaneous geocentric latitude can be obtained from

$$\lambda_c = \arcsin\left(\frac{Z_E}{R}\right) \tag{41}$$

where

$$R = \left[\left(R_{xH} + X\right)^2 + \left(R_{yH} + Y\right)^2 + \left(R_{zH} + Z\right)^2\right]^{1/2}$$

since the earth is assumed to be a body of revolution about the polar axis, the instantaneous longitude may be defined as

$$\beta = \arctan\left(\frac{Y_E}{X_E}\right) \tag{42}$$

and will be considered positive when measured east from the prime meridian and negative when measured west.

d. Gravitational Equations

The potential function and equations used to obtain the gravitational forces to be included in the equations of motion are presented in this subsection. The gravitational potential of the earth is an expansion of spherical harmonics as a function of latitude and longitude. However, in this program, the earth is assumed to be a body of revolution so that the longitudinal effects may be ignored. Although some satellite data indicate that the earth's equator is elliptical where the major axis is somewhat larger than the minor axis, the difference though is very small compared to the equatorial radius.

The gravity components are determined by taking partial derivatives of the gravitational potential equation (Ref. 9).

$$\begin{aligned}\Phi(R,\lambda) = \frac{-G_o M_o}{R}\Bigg[1 &+ \frac{J}{3}\left(\frac{R_{EQ}}{R}\right)^2\left(1 - 3\sin^2\lambda_c\right) \\ &+ \frac{H}{5}\left(\frac{R_{EQ}}{R}\right)^3\left(3\sin\lambda_c - 5\sin^3\lambda_c\right) \\ &+ \frac{K}{30}\left(\frac{R_{EQ}}{R}\right)^4\left(3 - 30\sin^2\lambda_c + 35\sin^4\lambda_c\right) + \ldots\Bigg]\end{aligned} \tag{43}$$

where

G_oM_o = 1.4076427×10^{16} ft^3/sec^2 gravitational constant of the earth

R = radial distance to body CG from earth's geocenter

R_{EQ} = earth's equatorial radius

λ_c = geocentric latitude

$J = 1623.41 \times 10^{-6}$, coefficient of the second harmonic

$H = 6.04 \times 10^{-6}$, coefficient of the third harmonic

$K = 6.37 \times 10^{-6}$, coefficient of the fourth harmonic

The gravitational potential field is usually defined by spherical harmonics. Each higher order term in equation (43) is due to a deviation of the potential from that of a true sphere. Therefore, the potential is expressed as a series of Legendre polynomials in the variable, λ_c. Many analyses (Refs. 9, 11, 12) consider only the second-, third-, and fourth-order terms. The first harmonic $\left(R_{EQ}/R\right)$ is missing because of the choice of an equatorial coordinate system in which λ_c is measured relative to the center of the earth. The fifth harmonic is not sufficiently well known to justify its inclusion in this equation.

The gravitational acceleration of a vehicle along any line is the partial derivative of the potential function, ϕ, along that line. See figure 7.

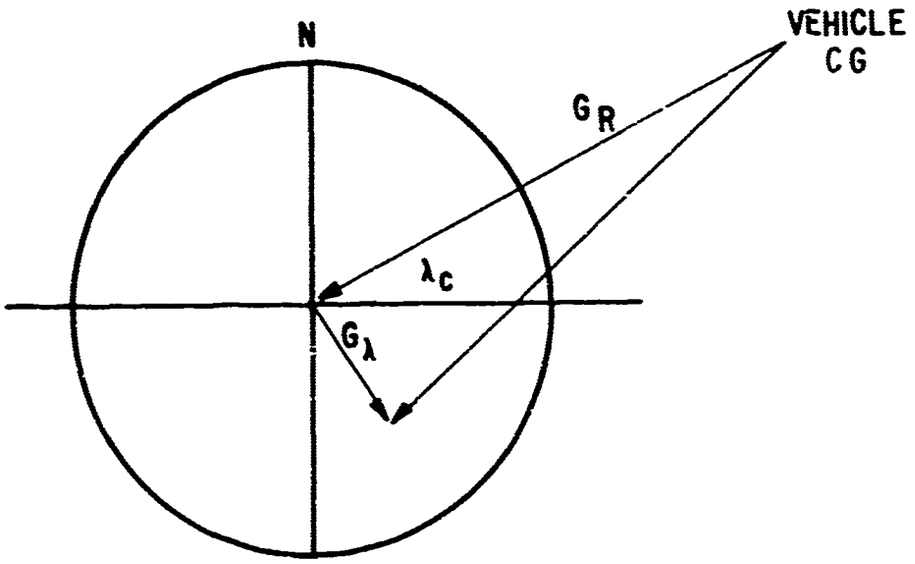

Figure 7. Gravitational Direction

$\vec{g}$ is related to $\Phi\left(R, \lambda_c\right)$ by

$$\vec{g} = -\nabla\Phi\left(R, \lambda_c\right)$$

where $\nabla\Phi$ is the gradient vector of $\Phi\left(R, \lambda_c\right)$. From figure 7, the force along the radius, R, is

$$G_r = mg_r = -m \frac{\partial\Phi\left(R,\lambda_c\right)}{\partial R}$$

and in R, λ_c direction

$$G_\lambda = mg_{\lambda c} = -\frac{m}{R} \frac{\partial\Phi\left(R,\lambda_c\right)}{\partial\lambda_c}$$

where m = mass of vehicle in slugs. From equation (43), G_R and $G\lambda_c$ are obtained.

$$G_R = -m \frac{\partial\Phi}{\partial R} = +m\, G_o M_o \left[-\frac{1}{R^2} - \frac{3J}{3}\left(\frac{R_{EQ}^{\;2}}{R^4}\right)\left(1 - 3\sin^2\lambda_c\right) \right.$$

$$- \frac{4}{5} H \left(\frac{R_{EQ}^{\;3}}{R^5}\right)\left(3\sin\lambda_c - 5\sin^3\lambda_c\right)$$

$$\left. - \frac{5K}{30}\left(\frac{R_{EQ}^{\;4}}{R^6}\right)\left(3 - 30\sin^2\lambda_c + 35\sin^4\lambda_c\right) \right]$$

$$G\lambda_c = -\frac{m}{R}\frac{\partial\Phi}{\partial\lambda_c} = \frac{+mG_oM_o}{R^2} \left[\frac{J}{3}\left(\frac{R_{EQ}^{\;2}}{R^2}\right)\left(-6\sin\lambda_c\cos\lambda_c\right) \right.$$

$$+ \frac{H}{5}\left(\frac{R_{EQ}^{\;3}}{R^3}\right)\left(3\cos\lambda_c - 15\sin^2\lambda_c\cos\lambda_c\right)$$

$$\left. + \frac{K}{30}\left(\frac{R_{EQ}^{\;4}}{R^4}\right)\left(-60\sin\lambda_c\cos\lambda_c + 140\sin^3\lambda_c\cos\lambda_c\right) \right]$$

simplifying and dividing through by m,

$$G_R = -\frac{G_o M_o}{R^2}\left[1 + J\left(\frac{R_{EQ}}{R}\right)^2\left(1 - 3\sin^2\lambda_c\right)\right.$$

$$+ \frac{4H}{5}\left(\frac{R_{EQ}}{R}\right)^3\left(3\sin\lambda_c - 5\sin^3\lambda_c\right)$$

$$\left. + \frac{K}{6}\left(\frac{R_{EQ}}{R}\right)^4\left(3 - 30\sin^2\lambda_c + 35\sin^4\lambda_c\right)\right] \tag{44a}$$

$$G\lambda_c = -\frac{G_o M_o}{R^2}\left[-2J\left(\frac{R_{EQ}}{R}\right)^2\left(\sin\lambda_c\cos\lambda_c\right)\right.$$

$$+ \frac{3H}{5}\left(\frac{R_{EQ}}{R}\right)^3\left(\cos\lambda_c - 5\sin^2\lambda_c\cos\lambda_c\right)$$

$$\left. + \frac{2K}{3}\left(\frac{R_{EQ}}{R}\right)^4\left(-3\sin\lambda_c\cos\lambda_c + 7\sin^3\lambda_c\cos\lambda_c\right)\right] \tag{44b}$$

Since G_R is along the radius $\vec{R}$ and $G\lambda_c$ is perpendicular to $\vec{R}$, they are in the inertial reference frame. For them to be included in the equations of motion, their components must be found with respect to the horizontal reference frame. This can be accomplished by the use of direction cosines and transformation matrices.

After examination of figure 8, the following series of equations can be written to transpose G_R and $G\lambda_c$ to the horizontal reference frame.

It is noted that G_R and $G\lambda$ are taken as positive in the direction shown in figures 7 and 8. Therefore, by definition

$$GR = +\frac{\partial\phi}{\partial R}$$

$$G\lambda = +\frac{1}{R}\frac{\partial\phi}{\partial R}$$

$$G\beta = 0 \tag{45}$$

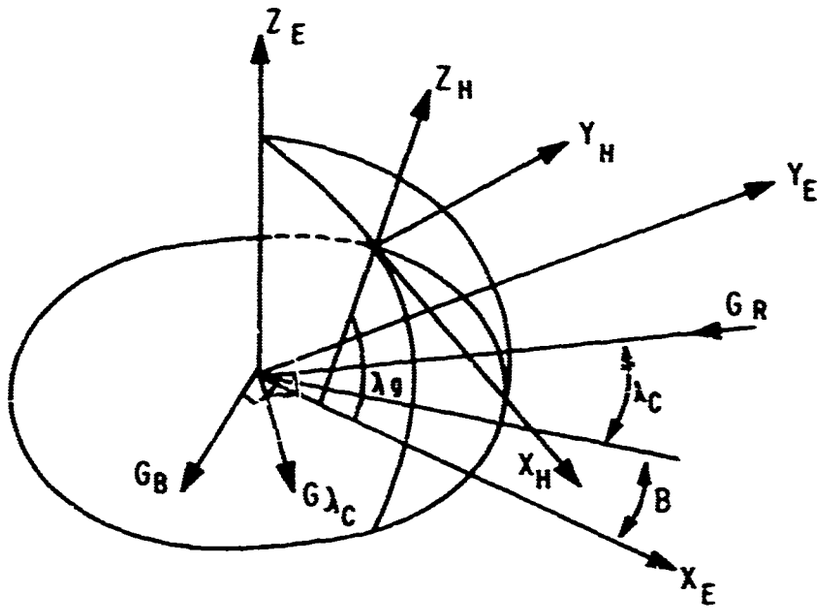

Figure 8. Gravitational Transformations

$$GX_E = -GR\left(\cos\lambda_c \cos B\right) + G\lambda\left(\sin\lambda_c \cos B\right) + GB \sin B$$

$$GY_E = -GR\left(\cos\lambda_c \sin B\right) + G\lambda\left(\sin\lambda_c \sin B\right) - GB \cos B$$

$$GZ_E = -GR \sin\lambda_c - G\lambda \cos\lambda_c \tag{46}$$

$$GX_H = GX_E \sin\lambda_g - GZ_E \cos\lambda_g$$

$$GY_H = GY_E$$

$$GZ_H = GX_E \cos\lambda_g + GZ_E \sin\lambda_g \tag{47}$$

From equations (16a), (16b), and (16c), the following is obtained:

$$GX'_H = GX_H \sin AZ + GY_H \cos AZ$$

$$GY'_H = -GX_H \cos AZ + GY_H \sin AZ$$

$$GZ'_H = GZ_H \tag{48}$$

Equations (46) and (47) can be expressed in matrix form

$$\begin{bmatrix} GX_H \\ GY_H \\ GZ_H \end{bmatrix} = \begin{bmatrix} \left(-\sin\lambda_g \cos\lambda_c \cos\beta + \cos\lambda_g \sin\lambda_c\right) & \left(\sin\lambda_g \sin\beta\right) \\ \left(-\cos\lambda_c \sin\beta\right) & \left(\sin\lambda_c \sin\beta\right) & (-\cos\beta) \\ \left(-\cos\lambda_g \cos\lambda_c \cos\beta - \sin\lambda_g \sin\lambda_c\right) & \left(\sin\lambda_g \sin\lambda_c \cos\beta + \cos\lambda_g \cos\lambda_c\right) & \left(\cos\lambda_g \sin\beta\right) \end{bmatrix} \cdot \begin{bmatrix} GR \\ G\lambda \\ G\beta \end{bmatrix} \tag{49}$$

This matrix may be written into the following equations for transformation:

$$\begin{aligned}
G11 &= -\sin\lambda_g \cos\lambda_c \cos\beta + \cos\lambda_g \sin\lambda_c \\
G12 &= \sin\lambda_g \sin\lambda_c \cos\beta + \cos\lambda_g \cos\lambda_c \\
G21 &= -\cos\lambda_c \sin\beta \\
G22 &= \sin\lambda_c \sin\beta \\
G31 &= -\cos\lambda_g \cos\lambda_c \cos\beta - \sin\lambda_g \sin\lambda_c \\
G32 &= +\cos\lambda_g \sin\lambda_c \cos\beta - \sin\lambda_g \cos\lambda_c
\end{aligned} \tag{50}$$

The final transformation is obtained by substituting equation (49) into equation (48).

$$\begin{aligned}
GX'_H &= GR\ (G11 \cdot \sin AZ + G21 \cdot \cos AZ) \\
&\quad + G\lambda\ (G12 \cdot \sin AZ + G22 \cdot \cos AZ) \\
GY'_H &= GR\ (-G11 \cdot \cos AZ + G21 \cdot \sin AZ) \\
&\quad + G\lambda\ (-G12 \cdot \cos AZ + G22 \cdot \sin AZ) \\
GZ'_H &= GZ_H = GR\ (G31) + G\lambda\ (G32)
\end{aligned} \tag{51}$$

The components of the gravitational forces are now expressed in the horizontal reference frame and may be included with equations (35) to complete the equations of motion.

Before the aerodynamic forces and moments can be resolved, a method must be established for the transformation of components from the body reference frame to the horizontal reference frame and the inverse.

e. Euler Angles

Up to this point, only the equations for the three-translational degrees-of-freedom have been derived. This establishes the vehicle CG with respect to a horizontal reference system. To analyze the body forces and moments as a result of its motion about the CG, the angular orientation of the vehicle must be known with respect to the horizontal reference system.

The Euler angles describing the angular motion are ϕ, θ, and ψ, and will be noted as pitch, yaw, and roll angles, respectively. These angles are to be differentiated from the angles of attack and sideslip. The angles of attack and sideslip have a kinematic definition based on the components of the free-stream velocity relative to the body axes of the vehicle. The angular displacements, ϕ, θ, and ψ, on the other hand, are used to measure the vehicle attitude with respect to a fixed set of axes (X, Y, and Z), and in no way require motion of the vehicle relative to the surrounding air for their definition.

Consider a vehicle moving with respect to the inertial axes X, Y, and Z which are also fixed in space. The following will describe one of several ways of specifying the angular orientation of a vehicle at any instant of time. This will be done by successively pitching, yawing, and rolling the X, Y, and Z axes until they coincide with the axes x, y, and z of the vehicle as shown in figure 9.

First, pitch the vehicle by an angular displacement ϕ around OX so that Z goes to Z_1 and Y goes to Y_1 (figure 9a). The relationship between the two coordinate systems is then given by the following transfer matrix:

$$\begin{bmatrix} X_1 \\ Y_1 \\ Z_1 \end{bmatrix} = \begin{bmatrix} 1 & 0 & 0 \\ 0 & \cos\phi & -\sin\phi \\ 0 & \sin\phi & \cos\phi \end{bmatrix} \cdot \begin{bmatrix} X \\ Y \\ Z \end{bmatrix} \tag{52}$$

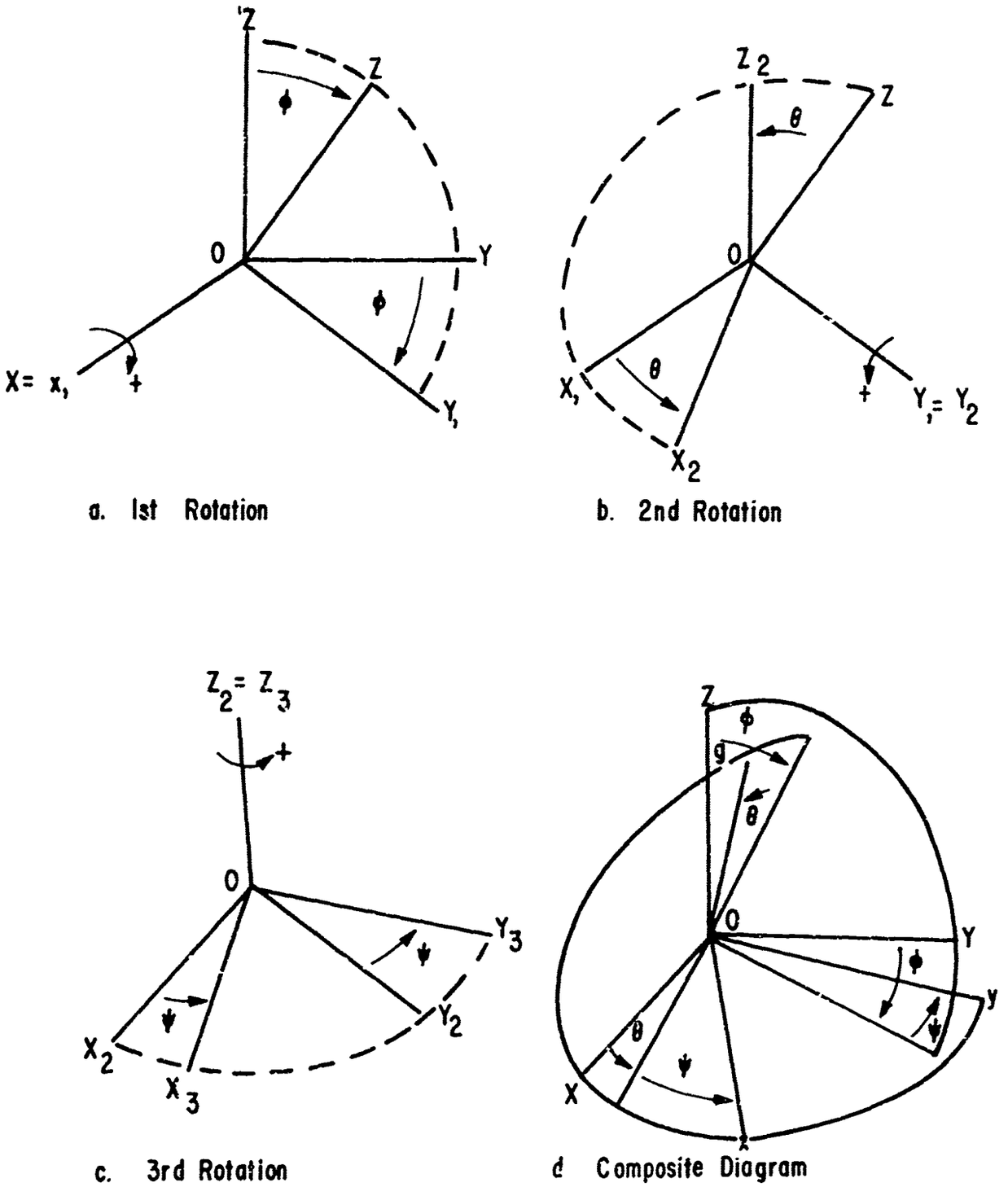

Figure 9. System of Angular Displacements

Next, yaw the vehicle by an angle θ about the OY_1 axes so that X_1 goes to X_2 and Z_1 to Z_2 (figure 9b). The new relationship is given by the transfer matrix

$$\begin{bmatrix} X_2 \\ Y_2 \\ Z_2 \end{bmatrix} = \begin{bmatrix} \cos\theta & 0 & -\sin\theta \\ 0 & 1 & 0 \\ \sin\theta & 0 & \cos\theta \end{bmatrix} \cdot \begin{bmatrix} X_1 \\ Y_1 \\ Z_1 \end{bmatrix} \tag{53}$$

Finally, roll the vehicle by angle ψ around the OZ_2 axis so that X_2 moves to X_3, and Y_2 to Y_3 (figure 9c). The transfer matrix for this rotation is

$$\begin{bmatrix} x \\ y \\ z \end{bmatrix} \begin{bmatrix} \cos\psi & \sin\psi & 0 \\ -\sin\psi & \cos\psi & 0 \\ 0 & 0 & 1 \end{bmatrix} \cdot \begin{bmatrix} X_2 \\ Y_2 \\ Z_2 \end{bmatrix} \tag{54}$$

where

$$x = X_3$$

$$y = Y_3$$

$$z = Z_3$$

The operations of pitch, yaw, and roll for this program must always be performed in this order since angular displacements do not follow the ordinary laws of vector addition, but, in fact, follow a noncommutative law. Under this system of rotations, the direction cosines of the finial vehicle axes x, y, and z to the fixed axis X, Y, and Z are obtained by substituting equation (52) into equations (53).

$$\begin{bmatrix} X_2 \\ Y_2 \\ Z_2 \end{bmatrix} = \begin{bmatrix} \cos\theta & (-\sin\theta\sin\phi) & (-\sin\theta\cos\phi) \\ 0 & \cos\phi & -\sin\phi \\ \sin\theta & (\sin\phi\cos\theta) & (\cos\phi\cos\theta) \end{bmatrix} \cdot \begin{bmatrix} X \\ Y \\ Z \end{bmatrix} \tag{55}$$

Then substitute equation (54) into equation (55)

$$\begin{bmatrix} x \\ y \\ z \end{bmatrix} = \begin{bmatrix} (\cos\psi\cos\theta) & (-\sin\theta\sin\phi\cos\psi + \sin\psi\cos\theta) & (-\sin\theta\cos\phi\cos\psi - \sin\psi\sin\phi) \\ (-\sin\psi\cos\theta) & (\sin\theta\sin\phi\sin\psi + \cos\psi\cos\phi) & (\sin\psi\sin\theta\cos\phi - \sin\phi\cos\psi) \\ \sin\theta & (\cos\theta\sin\phi) & (\cos\theta\cos\phi) \end{bmatrix} \begin{bmatrix} X \\ Y \\ Z \end{bmatrix} \qquad (56)$$

Therefore, equation (56) will transform components from the fixed axes or horizontal reference system to the vehicle or body reference system. To transform components from the vehicle axes to the horizontal references axes, the matrix of equation (56) must be inverted by interchanging rows and columns. The elements of equation (56) may be written for simplicity as follows, where subscripts indicate rows and columns.

$$\begin{aligned}
A_{11} &= \cos\theta\cos\psi \\
A_{12} &= -\sin\theta\sin\phi\cos\psi + \sin\psi\cos\theta \\
A_{13} &= -\sin\theta\cos\phi\cos\psi - \sin\psi\sin\phi \\
A_{21} &= -\sin\psi\cos\theta \\
A_{22} &= \sin\theta\sin\phi\sin\psi + \cos\psi\cos\phi \\
A_{23} &= \sin\psi\sin\theta\cos\phi - \sin\phi\cos\psi \\
A_{31} &= \sin\theta \\
A_{32} &= \cos\theta\sin\phi \\
A_{33} &\quad \cos\theta\cos\phi
\end{aligned} \qquad (57)$$

f. Transformation of Angular Velocities

It is now necessary to express the angular velocities ω_x, ω_y, and ω_z with respect to the vehicle axes in terms of the Euler angles.

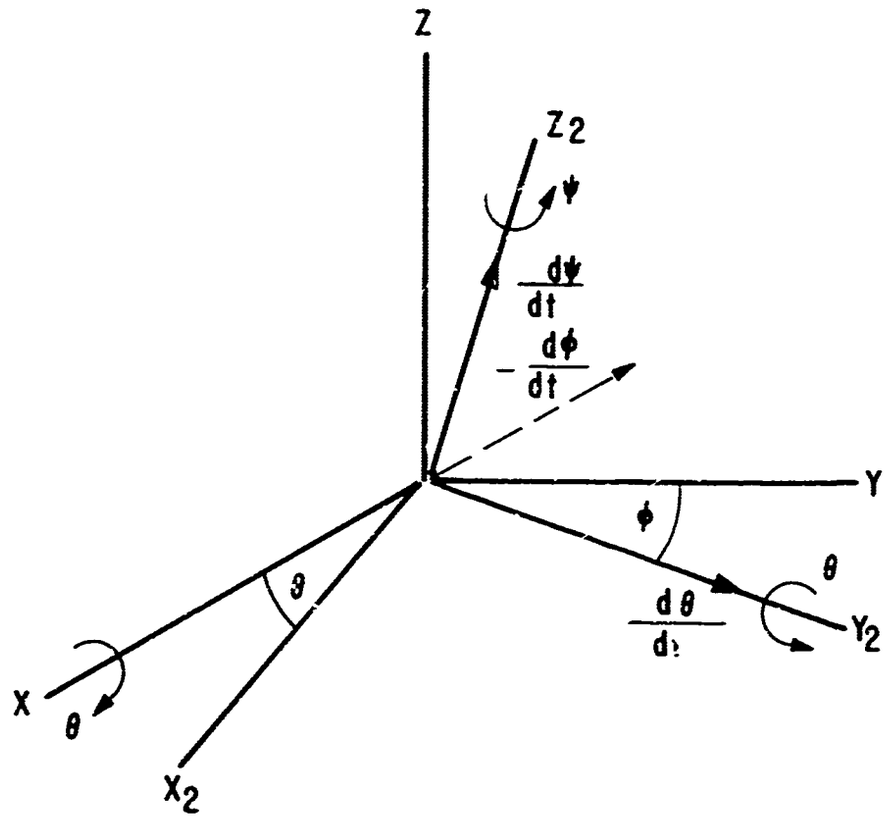

Figure 10. Angular Velocities of Euler Angles

The components of the angular velocities along the X_2, Y_2, and Z_2 axes to the vehicle axes x, y, and z shown in figure 10 are

$$\omega_x = \frac{-d\phi}{dt} \cos \theta \cos \psi + \frac{d\theta}{dt} \sin \psi$$

$$\omega_y = \frac{d\phi}{dt} \cos \theta \sin \psi + \frac{d\theta}{dt} \cos \psi$$

$$\omega_z = \frac{-d\phi}{dt} \sin \theta + \frac{d\psi}{dt} \tag{58}$$

The equations in section II-2e and equation (56) have been derived with respect to the inertial axes X, Y, and Z. If the axes system is allowed to rotate, the angular velocity of the earth ω_E must be included. Therefore, the inertial angular rates of the vehicle are

$$\Omega_x = \omega_X + \omega_{E_{XH}}$$

$$\Omega_y = \omega_Y + \omega_{E_{YH}}$$

$$\Omega_z = \omega_Z + \omega_{E_{ZH}} \tag{59}$$

where $\omega_{E_{xH}}$, $\omega_{E_{yH}}$, and $\omega_{E_{zH}}$ are defined by equation (19). These are the components of the earth's rotation rate in the horizontal reference frame.

Since this program was written for a symmetrical cone with uniform weight distribution and further assumes symmetrical ablation, then the products of inertia will be zero regardless of roll angle, ψ. (This will be shown in section II-2g.) Therefore, the roll and transverse moment of inertia can be obtained independent of ψ. This will simplify the equations and allow the angular momentum, $\vec{h}_o$, to be written in the second rotation.

Therefore, equation (58) can be simplified and written in the X_2, Y_2, and Z_2 axes as

$$\omega_{x2} = -\frac{d\phi}{dt}\cos\theta$$

$$\omega_{y2} = \frac{d\theta}{dt}$$

$$\omega_{z2} = -\frac{d\phi}{dt}\sin\theta + \frac{d\psi}{dt} \tag{60}$$

which are the total rotation rates of the vehicle in the second rotated axes.

Now $\omega_{E_{xH}}$, $\omega_{E_{xH}}$, and $\omega_{E_{zH}}$ must also be written in the same axes system as the vehicle angular rates. This can be done by using the transformation equation (55), which will result in

$$\omega_{E_{x_2}} = \omega_{E_{x_H}}\cos\theta - \omega_{E_{y_H}}\sin\theta\sin\phi - \omega_{E_{z_H}}\sin\theta\cos\phi$$

$$\omega_{E_{y_2}} = 0 + \omega_{E_{y_H}}\cos\phi - \omega_{E_{z_H}}\sin\phi$$

$$\omega_{E_{z_2}} = \omega_{E_{x_H}}\sin\theta + \omega_{E_{y_H}}\sin\phi\cos\theta + \omega_{E_{z_H}}\cos\phi\cos\theta \tag{61}$$

Therefore, equation (59) can be written as

$$\Omega_x = \omega_{x_2} + \omega_{Ex_2}$$

$$\Omega_y = \omega_{y_2} + \omega_{Ey_2}$$

$$\Omega_z = \omega_{z_2} + \omega_{Ez_2} \tag{62}$$

which are the inertial angular velocities of the vehicle in the X_2, Y_2, and Z_2 axes.

Since equation (62) is written in the second rotated axes system, it is also necessary to have the angular velocity of that coordinate system. Therefore,

$$\Omega_{x_2} = -\frac{d\phi}{dt}\cos\theta + \omega_{E_{X_2}}$$

$$\Omega_{y_2} = \frac{d\theta}{dt} + \omega_{E_{Y_2}}$$

$$\Omega_{z_2} = -\frac{d\phi}{dt}\sin\theta + \omega_{E_{Z_2}} \tag{63}$$

which completes the transformation of angular velocities.

g. Moment of Momentum

A particle of mass, m, moving with velocity, $\dot{\vec{R}}$, figure 11, has a linear momentum (Ref. 13)

$$\vec{P} = m\,\dot{\vec{R}}$$

The moment of this linear momentum about an arbitrary point, O, is defined as

$$\vec{h}_o = \vec{r} \times m\,\dot{\vec{R}} \tag{64}$$

where

$\dot{\vec{R}}$ = absolute velocity of m

$\vec{r}$ = radius drawn from O as shown in figure 11

$\vec{h}_o$ = the angular momentum of the particle about the point O

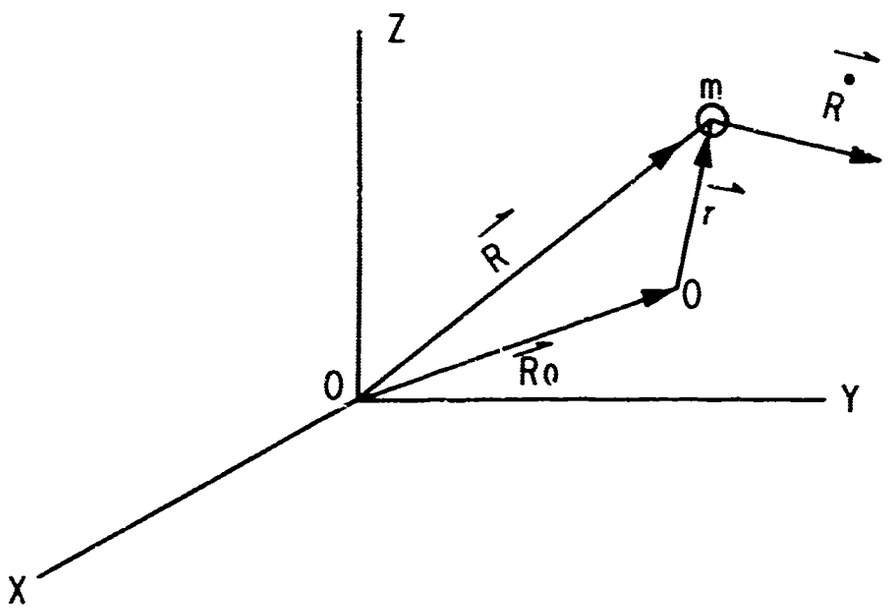

Figure 11. Moment of Momentum about 0

The angular momentum of a rigid body, figure 12, about any axis perpendicular to the plane of motion and passing through the point 0 fixed in a moving body is the sum of the moments of the linear momenta of all its particles about the axis. Therefore, equation (64) can be rewritten as

$$\vec{h}_o = \sum_i \vec{r}_i \times m \vec{v}_i$$

where $\vec{v}_i$ = velocity of any point i on the body. The velocity of a representative particle of mass m_i may be expressed in terms of the velocity of 0 plus the velocity of m_i with respect to 0.

$$\vec{v}_i = \vec{v}_o + \vec{\omega} \times \vec{r}_i$$

Therefore,

$$\vec{h}_o = \sum_i \vec{r}_i \times m_i \left(\vec{v}_o + \vec{\omega} \times \vec{r}_i\right)$$

or is expanded from

$$\vec{h}_o = \sum_i \vec{r}_i \times \left(\vec{\omega} \times \vec{r}_i\right) m_i - \vec{v}_o \times \sum_i m_i \vec{r}_i$$

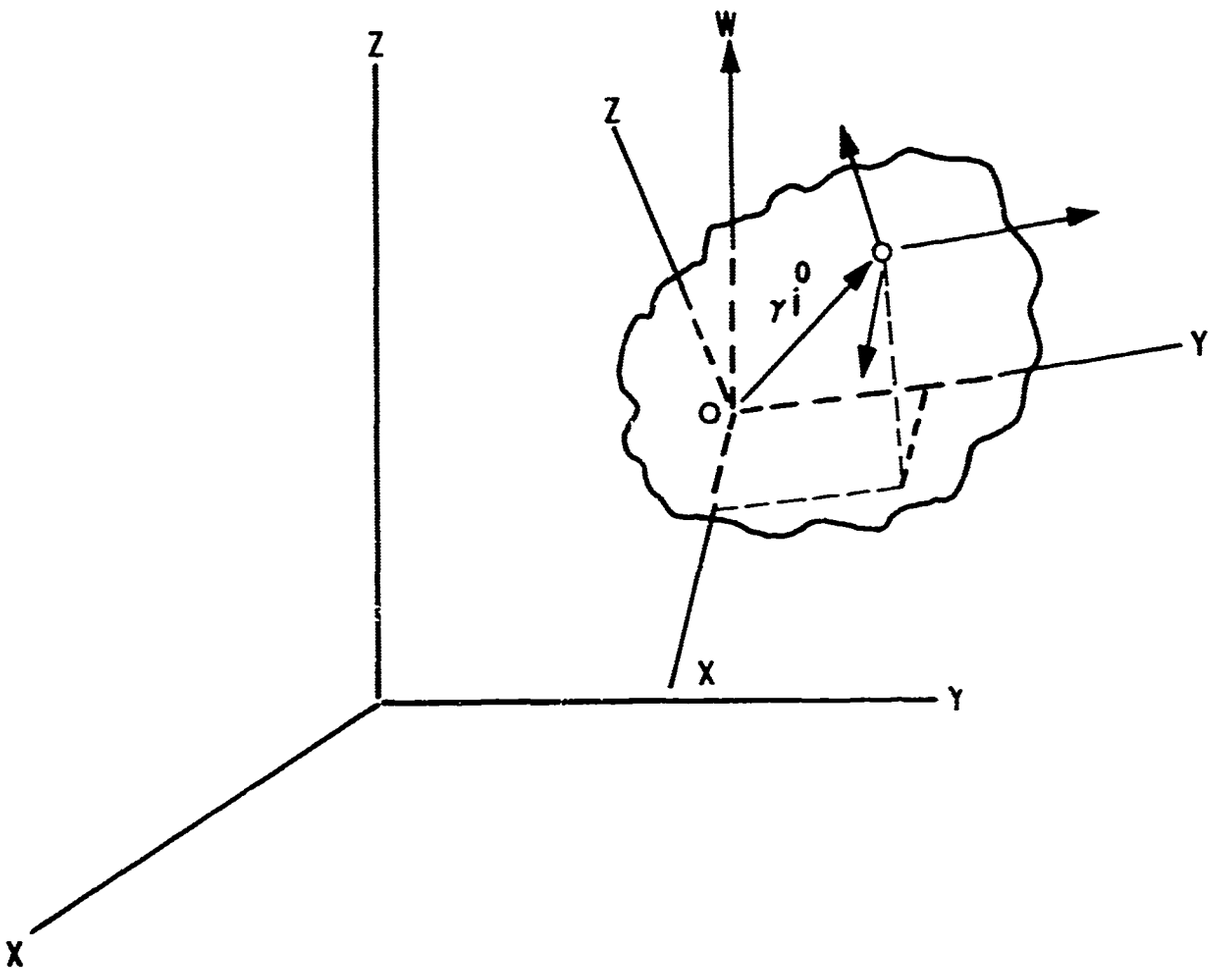

Figure 12. Components of Momentum

If, by definition, 0 coincides with the center of mass, the term $\sum_i m_i \dot{r}_i$ is equal to zero, the angular momentum can be expressed by the following integral

$$\vec{h}_o = \int \vec{r} \times (\vec{\omega} \times \vec{r})\, dm \tag{65}$$

The relation between the angular momentum of a body and the applied moments, $\vec{M}_o$, of the forces $\sum \vec{F} = m\ddot{\vec{R}}$ acting on m is obtained from rotational equation of motion.

$$\vec{M}_o = \sum \dot{r} \times m\ddot{\vec{R}} \tag{66}$$

Taking the second derivative of the expression

$$\vec{R} = \vec{R}_o + \vec{r}$$

and substituting into equation (66)

$$\vec{M}_o = \sum \vec{r} \times m \left(\ddot{\vec{R}}_o + \ddot{\vec{r}}\right)$$

or

$$\vec{M}_o = \sum \frac{d}{dt} (\vec{r} \times m \dot{\vec{r}}) - \ddot{\vec{R}}_o \times \sum m\vec{r} \qquad (67)$$

Again $\sum mr = 0$ when 0 coincides with center of mass. Equation (67) reduces to

$$\vec{M}_o = \sum \frac{d}{dt} (\vec{r} \times m \dot{\vec{r}}) \qquad (68)$$

but $\dot{\vec{r}}$ is equal to the following:

$$\dot{\vec{r}} = \left(\frac{d\vec{r}}{dt}\right) = \left[\frac{d\vec{r}}{dt}\right] + \vec{\omega} \times \vec{r}$$

where

$\left(\frac{d\vec{r}}{dt}\right)$ = total derivative relative to inertial axis

$\left[\frac{d\vec{r}}{dt}\right]$ = derivative relative to rotating axis and, since body is rigid, is equal to zero

Therefore,

$$\dot{\vec{r}} = \vec{\omega} \times \vec{r}$$

and substituting into equation (67) the relationship between $\vec{M}_o$ and $\dot{\vec{h}}_o$ is established.

$$\vec{M}_o = \frac{d}{dt}\left(\vec{r} \times m (\vec{\omega} \times \vec{r})\right) \qquad (69)$$

or

$$\vec{M}_o = \frac{d\,\vec{h}_o}{dt} \tag{70}$$

With this relationship established, the derivation of $\vec{h}_o$ can be continued. The integral in equation (65) must be evaluated and this is done by first expanding the cross product $\vec{\omega} \times \vec{r}$

$$\vec{\omega} \times \vec{r} = \begin{vmatrix} \vec{i} & \vec{j} & \vec{k} \\ \Omega_x & \Omega_y & \Omega_z \\ x & y & z \end{vmatrix} = \left(\Omega_y z - \Omega_z y\right) \vec{i} + \left(\Omega_z x - \Omega_x z\right) \vec{j} + \left(\Omega_x y - \Omega_y x\right) \vec{k} \tag{71}$$

where Ω_x, Ω_y, and Ω_z is defined by equation (62). Then expansion of the cross product $\vec{r} \times (\vec{\omega} \times \vec{r})$ is

$$\vec{r} \times (\vec{\omega} \times \vec{r}) = \begin{vmatrix} \vec{i} & \vec{j} & \vec{k} \\ x & y & z \\ \left(\Omega_y z - \Omega_z y\right) & \left(\Omega_z x - \Omega_x z\right) & \left(\Omega_x y - \Omega_y x\right) \end{vmatrix}$$

$$\begin{aligned} &= \vec{i} \left[\Omega_x (y^2 + z^2) - \Omega_y (xy) - \Omega_z (xz)\right] dm \\ &+ \vec{j} \left[-\Omega_x (xy) + \Omega_y (x^2 + z^2) - \Omega_z (yz)\right] dm \\ &+ \vec{k} \left[-\Omega_x (xz) + \Omega_y (yz) + \Omega_z (x^2 + y^2)\right] dm \end{aligned} \tag{72}$$

By definition, the moments of inertia of a body about the x, y, z axes are

$$I_x = \int (y^2 + z^2)\, dm$$

$$I_y = \int (x^2 + z^2)\, dm$$

$$I_z = \int (x^2 + y^2)\, dm$$

and the products of inertia are

$$I_{xy} = \int xy \, dm$$

$$I_{xz} = \int xz \, dm$$

$$I_{yz} = \int yz \, dm$$

If the x, y, z axes are considered the principal axes, the products of inertia and the time derivatives of the moments of inertia are zero.

Therefore, by integrating equation (72) over the entire body and applying the above definition, the following is obtained:

$$h_o = I_x \Omega_x \vec{i} + I_y \Omega_y \vec{j} + I_z \Omega_z \vec{k} \tag{73}$$

in which case the moment of momentum components along the x, y, z axes are

$$h_x = I_x \Omega_x$$

$$h_y = I_y \Omega_y$$

$$h_z = I_z \Omega_z \tag{74}$$

It was shown previously that the moment about a body's center of gravity was equal to the time derivative of the moment of momentum.

$$\vec{M}_o = \frac{d\, h_o}{dt}$$

which in general form can be expressed as

$$\left(\frac{d\vec{h}o}{dt}\right) = \left[\frac{d\vec{h}o}{dt}\right] + \vec{\omega} \times \vec{h}_o$$

Substitute this into equation (70), Euler's moment equation is obtained,

$$\vec{M}_o = \frac{d\vec{h}o}{dt} + \vec{\Omega}_2 \times \vec{h}_o \tag{75}$$

where $\vec{\Omega}_2$ is the angular velocity of the second rotated axes system.

Taking the cross product $\vec{\Omega}_2 \times \vec{h}_o$ in a manner similar to equation (71), equation (75) becomes

$$\vec{M}_o = \left[\frac{dhx}{dt}\ \vec{i} + \frac{dhy}{dt}\ \vec{j} + \frac{dhz}{dt}\ \vec{k}\right] + \left(\Omega_{y2}h_z - \Omega_{z2}h_y\right)\vec{i}$$

$$+ \left(\Omega_{z2}h_x - \Omega_{x2}h_z\right)\vec{j} + \left(\Omega_{x2}h_y - \Omega_{y2}h_x\right)\vec{k} \tag{76}$$

and collecting terms yields

$$\vec{M}_o = \left(\frac{dhx}{dt} + \Omega_{y2}h_z - \Omega_{y2}h_y\right)\vec{i} + \left(\frac{dhy}{dt} + \Omega_{z2}h_x - \Omega_{x2}h_z\right)\vec{j}$$

$$+ \left(\frac{dhz}{dt} + \Omega_{x2}h_y - \Omega_{y2}h_x\right)\vec{k} \tag{77}$$

Now, taking the derivatives of equation (74) and remembering d(I)/dt = 0 for principal axes,

$$\frac{dhx}{dt} = I_x\dot{\Omega}_x$$

$$\frac{dhy}{dt} = I_y\dot{\Omega}_y$$

$$\frac{dhz}{dt} = I_y\dot{\Omega}_y \tag{78}$$

where $\dot{\Omega}_x$, $\dot{\Omega}_y$, $\dot{\Omega}_z$ are the derivatives of equation (62)

$$\dot{\Omega}_x = -\ddot{\phi}\cos\theta + \dot{\phi}\,\dot{\theta}\sin\theta + \dot{\omega}_{Ex_2}$$

$$\dot{\Omega}_y = \ddot{\phi} + \dot{\omega}_{Ey_2}$$

$$\dot{\Omega}_z = -\ddot{\phi}\sin\theta - \dot{\phi}\,\dot{\theta}\cos\theta + \ddot{\psi} + \dot{\omega}_{Ex_2} \tag{79}$$

and $\dot{\omega}_{Ex_2}$, $\dot{\omega}_{Ey_2}$, $\dot{\omega}_{Ez_2}$ are the derivatives of equation (61). Before taking the derivatives of equation (61), let the following be elements of equation (55) where subscripts indicate row and columns:

$$B_{11} = \cos\theta$$
$$B_{12} = -\sin\theta\sin\phi$$
$$B_{13} = -\sin\theta\cos\phi$$
$$B_{21} = 0$$
$$B_{22} = \cos\phi$$
$$B_{23} = -\sin\phi$$
$$B_{31} = \sin\theta$$
$$B_{32} = \cos\theta\sin\phi$$
$$B_{33} = \cos\theta\cos\phi \tag{80}$$

The derivatives of equation (80) are defined here

$$DB_{11} = -\dot{\theta}\sin\theta$$
$$DB_{12} = -\dot{\theta}\cos\theta\sin\phi - \dot{\phi}\sin\theta\cos\phi$$
$$DB_{13} = -\dot{\theta}\cos\theta\cos\phi + \dot{\phi}\sin\theta\sin\phi$$
$$DB_{21} = 0$$
$$DB_{22} = -\dot{\phi}\sin\phi$$
$$DB_{23} = -\dot{\phi}\cos\phi$$
$$DB_{31} = \dot{\theta}\cos\theta$$
$$DB_{32} = -\dot{\theta}\sin\theta\sin\phi + \dot{\phi}\cos\theta\cos\phi$$
$$DB_{33} = -\dot{\theta}\sin\theta\cos\phi - \dot{\phi}\cos\theta\sin\phi \tag{81}$$

Therefore,

$$\dot{\omega}_{Ex_2} = DB_{11}\omega_{Ex} + DB_{12}\omega_{Ey} + DB_{13}\omega_{Ez}$$

$$\dot{\omega}_{Ey_2} = DB_{21}\omega_{Ex} + DB_{22}\omega_{Ey} + DB_{23}\omega_{Ez}$$

$$\dot{\omega}_{Ez_2} = DB_{31}\omega_{Ex} + DB_{32}\omega_{Ey} + DB_{33}\omega_{Ez} \tag{82}$$

Substituting equations (74) (76), and (79) into equation (77) and writing $\vec{M}_o$ in component form with $I_x = I_y$,

$$M_x = I_x \left(-\ddot{\phi} \cos \theta + \dot{\phi}\,\dot{\theta} \sin \theta + \dot{\omega}_{Ex_2}\right) + \Omega_{y2} \left(I_z \Omega_z\right) - \Omega_{z2} \left(I_x \Omega_y\right)$$

$$M_y = I_x \left(\ddot{\theta} + \dot{\omega}_{Ey_2}\right) + \Omega_{z2} \left(I_x \Omega_x\right) - \Omega_{x2} \left(I_z \Omega_z\right)$$

$$M_z = I_z \left(-\ddot{\phi} \sin \theta - \dot{\phi}\,\dot{\theta} \cos \theta + \ddot{\psi} + \dot{\omega}_{Ez_2}\right) + \Omega_{x2} \left(I_x \Omega_y\right)$$

$$- \Omega_{y2} \left(I_x \Omega_x\right) \tag{83}$$

h. Summary of Equations of Motion

For convenience, the equations of motion are restated here with all terms added and in a form similar to that used in the program.

$$\frac{d^2x}{dt^2} = \frac{Fx}{m} - 2\dot{A} - \omega_{E_{yH}} C + \omega_{E_{zH}} B - Gx$$

$$\frac{d^2y}{dt^2} = \frac{Fy}{m} - 2\dot{B} - \omega_{E_{zH}} A + \omega_{E_{xH}} C - Gy$$

$$\frac{d^2z}{dt^2} = \frac{Fz}{m} - 2\dot{C} - \omega_{E_{xH}} B + \omega_{E_{yH}} A - Gz$$

$$\frac{d^2\theta}{dt^2} = \frac{My}{I_x} - \Omega_{z2}\Omega_x + \frac{\Omega_{x2} I_z \Omega_z}{I_x} - \dot{\omega}_{Ey_2}$$

$$\frac{d^2\phi}{dt^2} = \left(\frac{Mx}{I_x} + \frac{\Omega_{y2} I_z \Omega_z}{I_x} - \Omega_{z2}\Omega_y + \frac{d\phi}{dt}\frac{d\theta}{dt} \sin \theta + \dot{\omega}_{E_{x2}}\right) \Big/ \cos \theta$$

$$\frac{d^2\psi}{dt^2} = \frac{Mz}{I_z} - \frac{\Omega_{x2} I_x \Omega_y}{I_z} + \frac{\Omega_{y2} I_x \Omega_x}{I_z} + \frac{d^2\phi}{dt^2} \sin \theta$$

$$+ \frac{d\phi}{dt}\frac{d\theta}{dt} \cos \theta - \dot{\omega}_{E_{z2}}$$

where all term are known from the initialization or from the previous time step.

Although these equations have been written for a conical shaped body with weight change due only to ablation, it only a matter of modifying the equations to include thrust and additional forces and moments associated with a finned missile.

3. INTEGRATION TECHNIQUE

To integrate a set of η simultaneous second order differential equations of the form

$$\frac{d^2xi}{dt^2} = f_i \left(t, x_1, x_2, \ldots x_\eta\right), \; i = \left(1, 2, \ldots \eta\right)$$

The Runge-Kutta method of numerical integration is recommended for this type of application and especially where a high degree of accuracy is desired. Thus, the equations of motion in the preceding subsection are shown as six second-order differential equations, which are to be solved simultaneously. This method consists of four sets of equations which involve different substitutions into the differential equations. The equations are solved, and the increments of the functions are calculated as weighted averages of the solutions to the four equations. Therefore, the integration procedure for the expression of the form

$$\frac{d^2x}{dt^2} = f\ (t, x, x')$$

is described by the following generalized equations

$$x_{n+1} = x_n + x'_\eta$$

$$x'_{n+1} = x'_n + \frac{\Delta t}{6}\left(k_0 + 2k_1 + 2k_3 + k_3\right)$$

where

$$k_0 = \Delta t\ f\left(t_n, x_n, x'_n\right)$$

$$k_1 = \Delta t\ f\left(t_n + \frac{\Delta t}{2}, x_n + \frac{\Delta t}{2}\ x'_n, x'_n + \frac{k_0}{2}\right)$$

$$k_2 = \Delta t \; f\left(t_n + \frac{\Delta t}{2},\; x_n + \left(x_n' + \frac{\Delta t}{2} k\right) \frac{\Delta t}{2},\; x_n' + \frac{k_1}{2}\right)$$

$$k_3 = \Delta t \; f\left(t_n + \Delta t,\; x_n + x_n'\Delta t + \frac{\Delta t}{2} k_1,\; x_n' + k_2\right)$$

In integrating a differential equation numerically, the equation is replaced by a difference equation and solved accordingly. The Runge-Kutta method has excellent properties for stability in the integration and if the integration step is taken small enough, the difference equation is usually close to the differential equation solution. However, some variables in the equations of motion may have peculiar oscillations or increase very rapidly which could cause an unstable condition or an error in the solution. An unstable condition or solution can often be made stable by using a smaller integration step. The reason for this is that different step sizes change the parameters relating to the stability of the difference solution.

The integration step size, Δt, for this program is fixed, although the user could modify the integration method to use a variable step size under error control (Ref. 14). The user has the option to break into the program at exact specified values of the independent variable, t, for the printout step.

4. AERODYNAMIC HEATING AND ABLATION

The equations of heat transfer are general in that they apply to most axially symmetric vehicles of any composite skin structure. The vehicle skin is assumed to be made of discrete layers of material whose properties may vary from layer to layer and there is no limit on the number of layers. This program is specific in that the equations have been applied to a blunt-nosed, conical vehicle.

Hypersonic vehicles may be categorized into two general types. The first consists of those vehicles which must be propelled through the atmosphere to sustain flight. The second type comprises those that have a vast store of kinetic and potential energy which will be dissipated to the surrounding air during reentry. The latter type is of primary interest and for which this program was written, although it will handle either type.

In either case, some of this energy is expended against drag forces which assume the form of skin friction and pressure drag which produce heat. The heat equivalent of the kinetic energy contained within a body is approximately

$$V_{en}^2 \quad 50{,}000 \text{ (Btu/lb)}$$

where V_{en} is the reentry velocity in ft/sec. While only a fraction of this energy is actually transferred to the body as heat, this fraction is still a significant quantity and accurately illustrates the magnitude of the problem.

a. Heat Flux Equation

Experiments in high speed flow have verified that the magnitude and direction of heat flow at the surface does not depend on the difference between the wall temperature and the free-stream temperature as in low-speed flow, but rather on the difference between the wall temperature, TW, and the adiabatic wall temperature, TAW. It is apparent that the determination of the adiabatic wall temperature will be of prime importance in the calculation of heat transfer, since the transference of heat to or from the wall will depend upon whether the skin temperature is above or below TAW. The adiabatic wall temperature can conveniently be expressed in terms of a dynamic-temperature rise

$$\text{TAW} = \text{TEMPE} + \text{RF}\left(\frac{V_E^2}{2g_c C_{pa} J}\right) \tag{84}$$

where

TEMPE = boundary layer (B/L) edge temperature, °R

V_E = B/L edge velocity, ft/sec

g_c = gravitational constant, ft/sec^2

J = Joule's constant = 778

C_{pa} = specific heat of air, Btu/lb-°R

RF = recovery factor which is a measure of the fraction of the free-stream dynamic temperature rise recovered at the wall

Reference 15 shows that for practical purposes

$$\text{RF} \simeq \sqrt{\text{PR}} \tag{85a}$$

for laminar flow and

$$\text{RF} \simeq \sqrt[3]{\text{PR}} \tag{85b}$$

for turbulent flow where

PR* = Prandtl number

$PR = C_{pa}\ \mu^*/K^*$

μ^* = viscosity of air in lb/ft-sec evaluated at reference temperature $\left(T_{REF}\right)$

K^* = thermal conductivity of air in Btu/ft-sec-°R evaluated at T_{REF}

Therefore, the unit surface convective heat rate for high-speed flow (Ref. 16) is

$$\dot{q}_c/A = \overline{h}_e \left(T_{AW} - T_W\right) \tag{86}$$

where

$\dot{q}_c/A$ = heating rate in Btu/sec-ft^2

h_e = convective heat transfer coefficient in Btu/ft^2-sec-°R

A = local wetted area in ft^2

(i) Heat Transfer Coefficient

For determining the heat transfer coefficient in laminar flow over a flat plate, an empirical method using Blasius theory was developed by Rubesin and Johnson (Ref. 17) to account for the combined effects of the local Mach number and the temperature ratio of the wall, T_W, to the boundary layer edge, TEMPE. In this method, the conventional analysis of heat transfer by convection can be used, but the reference temperature, T_{REF}, for evaluating the fluid properties is expressed as a function of the local Mach number and of the ratio T_W/TEMPE. The method has been extended to cover turbulent flow, and has proved to be both convenient and useful.

Therefore, for laminar flow the reference temperature is

$$T_{REF} = TEMPE \left[1 + 0.58 \left(\frac{T_W}{TEMPE} - 1\right) + 0.032\ MACHE^2\right] \tag{87}$$

and for turbulent flow

$$T_{REF} = TEMPE \left[1 + 0.45 \left(\frac{T_W}{TEMPE} - 1\right) + 0.035\ MACHE\right] \tag{88}$$

Equations (87) and (88) can be expressed in the form for laminar flow as

$$T_{REF} = TEMPE + 0.58 \left(T_W - TEMPE\right) + 0.19 \ (TAW - TEMPE) \qquad (89)$$

and for turbulent flow as

$$T_{REF} = TEMPE + 0.45 \left(T_W - TEMPE\right) + 0.21 \left(T_{AW} - TEMPE\right) \qquad (90)$$

The heat transfer coefficient (Refs. 16, 18) is related to the flow properties through the expression

$$Nu^*(PR^*)^{1/3} = C\left(R_e\right)^a \qquad (91)$$

where

N_u^* = Nusselt number = $h_e x/K^*$

h_e = effective heat transfer coefficient

X = distance from nose, ft

K* = thermal conductivity of air, Btu/ft-sec-°R, evaluated at T_{REF}

R_e = B/L edge Reynolds number = $\rho_e V_e X/\mu_e$

ρ_e = boundary layer edge density, lb-sec^2/ft^4

V_e = boundary layer edge velocity, ft/sec

C = 0.575 for laminar flow on cone

C = 0.0296 for turbulent flow on cone

C = 0.778 for laminar flow on blunt body

C = 0.0348 for turbulent flow on blunt body

a = 0.8 for turbulent flow

a = 0.5 for laminar flow

μ_e = B/L edge viscosity, lb-sec/ft^2

The solutions to these equations for the heat transfer coefficient is obtained by the use of the Blasius incompressible flat plate skin friction coefficients modified for compressible flow by use of Eckert's reference enthalpy. For

laminar flow

$$\frac{C_{fc}}{C_f} = \sqrt{\frac{\rho^* \mu^*}{\rho_e \mu_e}} \tag{92a}$$

and for turbulent flow

$$\frac{C_{fc}}{C_f} = \left(\frac{\mu^*}{\mu_e}\right)^{0.2} \left(\frac{\rho^*}{\rho_e}\right)^{0.8} \tag{92b}$$

Good correlation with experimental data is obtained if the gas properties are evaluated at the reference temperature and the velocity is taken as the boundary layer edge velocity. For the case of mass addition, the properties of the injected gas are used to compute the Prandtl number and Nusselt number.

It is important in the selection of a suitable material for thermal protection by the ablative process that the products of decomposition have a high specific heat. This in turn produces a high effective mean specific heat of the gas-air mixture in the boundary layer and a high Prandtl number. It is also desirable that the ablator have a low thermal conductivity. This will decrease heat conducted to the interior of the vehicle. The surface of the vehicle also receives heat by radiation from the hot gas in the shock layer in addition to that by convection. As the air density is low, its emissivity is much less than 1 percent. Therefore, the rate of radiation heat transfer is negligible compared with that of aerodynamic convection and can be ignored.

b. Unsteady Heat Conduction

A means of applying the Schmidt graphical method for solving an unsteady heat conduction problem is presented here. A thorough discussion of this method can be found in any general text (Refs. 16, 19) and will not be attempted here. This method is quite flexible in that difficult boundary conditions can be handled easily.

This method is widely used for solving unsteady heat conduction problems because it gives an iterative profile of the temperature change. Because of its simplicity, mistakes, if they occur, are easily found, and relatively untrained personnel can accomplish the work. Numerical methods are especially convenient when a high-speed digital computer is available since the steps in a numerical solution can be programmed relatively easily.

The numerical method for solving unsteady-state heat conduction differs from that used to solve steady state. In the latter case, the temperature distribution in a body can be obtained for a network of points in a solid by solving a system of residual equations. In unsteady-state systems, the initial temperature profile is known, but its variation with time must be determined. Therefore, it is necessary to resolve the temperature profile at some future time from a given distribution at an earlier time.

To illustrate the numerical method, it is necessary to transform the Fourier conduction equation (a partial differential equation that is second order in space and first order in time) for the unsteady temeprature distribution in a heat-conducting solid into a finite difference form.

$$\frac{\Delta_\tau T}{\Delta\tau} = \frac{\alpha \Delta_x^2 T}{(\Delta x)^2} \tag{93}$$

The subscripts denote the differentiation variable. Letting n denote position and t time, $\Delta_\tau T$ can be written as

$$\Delta_\tau T = T_{n,t+1} - T_{n,t}$$

and in a similar manner

$$\Delta_x T = T_{n,t+1} - T_{n,t}$$

The expression $\Delta_x^2 T$ thus becomes

$$\Delta_x^2 T = T_{n+1,t} - 2T_{n,t} + T_{n-1,t}$$

Substituting these expressions into the Fourier equation (93), gives

$$T_{n,t+1} - T_{n,t} = \frac{\alpha \Delta\tau}{(\Delta x)^2}\left(T_{n+1,t} - 2T_{n,t} + T_{n-1,t}\right) \tag{94}$$

The temperature throughout a wall or slab can now be computed for any later time if the initial distribution is known. A Schmidt plot demonstrates the temperature profile versus time in a semi-infinite slab (figure 13).

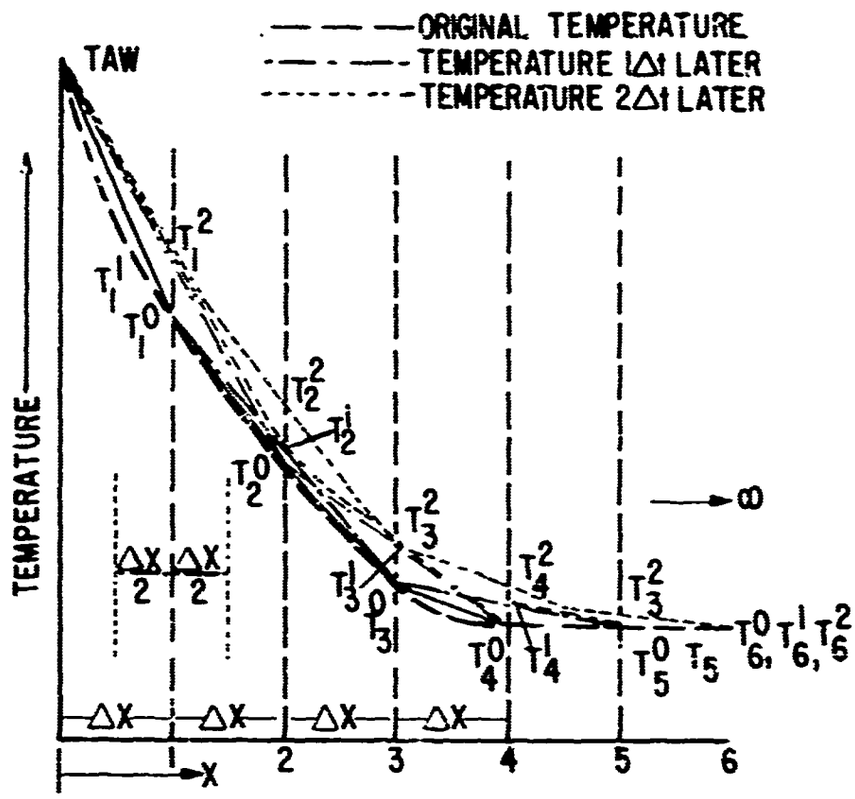

Figure 13. Schmidt Plot in an Infinitely Thick Wall

A constant wall temperature is assumed in the graphical example, but a varying wall temperature can be handled with equal ease. By letting the wall temperature vary with time, the distribution at each point within the body can be computed for each time increment.

c. Vehicle Thermal Model

To determine the time-temperature profile in the vehicle skin, the Fourier conduction equation was written as a finite difference equation and solved numerically. This method is a further adaptation of the Schmidt graphical method (Ref. 19). The wall is divided into a number of lamina with known thickness, specific heat, and thermal conductivity and with a known initial temperature distribution. Figure 14 illustrates the model with its associated nomenclature.

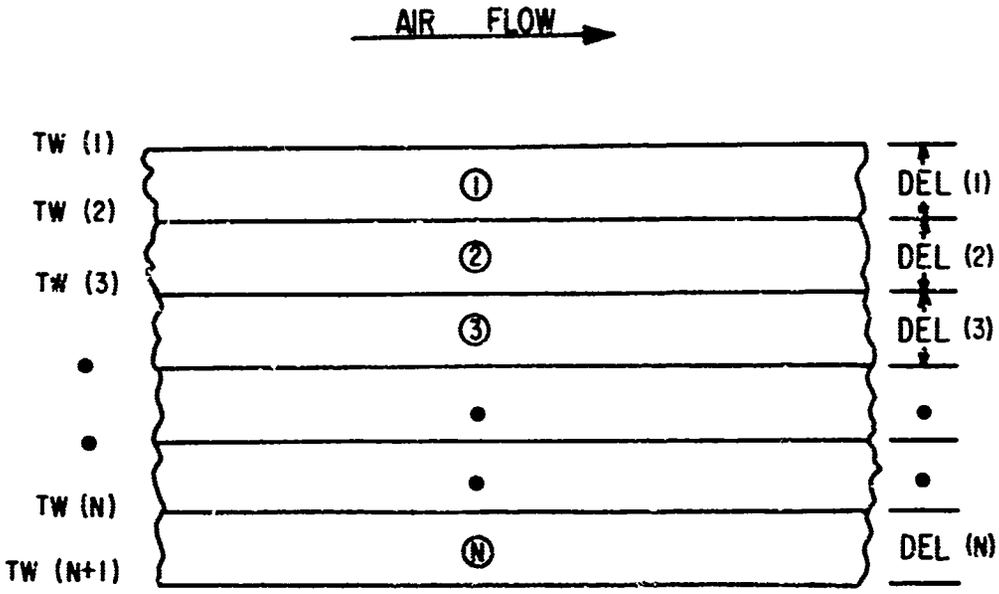

Figure 14. Model for Wall Temperature Profile and Ablation Recession Calculations

The difference equation for computing the temperature at position n at time t + 1 is

$$T_{n,t+1} = T_{n,t} + \frac{\alpha \Delta t}{(\Delta x)^2}\left(T_{n+1,t} - 2T_{n,t} + T_{n-1,t}\right) \tag{95}$$

In this form, the material properties cannot vary from layer to layer. If the properties vary from lamina to lamina, the above equation must be written in the form

$$T_{n,t+1} = T_{n,t} + \Delta t \left[\frac{\alpha_{n-1}}{\left(\Delta X_{n-1}\right)^2}\left(T_{n-1,t} - T_{n,t}\right) - \frac{\alpha_n}{\left(\Delta X_n\right)^2}\left(T_{n,t} - T_{n+1,t}\right)\right] \tag{96}$$

Where α is the thermal diffusivity and may be replaced by its defined equivalent,

$$\alpha = \frac{K}{\rho cp} \tag{97}$$

where

K = thermal conductivity of material in Btu/ft-sec-°R

ρ = density of material in lbs/ft^3

cp = specific heat of material in Btu/lb-°R

This step allows one to easily recognize certain groups of terms as the heat conducted through each lamina and permits the convective heat flux to be used in solving for the wall temperature. The equation for the wall temperature is

$$T_{n-1,t+1} = T_{n-1,t} + \frac{2\Delta t}{\left(\rho cp \Delta X\right)_{n-1}} \left[h_e\left(TAW - T_{n-1,t}\right)\right]$$

$$- \frac{2\Delta t\ K_{n-1}}{\left(\rho cp \Delta X^2\right)_{n-1}} \left(T_{n-1,t} - T_{n,t}\right) \tag{98}$$

The backface boundary condition can be specified in several ways. If internal heating (or cooling) is present, the backface may be held constant or allowed to vary in a specified manner. A conservative assumption is that no heat flows through the last lamina. This assumption will cause somewhat more ablation and higher temperatures than would be encountered with a cooled backface or other heat sink material.

d. Ablation

Advances in hypersonic atmospheric flight have resulted in environments of extremely high temperatures. Boundary layer temperatures in excess of 10,000°F are characteristic of vehicles entering the atmosphere at hypersonic speeds.

In hypersonic flight, it becomes obvious that capacitance or mass heat-sink protection, though simple, is an inefficient means of contending with the extremely high heat fluxes associated with certain reentries or with sustained

periods of thermal flight. Consequently, other means of cooling or protecting for operating beyond heat-sink limitations must be used. One convenient means of environmental protection and for which this program was primarily written is the ablation cooling method.

The ablative process is illustrated in figure 15. The ablation process works in the following manner: (1) the material or ablator acts as a heat sink; (2) when the critical or melting temperature of the ablator is reached, a thin layer of the material at the surface will begin successively to melt, vaporize, depolymerize, or decompose chemically; and (3) as the material vaporizes, the gaseous products of decomposition enter into the boundary layer. Being relatively cool, as compared to the boundary layer air, the injected gas forms a thin, but effective film that reduces the heat transfer to the vehicle skin. It is important in the selection of a suitable material for thermal protection by the ablative process that the thermal conductivity of the material should be as low as possible so as to confine the high-temperature zone at the surface to the thinnest layer possible. Likewise, to reduce the rate of mass loss, and hence, the required weight of protective ablator, the surface temperature at which decomposition and melting begins should be as high as practicable. The products of decomposition should preferably have a high Prandtl number, since it is defined as ratio of heat storage to heat conduction of a gas. This means it is desirable to have the mean effective specific heat of the gas-air mixture in the boundary layer as large as possible.

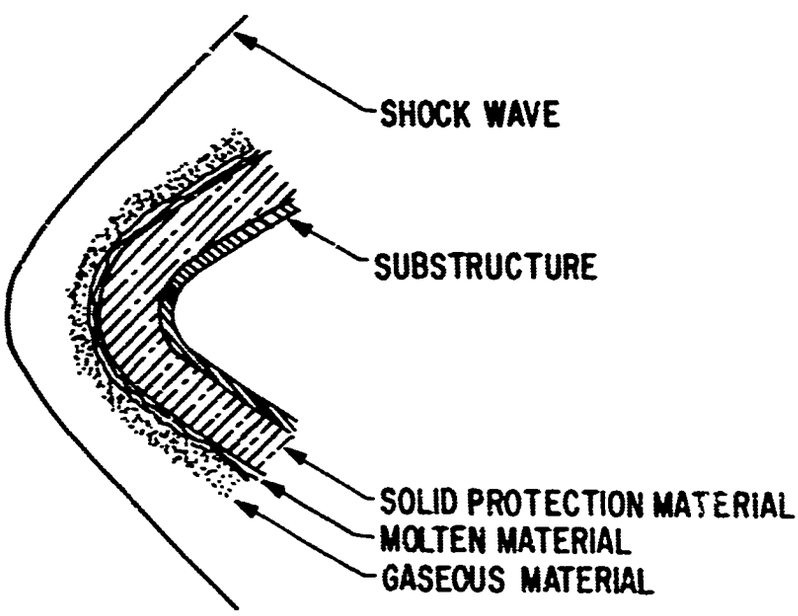

Figure 15. Ablative Process

Since the ablation process can be characterized by an exchange of material for thermal energy, the energy balance at the ablating surface, in its simplest form, is

$$\dot{q}_{net} = \dot{q}_c - \dot{q}_{cond} - \dot{q}_{rad} - \dot{q}_{block} \tag{99}$$

where $\dot{q}_c$ is heat transferred to the surface by convection, $\dot{q}_{cond}$ is the heat conducted from the surface to the substrate material, $\dot{q}_{block}$ is the heat blockage by transpiration in the boundary layer, and $\dot{q}_{rad}$ is negligible and has been ignored.

Ablation is assumed to occur when the temperature of the outermost lamina has reached the melting temperature of the material. The outer surface will recede and is assumed to take place normal to the local surface.

(1) Mass Loss and Surface Recession

Two mechanisms are involved in the loss of ablation material: (1) mass loss due to oxidation, and (2) mass loss due to sublimation. Oxidation is controlled by the diffusion of oxygen to the reacting carbon, and sublimation is controlled by local pressure and temperature. A detailed discussion on the theory of ablation and material decomposition and reaction is not the intent of this report, so only the results will be presented.

The efficiency of an ablation material is frequently defined for engineering use in terms of a quantity known as the effective heat of ablation, Q*, in Btu/lb,

$$Q^* = \frac{\dot{q}_o}{\dot{m}} \tag{100}$$

where $\dot{q}_o$ is the surface heating rate of a nonablating calorimeter at the ablative temperature, and $\dot{m}$ is the mass ablation rate. The term "effective heat of ablation" collectively expresses the ability of a material to absorb, block, and dissipate incident heat per unit mass expended. The effective heat of ablation value may also be expressed by using equations (99) and (100) as

$$Q^* = \frac{\dot{q}_{cond} + \dot{q}_{block}}{\left(1 - \dot{q}_{rad}/\dot{q}_o\right)} \tag{101}$$

or by substituting approximate equations for each gives

$$Q^* = \frac{Cp\left(T_w - T_b\right) + 0.7\left(\frac{M_{air}}{M_v}\right)^{1/4} \dot{m}_v \, (\Delta h)_o}{\left(1 - \dot{q}_{rad}/\dot{q}_o\right)} \tag{102}$$

where

Cp = heat capacity of material

T_w = ablative surface temperature

T_b = temperature of unheated material

M_{air} = molecular weight of air

M_v = molecular weight of injected gas

m_v = rate of mass injection

$(\Delta h)_o$ = enthalpy difference across boundary layer without transpiration

If the radiation, q_{rad}, is insignificant, equation (102) can be reduced to the form

$$Q^* = A + B \, (\Delta h)_o \tag{103}$$

where A is an empirical value obtained from experimental investigations of different ablators and B is dependent on whether flow is laminar or turbulent.

The surface recession rate is obtained by

$$\dot{S} = \frac{\dot{q}_c}{Q^* \rho} \tag{104}$$

where

$\dot{s}$ = recession rate, ft/sec

ρ = ablation material density, lb/ft^3

The enthalpy difference across the boundary can be calculated from the following equations:

$$(\Delta h)_o = h_r - Cp_a \, T_w \tag{105}$$

where

$$h_r = Cp_a \cdot TEMPE + RF \cdot V_E^2/\left(2g_c J\right)$$

The following are analytical expressions used in this program for determining mass loss and recession rates of three common ablators.

(a) Phenolic Refrasil (Silica)

The expression for obtaining the effective heat of ablation for Phenolic Refrasil is

$$Q^* = 4710 + B\ (\Delta h)_o \tag{106}$$

where

B = 0.58 for laminar flow

B = 0.32 for turbulent flow

(b) ATJ Graphite

The effective heat of ablation for ATJ graphite is

$$Q^* = 2000 + B\ (\Delta h)_o \tag{107}$$

where

B = 2 for either turbulent or laminar flow

(c) Carbon Phenolic

The expressions for carbon phenolic are more complicated than those used for the other materials due to reaction of carbon with atmospheric oxygen. This material has a very high melting temperature and a low thermal conductivity which gives it excellent insulation properties. Also, its products of decomposition have a high specific heat compared to that of air.

For laminar flow, the diffusion mass loss rate is given by (Refs. 20, 21)

$$\dot{M}_d = \frac{\dot{q}_c}{K1_L + K2_L\left(h_r - Cp_{BL}TW\right)} \tag{108}$$

and for turbulent flow, the expression is

$$\dot{M}_d = \frac{\dot{q}_c}{K1_T + K2_T \left(h_r - Cp_{BL} TW\right)} \tag{109}$$

where the constants K1 and K2 can be interpreted as the intercept and slope, respectively, on an effective heat of ablation versus enthalpy difference (between recovery and wall conditions) plot.

$\dot{q}_c$ = convective heat flux, Btu/ft^2-sec

h_r = recovered enthalpy, Btu/lb

Cp_{BL} = specific heat in boundary layer, Btu/lb-°R

T_W = wall temperature, -°R

$K1_L$ = 5370

$K2_L$ = 5.37

$K1_T$ = 4240

$K2_T$ = 5.77

The total mass loss rate is given by

$$\dot{M}_T = \dot{M}_d \left[1 + 2.64 \times 10^4 \ (PBL)^{-0.67} \ EXP \left(\frac{-11.05 \times 10^4}{TW}\right)\right] \tag{110}$$

where

$\dot{M}_T$ = total mass loss rate, lb/ft^2-sec

PBL = boundary layer edge pressure, lb/ft^2 (Ref. 20)

The surface recession rate is calculated by

$$\dot{S} = \dot{M}_T/\rho \tag{111}$$

where

$\dot{S}$ = recession rate, ft/sec

ρ = ablation material density, lb/ft^3

(2) Total Weight Loss Rate and Total Weight Loss

After the local instantaneous and total local recession rates have been computed, the local weight loss rate can be calculated, if needed, by determining the volume reduction of the local segment and multiplying by the material density. But the primary weight loss of interest is the total for the vehicle. To compute the total vehicle mass loss and mass loss rate, the following procedure is used. Using the local weight loss rate, the instantaneous and total recessions, and the initial radii and slant length of the particular segment of interest (see figure 16), the mass loss rate per unit area is multiplied by the appropriate surface area to give a local integrated mass loss rate. This is accomplished by the following equations:

$$\dot{WT}_{(LEN)} = PI \left(RL_{(LEN)} + RS_{(LEN)} - 2\dot{C}_{(LEN)}\right) \dot{S}\rho_c \, SOL_{(LEN)} \tag{112}$$

where

$\dot{WT}_{(LEN)}$ = instantaneous mass loss rate of segment (LEN), lb/sec

(LEN) = number of particular segment of cone

RL = larger segment radius, ft

RS = smaller segment radius, ft

$\dot{C}_{(LEN)}$ = total recession of segment, ft

$\dot{S}$ = instantaneous recession of segment, ft/sec

ρ_c = surface material density, lb/ft^3

$SOL_{(LEN)}$ = slant height of conical segment, ft

$$\dot{W} = \dot{W} + \dot{WT}_{(LEN)} \tag{113}$$

will give total vehicle mass loss rate when the operations in equation (113) are accomplished in a program "Do Loop." Summing these local rates will result in the total vehicle weight loss.

e. Stagnation Heating

To evaluate stagnation point convective heat transfer rates, this program employs Lee's theory (Ref. 22), modified by use of Eckert's reference enthalpy techniques (Ref. 19), in Lee's equation

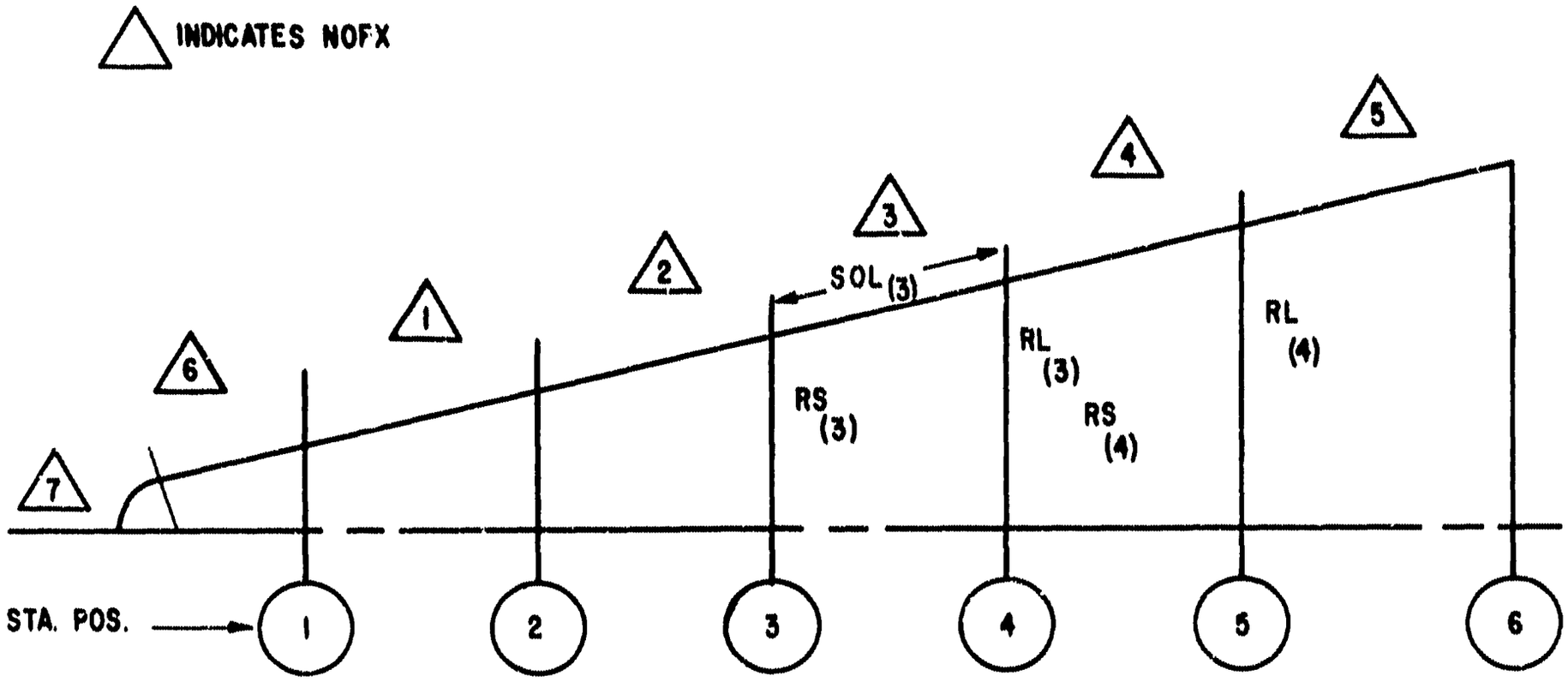

Figure 16. Vehicle Nomenclature

$$q_{c_{STAG}} = \frac{0.778}{(PR)^{2/3}} \sqrt{\rho_{WS}\mu_{WS}} \sqrt{dV/dx}\, h_{se} \cdot G\left(M_\infty, \bar{\gamma}, \gamma_\infty\right) \tag{114}$$

where

$$G\left(M_\infty, \bar{\gamma}, \gamma_\infty\right) = \left(\frac{\bar{\gamma}-1}{\bar{\gamma}}\right)^{1/4} \left(1 + \frac{2}{\gamma_\infty - 1}\frac{1}{M_\infty^2}\right)^{1/4} \left(1 - \frac{1}{\gamma_\infty M_\infty^2}\right)^{1/4}$$

$\bar{\gamma} \simeq 1.10 - 1.20$ at high temperatures

$h_{se} = V_\infty^2/2GJ$

$\gamma_\infty = 1.4$ ratio of specific heats for air

ρ_{WS} = density evaluated at stagnation reference conditions

μ_{WS} = viscosity evaluated at stagnation reference conditions

dV/dx = velocity component gradient at the stagnation point (from Fay and Riddell)

$$\frac{dV}{dx} = \frac{1}{SNR}\left[2\left(P_S - P_\infty\right)/\rho_{WS}\right]^{0.5}$$

P_S = stagnation pressure (oblique shock)

(1) Nose Blunting

In the determination of nose blunting, it is assumed that the initial nose shape of particular interest was a sphere-cone, and after ablation the final shape was a sphere-cone. Experimental evidence has shown that the final eroded shape could be approximated by a sphere-cone having a small deviation from a sphere. The reference sphere-cone configuration after erosion is obtained by placing a spherical surface tangent to a cone parallel to the original surface but displaced by the erosion on the cone and is located axially at a position on the vehicle center line in accordance with the erosion at the stagnation point (figure 17).

The experimental evidence of nose-shape change of reentry vehicles, as previously noted, can be represented by a sphere-cone which deviates from a spherical shape by an amount less than 10 percent of the final nose radius. The final eroded nose radius can be obtained in terms of the stagnation point erosion and cone erosion as shown in the following equation:

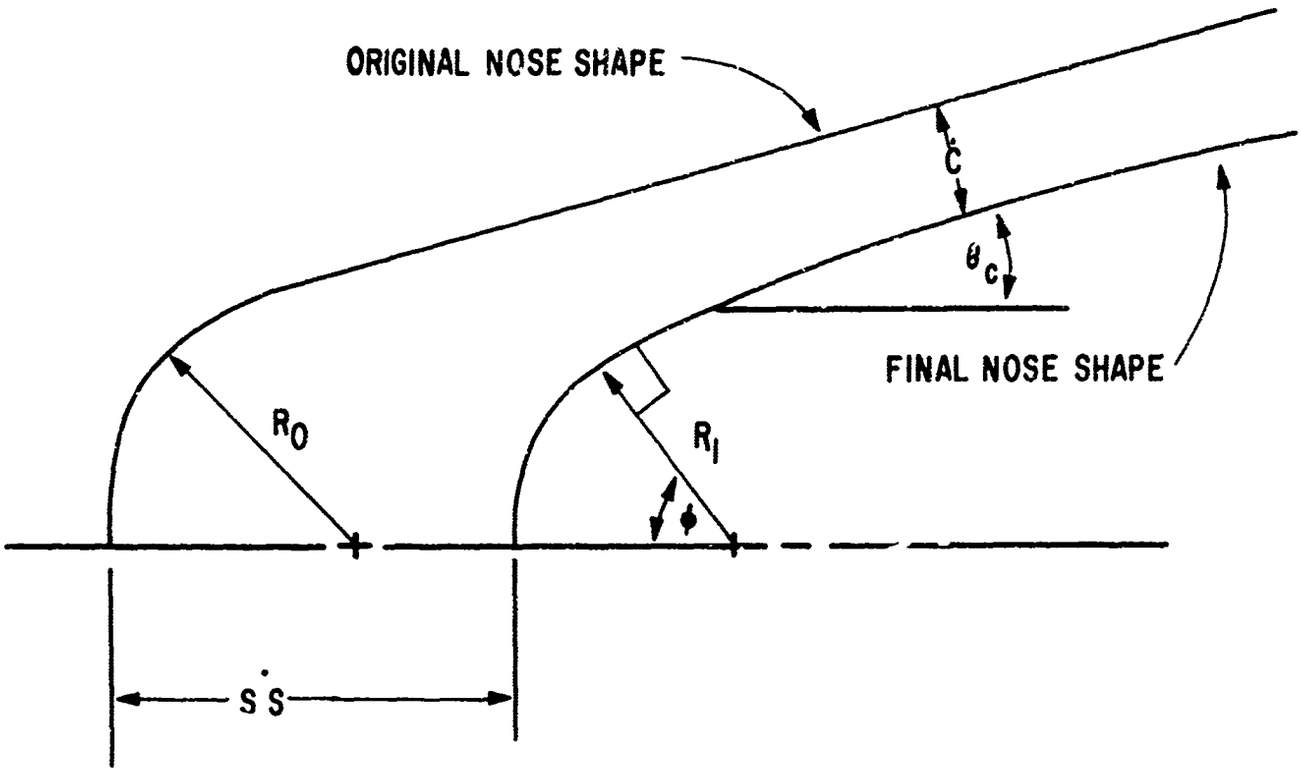

Figure 17. Vehicle Nose-Shape Change

$$R = R_0 + \frac{1}{\left(1 - \sin\theta_c\right)}\left[\sin\theta_c \int_0^t \left(\frac{\dot{q}_c}{\rho Q^*}\right)_S dt - \int_0^t \left(\frac{\dot{q}_c}{\rho Q^*}\right)_C dt\right]$$

The integral represents the erosion at a given time during the flight for the locations at the stagnation point S and a point on the cone C at a location of wetted length of about five times the nose radius.

It is now possible to evaluate the final nose radius for a given application. Let

$$\dot{S}_S = \int_0^t \left(\frac{\dot{q}_c}{\rho Q^*}\right)_S dt \tag{115}$$

and

$$\dot{C} = \int_0^t \left(\frac{\dot{q}_c}{\rho Q^*}\right)_C dt \tag{116}$$

therefore

$$R = R_o + \frac{1}{\left(1 - \sin\theta_c\right)} \left[\sin\theta_c \, \dot{S}_S - \dot{C}\right] \tag{117}$$

where

R_o = original nose radius, ft

R = instantaneous nose radius, ft

θ_c = cone half-angle

$\dot{S}_S$ = stagnation point recession rate, ft/sec

$\dot{C}$ = recession rate at location, C, ft/sec (see figure 17)

f. Boundary Layer Transition

The problem of transition from laminar to turbulent boundary layer flow has always been a troublesome one for the aeronautical engineer. The standard approach usually has been to design conservatively, that is, for turbulent flow. In general, the transition Reynolds number has been found to primarily depend upon the local Mach number, which has been observed in the analysis of boundary layer transition on a series of flight vehicles. Transition on blunt spherical nose vehicles with low boundary layer edge Mach numbers appears to occur at Reynolds number of 1.5×10^6, while on sharp bodies where the edge of the boundary layer edge Mach numbers approach 10 Reynolds numbers as high as 2.0×10^7 have been observed prior to transition. Thus, for untested vehicle configurations, it is necessary to investigate the relationship of the Mach number and the Reynolds number in both the high and low Mach number regions. This relationship between Mach number and Reynolds number stands to reason if their definitions are understood. The parameter Mach number describes the influence of compressibility on heat transfer and flow phenomena and is defined

as the ratio of the gas or flight velocity to the local or ambient speed of sound. The Reynolds number, which describes the nature of flow, is a dimensionless measure of the ratio of inertial to viscous forces.

It should be noted that flight data on sharp bodies indicate that, generally, transition does not occur instantaneously over the entire vehicle so that it may travel several thousand feet between the onset of transition and the establishment of a fully turbulent boundary layer. See references 23 and 24.

The approach used in this program is to apply the sharp and blunt body transition Reynolds numbers simultaneously. Therefore, the sharp body criterion is described by the expression

$$Re_{TRAN} = 6.6 \times 10^7$$

and the blunt body criterion is applied when either of the following two Reynolds numbers are reached with conditions stated

$Re_{TRAN} = 1.5 \times 10^6$ on the spherical nose

$Re_{TRAN} = 5.0 \times 10^6$ on the conical portion aft of the spherical nose for a wetted length of five times the nose radius.

The above criteria has been found to correlate with experimental data.

5. AERODYNAMICS

The one item that plays the most significant role in determining the performance of a high velocity or hypersonic reentry vehicle is aerodynamic drag. Experimental results have been correlated with theoretical studies of the nonsteady effects on a reentry vehicle or missile during its trajectory. These results indicate that the aerodynamic forces can be determined accurately by assuming quasi-steady flow conditions; that is, the flow field at any instant of time is the same as that associated with steady motion at the same velocity. Furthermore, it has been demonstrated that the boundary layer behaves in a quasi-steady manner. Therefore, assuming that the validity of these results carry over for an ablating blunt cone, the instantaneous drag coefficients can be obtained from equivalent steady-state conditions.

This program asumes that the drag consists of three components: cone pressure or forebody drag, base pressure drag, and skin friction or viscous drag. It is convenient to consider these quantities as distinct quantities which can be added together to obtain the total vehicle drag. Though all these quantities are distinct, some are dependent upon the boundary layer condition. For example, the condition of the boundary layer, laminar or turbulent, which influences the viscous drag can also influence the base drag.

a. Cone Pressure Drag

The forebody pressure drag for a slender body at zero angle-of-attack or at incidence can be calculated on the basis of the modified slender-body theory.

The forebody pressure drag is defined by the relation

$$D_p = - \iint_{S_m} P \cos\left(\eta, V_\infty\right) d S_m$$

where $\cos\left(\eta, V_\infty\right)$ is the cosine of the angle between V_∞ and the outward normal to the vehicle surface. The area S_m comprises the total area of the vehicle except base area.

For a sharp cone at $\alpha = 0$, the pressure P_c is constant over the entire body, and the forebody drag is then only a function of the pressure ratio P_c/P_∞ across the conical shock. Solutions for this pressure ratio as a function of Mach number and cone angle, θ_c, have been tabulated by Kopal (Ref. 25) for the ratio of specific heats of $\gamma = 1.405$. These r sults have been employed directly in the drag equation in order to obtain the forebody drag on a sharp cone. The analysis produced the equation

$$C_{Dp} = 4 \sin^2 \theta_c \left[\frac{2.5 + 8 M_\infty \sin \theta_c}{1 + 16 M_\infty \sin \theta_c}\right] \tag{118}$$

which is similar to the form of the Newtonian drag equation for a sharp cone. The last term represents the variation from the Newtonian theory due to Mach number effects.

Nose blunting of a cone will increase the pressure drag. Local overpressures are induced near a blunt nose by the strong nose-shock curvature. The results of sharp and blunt body solutions have been correlated as a function of M_∞, θ_c, and R_N/R_B. However, for bluntness ratios, R_N/R_B less than 0.05, the values for the drag due to the overpressures are low compared to C_{Dp}.

This program does account for the drag due to the nose being blunt within the limits expressed above. The sharp cone drag is modified by assuming the nose drag to be that of a sphere minus that of the cone replaced by the sphere. Because both of these terms are referenced to the projected area of the sphere, the area or bluntness ratio, R_N/R_B, term is needed as a correctness factor. Therfore, the pressure coefficient for a blunt cone is (Ref. 26)

$$C_{Dp_{cone}} = C_{Dp} + \left[0.58 - C_{Dp}\right]\left(\frac{R_N}{R_B}\right)^2 \tag{119}$$

where 0.58 is drag coefficient for a sphere obtained from reference 27

C_{Dp} is from equation (118)

R_N/R_B is the bluntness ratio of nose radius to cone base radius

b. Skin-Friction Drag

The skin-friction or viscous drag is defined as

$$D_V = \iint_{S_m} \tau \cos\left(t, V_\infty\right) d\, S_m$$

where τ is the local skin friction per unit area due to viscosity, and $\cos\left(t, V_\infty\right)$ is the cosine of the angle between V_∞ and the tangent to the vehicle surface in the τ direction as shown in figure 18.

The skin-friction drag coefficient can be defined as

$$C_{Df} = \frac{2\pi}{A_B} \int_0^L C_{f_\infty} \cos \alpha\, r\, dx \tag{120}$$

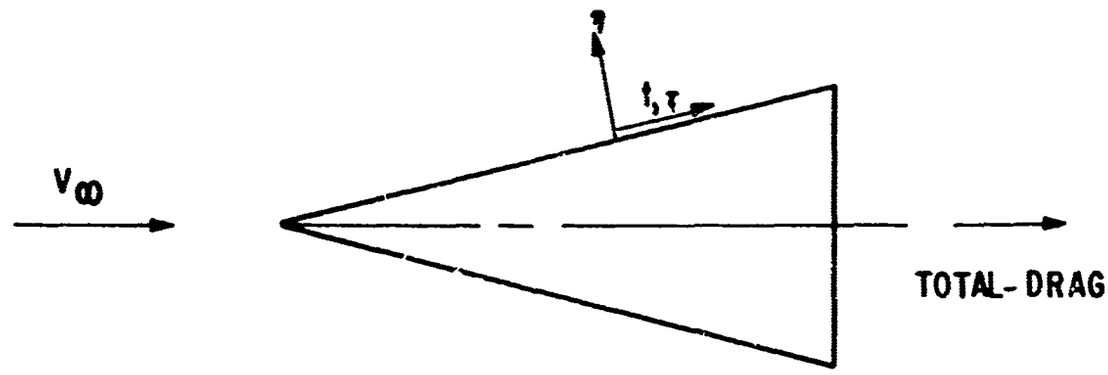

Figure 18. Aerodynamic Body Subject to Normal and Tangential Forces

where C_{f_∞} is the local skin-friction coefficient defined as

$$C_{f_\infty} = \frac{\tau}{1/2\ \rho\ V_o^2} \tag{121}$$

(1) Local Skin-Friction Coefficient

(a) Laminar Flow, $\alpha = 0$

The local skin-friction coefficient is calculated using the Blasius flat plate in compressible solution. The flat plate solution was modified for conical flow by the Mangler transformation (Ref. 28) and for compressibility by Eckert's reference enthalpy method (Ref. 29).

The modified Blasius equation is

$$C_f = \frac{0.664}{\sqrt{Re_x}} \quad \sqrt{3} \quad \sqrt{\frac{\rho^* \mu^*}{\rho_e \mu_e}} \left(\frac{\rho_e V_e^2}{\rho_\infty V_\infty^2} \right) \tag{122}$$

where

$Re_x = \frac{\rho_e V_e\ x}{\mu_e}$ boundary layer edge Reynolds number

x = distance along sharp cone surface

ρ_e = density of air

μ_e = viscosity of air

V_e = velocity

The superscript * and subscripts e and ∞ signify the property is evaluated at the reference enthalpy or conditions at the edge of boundary layer or free stream, respectively.

Equation (121) can be simplified to

$$C_{f_\infty} = \frac{1.15}{\sqrt{x}} \frac{V_e^{1.5} \left(\rho^* \mu^*\right)^{0.5}}{\rho_\infty V_\infty^2} \tag{123}$$

Letting

$$R_{\infty_x} = \frac{\rho_\infty V_\infty x}{\mu_\infty}$$

and rearranging equation (123),

$$C_{f_\infty} = \frac{1.15}{\sqrt{R_{\infty_x}}} \left(\frac{V_e}{V}\right)^{1.5} \sqrt{\frac{\rho^* \mu^*}{\rho_\infty \mu_\infty}} \tag{124}$$

From references 30 and 31, the quantity

$$\sqrt{\frac{\rho^* \mu^*}{\rho_\infty \mu_\infty}}$$

can be replaced by

$$\sqrt{\frac{\rho^* \mu^*}{\rho_\infty \mu_\infty}} = \left(\frac{P_c}{P_\infty}\right)^{0.5} \left(\frac{h^*}{h_\infty}\right)^{-0.185}$$

where

$$\frac{h^*}{h_\infty} = \frac{h^*}{h_e} \frac{T_e}{T_\infty}$$

It is assumed that cone pressure p_c is equal to boundary layer edge pressure, p_e, the free-stream specific heat is equal to the boundary layer edge specific heat, the specific heat ratio is $\gamma = 1.405$, and the recovery factor, R_F, is equal to 0.8426. Therefore, equation (123) for the local skin-friction coefficient can be written as

$$C_{f_\infty} = \frac{1.15}{\sqrt{R_{\infty_x}}} \left(\frac{V_e}{V_\infty}\right)^{1.5} \left(\frac{p_e}{p_\infty}\right)^{0.5} \left(\frac{T_e}{T_\infty}\right)^{-0.185} \left(\frac{h^*}{h_e}\right)^{-0.185} \tag{125}$$

where

$$\frac{h^*}{h_e} = 0.5 + 0.5 \frac{T_W}{T_\infty}\left(\frac{T_e}{T_\infty}\right)^{-1} + 0.0374\, M_e^2 \tag{126}$$

The ratios,

$$\left(\frac{V_e}{V_\infty}\right)$$

$$\left(\frac{p_e}{p_\infty}\right)$$

$$\left(\frac{T_e}{T_\infty}\right)$$

are obtained from conical flow results given by Bertram (Refs. 31 and 32) which have been correlated as a function of the hypersonic similarity parameter, $M_\infty \sin \theta_c = K_c$. A curve-fit of these results produced the following relations:

$$\frac{V_e}{V_\infty} = \left[1 - \frac{1.4}{M_\infty^2}\left(K_c\right)^{1.9}\right]^{0.5} \tag{127}$$

$$\frac{P_e}{P_\infty} = 1 + 2.8\, K_c^2 \left[\frac{2.5 + 8\, K_c}{1 + 16\, K_c}\right] \tag{128}$$

$$\frac{T_e}{T_\infty} = 1 + 0.0966\ K_c + 0.2267\ \left(K_c\right)^2 \tag{129}$$

The local Mach number can be computed from

$$\frac{M_e}{M_\infty} = \frac{V_e}{\sqrt{\gamma_e R_e T_e}} \cdot \frac{\sqrt{\gamma_\infty R_\infty T_\infty}}{V_\infty}$$

From previous assumptions and reducing

$$\frac{M_e}{M_\infty} = \frac{V_e}{V_\infty}\left(\frac{T_e}{T_\infty}\right)^{-0.5} \tag{130}$$

The local laminar skin-friction is now defined in terms of free-stream conditions, wall temperature, and cone angle.

(b) Turbulent Flow, $\alpha = 0$

Using the Blasius flat plate incompressible solution modified in a similar manner for conical flow and compressibility, the Blasius equation for the local skin friction coefficient in turbulent flow is

$$C_{f_\infty} = \frac{0.0698}{R_{ex}^{0.2}}\left(\frac{\rho^*}{\rho_e}\right)^{0.8}\left(\frac{\mu^*}{\mu_e}\right)^{0.2}\frac{\rho_e V_e^2}{\rho_\infty V_\infty^2} \tag{131}$$

By substituting in a manner similar to laminar flow, and using the same ratios and rearranging, the following expression for the turbulent skin-friction coefficient in terms of free-stream conditions, wall temperature, and cone angle is given by

$$C_{f_\infty} = \frac{0.0698}{\left(R_{\infty x}\right)^{0.2}}\left(\frac{V_e}{V_\infty}\right)^{1.8}\left(\frac{P_e}{P_\infty}\right)^{0.8}\left(\frac{h^*}{h_e}\right)^{-0.58}\left(\frac{T_e}{T_\infty}\right)^{-0.58} \tag{132}$$

where

$$\left(\frac{h^*}{h_e}\right) = 0.5 + 0.5\left(\frac{T_w}{T_\infty}\right)\left(\frac{T_e}{T_\infty}\right)^{-1} + 0.0388\ M_e^2$$

for $R_F = 0.877$.

(2) Average Skin-Friction Coefficient

To obtain the average skin-friction coefficient for both laminar and turbulent flow, the local value must be integrated over the cone surface. Therefore, substituting πR_B^2 for A_B in equation (120) and rearranging

$$C_{Df} = \frac{2\pi}{\pi R_B^2} \int_0^L C_{f_\infty} \cos\theta\,(r)\,dx \tag{133}$$

but

$$C_{f_\infty} = \left(C_{f_\infty}\right)_{x=L} \left(\frac{L}{x}\right)^{0.5}$$

and

$$R_B^2 = L^2 \sin^2\theta_c$$

$$r = x \sin\theta_c$$

Substituting these relations into equation (133), then

$$C_{Df} = \frac{2}{L^2 \sin^2\theta_c} \left(C_{f_\infty}\right)_{x=L} (L)^{0.5} \cos\theta_c \sin\theta_c \int_0^L (x)^{0.5}\,dx \tag{134}$$

Now, combining equation (134) with equations (125) and (133), the average skin-friction coefficients for laminar and turbulent flow are, respectively,

$$C_{D_{F_L}} = \frac{1.533}{\sqrt{R_{\infty_L}}} \left(\frac{V_e}{V_\infty}\right)^{1.5} \left(\frac{P_e}{P_\infty}\right)^{0.5} \left(\frac{T_\infty}{T_e}\right)^{0.185} \left(\frac{h_e}{h^*}\right)^{0.18[illegible]} \left(\cot\theta_c\right)$$

and

$$C_{D_{F_T}} = \frac{0.0776}{\left(R_{\infty_L}\right)^{0.2}} \left(\frac{V_e}{V_\infty}\right)^{1.[illegible]} \left(\frac{P_e}{P_\infty}\right)^{0.[illegible]} \left(\frac{T_\infty}{T_e}\right)^{0.[illegible]} \left(\frac{h_e}{h^*}\right)^{0.[illegible]} \left(\cot\theta_c\right) \tag{135}$$

The wall temperature used in the enthalpy ratio equation is taken as an average temperature over the entire vehicle surface.

c. Base Drag

The base pressure drag is determined by the mechanics of the wake, for which there is as yet no complete theory. Values of the base pressure coefficient C_{PB} must be obtained experimentally. Because of this, analytical methods of treating base drag are usually replaced by a correlation of experimental results. As the vehicle velocity increases, the base pressure, and therefore, the base-drag coefficient are affected similarly to other pressures. Once the speed is well into the supersonic region, most base pressures for a cone approach about 70 percent of a vacuum. Hoerner (Ref. 33) has correlated a wide variety of data for conical flow with the following result:

$$C_{PB} = 1.43/M_\infty^2 \tag{136}$$

for a vacuum. Reducing this by 70 percent

$$C_{PB} = 1.001/M_\infty^2 \tag{137}$$

for $M \geq 2$.

d. Stability Derivatives

The stability derivatives used in this program are for a sharp cone and are easily derived from references 34 and 35. These derivatives consisted of the damping coefficient per radian of pitch angle of attack, CMQ, and the rate of change of the normal force coeficient per degree of pitch angle of attack, CN_α. These values are for the following cone conditions:

$$4.0° < \theta_c < 10°$$

and

$$0 < R_N/R_B < 0.3$$

The rate of change of pitching moment coefficient, CMA, can be computed as

$$CMA = -(SM)\ (CNA)/\ DIA \tag{138}$$

where

SM = static margin in feet

DIA = reference diameter in feet

Because of the symmetry of the conical vehicle used in this program, the values produced by yaw angle of attack and yaw angular velocities are equal in magnitude to pitch (data). Therefore,

$$CNR = CMQ \tag{139}$$

$$CNB = -CMA \tag{140}$$

$$CYB = -CNA \tag{141}$$

The derivatives are used to compute the aerodynamic forces and moments needed to restore the vehicle to zero angle of attack in pitch and yaw.

SECTION III

SUBROUTINES

1. ATMOSPHERIC PROPERTIES

The following list of subroutines are incorporated in STRAB-6 to compute the necessary atmospheric properties. This atmosphere uses the equations derived for the 1962 U.S. Standard atmosphere.

a. Subroutine RHOF

This subroutine computes the atmospheric density as a function of geometric altitude from the main program. The geometric altitude is converted to geopotential altitude in the subroutine and the density is computed accordingly. The units of density, Rho, are lbs-sec^2/ft^4.

b. Subroutine VSD

This subroutine calculates the velocity of sound, VS, in feet/sec as a function of geometric altitude.

c. Subroutine TEMPA

The ambient temperature, TEMP, is calculated in this subroutine as a function of geometric altitude. The units are degrees R.

d. Subroutine VISCO

This subroutine computes the viscosity of air as a function of geometric altitude. The units are lb-sec/ft^2.

e. Subroutine PRESS

The ambient pressure, PE, is calculated in this subroutine as a function of geometric altitude. The units are lb/ft^2.

2. HOT AIR PROPERTIES

a. Subroutine VISCOT

This subroutine calculates the viscosity of air as a function of temperature. It is used primarily for the hot air in the nonablating boundary layer. The units are lb/sec-ft.

b. Subroutine TCAT

The thermal conductivity, TCA, of hot air is calculated in this subroutine as a function of temperature. The units of TCA are Btu/ft-sec-°R.

3. ABLATOR THERMAL PROPERTIES

The following subroutines are used to compute the thermal properties of carbon phenolic, phenolic silica (Refrasil), and ATJ graphite. The properties computed are the thermal conductivity and the specific heat. The carbon phenolic and phenolic silica ablator have both virgin and char properties as well as densities. From all available data for ATJ graphite, it appears that no distinction is made between virgin or char conditions. The subroutines that compute the thermal properties for carbon phenolic and phenolic silica have the same names to minimize card changes in the main program.

a. Subroutine VTCPC

This subroutine computes the virgin thermal conductivity for carbon phenolic or for phenolic refrasil as a function of wall temperature. The units are Btu/ft-sec-°R.

b. Subroutine VCPPC

The virgin specific heat for carbon phenolic or phenolic silica is calculated by this subroutine as a function of wall temperature. The units are Btu/lb-°R.

c. Subroutine CTCPC

The char thermal conductivity for carbon phenolic or phenolic silica is computed by this subroutine as a function of wall temperature. The units are in Btu/ft-sec-°R.

d. Subroutine CCPP

This subroutine computes the char specific heat of carbon phenolic or phenolic silica as a function of wall temperature. The units are Btu/lb-°R.

4. ABLATION GAS PROPERTIES

Subroutines GCPB and GASTC compute the thermal properties of the ablative gas-air mixture in the boundary layer. These subroutines are used with the carbon phenolic ablator only. They compute the gas specific heat and gas thermal conductivity. The values associated with phenolic refrasil and ATJ graphite are inputted as single values.

5. STABILITY DERIVATIVES SUBROUTINES

These subroutines are incorporated into STRAB-6 for computation of the necessary aerodynamics discussed in section II-5. The equations are general for the following cone parameters:

$$4.0° < \theta_c < 10.0°$$

$$0 < R_N/R_B < 0.3$$

$$3.0 < M_\infty < 30$$

a. Subroutine CDSF

This subroutine calculates the aerodynamic drag coefficients CP, CAN, CPB, and CDF as a function of M_∞ or Reynolds number. CDSF is called for in the main program.

(1) Subroutine CDFM

This subroutine computes the skin-friction drag, CDF, and is called into the program through subroutine CDSF. The boundary layer edge properties are calculated in this subroutine.

b. Subroutine ACMQ

The damping coefficient, CMQ, is calculated in this subroutine as a function of free-stream Mach number. CMQ is per radian.

c. Subroutine ACNA

This subroutine computes the normal force coefficient, CNA, as a function of free-stream Mach number. CNA is per radian.

6. SUBROUTINE INITIAL (Ref. 36)

This subroutine is incorporated into STRAB-6 to provide the necessary vehicle geometry calculations and changes in units. By reading in vehicle axial stations of interest, the subroutine will compute the transition Reynolds number, slant height (SOL), smaller radius (RS), and larger radius (RL) for each conical segment. It will also compute the appropriate cone base radius and total slant height. See figure 16 for further clarification.

7. SUBROUTINE ATTK AND SSLP

These subroutines are used to compute the complete range of angles of attack, ALP, and sideslip, BFT. These angles are computed as a function of the components of the relative velocity.

8. SUBROUTINE DLON

This subroutine computes the longitude of the vehicle with respect to the earth reference system. See section II-2c for derivation.

SECTION IV

PROGRAM OPERATION

1. INPUT DATA REQUIREMENT

All input data that is subject to change either due to vehicle or trajectory requirements are read into STRAB-6 from the data statement. The word data is punched first, then the FORTRAN symbol, and then the numerical values. The symbols and numerical values are punched in Columns 7 through 72, inclusive, with up to nine continuation cards if needed. Columns 73 to 80, inclusive, can be used for comments or identification. The numerical values can be punched in any format except "I." Care should be taken to keep the symbol and its corresponding value in the same sequence. For example:

```
DATA V. AZN, NOFX, NAL, GAMMA/22414., 123.003, 8, 4, -39.92/
```

Also,

```
DATA WE, REQ, ET/0.729E-04, 20,927491E+06, 8.18133302E-02/
```

Another method of data card is

```
DATA (POS (I), I = 1, 6)/3.338, 15.189, 27.040, 38.851, 50.742, 65.556/
```

Another flexibility of the input routine, aside from the fact that the data can be introduced in any order of the symbols (with their associated values), is the feature that permits inputting the same symbol (and an associated value) again, thus superseding the previous value. This feature is convenient when basically constant vehicle configurations and initial conditions are maintained in many runs with only a few quantities changing. The "Standard" input data cards may be kept intact, and only the varying quantities may be punched on a card after the data cards which may be removed later.

For the heating portion of the program, there are several "Do Loops" that initialize temperatures, ablator lamina thickness, control indicators, and thermal properties of the adhesive bond and backface aluminum shell. Also, there are various equations to obtain initial trajectory conditions as well as initial dummy program starters.

a. Multi-Case Run

This program readily lends itself for a multi-case run with a minimal change. If the need arises for a parametric study of various vehicle geometry and trajectory missions, the following changes can be made to some of the data inputs and check for completion of the multi-case run.

```
Read 1500, NCASE, (POS(J), J=1, 8) 1500 FORMAT (I2, 7A10, A8)

Print 1501, NCASE, (POS(J), J-1, 8) 1501 FORMAT (1H1, 30X, 7A10, A8)
```

These read and print statements allow the identifier to be read into the program and case heading to be printed out before that particular case data output. The 1500 format allows the case number to be punched in the first two columns. When a zero is in these columns, the program will go to end with this check statement.

```
If (NCASE.NE.0) go to 1700
END
```

where statement 1700 would be the return at the beginning of the program to start another case.

To update the vehicle configuration and trajectory parameters, the following data input is used

```
Read 1300, (POS(I), I=1,NOFX)

Read 1300, THETC, GAMMA, BI

Read 1300, V, AXN, GLAT, DLON

Read 1300, ALGTH, SNR 1300 Format (8F10.2)
```

All other data input cards would remain the same. See appendix II for multi-case listing and setup.

2. OUTPUT DATA REQUIREMENTS

The output quantities of the program and sample case are shown in appendixes I and III.

Before the printout of any results, a listing of the program and input data cards are printed. This record of the actual program listing and data input will assist in the identification of a run as well as an aid in troubleshooting in the event of arithmetic errors.

The first block of data printout of the matrix of temperatures, lamina thickness, etc., are obtained from the initialization "Do Loops" for heating portion of the program. This printout is done only once.

The second block of data is the trajectory output, aerodynamic coefficients, and boundary layer edge values. The next block of output is the wall and skin-profile temperatures, total recession, integrated weight loss rate, and total weight loss.

Printout is regulated by a time indicator. Data can be printed out at any time step desired. If a printout of data is wanted every 0.1 second, set BT = .1. The following method will then allow printout at that time step.

```
        BTL = BT - H/6.

        BTH = BT + H/6.

If (T  .GT.BTL . AND. T. LT. BTH) go to (statement number)

         BT = BT + .1
```

where H is the Runge-Kutta integration time step. This method will allow data printout and also go into the heating portion of the program.

In addition to the printed output, selected quantities may also be obtained as punched output. The punched cards may be useful for machine plotting or as input to some other program.

3. FLOW DIAGRAMS

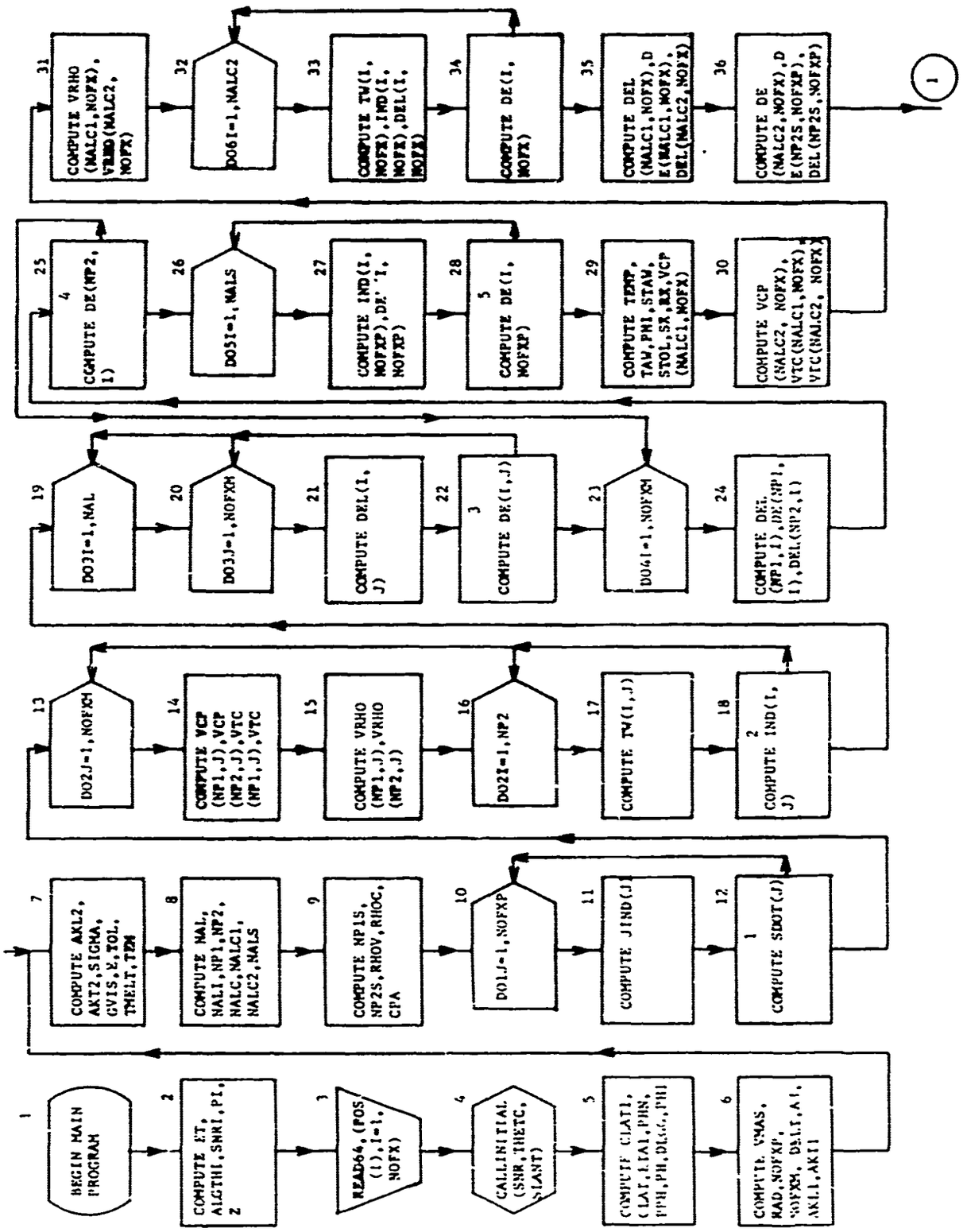

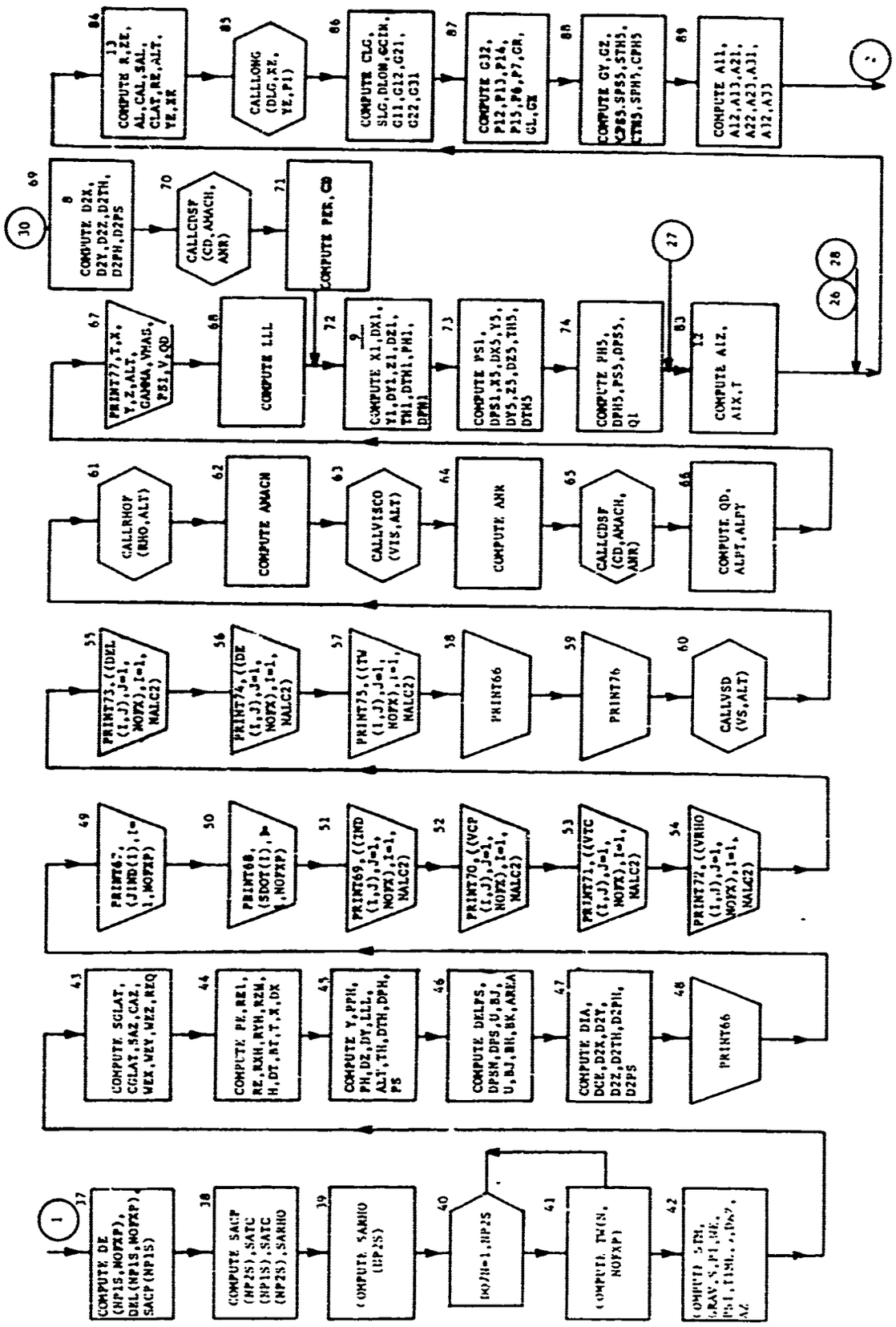
COMPUTE DE (NP15,NOFXP), DEL(NP15,NOFXP), SACP(NP15)
COMPUTE SACP (NP25),SATC (NP15),SATC (NP25),SARHO
COMPUTE SARHO (NP25)
DO/N=1,NP25
COMPUTE TWIN, NOFXP)
COMPUTE SGLAT, CGLAT,SAZ,CAZ, WEX,WEY,WEZ,REQ
COMPUTE PR,REI, RE,RXH,RYH,RZH, H,DT,RT,T,X,DX
COMPUTE Y,PPH, PH,DZ,DY,LLL, ALT,TH,DTH,DPH, PS
COMPUTE DELPS, DPSN,DPS,U,BJ, U,BJ,BH,BK,AREA
COMPUTE DIA, DCE,D2X,D2Y, D2Z,D2TH,D2PH, D2PS
PRINT66
PRINT67, (JIND(I),I=1,NOFXP)
PRINT68, (SDOT(I),I=1,NOFXP)
PRINT69,((IND (I,J),J=1, NOFX),I=1, NALC2)
PRINT70,((VCP (I,J),J=1, NOFX),I=1, NALC2)
PRINT71,((VTC (I,J),J=1, NOFX),I=1, NALC2)
PRINT72,((VRHO (I,J),J=1, NOFX),I=1, NALC2)
PRINT73,((DEL (I,J),J=1, NOFX),I=1, NALC2)
PRINT74,((DE (I,J),J=1, NOFX),I=1, NALC2)
PRINT75,((TV (I,J),J=1, NOFX),I=1, NALC2)
PRINT66
PRINT76
CALLVSD (VS,ALT)
CALLRHOF (RHO,ALT)
COMPUTE AMACH
CALLVISCO (VIS,ALT)
COMPUTE ANK
CALLCDSF (CD,AMACH, ANK)
COMPUTE QD, ALPT,ALPY
PRINT77,T,X, Y,Z,ALT, GAMMA,VMAG, PSI,V,QD
COMPUTE LLL
COMPUTE D2X, D2Y,D2Z,D2TH, D2PH,D2PS
CALLCDSF (CD,AMACH, ANK)
COMPUTE PER,CD
COMPUTE X1,DX1, Y1,DY1,Z1,DZ1, TH1,DTH1,PH1, DPH1
COMPUTE PS1, DPS1,X5,DX5,Y5, DY5,Z5,DZ5,TH5, DTH5
COMPUTE PH5, DPH5,PS5,DPS5, Q1
COMPUTE AIZ, AIX,T
COMPUTE R,ZE, AL,CAL,SAL, CLAT,RE,ALT, YE,XE
CALLLONG (DLG,XE, YE,P1)
COMPUTE CLG, SLG,DLON,GCIR, G11,G12,G21, G22,G31
COMPUTE G32, P12,P13,P14, P15,P6,P7,GR, GL,GX
COMPUTE GY,GZ, CPB5,SPB5,STH5, CTH5,SPH5,CPH5
COMPUTE A11, A12,A13,A21, A22,A23,A31, A32,A33

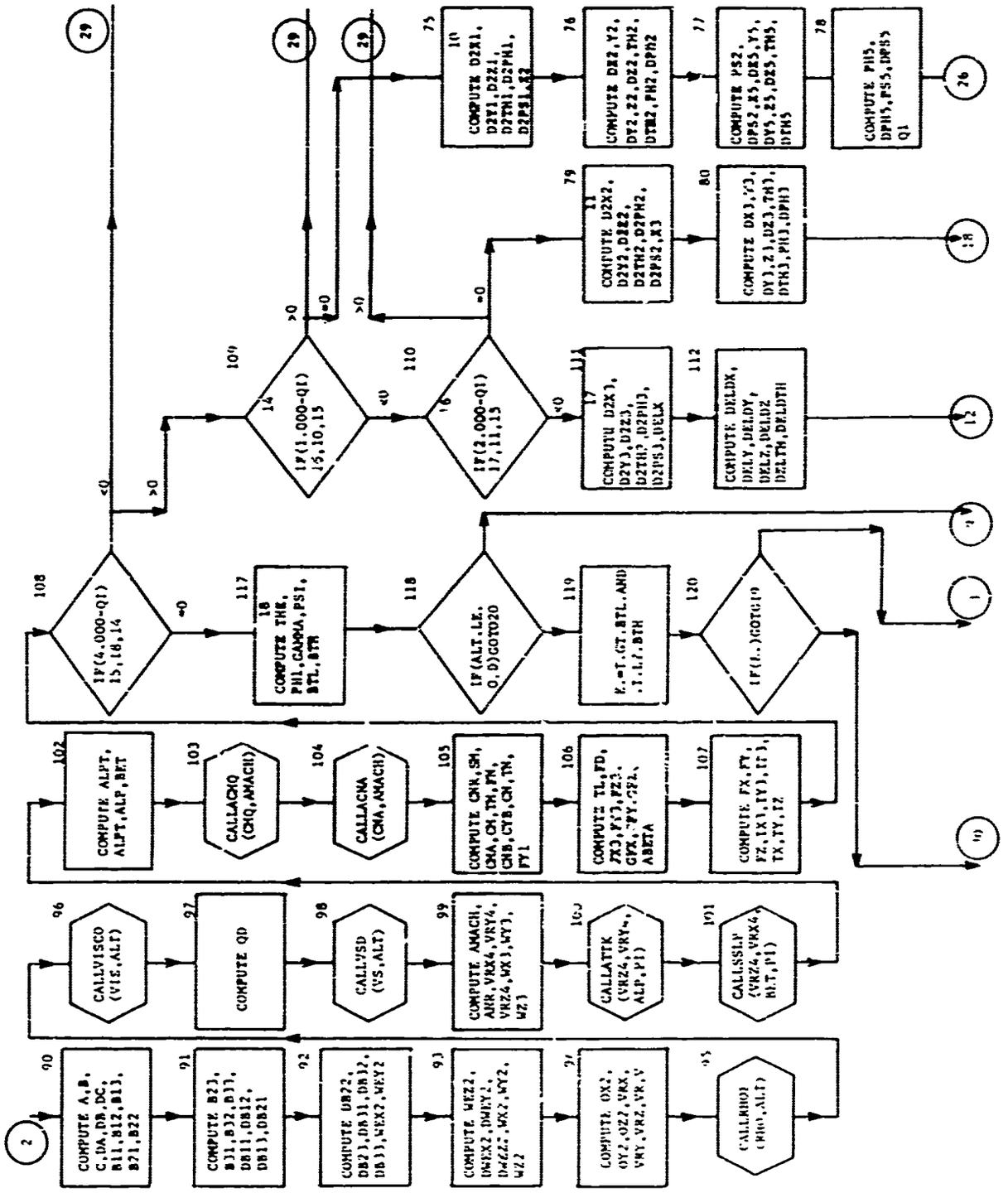
COMPUTE A,B, C,DA,DB,DC, B11,B12,B13, B21,B22
COMPUTE B22, B31,B32,B33, DB11,DB12, DB13,DB21
COMPUTE DB22, DB23,DB31,DB32, DB33,WEX2,WEY2
COMPUTE WEZ2, DWEX2,DWEY2, DWEZ2,WX2,WY2, WZ2
COMPUTE OX2, OY2,OZ2,VRX, VRY,VRZ,VR,V
CALLRHOD (RHO,ALT)
CALLVISCO (VIS,ALT)
COMPUTE QD
CALLVSD (VS,ALT)
COMPUTE AMACH, AMR,VRX4,VRY4, VRZ4,WX3,WY3, WZ3
CALLATK (VRZ4,VRY4, ALP,PI)
CALLSSLP (VRZ4,VRX4 ALT,PI)
COMPUTE ALPT, ALPT,ALP,BET
CALLACHQ (CHQ,AMACH)
CALLACNA (CMA,AMACH)
COMPUTE CNR,SM, CMA,CH,TM,FM, CNB,CYB,CN,TN, FY1
COMPUTE TL,FD, FX3,FY3,FZ3, GFX,FY,GFZ, ABETA
COMPUTE FX,FY, FZ,TX1,TY1,TZ1, TX,TY,TZ
IF(4.000-Q1) 15,18,14
COMPUTE THE, PHI,GAMMA,PSI, BTL,BTH
IF(ALT.LE. 0.0)GOTO20
X.=T.GT.BTL.AND .T.LT.BTH
IF(..)GOTO10
IF(1.000-Q1) 15,10,15
IF(2.000-Q1) 17,11,15
COMPUTE D2X1, D2Y1,D2Z1, D2TH1,D2PH1, D2PS1,X2
COMPUTE D2X2, D2Y2,D2Z2, D2TH2,D2PH2, D2PS2,X3
COMPUTE D2X3, D2Y3,D2Z3, D2TH3,D2PH3, D2PS3,DELX
COMPUTE DELDX, DELY,DELDY, DELZ,DELDZ DELTH,DELDTH
COMPUTE D2Z2,Y2, DZ2,Z2,DZ2,TH2, DTH2,PH2,DPH2
COMPUTE PS2, DPS2,X5,DX5,Y5, DY5,Z5,DZ5,TH5, DTH5
COMPUTE PH5, DPH5,PS5,DPS5 Q1
COMPUTE DX3,Y3, DY3,Z3,DZ3,TH3, DTH3,PH3,DPH3

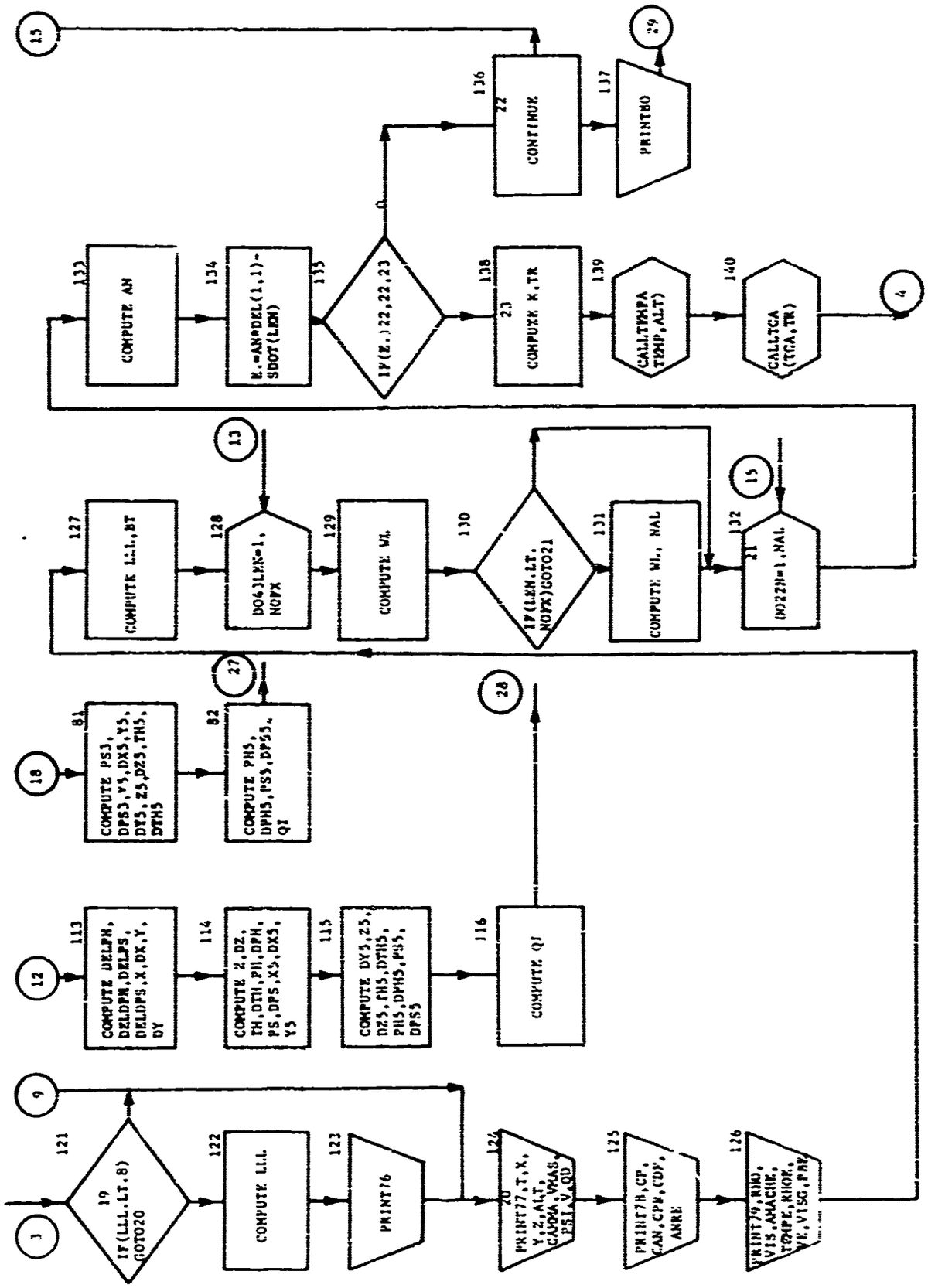
1
121
19
IF(LLL.LT.8)
GOTO20
9
122
COMPUTE LLL
123
PRINT76
124
20
PRINT77,T,X,
Y,Z,ALT,
GAMMA,VMAS,
PSI,V,QD
125
PRINT78,CP,
CAN,CPM,CDY,
ANRE
126
PRINT79,RNO,
VIS,ANACHE,
TEMPE,RNOK,
VE,VISC,PRE
12
113
COMPUTE DELPH,
DELDPH,DELPS,
DELDPS,X,DX,Y,
DY
114
COMPUTE Z,DZ,
TH,DTH,PH,DPH,
PS,DPS,X5,DX5,
Y5
115
COMPUTE DY5,Z5,
DZ5,TH5,DTH5,
PH5,DPH5,PS5,
DPS5
116
COMPUTE QI
28
18
81
COMPUTE PS3,
DPS3,Y5,DX5,Y5,
DY5,Z5,DZ5,TH5,
DTH5
82
COMPUTE PH5,
DPH5,PS5,DPS5,
QI
27
127
COMPUTE LLL,BT
128
DO63LEN=1,
NOPX
13
129
COMPUTE WL
130
IF(LEN.LT.
NOPX)GOTO21
131
COMPUTE WL, NAL
132
21
DO22N=1,NAL
15
133
E.=AN*DEL(1,1)-
SDOT(LEN)
134
135
IF(E.)22,22,23
0
136
22
CONTINUE
137
PRINT80
29
138
23
COMPUTE K,TR
139
CALLTEMPA
TEMP,ALT)
140
CALLTCA
(TCA,TR)
4

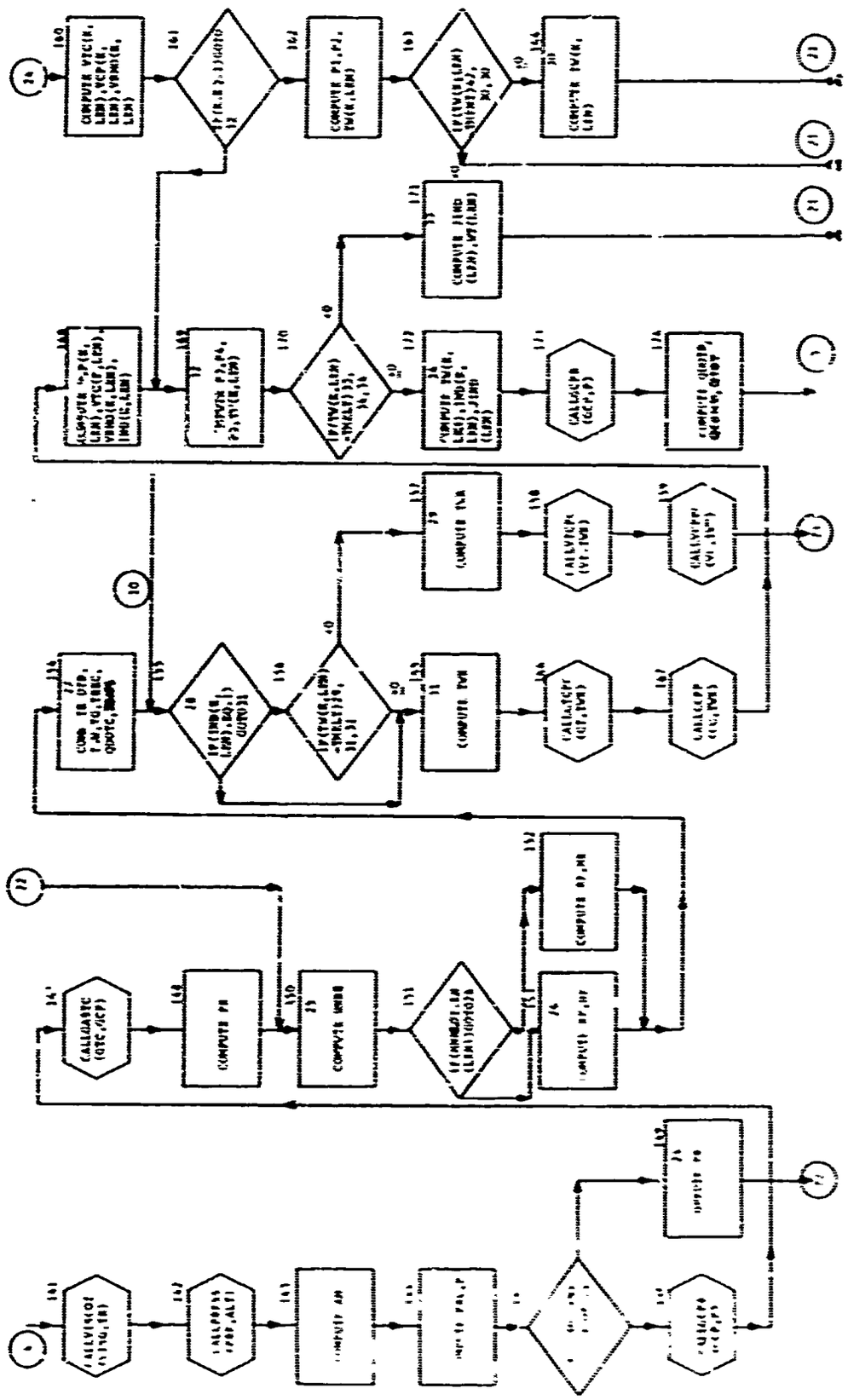

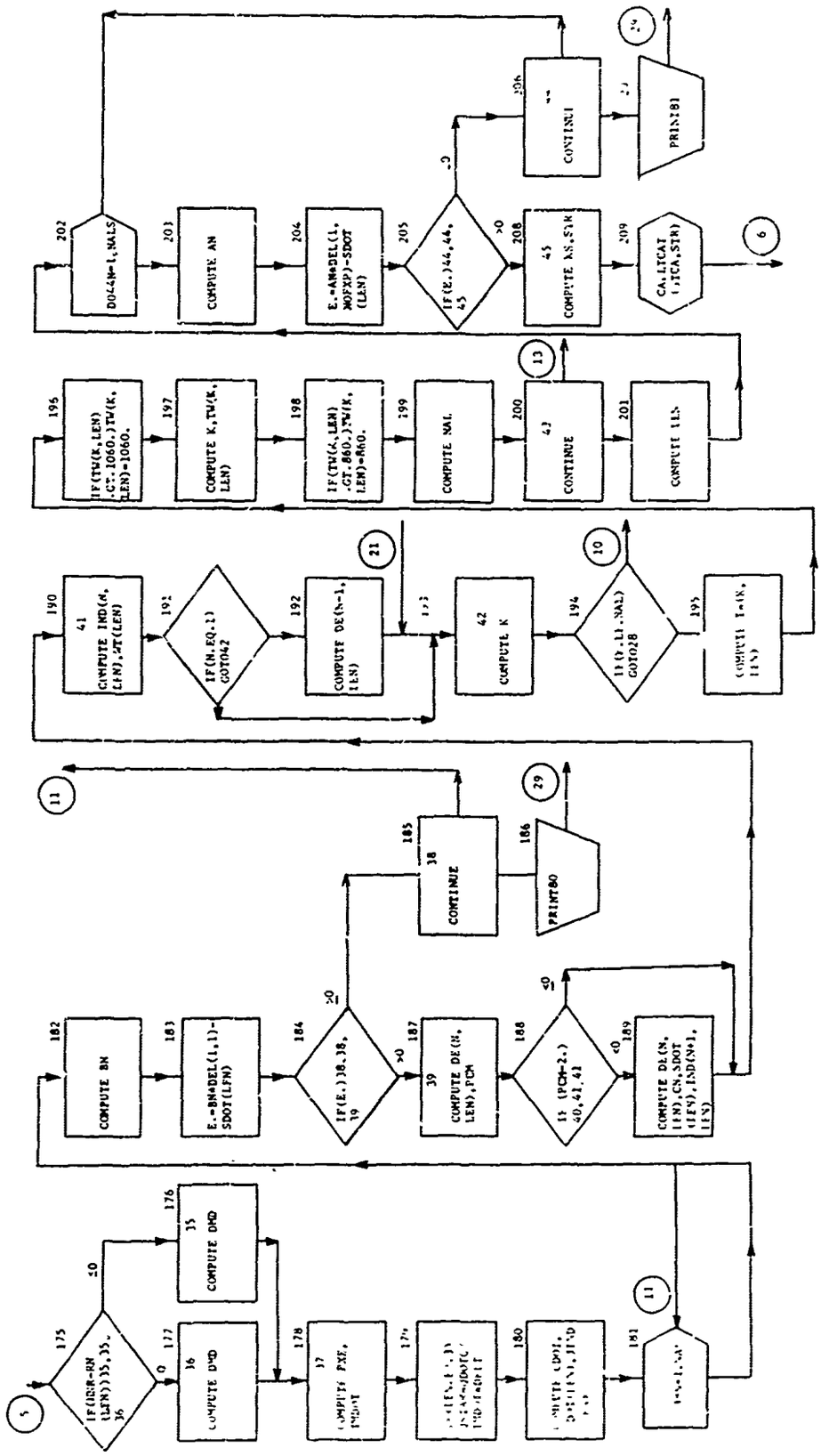
COMPUTE BN
E.=BN*DEL(1,1)-SDOT(LEN)
IF(E.)38,38,39
COMPUTE DE(N,LEN),PCM
IF (PCM-2.) 40,41,41
COMPUTE DL(N,LEN),CN,SDOT(LEN),IND(N+1,LEN)
38 CONTINUE
PRINT80
COMPUTE DWD
COMPUTE IND(N,LEN),ZT(LEN)
IF(N.EQ.1) GOTO42
COMPUTE DE(N-1,LEN)
42 COMPUTE K
IF(N.LT.NAL) GOTO28
COMPUTE K,TW(K,LEN)
COMPUTE NAL
42 CONTINUE
DO44N=1,NALS
COMPUTE AN
E.=AN*DEL(1,NOFXP)-SDOT(LEN)
IF(E.)44,44,45
45 COMPUTE AN,SIN
CONTINUE
PRINT81

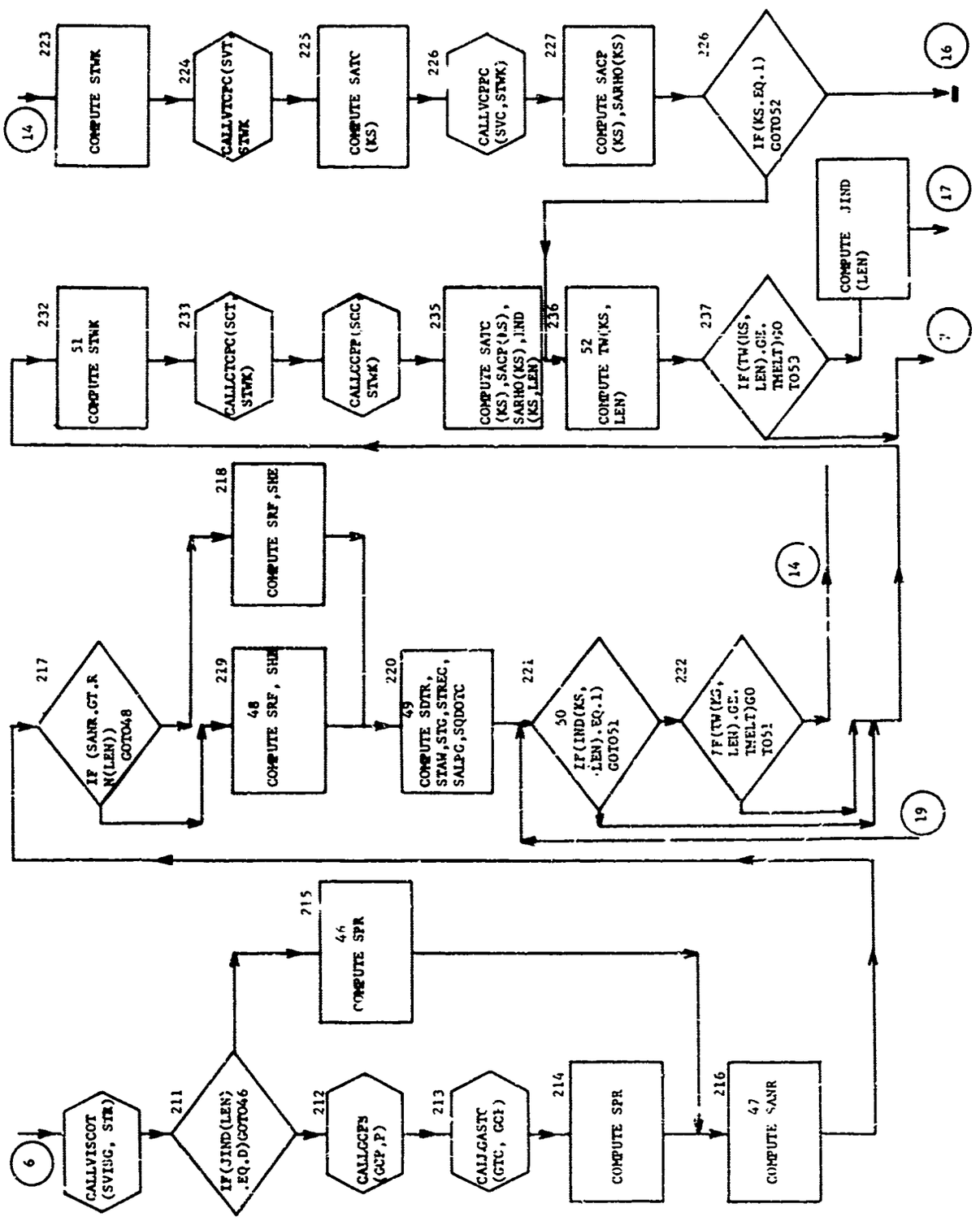
6
CALLVISCOT (SVISC, STK)
211
IF(JIND(LEN) .EQ.D)GOTO46
212
CALLGCPS (GCP,P)
213
CALLGASTC (GTC, GCI)
214
COMPUTE SPR
215
46 COMPUTE SPR
216
47 COMPUTE SANR
217
IF (SANR.GT.R N(LEN)) GOTO48
218
COMPUTE SRF,SHE
219
48 COMPUTE SRF, SHE
220
49 COMPUTE SDTR, STAW,STG,STREC, SALPC,SQDOTC
221
50 IF(IND(KS, LEN).EQ.1) GOTO51
222
IF(TW(KS, LEN).GE. TMELT)GO TO51
14
19
14
223
COMPUTE STWK
224
CALLVTCPC(SVT STWK
225
COMPUTE SATC (KS)
226
CALLVCPPC (SVC,STWK)
227
COMPUTE SACP (KS),SARHO(KS)
126
IF(KS.EQ.1) GOTO52
16
17
232
51 COMPUTE STWK
233
CALLTCPC(SCT STWK)
CALLCCPP(SCC STWK)
235
COMPUTE SATC (KS),SACP(KS), SARHO(KS),JIND (KS,LEN)
236
52 COMPUTE TW(KS, LEN)
237
IF(TW(KS, LEN).GE. TMELT)GO TO53
COMPUTE JIND (LEN)

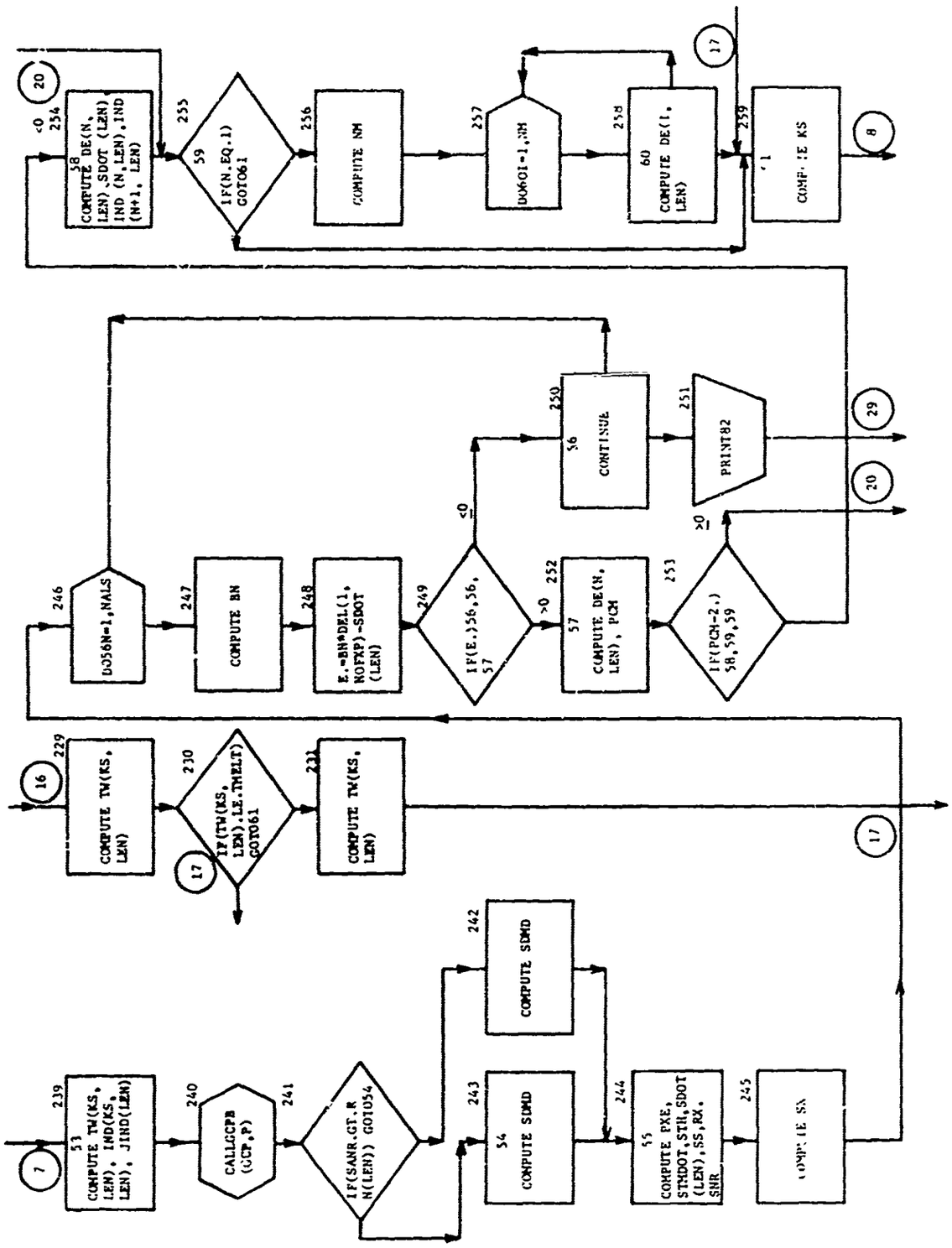
7
239
53
COMPUTE TW(KS, LEN), IMD(KS, LEN), JIND(LEN)
240
CALLCPB (GCP,P)
241
IF(SANR.GT.R N(LEN)) GOTO54
242
COMPUTE SDMD
243
54
COMPUTE SDMD
244
55
COMPUTE PXE, STMDOT,STH,SDOT (LEN),SS,RX, SNR
245
COMPUTE SS
16
229
COMPUTE TW(KS, LEN)
230
IF(TW(KS, LEN).LE.TMELT) GOTO61
17
231
COMPUTE TW(KS, LEN)
17
246
DO56N=1,NALS
247
COMPUTE BN
248
E.=BN*DEL(1, NOFXP)-SDOT (LEN)
249
IF(E.)56,56, 57
<0
>0
250
56
CONTINUE
251
PRINT82
29
20
252
57
COMPUTE DE(N, LEN), PCM
253
IF(PCM-2.) 58,59,59
≥0
20
<0
254
58
COMPUTE DE(N, LEN),SDOT (LEN) IND (N,LEN),IND (N+1, LEN)
255
59
IF(N.EQ.1) GOTO61
256
COMPUTE NM
257
DO60I=1,NM
258
60
COMPUTE DE(I, LEN)
17
259
61
COMPUTE KS
8

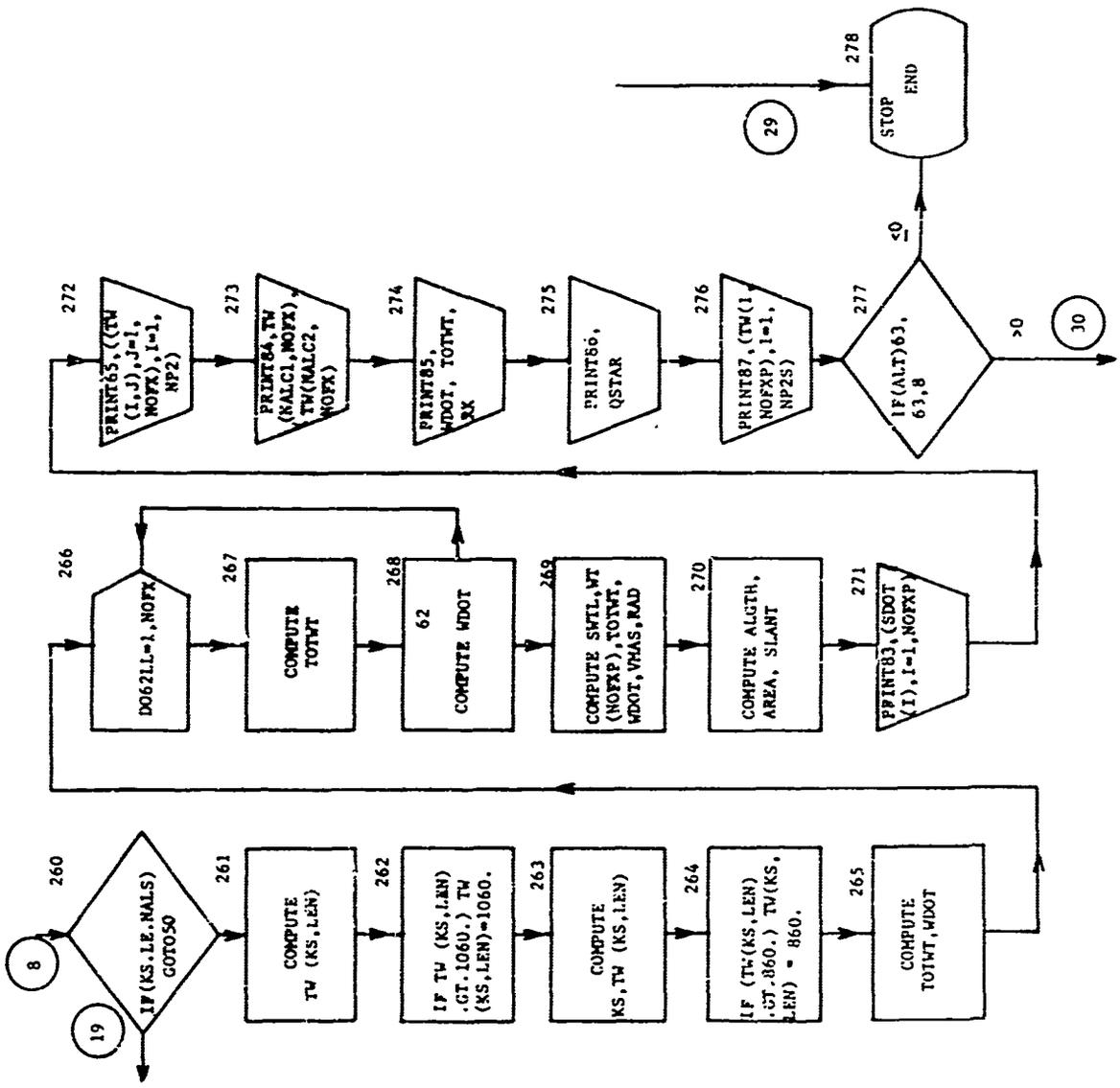
8
19
260
IF(KS.LE.NALS) GOTO50
261
COMPUTE TW (KS,LEN)
262
IF TW (KS,LEN) .GT.1060.) TW (KS,LEN)=1060.
263
COMPUTE KS,TW (KS,LEN)
264
IF (TW(KS,LEN) .GT.860.) TW(KS, LEN) = 860.
265
COMPUTE TOTWT,WDOT
266
DO62LL=1,NOFX
267
COMPUTE TOTWT
268
62
COMPUTE WDOT
269
COMPUTE SWTL,WT (NOFXP),TOTWT, WDOT,VHAS,RAD
270
COMPUTE ALGTH, AREA, SLANT
271
PRINT83,(SDOT (I),I=1,NOFXP)
272
PRINT65,((TW (I,J),J=1, NOFX),I=1, NP2)
273
PRINT84,TW (NALC1,NOFX), TW(NALC2, NOFX)
274
PRINT85, WDOT, TOTWT, RX
275
PRINT86, QSTAR
276
PRINT87,(TW(I, NOFXP),I=1, NP25)
277
IF(ALT)63, 63,8
≤0
>0
30
29
278
STOP
END

This page intentionally left blank.

APPENDIX I

STRAB-6 PROGRAM LISTING

```
      PROGRAM STRAB62 (INPUT,OUTPUT)
C     6 DEGREE TRAJECTORY WITH ABLATION HEATING AND STAG                A   2
      COMMON /A/ RE                                                     A   3
      COMMON /B/ AREA,RAD,SLANT,SNR,THETC,V                             A   4
      COMMON /C/ CPM,CP,CAN,CPB,CDF                                     A   5
      COMMON /D/ TW(50,12),IND(50,12),JIND(12),VCP(50,12),VTC(50,12),VRH A   6
     1O(50,12),DEL(50,12),DE(50,12),SDOT(12),XI(12),RS(12),RL(12),SOL(12 A   7
     2),WT(12),TM(12),TWT(12),SACP(50),SATC(50),SARHO(50),RN(12),QSTR(12 A   8
     3),QDOTC(12),QTOT(12),QCOND(12)                                    A   9
      COMMON /E/ NOFXM,NAL,ALT,AMACH,QD,AMACHE,TEMPE,RHOE,VE,VISG,PBE,AN A  10
     1RE                                                                A  11
      COMMON /F/ NOFX,ALGTH,RADI,POS(11),AZN,GLAT                       A  12
C     VEHICLE DATA                                                      A  13
C     IF NOFX IS CHANGED CHANGE FORMAT 103                              A  14
C     IF CONE ANGLE IS CHANGED SUB CDSF MUST BE CHANGED                 A  15
      DATA SNR,THETC,BI,SM/.0208,.07853,6.27836,.59718/                 A  16
      DATA PI,E,AJ,GRAV,G/3.14159,2.7183,778.,32.174,32.174/            A  17
      DATA REQ,PE,ET,WE/20.927491E+06,.673852E-02,.08181333,0.7292E-04/ A  18
      DATA NOFX,NAL,NALC,NALS/8,4,10,35/                                A  19
      DATA DELT,DT,H,BT,AT/.05,.0005,.001,.05,1./                       A  20
      DATA AZN,GLAT,DLON,GAMMA/154.,33.996,-107.5,-22.39/               A  21
      DATA V,Z,ALPHA/15167.,2.50E+05,7./                                A  22
      DATA (POS(I),I=1,8)/6.607,18.570,30.533,42.496,54.459,66.422,78.38 A  23
     15,86.469/                                                         A  24
      AIZ=0.51                                                          A  25
      AIX=23.08                                                         A  26
      CALL INITIAL (SNR,THETC,SLANT)                                    A  27
      ALGTHI=ALGTH                                                      A  28
      SNRI=SNR                                                          A  29
      CLAT1=ATAN((1.-ET**2)*TAN(GLAT))                                  A  30
      CLAT=CLAT1*180./PI                                                A  31
      ETA1=GLAT-CLAT1                                                   A  32
      PHN=(90.-GAMMA-ALPHA)*PI/180.                                     A  33
      PPH=0.0                                                           A  34
      PH=(1.+PPH)*PHN                                                   A  35
      DLGG=DLON                                                         A  36
      PH1=PH                                                            A  37
      VMAC=BI                                                           A  38
      RAD=RADI                                                          A  39
      NOFXP=NOFX+1                                                      A  40
      NOFXM=NOFX-1                                                      A  41
      AKL1=5370.                                                        A  42
      AKT1=4240.                                                        A  43
      AKL2=5.37                                                         A  44
      AKT2=5.77                                                         A  45
      GVIS=4.429E-5                                                     A  46
      TOL=.00854                                                        A  47
      TMELT=6760.                                                       A  48
      TEM=544.                                                          A  49
      NALT=NAL                                                          A  50
      NP1=NAL+1                                                         A  51
      NP2=NAL+2                                                         A  52
      NALC1=NALC+1                                                      A  53
      NALC2=NALC+2                                                      A  54
      NP1S=NALS+1                                                       A  55
      NP2S=NALS+2                                                       A  56
      RHOV=90.4                                                         A  57
      RHOC=74.                                                          A  58
      ATJRHO=120.96                                                     A  59
      CPA=.2395                                                         A  60
      DO 1 J=1,NOFXP                                                    A  61
```

```
      JIND(J)=0
1     SDOT(J)=0.
      DO 2 J=1,NOFXM
      VCP(NP1,J)=.315
      VCP(NP2,J)=.208
      VTC(NP1,J)=.74E-04
      VTC(NP2,J)=.03694
      VRHO(NP1,J)=91.7
      VRHO(NP2,J)=169.
      DO 2 I=1,NP2
      TW(I,J)=TEM
2     IND(I,J)=0
      DO 3 I=1,NAL
      DO 3 J=1,NOFXM
      DEL(I,J)=TOL
3     DE(I,J)=TOL
      DO 4 I=1,NOFXM
      DEL(NP1,I)=.00333
      DE(NP1,I)=.00333
      DEL(NP2,I)=.005
4     DE(NP2,I)=.005
      DO 5 I=1,NALS
      IND(I,NOFXP)=0
      DEL(I,NOFXP)=TOL
5     DE(I,NOFXP)=TOL
      TEMP=298.2
      TAW=TEMP
      PHI=80.967
      STAW=TEMP
      STOL=TOL
      SX=.01745*RS(NOFXP)*PHI
      RX=SNR
      VCP(NALC1,NOFX)=.315
      VCP(NALC2,NOFX)=.208
      VTC(NALC1,NOFX)=.74E-04
      VTC(NALC2,NOFX)=.03694
      VRHO(NALC1,NOFX)=91.7
      VRHO(NALC2,NOFX)=169.
      DO 6 I=1,NALC2
      TW(I,NOFX)=TEM
      IND(I,NOFX)=0
      DEL(I,NOFX)=TOL
6     DE(I,NOFX)=TOL
      DEL(NALC1,NOFX)=.00333
      DE(NALC1,NOFX)=.00333
      DEL(NALC2,NOFX)=.005
      DE(NALC2,NOFX)=.005
      DE(NP2S,NOFXP)=.005
      DEL(NP2S,NOFXP)=.005
      DE(NP1S,NOFXP)=.00333
      DEL(NP1S,NOFXP)=.00333
      SACP(NP1S)=.315
      SACP(NP2S)=.208
      SATC(NP1S)=.74E-04
      SATC(NP2S)=.03694
      SARHO(NP1S)=91.7
      SARHO(NP2S)=169.
      DO 7 N=1,NP2S
7     TW(N,NOFXP)=TEM
      PSI=0.
      DAZ=0.0
      AZ=(1.000+DAZ)*AZN
```

```
      SGLAT=SIN(GLAT)
      CGLAT=COS(GLAT)                                                   A 124
      SAZ=SIN(AZ)                                                       A 125
      CAZ=COS(AZ)                                                       A 126
      WEX=-WE*CGLAT*SAZ                                                 A 127
      WEY=WE*CGLAT*CAZ                                                  A 128
      WEZ=WE*SGLAT                                                      A 129
      RE1=REQ/(1.000+PE*(SIN(CLAT1))**2)**.500                          A 130
      RE=RE1                                                            A 131
      RXH=RE1*SIN(ETA1)*SAZ                                             A 132
      RYH=-RE1*SIN(ETA1)*CAZ                                            A 133
      RZH=RE1*COS(ETA1)                                                 A 134
      T=0.0                                                             A 135
      X=0.0                                                             A 136
      DX=0.0                                                            A 137
      Y=0.0                                                             A 138
      PPH=0.0                                                           A 139
      PH=(1.0+PPH)*PHN                                                  A 140
      DZ=V*SIN(GAMMA*PI/180.)                                           A 141
      DY=V*COS(GAMMA*PI/180.)                                           A 142
      LLL=0                                                             A 143
      ALT=Z                                                             A 144
      TH=0.0                                                            A 145
      DTH=0.0                                                           A 146
      DPH=0.0                                                           A 147
      PS=0.0                                                            A 148
      DELPS=0.0                                                         A 149
      DPSN=2.*PI                                                        A 150
      DPS=(1.+DELPS)*DPSN                                               A 151
      U=0.1407639E+17                                                   A 152
      BJ=1623.41E-06                                                    A 153
      BH=6.04E-06                                                       A 154
      BK=6.37E-06                                                       A 155
      AREA=PI*RAD**2                                                    A 156
      DIA=1.781                                                         A 157
      DCD=0.00                                                          A 158
      D2X=0.0                                                           A 159
      D2Y=0.0                                                           A 160
      D2Z=0.0                                                           A 161
      D2TH=0.0                                                          A 162
      D2PH=0.0                                                          A 163
      D2PS=0.0                                                          A 164
      PRINT 71                                                          A 165
      PRINT 72, (JIND(I),I=1,NOFXP)                                     A 166
      PRINT 92, (SDOT(I),I=1,NOFXP)                                     A 167
      PRINT 73, ((IND(I,J),J=1,NOFX),I=1,NALC2)                         A 168
      PRINT 74, ((VCP(I,J),J=1,NOFX),I=1,NALC2)                         A 169
      PRINT 75, ((VTC(I,J),J=1,NOFX),I=1,NALC2)                         A 170
      PRINT 76, ((VRHO(I,J),J=1,NOFX),I=1,NALC2)                        A 171
      PRINT 77, ((DEL(I,J),J=1,NOFX),I=1,NALC2)                         A 172
      PRINT 78, ((DE(I,J),J=1,NOFX),I=1,NALC2)                          A 173
      PRINT 79, ((TW(I,J),J=1,NOFX),I=1,NALC2)                          A 174
      PRINT 71                                                          A 175
      PRINT 80                                                          A 176
      CALL VSD (VS,ALT)                                                 A 177
      CALL RHOF (RHO,ALT)                                               A 178
      AMACH=V/VS                                                        A 179
      CALL VISCO (VIS,ALT)                                              A 180
      ANR=RHO*V*SLANT/VIS                                               A 181
      CALL CDSF (CD,AMACH,ANR)                                          A 182
      QD=.5*RHO*V**2                                                    A 183
      ALPT=ABS(ALPHA)                                                   A 184
                                                                        A 185
```

```
      PRINT 81, T,X,Y,Z,ALT,GAMMA,VMAS,PSI,V,QD,AMACH,CD,ANR,PH1,THE,ALP
     1,BET,PS,ALPT,XE,YE,ZE,FD,FN,GFZ,CLAT,DLON,ABETA,GCIR,AIZ,AIX
      LLL=LLL+1
      GO TO 9
8     D2X=FX/VMAS-2.*DA-C*WEY+B*WEZ+GX
      D2Y=FY/VMAS-2.*DB-A*WEZ+C*WEY+GY
      D2Z=FZ/VMAS-2.*DC-B*WEX+A*WEY+GZ
      D2TH=TY/AIX-WX2*OZ2+AIZ*WZ2*OX2/AIX-DWEY2
      D2PH=(-TX/AIX+AIZ*WZ2*OY2/AIX-WY2*OZ2+DPH*DTH*SIN(TH)+DWEX2)/COS(T
     1H)
      D2PS=TZ/AIZ-AIX*WY2*OX2/AIZ+AIX*WX2*OY2/AIZ+D2PH*SIN(TH)+DPH*DTH*C
     1OS(TH)-DWEZ2
      CALL CDSF (CD,AMACH,ANR)
      PER=1.+.0375*ALPT+.00156*ALPT**2.
      CD=CD*PER
9     X1=X+DX*H/2.
      DX1=DX+D2X*H/2.
      Y1=Y+DY*H/2.
      DY1=DY+D2Y*H/2.
      Z1=Z+DZ*H/2.
      DZ1=DZ+D2Z*H/2.
      TH1=TH+DTH*H/2.
      DTH1=DTH+D2TH*H/2.
      PH1=PH+DPH*H/2.
      DPH1=DPH+D2PH*H/2.
      PS1=PS+DPS*H/2.
      DPS1=DPS+D2PS*H/2.
      X5=X1
      DX5=DX1
      Y5=Y1
      DY5=DY1
      Z5=Z1
      DZ5=DZ1
      TH5=TH1
      DTH5=DTH1
      PH5=PH1
      DPH5=DPH1
      PS5=PS1
      DPS5=DPS1
      QI=1.000
      GO TO 12
10    D2X1=FX/VMAS-2.*DA-C*WEY+B*WEZ+GX
      D2Y1=FY/VMAS-2.*DB-A*WEZ+C*WEX+GY
      D2Z1=FZ/VMAS-2.*DC-B*WEX+A*WEY+GZ
      D2TH1=TY/AIX-WX2*OZ2+AIZ*WZ2*OX2/AIX-DWEY2
      D2PH1=(-TX/AIX+AIZ*WZ2*OY2/AIX-WY2*OZ2+DPH5*DTH5*STH5+DWEX2)/CTH5
      D2PS1=TZ/AIZ-AIX*WY2*OX2/AIZ+AIX*WX2*OY2/AIZ+D2PH1*STH5+DPH5*DTH5*
     1CTH5-DWEZ2
      X2=X+DX1*H/2.
      DX2=DX+D2X1*H/2.
      Y2=Y+DY1*H/2.
      DY2=DY+D2Y1*H/2.
      Z2=Z+DZ1*H/2.
      DZ2=DZ+D2Z1*H/2.
      TH2=TH+DTH1*H/2.
      DTH2=DTH+D2TH1*H/2.
      PH2=PH+DPH1*H/2.
      DPH2=DPH+D2PH1*H/2.
      PS2=PS+DPS1*H/2.
      DPS2=DPS+D2PS1*H/2.
      X5=X2
      DX5=DX2
```

```
      Y5=Y2                                                             A 248
      DY5=DY2                                                           A 249
      Z5=Z2                                                             A 250
      DZ5=DZ2                                                           A 251
      TH5=TH2                                                           A 252
      DTH5=DTH2                                                         A 253
      PH5=PH2                                                           A 254
      DPH5=DPH2                                                         A 255
      PS5=PS2                                                           A 256
      DPS5=DPS2                                                         A 257
      QI=2.000                                                          A 258
      GO TO 13                                                          A 259
11    D2X2=FX/VMAS-2.*DA-C*WEY+B*WEZ+GX                                 A 260
      D2Y2=FY/VMAS-2.*DB-A*WEZ+C*WEX+GY                                 A 261
      D2Z2=FZ/VMAS-2.*DC-B*WEX+A*WEY+GZ                                 A 262
      D2TH2=TY/AIX-WX2*OZ2+AIZ*WZ2*OX2/AIX-DWEY2                        A 263
      D2PH2=(-TX/AIX+AIZ*WZ2*OY2/AIX-WY2*OZ2+DPH5*DTH5*STH5+DWEX2)/CTH5 A 264
      D2PS2=TZ/AIZ-AIX*WY2*OX2/AIZ+AIX*WX2*OY2/AIZ+D2PH2*STH5+DPH5*DTH5* A 265
     1CTH5-DWEZ2                                                        A 266
      X3=X+DX2*H/2.                                                     A 267
      DX3=DX+D2X2*H/2.                                                  A 268
      Y3=Y+DY2*H/2.                                                     A 269
      DY3=DY+D2Y2*H/2.                                                  A 270
      Z3=Z+DZ2*H/2.                                                     A 271
      DZ3=DZ+D2Z2*H/2.                                                  A 272
      TH3=TH+DTH2*H/2.                                                  A 273
      DTH3=DTH+D2TH2*H/2.                                               A 274
      PH3=PH+DPH2*H/2.                                                  A 275
      DPH3=DPH+D2PH2*H/2.                                               A 276
      PS3=PS+DPS2*H/2.                                                  A 277
      DPS3=DPS+D2PS2*H/2.                                               A 278
      X5=X3                                                             A 279
      DX5=DX3                                                           A 280
      Y5=Y3                                                             A 281
      DY5=DY3                                                           A 282
      Z5=Z3                                                             A 283
      DZ5=DZ3                                                           A 284
      TH5=TH3                                                           A 285
      DTH5=DTH3                                                         A 286
      PH5=PH3                                                           A 287
      DPH5=DPH3                                                         A 288
      PS5=PS3                                                           A 289
      DPS5=DPS3                                                         A 290
      QI=3.000                                                          A 291
12    T=T+DT                                                            A 292
13    R=SQRT((RXH+X5)**2+(RYH+Y5)**2+(RZH+Z5)**2)                       A 293
      ZE=(RZH+Z5)*SGLAT-CGLAT*((RXH+X5)*SAZ-(RYH+Y5)*CAZ)               A 294
      AL=ASIN(ZE/R)                                                     A 295
      CAL=COS(AL)                                                       A 296
      SAL=SIN(AL)                                                       A 297
      CLAT=AL*180./PI                                                   A 298
      RE=REQ/(1.000+PE*SAL**2)**.500                                    A 299
      ALT=R-RE                                                          A 300
      YE=(RXH+X5)*CAZ+(RYH+Y5)*SAZ                                      A 301
      XE=(RZH+Z5)*CGLAT+SGLAT*((RXH+X5)*SAZ-(RYH+Y5)*CAZ)               A 302
      CALL LONG (DLG,XE,YE,PI)                                          A 303
      CLG=COS(DLG)                                                      A 304
      SLG=SIN(DLG)                                                      A 305
      DLON=DLGG+DLG*180./PI                                             A 306
      GCIR=((RE+RE1)/2.)*ACOS(SAL*SIN(CLAT1)+CAL*COS(CLAT1)*COS(AL-CLAT1 A 307
     1))                                                                A 308
      G11=-SGLAT*CAL*CLG+CGLAT*SAL                                      A 309
```

```
G12=SGLAT*SAL*CLG+CGLAT*CAL                                          A 310
G21=-CAL*SLG                                                         A 311
G22=SAL*SLG                                                          A 312
G31=-CGLAT*CAL*CLG-SGLAT*SAL                                         A 313
G32=+CGLAT*SAL*CLG-SGLAT*CAL                                         A 314
P12=1.-3.*SAL**2                                                     A 315
P13=3.*SAL-5.*SAL**3                                                 A 316
P14=3.-30.*SAL**2+35.*SAL**4                                         A 317
P15=SIN(2.*AL)                                                       A 318
P6=CAL*(1.-5.*SAL**2)                                                A 319
P7=SAL*CAL*(-3.+7.*SAL**2)                                           A 320
GR=+U/R**2*(1.+BJ*(REQ/R)**2*P12+4./5.*BH*(REQ/R)**3*P13+BK/6.*(RE   A 321
1Q/R)**4*P14)                                                        A 322
GL=U/R**2*(-BJ*(REQ/R)**2*P15+3./5.*BH*(REQ/R)**3*P6+2./3.*BK*(REQ   A 323
1/R)**4*P7)                                                          A 324
GX=GR*(G11*SAZ+G21*CAZ)+GL*(G12*SAZ+G22*CAZ)                         A 325
GY=GR*(G21*SAZ-G11*CAZ)+GL*(G22*SAZ-G12*CAZ)                         A 326
GZ=GR*G31+GL*G32                                                     A 327
CPS5=COS(PS5)                                                        A 328
SPS5=SIN(PS5)                                                        A 329
STH5=SIN(TH5)                                                        A 330
CTH5=COS(TH5)                                                        A 331
SPH5=SIN(PH5)                                                        A 332
CPH5=COS(PH5)                                                        A 333
A11=CPS5*CTH5                                                        A 334
A12=SPS5*CPH5-STH5*SPH5*CPS5                                         A 335
A13=-CPS5*STH5*CPH5-SPS5*SPH5                                        A 336
A21=-SPS5*CTH5                                                       A 337
A22=SPS5*STH5*SPH5+CPS5*CPH5                                         A 338
A23=SPS5*STH5*CPH5-SPH5*CPS5                                         A 339
A31=STH5                                                             A 340
A32=CTH5*SPH5                                                        A 341
A33=CTH5*CPH5                                                        A 342
A=WEY*(RZH+Z5)-(RYH+Y5)*WEZ                                          A 343
B=WEZ*(RXH+X5)-(RZH+Z5)*WEX                                          A 344
C=WEX*(RYH+Y5)-(RXH+X5)*WEY                                          A 345
DA=DZ5*WEY-DY5*WEZ                                                   A 346
DB=DX5*WEZ-DZ5*WEX                                                   A 347
DC=DY5*WEX-DX5*WEY                                                   A 348
B11=CTH5                                                             A 349
B12=-STH5*SPH5                                                       A 350
B13=-STH5*CPH5                                                       A 351
B21=0.                                                               A 352
B22=CPH5                                                             A 353
B23=-SPH5                                                            A 354
B31=STH5                                                             A 355
B32=CTH5*SPH5                                                        A 356
B33=CTH5*CPH5                                                        A 357
DB11=-DTH5*STH5                                                      A 358
DB12=-DTH5*CTH5*SPH5-DPH5*CPH5*STH5                                  A 359
DB13=-DTH5*CTH5*CPH5+DPH5*SPH5*STH5                                  A 360
DB21=0.                                                              A 361
DB22=-DPH5*SPH5                                                      A 362
DB23=-DPH5*CPH5                                                      A 363
DB31=DTH5*CTH5                                                       A 364
DB32=DPH5*CPH5*CTH5-DTH5*STH5*SPH5                                   A 365
DB33=-DTH5*STH5*CPH5-DPH5*SPH5*CTH5                                  A 366
WEX2=B11*WEX+B12*WEY+B13*WEZ                                         A 367
WEY2=B21*WEX+B22*WEY+B23*WEZ                                         A 368
WEZ2=B31*WEX+B32*WEY+B33*WEZ                                         A 369
DWEX2=DB11*WEX+DB12*WEY+DB13*WEZ                                     A 370
DWEY2=DB21*WEX+DB22*WEY+DB23*WEZ                                     A 371
```

```
      DWEZ2=DB31*WEX+DB32*WEY+DB33*WEZ                                  A 372
      WX2=WEX2-DPH5*CTH5                                                A 373
      WY2=WEY2+DTH5                                                     A 374
      WZ2=WEZ2+DPS5-DPH5*STH5                                           A 375
      OX2=WX2                                                           A 376
      OY2=WY2                                                           A 377
      OZ2=WEZ2-DPH5*STH5                                                A 378
      VRX=DX5                                                           A 379
      VRY=DY5                                                           A 380
      VRZ=DZ5                                                           A 381
      VR=SQRT(VRX**2+VRY**2+VRZ**2)                                     A 382
      V=SQRT(DX5**2+DY5**2+DZ5**2)                                      A 383
      CALL RHOF (RHO,ALT)                                               A 384
      CALL VISCO (VIS,ALT)                                              A 385
      QD=.5*RHO*V**2                                                    A 386
      CALL VSD (VS,ALT)                                                 A 387
      AMACH=V/VS                                                        A 388
      ANR=RHO*V*SLANT/VIS                                               A 389
      VRX4=A11*VRX+A12*VRY+A13*VRZ                                      A 390
      VRY4=A21*VRX+A22*VRY+A23*VRZ                                      A 391
      VRZ4=A31*VRX+A32*VRY+A33*VRZ                                      A 392
      WX3=-DPH5*CTH5*CPS5+DTH5*SPS5                                     A 393
      WY3=DPH5*CTH5*SPS5+DTH5*CPS5                                      A 394
      WZ3=DPS5-DPH5*STH5                                                A 395
      CALL ATTK (VRZ4,VRY4,ALP,PI)                                      A 396
      CALL SSLP (VRZ4,VRX4,BET,PI)                                      A 397
      ALPT=ABS(ALP)                                                     A 398
      ALPT=ALPT*180./PI                                                 A 399
      ALP=ALP*180./PI                                                   A 400
      BET=BET*180./PI                                                   A 401
      ALP1=ABSF(ALP)                                                    A 402
      BET1=ABSF(BET)                                                    A 403
      CALL ACMQ (CMQ,AMACH)                                             A 404
      CALL ACNA (CNA,AMACH)                                             A 405
C     CNA PER DEGREE                                                    A 406
C     CMQ PER RADIAN                                                    A 407
      CNR=CMQ                                                           A 408
      CMA=-SM*CNA/DIA                                                   A 409
      CM=CMA*ALP+CMQ*WX3*DIA/(2.*V)                                     A 410
      TM=CM*QD*AREA*DIA                                                 A 411
      FN=CNA*QD*AREA*ALP                                                A 412
      CNB=-CMA                                                          A 413
      CYB=-CNA                                                          A 414
      CN=CNB*BET+CNR*WY3*DIA/(2.*V)                                     A 415
      TN=CN*QD*AREA*DIA                                                 A 416
      FY1=CYB*QD*AREA*BET                                               A 417
      TL=0.                                                             A 418
      FD=CD*QD*AREA                                                     A 419
      FX3=FY1                                                           A 420
      FY3=-FN                                                           A 421
      FZ3=-FD                                                           A 422
      GFX=FX3/(VMAS*GRAV)                                               A 423
      GFY=(FY3-VMAS*GRAV*SIN(PH))/(VMAS*GRAV)                           A 424
      GFZ=(FZ3+VMAS*GRAV*COS(PH))/(VMAS*GRAV)                           A 425
      ABETA=VMAS*GRAV/(CD*AREA)                                         A 426
      FX=A11*FX3+A21*FY3+A31*FZ3                                        A 427
      FY=A12*FX3+A22*FY3+A32*FZ3                                        A 428
      FZ=A13*FX3+A23*FY3+A33*FZ3                                        A 429
      TX3=TM                                                            A 430
      TY3=TN                                                            A 431
      TZ3=TL                                                            A 432
      TX=TX3*CPS5-TY3*SPS5                                              A 433
```

```
      TY=TX3*SPS5+TY3*CPS5                                              A 434
      TZ=TZ3                                                            A 435
      IF (4.000-QI) 15,18,14                                            A 436
14    IF (1.000-QI) 16,10,15                                            A 437
15    GO TO 69                                                          A 438
16    IF (2.000-QI) 17,11,15                                            A 439
17    D2X3=FX/VMAS-2.*DA-C*WEY+B*WEZ+GX                                 A 440
      D2Y3=FY/VMAS-2.*DB-A*WEZ+C*WEX+GY                                 A 441
      D2Z3=FZ/VMAS-2.*DC-B*WEX+A*WEY+GZ                                 A 442
      D2TH3=TY/AIX-WX2*OZ2+AIZ*WZ2*OX2/AIX-DWEY2                        A 443
      D2PH3=(-TX/AIX+AIZ*WZ2*OY2/AIX-WY2*OZ2+DPH5*DTH5*STH5+DWEX2)/CTH5 A 444
      D2PS3=TZ/AIZ-AIX*WY2*OX2/AIZ+AIX*WX2*OY2/AIZ+D2PH3*STH5+DPH5*DTH5* A 445
     1CTH5-DWEZ2                                                        A 446
      DELX=H/6.*(DX+2.*DX1+2.*DX2+DX3)                                  A 447
      DELDX=H/6.*(D2X+2.*D2X1+2.*D2X2+D2X3)                             A 448
      DELY=H/6.*(DY+2.*DY1+2.*DY2+DY3)                                  A 449
      DELDY=H/6.*(D2Y+2.*D2Y1+2.*D2Y2+D2Y3)                             A 450
      DELZ=H/6.*(DZ+2.*DZ1+2.*DZ2+DZ3)                                  A 451
      DELDZ=H/6.*(D2Z+2.*D2Z1+2.*D2Z2+D2Z3)                             A 452
      DELTH=H/6.*(DTH+2.*DTH1+2.*DTH2+DTH3)                             A 453
      DELDTH=H/6.*(D2TH+2.*D2TH1+2.*D2TH2+D2TH3)                        A 454
      DELPH=H/6.*(DPH+2.*DPH1+2.*DPH2+DPH3)                             A 455
      DELDPH=H/6.*(D2PH+2.*D2PH1+2.*D2PH2+D2PH3)                        A 456
      DELPS=H/6.*(DPS+2.*DPS1+2.*DPS2+DPS3)                             A 457
      DELDPS=H/6.*(D2PS+2.*D2PS1+2.*D2PS2+D2PS3)                        A 458
      X=X+DELX                                                          A 459
      DX=DX+DELDX                                                       A 460
      Y=Y+DELY                                                          A 461
      DY=DY+DELDY                                                       A 462
      Z=Z+DELZ                                                          A 463
      DZ=DZ+DELDZ                                                       A 464
      TH=TH+DELTH                                                       A 465
      DTH=DTH+DELDTH                                                    A 466
      PH=PH+DELPH                                                       A 467
      DPH=DPH+DELDPH                                                    A 468
      PS=PS+DELPS                                                       A 469
      DPS=DPS+DELDPS                                                    A 470
      X5=X                                                              A 471
      DX5=DX                                                            A 472
      Y5=Y                                                              A 473
      DY5=DY                                                            A 474
      Z5=Z                                                              A 475
      DZ5=DZ                                                            A 476
      TH5=TH                                                            A 477
      DTH5=DTH                                                          A 478
      PH5=PH                                                            A 479
      DPH5=DPH                                                          A 480
      PS5=PS                                                            A 481
      DPS5=DPS                                                          A 482
      QI=4.000                                                          A 483
      GO TO 13                                                          A 484
18    THE=TH*180./PI                                                    A 485
      PHI=PH*180./PI                                                    A 486
      GAMMA=ATAN(DZ5/DY5)*180./PI                                       A 487
      PSI=ATAN(DX5/DY5)*180./PI                                         A 488
      BTL=BT-H/4.                                                       A 489
      BTH=BT+H/6.                                                       A 490
      IF (ALT.LE.0.0) GO TO 20                                          A 491
      IF (T.GT.BTL.AND.T.LT.BTH) GO TO 19                               A 492
      GO TO 8                                                           A 493
19    BT=BT+.05                                                         A 494
C     ******************************************************************A 495
```

```
C     ************************************************************
20    WL=0.0
      DO 49 LEN=1,NOFX
      WL=WL+SCL(LEN)
      IF (LEN.LT.NOFX) GO TO 21
      WL=.25
      NAL=NALC
21    DO 22 N=1,NAL
      AN=N
      IF (AN*DEL(1,1)-SDOT(LEN)) 22,22,23
22    CONTINUE
      PRINT 84
      GO TO 69
23    K=N
      IF (LEN.GE.NOFX) TMELT=6400.
      TR=TEMPE+.58*(TW(K,LEN)-TEMPE)+.19*(TAW-TEMPE)
      CALL TEMPA (TEMP,ALT)
      CALL TCAT (TCA,TR)
      CALL VISCOT (VISE,TEMPE)
      CALL VISCOT (VISG,TR)
      CALL PRESS (PRE,ALT)
      AM=AMACH
      PBL=PRE*(1.+2.8*AM**2*(SIN(THETC))**2*(2.5+8.*AM*SIN(THETC))/(1.+1
     16.*AM*SIN(THETC)))
      P=PBL/2116.2
      IF (JIND(LEN).EQ.0) GO TO 24
C     ************************************************************
      CALL GCPB (GCP,P)
      IF (LEN.GE.NOFX) GCP=.4
C     ************************************************************
      CALL GASTC (GTC,GCP)
      PR=GCP*GVIS/GTC
      GO TO 25
24    PR=CPA*VISG/TCA
25    HNRE=RHOE*VE*WL/VISE*G
      RHOS=PBE/(1716.*TR)
      ANRR=RHOS*VE*WL/VISG*G
      IF (HNRE.GT.RN(LEN)) GO TO 26
      RF=PR**.5
      HE=.575*TCA/WL*PR**.33*HNRE**.5*(VISG/VISE*RHOS/RHOE)**.5
      GO TO 27
26    RF=PR**.33
      HE=.0296*TCA/WL*PR**.33*HNRE**.8*(VISG/VISE)**.2*(RHOS/RHOE)**.8
27    DTR=VE**2/(2.*G*AJ*CPA)
      TAW=TEMPE+RF*DTR
      QDOTC(LEN)=HE*(TAW-TW(K,LEN))
28    IF (IND(K,LEN).EQ.1) GO TO 33
      IF (TW(K,LEN)-TMELT) 29,33,33
29    TWK=TW(K,LEN)
      IF (LEN.GE.NOFX) GO TO 30
      CALL VTCPC (VT,TWK)
      CALL VCPPC (VC,TWK)
      VRHO(K,LEN)=RHOV
      GO TO 31
30    CALL TCATJ (VT,TWK)
      CALL CPATJ (VC,TWK)
      VRHO(K,LEN)=ATJRHO
31    VTC(K,LEN)=VT
      VCP(K,LEN)=VC
      IF (K.EQ.1) GO TO 36
      P1=VTC(K-1,LEN)*(TW(K-1,LEN)-TW(K,LEN))/(VRHO(K-1,LEN)*VCP(K-1,LEN
     1)*DE(K-1,LEN)**2)
```

```
      P2=VTC(K,LEN)*(TW(K,LEN)-TW(K+1,LEN))/(VRHO(K,LEN)*VCP(K,LEN)*DE(K
     1,LEN)**2)
      TW(K,LEN)=TW(K,LEN)+DELT*(P1-P2)
      IF (TW(K,LEN)-TMELT) 48,32,32
32    TW(K,LEN)=TMELT-1.
      GO TO 48
33    TWK=TW(K,LEN)
      IF (LEN.GE.NOFX) GO TO 34
      CALL CTCPC (CT,TWK)
      CALL CCPP (CC,TWK)
      VRHO(K,LEN)=RHOC
      GO TO 35
34    CALL TCATJ (CT,TWK)
      CALL CPATJ (CC,TWK)
      VRHO(K,LEN)=ATJRHO
35    VCP(K,LEN)=CC
      VTC(K,LEN)=CT
      IND(K,LEN)=1
36    P3=DELT/(VCP(K,LEN)*VRHO(K,LEN)*DE(K,LEN))*2.
      P4=HE*(TAW-TW(K,LEN))
      P5=VTC(K,LEN)*(TW(K,LEN)-TW(K+1,LEN))/DE(K,LEN)
      HR=CPA*TEMPE+RF*VE**2/(2.*G*AJ)
      QCOND(LEN)=-VTC(K,LEN)*(TW(K,LEN)-TW(K+1,LEN))/DE(K,LEN)
      TW(K,LEN)=TW(K,LEN)+P3*(P4-P5)
      IF (TW(K,LEN)-TMELT) 37,38,38
37    JIND(LEN)=0
      WT(LEN)=0.
      GO TO 48
38    TW(K,LEN)=TMELT
      IND(K,LEN)=1
      JIND(LEN)=1
      CALL GCP8 (GCP,P)
      IF (LEN.GE.NOFX) GCP=.4
      QDOTR=0.
      QTOT(LEN)=QDOTC(LEN)+QCOND(LEN)
      IF (QTOT(LEN).LE.0.0) GO TO 48
      IF (LEN.LT.NOFX) GO TO 39
      DELH=HR-CPA*TMELT
      QSTAR=2000.+2.*DELH
      CDOT=QTOT(LEN)/(QSTAR*ATJRHO)
      GO TO 43
39    IF (HNRE-RN(LEN)) 40,40,41
40    DMD=(QTOT(LEN))/(AKL1+AKL2*(HR-CPA*TMELT))
      GO TO 42
41    DMD=(QTOT(LEN))/(AKT1+AKT2*(HR-CPA*TMELT))
42    PXE=11.05E+04/TMELT
      TMDOT=DMD*(1.+2.64E+09/(PBL**.67*E**PXE))
      CDOT=TMDOT/RHOV
43    SDOT(LEN)=SDOT(LEN)+CDOT*DELT
      JIND(LEN)=1
      DO 44 N=1,NAL
      BN=N
      IF (BN*DEL(1,1)-SDOT(LEN)) 44,44,45
44    CONTINUE
      PRINT 84
      GO TO 69
45    DE(N,LEN)=DEL(N,LEN)-(SDOT(LEN)-(BN-1.)*DEL(1,LEN))
      PCM=VCP(N,LEN)*VRHO(N,LEN)*DE(N,LEN)**2/(DELT*VTC(N,LEN))
      IF (PCM-2.) 46,47,47
46    DE(N,LEN)=0.
      CN=N
      SDOT(LEN)=CN*TOL
```

```
      IND(N+1,LEN)=1                                                    A 620
47    IND(N,LEN)=1                                                      A 621
      WT(LEN)=PI*(RL(LEN)+RS(LEN)-2.*SDOT(LEN))*CDOT*RHOC*SOL(LEN)      A 622
      IF (N.EQ.1) GO TO 48                                              A 623
      DE(N-1,LEN)=0.                                                    A 624
48    K=K+1                                                             A 625
      IF (K.LE.NAL) GO TO 28                                            A 626
      TW(K,LEN)=TW(K,LEN)+DELT*(VTC(K-1,LEN)/(VRHO(K-1,LEN)*VCP(K-1,LEN) A 627
     1*DE(K-1,LEN)**2)*(TW(K-1,LEN)-TW(K,LEN))-VTC(K,LEN)/(VRHO(K,LEN)*V A 628
     2CP(K,LEN)*DEL(K,LEN)**2)*(TW(K,LEN)-TW(K+1,LEN)))                 A 629
      IF (TW(K,LEN).GT.1060.) TW(K,LEN)=1060.                           A 630
      K=K+1                                                             A 631
      TW(K,LEN)=TW(K,LEN)+DELT*(VTC(K-1,LEN)/(VRHO(K-1,LEN)*VCP(K-1,LEN) A 632
     1*DEL(K-1,LEN)**2)*(TW(K-1,LEN)-TW(K,LEN)))                        A 633
      IF (TW(K,LEN).GT.860.) TW(K,LEN)=860.                             A 634
      NAL=NALI                                                          A 635
49    CONTINUE                                                          A 636
C     ***************************************************************** A 637
      LEN=NOFXP                                                         A 638
      DO 50 N=1,NALS                                                    A 639
      AN=N                                                              A 640
      IF (AN*DEL(1,NOFXP)-SDOT(LEN)) 50,50,51                           A 641
50    CONTINUE                                                          A 642
      PRINT 85                                                          A 643
      GO TO 69                                                          A 644
51    KS=N                                                              A 645
      TMELT=6400.                                                       A 646
      STR=TEMP+.58*(TW(KS,LEN)-TEMP)+.19*(STAW-TEMP)                    A 647
      CALL TCAT (STCA,STR)                                              A 648
      CALL VISCOT (SVISG,STR)                                           A 649
      IF (JIND(LEN).EQ.0) GO TO 52                                      A 650
C     ***************************************************************** A 651
      CALL GCPB (GCP,P)                                                 A 652
      IF (LEN.GE.NOFX) GCP=.4                                           A 653
C     ***************************************************************** A 654
      CALL GASTC (GTC,GCP)                                              A 655
      SPR=GCP*GVIS/GTC                                                  A 656
      GO TO 53                                                          A 657
52    SPR=CPA*SVISG/STCA                                                A 658
53    SRF=SPR**.5                                                       A 659
      CALL PRESS(PRE,ALT)                                               A 660
      PTS=PRE*((1.[illegible]AMACH**2)**3.5)*((6.0/(7.0*AMACH**2-1.0))**2.5) A 661
      RHOWS=PTS [illegible]*STR)                                        A 662
      DV=1./SN[illegible]3.*(PTS-PRE)/RHOWS)                            A 663
      GTAB=((1.[illegible]+5.0/(AMACH**2))*(1.0-1.0/(1.4*AMACH**2)))**0.25 A 664
      SQDOTC=0.[illegible]3*GTAB*SQRT(RHOWS*SVISG*DV*G [illegible])*(V**2)/(2.*G*AJ) A 665
55    SDTR=V**2/(2.*G*AJ*CPA)                                           A 666
      STAW=TEMP+SRF*SDTR                                                A 667
      STG=TEMP+SDTR                                                     A 668
      STREC=TEMP+SRF*(STG-TEMP)                                         A 669
      SHE=SQDOTC/(STG-TW(KS,LEN))                                       A 670
56    IF (IND(KS,LEN).EQ.1) GO TO 57                                    A 671
      IF (TW(KS,LEN).GE.TMELT) GO TO 57                                 A 672
      STWK=TW(KS,LEN)                                                   A 673
      CALL TCATJ (SVT,STWK)                                             A 674
      CALL CPATJ (SVC,STWK)                                             A 675
      SARHO(KS)=ATJRHO                                                  A 676
      SATC(KS)=SVT                                                      A 677
      SACP(KS)=SVC                                                      A 678
      IF (KS.EQ.1) GO TO 58                                             A 679
      TW(KS,LEN)=TW(KS,LEN)+DELT*(SATC(KS-1)/(SARHO(KS-1)*SACP(KS-1)*DE( A 680
     1KS-1,LEN)**2)*(TW(KS-1,LEN)-TW(KS,LEN))-SATC(KS)/(SARHO(KS)*SACP(K A 681
```

```
     2S)*DE(KS,LEN)**2)*(TW(KS,LEN)-TW(KS+1,LEN)))                      A 682
      IF (TW(KS,LEN).LE.TMELT) GO TO 65                                 A 683
      TW(KS,LEN)=TMELT-1.                                               A 684
      GO TO 65                                                          A 685
57    STWK=TW(KS,LEN)                                                   A 686
      CALL TCATJ (SCT,STWK)                                             A 687
      CALL CPATJ (SCC,STWK)                                             A 688
      SARHO(KS)=ATJRHO                                                  A 689
      SATC(KS)=SCT                                                      A 690
      SACP(KS)=SCC                                                      A 691
      IND(KS,LEN)=1                                                     A 692
58    TW(KS,LEN)=TW(KS,LEN)+DELT/(SACP(KS)*SARHO(KS)*DE(KS,LEN))*(SHE*(S A 693
     1TG -TW(KS,LEN))-SATC(KS)/DE(KS,LEN)*(TW(KS,LEN)-TW(KS+1,LEN)))*2. A 694
      IF (TW(KS,LEN).GE.TMELT) GO TO 59                                 A 695
      JIND(LEN)=0                                                       A 696
      GO TO 65                                                          A 697
59    TW(KS,LEN)=TMELT                                                  A 698
      HR=CPA*TEMP+RF*V**2/(2.*G*AJ)                                     A 699
      SQCOND=-SATC(KS)*(TW(KS,LEN)-TW(KS+1,LEN))/DE(KS,LEN)             A 700
      SQTOT=SQDOTC+SQCOND                                               A 701
      IF (SQTOT.LE.0.0) GO TO 65                                        A 702
      IND(KS,LEN)=1                                                     A 703
      JIND(LEN)=1                                                       A 704
      DELH=HR-CPA*TMELT                                                 A 705
      QSTARS=2000.+2.*DELH                                              A 706
      CDOTS=SQTOT/(QSTARS*ATJRHO)                                       A 707
      SDOT(LEN)=SDOT(LEN)+CDOTS*DELT                                    A 708
      SS=CDOTS                                                          A 709
      RX=RX+1./(1.-SIN(THETC))*(SIN(THETC)*SS-CDOT)                     A 710
      SX=.01745*RX*PHI                                                  A 711
      IF (SX.LE.0.0) SX=.01943                                          A 712
      IF (RX.LE.0.0) RX=.01387                                          A 713
      SNR=RX                                                            A 714
      DO 60 N=1,NALS                                                    A 715
      BN=N                                                              A 716
      IF (BN*DEL(1,NOFXP)-SDOT(LEN)) 60,60,61                           A 717
60    CONTINUE                                                          A 718
      PRINT 86                                                          A 719
      GO TO 69                                                          A 720
61    DE(N,LEN)=DEL(N,LEN)-(SDOT(LEN)-(BN-1.)*DEL(1,NOFXP))             A 721
      PCM=SACP(N)*SARHO(N)*DE(N,LEN)**2/(DELT*SATC(N))                  A 722
      IF (PCM-2.) 62,63,63                                              A 723
62    DE(N,LEN)=0.                                                      A 724
      SDOT(LEN)=BN*STOL                                                 A 725
      IND(N,LEN)=1                                                      A 726
      IND(N+1,LEN)=1                                                    A 727
63    IF (N.EQ.1) GO TO 65                                              A 728
      NM=N-1                                                            A 729
      DO 64 I=1,NM                                                      A 730
64    DE(I,LEN)=0.                                                      A 731
65    KS=KS+1                                                           A 732
      IF (KS.LE.NALS) GO TO 56                                          A 733
      TW(KS,LEN)=TW(KS,LEN)+DELT*(SATC(KS-1)/(SARHO(KS-1)*SACP(KS-1)*DE( A 734
     1KS-1,LEN)**2)*(TW(KS-1,LEN)-TW(KS,LEN))-SATC(KS)/(SARHO(KS)*SACP(K A 735
     2S)*DE(KS,LEN)**2)*(TW(KS,LEN)-TW(KS+1,LEN)))                      A 736
      IF (TW(KS,LEN).GT.1060.) TW(KS,LEN)=1060.                         A 737
      KS=KS+1                                                           A 738
      TW(KS,LEN)=TW(KS,LEN)+DELT*(SATC(KS-1)/(SARHO(KS-1)*SACP(KS-1)*DE( A 739
     1KS-1,LEN)**2)*(TW(KS-1,LEN)-TW(KS,LEN)))                          A 740
      IF (TW(KS,LEN).GT.860.) TW(KS,LEN)=860.                           A 741
C     ***************************************************************** A 742
      TMELT=6760.                                                       A 743
```

```
C     ***************************************************************** A 744
      TOTWT=0.                                                          A 745
      WDOT=0.0                                                          A 746
      DO 66 LL=1,NOFX                                                   A 747
      TOTWT=TOTWT+PI*(RS(LL)+RL(LL)-SDOT(LL))*SDOT(LL)*RHOV*SOL(LL)     A 748
66    WDOT=WDOT+WT(LL)                                                  A 749
      SWTL=.0698*PHI*SNRI**2*SDOT(NOFXP)*ATJRHO                         A 750
      WT(NOFXP)=2.*PI*SNR**2*CDOTS*ATJRHO                               A 751
      TOTWT=TOTWT+SWTL                                                  A 752
      WDOT=WDOT+WT(NOFXP)                                               A 753
      VMAS=BI-TOTWT/G                                                   A 754
      RAD=RADI-SDOT(NOFXM)                                              A 755
      ALGTH=ALGTHI-SDOT(NOFXP)                                          A 756
      AREA=PI*RAD**2                                                    A 757
      SLANT=ALGTH/(COS(THETC)-SNR/RAD*(1.-SIN(THETC)))                  A 758
      ATL=AT-DELT/6.                                                    A 759
      ATH=AT+DELT/6.                                                    A 760
      IF (ALT.LE.0.0) GO TO 68                                          A 761
      IF (T.GT.ATL.AND.T.LT.ATH) GO TO 67                               A 762
      GO TO 8                                                           A 763
67    IF (LLL.LT.8) GO TO 68                                            A 764
      LLL=0                                                             A 765
      PRINT 80                                                          A 766
68    PRINT 81, T,X,Y,Z,ALT,GAMMA,VMAS,PSI,V,QD,AMACH,CD,ANR,PHI,THE,ALP A 767
     1,BET,PS,ALPT,XE,YE,ZE,FD,FN,GFZ,CLAT,DLON,ABETA,GCIR,AIZ,AIX      A 768
      PRINT 82, CP,CAN,CPB,CDF,ANRE                                     A 769
      PRINT 83, RHO,VIS,AMACHE,TEMPE,RHOE,VE,VISG,PBE                   A 770
      LLL=LLL+1                                                         A 771
      AT=AT+1.0                                                         A 772
      PRINT 87, (SDOT(I),I=1,NOFXP)                                     A 773
      PRINT 70, ((TW(I,J),J=1,NOFX),I=1,NP2)                            A 774
      PRINT 86, TW(NALC1,NOFX),TW(NALC2,NOFX)                           A 775
      PRINT 89, WDOT,TOTWT,RX                                           A 776
      PRINT 90, QSTAR                                                   A 777
      PRINT 91, (TW(I,NOFXP),I=1,NP25)                                  A 778
      IF (ALT) 69,69,8                                                  A 779
69    CONTINUE                                                          A 780
C                                                                       A 781
C                                                                       A 782
70    FORMAT (30X,8F8.0)                                                A 783
71    FORMAT (1H1)                                                      A 784
72    FORMAT (*JIND*10I4)                                               A 785
73    FORMAT (*IND*8I4/(10X,8I4))                                       A 786
74    FORMAT (*VCP*8E12.3/(11X,8E12.3))                                 A 787
75    FORMAT (*VTC*8E12.3/(11X,8E12.3))                                 A 788
76    FORMAT (*VRHO*8E12.3/(11X,8E12.3))                                A 789
77    FORMAT (*DEL*8E12.3/(11X,8E12.3))                                 A 790
78    FORMAT (*DE*8E12.3/(11X,8E12.3))                                  A 791
79    FORMAT (*TW*8E12.3/(11X,8E12.3))                                  A 792
80    FORMAT (12X,4HTIME,14X,1HX,18X,1HY,15X,1HZ,16X,3HALT,13X,5HGAMMA,1 A 793
     11X,4HVMAS/30X,4HPSI,15X,3HVEL,13X,2HQD,15X,5HAMACH,11X,2HCD,14X,3H A 794
     2REN/30X,3HPHI,16X,5HTHETA,11X,5HALPHA,12X,3HBET,13X,2HPS,14X,4HALP A 795
     3T/30X,2HXE,17X,2HYE,14X,2HZE,15X,2HFD,14X,2HFN,14X,3HGFZ/30X,3HLAT A 796
     4,16X,4HLONG,12X,4HBETA,13X,4HGCIR,12X,2HIZ,14X,2HIX)              A 797
81    FORMAT (1H0,4X,7E17.7/(22X,6E17.7))                               A 798
82    FORMAT (10X,5E10.3)                                               A 799
83    FORMAT (5X,8E10.3)                                                A 800
84    FORMAT (10H  OVERHEAT/)                                           A 801
85    FORMAT (*OVERHEATSTAG1*/)                                         A 802
86    FORMAT (*OVERHEATSTAG2*/)                                         A 803
87    FORMAT (10X*SDOT*9E12.3)                                          A 804
88    FORMAT (86X,F8.0)                                                 A 805
```

```
89    FORMAT (10X*WTLOSSRATEIS*E11.4*LBS/SECANDTOTALWTLOSSIS*E13.4*LBSAN  A 806
     1DNOSERADIS*E11.4*FT*)                                               A 807
90    FORMAT (10X*QSTARIS*E11.4*BTU/LB*)                                  A 808
91    FORMAT (30X,13F8.0)                                                 A 809
92    FORMAT(*    SDOT*  10F8.5)                                         A810
      END                                                                A811
```

```
      SUBROUTINE ATTK (VRZ4,VRY4,ALP,PI)
C     COMPUTES ANGLE OF ATTACK,ALP.
      IF (VRZ4) 9,5,1
1     IF (VRY4) 4,3,2
2     ALP=ATAN(VRY4/VRZ4)
      RETURN
3     ALP=0.
      RETURN
4     ALP=ATAN(VRY4/VRZ4)
      RETURN
5     IF (VRY4) 6,7,8
6     ALP=-PI/2.
      RETURN
7     ALP=0.
      RETURN
8     ALP=PI/2.
      RETURN
9     IF (VRY4) 10,11,12
10    ALP=-PI+ATAN(VRY4/VRZ4)
      RETURN
11    ALP=PI
      RETURN
12    ALP=PI+ATAN(VRY4/VRZ4)
      RETURN
      END
```

```
      SUBROUTINE CDSF (CD,AM,ANR)                                       C   1
C     COMPUTES INVISCID DRAG                                            C   2
      COMMON /B/ AREA,RAD,SLANT,SNR,THETC,V                             C   3
      COMMON /C/ CPM,CP,CAN,CPB,CDF                                     C   4
      PI=3.14159                                                        C   5
      G=32.174                                                          C   6
      ANOSE=PI*(SNR**2)                                                 C   7
      WAREA=PI*RAD*SLANT                                                C   8
      AMACH=AM                                                          C   9
      PR=.89                                                            C  10
      CPM=1.42857/(AM**2)*((6.*(AM**2)/5.)**3.5*(6./(7.*(AM**2)-1.))**2. C  11
     15-1.)                                                             C  12
      CP=4.*(SIN(THETC))**2*(2.5+8.*AMACH*SIN(THETC))/(1.+16.*AMACH*SIN( C  13
     1THETC))                                                           C  14
      CAN=(.55-CP)*ANOSE/AREA                                           C  15
      CPB=1.001/AM**2                                                   C  16
      CALL CDFM (CDF)                                                   C  17
      CD=CP+CAN+CPB+CDF                                                 C  18
      RETURN                                                            C  19
      END                                                               C  20-
```

```
      SUBROUTINE LONG (DLG,XE,YE,PI)
C     THIS SUR COMPUTES LONGITUDE                                D    1
      IF (YE) 1,6,4                                              D    2
1     IF (XE) 2,9,3                                              D    3
2     DLG=-PI+ATAN(YE/XE)                                        D    4
      RETURN                                                     D    5
3     DLG=ATAN(YE/XE)                                            D    6
      RETURN                                                     D    7
4     IF (XE) 5,10,3                                             D    8
5     DLG=PI+ATAN(YE/XE)                                         D    9
      RETURN                                                     D   10
6     IF (XE) 7,7,8                                              D   11
7     DLG=PI                                                     D   12
      RETURN                                                     D   13
8     DLG=0.0                                                    D   14
      RETURN                                                     D   15
9     DLG=-PI/2.                                                 D   16
      RETURN                                                     D   17
10    DLG=PI/2.                                                  D   18
      RETURN                                                     D   19
      END                                                        D   20
                                                                 D   21-
```

```
      SUBROUTINE INITIAL (SNR,THETC,SLANT)                                E   1
C                                                                         E   2
C      THIS SUBROUTINE PROVIDES THE NECESSARY GEOMETRY CALCULATIONS AND   E   3
C     CHANGES IN UNITS FOR PROGRAM STRAR6                                 E   4
C                                                                         E   5
      COMMON /D/ TW(50,12),IND(50,12),JIND(12),VCP(50,12),VTC(50,12),VRH  E   6
     10(50,12),DEL(50,12),DE(50,12),SDOT(12),XI(12),RS(12),RL(12),SOL(12  E   7
     2),WT(12),TM(12),TWT(12),SACP(50),SATC(50),SARHO(50),RN(12)          E   8
      COMMON /F/ NOFX,ALGTH,RADI,POS(11),AZN,GLAT                         E   9
      AZN=AZN/57.296                                                      E  10
      GLAT=GLAT/57.296                                                    E  11
      ALGTH=POS(NOFX)/12.                                                 E  12
      IM=NOFX-1                                                           E  13
      STH=SIN(THETC)                                                      E  14
      CTH=COS(THETC)                                                      E  15
      DO 1 I=1,IM                                                         E  16
      RN(I)=6.6E+07                                                       E  17
      SOL(I)=(POS(I+1)-POS(I))/(12.0*CTH)                                 E  18
1     RS(I)=SNR*CTH+(POS(I)/12.0-SNR*(1.0-STH))*STH/CTH                   E  19
      RN(NOFX)=5.0E+06                                                    E  20
      RN(NOFX+1)=1.5E+06                                                  E  21
      RS(NOFX)=SNR                                                        E  22
      RS(NOFX+1)=SNR                                                      E  23
      SOL(NOFX)=(POS(1)/12.0-SNR*(1.0-STH))/CTH                           E  24
      RADI=SNR*CTH+(ALGTH-SNR*(1.0-STH))*STH/CTH                          E  25
      IM=NOFX-2                                                           E  26
      DO 2 I=1,IM                                                         E  27
2     RL(I)=RS(I+1)                                                       E  28
      RL(NOFX-1)=RADI                                                     E  29
      RL(NOFX)=RS(1)                                                      E  30
      SLANT=0.0                                                           E  31
      DO 3 I=1,NOFX                                                       E  32
3     SLANT=SLANT+SOL(I)                                                  E  33
      RETURN                                                              E  34
      END                                                                 E  35
```

```
      SUBROUTINE CDFM (CDF)
C     THIS SUB COMPUTES SKIN FRICTION DRAG                                F   1
      COMMON /B/ AREA,RAD,SLANT,SNR,THETC,V                               F   2
      COMMON /D/ TW(50,12),IND(50,12),JIND(12),VCP(50,12),VTC(50,12),VRH  F   3
     10(50,12),DEL(50,12),DE(50,12),SDOT(12),XI(12),RS(12),RL(12),SOL(12  F   4
     2),WT(12),TM(12),TWT(12),SACP(50),SATC(50),SARHO(50),RN(12)          F   5
      COMMON /E/ NOFXM,NAL,ALT,AMACH,QD,AMACHE,TEMPE,RHOE,VE,VISG,PBE,AN  F   6
     1RE                                                                  F   7
      TWA=0.                                                              F   8
      CDF=0.0                                                             F   9
      SR=SNR/RAD                                                          F  10
      PI=3.14159                                                          F  11
      CALL RHOF (RHO,ALT)                                                 F  12
      CALL VISCO (VIS,ALT)                                                F  13
      CALL VSD (VS,ALT)                                                   F  14
      CALL PRESS (PRE,ALT)                                                F  15
      CALL TEMPA (TEMP,ALT)                                               F  16
      AMACH=V/VS                                                          F  17
      TEMPE=TEMP*(1.+.0966*AMACH*SIN(THETC)+.2267*(AMACH*SIN(THETC))**2)  F  18
      VE=V*(1.-1.4/AMACH**2*(AMACH*SIN(THETC))**1.9)**.5                  F  19
      AMACHE=AMACH*(VE/V)*(TEMP/TEMPE)**.5                                F  20
      R1=1716.                                                            F  21
      AM=AMACH                                                            F  22
      AM=AMACH                                                            F  23
      PBE=PRE*(1.+2.8*AM**2*(SIN(THETC))**2*(2.5+8.*AM*SIN(THETC))/(1.+1  F  24
     16.*AM*SIN(THETC)))                                                  F  25
      RHOE=PBE/(R1*TEMPE)                                                 F  26
      CALL VISCOT (VISG,TEMPE)                                            F  27
      AREA=PI*RAD**2                                                      F  28
      ANRE=RHOE*VE*SLANT*32.174/VISG                                      F  29
      COTT=1./TAN(THETC)                                                  F  30
      DO 2 K=1,NOFXM                                                      F  31
      DO 1 M=1,NAL                                                        F  32
      IF (DE(M,K).LE.0.) GO TO 1                                          F  33
      TWA=TWA+TW(M,K)/8.                                                  F  34
1     CONTINUE                                                            F  35
2     CONTINUE                                                            F  36
      RE=RHO*V*SLANT/VIS                                                  F  37
      IF (ANRE-2.0E+07) 3,4,4                                             F  38
3     HSH=.5+.5*(TWA/TEMPE)+.0374*(AMACHE)**2                             F  39
      CDF1=(1.53/RE**.5)*(VE/V)**1.5*(PBE/PRE)**.5*(TEMP/TEMPE)**.185*(1  F  40
     1./HSH)**.185*COTT                                                   F  41
      CDF=CDF1*((1.+9.8842*SR-44.0235*SR**2+70.383*SR**3)-(SR**(.69+2.1*  F  42
     1SR)*ALOG10(RE)))                                                    F  43
      GO TO 5                                                             F  44
4     HSH=.5+.5*(TWA/TEMPE)+.0388*(AMACHE)**2                             F  45
      CDF1=(.0776/RE**.2)*(VE/V)**1.8*(PBE/PRE)**.8*(TEMP/TEMPE)**.58*(1  F  46
     1./HSH)**.58*COTT                                                    F  47
      CDF=CDF1*(1.-((.8+.052*AMACH)*SR))                                  F  48
5     CDF=CDF                                                             F  49
      RETURN                                                              F  50
      END                                                                 F  51
                                                                          F  52-
```

```
      SUBROUTINE VISCOT (VISG,TEMP)
C     THIS SUB COMPUTES VISCOSITY OF AIR VS TEMP
C     UNITS ARE LB/FT-SEC
      IF (TEMP-2460.) 2,1,1
1     VISG=41.0E-10*TEMP+2.4414E-05
      RETURN
2     IF (TEMP-1160.) 4,3,3
3     VISG=100.769E-10*TEMP+.97108E-05
      RETURN
4     IF (TEMP-760.) 6,5,5
5     VISG=132.5E-10*TEMP+.603E-05
      RETURN
6     VISG=166.666E-10*TEMP+.34334E-05
      RETURN
      END
```

```
      SUBROUTINE PRESS (PE,ALT)
C     COMPUTES PRESSURE PER ALTITUDE                                    H   1
C     LBS/FT2                                                           H   2
      PE=2116.2*EXP(-4.25509E-05*ALT)                                   H   3
      RETURN                                                            H   4
      END                                                               H   5
                                                                        H   6-
```

```
      SUBROUTINE VSD (VS,ALT)
C     THIS SUB COMPUTES SPEED OF SOUND
C     UNITS ARE FT/SEC
      IF (ALT-36000.) 1,1,2
1     VS=1116.9-.412E-02*ALT
      RETURN
2     IF (ALT-82000.) 3,3,4
3     VS=968.5
      RETURN
4     IF (ALT-154000.) 5,5,6
5     VS=814.+.191E-02*ALT
      RETURN
6     IF (ALT-172000.) 7,7,8
7     VS=1106.
      RETURN
8     IF (ALT-262000.) 9,9,10
9     VS=1527.-.245E-02*ALT
      RETURN
10    VS=846.
      RETURN
      END
```

```
      SUBROUTINE GCPB (GCP,PBL)                                         J   1
C     THIS SUB COMPUTES ABLATIVE GAS SPECIFIC HEAT                      J   2
C     UNITS ARE BTU/LB-DEG R                                            J   3
      IF (PBL-10.) 2,1,1                                                J   4
1     GCP=-.228*ALOG(PBL)+3.22                                          J   5
      RETURN                                                            J   6
2     IF (PBL-.009) 4,3,3                                               J   7
3     GCP=-.30882*ALOG(PBL)+3.4                                         J   8
      RETURN                                                            J   9
4     IF (PBL-.0001) 6,5,5                                              J  10
5     GCP=.7374*ALOG(PBL)+8.37                                          J  11
      RETURN                                                            J  12
6     IF (PBL-1.0E-05) 8,7,7                                            J  13
7     GCP=.12333*ALOG(PBL)+2.709                                        J  14
      RETURN                                                            J  15
8     GCP=1.284                                                         J  16
      RETURN                                                            J  17
      END                                                               J  18-
```

```
      SUBROUTINE TEMPA (TEMP,ALT)                                       K   1
C     THIS SUB COMPUTES TEMP OF AIR VS ALT     TO 300,000               K   2
C     TEMP IS IN DEGREES RANKINE                                        K   3
      IF (ALT-261000.) 2,1,1                                            K   4
1     TEMP=298.2                                                        K   5
      RETURN                                                            K   6
2     IF (ALT-175500.) 4,3,3                                            K   7
3     TEMP=-2.463E-03*ALT+941.04                                        K   8
      RETURN                                                            K   9
4     IF (ALT-154000.) 6,5,5                                            K  10
5     TEMP=508.79                                                       K  11
      RETURN                                                            K  12
6     IF (ALT-85000.) 8,7,7                                             K  13
7     TEMP=1.627E-03*ALT+256.05                                         K  14
      RETURN                                                            K  15
8     IF (ALT-35700.) 10,9,9                                            K  16
9     TEMP=389.99                                                       K  17
      RETURN                                                            K  18
10    TEMP=-36.77E-04*ALT+518.7                                         K  19
      RETURN                                                            K  20
      END                                                               K  21-
```

```
      SUBROUTINE TCAT (TCA,TEMP)                                        L   1
C     THIS SUB COMPUTES THERMAL COND. OF AIR VS. TEMP                   L   2
C     UNITS ARE BTU/SEC-FT-DEGREE RANKINE                               L   3
      IF (TEMP-2960.) 2,1,1                                             L   4
1     TCA=6.0E-06*TEMP+.03324                                           L   5
      GO TO 9                                                           L   6
2     IF (TEMP-2460.) 4,3,3                                             L   7
3     TCA=7.8E-06*TEMP+.028                                             L   8
      GO TO 9                                                           L   9
4     IF (TEMP-1960.) 6,5,5                                             L  10
5     TCA=14.2E-06*TEMP+.01217                                          L  11
      GO TO 9                                                           L  12
6     IF (TEMP-1160.) 8,7,7                                             L  13
7     TCA=16.5E-06*TEMP+.00766                                          L  14
      GO TO 9                                                           L  15
8     TCA=19.28E-06*TEMP+.00444                                         L  16
9     TCA=TCA/3600.                                                     L  17
      RETURN                                                            L  18
      END                                                               L  19-
```

```
      SUBROUTINE VCPFC (VCP,TEMP)                                       M   1
C     THIS SUB COMPUTES VIRGIN SPECIFIC HEAT VS. TEMP                   M   2
C     UNITS ARE BTU/LB-DEG R                                            M   3
      IF (TEMP-4000.) 2,1,1                                             M   4
1     VCP=.55E-04*TEMP+1.23                                             M   5
      RETURN                                                            M   6
2     IF (TEMP-2000.) 4,3,3                                             M   7
3     VCP=.19E-03*TEMP+.69                                              M   8
      RETURN                                                            M   9
4     IF (TEMP-1060.) 6,5,5                                             M  10
5     VCP=.556E-03*TEMP-.0423                                           M  11
      RETURN                                                            M  12
6     IF (TEMP-860.) 8,7,7                                              M  13
7     VCP=.975E-03*TEMP-.4865                                           M  14
      RETURN                                                            M  15
8     IF (TEMP-660.) 10,9,9                                             M  16
9     VCP=.21E-03*TEMP+.1714                                            M  17
      RETURN                                                            M  18
10    VCP=.375E-03*TEMP+.0625                                           M  19
      RETURN                                                            M  20
      END                                                               M  21-
```

```
      SUBROUTINE RHOF (RHO,ALT)                                         N   1
C     THIS SUB COMPUTES DENSITY OF AIR VS. ALTITUDE                     N   2
      COMMON /A/ RE                                                     N   3
      GALT=RE*ALT/(RE+ALT)                                              N   4
      RHOO=.0023769                                                     N   5
      R=53.352                                                          N   6
      E=2.7183                                                          N   7
      IF (GALT-36089.) 1,1,2                                            N   8
1     T=518.688-3.56616*GALT/1000.                                      N   9
      RHO=RHOO*(T/518.668)**4.256                                       N  10
      RETURN                                                            N  11
2     IF (GALT-82021.) 3,3,4                                            N  12
3     EP2=(36089.-GALT)/(R*389.988)                                     N  13
      RHO=RHOO*.297069*E**EP2                                           N  14
      RETURN                                                            N  15
4     IF (GALT-154199.) 5,5,6                                           N  16
5     T=254.988+1.64592*GALT/1000.                                      N  17
      RHO=RHOO*.0326657*(T/389.988)**-12.388                            N  18
      RETURN                                                            N  19
6     IF (GALT-173885.) 7,7,8                                           N  20
7     EP4=(154199.-GALT)/(R*508.788)                                    N  21
      RHO=RHOO*.00121179*E**EP4                                         N  22
      RETURN                                                            N  23
8     IF (GALT-259186.) 9,9,10                                          N  24
9     T=938.088-2.46888*GALT/1000.                                      N  25
      RHO=RHOO*5.86784E-04*(T/508.788)**6.592                           N  26
      RETURN                                                            N  27
10    IF (GALT-295276.) 11,11,12                                        N  28
11    EP6=(259186.-GALT)/(R*298.186)                                    N  29
      RHO=RHOO*1.73274E-05*E**EP6                                       N  30
      RETURN                                                            N  31
12    T=-349.912+2.19456*GALT/1000.                                     N  32
      RHO=RHOO*1.79263E-06*(T/298.188)**-9.541                          N  33
      RETURN                                                            N  34
      END                                                               N  35-
```

```
      SUBROUTINE VISCO (VIS,ALT)
C     THIS SUB COMPUTES VISCOSITY OF AIR VS. ALTITUDE
C     UNITS ARE IN LB-SEC/FT**2
      IF (ALT-270000.) 2,1,1
1     VIS=2.35E-07
      RETURN
2     IF (ALT-175500.) 4,3,3
3     VIS=-1.509E-12*ALT+6.333E-07
      RETURN
4     IF (ALT-156000.) 6,5,5
5     VIS=3.68E-07
      RETURN
6     IF (ALT-83250.) 8,7,7
7     VIS=.973E-12*ALT+2.172E-07
      RETURN
8     IF (ALT-34500.) 10,9,9
9     VIS=2.969E-07
      RETURN
10    VIS=-2.124E-12*ALT+3.737E-07
      RETURN
      END
```

```
      SUBROUTINE CCPP (CCP,TEMP)                                        P   1
C     THIS SUB COMPUTES CHAR SPECIFIC HEAT VS. TEMP                     P   2
C     UNITS ARE BTU/LB-DEG R                                            P   3
      IF (TEMP-6000.) 2,1,1                                             P   4
1     CCP=.4                                                            P   5
      RETURN                                                            P   6
2     IF (TEMP-4000.) 4,3,3                                             P   7
3     CCP=.125E-04*TEMP+.3215                                           P   8
      RETURN                                                            P   9
4     IF (TEMP-3000.) 6,5,5                                             P  10
5     CCP=.305E-04*TEMP+.2495                                           P  11
      RETURN                                                            P  12
6     IF (TEMP-2000.) 8,7,7                                             P  13
7     CCP=.47E-04*TEMP+.14                                              P  14
      RETURN                                                            P  15
8     IF (TEMP-1060.) 10,9,9                                            P  16
9     CCP=.207E-03*TEMP-.14                                             P  17
      RETURN                                                            P  18
10    CCP=.96E-04*TEMP-.02236                                           P  19
      RETURN                                                            P  20
      END                                                               P  21-
```

```
      SUBROUTINE SSLP (VRZ4,VRX4,BET,PI)
C     COMPUTES ANGLE OF SIDESLIP
      IF (VRZ4) 9,5,1
1     IF (VRX4) 4,3,2
2     BET=ATAN(VRX4/VRZ4)
      RETURN
3     BET=0.
      RETURN
4     BET=ATAN(VRX4/VRZ4)
      RETURN
5     IF (VRX4) 6,7,8
6     BET=-PI/2.
      RETURN
7     BET=0.
      RETURN
8     BET=PI/2.
      RETURN
9     IF (VRX4) 10,11,12
10    BET=-PI+ATAN(VRX4/VRZ4)
      RETURN
11    BET=PI
      RETURN
12    BET=PI+ATAN(VRX4/VRZ4)
      RETURN
      END
```

```
      SUBROUTINE VTCPC (VTC,TEMP)
C     UNITS ARE BTU/FT-SEC-DEG R
      IF (TEMP-4000.) 2,1,1
1     VTC=.705E-07*TEMP+.58E-04
      RETURN
2     IF (TEMP-2000.) 4,3,3
3     VTC=.695E-07*TEMP+.62E-04
      RETURN
4     VTC=.7376E-07*TEMP+.5347E-04
      RETURN
      END
```

```
      SUBROUTINE ACMQ (C,A)                                             S   1
C     COMPUTES DAMPING COEFFICIENT                                      S   2
      IF (A.GT.17.) GO TO 1                                             S   3
      IF (A.GT.9.) GO TO 2                                              S   4
      IF (A.GT.7.) GO TO 3                                              S   5
      IF (A.GT.5.) GO TO 4                                              S   6
      IF (A.GT.4.) GO TO 5                                              S   7
      IF (A.GT.3.) GO TO 6                                              S   8
      C=2.5*A-10.                                                       S   9
      RETURN                                                            S  10
1     C=-2.4                                                            S  11
      RETURN                                                            S  12
2     C=.05*A-3.25                                                      S  13
      RETURN                                                            S  14
3     C=.1*A-3.7                                                        S  15
      RETURN                                                            S  16
4     C=.3*A-5.3                                                        S  17
      RETURN                                                            S  18
5     C=.7*A-7.3                                                        S  19
      RETURN                                                            S  20
6     C=A-8.5                                                           S  21
      RETURN                                                            S  22
      END                                                               S  23-
```

```
      SUBROUTINE GASTC (GTC,GCP)                                        T   1
C     COMPUTES ABLATIVE GAS THERMAL                                     T   2
C     CONDUCTIVITY.  BTU/SEC-FT-DEG.R.                                  T   3
      GTC=4.429E-05*(GCP+.297)                                          T   4
      RETURN                                                            T   5
      END                                                               T   6
```

```
      SUBROUTINE ACNA (C,A)                                             U   1
C     COMPUTES NORMAL FORCE COEFF.                                      U   2
C     CNA PER DEGREE                                                    U   3
      C=.034                                                            U   4
      RETURN                                                            U   5
      END                                                               U   6-
```

```
      SUBROUTINE CTCPC (CTC,TEMP)
C     THIS SUB COMPUTES CHAR THERMAL CONDUCTIVITY VS. TEMP
C     UNITS ARE BTU/FT-SEC-DEG R
      IF (TEMP-6000.) 1,2,2
      CTC=.56E-07*TEMP+.053E-03
      RETURN
2     CTC=.389E-03
      RETURN
      END
```

```
      SUBROUTINE CPATJ (S,T)                                            W   1
C     COMPUTES SPEC HEAT OF ATJ GRAPHITE VS. TEMP                       W   2
C     UNITS   BTU/LB-DEG-R                                              W   3
      IF (T-2000.) 1,2,2                                                W   4
1     IF (T-1000.) 4,3,3                                                W   5
2     S=3.482E-05*T+.35536                                              W   6
      RETURN                                                            W   7
3     S=1.25E-04*T+.175                                                 W   8
      RETURN                                                            W   9
4     S=3.409E-04*T-.0409                                               W  10
      RETURN                                                            W  11
      END                                                               W  12-
```

```
      SUBROUTINE TCATJ (C,T)                                            X   1
C     COMPUTES THER. COND. OF ATJ GRAPHITE VS. TEMP                     X   2
      IF (T-3460.) 1,3,3                                                X   3
1     IF (T-2460.) 2,4,4                                                X   4
2     IF (T-1460.) 6,5,5                                                X   5
3     C=(2.E-05*T+.2808)/60.                                            X   6
      RETURN                                                            X   7
4     C=.35/60.                                                         X   8
      RETURN                                                            X   9
5     C=(-1.84E-04*T+.80264)/60.                                        X  10
      RETURN                                                            X  11
6     C=(-3.82E-04*T+1.091)/60.                                         X  12
      RETURN                                                            X  13
      END                                                               X  14-
```

APPENDIX II

STRAB-6 PROGRAM LISTING FOR MULTIPLE CASE RUN

```
WJM62,6,2500,65000.MOULDS,627A,WODE.
RUNJ(S,40000,,,,,77000)
RFL(40000)
STRAB62.

      PROGRAM STRAB62 (INPUT,OUTPUT)
C     6 DEGREE TRAJECTORY WITH ABLATION HEATING AND STAG                A   2
      COMMON /A/ RE                                                     A   3
      COMMON /B/ AREA,RAD,SLANT,SNR,THETC,V                             A   4
      COMMON /C/ CPM,CP,CAN,CPB,CDF                                     A   5
      COMMON /D/ TW(50,12),IND(50,12),JIND(12),VCP(50,12)VTC(50,12),VRH A   6
     10(50,12),DEL(50,12),DE(50,12)SDOT(12),XI(12),RS(12),RL(12),SOL(12 A   7
     2),WT(12),TM(12),TWT(12),SACP(50),SATC(50),SARHO(50),RN(12),QSTR(12 A   8
     3),QDOTC(12),QTOT(12),QCOND(12)                                    A   9
      COMMON /E/ NOFXM,NAL,ALT,AMACH,QD,AMACHE,TEMPE,RHOE,VE,VISG,PBE,AN A  10
     1RE                                                                A  11
      COMMON /F/ NOFX,ALGTH,RADI,POS(11),AZN,GLAT                       A  12
C     VEHICLE DATA                                                      A  13
C     IF NOFX IS CHANGED CHANGE FORMAT 103                              A  14
C     IF CONE ANGLE IS CHANGED SUB CDSF MUST BE CHANGED                 A  15
700   1500 READ 1500,NCASE,(POS(J),J=1,8)
      FORMAT(I2,7A10,A8)
      PRINT 1501,NCASE,(POS(J),J=1,8)
      1501 FORMAT(1H1,30X,7A10,A8)
      ETC.
```

```
      DATA SNR,THETC,BI,SM/.0208,.07853,6.27836,.59718/*                A   15
      DATA PI,E,AJ,GRAV,G/3.14159,2.7183,778.,32.174,32.174/            A   17
      DATA REQ,PE,ET,WE/20.927491E+06,.673852E-02,.08181333,0.7292E-04/ A   18
      DATA NOFX,NAL,NALC,NALS/8,4,10,35/*                               A   19
      DATA DELT,DT,H,BT,AT/.05,.0005,.001,.05,1./                       A   20
      DATA AZN,GLAT,DLON,GAMMA/154.,33.996,-107.5,-22.39/*              A   21
      DATA V,Z,ALPHA/15167.,2.50E+05,7./*                               A   22
      DATA (POS(I),I=1,8)/6.607,18.570,30.533,42.496,54.459,66.422,78.38* A   23
      AREA=PI*RAD**2                                                    A  757
      SLANT=ALGTH/(COS(THETC)-SNR/RAD*(1.-SIN(THETC)))                  A  758
      ATL=AT-DELT/6.                                                    A  759
      ATH=AT+DELT/6.                                                    A  760
      IF (ALT.LE.0.0) GO TO 68                                          A  761
      IF (T.GT.ATL.AND.T.LT.ATH) GO TO 67                               A  762
      GO TO 8                                                           A  763
67    IF (LLL.LT.8) GO TO 68                                            A  764
      LLL=0                                                             A  765
      PRINT 80                                                          A  766
68    PRINT 81, T,X,Y,Z,ALT,GAMMA,VMAS,PSI,V,QD,AMACH,CD,ANR,PHI,THE,ALP A  767
     1,BET,PS,ALPT,XE,YE,ZE,FD,FN,GFZ,GLAT,DLON,ABETA,GCIR,AIZ,AIX      A  768
      PRINT 82, CP,CAN,CPB,CDF,ANRE                                     A  769
      PRINT 83, RHO,VIS,AMACHE,TEMPE,RHOE,VE,VISG,PBE                   A  770
      LLL=LLL+1                                                         A  771
      AT=AT+1.0                                                         A  772
```

*These data cards can be removed and read into program by multi-case read statements.

```
      PRINT 87, (SDOT(I),I=1,NOFXP)                          A  773
      PRINT 70, ((TW(I,J),J=1,NOFX),I=1,NP2)                 A  774
      PRINT 88, TW(NALC1,NOFX),TW(NALC2,NOFX)                A  775
      PRINT 89, WDOT,TOTWT,RX                                A  776
      PRINT 90, QSTAR                                        A  777
      PRINT 91, (TW(I,NOFXP),I=1,NP2S)                       A  778
      IF (ALT) 69,69,8                                       A  779
69    IF (NCASE.NE.0) GO TO 700                              A  780
C                                                            A  781
C                                                            A  782
70    FORMAT (30X,8F8.0)                                     A  783
71    FORMAT (1H1)                                           A  784
```

APPENDIX III

SAMPLE CASE OUTPUT

```
TIME                X                   Y                   Z                   ALT                 GAMMA               VMAS
                    PSI                 VEL                 QD                  AMACH               CD                  REN
                    PHI                 THETA               ALPHA               BET                 PS                  ALPT
                    XF                  YE                  ZE                  FD                  FN                  GFZ
                    LAT                 LONG                BETA                GCIR                IZ                  IX

0.                  0.                  0.                  2.5000000E+05       2.5000000E+05       -2.2390000E+01      6.2783600E+00
                    0.                  1.5167000E+04       8.9088100E+00       1.6585019E+01       1.3942240E-01       3.3674106E+04
                    1.8394009E+00       0.                  0.                  0.                  0.                  7.00[illegible]00E+00
                    0.                  0.                  0.                  0.                  0.                  0.
                    3.3817746E+01       -1.0750000E+02      0.                  0.                  5.1000000E-01       2.3080000E+01

1.0000000E+00       2.3702650E-01       1.4023633E+04       2.4420767E+05       2.4421349E+05       -2.2495287E+01      6.2783600E+00
                    1.9322043E-03       1.5178582E+04       1.1740936E+01       1.6344308E+01       1.5221524E-01       4.3663176E+04
                    1.0717959E+02       -7.9831134E-02      5.3157835E+00       8.1503590E-02       6.2831627E+00       5.3157835E+00
                    1.7578217E+07       6.1474736E+03       1.1761207E+07       1.9297126E+00       2.2912934E+00       -3.0491921E-01
                    3.3785656E+01       -1.0747996E+02      1.2290268E+03       1.5223763E+04       5.1000000E-01       2.3080000E+01
  1.460E-02 6.739E-04 3.747E-03 1.034E-01 8.481E+04
1.019E-07 2.648E-07 1.330E+01 5.081E+02 2.777E-07 1.511E+04 3.835E-05 2.422E-01
  SOOT  0.          0.          0.          0.          0.          0.          0.          0.          0.
                    610         593         584         579         575         573         571         593
                    546         545         545         545         545         545         545         585
                    544         544         544         544         544         544         544         578
                    544         544         544         544         544         544         544         572
                    544         544         544         544         544         544         544         567
                    544         544         544         544         544         544         544         563
                                                                                                        554
                                                                                                        545
  WTLOSSRATEIS 0.       LBS/SECANDTOTALWTLOSSIS   0.        LBSANDNOSERADIS 2.0800E-02FT
  QSTARIS 0.        BTU/LB
                    710         676         649         629         612         599         588         579         572         567         562         559         556
                    553         551         550         548         547         547         546         546         545         545         545         545         544
                    544         544         544         544         544         544         544         544         544         544         544

2.0000000E+00       9.3834264E-01       2.8047303E+04       2.3838509E+05       2.3840486E+05       -2.2601020E+01      6.2783600E+00
                    3.7681252E-03       1.5190215E+04       1.5321872E+01       1.6109963E+01       1.1221135E-01       5.5112214E+04
                    1.1207642E+02       -5.5755317E-01      5.2495952E-01       5.6078651E-01       1.2565903E+01       5.2495952E-01
                    1.7580437E+07       1.2294546E+04       1.1747501E+07       1.8564377E+00       2.9528972E-01       -3.8503174E-01
                    3.3751438E+01       -1.0745993E+02      1.6671809E+03       3.1459681E+04       5.1000000E-01       2.3080000E+01
  1.467E-02 6.739E-04 3.857E-03 9.080E-02 1.007E+05
1.328E-07 2.735E-07 1.317E+01 5.252E+02 3.375E-07 1.513E+04 3.845E-05 3.041E-01
  SOOT  0.          0.          0.          0.          0.          0.          0.          0.          0.
                    673         639         622         612         605         600         597         617
                    550         549         548         547         547         547         547         608
                    544         544         544         544         544         544         544         600
                    544         544         544         544         544         544         544         593
                    544         544         544         544         544         544         544         587
                    544         544         544         544         544         544         544         582
                                                                                                        539
                                                                                                        548
  WTLOSSRATEIS 0.       LBS/SECANDTOTALWTLOSSIS   0.        LBSANDNOSERADIS 2.0800E-02FT
  QSTARIS 0.        BTU/LB
                    779         739         707         680         659         641         626         613         603         594         586         580         574
                    569         565         562         559         557         555         553         551         550         549         548         547         547
                    546         546         546         545         545         545         545         545         545         544         544

3.0000000E+00       2.0568970E+00       4.2070977E+04       2.3253199E+05       2.3257503E+05       -2.2708314E+01      6.2783600E+00
```

```
                    5.3070469E-03    1.5201846E+04    1.9812465E+01    1.5881724E+01    1.1877684E-01    6.8991430E+04
                    1.1711304E+02   -1.2579004E+00   -4.4033889E-00    1.2709571E+00    1.8847709E+01    4.4033889E+00
                    1.7582632E+07    1.8441201E+04    1.1733778E+07    2.5409846E+00   -3.2028473E+00   -4.6832509E-01
                    3.3717197E+01   -1.0743991E+02    1.5750261E+03    4.7708987E+04    5.1000000E-01    2.3080000E+01
     1.466E-02 6.739E-04 3.969E-03 8.011E-02 1.200E+05
1.715E-07 2.823E-07 1.303E+01 5.421E+02 4.110E-07 1.514E+04 3.855E-05 3.824E-01
    SOOT   0.          0.          0.          0.          0.          0.          0.          0.          0.
                         733     682     659     644     634     627     623     639
                         557     554     552     551     551     550     550     629
                         545     545     544     544     544     544     544     620
                         544     544     544     544     544     544     544     612
                         544     544     544     544     544     544     544     605
                         544     544     544     544     544     544     544     600
                                                                                 585
                                                                                 554
    WTLOSSRATEIS 0.        LBS/SECANDTOTALWTLOSSIS    0.        LBSANDNOSERADIS 2.0800E-02FT
    QSTARIS 0.        BTU/LB
                         839     792     754     724     698     677     658     643     630     618     609     600     593
                         586     581     576     572     568     565     562     559     557     555     554     552     551
                         550     549     548     548     547     547     547     546     546     546     544

   4.0000000E+00    3.5091109E+00    5.6094057E+04    2.2664794E+05    2.2672359E+05   -2.2817118E+01    6.2783600E+00
                    6.5437958E-03    1.5213384E+04    2.5401848E+01    1.5659246E+01    1.0988487E-01    8.5707484E+04
                    1.1761076E+02   -1.0329000E+00   -4.7921722E+00    1.0989069E+00    2.5130669E+01    4.7921722E+00
                    1.7584801E+07    2.4587384E+04    1.1720038E+07    3.0139424E+00   -4.4689798E+00   -4.7838137E-01
                    3.3682934E+01   -1.0741989E+02    1.7024785E+03    6.3971352E+04    5.1000000E-01    2.3080000E+01
     1.469E-02 6.738E-04 4.082E-03 7.097E-02 1.434E+05
2.195E-07 2.912E-07 1.290E+01 5.589E+02 5.019E-07 1.515E+04 3.865E-05 4.814E-01
    SOOT   0.          0.          0.          0.          0.          0.          0.          0.          0.
                         792     726     695     676     663     654     648     662
                         567     561     558     556     555     554     554     650
                         546     545     545     545     545     545     545     640
                         544     544     544     544     544     544     544     631
                         544     544     544     544     544     544     544     624
                         544     544     544     544     544     544     544     618
                                                                                 601
                                                                                 563
    WTLOSSRATEIS 0.        LBS/SECANDTOTALWTLOSSIS    0.        LBSANDNOSERADIS 2.0800E-02FT
    QSTARIS 0.        BTU/LB
                         897     842     799     763     734     709     688     670     655     642     630     620     611
                         603     596     590     584     580     575     572     568     565     563     560     558     557
                         555     554     553     552     551     550     550     549     549     549     545

   5.0000000E+00    5.2969119E+00    7.0116701E+04    2.2073285E+05    2.2085044E+05   -2.2924859E+01    6.2783600E+00
                    8.2545272E-03    1.5224966E+04    3.2311199E+01    1.5442451E+01    8.4145357E-02    1.0571933E+05
                    1.1243779E+02    6.9587008E-01    4.6595769E-01   -6.8909516E-01    3.1414152E+01    4.6595769E-01
                    1.7586945E+07    3.0733030E+04    1.1706281E+07    2.9357225E+00    5.5272644E-01   -3.9653444E-01
                    3.3648650E+01   -1.0739988E+02    2.2232554E+03    8.9246683E+04    5.1000000E-01    2.3080000E+01
     1.472E-02 6.738E-04 4.197E-03 6.311E-02 1.719E+05
2.788E-07 3.000E-07 1.277E+01 5.757E+02 6.143E-07 1.516E+04 3.875E-05 6.068E-01
    SOOT   0.          0.          0.          0.          0.          0.          0.          0.          0.
                         851     770     732     709     693     681     674     685
                         578     569     565     562     560     559     558     671
                         547     546     546     546     545     545     545     660
                         544     544     544     544     544     544     544     650
                         544     544     544     544     544     544     544     642
                         544     544     544     544     544     544     544     635
                                                                                 616
                                                                                 572
    WTLOSSRATEIS 0.        LBS/SECANDTOTALWTLOSSIS    0.        LBSANDNOSERADIS 2.0800E-02FT
```

```
QSTARIS 0.        BTU/LB
                     954     892     842     802     768     741     717     696     679     664     650     638     628
                     619     611     604     597     591     586     582     578     574     571     568     565     563
                     561     559     558     556     555     554     554     553     553     552     546

6.0000000E+00    7.6750045E+00    8.4139046E+04    2.1478733E+05    2.1495622E+05   -2.3028772E+01    6.2783600E+00
                 1.1403960E-02    1.5236483E+04    4.0795372E+01    1.5231041E+01    9.0991106E-02    1.2953782E+05
                 1.0859402E+02    1.9306128E+00    4.4308445E+00   -1.9350537E+00    3.7695739E+01    4.4308445E+00
                 1.7589063E+07    3.6878014E+04    1.1692506E+07    5.0081282E+00    6.6360261E+00   -3.3870110E-01
                 3.3614343E+01   -1.0737987E+02    2.0559880E+03    9.6535456E+04    5.1000000E-01    2.3080000E+01
  1.476E-02 6.737E-04 4.315E-03 5.633E-02 2.066E+05
3.515E-07 3.089E-07 1.264E+01 5.923E+02 7.535E-07 1.517E+04 3.885E-05 7.658E-01
  SOOT   0.        0.        0.        0.        0.        0.        0.        0.        0.        0.
                     908     814     770     742     723     709     701     708
                     591     579     573     569     567     565     564     693
                     549     547     547     546     546     546     546     681
                     544     544     544     544     544     544     544     670
                     544     544     544     544     544     544     544     661
                     544     544     544     544     544     544     544     653
                                                                             632
                                                                             583
  WTLOSSRATEIS 0.        LBS/SECANDTOTALWTLOSSIS   0.        LBSANDNOSERADIS 2.0800E-02FT
  QSTARIS 0.        BTU/LB
                    1014     942     885     840     802     771     744     722     702     685     670     657     645
                     635     625     617     610     603     597     592     587     583     579     576     573     570
                     568     565     564     562     561     559     558     558     557     557     548

7.0000000E+00    1.0867732E+01    9.8161217E+04    2.0881210E+05    2.0904164E+05   -2.3132183E+01    6.2783600E+00
                 1.4311788E-02    1.5247948E+04    5.1148558E+01    1.5024860E+01    7.1107866E-02    1.5773328E+05
                 1.1285241E+02   -3.5497908E-01    2.8073864E-01    3.6746377E-01    4.3979883E+01    2.8073864E-01
                 1.7591156E+07    4.3022190E+04    1.1678716E+07    3.9271980E+00    5.2716463E-01   -4.0779878E-01
                 3.3580013E+01   -1.0735987E+02    2.6308850E+03    1.1283800E+05    5.1000000E-01    2.3080000E+01
  1.479E-02 6.737E-04 4.434E-03 3.044E-02 2.490E+05
4.400E-07 3.179E-07 1.252E+01 6.089E+02 9.262E-07 1.518E+04 3.896E-05 9.678E-01
  SOOT   0.        0.        0.        0.        0.        0.        0.        0.        0.        0.
                     960     860     808     776     754     738     728     732
                     603     590     582     577     574     572     570     716
                     551     549     548     548     547     547     547     702
                     545     544     544     544     544     544     544     690
                     544     544     544     544     544     544     544     680
                     544     544     544     544     544     544     544     672
                                                                             648
                                                                             595
  WTLOSSRATEIS 0.        LBS/SECANDTOTALWTLOSSIS   0.        LBSANDNOSERADIS 2.0800E-02FT
  QSTARIS 0.        BTU/LB
                    1082     999     932     879     837     802     772     747     725     706     689     675     662
                     650     640     631     622     615     608     602     597     592     588     584     580     577
                     574     572     570     568     566     565     564     563     562     562     550
   TIME              X                Y                Z                ALT              GAMMA            VMAS
                     PSI.             VEL              QD               AMACH            CD               REN
                     PHI              THETA            ALPHA            BET              PS               ALPT
                     XF               YE               ZE               FD               FN               GFZ
                     LAT              LONG             BETA             GCIR             IZ               IX

8.0000000E+00    1.4381999E+01    1.1218285E+05    2.0230641E+05    2.0310596E+05   -2.3241265E+01    6.2783600E+00
                 1.3913329E-02    1.5259356E+04    6.2711759E+01    1.4823682E+01    7.5689961E-02    1.9094836E+05
                 1.1691851E+02   -2.1344005E+00   -3.6709559E+00    2.1622500E+00    5.0261390E+01    3.6709599E+00
                 1.7593225E+07    4.9165840E+04    1.1664908E+07    5.2070247E+00   -8.5863763E+00   -4.7849860E-01
                 3.3545661E+01   -1.0733988E+02    2.4716173E+03    1.2915369E+05    5.1000000E-01    2.3080000E+01
```

```
    1.482E-02 6.737E-04 4.555E-03 4.531E-02 3.008E+05
5.472E-07 3.240E-07 1.239E+01 6.254E+02 1.141E-06 1.519E+04 3.906E-05 1.224E+00
    SDOT   0.          0.          0.          0.          0.          0.          0.          0.          0.          0.
                    1011     906     849     812     787     768     757     758
                     615     601     592     586     582     579     577     740
                     553     551     550     549     549     548     548     724
                     545     545     545     545     544     544     544     711
                     544     544     544     544     544     544     544     700
                     544     544     544     544     544     544     544     690
                                                                             665
                                                                             608

    WTLOSSRATEIS 0.        LBS/SECANDTOTALWTLOSSIS   0.        LBSANDNOSERADIS 2.0800E-02FT
    OSTARIS 0.        BTU/LB
                    1159    1061     984     923     874     834     801     772     748     727     709     692     673
                     666     654     644     635     627     619     613     607     602     597     592     588     585
                     582     579     577     574     573     571     570     569     568     567     553

9.0000000E+00    1.7789750E+01    1.2620338E+05    1.9676939E+05    1.9714832E+05   -2.3349328E+01    6.2783600E+00
                 1.4989356E-02    1.5270724E+04    7.8877520E+01    1.4627318E+01    6.4943661E-02    2.2990097E+05
                 1.1172372E+02    1.5733595E+00    1.6204045E+00   -1.5537048E+00    5.6544901E+01    1.6204045E+00
                 1.7595266E+07    5.5309104E+04    1.1651083E+07    3.5312306E+00    4.6923173E+00   -3.9751216E-01
                 3.3511288E+01   -1.0731990E+02    2.8805986E+03    1.4548170E+05    5.1000000E-01    2.3080000E+01
    1.485E-02 6.736E-04 4.678E-03 4.082E-02 3.643E+05
6.765E-07 3.358E-07 1.227E+01 6.419E+02 1.408E-06 1.521E+04 3.917E-05 1.551E+00
    SDOT   0.          0.          0.          0.          0.          0.          0.          0.          0.          0.
                    1061     949     890     850     822     800     788     785
                     628     613     603     596     591     587     585     764
                     556     554     552     551     550     550     550     747
                     545     545     545     545     545     545     545     732
                     544     544     544     544     544     544     544     720
                     544     544     544     544     544     544     544     710
                                                                             681
                                                                             622

    WTLOSSRATEIS 0.        LBS/SECANDTOTALWTLOSSIS   0.        LBSANDNOSERADIS 2.0800E-02FT
    OSTARIS 0.        BTU/LB
                    1244    1130    1041     970     914     868     830     799     772     749     728     711     695
                     681     669     658     648     639     631     623     617     611     606     601     597     593
                     589     586     584     581     579     577     576     575     574     573     557

1.0000000E+01    2.2179234E+01    1.4022331E+05    1.9070245E+05    1.9117014E+05   -2.3450480E+01    6.2783600E+00
                 2.0681793E-02    1.5281929E+04    9.7086730E+01    1.4435528E+01    6.0280826E-02    2.7536953E+05
                 1.1211026E+02    6.5057488E-01    1.3379386E+00   -6.3675739E-01    6.2827999E+01    1.3379386E+00
                 1.7597283E+07    6.1451221E+04    1.1637242E+07    6.3193270E+00    4.7687739E+00   -4.0767238E-01
                 3.3476892E+01   -1.0729992E+02    3.1034183E+03    1.6182328E+05    5.1000000E-01    2.3080000E+01
    1.488E-02 6.736E-04 4.803E-03 3.688E-02 4.424E+05
8.314E-07 3.448E-07 1.215E+01 6.583E+02 1.742E-06 1.522E+04 3.928E-05 1.967E+00
    SDOT   0.          0.          0.          0.          0.          0.          0.          0.          0.          0.
                    1111     993     931     889     858     834     821     813
                     640     624     614     607     601     597     594     790
                     559     556     554     553     552     552     551     771
                     546     546     545     545     545     545     545     755
                     544     544     544     544     544     544     544     741
                     544     544     544     544     544     544     544     730
                                                                             699
                                                                             636

    WTLOSSRATEIS 0.        LBS/SECANDTOTALWTLOSSIS   0.        LBSANDNOSERADIS 2.0800E-02FT
    OSTARIS 0.        BTU/LB
                    1341    1204    1102    1022     957     905     862     827     797     771     749     729     712
                     697     683     671     661     651     642     634     627     621     615     610     605     601
                     597     594     591     588     586     584     582     581     580     579     561
```

```
1.1000000E+01    2.7141567E+01    1.5424243E+05    1.8460552E+05    1.8517134E+05   -2.3559782E+01    6.2783600E+00
                 1.8471117E-02    1.5293069E+04    1.1884707E+02    1.4248242E+01    5.9491363E-02    3.2822690E+05
                 1.1607068E+02   -2.1130559E+00   -2.5018530E+00    2.1425745E+00    6.9110021E+01    2.5018530E+00
                 1.7599275E+07    6.7592472E+04    1.1623385E+07    7.6343865E+00   -1.0515935E+01   -4.7727204E-01
                 3.3442475E+01   -1.0727995E+02    3.1446013E+03    1.7817803E+05    5.1000000E-01    2.3080000E+01
   1.492E-02 6.735E-04 4.931E-03 3.341E-02 5.383E+05
1.016E-06 3.539E-07 1.203E+01 6.747E+02 2.158E-06 1.523E+04 3.940E-05 2.498E+00
   SOOT   0.          0.          0.          0.          0.          0.          0.          0.          0.
                 1164    1036     971     928     898     870     855     843
                  653     635     625     618     612     607     604     818
                  563     559     557     556     555     554     553     796
                  547     546     546     546     545     545     545     778
                  544     544     544     544     544     544     544     763
                  544     544     544     544     544     544     544     750
                                                                          716
                                                                          651
   WTLOSSRATEIS 0.        LBS/SECANDTOTALWTLOSSIS   0.        LBSANDNOSERADIS 2.0800E-02FT
   QSTARIS 0.        BTU/LB
                 1449    1285    1167    1076    1003     944     895     856     822     794     770     748     730
                  713     698     685     674     663     654     645     638     631     624     619     614     609
                  605     601     598     595     593     591     589     588     587     586     566

1.2000000E+01    3.1786459E+01    1.6826004E+05    1.7847741E+05    1.7915075E+05   -2.3664901E+01    6.2783600E+00
                 2.2284869E-02    1.5304098E+04    1.4473834E+02    1.4065223E+01    5.5970818E-02    3.8944601E+05
                 1.1127757E+02    2.5862578E+00    2.3753990E+00   -2.5791627E+00    7.5392619E+01    2.3753990E+00
                 1.7601239E+07    7.3733342E+04    1.1609511E+07    8.7486103E+00    1.2622077E+01   -4.0619489E-01
                 3.3408038E+01   -1.0725998E+02    3.3419180E+03    1.9454468E+05    5.1000000E-01    2.3080000E+01
   1.495E-02 6.735E-04 5.060E-03 3.034E-02 6.566E+05
1.236E-06 3.630E-07 1.191E+01 6.910E+02 2.679E-06 1.524E+04 3.952E-05 3.177E+00
   SOOT   0.          0.          0.          0.          0.          0.          0.          0.          0.
                 1220    1081    1012     967     933     906     891     876
                  667     647     636     628     622     617     614     846
                  567     563     560     559     557     556     556     822
                  547     547     546     546     546     546     546     802
                  544     544     544     544     544     544     544     785
                  544     544     544     544     544     544     544     772
                                                                          734
                                                                          666
   WTLOSSRATEIS 0.        LBS/SECANDTOTALWTLOSSIS   0.        LBSANDNOSERADIS 2.0800E-02FT
   QSTARIS 0.        BTU/LB
                 1567    1375    1237    1134    1052     985     931     886     849     818     791     768     748
                  730     714     700     687     676     665     656     648     641     634     628     622     618
                  613     609     606     603     600     598     596     595     593     593     570

1.3000000E+01    3.7894799E+01    1.8227671E+05    1.7231992E+05    1.7311017E+05   -2.3769558E+01    6.2783600E+00
                 2.3873710E-02    1.5314961E+04    1.7734569E+02    1.3886334E+01    5.1984653E-02    4.7031510E+05
                 1.1577706E+02   -2.5629488E+00   -1.9942149E+00    2.5965809E+00    8.1675520E+01    1.9942149E+00
                 1.7603180E+07    7.9872485E+04    1.1595622E+07    9.9546854E+00   -1.2983843E+01   -4.8414961E-01
                 3.3373578E+01   -1.0724003E+02    3.5986894E+03    2.1092497E+05    5.1000000E-01    2.3080000E+01
   1.498E-02 6.735E-04 5.191E-03 2.728E-02 8.190E+05
1.512E-06 3.680E-07 1.179E+01 6.992E+02 3.370E-06 1.525E+04 3.963E-05 4.043E+00
   SOOT   0.          0.          0.          0.          0.          0.          0.          0.          0.
                 1279    1128    1054    1006     971     943     927     910
                  681     659     647     639     633     627     624     877
                  571     566     563     562     560     559     558     850
                  548     548     547     547     546     546     546     827
                  544     544     544     544     544     544     544     809
                  544     544     544     544     544     544     544     794
```

```
                                                                                                                  753
                                                                                                                  683
    WTLOSSRATEIS 0.        LBS/SECANDTOTALWTLOSSIS   0.        LBSANDNOSERADIS 2.0800E-02FT
    QSTARIS 0.        BTU/LB
                          1700    1474    1312    1194    1103    1029     968     918     877     843     813     788     766
                           746     729     714     701     688     677     668     659     651     644     637     631     626
                           621     617     614     610     608     605     603     602     600     599     576

   1.4000000E+01    4.3343126E+01    1.9629149E+05    1.6613146E+05    1.6704801E+05   -2.3976507E+01    6.2783600E+00
                    2.5599236E-02    1.5325611E+04    2.2123579E+02    1.3856791E+01    4.8235510E-02    5.8630253E+05
                    1.1208902E+02    2.6024628E+00    1.7731313E+00   -2.5902184E+00    8.7958310E+01    1.7731313E+00
                    1.7605094E+07    8.6011395E+04    1.1581716E+07    1.1522694E+01    1.4401474E+01   -4.3308828E-01
                    3.3339099E+01   -1.0722008E+02    3.8784004E+03    2.2731668E+05    5.1000000E-01    2.3080000E+01
     1.499E-02 6.735E-04 5.213E-03 2.418E-02 1.060E+06
1.884E-06 3.680E-07 1.178E+01 6.985E+02 4.354E-06 1.526E+04 3.974E-05 5.219E+00
    SOOT   0.          0.          0.          0.          0.          0.          0.          0.          0.
                          1342    1179    1099    1048    1011     982     965     949
                           696     671     658     649     643     638     634     911
                           576     570     567     565     563     562     561     880
                           549     548     548     547     547     547     547     855
                           545     545     544     544     544     544     544     834
                           544     544     544     544     544     544     544     817
                                                                                    772
                                                                                    699
    WTLOSSRATEIS 0.        LBS/SECANDTOTALWTLOSSIS   0.        LBSANDNOSERADIS 2.0800E-02FT
    QSTARIS 0.        BTU/LB
                          1850    1581    1395    1259    1156    1075    1008     952     907     869     836     809     785
                           764     745     729     714     701     690     679     670     661     654     647     640     635
                           630     626     622     618     615     613     611     609     607     607     582

   1.5000000E+01    5.0261525E+01    2.1030477E+05    1.5991357E+05    1.6096582E+05   -2.3982365E+01    6.2783600E+00
                    2.4818769E-02    1.5335992E+04    2.7621350E+02    1.3866177E+01    4.4722456E-02    7.3150487E+05
                    1.1544582E+02   -2.1510748E+00   -1.4502537E+00    2.1832316E+00    9.4241271E+01    1.4502537E+00
                    1.7606982E+07    9.2148322E+04    1.1567795E+07    1.3338356E+01   -1.4706170E+01   -4.9568730E-01
                    3.3304599E+01   -1.0720014E+02    4.1830579E+03    2.4372149E+05    5.1000000E-01    2.3080000E+01
     1.498E-02 6.735E-04 5.206E-03 2.144E-02 1.374E+06
2.149E-06 3.680E-07 1.178E+01 6.987E+02 5.644E-06 1.527E+04 3.986E-05 6.767E+00
    SOOT   0.          0.          0.          0.          0.          0.          0.          0.          0.
                          1411    1235    1148    1093    1053    1023    1005     992
                           712     684     670     660     653     648     645     948
                           580     574     571     568     567     565     564     912
                           551     549     549     548     548     548     547     884
                           545     545     545     545     544     544     544     860
                           544     544     544     544     544     544     544     841
                                                                                    792
                                                                                    717
    W      ATFIS 0.        LBS/SECANDTOTALWTLOSSIS   0.        LBSANDNOSERADIS 2.0800E-02FT
    Q      S 0.        BTU/LB
                          2025    1700    1485    1328    1212    1122    1049     988     937     895     860     830     804
                           782     762     744     728     715     702     691     681     672     664     656     650     644
                           639     634     630     626     623     620     618     616     615     614     588
      TIME                X                Y                Z                ALT              GAMMA            VMAS
                          PSI,             VEL              QD               AMACH            CD               REN
                          PHI              THETA            ALPHA            BET              PS               ALPT
                          XF               YE               ZE               FD               FN               GFZ
                          LAT              LONG             BETA             GCIR             IZ               IX

   1.4000000E+01    5.4861058E+01    2.2431570E+05    1.5366519E+05    1.5486254E+05   -2.4085095E+01    6.2783600E+00
                    1.3477400E-02    1.5346097E+04    3.4571440E+02    1.3875314E+01    4.0439118E-02    9.1525871E+05
```

```
                    1.1368979E+02    2.0678500E-01    3.9423557E-01   -1.7378043E-01    1.0052448E+02    3.9423557E-01
                    1.7608845E+07    9.8284511E+04    1.1553858E+07    1.5095616E+01    5.0036158E+00   -4.7691382E-01
                    3.3270080E+01   -1.0718020E+02    4.6261300E+03    2.6013750E+05    5.1000000E-01    2.3080000E+01
     1.498E-02 6.735E-04 5.199E-03 1.498E-02 1.783E+06
2.936E-06 3.679E-07 1.179E+01 6.990E+02 7.321E-06 1.528E+04 3.999E-05 8.780E+00
    SOOT   0.          0.          0.          0.          0.          0.          0.          0.          0.
                         1486    1297    1202    1142    1099    1066    1040    1041
                          728     698     682     672     664     658     655     989
                          586     578     575     572     570     568     568     940
                          552     550     550     549     549     548     548     915
                          545     545     545     545     545     545     545     889
                          544     544     544     544     544     544     544     867
                                                                                  813
                                                                                  735
    WTLOSSRATEIS 0.        LBS/SECANDTOTALWTLOSSIS   0.        LBSANDNOSERADIS 2.0800E-02FT
    OSTARIS 0.        BTU/LB
                         2239    1838    1584    1405    1273    1172    1091    1025     969     923     885     852     824
                          800     778     759     743     728     715     703     692     683     674     666     659     653
                          647     642     638     634     631     628     626     624     622     621     594

   1.7000000E+01    6.3884691E+01    2.3832423E+05    1.4738711E+05    1.4873896E+05   -2.4193581E+01    6.2783600E+00
                    2.9740488E-02    1.5355832E+04    4.4209780E+02    1.3984111E+01    3.8564000E-02    1.1509423E+06
                    1.1324731E+02    2.3936146E+00    9.2985087E-01   -2.3733225E+00    1.0680885E+02    9.2985087E-01
                    1.7610681E+07    1.0441926E+05    1.1539907E+07    1.8409087E+01    1.5091845E+01   -4.8583327E-01
                    3.3235543E+01   -1.0716028E+02    4.8510681E+03    2.7856510E+05    5.1000000E-01    2.3080000E+01
     1.496E-02 6.735E-04 5.119E-03 1.849E-02 2.412E+06
3.750E-06 3.619E-07 1.186E+01 6.867E+02 9.762E-06 1.529E+04 4.012E-05 1.150E+01
    SOOT   0.          0.          0.          0.          0.          0.          0.          0.          0.
                         1569    1364    1262    1197    1150    1114    1095    1099
                          746     712     695     684     675     669     665     1038
                          591     583     579     576     574     572     571     989
                          553     552     551     550     550     549     549     950
                          545     545     545     545     545     545     545     920
                          545     545     544     544     544     544     544     895
                                                                                  835
                                                                                  753
    WTLOSSRATEIS 0.        LBS/SECANDTOTALWTLOSSIS   0.        LBSANDNOSERADIS 2.0800E-02FT
    OSTARIS 0.        BTU/LB
                         2511    2002    1695    1489    1338    1224    1136    1063    1003     953     910     875     845
                          818     795     775     757     742     728     715     704     693     684     676     669     662
                          656     651     646     642     639     636     633     631     630     629     600

   1.8000000E+01    7.1728240E+01    2.5232985E+05    1.4107951E+05    1.4259525E+05   -2.4299920E+01    6.2783600E+00
                    2.7031111E-02    1.5365015E+04    5.6865923E+02    1.4143610E+01    3.4902313E-02    1.5540608E+06
                    1.1428334E+02    7.7199146E-01    1.1111727E-02   -7.4745812E-01    1.1308992E+02    1.1111727E-02
                    1.7612492E+07    1.1055200E+05    1.1525941E+07    2.1430784E+01    2.3197668E-01   -5.1734083E-01
                    3.3200988E+01   -1.0714036E+02    5.3600064E+03    2.9300400E+05    5.1000000E-01    2.3080000E+01
     1.493E-02 6.735E-04 5.004E-03 1.429E-02 3.264E+06
4.817E-06 3.559E-07 1.198E+01 6.766E+02 1.305E-05 1.530E+04 4.027E-05 1.515E+01
    SOOT   0.          0.          0.          0.          0.          0.          0.          0.          0.
                         1660    1440    1329    1258    1208    1169    1147    1167
                          764     728     709     696     687     680     676     1094
                          597     588     583     580     578     576     575     1036
                          555     553     552     551     551     550     550     991
                          546     545     545     545     545     545     545     955
                          545     545     545     544     544     544     544     926
                                                                                  858
                                                                                  773
    WTLOSSRATEIS 0.        LBS/SECANDTOTALWTLOSSIS   0.        LBSANDNOSERADIS 2.0800E-02FT
    OSTARIS 0.        BTU/LB
```

```
                          2800    2209    1828    1584    1411    1282    1183    1104    1038     983     937     899     866
                           837     813     791     772     756     741     727     715     704     695     686     678     671
                           665     660     655     651     647     644     641     639     637     636     607

   1.9000000E+01    7.9897015E+01    2.6633190E+05    1.3474244E+05    1.3643146E+05   -2.4404908E+01    6.2783600E+00
                    2.7930974E-02    1.5373523E+04    7.3591308E+02    1.4306487E+01    3.3113305E-02    2.0444751E+06
                    1.1464807E+02   -2.5029848E-02   -2.4267724E-01    5.2375482E-02    1.1937266E+02    2.4267724E-01
                    1.7014277E+07    1.1668289E+05    1.1511960E+07    2.6312421E+01   -6.5564120E+00   -5.4730140E-01
                    3.3166417E+01   -1.0712046E+02    5.6495907E+03    3.0945319E+05    5.1000000E-01    2.3080000E+01
     1.491E-02 6.736E-04 4.891E-03 1.234E-02 4.423E+06
6.227E-06 3.499E-07 1.207E+01 6.664E+02 1.747E-05 1.531E+04 4.045E-05 1.998E+01
    SOOT   0.        0.        0.        0.        0.        0.        0.        0.        0.
                          1760    1523    1403    1327    1271    1229    1205    1246
                           783     744     723     710     700     693     688    1157
                           604     594     588     585     582     580     579    1089
                           557     555     553     553     552     551     551    1034
                           546     546     545     545     545     545     545     994
                           545     545     545     545     545     545     545     961
                                                                                   882
                                                                                   793
    WTLOSSRATEIS 0.        LBS/SECANDTOTALWTLOSSIS   0.        LBSANDNOSERADIS 2.0800E-02FT
    OSTARIS 0.        BTU/LB
                          3132    2457    1982    1690    1492    1344    1233    1146    1075    1016     965     923     888
                           857     831     808     788     770     754     740     727     716     705     696     688     681
                           674     669     663     659     655     652     649     647     645     644     614

   2.0000000E+01    8.8287010E+01    2.8032984E+05    1.2837622E+05    1.3024791E+05   -2.4510096E+01    6.2783600E+00
                    2.9815136E-02    1.5381222E+04    9.5840964E+02    1.4472719E+01    3.0976847E-02    2.7078258E+06
                    1.1452332E+02    9.2560599E-01   -2.0610044E-02   -8.9833741E-01    1.2565540E+02    2.0610044E-02
                    1.7614035E+07    1.2281168E+05    1.1497967E+07    3.2056798E+01   -7.2517155E-01   -5.7375907E-01
                    3.3131832E+01   -1.0710056E+02    6.0392402E+03    3.2591181E+05    5.1000000E-01    2.3080000E+01
     1.480E-02 6.736E-04 4.779E-03 1.061E-02 6.004E+06
8.102E-06 3.439E-07 1.217E+01 6.561E+02 2.342E-05 1.532E+04 4.066E-05 2.637E+01
    SOOT   0.        0.        0.        0.        0.        0.        0.        0.        0.
                          1871    1614    1485    1402    1342    1296    1270    1337
                           804     761     739     725     714     706     701    1228
                           611     599     593     589     586     584     583    1148
                           559     556     555     554     553     553     552    1006
                           546     546     546     546     545     545     545    1037
                           545     545     545     545     545     545     545     999
                                                                                   908
                                                                                   814
    WTLOSSRATEIS 0.        LBS/SECANDTOTALWTLOSSIS   0.        LBSANDNOSERADIS 2.0800E-02FT
    OSTARIS 0.        BTU/LB
                          3514    2732    2172    1814    1581    1414    1288    1191    1114    1049     995     949     910
                           878     849     825     803     784     767     752     739     727     716     707     698     690
                           684     678     672     668     663     660     657     655     653     652     621

   2.1000000E+01    9.7086557E+01    2.9432218E+05    1.2198129E+05    1.2404503E+05   -2.4614451E+01    6.2783600E+00
                    3.9469349E-02    1.5387823E+04    1.2564151E+03    1.4642157E+01    2.9572044E-02    3.6116457E+06
                    1.1432710E+02    1.8568285E+00    2.7151229E-01   -1.8234086E+00    1.3193808E+02    2.7151229E-01
                    1.7617767E+07    1.2893783E+05    1.1483962E+07    4.0118644E+01    1.2523719E+01   -6.1055112E-01
                    3.3097234E+01   -1.0708068E+02    6.3261308E+03    3.4237897E+05    5.1000000E-01    2.3080000E+01
     1.485E-02 6.736E-04 4.669E-03 9.092E-03 8.163E+06
1.061E-05 3.379E-07 1.228E+01 6.456E+02 3.145E-05 1.532E+04 4.091E-05 3.484E+01
    SOOT   0.        0.        0.        0.        0.        0.        0.        0.        0.
                          1991    1715    1575    1485    1420    1370    1341    1443
                           826     780     756     740     729     720     715    1309
                           618     605     599     595     591     589     587    1213
```

```
                    561     558     556     555     555     554     554    1140
                    547     546     546     546     546     546     546    1084
                    546     545     545     545     545     545     545    1040
                                                                           936
                                                                           837
WTLOSSRATEIS 0.        LBS/SECANDTOTALWTLOSSIS   0.        LBSANDNOSERADIS 2.0800E-02FT
QSTARIS 0.        BTU/LB
                   3926    3042    2403    1960    1682    1491    1348    1240    1154    1085    1026     976     934
                    899     869     842     819     799     781     765     751     739     727     717     708     700
                    693     687     681     676     672     668     665     663     661     660     628

2.2000000E+01    1.0674528E+02    3.0830839E+05    1.1555825E+05    1.1782338E+05   -2.4718548E+01    6.2783600E+00
                 4.0567211E-02    1.5393041E+04    1.6583860E+03    1.4814638E+01    2.7839914E-02    4.8524564E+06
                 1.1477279E+02   -1.6840097E+00   -3.8427284E-02    1.7212835E+00    1.3822092E+02    3.8427284E-02
                 1.7619473E+07    1.3506043E+05    1.1469945E+07    4.9852307E+01   -2.3395696E+00   -6.6581305E-01
                 3.3062627E+01   -1.0706081E+02    6.7197269E+03    3.5885364E+05    5.1000000E-01    2.3080000E+01
  1.482E-02 6.737E-04 4.561E-03 7.757E-03 1.112E+07
1.400E-05 3.318E-07 1.239E+01 6.351E+02 4.229E-05 1.533E+04 4.118E-05 4.609E+01
  SOOT   0.        0.        0.        0.        0.        0.        0.        0.        0.
                   2124    1825    1674    1576    1506    1451    1420    1563
                    851     800     774     757     745     735     730    1400
                    626     612     605     600     597     594     592    1284
                    563     560     558     557     556     555     555    1200
                    547     547     546     546     546     546     546    1135
                    546     545     545     545     545     545     545    1085
                                                                           967
                                                                           860
WTLOSSRATEIS 0.        LBS/SECANDTOTALWTLOSSIS   0.        LBSANDNOSERADIS 2.0800E-02FT
QSTARIS 0.        BTU/LB
                   4390    3396    2663    2133    1797    1575    1414    1292    1198    1122    1059    1005     959
                    921     888     860     836     814     795     779     764     750     739     728     718     710
                    703     696     690     685     680     677     673     671     669     668     636

2.3000000E+01    1.1609612E+02    3.2228667E+05    1.0910768E+05    1.1158354E+05   -2.4825204E+01    6.2783600E+00
                 4.4439153E-02    1.5396358E+04    2.2045428E+03    1.4989768E+01    2.6548792E-02    6.5693196E+06
                 1.1476330E+02    1.4273871E+00    4.8749256E-02   -1.3875829E+00    1.4450371E+02    4.8749256E-02
                 1.7621152E+07    1.4117983E+05    1.1455918E+07    6.3196796E+01    3.9454560E+00   -7.3172447E-01
                 3.3028014E+01   -1.0704096E+02    7.0465211E+03    3.7533334E+05    5.1000000E-01    2.3080000E+01
  1.479E-02 6.737E-04 4.455E-03 6.588E-03 1.516E+07
1.860E-05 3.258E-07 1.249E+01 6.249E+02 5.694E-05 1.533E+04 4.149E-05 6.101E+01
  SOOT   0.        0.        0.        0.        0.        0.        0.        0.        0.
                   2275    1944    1781    1676    1599    1540    1507    1700
                    878     822     794     775     762     752     746    1503
                    634     619     611     606     602     599     597    1364
                    566     562     560     559     558     557     556    1264
                    548     547     547     547     546     546     546    1190
                    546     546     546     545     545     545     545    1133
                                                                           998
                                                                           860
WTLOSSRATEIS 0         LBS/SECANDTOTALWTLOSSIS   0.        LBSANDNOSERADIS 2.0800E-02FT
QSTARIS 0.        BTU/LB
                   4908    3784    2980    2346    1934    1671    1488    1349    1244    1161    1092    1035     986
                    944     909     879     853     830     810     792     776     762     750     739     729     720
                    712     705     699     694     689     685     682     679     677     676     643
  TIME             X               Y               Z               ALT             GAMMA           VMAS
                   PSI             VEL             QD              AMACH           CD              REN
                   PHI             THETA           ALPHA           BET             PS              ALPT
                   XF              YF              ZF              FD              FN              GFZ
                   LAT             LONG            BETA            QCIR            IZ              IX

2.4000000E+01    1.2614421E+02    3.3625501E+05    1.0263060E+05    1.0532647E+05   -2.4930328E+01    6.2783600E+00
```

```
                    4.0124096E-02    1.5396306E+04    2.9518186E+03    1.5166102E+01    4.2038934E-02    8.9636736E+06
                    1.1508015E+02    1.4418523E+00   -1.6365821E-01   -1.4039187E+00    1.5078658E+02    1.6365821E-01
                    1.7622804E+07    1.4729423E+06    1.1441884E+07    1.3399022E+.     -1.7735283E+01   -1.0872022E+00
                    3.2993400E+01   -1.0702112E+02    4.4500800E+03    3.9181632E+05    5.1000000E-01    2.3080000E+01
    1.477E-02 6.737E-04 4.352E-03 2.197E-02 2.071E+07
2.491E-05 3.197E-07 1.260E+01 6.137E+02 7.676E-05 1.533E+04 4.184E-05 8.084E+01
    5007   0.          0.          0.          0.          0.          0.          0.          0.
                         2445    2075    1899    1785    1702    1638    1602    1856
                          911     845     815     795     781     769     763    1616
                          643     627     618     612     608     605     603    1452
                          560     564     562     561     559     559     558    1334
                          548     548     547     547     547     547     546    1248
                          547     546     546     546     546     545     545    1183
                                                                                 1029
                                                                                  860
    WTLOSSRATEIS 0.        LBS/SECANDTOTALWTLOSSIS   0.        LBSANDNOSERADIS 2.0800E-02FT
    OSTARIS 0.        BTU/LB
                         5474    4215    3280    2592    2093    1778    1567    1413    1295    1203    1128    1066    1014
                          969     931     898     870     846     825     806     789     775     761     750     739     730
                          722     715     708     703     698     694     690     687     685     684     651

   2.5000000E+01    1.3665546E+02    3.5020577E+05    9.6130472E+04    9.9055803E+04   -2.5036367E+01    6.2783600E+00
                    4.9753359E-02    1.5384147E+04    3.9774748E+03    1.5335136E+01    4.0190298E-02    1.2322995E+07
                    1.1506981E+02    8.9376847E-01   -4.2044374E-02   -8.4830440E-01    1.5704941E+02    4.2044376E-02
                    1.7624429E+07    1.5340054E+05    1.1427851E+07    1.7260780E+02   -6.1394013E+00   -1.2782149E+00
                    3.2958804E+01   -1.0700132E+02    4.0547706E+03    4.0829344E+05    5.1000000E-01    2.3080000E+01
    1.474E-02 6.738E-04 4.257E-03 2.044E-02 2.031E+07
3.341E-05 3.136E-07 1.271E+01 6.026E+02 1.038E-04 1.532E+04 4.222E-05 1.071E+02
    5007   0.          0.          0.          0.          0.          0.          0.          0.
                         2634    2222    2024    1903    1814    1744    1705    2035
                          948     871     837     816     800     788     781    1740
                          651     638     625     619     615     611     609    1547
                          571     567     564     563     561     560     560    1410
                          549     548     548     547     547     547     547    1310
                          547     546     546     546     546     546     546    1236
                                                                                 1060
                                                                                  860
    WTLOSSRATEIS 0.        LBS/SECANDTOTALWTLOSSIS   0.        LBSANDNOSERADIS 2.0800E-02FT
    OSTARIS 0.        BTU/LB
                         6102    4693    3643    2858    2289    1907    1658    1483    1349    1247    1166    1099    1043
                          995     953     918     889     863     840     820     803     787     773     761     750     740
                          732     724     717     712     707     702     699     696     694     692     659

   2.6000000E+01    1.4760915E+02    3.6413043E+05    8.9611334E+04    9.2774500E+04   -2.5138585E+01    6.2783578E+00
                    1.0211939E-02    1.5364720E+04    5.3980940E+03    1.5501141E+01    3.8598569E-02    1.7087774E+07
                    1.1510634E+02   -5.4201182E-01    3.0386023E-02    5.7623229E-01    1.6335230E+02    3.0386023E-02
                    1.7624024E+07    1.5949499E+05    1.1413825E+07    2.2497974E+02    7.6073418E+00   -1.5380598E+00
                    3.2924247E+01   -1.0698155E+02    4.8467227E+03    4.2475465E+05    5.1000000E-01    2.3080000E+01
    1.472E-02 4.971E-04 4.166E-03 1.895E-02 3.874E+07
4.971E-05 3.075E-07 1.281E+01 5.913E+02 1.399E-04 1.530E+04 4.268E-05 1.419E+02
    5007   0.          0.          0.          0.          0.          0.          0.          2.364E-04
                         2844    2388    2168    2031    1934    1860    1817    2251
                          991     902     862     838     822     807     801    1884
                          660     643     633     626     621     618     615    1652
                          574     569     567     565     563     562     562    1493
                          550     549     548     548     548     547     547    1377
                          548     547     547     546     546     546     546    1291
                                                                                 1060
                                                                                  860
    WTLOSSRATEIS 1.8444E-04LBS/SECANDTOTALWTLOSSIS   6.9916E-09LBSANDNOSERADIS 2.1202E-02FT
```

```
QSTARIS 0.        BTU/LB
                        6400    5130    4021    3159    2520    2052    1759    1558    1410    1295    1206    1133    1073
                        1021     977     940     907     880     856     835     816     800     785     772     761     751
                         742     734     727     721     716     711     707     704     702     700     666

  2.7000000E+01    1.5877802E+02    3.7802130E+05    8.3076808E+04    8.6406900E+04   -2.5243955E+01    6.2783508E+00
                   4.1500352E-02    1.5335547E+04    7.3783347E+03    1.5661462E+01    3.7255702E-02    2.3922539E+07
                   1.1509979E+02   -6.6634532E-01    1.5180525E-01    7.0229355E-01    1.6963527E+02    1.5180525E-01
                   1.7627590E+07    1.6557444E+05    1.1399817E+07    2.9681296E+02    4.1120256E+01   -1.8935680E+00
                   3.2889748E+01   -1.0696184E+02    5.0214155E+03    4.4119071E+05    5.1000000E-01    2.3080000E+01
    1.469E-02 7.827E-04 4.081E-03 1.747E-02 5.312E+07
6.275E-05 3.014E-07 1.290E+01 5.796E+02 1.890E-04 1.527E+04 4.324E-05 1.880E+02
  SOOT   0.        0.        0.        0.        0.        0.        0.        9.979E-04
                        3075    2571    2326    2173    2065    1984    1938    2517
                        1041     938     891     864     845     831     823    2050
                         669     652     641     634     629     625     622    1767
                         577     572     569     567     566     565     564    1581
                         551     549     549     548     548     548     548    1446
                         548     547     547     547     547     546     546    1345
                                                                                1060
                                                                                 860
  WTLOSSRATFIS 3.6534E-04LBS/SECANDTOTALWTLOSSIS   2.9515E-04LBSANDNOSERADIS 2.2499E-02FT
  QSTARIS 0.        BTU/LB
                        6400    5400    4321    3440    2746    2225    1876    1643    1476    1347    1249    1170    1104
                        1049    1002     962     927     898     872     850     830     813     798     784     772     761
                         752     744     736     730     725     720     716     713     711     709     674

  2.8000000E+01    1.7012604E+02    3.9186813E+05    7.6531839E+04    8.0197398E+04   -2.5353572E+01    6.2783402E+00
                   5.1463755E-02    1.5293335E+04    1.0059212E+04    1.5790744E+01    3.6036543E-02    3.3294779E+07
                   1.1557721E+02    7.3818665E-01   -2.3109357E-01   -6.8920536E-01    1.7591830E+02    2.3109357E-01
                   1.7629125E+07    1.7163442E+05    1.1385835E+07    3.9141623E+02   -8.5341934E+01   -2.3694359E+00
                   3.2855333E+01   -1.0694219E+02    5.1912873E+03    4.5758942E+05    5.1000000E-01    2.3080000E+01
    1.467E-02 9.232E-04 4.014E-03 1.610E-02 7.176E+07
8.602E-05 2.969E-07 1.298E+01 5.723E+02 2.528E-04 1.523E+04 4.380E-05 2.483E+02
  SOOT   0.        0.        0.        0.        0.        0.        0.        2.150E-03
                        3326    2774    2503    2332    2212    2120    2070    2787
                        1097     979     925     893     871     855     846    2251
                         679     660     650     642     637     632     630    1901
                         581     575     572     570     568     567     566    1676
                         551     550     550     549     549     548     548    1518
                         549     548     547     547     547     547     547    1399
                                                                                1060
                                                                                 860
  WTLOSSRATEIS 5.0673E-04LBS/SECANDTOTALWTLOSSIS   6.3579E-04LBSANDNOSERADIS 2.4460E-02FT
  QSTARIS 0.        BTU/LB
                        6400    5678    4587    3689    2965    2409    2002    1734    1546    1404    1295    1208    1137
                        1078    1028     985     948     916     889     865     844     826     810     796     783     772
                         762     754     746     739     734     729     725     722     719     717     683

  2.9000000E+01    1.8196328E+02    4.0565749E+05    6.9982752E+04    7.3911977E+04   -2.5459965E+01    6.2783260E+00
                   5.3072215E-02    1.5234616E+04    1.3472759E+04    1.5730115E+01    3.4943276E-02    4.4946754E+07
                   1.1566712E+02    5.7503922E-01   -2.1285998E-01   -5.2481526E-01    1.8220139E+02    2.1285998E-01
                   1.7630628E+07    1.7766[illegible]E+05    1.1371893E+07    5.0833721E+02   -1.0528372E+02   -2.9496750E+00
                   3.2821036E+01   -1.0692263E+02    5.3536948E+03    4.7393499E+05    5.1000000E-01    2.3080000E+01
    1.468E-02 1.130E-03 4.045E-03 1.480E-02 9.365E+07
1.161E-04 2.969E-07 1.294E+01 5.711E+02 3.294E-04 1.517E+04 4.540E-05 3.228E+02
  SOOT   0.        0.        0.        0.        0.        0.        0.        3.694E-03
                        3590    2990    2692    2504    2370    2677    2875    3078
                        1161    1026     964     927     901     886     883    2478
```

```
                    690     669     658     651     645     640     638    2047
                    584     578     575     572     571     569     568    1777
                    552     551     550     550     549     549     549    1592
                    549     548     548     548     547     547     547    1454
                                                                           1060
                                                                            860
WTLOSSRATEIS 9.7374E-04LBS/SECANDTOTALWTLOSSIS   1.0924E-03LBSANDNOSERADIS 2.7088E-02FT
QSTARIS 0.        BTU/LB
                    6400    5978    4854    3931    3181    2591    2135    1830    1620    1464    1343    1248    1172
                    1108    1055    1009     969     935     906     881     859     840     823     808     795     783
                     773     764     756     749     743     738     734     730     728     726     691

3.0000000E+01   1.9415298E+02   4.1937260E+05   6.3437662E+04   6.7638309E+04  -2.5561643E+01   6.2782796E+00
                4.5493393E-02   1.5154919E+04   1.7987425E+04   1.5647826E+01   3.3701085E-02   6.0622161E+07
                1.1555821E+02  -6.3148071E-02   4.6528959E-03   1.0414372E-01   1.8848454E+02   4.6528959E-03
                1.7632097E+07   1.8367024E+05   1.1358009E+07   6.5455272E+02   3.0725785E+00  -3.6718282E+00
                3.2786897E+01  -1.0690318E+02   5.5509858E+03   4.9020732E+05   5.1000000E-01   2.3080000E+01
  1.469E-02 1.435E-03 4.088E-03 1.347E-02 1.220E+08
1.566E-04 2.969E-07 1.289E+01 5.695E+02 4.284E-04 1.509E+04 4.597E-05 4.187E+02
SDOT   0.         0.         0.         0.         0.         0.         0.         0.         8.742E-03
                    3864    3216    2893    2686    3246    3553    3676    3378
                    1232    1080    1009     966     948     948     951    2708
                     702     678     667     659     653     649     647    2216
                     588     581     578     575     573     572     571    1890
                     553     552     551     550     550     550     550    1671
                     550     549     549     548     548     548     548    1511
                                                                           1060
                                                                            860
WTLOSSRATEIS 9.6317E-04LBS/SECANDTOTALWTLOSSIS   2.5854E-03LBSANDNOSERADIS 3.0470E-02FT
QSTARIS 0.        BTU/LB
                    6400    6400    5156    4176    3394    2767    2281    1935    1698    1526    1394    1290    1208
                    1140    1082    1034     992     955     924     898     874     854     836     820     807     794
                     784     774     766     759     752     747     743     739     737     735     699

3.1000000E+01   2.0650734E+02   4.3299196E+05   5.6907058E+04   6.1386296E+04  -2.5673637E+01   6.2782652E+00
                5.4745747E-02   1.5048256E+04   2.3907315E+04   1.5537694E+01   3.2987327E-02   8.1484728E+07
                1.1583447E+02   3.2928606E-01  -1.6381869E-01  -2.7816731E-01   1.9476779E+02   1.6381869E-01
                1.7633530E+07   1.8962960E+05   1.1344205E+07   8.5154908E+02  -1.4378213E+02  -4.6514248E+00
                3.2752972E+01  -1.0688387E+02   5.6710814E+03   5.0638062E+05   5.1000000E-01   2.3080000E+01
  1.471E-02 1.696E-03 4.146E-03 1.222E-02 1.504E+08
2.111E-04 2.969E-07 1.283E+01 5.673E+02 5.560E-04 1.498E+04 4.722E-05 5.412E+02
SDOT   0.         0.         0.         0.         0.         0.         0.         0.         1.031E-02
                    4148    3452    3102    3802    4166    4356    4430    4055
                    1311    1140    1059    1028    1030    1041    1045    3008
                     715     689     676     668     663     659     656    2412
                     592     585     581     578     576     575     574    2014
                     554     553     552     551     551     550     550    1755
                     551     550     549     549     548     548     548    1571
                                                                           1060
                                                                            860
WTLOSSRATEIS 1.3771E-03LBS/SECANDTOTALWTLOSSIS   3.0498E-03LBSANDNOSERADIS 3.3143E-02FT
QSTARIS 0.        BTU/LB
                    6400    6400    5557    4481    3631    2957    2438    2044    1780    1591    1447    1334    1245
                    1172    1111    1059    1015     976     943     914     890     868     850     833     819     806
                     794     785     776     768     762     757     752     748     746     744     707
  TIME              X               Y               Z               ALT             GAMMA           VMAS
                    PSI             VEL             QD              AMACH           CD              REN
                    [illegible]     THETA           ALPHA           BET             PS              ALPT
                    XE              YE              ZE              FD              FN              GFZ
                    LAT             LONG            BETA            GCIR            IZ              IX
```

```
3.2000000E+01    2.1916943E+02    4.4648801E+05    5.0404296E+04    5.5168526E+04   -2.5782704E+01    6.2782479E+00
                 5.7901008E-02    1.4907094E+04    3.1579669E+04    1.5391940E+01    3.2028597E-02    1.0920181E+08
                 1.1577876E+02    8.3928392E-02    3.6701442E-03   -3.1833118E-02    2.0105108E+02    3.6701442E-03
                 1.7634924E+07    1.9553462E+05    1.1330507E+07    1.0921373E+03    4.2550177E+00   -5.8416131E+00
                 3.2719328E+01   -1.0686473E+02    5.8408212E+03    5.2242198E+05    5.1000000E-01    2.3080000E+01
   1.473E-02 2.038E-03 4.225E-03 1.103E-02 2.047E+00
2.842E-04 2.969E-07 1.274E+01 5.644E+02 7.191E-04 1.484E+04 4.952E-05 6.965E+02
   SDOT   0.        0.        0.        0.        0.        0.        0.        0.        1.220E-02
                 4446    3694    4222    4804    5029    5138    5175    5074
                 1401    1206    1132    1136    1153    1172    1182    3715
                  729     700     686     678     673     670     668    2808
                  596     588     584     581     579     578     577    2224
                  556     554     553     552     552     551     551    1070
                  552     550     550     549     549     549     549    1643
                                                                         1060
                                                                          860
   WTLOSSRATEIS 2.1239E-03LBS/SECANDTOTALWTLOSSIS   3.6074E-03LBSANDNOSERADIS 3.6353E-02FT
   QSTARIS 0.        BTU/LB
                 6400    6400    5947    4800    3869    3166    2603    2166    1868    1659    1503    1380    1283
                 1205    1140    1085    1038     997     962     932     906     883     863     846     831     817
                  806     795     786     778     772     766     761     758     755     753     716

3.3000000E+01    2.3200755E+02    4.5982552E+05    4.3946687E+04    4.9001293E+04   -2.5891421E+01    6.2781990E+00
                 5.8101429E-02    1.4721625E+04    4.1364030E+04    1.5200439E+01    3.1563017E-02    1.4570261E+08
                 1.1585339E+02    2.6566337E-02    3.8380305E-02    2.5293530E-02    2.0733441E+02    3.8380305E-02
                 1.7636276E+07    2.0136999E+05    1.1316953E+07    1.4097208E+03    5.8283006E+01   -7.4150638E+00
                 3.2686055E+01   -1.0684583E+02    5.9269317E+03    5.3828916E+05    5.1000000E-01    2.3080000E+01
   1.476E-02 2.512E-03 4.332E-03 9.917E-03 2.631E+08
3.817E-04 2.969E-07 1.262E+01 5.606E+02 9.259E-04 1.466E+04 5.092E-05 8.908E+02
   SDOT   0.        0.        0.        0.        0.        0.        0.        0.        1.752E-02
                 4747    4159    5384    5730    5849    5894    5901    5786
                 1501    1279    1262    1293    1320    1342    1352    4318
                  745     713     698     691     687     685     684    3263
                  601     592     588     585     583     581     580    2534
                  557     553     554     553     553     552     552    2039
                  553     551     551     550     550     549     549    1740
                                                                         1060
                                                                          860
   WTLOSSRATEIS 2.2213E-03LBS/SECANDTOTALWTLOSSIS   5.1812E-03LBSANDNOSERADIS 4.0316E-02FT
   QSTARIS 0.        BTU/LB
                 6400    6400    6400    5174    4167    3388    2777    2306    1967    1732    1561    1428    1323
                 1239    1170    1112    1062    1019     982     950     922     896     877     859     843     829
                  817     806     797     788     781     776     771     767     764     762     725

3.4000000E+01    2.4497912E+02    4.7295956E+05    3.7556386E+04    4.2905430E+04   -2.6001686E+01    6.2781758E+00
                 5.8331901E-02    1.4480170E+04    5.3572294E+04    1.4951131E+01    3.1170063E-02    1.9291094E+08
                 1.1596520E+02    2.2035493E-02    3.6884319E-02    3.0004922E-02    2.1361776E+02    3.6884319E-02
                 1.7637582E+07    2.0711604E+05    1.1303589E+07    1.8030579E+03    7.2542527E+01   -9.3641090E+00
                 3.2653266E+01   -1.0682721E+02    6.0016335E+03    5.5392817E+05    5.1000000E-01    2.3080000E+01
   1.480E-02 2.959E-03 4.478E-03 8.893E-03 3.351E+08
5.110E-04 2.969E-07 1.247E+01 5.558E+02 1.185E-03 1.442E+04 5.201E-05 1.130E+03
   SDOT   0.        0.        0.        0.        0.        0.        0.        1.148E-05 1.955E-02
                 5044    5665    6386    6566    6605    6602    6587    6400
                 1613    1409    1452    1498    1528    1550    1560    4867
                  763     727     714     708     705     703     702    3710
                  606     597     592     589     587     585     584    2859
                  558     556     555     554     553     553     553    2258
                  554     552     551     551     550     550     550    1860
```

```
                                                                                          1060
                                                                                           860
WTLOSSRATEIS 5.6249E-03LBS/SECANDTOTALWTLOSSIS   5.9280E-03LBSANDNOSERADIS 4.3532E-02FT
QSTARIS 6.2528E+03BTU/LB
                       6400    6400    6400    5660    4521    3650    2975    2462    2072    1811    1622    1479    1365
                       1275    1201    1139    1087    1042    1002     968     939     914     892     873     856     841
                        828     817     807     799     791     785     780     776     773     771     733

3.5000000E+01   2.5801741E+02   4.8583481E+05   3.1260808E+04   3.6906678E+04   -2.6114147E+01   6.2421419E+00
                5.8779700E-02   1.4172297E+04   6.8392552E+04   1.4633244E+01   3.0227403E-02   2.5000087E+08
                1.1609253E+02   3.3368191E-02   2.1895502E-02   1.9185201E-02   2.1990112E+02   2.1895502E-02
                1.7638836E+07   2.1274858E+05   1.1290469E+07   2.2252712E+03   5.4804465E+01   -1.1514961E+01
                3.3621099E+01   -1.0680897E+02  6.1753212E+03   5.6927256E+05   5.1000000E-01   2.3080000E+01
  1.485E-02 2.488E-03 4.674E-03 8.190E-03 4.171E+08
6.810E-04 2.969E-07 1.227E+01 5.498E+02 1.505E-03 1.411E+04 5.318E-05 1.419E+03
 SDOT    0.        1.573E-04    9.693E-04    1.121E-03    1.130E-03    1.080E-03    9.860E-04    4.148E-04    2.234E-02
                       5324    6760    6760    6760    6760    6760    6760    6400
                       1735    1651    2100    2261    2321    2333    2298    5200
                        782     744     737     735     733     732     730    4077
                        612     601     596     593     591     590     589    3181
                        560     557     556     555     555     554     554    2507
                        555     553     552     552     551     551     551    2014
                                                                                1060
                                                                                 860
WTLOSSRATEIS 1.4796E+00LBS/SECANDTOTALWTLOSSIS   1.1653E+00LBSANDNOSERADIS 3.9515E-02FT
QSTARIS 5.8218E+03BTU/LB
                       6400    6400    6400    6182    4918    3950    3204    2634    2198    1899    1689    1532    1410
                       1312    1233    1167    1112    1064    1023     987     956     930     906     886     869     853
                        840     828     818     809     801     795     790     786     782     780     742

3.6000000E+01   2.7104423E+02   4.9839173E+05   2.5089733E+04   3.1032908E+04   -2.6230124E+01   6.1844773E+00
                6.0004137E-02   1.3801142E+04   8.1666356E+04   1.3954017E+01   2.9191509E-02   2.8949270E+08
                1.1622653E+02   5.0087543E-02   3.7060172E-03   3.7001607E-03   2.2618448E+02   3.7060172E-03
                1.7640033E+07   2.1824158E+05   1.1277657E+07   2.5535016E+03   1.1022140E+01   -1.3268859E+01
                3.2589705E+01   -1.0679118E+02  6.3667841E+03   5.8425059E+05   5.1000000E-01   2.3080000E+01
  1.497E-02 1.199E-03 5.140E-03 7.880E-03 4.700E+08
8.575E-04 3.078E-07 1.184E+01 5.573E+02 1.796E-03 1.374E+04 5.253E-05 1.717E+03
 SDOT    0.        2.092E-03    2.702E-03    2.745E-03    2.673E-03    2.559E-03    2.428E-03    1.215E-03    2.868E-02
                       5568    6760    6760    6760    6760    6760    6760    6400
                       1866    2735    3266    3409    3439    3421    3362    5456
                        803     780     789     793     793     792     789    4358
                        618     607     602     600     598     596     595    3454
                        561     559     557     556     556     555     555    2731
                        556     554     553     552     552     552     551    2178
                                                                                1060
                                                                                 860
WTLOSSRATEIS 1.5392E+00LBS/SECANDTOTALWTLOSSIS   3.0206E+00LBSANDNOSERADIS 2.6956E-02FT
QSTARIS 5.4828E+03BTU/LB
                       6400    6400    6400    6400    5657    4390    3495    2835    2348    2001    1762    1590    1457
                       1351    1266    1196    1138    1088    1044    1007     974     946     922     900     882     866
                        852     839     829     819     812     805     800     795     792     789     751

3.7000000E+01   2.8398555E+02   5.1057803E+05   1.9069685E+04   2.5308779E+04   -2.6349855E+01   6.1251836E+00
                6.1514541E-02   1.3373414E+04   9.4332156E+04   1.3206643E+01   2.8715926E-02   3.2350201E+08
                1.1634840E+02   5.3939236E-02   1.5451962E-03   1.1685716E-03   2.3246784E+02   1.5451962E-03
                1.7641169E+07   2.2357218E+05   1.1265206E+07   2.8866867E+03   5.2812823E+00   -1.5084538E+01
                3.2559215E+01   -1.0677391E+02  6.4431403E+03   5.9879891E+05   5.1000000E-01   2.3080000E+01
  1.511E-02 2.456E-04 5.739E-03 7.620E-03 5.067E+08
1.055E-03 3.199E-07 1.135E+01 5.718E+02 2.090E-03 1.332E+04 5.183E-05 2.050E+03
```

```
SDOT   0.          4.048E-03   4.485E-03   4.423E-03   4.270E-03   4.091E-03   3.920E-03   2.274E-03   3.682E-02
                       6527        6760        6760        6760        6760        6760        6760        6400
                       2016        4168        4705        4770        4733        4658        4562        5711
                        826         859         892         901         901         897         890        4610
                        625         615         611         609         608         606         605        3692
                        563         560         559         558         557         557         556        2930
                        557         555         554         553         553         552         552        2344
                                                                                                           1060
                                                                                                            860
WTLOSSRATEIS 1.5841E+00LBS/SECANDTOTALWTLOSSIS   4.9283E+00LBSANDNOSERADIS 1.1750E-02FT
QSTARIS 5.1062E+03BTU/LB
                       6400        6400        6400        6400        6400        5305        3969        3122        2542        2121        1847        1653        1508
                       1393        1301        1227        1164        1112        1066        1027         993         963         937         915         895         878
                        864         851         840         830         822         815         809         805         801         799         760


3.8000000E+01    2.9676008E+02    5.2234110E+05    1.3227624E+04    1.9759276E+04   -2.6473744E+01    6.0598707E+00
                 6.2918260E-02    1.2883235E+04    1.0604634E+05    1.2441658E+01    2.8970519E-02    3.5727562E+08
                 1.1647367E+02    5.6303680E-02    1.3104770E-04    1.5421329E-05    2.3875120E+02    1.5104770E-04
                 1.7642240E+07    2.2871740E+05    1.1253169E+07    3.2564899E+03    5.7727999E-01   -1.7138941E+01
                 3.2529764E+01   -1.0675725E+02    6.3526840E+03    6.1285368E+05    5.1000000E-01    2.3080000E+01
  1.527E-02 8.046E-06 6.466E-03 7.225E-03 5.450E+08
1.278E-03 3.317E-07 1.082E+01 5.844E+02 2.416E-03 1.283E+04 5.104E-05 2.423E+03
SDOT   1.926E-03   6.052E-03   6.362E-03   6.189E-03   5.947E-03   5.694E-03   5.478E-03   3.576E-03   5.525E-02
                       6760        6760        6760        6760        6760        6760        6760        6400
                       2844        5924        6251        6192        6075        5941        5814        5969
                        861        1018        1078        1086        1081        1070        1056        4853
                        632         625         623         622         620         619         617        3915
                        565         562         561         560         559         558         558        3137
                        559         556         555         555         554         554         553        2509
                                                                                                           1060
                                                                                                            860
WTLOSSRATEIS 1.7811E+00LBS/SECANDTOTALWTLOSSIS   7.0297E+00LBSANDNOSERADIS 2.1767E-03FT
QSTARIS 4.6876E+03BTU/LB
                       6400        6400        6400        6400        6400        6400        6400        4861        3065        2347        1965        1731        1566
                       1439        1339        1259        1192        1136        1089        1047        1011         980         953         929         909         891
                        876         862         851         841         832         825         819         815         811         808         769


3.9000000E+01    3.0927702E+02    5.3362208E+05    7.5939767E+03    1.4412572E+04   -2.6602781E+01    5.9581510E+00
                 6.4244437E-02    1.0320872E+04    1.1577007E+05    1.1[illegible]0721E+01    3.0400057E-02    3.9196982E+08
                 1.1660274E+02    5.7403778E-02    1.1241357E-04    3.8193064E-05    2.4503456E+02    1.1241357E-04
                 1.7643242E+07    2.3365151E+05    1.1241608E+07    3.7093165E+03    4.6635557E-01   -1.9754259E+01
                 3.2501501E+01   -1.0674127E+02    5.9964422E+03    6.2634340E+05    5.1000000E-01    2.3080000E+01
  1.546E-02 3.443E-06 7.373E-03 7.563E-03 5.863E+08
1.525E-03 3.431E-07 1.026E+01 5.950E+02 2.771E-03 1.227E+04 5.016E-05 2.829E+03
SDOT   4.157E-03   9.260E-03   9.357E-03   9.147E-03   8.825E-03   8.608E-03   7.135E-03   5.134E-03   8.955E-02
                       6760        6760        6760        6760        6760        6760        6760        6400
                       4242        6760        6760        6760        6760        6760        6680        6206
                        939        1585        1725        1642        1473        1344        1287        5085
                        641         642         643         640         637         635         633        4129
                        567         564         563         562         561         561         560        3326
                        560         558         557         556         555         555         555        2659
                                                                                                           1060
                                                                                                            860
WTLOSSRATEIS 1.5396E+00LBS/SECANDTOTALWTLOSSIS   1.0302E+01LBSANDNOSERADIS 1.4320E-03FT
QSTARIS 4.2251E+03BTU/LB
                       6400        6400        6400        6400        6400        6400        6400        6400        6400        6400        6400        4104        2033
                       1587        1409        1302        1225        1163        1112        1068        1031         998         969         944         923         904
                        888         874         862         852         843         836         829         824         821         818         778
  TIME                 X                   Y                   Z                   ALT                 GAMMA               VMAS
                       PSI.                VEL                 QD                  AMACH               CD                  REN
```

```
                        PHI                THETA              ALPHA              BET                PS                ALPT
                        XE                 YE                 ZE                 FD                 FN                GFZ
                        LAT                LONG               BETA               QCIR               IZ                IX

   4.0000000E+01     3.2142579E+02     5.4434838E+05     2.2063965E+03     9.3036353E+03    -2.6738445E+01     5.8963068E+00
                     6.5550739E-02     1.1675938E+04     1.2232342E+05     1.0825397E+01     3.1673323E-02     4.2669005E+08
                     1.1673848E+02     5.8540495E-02     4.1042428E-05     5.1103690E-07     2.5131792E+02     4.1042428E-05
                     1.7644169E+07     2.3834279E+05     1.1230599E+07     4.0485423E+03     1.7836803E-01    -2.1[illegible]8103[illegible]E+01
                     3.2474610E+01    -1.0672608E+02     5.7342915E+03     6.3917992E+05     5.1000000E-01     2.3080000E+01
     1.568E-02 1.004E-04 8.540E-03 7.349E-03 6.284E+08
1.795E-03 3.539E-07 9.658E+00 6.034E+02 3.145E-03 1.163E+04 4.920E-05 3.257E+03
    SDOT   6.317E-03   1.095E-02   1.089E-02   1.057E-02   1.017E-02   9.889E-0[illegible]   9.589E-03   8.852E-03   1.117E-01
                         6760    6760    6760    6760    6760    6760    6[illegible]60    6400
                         6089    6760    6760    6760    6760    6760    6760    6400
                         1102    2811    2915    2772    2543    2379    2182    5343
                          652     684     688     682     673     667     661    4350
                          569     567     566     565     564     564     563    3511
                          562     559     558     557     557     556     556    2805
                                                                                 1060
                                                                                  860
    WTLOSSRATEIS 1.3126E+00LBS/SECANDTOTALWTLOSSIS   1.2292E+01LBSANDNOSENADIS 8.0814E-03FT
    OSTARIS 3.7186E+03BTU/LB
                         6400    6400    6400    6400    6400    6400    6400    6400    6400    6400    6400    6400    6400
                         6400    3165    1839    1449    1274    1175    1108    1059    1020     988     961     938     918
                          901     886     874     863     854     846     840     835     831     828     788

   4.1000000E+01     3.3310703E+02     5.5446108E+05    -2.9038547E+03     4.4612753E+03    -2.6882263E+01     5.8435952E+00
                     6.6822230E-02     1.0975483E+04     1.2540935E+05     9.9911585E+00     3.3183417E-02     4.5555993E+08
                     1.1688229E+02     5.9598032E-02     5.1427385E-05     2.7626110E-06     2.5760128E+02     5.1427385E-05
                     1.7645017E+07     2.4276550E+05     1.1220202E+07     4.3322374E+03     2.2827824E-01    -2.3466699E+01
                     3.2449241E+01    -1.0671176E+02     5.4491355E+03     6.5129131E+05     5.1000000E-01     2.3080000E+01
     1.594E-02 2.791E-04 1.003E-02 6.934E-03 6.629E+08
2.082E-03 3.642E-07 9.025E+00 6.103E+02 3.533E-03 1.093E+04 4.822E-05 3.700E+03
    SDOT   9.461E-03   1.243E-02   1.223E-02   1.182E-02   1.134E-02   1.100E-02   1.066E+02   9.031E-03   1.206E-01
                         6760    6760    6760    6760    6760    6760    6760    6400
                         6760    6760    6760    6760    6760    6760    6760    6400
                         1791    4230    4232    3996    3688    3475    3241    5480
                          670     773     779     766     747     734     720    4525
                          572     573     572     571     569     568     567    3681
                          564     562     561     560     559     558     558    2951
                                                                                 1060
                                                                                  860
    WTLOSSRATEIS 1.0871E+00LBS/SECANDTOTALWTLOSSIS   1.3827E+01LBSANDNOSENADIS 1.3385E-02FT
    OSTARIS 3.2808E+03BTU/LB
                         6400    6400    6400    6400    6400    6400    6400    6400    6400    6400    6400    6400    6400
                         6400    6400    3874    2266    1634    1370    1226    1136    1072    1025     988     959     936
                          916     900     886     875     865     857     850     845     841     838     797

   4.1980000E+01     3.4401700E+02     5.6373240E+05    -7.6188187E+03    -3.6507869E+00    -2.7032821E+0[illegible]    5.8126682E+00
                     6.8030337E-02     1.0246162E+04     1.2480186E+05     9.1736265E+00     3.4757131E-02     4.6840857E+08
                     1.1703284E+02     6.0593998E-02     6.0893490E-05    -4.4316915E-06     2.6375898E+02     6.0893490E-05
                     1.7645770E+07     2.4682006E+05     1.1210653E+07     4.5025148E+03     2.6820138E-01    -2.4523572E+01
                     3.2425969E+01    -1.0669863E+02     5.1851546E+03     6.6740303E+05     5.1000000E-01     2.3080000E+01
     1.624E-02 9.324E-05 1.189E-02 6.529E-03 6.751E+08
2.378E-03 3.737E-07 8.383E+00 6.157E+02 3.920E-03 1.020E+04 4.692E-05 4.141E+03
    SDOT   1.078E-02   1.366E-02   1.335E-02   1.283E-02   1.227E-02   1.187E-02   1.149E-02   9.035E-03   1.301E-01
                         6760    6760    6760    6760    6760    6760    6760    6400
                         6760    6760    6760    6760    6760    6760    6760    6246
                         2967    5584    5460    5146    4777    4519    4255    5501
```

```
716     929     931     901     865     840     816     4631
576     583     582     580     578     576     575     3814
566     565     564     563     562     561     561     3081
                                                        1060
                                                         860
WTLOSSRATEIS 8.1076E-01LBS/SECANDTOTALWTLOSSIS   1.4983E+01LBSANDNOSERADIS 7.4638E-03FT
QSTARIS 3.2275E+03BTU/LB
6400    6400    6400    6400    6400    6400    6400    6400    6400    6400    6400    6400    6400
6400    6400    6400    4220    2481    1739    1436    1268    1163    1090    1037    996     964
939     919     902     889     878     869     861     856     851     848     807
```

REFERENCES

1. Six-Degree-of-Freedom Flight-Path Study Generalized Computer Program, FDL-TDR-64-1, Part I, Vol 1, and Part II, Vol I, AF Flight Dynamics Laboratory, October 1963.

2. Dayton, Allen D., Spinning Unguided Rocket Trajectory Digital Computer Program (SPURT), SWC-TDR-63-11, AF Special Weapons Center, February 1963.

3. Krause, H. G. L., Kubler, M. E., Koelle, H. H., Kaeppeler, H. J., The Free Flight Trajectory of Rockets, with Consideration of the Variation of Gravity with Altitude, the Curvature of the Surface of the Earth and the Influences of the Rotation of the Earth and Air Drag, ASTIA doc. AD-86547, Stuttgart, February 1963.

4. Walter, Everett L., Six Variable Ballistic Model for a Rocket, MM445, White Sands Missile Range, New Mexico, June 1962.

5. Lynch, U. H., Six-Degree of Freedom Program, AFWL-TR-66-155, AF Weapons Laboratory, 1966.

6. Hill, Morrissette, A Six-Degree-of-Freedom Reentry Trajectory Program for Ballistic and Lifting Vehicles, RAD-TM-62-7D, AVCO Corp, September 1963.

7. Moulds, W. J., Young, J. D., Capt, USAF, Aerodynamic Heating and Ablation Computer Program (HEATAB), AFWL-TR-66-105, AF Weapons Laboratory, October 1966.

8. Makerson, Baker, Westrom, "Analysis and Standardization of Astrodynamics Constants," Journal of Astronautical Sciences, Vol III, No. 1, Spring 1961.

9. Baker, R. M. L., Makerson, M. W., An Introduction to Astrodynamics, Academic Press, 1963.

10. Herrick, S., Baker, R. M. L., Hilton, "Gravitational and Related Constants for Accurate Space Navigation," UCLA Astronomical Papers, Vol I, No. 24, 1957.

11. Berman, Arthur I., The Physical Principles of Astronautics, John Wiley & Sons, 1961.

12. Herrick, S., Astrodynamics, D. Van Nostrand Co, Inc, 1961.

13. Thomson, William T., Introduction to Space Dynamics, John Wiley & Sons, 1961.

14. Hildebrand, F. B., Introduction to Numerical Analysis, McGraw-Hill Book Co, Inc, p. 237, 1956.

15. Kaye, J., "Survey of Friction Coefficients, Recovery Factors, and Heat Transfer Coefficients for Supersonic Flow," Journal of Aeronautical Sciences, Vol 21, No. 2, pp. 117-129, 1954.

16. Kreith, Frank, Principles of Heat Transfer, International Book Co, 1953.

REFERENCES (cont'd)

17. Rubesin, M. W., Johnson, H. A., Transcript ASME, 71:383, 1949.

18. Kays, W. M., Convective Heat and Mass Transfer, McGraw-Hill Book Co, Inc, 1966.

19. Eckert, E. R. G., Drake, R. M., Jr., Heat and Mass Transfer, McGraw-Hill Book Co, Inc, 1959.

20. Scala, S. M., A Study of Hypersonic Ablation, GE R59SD438, General Electric MSV Dept, 1959.

21. Analytical Comparison of Ablative Nozzle Materials, NASA CR-54257, July 1965.

22. Lees, L., "Laminar Heat Transfer over Blunt-Nosed Bodies at Hypersonic Speed," Jet Propulsion, Vol 26, pp. 259-264, 1956.

23. Schlichting, H., Boundary Layer Theory, McGraw-Hill Book Co, Inc, 1960.

24. Hecht, A., Clarification of Transition Criteria, GE RSD, PIR-HTT-8151-202, General Electric MSV Dept, 1963.

25. Kopal, Z., Tables of Supersonic Flow around Cones, MIT Center of Analysis, TR No. 1, 1947.

26. Young, J. D., Capt, USAF, Aungier, R. H., Lt, USAF, Private Communication, March 1968.

27. Cox, R. N., Crabtree, L. F., Elements of Hypersonic Aerodynamics, Academic Press, 1965.

28. Mangler, W., Compressible Boundary Layers on Bodies of Revolution, ATI No. 28063, MAP-VG 83-4, June 1946.

29. Eckert, E., "Engineering Relations for Heat Transfer and Friction in High Velocity Laminar and Turbulent Flow over Surfaces with Constant Pressure and Temperature," ASME Paper No. 55-A-31.

30. Schmidt, J. F., Laminar Skin-Friction and Heat-Transfer Parameters for a Flat Plate at Hypersonic Speeds in Terms of Free-Stream Flow Properties, NASA TN D-8, 1959.

31. Bertram, M. H., Correlation Graphs for Supersonic Flow around Right Circular Cones at Zero Yaw in Air as a Perfect Gas, NASA TN D-2339.

32. Equations, Tables and Charts for Compressible Flow, by the Ames Research Staff, NASA R1135, 1953.

33. Hoerner, S. F., Fluid-Dynamic Drag, published by author, 1958.

34. Hoak, D. E., Ellison, D. E., USAF Stability and Control Datcom, AF Flight Dynamics Laboratory, November 1965.

REFERENCES (cont'd)

35. Gray, D. J., Drag and Stability Derivatives of Missile Components According to the Modified Newtonian Theory, AEDC TN-60-61, Arnold Engineering Development Center, November 1960.

36. Aungier, R. H., Lt, USAF, Private Communication, March 1968.

DISTRIBUTION

No. cys	
	MAJOR AIR COMMANDS
1	AUL (SE)-67-464, Maxwell AFB, Ala 36112
2	SAAMA (SANEAD, Lt John Taylor), Kelly AFB, Tex 78241
	AFSC ORGANIZATIONS
1	AFSC STLO (SCTL-17, Capt DeLoache), Naval Msl Test Cen, Point Mugu, Calif 93041
	OAR, Holloman AFB, NM 88330
1	(RRRD)
2	(MDST)
1	(MDRCV, Mr. Martin Menk)
	KIRTLAND AFB ORGANIZATIONS
	AFSWC, Kirtland AFB, NM 87117
1	(SWEH)
2	(SWT)
	AFWL, Kirtland AFB, NM 87117
12	(WLIL)
60	(WLDE)
1	(WLRP, Capt James Suttle)
	ARMY ACTIVITIES
2	USA Mob Equip Rsch & Dev Cen (Tech Doc Cen), Ft Belvoir, Va 20260
	NAVY ACTIVITIES
1	Comdr, NWC (Code 753), China Lake, Calif 93557
	Comdr, NOL, White Oak, Silver Spring, Md 20910
1	(Code 730)
3	(Mr. John L. Lankford, Act Chief, Msl Dyn Div)
	OTHER DOD ACTIVITIES
1	Comdr, Fld Comd, DASA (FCAG3), Sandia Base, NM 87115
20	DDC (TCA), Cameron Sta, Alexandria, Va 22314
	AEC ACTIVITIES
	Sandia Corp, Box 5800, Sandia Base, NM 87115
1	(Info Dist Div)
1	(Mr. B. E. Bader, Org 1541-2)
	OTHER
3	NASA-LRC (Mr. Robert Wright), Mail Stop 214A, Langley Sta, Hampton, Va 23365

DISTRIBUTION (cont'd)

No. cys	
1	Aerospace Corp, San Bernardino Opns (A. M. Naqvi), P. O. Box 1308, San Bernardino, Calif 92402
2	Dikewood Corp (Mr. Ed Brannon), 1009 Bradbury Dr SE, Albuquerque, NM 87106
2	Univ New Mexico (Dr. R. C. Dove), Dept Mech Eng, Albuquerque, NM 87103
2	New Mexico State Univ (Dr. C. Q. Ford), Dept Mech Eng, University Park, NM 88001
1	FMC Corp (Mr. D. G. DiCanio), Def Tech Lab, 333 Brokaw Rd, Box 520, Santa Clara, Calif 95052
1	Martin Marietta Corp, Denver Div (Mr. D. A. Schmitt), Mail No. 0409, Denver, Colo 80201
1	NASA, Manned Spacecraft Cen (Mr. D. M. Curry, ES54), Houston, Tex 77058
1	Lovelace Foundation, Biological Instrumentation (Mr. R. Rietz), 5200 Gibson Blvd SE, Albuquerque, NM 87108
1	Emerson Elec Co (Mr. R. Feldman), 8100 Florissant Ave, St Louis, Mo 63136
1	Def Rsch Corp (Mr. R. Boxer), 6300 Hollister Ave, P. O. Box 3587, Santa Barbara, Calif 92105
1	Opns Rsch Inc (Mr. E. Wendorf), 225 Santa Monica Blvd, Santa Monica, Calif 90401
1	Minneapolis-Honeywell (Mr. G. Jacobs), Minneapolis, Minn 55440
1	Westinghouse Corp, Astro-Nuc Lab (Dr. Paul Dixon), P. O. Box 10864, Pittsburgh, Pa 15236
1	Official Record Copy (W. J. Moulds, WLDE)

This page intentionally left blank.

UNCLASSIFIED

Security Classification

DOCUMENT CONTROL DATA - R & D

(Security classification of title, body of abstract and indexing annotation must be entered when the overall report is classified)

1. ORIGINATING ACTIVITY *(Corporate author)* Air Force Weapons Laboratory (WLDE) Kirtland Air Force Base, New Mexico 87117	2a. REPORT SECURITY CLASSIFICATION UNCLASSIFIED 2b. GROUP

3. REPORT TITLE

AN INTEGRATED SIX-DEGREE-OF-FREEDOM TRAJECTORY AND AERODYNAMIC HEATING AND ABLATION COMPUTER PROGRAM (STRAB-6)

4. DESCRIPTIVE NOTES *(Type of report and inclusive dates)*

July 1966-November 1967

5. AUTHOR(S) *(First name, middle initial, last name)*

W. J. Moulds

6. REPORT DATE August 1968	7a. TOTAL NO. OF PAGES 162	7b. NO. OF REFS 36
8a. CONTRACT OR GRANT NO. b. PROJECT NO. 5791 c. Task No. 579122 d.	9a. ORIGINATOR'S REPORT NUMBER(S) AFWL-TR-68-61 9b. OTHER REPORT NO(S) *(Any other numbers that may be assigned this report)*	

10. DISTRIBUTION STATEMENT This document is subject to special export controls and each transmittal to foreign governments or foreign nationals may be made only with prior approval of AFWL (WLDE), Kirtland AFB, NM, 87117. Distribution is limited because of the technology discussed in the report.

11. SUPPLEMENTARY NOTES	12. SPONSORING MILITARY ACTIVITY AFWL (WLDE) Kirtland AFB, NM 87117

13. ABSTRACT

(Distribution Limitation Statement No. 2)

An integrated computer program (STRAB-6) for the complete analysis of a blunt, conical reentry vehicle as to its trajectory and aerothermal environment upon atmospheric reentry is presented. The trajectory portion of the program calculates the vehicle motions in six-degrees-of-freedom, while the thermal portion calculates the aerodynamic heating and ablation of the vehicle. The earth model is an oblate, rotating spheroid whose parameters and gravitational potential are described herein. The equations of motion, the method of integration, thermal model and input forms for the program are discussed. The thermal model examined in this report assumes thick skin solution where the skin is of any composite structure made of discrete layers of material whose properties may vary from layer to layer. Also, the heatshield is comprised of one, two, or more different ablative materials. STRAB-6 computes nose-blunting and includes this effect in the aerodynamics. STRAB-6 is written in FORTRAN IV for the CDC 6600 computer.

DD FORM 1 NOV 65 1473

UNCLASSIFIED

Security Classification

UNCLASSIFIED
Security Classification

14 KEY WORDS	LINK A ROLE	LINK A WT	LINK B ROLE	LINK B WT	LINK C ROLE	LINK C WT
Six-degrees of freedom						
Equations of motion						
Euler angles						
Moment of momentum						
Runge-Kutta						
Aerodynamic heating						
Ablation						
Heat transfer						
Boundary layer						
Hypersonic						
Reentry vehicles						

AFSC (KAFB NM)

UNCLASSIFIED
Security Classification