UNCLASSIFIED

AD NUMBER
AD836521
NEW LIMITATION CHANGE
TO Approved for public release, distribution unlimited
FROM Distribution authorized to U.S. Gov't. agencies and their contractors; Administrative/Operational Use; 13 MAY 1968. Other requests shall be referred to Office of the Assistant Chief of Force Development, Washington, DC 20301.
AUTHORITY
AGO ltr, 29 Apr 1980

THIS PAGE IS UNCLASSIFIED

THIS REPORT HAS BEEN DELIMITED
AND CLEARED FOR PUBLIC RELEASE
UNDER DOD DIRECTIVE 5200.20 AND
NO RESTRICTIONS ARE IMPOSED UPON
ITS USE AND DISCLOSURE.

DISTRIBUTION STATEMENT A

APPROVED FOR PUBLIC RELEASE;
DISTRIBUTION UNLIMITED.

AD 836521

FOR OFFICIAL USE ONLY

DEPARTMENT OF THE ARMY
OFFICE OF THE ADJUTANT GENERAL
WASHINGTON, D.C. 20310

IN REPLY REFER TO
AGAM-P (M) (12 July 68) FOR OT RD 682103 17 July 1968

SUBJECT: Operational Report - Lessons Learned, Headquarters, 97th Military Police Battalion, Period Ending 30 April 1968 (U)

SEE DISTRIBUTION

1. Subject report is forwarded for review and evaluation in accordance with paragraph 5b, AR 525-15. Evaluations and corrective actions should be reported to ACSFOR OT RD, Operational Reports Branch, within 90 days of receipt of covering letter.

2. Information contained in this report is provided to insure appropriate benefits in the future from lessons learned during current operations and may be adapted for use in developing training material.

BY ORDER OF THE SECRETARY OF THE ARMY:

Kenneth G. Wickham

KENNETH G. WICKHAM
Major General, USA
The Adjutant General

1 Incl
as

DISTRIBUTION:
Commending Generals
US Continental Army Command
US Army Combat Developments Command
Commandants
US Army Command and General Staff College
US Army Infantry School
US Army Military Police School

Copies furnished:
Office, Chief of Staff, US Army
Deputy Chiefs of Staff
Chief of Engineers
Chief of Research and Development
Assistant Chiefs of Staff
The Provost Marshal General
Defense Documentation Center
Commanding Officers
US Army Logistics, Doctrine Systems & Readiness Agency
US Army Limited War Laboratory
97th Military Police Battalion

STATEMENT #2 UNCLASSIFIED

This document is subject to special export controls and each transmittal to foreign governments or foreign nationals may be made only with prior approval of ~~the Department of the Army~~ Office of the Assistant Chief of Staff for Force Development, Attn: FOR-OT-RD, Wash, DC 20310

Protective marking cancelled when separated from inclosure.

DDC
RECEIVED
JUL 30 1968
C

FOR OFFICIAL USE ONLY

3

DEPARTMENT OF THE ARMY
HEADQUARTERS 97TH MILITARY POLICE BATTALION
APO US Forces 96312

AVBGP-J 13 May 1968

SUBJECT: Operational Report of 97th Military Police Battalion for Period Ending 30 April 1968, RCS CSFOR-65 (R1)

SEE DISTRIBUTION

1. Section 1, Operations: Significant Activities.

a. Mission: The Commanding Officer, 97th Military Police Battalion, provides Military Police direct support and Provost Marshal type services in II Corps Tactical Zone South to Sub Area Commanders, Tactical Unit Commanders, commanders without Military Police assigned support and others as directed by the Commanding Officer, 16th Military Police Group, utilizing personnel and equipment resources assigned and/or attached to the 97th Military Police Battalion. The missions below are listed in order of priorities used to fulfill commitments assigned to the unit:

(1) Support of tactical operations.

(2) Evacuation of PW and control of PW's in US custody.

(3) Specialized physical security measures critical to accomplishment of combat operations.

(4) Discipline, law and order.

(5) Physical security measures for sensitive installations and classified material.

b. Organization: (See Inclosure 1)

c. Key Personnel Assignments and Departures:

(1) Assignments:

(a) LTC Robert Reinke, Bn CO, 97th MP Bn; PM II CTZ South, 11 March 1968.

(b) 1LT Jerome S. McAfee, D/51st Inf, 1 March 1968.

(c) 1LT Jeffrey W. Milson, D/51st Inf, 23 March 1968.

FOR OT RD 682103

(d) 1LT Ernest J. Wallace Jr, C/54th Inf, 1 April 1968.

4

AVBGF-J 13 May 1968
SUBJECT: Operational Report of 97th Military Police Battalion for Period Ending 30 April 1968, RCS CSFOR-65 (R1)

(e) 1LT Gregory M. Dunn, Asst S-2/3, 24 April 1968.

(f) 2LT Dwight E. Rottenberg, C/54th Inf, 15 February 1968.

(g) E8/1SG Edward F. Smith, 630th MP Co, 23 February 1968.

(2) Departures:

(a) LTC William C. DeLapp III, CO 97th MP Bn, PM II CTZ South, deceased, 8 March 1968.

(b) LTC Ernest E. Talbot, CO 178th MP Det (PM), to Ft Meyer, Virginia.

(c) MAJ John J. Flood, PM CRBSAC, to PM Hue-Phu Bai, RVN.

(d) 1LT Juergen H. Parpart, Asst S-2/3, to USATC, Ft Lewis, Washington.

(e) 1LT William S. Strong, D/51st Inf, to Ft Hood, Texas.

(f) 1LT Richard A. O'Neill, 218th MP Co, to Co B, 504th MP Bn.

(g) 1LT William J. Janous, C/54th Inf, to Infantry School, Ft Benning, Georgia.

(h) 1LT Louis Cook, D/51st Inf, to Ft Carson, Colorado.

(i) 1LT Robert Roundsaville, C/54th Inf, to 1st Cav Division.

(j) E8/1SG Tommy Reasons, 218th MP Co, Medevac to CONUS.

(k) E8/1SG John McSparron, C/54th Inf, to ETS.

d. Personnel, Morale and Welfare:

(1) The average daily strength during February was 686, March 675, and April 651. This compares with an authorized total strength of 693 officers, NCO's and EM.

(2) Morale remains high as evidenced by 17 voluntary extensions of overseas tours.

(3) Participation in Savings Bond Program is 81% and Soldier's and Sailor's Deposit 36%.

AVBGF-J 13 May 1968

SUBJECT: Operational Report of 97th Military Police Battalion for Period Ending 30 April 1968, RCS CSFOR-65 (R1)

5

(4) Awards and Decorations:

(a) Silver Star: 2

(b) Bronze Star (Valor): 6

(c) Bronze Star (Merit): 12

(d) Army Commendation Medal w/"V" Device: 2

(e) Army Commendation Medal (Merit): 27

(f) Purple Heart: 11

(g) 18th MP Bde Certificate of Achievement: 30

(5) Disciplinary Action:

(a) Special Courts Martial: 2

(b) Summary Courts Martial: 4

(c) Article 15: 66

(6) All R&R allocations received during the reporting period were utilized.

(7) Civic Action:

(a) The major effort of the Battalion's Civic Action Program during the reporting period has been directed towards aid to refugees and victims of the "TET" aggression. During this period the following was donated:

1. 720 pounds of foodstuffs to orphanages at Ba Ngoi and Phan Rang, consisting of cereal, flour, fruit, potatoes, rice, cake, and candy.

2. $15,962 VN contributed to the Cam Ranh Bay "TET" Relief Fund. Money was obtained through voluntary contributions from members of the Battalion.

3. 300 pounds of soap and comfort items, i.e., clothing, etc., was contributed to Tan An Hamlet near Phan Rang by members of the Battalion.

4. Ninety (90) gallons of gasoline, fifty-five (55) gallons diesel and fifty-five (55) gallons of oil and lubricants were contributed to National Police during the "TET" period.

6

AVBGF-J 13 May 1968
SUBJECT: Operational Report of 97th Military Police Battalion for Period Ending 30 April 1968, RCS CSFOR-65 (R1)

(b) The 218th Military Police Company requested and received two single National Policemen to live with the unit at Camp McDermott, Nha Trang. These policemen live and work with the Military Police, and their presence and friendship with the men of the 218th MP Company will make a lasting contribution to US/VN relationships.

(8) Self-Help:

(a) Complete renovation and painting of the Battalion Headquarters was completed on 4 April 1968.

(b) Company supply rooms were removed from troop billets and placed in Wabtoc tents to provide more living space for the men. Unit arms rooms were constructed in the orderly room quonsets to provide better security for weapons and add additional troop living space in the barracks areas where the arms rooms were formerly located.

(c) Unit day rooms were remodled and partitioned to provide separate TV, Writing and Game Rooms.

(d) Work was started to remodel a quonset hut located across from Battalion Headquarters into a BOQ for company commanders and staff. The centralized BOQ at Cam Ranh Bay is located too great a distance from the Battalion area to allow rapid response by the commanders and staff in emergency situations. The quartering of commanders and staff in the Battalion area will decrease the reaction time of units of the Battalion located at Cam Ranh Bay.

e. Intelligence and Counter-Intelligence:

(1) Counter-intelligence inspections were conducted at this headquarters and at all of its subordinate units during the reporting period.

(2) No administrative security violations occurred within this headquarters.

(3) Intelligence Spot Reports processed: 92

(4) Security Actions processed:

(a) Secret clearances validated: 0

(b) Confidential clearances granted: 4

(c) Crypto Access clearances granted: 5

(d) Requests for clearance initiated: 11

AVBGF-J 13 May 1968
SUBJECT: Operational Report of 97th Military Police Battalion for Period Ending 30 April 1968, RCS CSFOR-65 (R1)

(5) Intelligence is collected from the following sources:

(a) Intelligence Spot Reports from subordinate units.

(b) Intelligence Summaries from higher headquarters.

(c) MACV Advisor Teams on QL #1 from Phan Rang to Phu Hiep.

(d) Weekly intelligence briefing conducted by Cam Ranh Bay Support Command.

f. Plans, Operations and Training:

(1) This Battalion was engaged in nine (9) days of combat operations during the period 31 January to 8 February 1968 and was engaged in eighty-one (81) days of normal operations and training. Zero days movement was experienced by this headquarters.

(a) During the period 29 January to 8 February 1968 elements of the 97th Military Police Battalion participated in combat actions during the "TET" aggression (See Inclosure 2).

(b) The 218th Military Police Company moved its headquarters and two platoons to Nha Trang to replace A/504th MP Bn on 29 February 1968. One squad, 218th MP Co, stationed in Dalat, and one squad, 218th MP Co, stationed in Ban Me Thout, were withdrawn from those locations on 29 February 1968 and 14 March 1968, respectively, to join company headquarters in Nha Trang. One platoon from 218th MP Co assumed the mission of one platoon A/504th MP Bn in Phu Hiep on 1 April 1968.

(c) The 630th Military Police Company assumed the responsibility to furnish one squad of Military Police at Dalat to replace the squad of the 218th MP Co which was withdrawn. Squad of 218th MP Company in Ban Me Thout was replaced by a squad from B/504th MP Bn in a realignment of Battalion areas of responsibility. The 504th MP Bn assumed responsibility for the west and northwest protions of II CTZ, and the 97th MP Bn assumed responsibility for the south and southeast portions of II CTZ.

(d) The Battalion utilized five (5) armored 1/4 ton trucks and fifteen (15) men to assist convoys resupplying Ban Me Thout from 17 to 23 February and 15 to 23 March 1968. These convoys were combined ventures held in conjunction with the opening of QL #21 by ROK and ARVN Forces. The Battalion supplied four (4) armored jeeps per convoy and one (1) armored jeep at Duc My for traffic control during entire operating periods.

8

AVBGF-J 13 May 1968
SUBJECT: Operational Report of 97th Military Police Battalion for Period Ending 30 April 1968, RCS CSFOR-65 (R1)

(e) On 19 February 1968 the 178th Military Police Detachment was assigned to the 97th Military Police Battalion. The Battalion Commander of the 97th MP Bn thus became the Commanding Officer of the 178th MP Det and Provost Marshal of II CTZ South. The principle advantage of the Commander/Provost Marshal concept lies in the opportunity for the Commander to control all available resources. These resources may then be employed according to deduced and/or established priorities that provide the best organization of Military Police services for the command. This concept enables the rapid shift of resources to meet local emergencies and requirements on a selective and priority basis, thus providing for a timely, maximum Military Police effort at critical locations. In this connection, a major function is the close and continuous liaison with supported commanders, installations and activities.

(f) LTC William C. DeLapp III, Battalion Commander/Provost Marshal, II CTZ South, was killed on 8 March 1968 in Phu Hiep, while on an inspection tour in his capacity as Provost Marshal, II CTZ South. LTC DeLapp was observing 81mm mortar fire directed at suspected enemy elements by the 5/27th Artillery, Phu Hiep. Three rounds were fired - one illuminating round and two rounds to settle the base plate of the mortar. The third round landed 520 meters short of the target area, striking near the vicinity of LTC DeLapp, LTC House (5/27th Arty) and CW Bogucki (5/27th Arty). LTC DeLapp was pronounced dead at the 91st Evac Hospital (SMBC), Tuy Hoa, as a result of schrapnel wounds to the neck.

LTC Robert Reinke assumed command of the 97th Military Police Battalion on 11 March 1968.

(g) On 8 April 1968 one squad of Military Policemen from the 218th Military Police Company participated in a combined cordon and search operation in Phu Hiep. This move was implemented to reduce black marketing and to detain suspected Viet Cong in the area. In addition to being a physical measure taken against black marketeers and Viet Cong, the operation had a psychological impact on the local population, demonstrating US/VN cooperation and interest in the security of Phu Hiep.

(h) The 630th Military Police Company provided an additional four (4) MP's and two (2) vehicles for security at the opening of My Ca Bridge on 17 April 1968.

(i) On 25 April 1968 a warning order was received to move one platoon of C/54th Infantry to assume responsibility for the Ammunition Supply Point in Pleiku. The platoon closed in Pleiku at 2230 hrs, 27 April 1968. The platoon is attached to Company B, 504th MP Bn for administrative and logistical support.

9

AVBGF-J 13 May 1968

SUBJECT: Operational Report of 97th Military Police Battalion for Period Ending 30 April 1968, RCS CSFOR-65 (R1)

(j) During the reporting period the Battalion sustained two operational fatalities. PFC Nagy was killed when a command detonated mine was exploded under the convoy escort vehicle he was driving. PFC Nagy was killed instantly, with the other two personnel in the vehicle receiving third degree burns over 35 per cent of their bodies. PFC Cafrelli was killed on a routine patrol when his vehicle overturned at Cam Ranh Bay.

(2) Serious Incidents Reports processed: 223

(3) Convoys Escorted: 85

(a) Number of MP man-days expended: 1236

(b) Average number of km's per convoy: 318

(c) Average number of MP vehicles used: 2.13

(4) Detainees and PW's Escorted:

(a) Number of detainees processed: 108

(b) Number of PW's evacuated: 54

(c) Number of man-days utilized in PW escorts: 84

(5) Number of joint patrols and checkpoints in operation: 24

g. Communications Activities:

(1) Number of messages processed: 108

(2) On 5 March 1968 the 69th Signal Battalion, from whom the 97th MP Bn had hand receipted its RTT, requested and obtained the return of their ANGR/46. On 20 March 1968 the 97th MP Bn was hand receipted an ANGR/46 from Cam Ranh Bay Depot to replace the RTT that was returned to the 69th Signal Battalion.

h. Logistics and Maintenance: Total equipment mileage for reporting period was 450,332 miles.

10

AVBGF-J 19 May 1968

SUBJECT: Operational Report of 97th Military Police Battalion for Period Ending 30 April 1968, RCS CSFOR-65 (R1)

2. Section 2, Lessons Learned: Commander's Observations, Evaluations, and Recommendations.

a. Personnel: None

b. Operations:

(1) Communications with Convoy Escorts

(a) OBSERVATION. Because of the excessive distances involved, Battalion Headquarters cannot maintain communications with units escorting convoys. The average one way distance traveled on convoy escorts is 156 km (318 km round trip), which is well beyond the range of the radios assigned to the Battalion. Current procedure is that the Military Police escort will be provided the frequency and call signs by the unit being supported. Because of the number of convoys the Battalion escorts, it is normal to have three different convoy escorts operating at the same time on three frequencies and an equal number of call signs. After departure from the home station, all communications between Battalion Headquarters and the escort is lost.

(b) EVALUATION. Convoys operating on QL 1, 11 and 21 are within operating radio range with MACV Advisor teams stationed along their routes. Though each sector operates on a different frequency, the teams are able to communicate with their adjacent sectors. The obtaining of the frequencies of the MACV Teams allows communications through relay throughout II Corps Tactical Zone that can be used by MP's on convoy escort duty. Contact has been made by the 97th MP Bn with the Advisor Teams, and frequencies have been exchanged between the advisors and the Military Police, allowing communications along the convoy routes in the event of any emergency or hostile action.

(c) RECOMMENDATION. Recommend that units conducting similar type operations contact MACV Advisor Teams along their frequently traveled routes and establish a rapport with those teams. Each patrol and convoy escort should have available to it the frequencies and call signs of dust off, gun ships, area PM's and all MACV Advisor Teams located within their areas of operations.

(2) Utilization of Personnel in 11B MOS in MP Battalions

(a) OBSERVATION. Infantrymen assigned to the Battalion are secured primarily from hospital channels after having served in an infantry

line unit. These personnel must perform static security duty, which has little relationship to their former duties and requirements. The maintenance of high morale under these circumstances is extremely difficult, since the men feel that the standards of a spit and polish combat support branch (Military Police) are being imposed on infantrymen, whom are combat troops. This, added to the fact that they feel that the MP's get the glamourous jobs while they work the dull, monotonous stationary guard posts, adds to the resentment of the infantryman.

(b) EVALUATION. A successful attempt has been made to integrate the infantrymen of the Battalion with the Military Policemen on as many occasions as possible. The vehicle used to effect this approach is convoy escorts. Infantrymen are employed as machine gunners on convoy escorts at every opportunity. The results of this program have been three-fold. First, the infantrymen are working with the Military Police, which develops comradeship between members of two dissimilar units working together for a common goal. Secondly, infantrymen are eager to volunteer as gunners on convoys and do so at every opportunity. Lastly, the utilization of two infantrymen and four MP's on the average escort makes additional Military Policemen available to perform on special commitments and those commitments that security guards are unable to perform.

(c) RECOMMENDATION. Recommend that other units experiencing the condition as expressed above consider integration of Infantry personnel into activities which would allow them to work closer with the Military Police.

(3) Additional Armor Plating for 1/4 Ton Trucks

(a) OBSERVATION. This organization has experienced difficulty in securing armor kits to harden its 1/4 ton trucks that are used on convoy escorts and highway patrols. While kits may be fabricated from 2 1/2 ton truck hardening kits, several areas of the truck are left exposed, the most notable of which is the gas tank. Explosion of a command detonated mine under the gas tank will cause the gas tank to rupture and the gas to burn, as occurred to a truck of this Battalion on 22 March 1968, resulting in one man killed and two men receiving third degree burns over 35% of their bodies.

(b) EVALUATION. Bolting of a piece of armor plating to the fender carriage of the vehicle will deflect the blast away from the gas tank and absorb the majority of the heat that accompanies the blast. Though the blast will sear the bolts on the plating, the presence of the plating will greatly reduce the probability of a fire and absorb the majority of the blast and schrapnel.

AVBGF-J 13 May 1968

SUBJECT: Operational Report of 97th Military Police Battalion for Period Ending 30 April 1968, RCS CSFOR-65 (R1)

(c) RECOMMENDATION. Recommend that additional armor plating be added under the gas tank. Additional locations for placement of armor plating are the back of the driver and passenger seats and the passenger floor board.

c. Training: None

d. Intelligence: None

e. Logistics: None

f. Organization: None

ROBERT REINKE
LTC, MPC
Commanding

2 Incl
1. Organizational Chart
2. TET Hostilities

DISTRIBUTION:

2 - Commander in Chief, United States Army, Pacific, ATTN: GPOP-DT, APO 96558
3 - Commanding General, United States Army, Vietnam, ATTN: AVHGC-DST, APO 96375
5 - Commanding Officer, 16th Military Police Group, ATTN: AVBGF-B, APO 96240

13

AVBGF (15 May 68) 1st Ind
SUBJECT: Operational Reports - Lessons Learned for the Quarterly Period Ending 30 April 1968, RCS CSFOR-65 (97th MP Bn, W-FNV-AA)

DA, Headquarters, 16th Military Police Group, APO 96240

TO: Assistant Chief of Staff for Force Development, Department of the Army, (ACSFOR, DA), Washington, D.C. 20310
Commanding General, 18th Military Police Brigade, ATTN: AVBGC, APO 96491

1. (U) The Operational Reports for the Quarterly Period Ending 30 April 1968, from the 97th Military Police Battalion, APO 96312, is inclosed.

2. (FOUO) This command considers the report adequate. The following comments refer to parts of the report as indicated:

a. This headquarters concurs with the observation, evaluation and recommendation made in Section 2, para b (1). All elements of the command have implemented the recommendation of the 97th Military Police Battalion. As a result, military police patrols and convoy escorts have increased their capability in providing responsive support to the highway user.

b. This headquarters concurs with the observation, evaluation and recommendation made in Section 2, para b (2). The utilization of assigned infantry personnel on convoy duty serves as a field expedient measure which can be utilized to overcome a shortage of military policemen. This measure serves to give a battalion of this type a greater degree of flexibility with respect to its resources. The 97th Military Police Battalion, with its two military police companies, is restricted in its military police resources. This command has given the 97th Military Police Battalion permission to fill the machine gunner position on convoy escorts with their assigned infantry personnel.

c. This command concurs with the observation, evaluation and recommendation made in Section 2, para b (3). The 97th Military Police Battalion is currently modifying existing armored ¼ ton trucks as recommended. In addition, this modification program has been expanded to include all elements of this command. The use of armored ¼ ton trucks is an interim measure pending issue to the 18th Military Police Brigade of the V-100 armored car which has been proven in the field far superior to the armored ¼ ton truck.

John D. Shanklin
JOHN D. SHANKLIN
Colonel, MPC
Commanding

DISTRIBUTION:
2 cy - ACSFOR, DA
1 cy - CG, 18th MP Bde

11

14

AVBGC (13 May 68) 2nd Ind
SUBJECT: Operational Report - Lessons Learned for the Quarterly Period Ending 30 April 1968, RCS CSFOR - 65 (R1)

DA, HEADQUARTERS, 18TH MILITARY POLICE BRIGADE, APO 96491 12 JUN 1968

TO: Commanding General, United States Army Vietnam, ATTN: AVHGC-DST, APO 96375

1. Reference item concerning communications with convoy escorts, Section II, page 8 and para 2a, 1st Ind: Concur with recommendation and 1st Ind. This information will be furnished to subordinate units of this command.

2. Reference item concerning utilization of personnel in 11B MOS in Military Police Battalions, Section II, page 8 and para 2b, 1st Ind: Concur with recommendation and 1st Ind. This information will be forwarded to other battalions assigned infantry companies.

3. Reference item concerning additional armor plating for ¾ ton truck, Section II, page 9 and para 2c, 1st Ind: Concur with recommendation and 1st Ind. The MTOE Standardization submitted to USARV, 19 Oct 67, included 18 19-370 MP Companies. Also, 18 armor kits (¾ ton trucks) were requested for each of these companies.

FOR THE COMMANDER:

J. W. MITCHELL
CPT, AGC
Asst Adjutant

15

AVHGC-DST (13 May 68) 3d Ind CPT Arnold/hga/LBN 4485
SUBJECT: Operational Report of 97th Military Police Battalion for Period Ending 30 April 1968, RCS CSFOR-65 (R1) .

HEADQUARTERS, UNITED STATES ARMY, VIETNAM, APO San Francisco 96375 14 JUN 1968

TO: Commander in Chief, United States Army, Pacific, ATTN: GPOP-DT, APO 96558

1. This headquarters has reviewed the Operational Report-Lessons Learned for the quarterly period ending 30 April 1968 from Headquarters, 97th Military Police Battalion as indorsed.

2. Concur with report as submitted.

FOR THE COMMANDER:

JOHN V. GETCHELL
Captain, AGC
Assistant Adjutant General

Copy furnished:
HQ, 18th MP Bde
HQ, 97th MP Bn

16

GPOP-DT (13 May 68) 4th Ind
SUBJECT: Operational Report of HQ, 97th MP Bn for Period Ending 30 April 1968, RCS CSFOR-65 (R1)

HQ, US Army, Pacific, APO San Francisco 96558 27 JUN 1968

TO: Assistant Chief of Staff for Force Development, Department of the Army, Washington, D. C. 20310

This headquarters has evaluated subject report and forwarding indorsements and concurs in the report as indorsed.

FOR THE COMMANDER IN CHIEF:

C.L. SHORTT
CPT, AGC
Asst AG

Incl. 1

FOR OFFICIAL USE ONLY

ORGANIZATION AND LOCATION OF UNITS OF 97TH MP BN

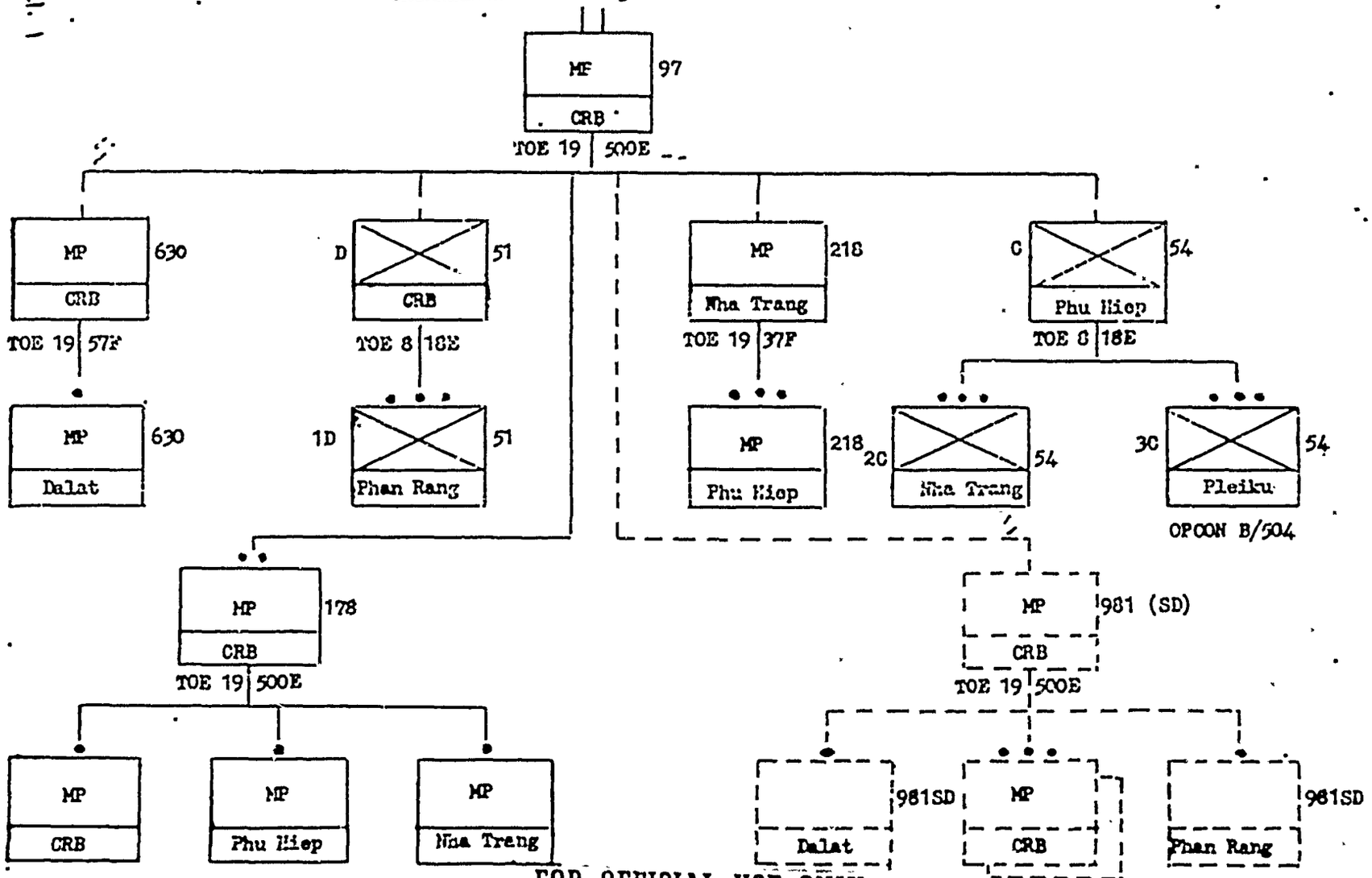

FOR OFFICIAL USE ONLY

TET HOSTILITIES

18

1. CAM RANH BAY: At 0230 hrs, 30 January 1968, information was received that the air base at Dong Ba Thin was under mortar attack. All posts operating on the mainland were reinforced with additional personnel and automatic weapons. At 0530 hrs this headquarters was notified that there was fighting in Nha Trang and throughout the major cities of South Vietnam. A request for additional ammunition was received from CPT Hadlock, Co A, 504th MP Bn at 0930 hrs. At 0945 hrs MAJ MacDonnell (S-3, 16th MP Gp) notified this headquarters to have the 218th MP Co assemble one platoon with combat equipment for movement to Nha Trang, on order of Commanding Officer, 16th MP Group. LT Blankenship (CO, 218th MP Co) and one platoon of the 218th MP Co was airlifted in serial to Nha Trang with the additional ammunition requested by Co A, 504th MP Bn. At 1700 hrs this headquarters received a report from Dalat that all was quiet. At 0500 hrs 31 January 1968 a reported squad of VC had landed at Cam Ranh Bay and was occupying caves near Alaska Barge and Transport Co. A platoon of Infantry and MP was dispatched under the command of LT Cook, D/51st Infantry. A twelve hour search of the area met with negative results. At 1300 hrs three armored jeeps were dispatched to Cam Ranh City to operate road blocks with National Police and ARVN Forces.

In the early morning of 3 February 1968, the Military Police security guard at the transformer site spotted a swimmer coming ashore near his post. The swimmer disappeared into a rocky grove, and a search of the area met with negative results.

At 0330 hrs, SP4 Kover, Dalat Detachment, notified the Battalion that the Dalat Detachment was under attack from heavy automatic weapons fire and that they had notified MACV.

On 3 February 1968 a request was received from the MP Detachment in Dalat and from 16th Military Police Group in Nha Trang for ammunition - 10,000 rds 7.62 and 300 rds 40mm were sent to Dalat; 24,000 rds 7.62 link, 44,000 rds 7.62, 720 rds 40mm, 200 M-26 grenades, and 360 White Star Clusters were sent to Nha Trang. At 1700 hrs 3 February 1968, this headquarters received a request from the mayor of Cam Ranh Village for four (4) two man patrols to work with National Police. The Battalion was able to provide two of the patrols requested.

On 4 February 1968 two men and 10,000 rds 7.62 were sent to Dalat to replace the casualties and supplies lost or expended by the squad in Dalat.

2. NHA TRANG: On 29 January 1968, at approximately 1400 hrs, information was received from intelligence sources that a large enemy force was expected to move on the city of Nha Trang later that night. This information was apparently received from a reliable source in or near the city of Nha Trang. During the afternoon and evening of 29 January 1968, elements of the enemy force apparently infiltrated into the city, but no

19

action was observed through 2400 hrs that day. At approximately 0100 hrs 30 January 1968, the central Canh Sat headquarters located in Canh Sat Circle in downtown Nha Trang was taken under fire by an undetermined number of enemy. During this fire fight, two MP patrols consisting of eight men on regular patrol went to the assistance of the Canh Sats and at the completion of the fire fight, three enemy were known dead and an undetermined number had escaped the scene. From this point until approximately 0400 hrs, numerous sniping incidents took place throughout the city, mainly centered in or around the train depot, main bus station, and at several of the convents throughout Nha Trang. During the period of those sporadic incidents, a large enemy force consisting of thirty to forty NVA and Viet Cong made a major attack on Roberts Compound and the compound of the 272d MP Company across the street from Roberts Compound. From 0245 hrs until 0730 hrs the 272d MP Co was able to hold off the enemy without assistance. After receiving several casualties, the unit was subsequently pinned down behind a concrete wall at the front of the compound by fire from enemy located in a house across the street. Part of the enemy force was successful in infiltrating the compound. Assistance was called for to repel the enemy and was answered by members of the 504th MP Bn, Co A, and 218th MP Co personnel who were at that time scattered throughout the city. On arrival of supporting units, the enemy's location was taken under fire. Supporting units arrived at approximately 0800 hrs, and at approximately 1030 hrs, after a heavy fire fight, the enemy force was silenced. Observation showed eighteen enemy had been killed, five wounded, and seven taken prisoner. Several small arms, grenades, automatic weapons and satchel charges were confiscated. Almost immediately after leaving the scene of this incident a call was received that the Canh Sat headquarters had again been taken under fire by enemy forces. Three MP patrols consisting of twelve men answered the call for assistance, and upon arrival at the scene, gave assistance in the fire fight which resulted in three enemy killed.

On 30 January 1968 at approximately 1230 hrs a platoon of MP's from the 218th MP Co, Cam Ranh Bay, arrived on orders from 16th MP Gp, to reinforce the MP units already in Nha Trang. This platoon was met at the air base and given transportation to Camp McDermott, at which time they were billeted in the transient barracks operated by the 54th Support Company. For the remainder of the day until 1800 hrs sporadic sniper fire was reported throughout the city, and was responded to by various MP units.

At 1800 hrs 30 January 1968, 20 personnel from the 2d platoon, 218th MP Co, were sent to the PMO to provide security. An additional 10 personnel were sent to the King Duy Tan Hotel as security. At approximately 0100 hrs 31 January 1968, the personnel at the King Duy Tan Hotel came under fire from an unknown sized enemy force located in a convent adjacent to the hotel. At the same time additional enemy fire was received from the beach on the opposite side of the road. The enemy force was

taken under fire, but no determination could be made as to enemy casualties. During the fire fight, one MP was wounded and evacuated to the 8th Field Hospital, Nha Trang, by ambulance. For the remaining hours of darkness both the PMO and the King Duy Tan Hotel received sporadic sniper fire which was returned when possible. No further casualties were sustained by friendly forces. Enemy casualties were unknown. At approximately 0600 hrs 31 January 1968 ARVN were moved into the city to establish martial law. MP units in Nha Trang continued the responsibility of safeguarding the PMO, King Duy Tan Hotel, and other compounds occupied by US Forces.

3. DALAT: At approximately 0130 hrs 30 January 1968 Military Policemen heard gunfire coming from the rear of their villa. All personnel assumed defensive positions and at 0200 hrs they were attacked by an estimated company of Viet Cong. SGT Corser, NCOIC of the detachment, called MACV to advise them they were under attack. He was informed that no assistance was available. Military Policemen continued to hold off the Viet Cong advance from 0200 hrs until 0630 hrs when SGT Corser made a net radio call for assistance. At 0730 hrs a reaction force from the 362d Signal Company arrived and assisted the MP's in the evacuation of the villa. During the five hour fire fight the Military Police were subject to automatic weapons fire and rocket fire. One rocket round hit the second floor bathroom, resulting in three men wounded (two men from the 218th MP Co and one man from the 981st MP Co (SD)).

After evacuating their wounded, the Military Police provided security for the US Army Dispensary at Dalat and escorted ambulances from the dispensary to the helipad near the 362d Signal Company.

It was while escorting an ambulance that SGT Corser was wounded on 5 February 1968. Estimated enemy casualties inflicted by Dalat Military Police Detachment: 40 enemy KIA; unknown enemy WIA.

Security Classification

2

DOCUMENT CONTROL DATA - R & D

(Security classification of title, body of abstract and indexing annotation must be entered when the overall report is classified)

1. ORIGINATING ACTIVITY *(Corporate author)* OACSFOR, DA, Washington, D.C. 20310	2a. REPORT SECURITY CLASSIFICATION For Official Use Only
	2b. GROUP

3. REPORT TITLE

Operational Report - Lessons Learned, Headquarters, 97th Military Police Battalion

4. DESCRIPTIVE NOTES *(Type of report and inclusive dates)*

Experiences of unit engaged in counterinsurgency operations. 1 Feb - 30 April 1968

5. AUTHOR(S) *(First name, middle initial, last name)*

CO, 97th Military Police Battalion

6. REPORT DATE 13 May 1968	7a. TOTAL NO. OF PAGES 19	7b. NO. OF REFS
8a. CONTRACT OR GRANT NO.	9a. ORIGINATOR'S REPORT NUMBER(S) 682103	
b. PROJECT NO. N/A		
c.	9b. OTHER REPORT NO(S) *(Any other numbers that may be assigned this report)*	
d.		

10. DISTRIBUTION STATEMENT

11. SUPPLEMENTARY NOTES N/A	12. SPONSORING MILITARY ACTIVITY OACSFOR, DA, Washington, D.C. 20310

13. ABSTRACT

DD FORM 1 NOV 65 1473

UNCLASSIFIED

Security Classification