UNCLASSIFIED

AD NUMBER

AD829047

NEW LIMITATION CHANGE

TO

Approved for public release, distribution unlimited

FROM

Distribution authorized to U.S. Gov't. agencies and their contractors; Administrative/Operational Use; 6 Jun 1960. Other request to the Space and Missile Systems Organization, Los Angeles, CA.

AUTHORITY

SAMSO USAF ltr, 28 Feb 1972

THIS PAGE IS UNCLASSIFIED

CONVAIR-ASTRONAUTICS

A DIVISION OF GENERAL DYNAMICS CORPORATION

AD 829047

Best Available Copy

CONFIDENTIAL

CONFIDENTIAL

REPORT NO. AE60-0576
DATE 6-6-60
NO. OF PAGES 21

CONVAIR ASTRONAUTICS

CONVAIR DIVISION OF GENERAL DYNAMICS CORPORATION

SYSTEM DESCRIPTION - ABORT SENSING AND IMPLEMENTATION SYSTEM FOR PROJECT MERCURY

GENERAL DYNAMICS ASTRONAUTICS
APR 10 1963
LIBRARY

Classification Changed To UNCLASSIFIED
Authorized By: DD 254 Sec. SLD3 Date 11-64
Reclassified By: Dept. Date 4-14-65
R. Clark BI-1

27-01372
Sub-sys spec for ASIS, Proj. Hgr

PREPARED BY N.E. LaMotte
K.E. LaMotte, Electronic Eng'r.

CHECKED BY R.W. Schaelchlin
R.W. Schaelchlin, Lead Eng'r.

APPROVED BY C.E. Wilson
C.E. Wilson, Design Group Eng'r.

APPROVED BY P.E. Culbertson
P. E. Culbertson, Project Eng'r.

This document is subject to special export controls and each transmittal to foreign governments or foreign nationals may be made only with prior approval of: Mq.SAMSO, LA., Ca. 90045 Attn: SMSO

REVISIONS

Best Available Copy

TABLE OF CONTENTS

		PAGE
I.	INTRODUCTION:	1.
II.	DESCRIPTION OF ASIS SEQUENTIAL OPERATIONS:	3.
	1. Test Conductor Abort Command	3.
	2. ASIS Pre-Launch Ready - Release Interlock	3.
	3. ASIS In-flight Abort Commands	4.
	4. Emergency Atlas Engine Cutoff	4.
	5. ASIS Booster Engine Cut-Off and Staging Sequence	5.
	6. ASIS Sustainer Cut-Off Sequence	5.
	7. Range Safety Engine Cut-Off and Destruct	5.
III.	ASIS/ATLAS SYSTEM PARAMETERS:	7.
	1. Flight Control System (a) Pitch, Yaw and Roll Rates	7.
	2. Tank Pressurization (a) Liquid Oxygen Tank Pressure (b) Liquid Oxygen Tank/Fuel Tank Differential Pressure	8.
	3. Propulsion System (a) Fuel Injection Manifold Pressures	9.
	4. Hydraulic System (a) Sustainer Hydraulic Pressure	9.
	5. Electrical System (a) 115 volt, 400 cps Voltage (b) Atlas/Capsule Interface Continuity	10.

Best Available Copy

IV. DETAIL AND FUNCTIONAL COMPONENT DESCRIPTIONS: 11.

1. ASIS Magnetic Logic Units and Connectors 12.
2. ASIS Gyro Over/Rate Detectors and Connections 13.
3. ASIS Pressure Switches, Connections and Excitations 15.
4. AC Undervoltage 15.

APPENDIX

TABLE I. Table of Parameters 17.

FIGURE 1. Schematic Diagram - ASIS System 18.

FIGURE 2. Block Diagram of Gyro Over/Rate Detector 19.

FIGURE 3. Transition Control Characteristic of Magnetic Amplifier Comparator 20.

FIGURE 4. Transition Control Characteristic of 1 and 2 - NOR Amplifiers 21.

Best Available Copy

I. INTRODUCTION:

Project Mercury is a National Aeronautics and Space Administration (NASA) Project aimed primarily at developing and evaluating a capsule in which a man can successfully orbit the earth, re-enter the atmosphere, and accomplish a safe descent to the earth's surface.

The Atlas portion of Project Mercury is a program in which continual progressive achievements are planned, starting with instrumented boosters, unmanned and manned capsules launched into sub-orbital trajectories, and culminating in a series of orbital flights and safe landings of manned capsules. The Atlas Mercury booster is a basic "D" series Atlas Missile with certain minor changes to enhance its operation in the Mercury program. The most significant change to the Atlas is the addition of the Abort Sensing and Implementation System (ASIS) for added Astronaut Safety.

The ASIS is a highly reliable system for sensing the development of any possible catastrophic failure of the Mercury Atlas Booster and generating an "Abort Command" to activate the Mercury Capsule escape system prior to the time the capsule occupant might be placed in jeopardy.

No automatic blockhouse initiated Abort Commands are expected to be necessary for activation of the capsule escape system during pre-launch times because of the time allowable for decision and the availability of certain ground emergency capabilities. During capsule boost, however, an automatic detection system is necessary because the time between certain capsule-booster malfunctions and booster vehicle break-up can be shorter than human decisive action. Essentially, the ASIS monitors selected critical parameters in the in-flight Atlas operation; and if conditions warrant, a command directing mission abort will be initiated at such an early time that capsule escape can be effected prior to the development of a condition which would be hazardous to the Astronaut. A manual abort facility is included in the MC DONNELL capsule to allow an Astronaut initiated escape sequence if conditions appear to warrant such a decision.

An additional prime requirement for the ASIS is that it must not prevent successful completion of the Mercury mission either by an inadvertant Abort Command due to ASIS component failure or by marginal operation of Atlas subsystems.

The diverse reliability requirements of ASIS positive sensing of hazardous conditions and minimizing the possibility of unnecessary Abort Commands have been satisfied by:

(1) Careful selection of a minimum number of the abort

This document contains information affecting the national defense of the United States within the meaning of the Espionage Laws, Title 18 U.S. Code, Sections 793 and 794. The transmission or the revelation of its contents in any manner to an unauthorized person is prohibited by law.

parameters and tolerances after an extensive study of possible missile systems malfunctions and review of data from all missile captive and flight tests to date.

(2) Circuit design to provide redundancy based on the most likely failure mode of the individual components of the ASIS.

The ASIS is designed to monitor the overall Atlas flight performance through selected points in five missile subsystems as follows:

(1) Flight Control System
  (a) Pitch, Yaw and Roll Rates

(2) Tank Pressurization System
  (a) Liquid Oxygen Tank Pressure
  (b) Differential Pressure between Liquid Oxygen and Fuel Tanks

(3) Propulsion System
  (a) Sustainer and Booster Engine Fuel Injection Manifold Pressures

(4) Hydraulic System
  (a) Sustainer Hydraulic Pressure

(5) Electrical System
  (a) 115 volt, 400 cps Voltage
  (b) Atlas/Capsule Interface Continuity.

Figure 1, in the Appendix, is a schematic diagram of the Abort Sensing and Implementation System and in addition shows the relationship of the ASIS with the Launch Control, Atlas and Capsule Subsystems.

It is anticipated that changes will occur within the definitions of this report. As such changes are accepted, revisions or addenda will be published for incorporation.

Best Available Copy

II. DESCRIPTION OF ASIS SEQUENTIAL OPERATIONS (Refer to Figure 1)

1. Test Conductor Abort Command

Prior to Atlas 2 inch motion, the only capability for energizing the capsule escape system rests with the Atlas Test Conductor. Following Arming of the Capsule Squib Bus and Test Conductor Abort Switch by the Pad Safety Officer, the Test Conductor may initiate an Abort Command by depressing the Abort Switch. The activation of this switch results in five +28 volt ground power signals to perform the following operations:

(a) Supply an engine cutoff command to the Ground Engine Relay Box.

(b) Initiate an Abort Command via RF link to the Capsule Command Receivers. The receivers, in turn, supply capsule +28 volt power through the umbilical cable to the ground Umbilical Eject and Tower Retract Relay to produce ejection of the umbilical connector. Ejection of the umbilical connector de-energizes the capsule Ground Umbilical Release Relay to allow +28 volt Squib Bus power to be applied to the Mayday Relays and initiate the capsule escape sequence.

(c) Supply +28 volt ground power via the umbilical cable to the capsule Ground Command Abort Relay which in turn closes a contact in parallel with the Command Receivers to follow the same operations described in item 1 (b).

(d) Initiate the 50 millisecond Time Delay Relay for backup of capsule umbilical ejection.

(e) Initiate the 550 millisecond Time Delay Relay for backup of capsule Mayday Relay activation. This command will start the escape sequence without being dependent upon capsule umbilical ejection.

2. ASIS Pre-Launch Ready-Release Interlock

At missile launch the ASIS must be in a "READY" condition (all ASIS parameter monitors "READY" and both Capsule Fail Detect Relays energized). This condition is accomplished by having at least one of each pair of the series connected pressure switch pairs activated, phase A voltage above 90 volts, and all Rate Gyro sets detecting less than the abort level, nominally zero degrees/second (see Table of Parameters, Appendix). For these input values the output of the ASIS will be two +28 volt signals to energize the Capsule Booster Failure Detector Relays-1 and 2, through the Abort Canister connectors J1 and J6, and the Capsule/Adapter Interface Connectors.

This document contains information affecting the national defense of the United States within the meaning of the Espionage Laws, Title 18 USC Sections 793 and 794. The transmission or the revelation of its contents in any manner to an unauthorized person is prohibited by law.

When energized, each Capsule Booster Failure Detector Relay supplies Missile +28 volts to energize one of the ASIS ECO & Ready Relays-1 and 2, located in the ASIS Canister, again via the same sets of connectors. Activation of both relays allows +28 volts from Missile Power Distribution to pass through the ASIS Canister connectors J5, J3 and J2, series connected ASIS ECO & Ready Relay contacts, and the Atlas Umbilical connector, J1001, to supply a Booster Abort Ready signal to energize the Main Engines Complete Relay, K24A, and close a contact in the Launch Control Release Ladder.

Closure of the Main Engines Complete Relay contact thus indicates "READY" for all monitored parameters and all ASIS and Adapter connectors.

3. <u>ASIS In-Flight Abort Commands</u>

The ASIS in-flight Abort Command capability is enabled when drop-out of the Booster 2 inch Motion Relays, caused by ejection of the Autopilot umbilical, J1001, after missile 2 inch motion, allows +28 volts to be applied to the Capsule Time Zero Relays. This enabling circuit is further protected by requiring that the ARM/SAFE switch in the Autopilot Programmer must be in the ARM position before +28 volts can be supplied to the Time Zero Relay. In addition a manual over-ride switch is included in the capsule for occupant activation of the Time Zero Relays if the Booster Time Zero circuit is not automatically energized at lift-off. After the Time Zero Relays have been energized the Mayday Relays-1,2 and 3 will be energized when +28 volts is simultaneously interrupted to both Capsule Failure Detect Relays-1 and 2.

From 2 inch motion to 2 inch motion plus 30 seconds the ASIS will initiate the capsule escape sequence but will not supply an engine cutoff signal. If, during this time interval, a Manual Fuel Cutoff is sent via Range Safety Command, the engines will be cutoff and escape sequence will be initiated via ASIS sensing of engine fuel manifold pressure decay.

4. <u>Emergency Atlas Engine Cutoff</u>

For added Astronaut Safety it is necessary that the Atlas engines be cutoff when an ASIS or Pilot Abort Command is given after Time Zero plus 30 seconds. Enablement of the engine cut-off circuit is accomplished by the Atlas Flight Control System Programmer providing +28 volts to contacts on the ASIS ECO &

This document contains information affecting the national defense of the United States within the meaning of the Espionage Laws, Title 18 USC Sections 793 and 794. The transmission or the revelation of its contents in any manner to an unauthorized person is prohibited by law.

Ready Relays-1 and 2 and the Capsule Abort ECO Relay at t_o+30 seconds allowing either an ASIS or a Capsule initiated Abort Command to cutoff the Atlas engines.

5. ASIS Booster Engine Cutoff and Staging Sequence

At the time of Atlas Booster Engines cutoff the ECO Relays-1 and 2 drop out, the series relay connections will now provide a circuit to by-pass the booster fuel pressure switches B_1 FP and B_2 FP and place the 11 psi LO_2 tank pressure switch ECO-LO_2 TK. in parallel with the 21.5 psi LO_2 tank pressure switches. At the start of the staging sequence the Autopilot Programmer initiates a +28 volt signal lasting for 8 seconds to program the ASIS Over/Rate Detectors to twice their normal abort threshold and tolerance. As the Atlas Booster section physically separates from the Atlas sustainer section a Capsule +28 volt circuit is broken to start the Capsule Escape Tower Jettison sequence by de-energizing the Capsule Booster Engine Separation Relay.

6. ASIS Sustainer Cutoff Sequence

On Project Mercury flights the sustainer and vernier engines are cutoff simultaneously. The +28 volt signal from Guidance for Sustainer Cutoff is also connected to the Capsule Booster Abort Disarm Relay to prevent capsule action on the Abort Command, which will be received when the Sustainer Fuel Pressure Switch goes into the Abort Mode due to sustainer engine cutoff, and to start a normal Capsule Separation Sequence. Range Safety Engine Cutoff Commands will not energize the Capsule Booster Abort Disarm Relay therefore the ASIS will command an Abort and the Capsule will go through its Escape Sequence if the Range Safety Officer sends a Manual Fuel Cutoff Command.

7. Range Safety Engine Cutoff and Destruct

For Mercury flights the normal Atlas Range Safety Command Engine Cutoff and Destruct capability will be modified. At Range Safety Officer initiation of a Manual Fuel Cutoff the command is sent immediately to the MAA Engine Relay Box to shutdown the engines and to the Three Second Time Delay to start the 3 second delayed Destruct Enable. ASIS sensing of engine fuel pressure decay at engine shutdown will start the Capsule Escape Sequence. Destruct ignition cannot occur until the 3 second enable is completed; following enablement a Range

This document contains information affecting the national defense of the United States within the meaning of the Espionage Laws, Title 18, U.S.C., Sections 793 and 794. Its transmission or the revelation of its contents in any manner to an unauthorized person is prohibited by law.

CONFIDENTIAL

Safety Destruct Command will produce destruction of the Atlas tanks at a time when the Mercury capsule has reached a safe distance from the Atlas.

This document contains information affecting the national defense of the United States within the meaning of the Espionage Laws, Title 18, USC, Sections 793 and 794. Its transmission or the revelation of its contents in any manner to an unauthorized person is prohibited by law.

III. ASIS/ATLAS SYSTEM PARAMETERS

1. Flight Control System

(a) Pitch, Yaw and Roll Rates:

Missile instability characterized by violent aerodynamic maneuvers and subsequent loss of structural integrity has occurred during the Atlas flight test program. During the time the flight control system is enabled, 2-inch rise through sustainer engine cutoff, rate gyro outputs from the Project Mercury Atlas flight control system, located at Atlas Station 675, will be monitored through a single section linear first-order lag filter with a time constant of 225 + 50 and -25 milliseconds. Rates in Pitch and Yaw exceeding 3.00 ± 0.15 degrees per second and rates in Roll exceeding 6.4 ± 0.30 degrees per second will automatically activate the capsule escape system, except for the period of Atlas Booster Engine Cutoff plus 8 ± 0.5 seconds. During this interval, the Pitch and Yaw rate thresholds are doubled (±12½%) in order to prevent activation of the capsule escape system by possible excessive but not dangerous Atlas Booster Staging transients. Positive redundancy in Pitch, Yaw and Roll excessive rate sensing will be provided by using a second set of gyros at Atlas Station 975.

The redundant gyros are required to protect the capsule from catastrophe if a flight control system rate gyro should fail since the failure of a rate gyro will put that particular sensor into an "Abort-Safe" condition. From the time the Project Mercury Atlas Flight Control System is enabled, through Sustainer Engine Cutoff, rate gyro outputs from the redundant "back-up" or "passive" gyro group will be monitored through a single section linear first-order lag filter with a time constant of 80 ± 20 milliseconds. Rates in Pitch and Yaw exceeding 4.75 ± 0.25 degrees per second and Rates in Roll exceeding 9.4 ± 0.40 degrees per second will automatically activate the capsule escape system, except that during the Atlas Booster Engine Staging interval, the redundant Pitch and Yaw rate gyro thresholds are also doubled (± 12½%). The different Abort levels and filter time constants for the two rate gyro sets were established after extensive study by CV-A and STL to provide specific protection against any possible control system malfunction during powered flight, and in addition, to provide positive redundancy for detection of the most likely control system malfunction.

The Flight Control System rate gyro group and the redundant

This document contains information affecting the national defense of the United States within the meaning of the Espionage Laws, Title 18, USC, Sections 793 and 794. The transmission or the revelation of its contents in any manner to an unauthorized person is prohibited by law.

rate gyro group are indicated on the schematic, Figure 1, as the "Missile Rate Gyro Set" and the "Backup Rate Gyro Set" respectively. The individual excessive rate or Over/Rate threshold detectors are indicated as "P1, Y1, R1, P2, Y2, and R2, O/R's". A detailed description of the Over/Rate detectors is given subsequently in section IV.

2. Tank Pressurization System:

(a) Liquid Oxygen Tank, Pressure:

The minimum liquid oxygen tank pressure required to support the capsule under Atlas Booster accelerations and maximum aerodynamic loading will be monitored by redundant pressure switches. If the tank pressure falls below 21.5 ± 0.5 psig during Atlas Booster phase, a signal will be initiated to activate a capsule escape. The liquid oxygen tank pressure switches are indicated on Figure 1 as "LO_2 TK, Pressure Sensor 1, and Pressure Sensor 2". After Booster Engine Cut-off it is no longer necessary to maintain 21.5 psig in the liquid oxygen tank for structural integrity. Therefore it was decided that even though a normal missile will always have a liquid oxygen tank pressure greater than 21.5 psig it was possible to prevent an inadvertent abort due to a non-hazardous malfunction after staging by adding a third pressure switch, operating at 11.0 ± 0.5 psig, in parallel with the existing 21.5 psig switches. This pressure switch is indicated on Figure 1 as "BCO-LO_2 TK". It is enabled by de-energizing both of the redundant "BCO Relays-1 and 2" by dropout of the Engine Relay Box "Booster Flight Lock-In Signal" at Atlas Booster Engine Cutoff. Details of the pressure switch circuitry will be given subsequently in section IV.

(b) Liquid Oxygen Tank/Fuel Tank, Differential Pressure:

The minimum differential pressure required to avoid reversal of the liquid oxygen tank/fuel tank intermediate bulkhead will be monitored by redundant pressure switches. If this pressure differential falls below 4.0 ± 0.5 psid during Atlas flight, a signal will be initiated to activate capsule escape. The liquid oxygen tank/fuel tank differential pressure switches are indicated on Figure 1 as "ΔP-Pressure Sensor 1, and Pressure Sensor 2".

Fuel Tank Pressure is also monitored indirectly since Fuel Tank Pressure minus Liquid Oxygen Tank Pressure minus Liquid Oxygen Head Pressure results in the differential pressure

This document contains information affecting the national defense of the United States within the meaning of the Espionage Laws, Title 18 USC, Sections 793 and 794. Its transmission or the revelation of its contents in any manner to an unauthorized person is prohibited by law.

FORM NO. A 702-2

CONFIDENTIAL

serves the intermediate bulkhead.

3. Propulsion System:

(a) Fuel Injection Manifold Pressures:

The minimum Fuel Injection Manifold Pressures required to sustain required Project Mercury Atlas propulsion performance will be monitored by redundant pressure switches.

If either Atlas Booster Engine Fuel Injection Manifold pressure falls below 470 ± 10 psia during Atlas Booster Engine flight phase, a signal will be initiated to activate capsule escape. The Booster Engine Fuel Injection Manifold Pressure Switches are indicated on Figure 1 as "B_1 FP and B_2 FP-Pressure Sensor 1, and Pressure Sensor 2".

If the Atlas Sustainer Engine Fuel Injection Manifold Pressure falls below 560 ± 10 psia, a signal will be initiated to activate capsule escape. The Sustainer Engine Fuel Injection Manifold Pressure Switches are indicated on Figure 1 as "SFP-Pressure Sensor 1, and Pressure Sensor 2".

Booster Engine switches are disarmed at Atlas Booster Engine Cutoff. This is accomplished by de-energizing either of the redundant "BOO Relays-1 and 2" through dropout of the Engine Relay Box "Booster Flight Lock-In Signal" backed up by energizing the O/R Relay from the Autopilot Programmer Staging Rate Ratio gyro signal, (on for 8 seconds).

4. Hydraulic System:

(a) Sustainer Hydraulic Pressure:

The minimum Sustainer Hydraulic Pressure required, during powered flight, to null the Sustainer Engine during Booster Staging and to ensure Sustainer/Vernier Fuel Cutoff during engine shutdown will be monitored in the ASES by redundant pressure switches. Sustainer/Vernier Engine shutdown capability at times immediately prior to capsule orbital injection is especially important due to the possibility for injection of the capsule occupant into an insurvivable orbit if excessive Sustainer burning, and consequently excessive velocity, were allowed. If the Sustainer Hydraulic Pressure falls below 2000 ± 40 psia during Atlas flight, a signal will be initiated to activate the capsule escape system. Redundant Sustainer Hydraulic Pressure Switches are indicated on Figure 1 as "SHP-Pressure Sensor 1, and

This document contains information affecting the national defense of the United States within the meaning of the Espionage Law, 18 U.S.C. Sections 793 and 794. Its transmission or the revelation of its contents in any manner to an unauthorized person is prohibited by law.

Pressure Sensor 2".

5. **Electrical System:**

(a) 115 volt, 400 cps Voltage:

Atlas alternating current voltage is sensed at the control input of the 1-NOT Gates. The rectified voltage output of the series pressure switches must be maintained above the zener voltage of the diodes for a Safe condition to exist. Phase A source voltage levels below 80 ± 10 volts rms will cause a signal to be initiated for activation of the capsule escape system. A description of the undervoltage cutoff circuitry will be given subsequently in section IV.

(b) Loss of Atlas/Capsule Interface Continuity:

Loss of electrical continuity between the Mercury Capsule and Atlas Missile at the Interface wiring and/or connectors, "Interface 1 and 2", see Figure 1, will cause a signal to be initiated for activation of the capsule escape system. Loss of one interface connector and/or associated prime circuits will not inhibit normal performance of the remaining interface connectors and/or associated prime circuits. Loss of both interface connectors and/or associated prime circuits will cause automatic activation of the capsule escape system.

Best Available Copy

IV. DETAIL AND FUNCTIONAL DESCRIPTIONS:

The Abort Sensing and Implementation System (ASIS) is shown functionally in Figure 1. Figure 1, from left to right, includes Blockhouse Launch Control and Abort Circuits, Atlas Abort Sensing Circuits (ASIS), Booster/Capsule wiring and connectors and associated capsule circuitry. That portion of Figure 1 which shows capsule component parts does not show every part and connection MC DONNELL provides in the capsule, but indicates only those parts associated with the ASIS to demonstrate interaction of CV-A and MAC equipment. In the ASIS all the various means of sensing missile failure are collected and summed together by magnetic logic units to form the ASIS output busses connected to pins D, "Interface Connectors 1 and 2". In the "READY" state each output bus furnishes +23 volts to the capsule Booster Failure Detector Relays, R2 and R3. Both of these +23 volt "READY" signals must drop to provide an Abort Command. A dropout of any of the ASIS parameter sensor switch ducts (both pressure switches must indicate an abort condition) and/or loss of electrical continuity in both ASIS output busses or circuits (pins D, "Interface Connectors 1 and 2"), and/or a signal or signals generated by any one or all Over/Rate Detector circuits (P1, Y1, R1, P2, Y2, R2, O/R's) will drop out the "READY" signal furnished to the capsule Booster Failure Detector Relays 1 and 2.

ASIS detection of parameter malfunction proceeds in the following manner; if a sensed parameter varies beyond the acceptable limits imposed by the sensor then the output of the associated magnetic logic unit will increase to a value such that +7 volts will appear on the common line connecting the outputs of the three remaining magnetic logic units of the set and the inputs of the two 2-NOT Gates. (A set of magnetic logic units is composed of one 1-NOT Gate and one each of the Pitch, Yaw and Roll Over/Rate Detectors. There are two such sets working in a parallel redundant configuration and the output of each set is connected to one of the two control inputs of each of the two 2-NOT Gates. The +7 volt output signal applied to one of the control inputs of each of the two 2-NOT Gates reduces both outputs from the "READY" +23 volts signal to 0 volts. With the loss of the two +23 volt signals, the capsule Booster Failure Detector Relays-1 and 2 are de-energized, removing +28 volts from the ASIS ECO & Ready Relays-1 and 2, and also supplying +28 volts to the Mayday Relays-1, 2 and 3 provided the Booster Abort Disarm Relay is ARMED and the Time Zero Relays are energized. Loss of +28 volts to the ASIS ECO & Ready Relays-1 and 2 will produce engine shutdown provided the 2 inch plus 30 second Autopilot Programmer switch has closed. The application of +28 volts to energize the Mayday Relays-1, 2 and 3 will initiate the capsule escape sequence and also energize the Capsule ECO Relay to produce a redundant path for Engine Cutoff.

In conjunction with the detection ability of ASIS, any loss of contin-

This document contains information affecting the national defense of the United States within the meaning of the Espionage Laws, Title 18 USC, Sections 793 and 794. Its transmission or the revelation of its contents in any manner to an unauthorized person is prohibited by law.

uity through a connector or prime circuit which results in loss of both +23 volt signals to the Booster Failure Detector Relays-1 and 2 will produce the same capsule escape and Engine shutdown sequence as was previously described.

1. <u>ASIS Magnetic Logic Units and Connections</u>:

The use of magnetic logic units in the ASIS was based on their inherent desireable characteristics which enhance the performance and reliability of almost any logic system. The magnetic logic units used are simple, consisting only of magnetic elements and silicon rectifiers. The magnetic elements themselves are very rugged, and if properly manufactured and encased, have operating lives measured in decades. The silicon diodes which have much shorter operating lives, have been analyzed for a predictable failure mode. As a result, the reliability of the overall magnetic unit is improved by using a specific diode redundance configuration.

The NOT Gate amplifiers (two 1-NOT's and two 2-NOT's) function in a similar manner. The two self saturating gate windings, each wound on a separate toroid, are energized by half-wave currents in 180 degree phase relationship. The two outputs are combined to produce a full-wave rectified signal whose voltage is approximately 80% of the input rms excitation voltage. The control windings (or winding) are common to both cores and are energized in such a manner that a step increase in either control current results in a drop in amplifier output voltage. This is a bistable form of operation where an input greater than the gating level results in near zero output and vice versa, see Figure 4. The only difference between the 1-NOT and the 2-NOT is the inclusion of two control windings on the 2-NOT, each winding having separate and full gate control.

In operation, the 1-NOT Gate will have either zero volts applied to the control winding to give approximately 7 volts output or 2 to 4 volts input to give approximately 0 volt out. The 2-NOT control winding (one of two) receives either zero or 7 volts from a set of three Over/Rate Detectors and one 1-NOT Gate for which the 2-NOT Gate output will be +23 volts or +1 volt respectively. This output voltage is applied to one of the Capsule Booster Failure Detector Relays through a zener diode for either zero or +23 volts to appear at the relay coil. The second control winding is supplied a signal voltage from the backup set of three Over/Rate Detectors and one 1-NOT Gate to perform exactly as the first control winding.

The magnetic amplifier in the Over/Rate Detector is essentially the same as the two NOT Gate amplifiers with the exception that

This document contains information affecting the national defense of the United States within the meaning of the Espionage Laws, Title 18 U.S.C., Sections 793 and 794. Its transmission or the revelation of its contents in any manner to an unauthorized person is prohibited by law.

three control windings are used, a control winding, a bias winding and a feedback/compensation winding. With no signal current into the control winding (zero output from the phase detector) the bias and compensator windings maintain the magnetic amplifier output near the 1 volt "ABORT" signal, see Figure 3. As the control winding current increases due to an increasing rate gyro signal there is little or no change in the output of the gate windings. When the algebraic sum of ampere-turns in the three control windings approaches cancellation the magnetic amplifier operation is in the region of the knee of the response curve, see Figure 3. As the control current approaches 1 milliampere of Over/Rate signal into the control winding (2 ma at Booster Engine Staging) the magnetic amplifier output tends to increase. This output voltage change is applied to the feedback/compensator winding to regeneratively switch the output to a +12 volt "ABORT" signal.

Zener diodes are used in several of the input and output circuits to ensure that the voltage is zero or maximum before being applied to the following stage.

2. <u>ABIE Gyro Over/Rate Detectors and Compensations</u>:

The six gyro Over/Rate Detector units represent the bulk of the ABIE in-flight Abort Sensing and Control Equipment. The condition for a rate gyro abort may be expressed in ratio form as:

$$\frac{V_1\left(\frac{1}{1+\frac{1}{\tau K}}\right)}{E_x} \geq K$$

where V_1 is the particular rate gyro signal after demodulation
K is a ratio for the appropriate threshold value
E_x is the gyro excitation voltage
and τ is the applicable signal transient sensing filter time constant.

The output circuit of each gyro Over/Rate Detector consists of a specially designed magnetic comparator, see Figure 2. The comparator is designed as a ratio device in order to (1) integrate reliable sensing of the loss of rate gyro excitation voltage, (2) compensate for changes in the Atlas 400 cps voltage (from 90 to 125 v. rms) to minimize variations in the abort threshold, and (3) accommodate the rate gyro gain changes for initial unmanned Project Mercury Flights.

With 26 volts gyro excitation, the bias rectifier supplies -4 ma (-8 ma for double threshold) to the bias winding of the magnetic amplifier comparator. Any variation in gyro excitation will

This document contains information affecting the national defense of the United States within the meaning of the Espionage Laws, Title 18 USC, Sections 793 and 794. The transmission or the revelation of its contents in any manner to an unauthorized person is prohibited by law.

result in a correction of abort threshold to maintain the sensitivity constant. The compensation winding is supplied approximately 1.2 ma from the rectified phase A 400 cps power line for correction of threshold variations due to changes in the power line voltage. This winding also has positive feedback from the mag. amp. output to produce regenerative control of the switching operation. During the "READY" condition these two windings maintain the mag. amp. comparator in the unsaturated, zero output, state. To furnish an Abort signal, nominally +12 volts average, the demodulator must furnish 1 ma control current (2 ma for double threshold) to its winding. The amplifier and demodulator are capable of 2 1/2 to 3 ma at saturation. The amplifier consists of one stage, using two silicon transistors in a Darlington compound connection. Negative current feedback is used to give gain stability and high input and output impedances. Phase sensitive demodulation of the amplifier signal is required to give polarity-reversible time - constant integration in the RC filter. The passive RC Filter is a linear single unit first-order lag filter with -6 db roll-off frequency characteristics from the -3 db down frequency.

The absolute magnitude of the filtered rate signal is sensed by the diode bridge rectifier by converting the polarity-reversible rate signal from the filter into a unipolar signal. The unipolar signal always drives the magnetic amplifier toward conduction. The compensating circuit furnishes a current to the magnetic amplifier to hold it cutoff until the algebraic sum of control winding ampere-turns is zero instead of the variable off-set it would otherwise have with increasing and decreasing line voltages. This circuit increases the accuracy of the comparator as a ratio detector. The magnetic amplifier comparator provides a null voltage of approximately +1 volt for "READY" and nominally +12 volts average for an "ABORT" condition.

In order to prevent the summation of the 3 Over/Rate Comparator null currents from triggering the output magnetic amplifier, a zener diode is placed in series with each comparator output so that the output of the Over/Rate detector is 0 Volts for "READY" and +7 volts for "ABORT", (-5 volts due to zener drop).

Redundancy in sensing missile rates has been provided by having dual rate sensors each capable of generating an Abort Command, (provides drop-out of +23 volts to both Capsule Fail Detect Relays). In order to minimize the possibility of an Over/Rate Detector generating an inadvertent Abort the Over/Rate Detector circuit has been designed where possible such that the failure of any one component will cause that circuit to indicate "READY" since the redundant Over/Rate sensor can still sense and command "ABORT".

Best Available Copy

3. **ASIS Pressure Switches, Connections and Excitation:**

The use of Atlas flight proven pressure transducers modified into pressure switches for ASIS, was based on extensive flight test experience and component testing. Tests to-date have confirmed the fact that these switches are the most reliable pressure sensors available in the practicable future for Atlas flight environments. All of the pressure sensors utilize a wiper arm moving on a bus bar in which a gap is located at the point corresponding to the Abort condition. The wiper arm crosses this gap in a make-before-break switching mode to continue on the Abort section of the bus bar. Opening of the "READY" circuit of the pressure switch will supply an "ABORT" signal to ASIS while closure of the "ABORT" circuit will supply an "ABORT" signal to Telemetry. For these switches, the closed when energized mode of "READY" operation was selected as the most reliable type of operation. This was based on failure mode data experienced in the Atlas flight test program as well as component testing and analysis.

The series parallel electrical connection of the pressure switch duets was an extension of the general "Energized for 'READY' and de-energized for 'ABORT'" philosophy recommended by Convair-Astronautics for Project Mercury. This type of electrical connection allows the reliability advantages of Fail-Safe parallel switch duets (the predominate fail mode of a switch is to "ABORT") without the disadvantages of full parallel connections of all switches.

The electrical excitation for the ASIS pressure switch duet chain is "ungrounded". This increases ASIS reliability when compared to a unilaterally grounded excitation connection. For example, one ground incurred in ASIS pressure switch harnesses will not affect pressure switch chain operation. Two or more grounds will only by-pass those elements between grounds allowing normal operation of the remaining switches.

4. **AC Undervoltage:**

A reduction in the 115 volts rms supply voltage to the pressure switch transformer will cause a corresponding reduction in the control winding current of the 1-NOT Gate magnetic amplifier. Zener diodes and a series resistor limit the magnetic amplifier control winding current so that a supply voltage of 80 ± 10 volts rms causes the control winding current to fall below the value required to keep the magnetic amplifier in a "READY" condition. This causes the 1-NOT Gate to have an output voltage and a sub-normal "ABORT" signal from the ASIS.

Best Available Copy

APPENDIX

This document contains information affecting the national defense of the United States within the meaning of the Espionage Laws, Title 18 USC Sections 793 and 794. The transmission or the revelation of its contents in any manner to an unauthorized person is prohibited by law.

CONFIDENTIAL

TABLE I. TABLE OF PARAMETERS

PARAMETER	PRE-STAGING VALUES			STAGING VALUES 2			POST-STAGING VALUES		
	NOM.	+	-	NOM	+	-	NOM.	+	-
Pitch Rates (Primary Set) 4 deg/sec	3.00	0.15	0.15	6.00	0.75	0.75	3.00	0.15	0.15
(Backup Set) deg/sec	4.75	0.25	0.25	9.50	1.19	1.19	4.75	0.25	0.25
Yaw Rates (Primary Set) 4 deg/sec	3.00	0.15	0.15	6.00	0.6	0.6	3.00	0.15	0.15
(Backup Set) deg/sec	4.75	0.25	0.25	9.50	0.95	0.95	4.75	0.25	0.25
Roll Rates (Primary Set) 4 deg/sec	6.40	0.30	0.30	6.40	0.30	0.30	6.40	0.30	0.30
(Backup Set) deg/sec	9.40	0.40	0.40	9.40	0.40	0.40	9.40	0.40	0.40
LO_2 Tank Pressure, Ullage psig	18.5 21.5	1.0 0.50	1.0 0.50	11.0	0.50	0.50	11.0	0.50	0.50
LO_2 Fuel Tanks Diff. Press. 5 psid	4.0	0.50	0.50	4.0	0.50	0.50	4.0	0.50	0.50
Fuel Manifold Press, Booster psia	470	10	10	None	-	-	None	-	-
Fuel Manifold Press, Sust. psia	560	10	10	560	10	10	560	10	10
Hydraulic Press, Sust. psia	2,000	40	40	2,000	40	40	2,000	40	40
Phase A, 400 cps, Voltage 6 Volts	90	0	20	90	0	20	90	0	20

1. Pre-staging Values are the parameter threshold values and tolerances from 2 inch motion to Booster Engine Cutoff.
2. Staging Values are the parameter threshold values and tolerances for 8 ± 0.5 seconds following Booster Cutoff.
3. Post-Staging Values are the parameter threshold values and tolerances from Booster Engine Cutoff plus 8 ± 0.5 seconds to Sustainer/Vernier Engine Cutoff.
4. The Over/Rate detectors are monitored through the following filter time constants:
   a. Primary Set, 225 ± 50 milliseconds.
   b. Backup Set, 80 ± 20 milliseconds.
5. The LOX/Fuel Tanks Differential Pressure is the pressure existant across the intermediate bulkhead.
6. The Phase A, 400 cps, Voltage threshold shall activate predominately in the 90 volt region.

CONFIDENTIAL

This document contains information affecting the national defense of the United States within the meaning of the Espionage Laws Title 18, USC, Sections 793 and 794. The transmission or the revelation of its contents in any manner to an unauthorized person is prohibited by law.

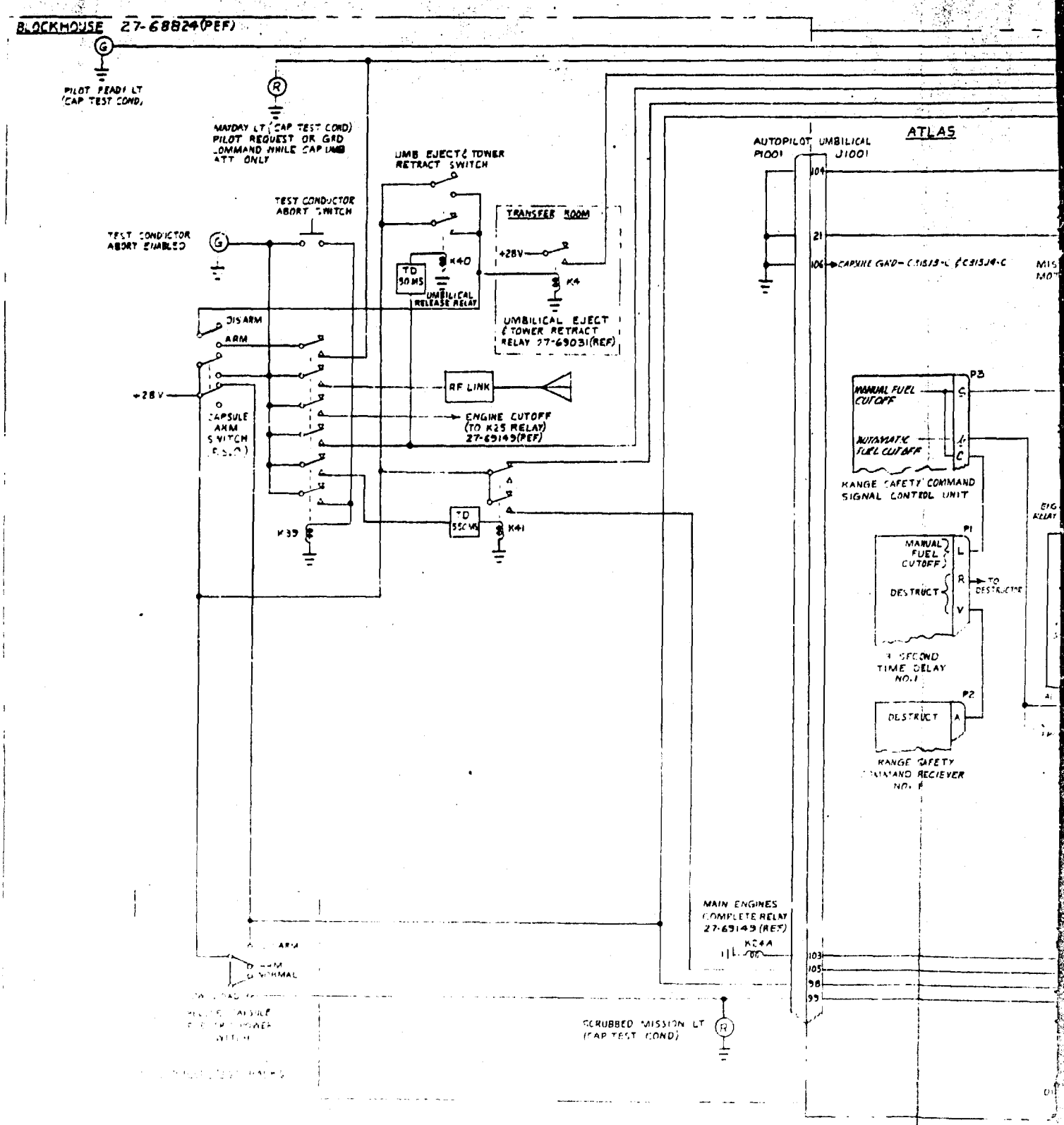

Best Available Copy

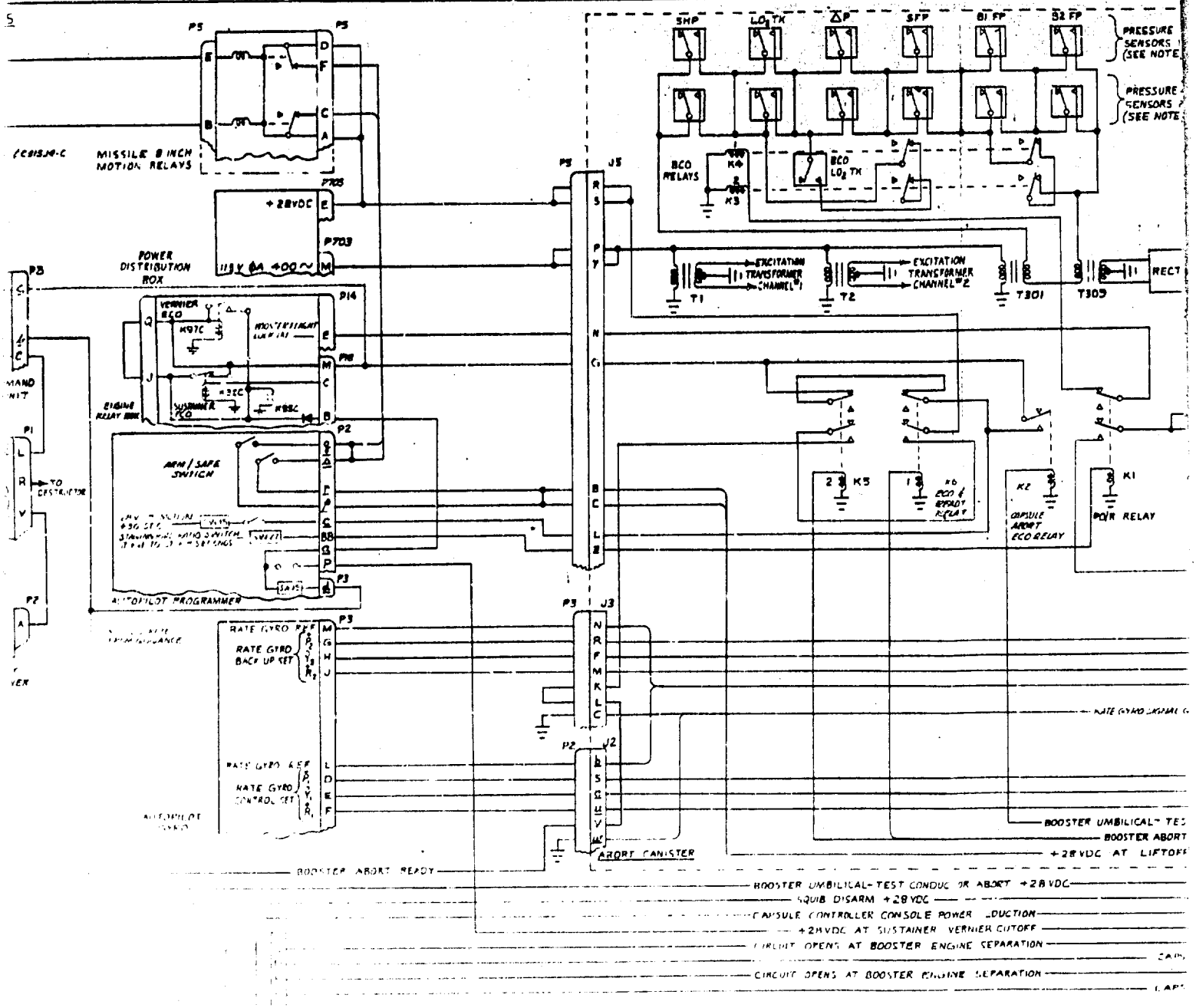

Best Available Copy

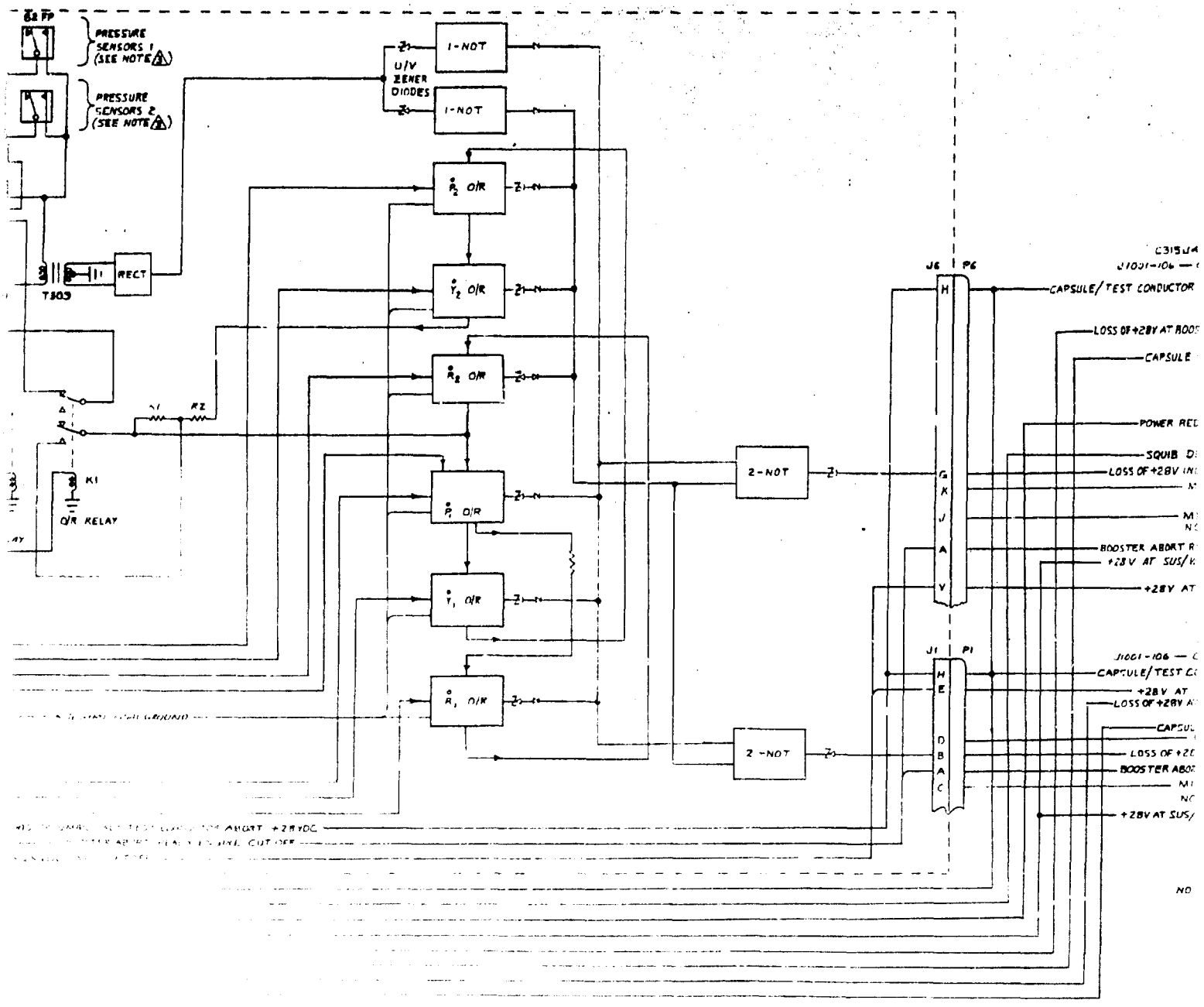

Best Available Copy

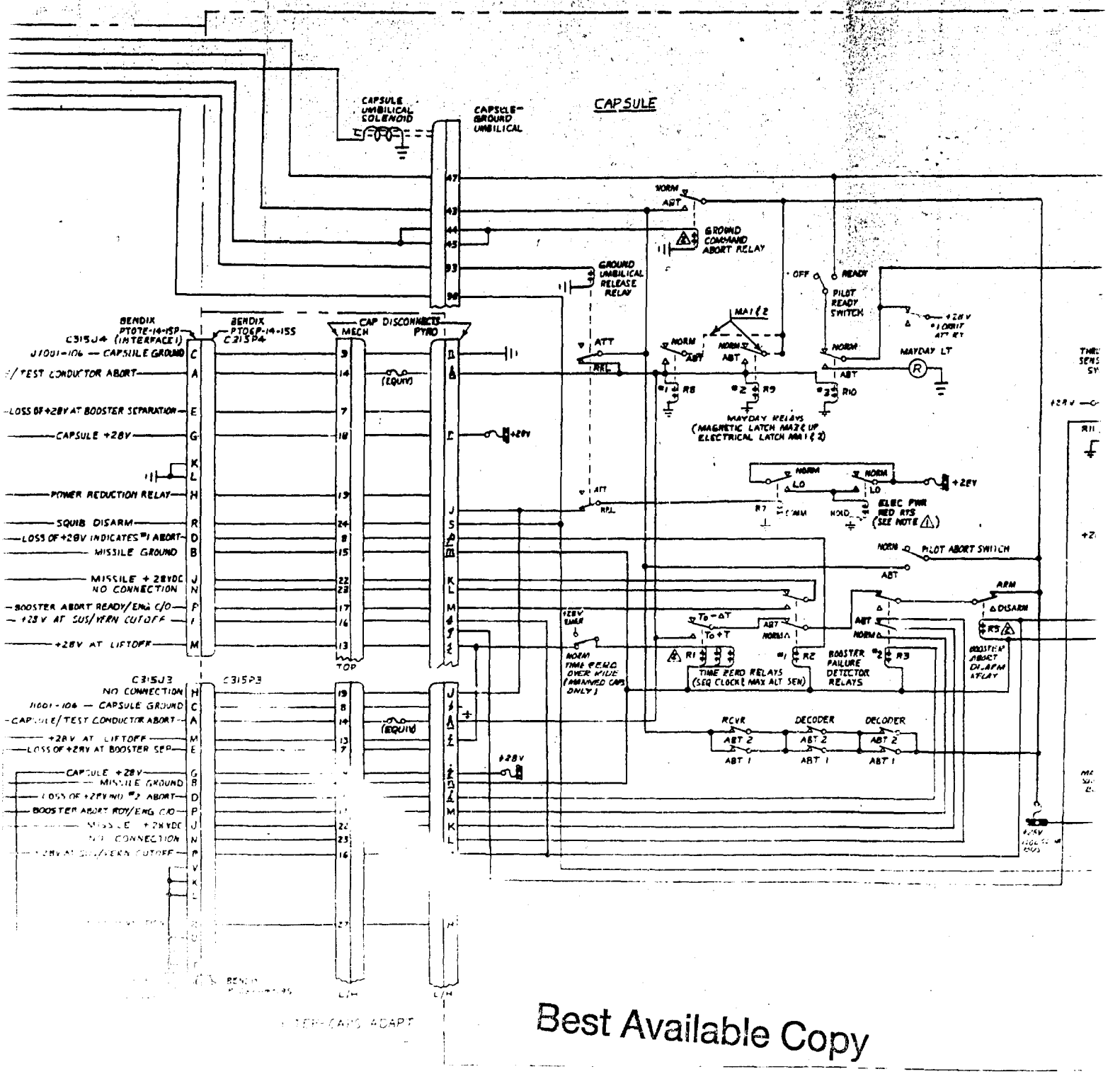

Best Available Copy

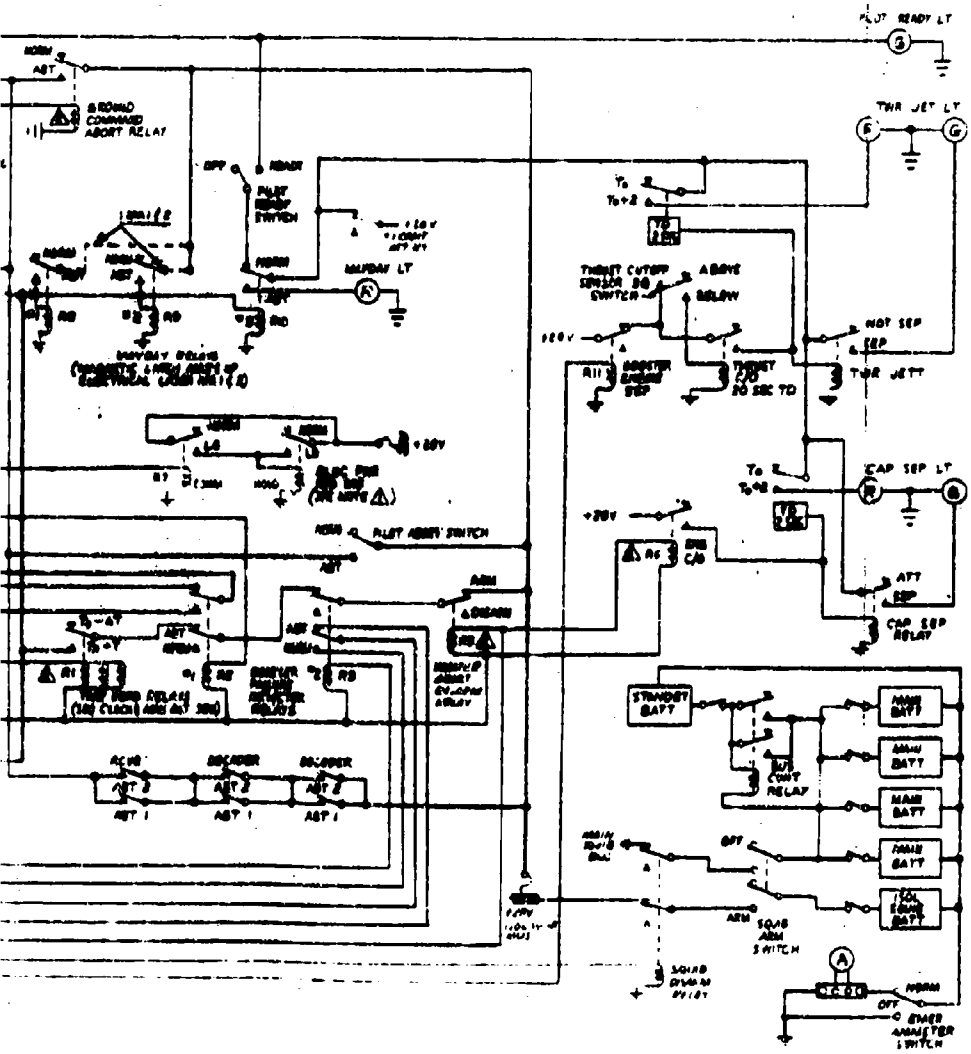

NOTES:

1. CONTACTS SHOWN UNCONNECTED ARE USED FOR TELEMETERING.
2. LATCHING RELAY
3. REDUCE POWER LOCK OFF

27-00033

FIGURE 1

E

AE60-0576
PAGE 18

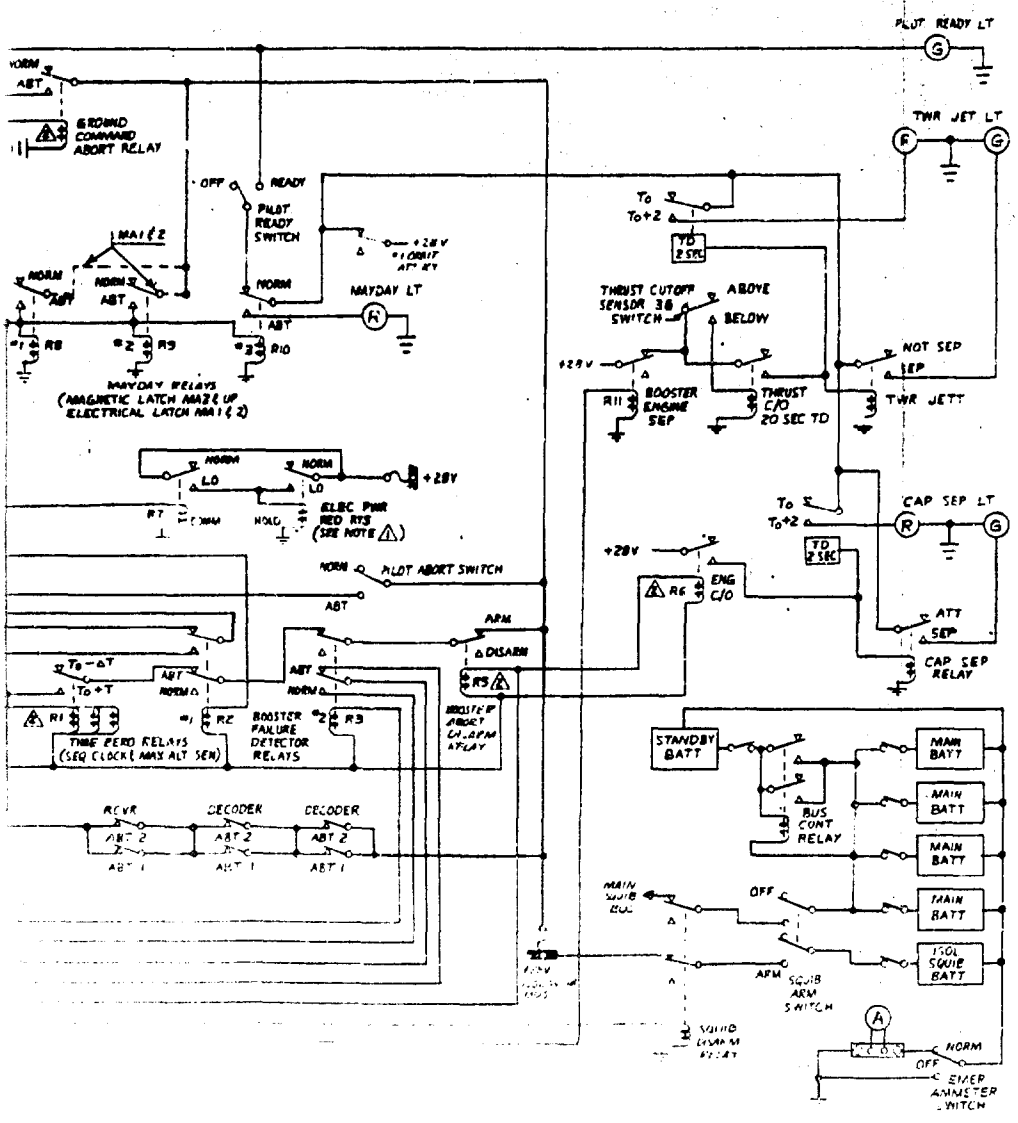

1. STALTS SHOWN UNCONNECTED ARE USED FOR TELEMETERING
2. LATCHING RELAY
3. RED LE POWER LOCK ... FER

NOTES:

27-00033
SHEET 1 OF 1
AUTH

FIGURE 1

Best Available Copy

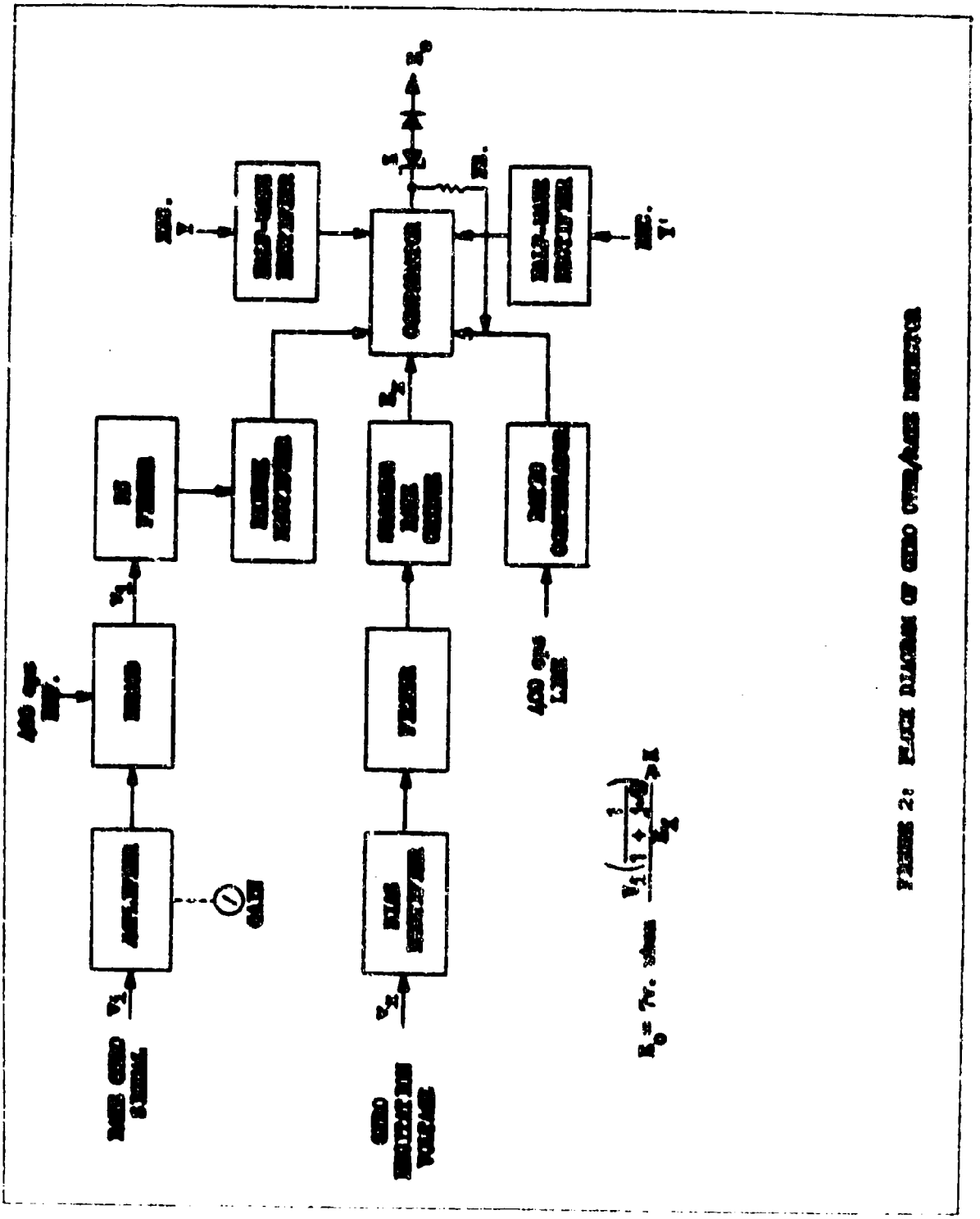

FIGURE 2: BLOCK DIAGRAM OF GUIDO CONVERTER DEMODULATOR

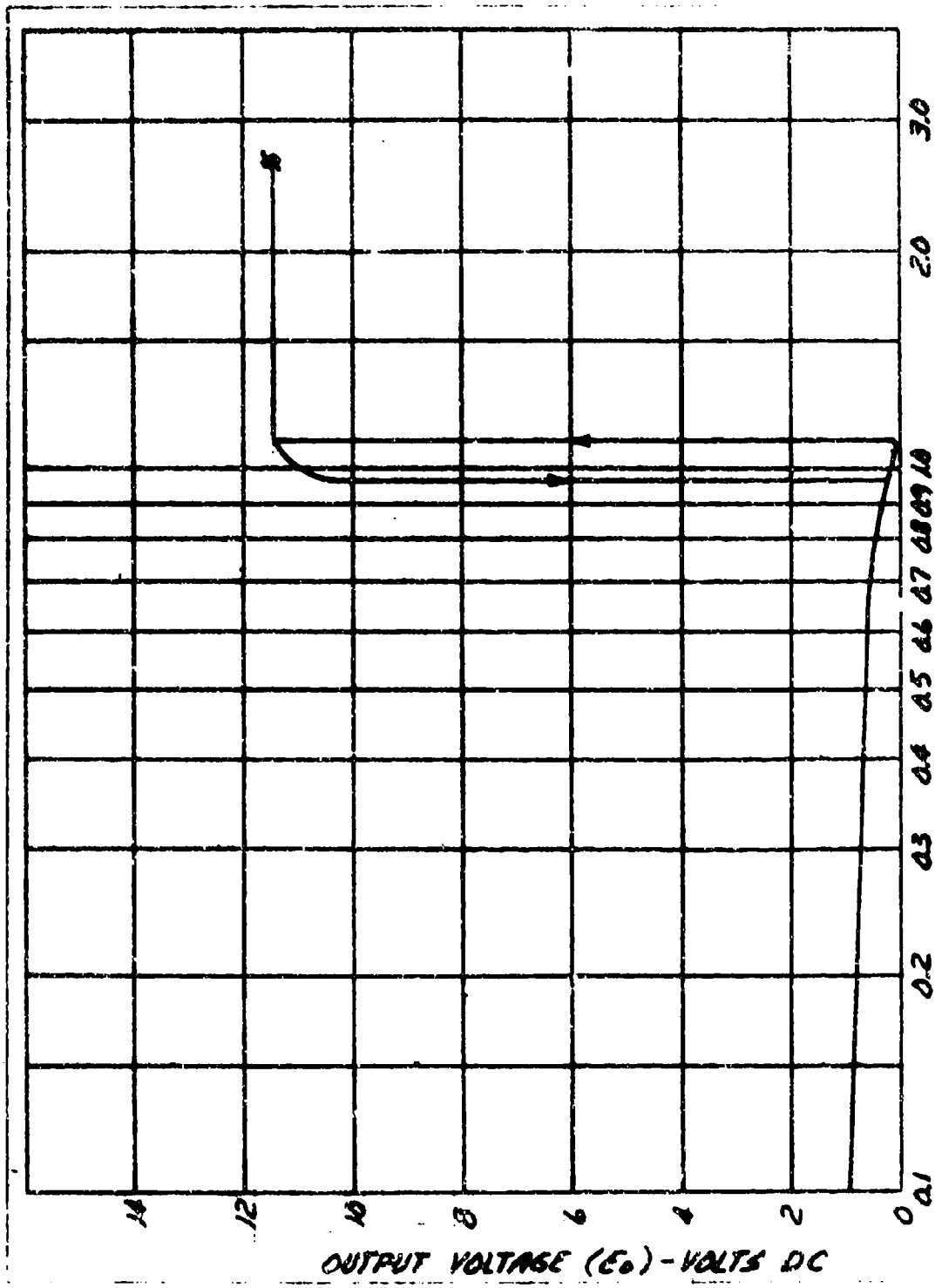

FIGURE 3: TRANSITION CONTROL CHARACTERISTICS OF MAGNETIC AMPLIFIER COMPONENTS

This document contains information affecting the national defense of the United States within the meaning of the Espionage Laws, Title 18, USC, Sections 793 and 794. The transmission or revelation of its contents in any manner to an unauthorized person is prohibited by law.

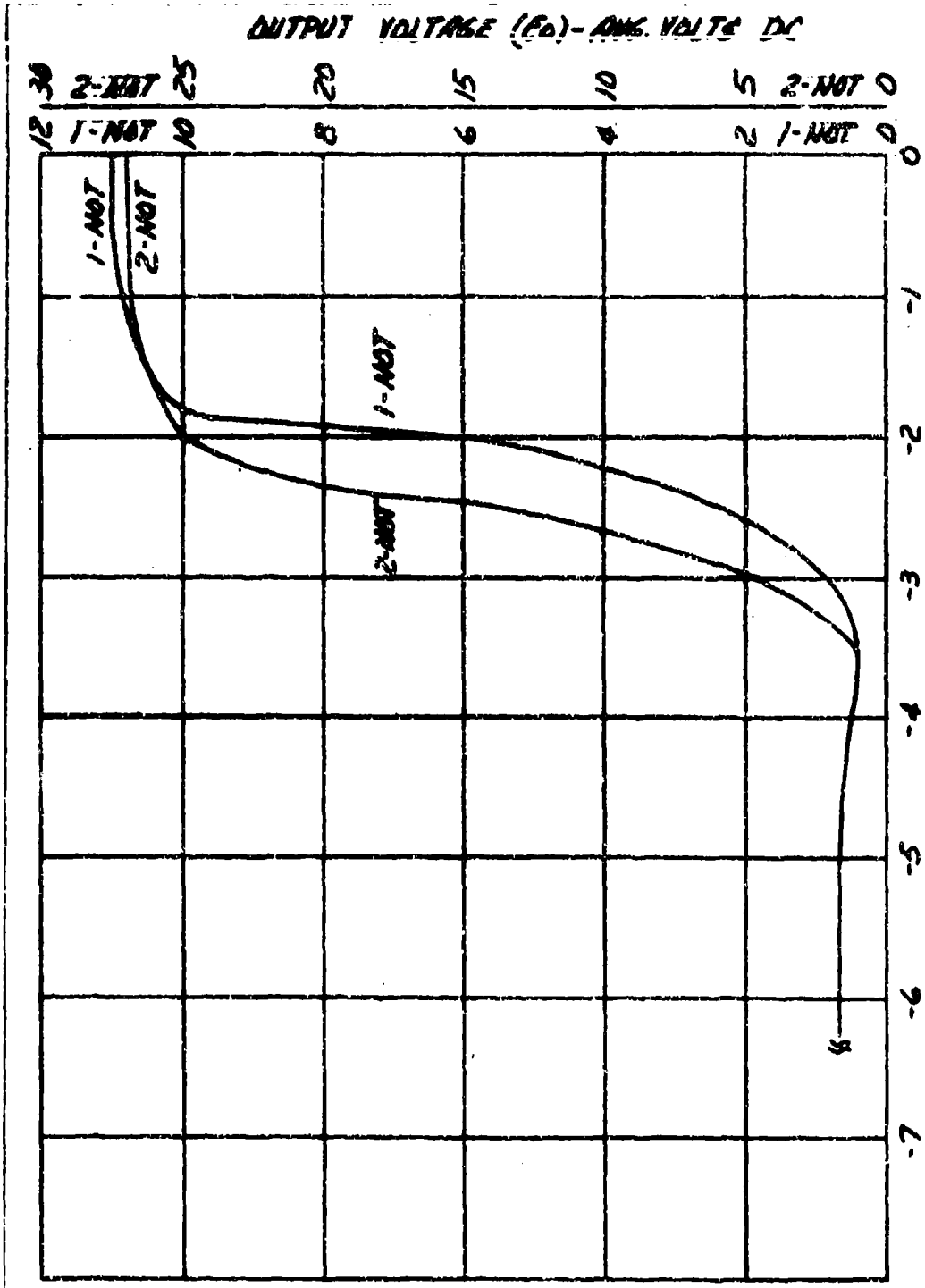

FIGURE 4: TRANSITION CONTROL CHARACTERISTICS OF 162-NOT MAGNETIC AMPLIFIERS

This document contains information affecting the national defense of the United States within the meaning of the Espionage Laws, Title 18, USC, Sections 793 and 794. The transmission or revelation of its contents in any manner to an unauthorized person is prohibited by law.

CONFIDENTIAL

FORM NO. A-782-2