UNCLASSIFIED

AD NUMBER
AD815067
NEW LIMITATION CHANGE
TO Approved for public release, distribution unlimited
FROM Distribution authorized to U.S. Gov't. agencies and their contractors; Critical Technology; MAY 1967. Other requests shall be referred to Rome Air Development Center, Attn: EMLI, Griffiss AFB, NY 13440.
AUTHORITY
RADC ltr, 20 Nov 1974

THIS PAGE IS UNCLASSIFIED

AD815067

RADC-TR-67-145, Volume I
Final Report

SURVEILLANCE TECHNOLOGY STUDY AND ANALYSIS

Volume I. Multifilar Contrawound Helical Antenna Study and Analysis

Carl W. Gerst

Syracuse University Research Corporation

TECHNICAL REPORT NO. RADC-TR- 67-145
May 1967

This document is subject to special export controls and each transmittal to foreign governments, foreign nationals or representatives thereto may be made only with prior approval of RADC (EMLI), GAFB, N.Y. 13440

Rome Air Development Center
Research and Technology Division
Air Force Systems Command
Griffiss Air Force Base, New York

When US Government drawings, specifications, or other data are used for any purpose other than a definitely related government procurement operation, the government thereby incurs no responsibility nor any obligation whatsoever; and the fact that the government may have formulated, furnished, or in any way supplied the said drawings, specifications, or other data is not to be regarded, by implication or otherwise, as in any manner licensing the holder or any other person or corporation, or conveying any rights or permission to manufacturer, use, or sell any patented invention that may in any way be related thereto.

Do not return this copy. Retain or destroy.

SURVEILLANCE TECHNOLOGY STUDY AND ANALYSIS

Volume I. Multifilar Contrawound Helical Antenna Study and Analysis

Carl W. Gerst

Syracuse University Research Corporation

This document is subject to special export controls and each transmittal to foreign governments, foreign nationals or representatives thereto may be made only with prior approval of RADC (EMLI), GAFB, N.Y. 13440

AFLC, GAFB, N.Y., 5 Jun 67-112

FOREWORD

This final report consisting of five volumes was prepared by L. Widmann, R. Davis, C. Gerst, L. Witehead and J. Stauffer of Syracuse University Research Corporation, P.O. Box 26, University Station, Syracuse, New York, under Contract AF30(602)-3438, project number 5582, task number 558202. Period covered was from October 1965 to October 1966. RADC project engineer is Kenneth C. Stiefvater (EMATS).

This document contains information embargoed from release to Sino-Soviet Bloc Countries by AFR 400-10, "Strategic Trade Control Program."

This report has been reviewed and is approved.

Approved:

Kenneth C Stiefvater

KENNETH C. STIEFVATER
Project Engineer
EMATS/x3445

Approved:

Alfred W. Parker

THOMAS S. BOND, JR.
Colonel, USAF
Chief, Surveillance &
Control Division

FOR THE COMMANDER:

Fred J. Brand
for IRVING J. GABELMAN
Chief, Advanced Studies Group

ABSTRACT

This report covers the development of a multifilar helical contra-wound antenna which may be suitable as the wideband radiating element for large HF array antennas.

TABLE OF CONTENTS

SECTION		Page
I.	INTRODUCTION	1
II.	EXPERIMENTAL RESULTS	3
	1. Bandwidth	3
	2. Antenna Patterns	8
	3. Antenna Beamwidth	11
	4. Impedance	13
III.	FEED TECHNIQUES FOR SUPPRESSION OF UNWANTED COUPLED MODES ON THE MCH	15
	1. Theorem: Equality of Impedance of Symmetrical Systems Left Hand Circular (LHC) and Right Hand Circular (RHC)	15
	2. Impedance Paradox of Non-Contrawound Helix	15
	3. Feed Techniques for Contrawound Multifilar Helices	20
IV.	THE APPLICATION OF A MCH ANTENNA TO THE OVERALL OHR SYSTEM	26
V.	CONCLUSION	30

LIST OF ILLUSTRATIONS

Figure		Page
1.	Theoretical and Experimental (N=4 only) Radiation Boundaries for Multifilar Helices Showing Normalized Helix Circumference as a Function of Pitch Angle with Number of Windings (N) as Parameter.	4
2.	Experimental Set-up For Measurement of Quadrifilar Antenna Transmission and Radiation.	5
3	Non-Contrawound Helix Transmission Characteristics for Radiating and Non-radiating Excitation.	7
4 (a, b)	Normalized Antenna Gain for Quadrifilar MCH Antenna	9, 10
5.	Half Power Beamwidth vs. Antenna Length	12
6.	Input VSWR Referenced to 50Ω As a Function of Normalized Helix Circumference	14
7.	Feed Network for Left and Right Hand Circular Polarization	16
8(a, b)	Brillouin k-β Diagram for the Radiating Mode	18
9.	Patterns of the Radiating and Non-radiating Modes for a Non-Contrawound Quadrifilar Helix (F = 1.0 GHz, D = 2", C/λ = .5)	19
10.	Feed Networks for Separated Left and Right Hand Quadrifilar Helices	22
11.	Multiwire Transmission Line Feed for a Multifilar Contrawound Helix	24

SECTION I

INTRODUCTION

This report covers the development of a multifilar helical contrawound antenna which may be suitable as the wideband radiating element of an OHR system. The features of this particular radiator which make it suitable for such an application are:

1) Gain and bandwidth are essentially independent
2) Any polarization may be used, linear, circular, etc.
3) The antenna cross-section may be made electrically small.

To avoid excessive development costs, a microwave model of the antenna was developed to correlate the experimental and theoretical behavior. No major technical difficulties are anticipated in scaling to lower frequencies; however, feed networks are being investigated in the H.F. range.

Theoretical predictions regarding bandwidth and gain are checked experimentally. The characteristic impedance was checked experimentally. Several feed techniques to couple energy to the antenna were investigated. The relative advantages of the various feed techniques are discussed.

In OHR systems operating over a large frequency range the MCH antenna which has a constant gain aperture product provides a better match to targets having a constant area as a function of frequency than the class of antennas which have a constant gain with frequency. The required transmitter power remains constant with frequency for the MCH antenna and increases with the square of the frequency for the constant gain antennas. While the development of the antenna is not

complete, it is ready for consideration by the system designers as a possible antenna element.

An article entitled "Helix Antennas Take Turn for Better", written by Carl W. Gerst and Robert A. Worden from the Syracuse University Research Corporation (SURC), was published in the August 22, 1966 issue of Electronics. This article, which describes some of the theory and experimental results obtained on some UHF and microwave models of the MCH, is included as an attachment to this report.

SECTION II

EXPERIMENTAL RESULTS

Experimental testing to verify the theoretical performance of the MCH antenna was conducted using models constructed at microwave frequencies. The models tested included both contrawound and non-contra wound antennas with the number of windings (N) equal to four and eight and having a wide range of pitch angles. The experimental results cover the bandwidth, pattern, beamwidth and impedance of the antenna.

1. BANDWIDTH

In Figure 1 is shown the theoretical curve of normalized helix circumference (C_λ) as a function of helix pitch with experimental points superimposed. It can be seen from Figure 1 that the experimental results agree very closely with the theoretical curves. However, the experimental boundaries are approximately 25% lower than the corresponding theoretical curves. This is due to rounding of the intersections in the Brillouin k-β diagram (Figure 8).

Since the radiation pattern can be modified both by antenna length and the feeding arrangement in a relatively independent manner, the antenna pattern was not considered in the definition of bandwidth. Instead, the experimental test set up shown in Figure 2 was used. The feed network shown has two input ports and four output ports which feed the four windings of the quadrafilar helix. Power fed into one of the input ports of the network excites right hand circular (RHC) polarization on the helix, and power fed into the other input port excites left hand circular (LHC) polarization on the helix. At the opposite end of the helix, an identical feed network is connected in such a fashion that energy not radiated when the helix is excited for RHC polarization

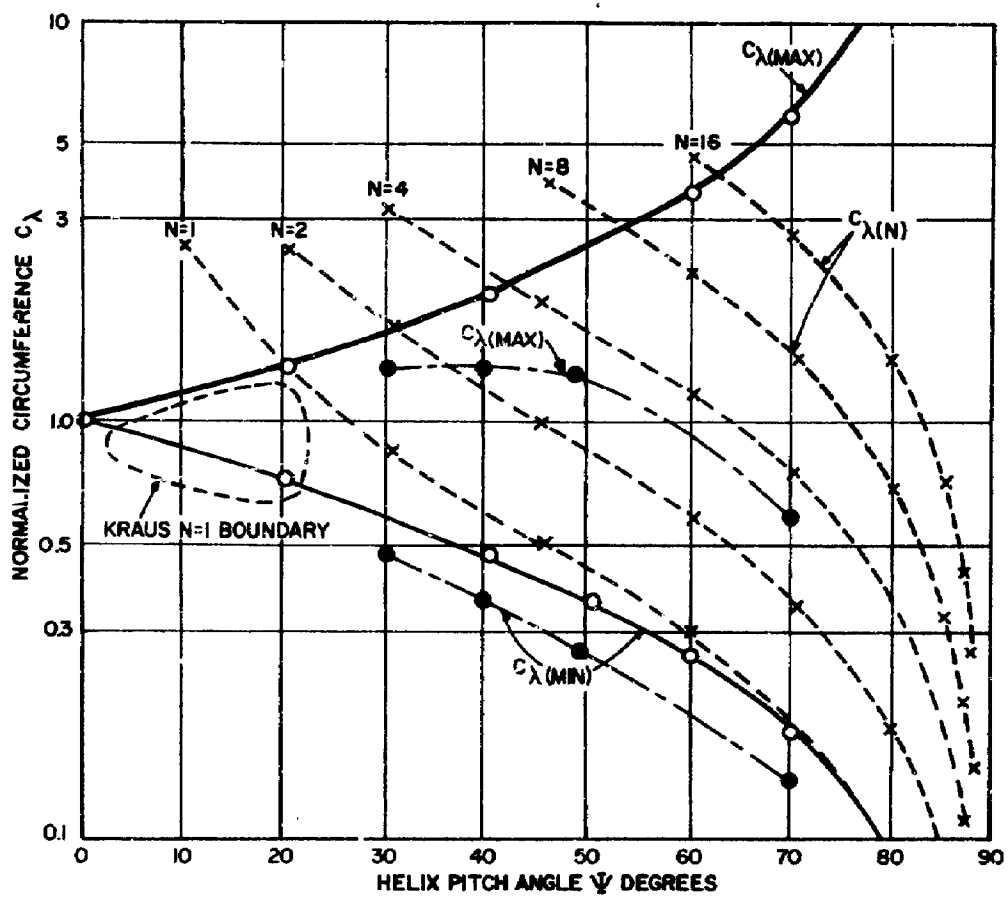

FIGURE 1. THEORETICAL AND EXPERIMENTAL (N=4 ONLY) RADIATION BOUNDARIES FOR MULTIFILAR HELICES SHOWING NORMALIZED HELIX CIRCUMFERENCE AS A FUNCTION OF PITCH ANGLE WITH NUMBER OF WINDINGS (N) AS PARAMETER

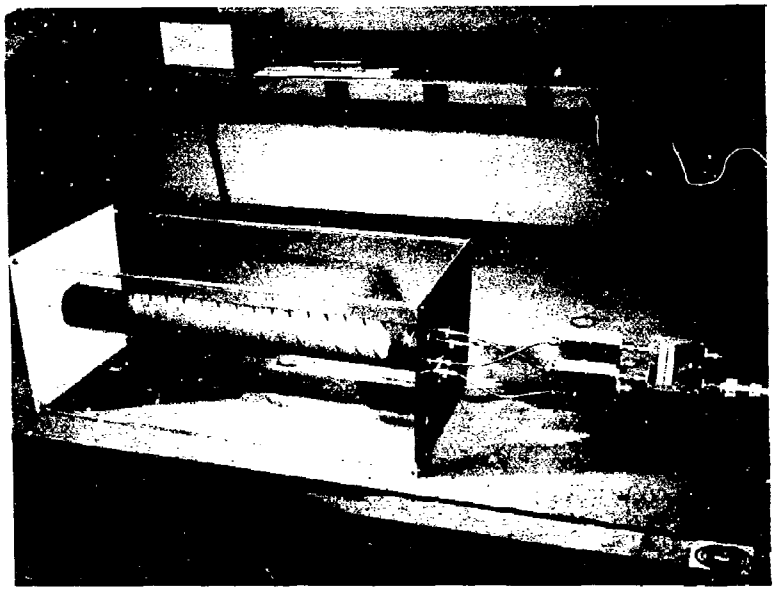

FIGURE 2. EXPERIMENTAL SET-UP FOR MEASUREMENT OF QUADRIFILAR ANTENNA TRANSMISSION AND RADIATION.

appears at the RHC port and energy not radiated when the helix is excited for LHC polarization appears at the LHC output port. The LHC and RHC output ports of the output feed network are terminated in their characteristic impedance. A power meter then is used to measure the power delivered to the output termination.

The helix used in making the measurements was a non-contra-wound helix. When the helix is excited with the opposite polarization sense from which it is wound (i.e., LHC feed to an RHC helix and vice versa), the helix acts as a transmission line. This is referred to in this report as the non-radiating mode, as contrasted to radiating mode in which the helix is fed with the same polarization sense as the windings on the helix.

Figure 3 shows the power delivered to the termination, when the helix is excited in the radiating and non-radiating modes, as a function of normalized helix circumference for several pitch angles and helix diameters. From Figure 3 it is seen that the helix acts as a transmission line at low frequencies for both the radiating and non-radiating modes of operation. As the frequency is increased in the radiating mode, the power reaching the termination abruptly decreases and the antenna radiates. The frequency at which this occurs is defined to be the lower frequency limit of the antenna radiating range. As the frequency is further increased, the antenna continues to radiate until an upper frequency is reached at which end-fire radiation abruptly ceases. This frequency is defined as the upper frequency limit of the antenna radiating range. The normalized circumference as a function of pitch angle for the quadrafilar helix is plotted for comparison in Figure 1. As mentioned earlier the bandwidth agreement was good, but the frequency range was approximately 25% lower than the theoretical value.

Figure 3 also shows that the helix behaves as a transmission

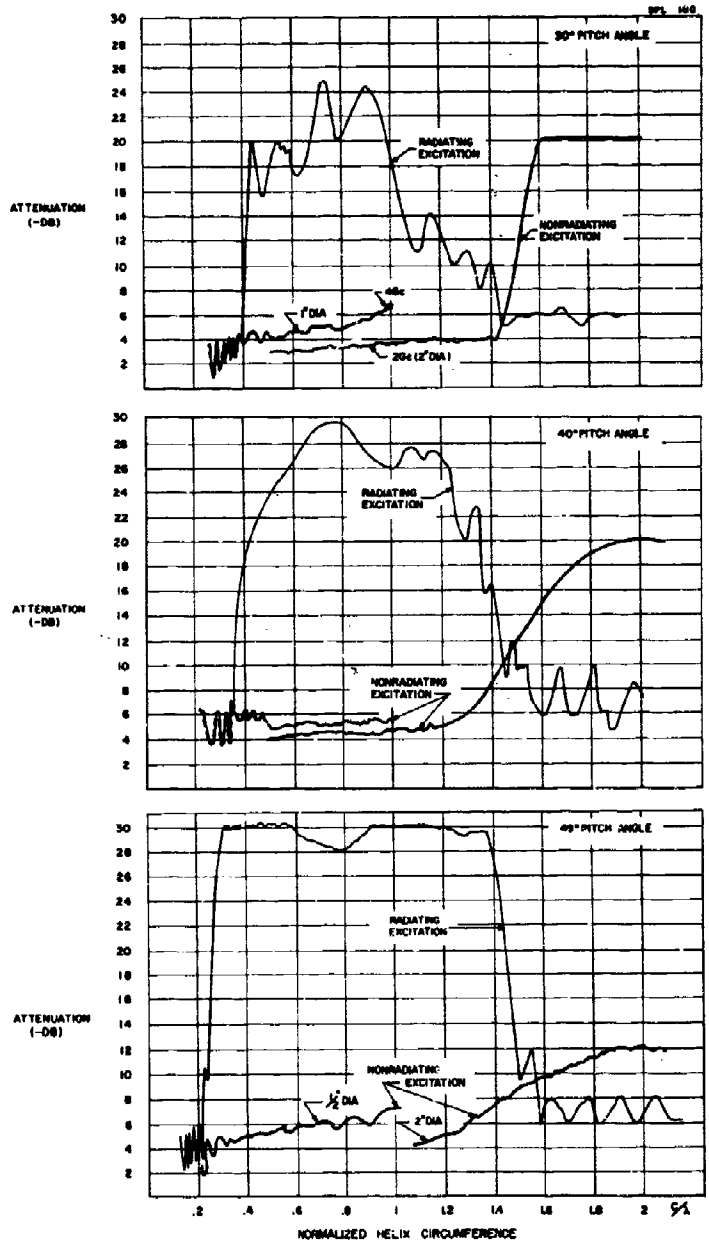

FIGURE 3. NON-CONTRAWOUND HELIX TRANSMISSION CHARACTERISTICS FOR RADIATING AND RADIATING EXCITATION

line when excited in the non-radiating mode, with the losses increasing as the frequency increases. An abrupt change in the losses occurs at C/λ of about 1.4 for the helix with 30° pitch angle. In the region of the abrupt change the antenna is radiating in the backfire mode. As the frequency of excitation is increased, the antenna is being excited in a "forbidden" region for end-fire radiation on the k-β diagram of Figure 8B, and the antenna radiates in a mode other than end-fire. The pattern becomes quite scalloped at this frequency.

While the attenuation versus C/λ for the radiating mode shows considerable variation, it should be remembered that this represents only very minor variations in radiation efficiency. For example, when the attenuation varies ± 3 db at 20 db, the efficiency might be varying between 98 to 99.5%, which represents a very small percentage change in radiation efficiency.

2. ANTENNA PATTERNS

Antenna patterns for a quadrafilar non-contrawound helix with a 30° pitch angle, 20 inch winding length, and one inch diameter are shown in Figures 4A and 4B. In the vicinity of ka_{min} (or C/λ) = .44 the phase velocity along the helix decreases sharply, the group velocity increases to unity and the antenna radiates end-fire. For values less than .44 the antenna tends to radiate back-fire. At values between about .47 and 1.4 the antenna radiates in the normal end-fire mode.

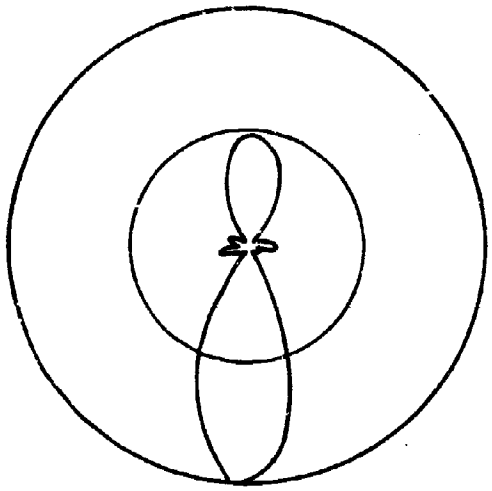

F = 1.5 GHz

C_λ = .375

Gain = −8db

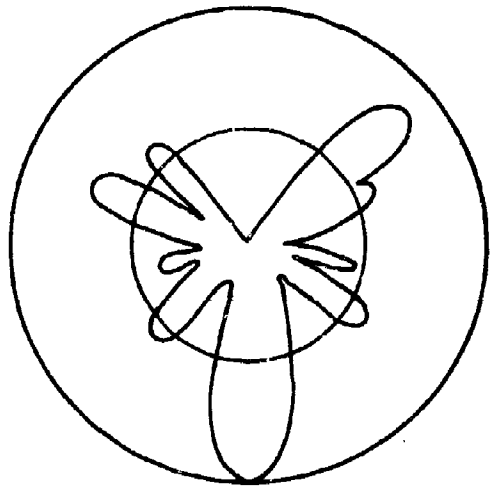

F = 1.6 GHz

C_λ = .40

Gain = −8db

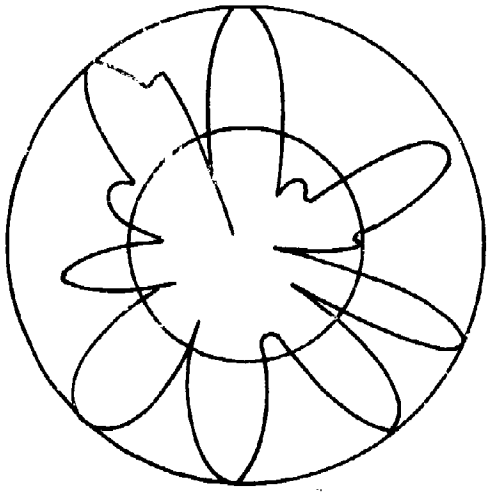

F = 1.76 GHz

Gain = 0db

C_λ = .44

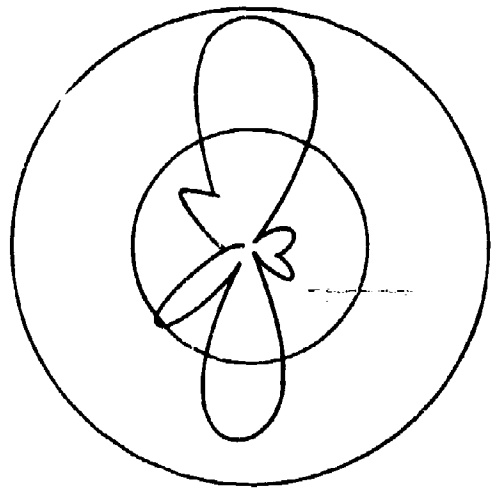

F = 1.80 GHz

Gain = +3db

C_λ = .45

FIGURE 4a

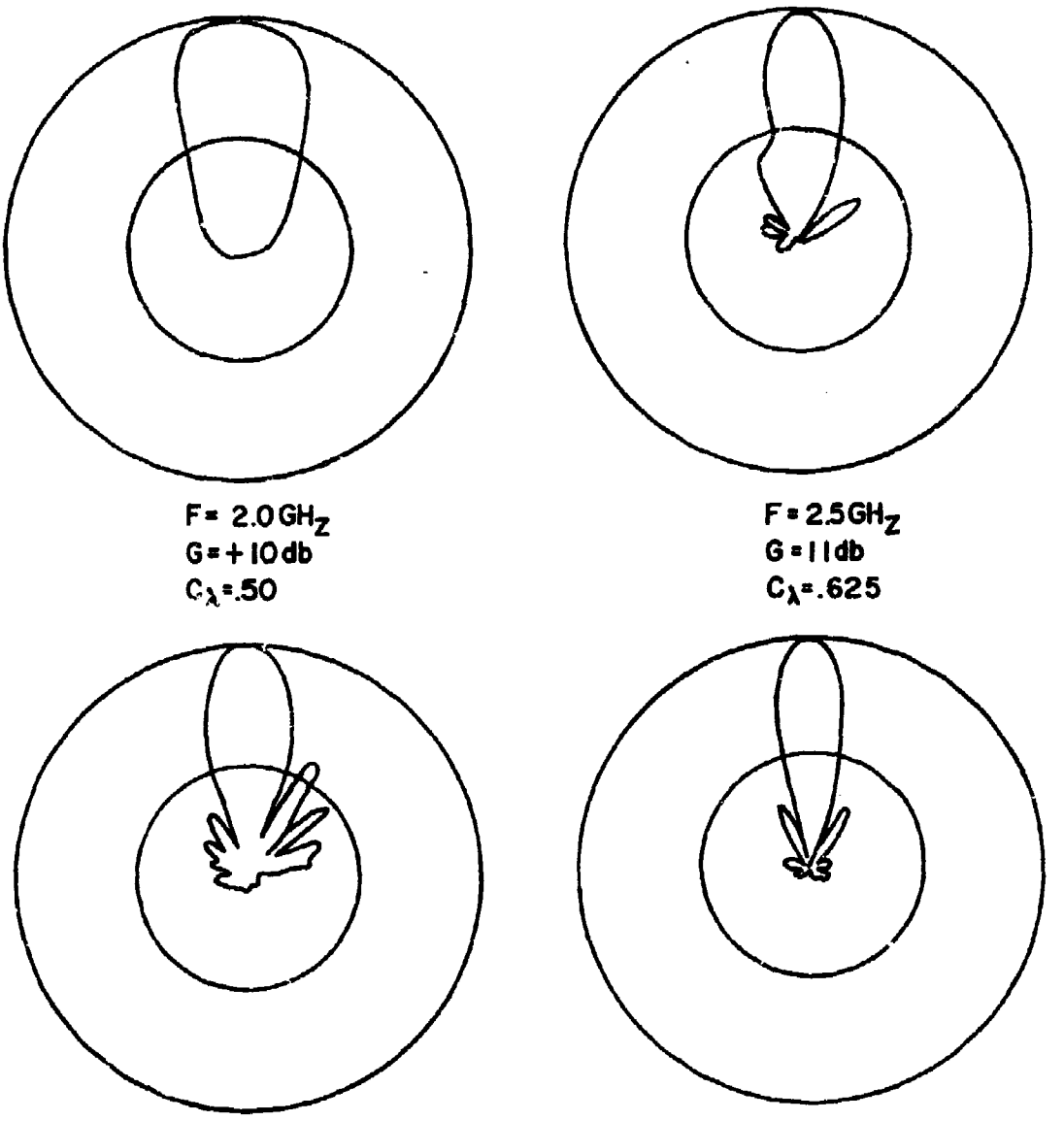
F = 2.0 GHz
G = +10 db
C_λ = .50
F = 2.5 GHz
G = 11 db
C_λ = .625
F = 3.5 GHz
C_λ = .87
F = 3.95 GHz
C_λ = 1.0

FIGURE 4B

3. ANTENNA BEAMWIDTH

The half power beamwidth versus normalized antenna length is plotted in Figure 5 for a non-contrawound quadrifilar with a 30° pitch angle. The half power beamwidth of this antenna varies approximately as the Hansen Woodyard condition for increased directivity.

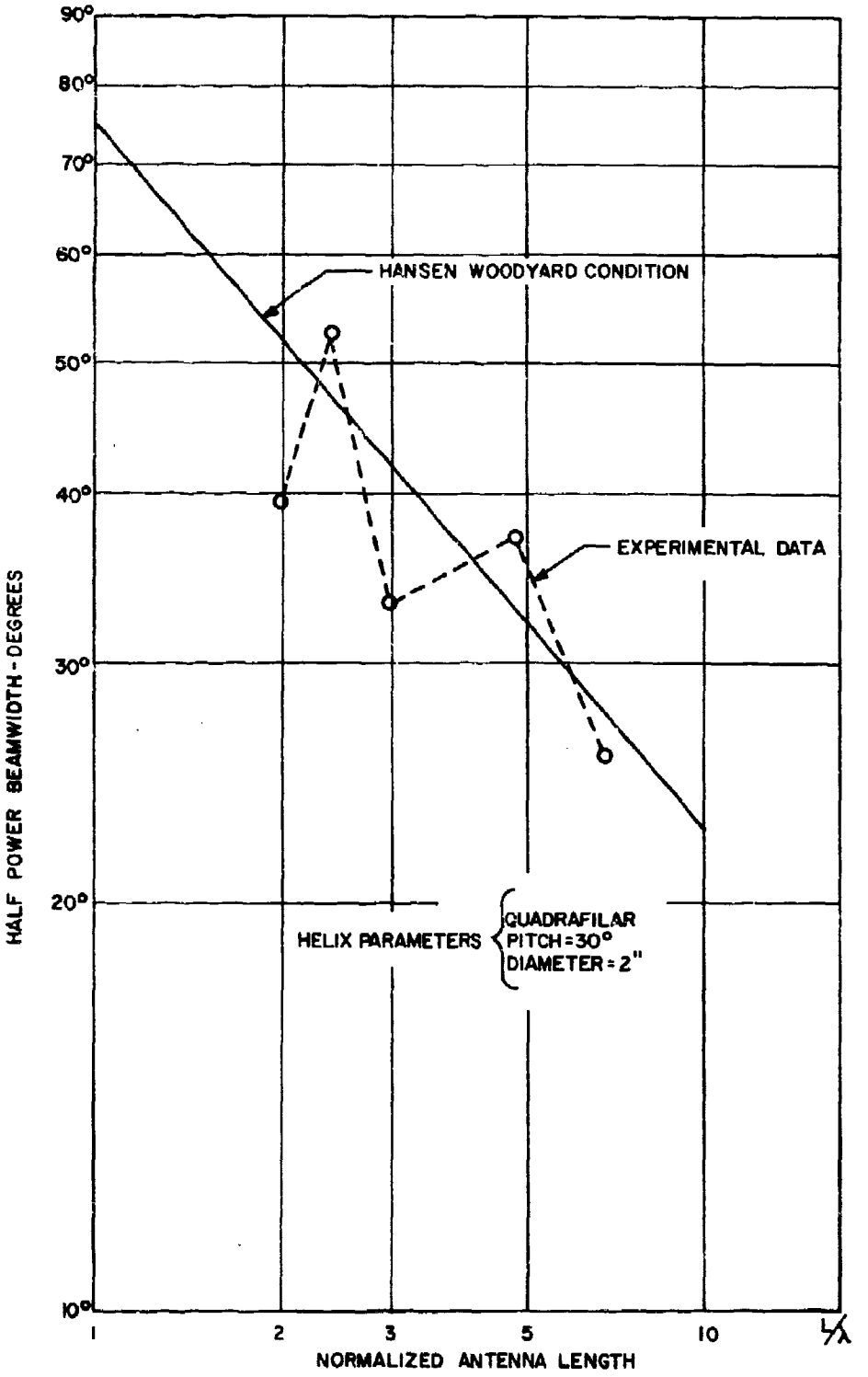

FIGURE 5. HALF POWER BEAMWITH VS ANTENNA LENGTH

4. IMPEDANCE

In Figure 6 is shown typical curves of VSWR relative to 50 ohms as a function of normalized helix circumference. In some ranges of C_λ, curves are shown for two different helix diameters (and operating frequencies). The solid lines are for the higher frequency. In the radiating range, the periodic variations in VSWR can be attributed to the isolation (22 db) of the feed networks. Allowing for this, the input match to the helix gives a VSWR of 2.7. This corresponds to a helix impedance of about 135 ohms. This characteristic impedance is independent of both the number of windings (N) and the normalized helix circumference (C_λ). Below the radiating band the antenna is severely mismatched. Above the radiating band it is matched due to a combination of the radiating mode radiating non-end-fire and the non-radiating mode radiating back-fire. In the radiating band, when the antenna is excited in the non-radiating mode, the energy reflected from the open end of the helix is in the proper phase sequence to constitute radiation mode excitation thus presenting a matched load to the sources.

It was observed experimentally that the input impedance to a helix is identical for both the radiating and non-radiating modes. This apparent paradox is discussed in Section III.

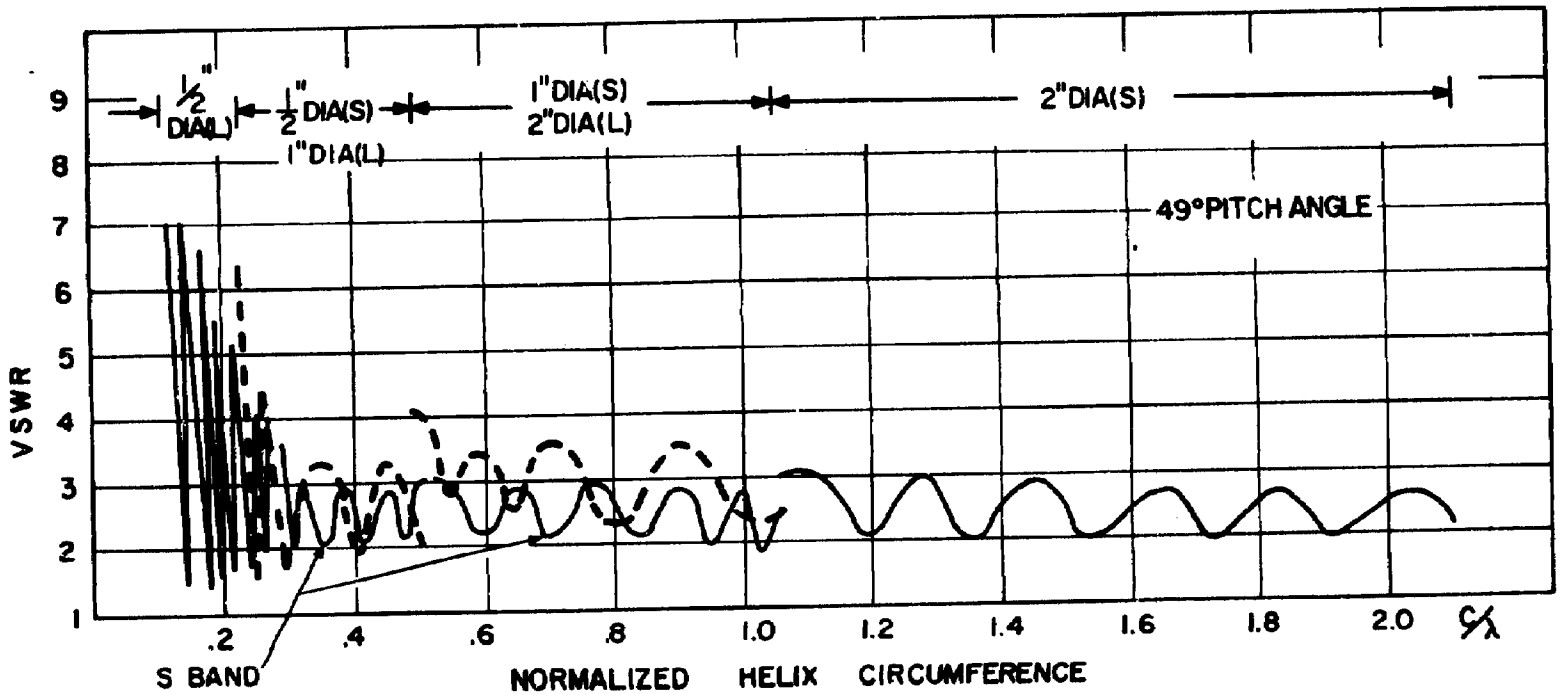

FIGURE 6. INPUT VSWR REFERENCED TO 50Ω AS A FUNCTION OF NORMALIZED HELIX CIRCUMFERENCE

SECTION III

FEED TECHNIQUES FOR SUPPRESSION OF UNWANTED COUPLED MODES ON THE MCH

1. THEOREM: EQUALITY OF IMPEDANCE OF SYMMETRICAL SYSTEMS LEFT HAND CIRCULAR (LHC) AND RIGHT HAND CIRCULAR (RHC) EXCITATION

In Figure 7 is shown a feed network which is capable of generating the proper phase sequence (across ports 1 through 4) to excite the quadrafilar MCH. Excitation at the port labeled LHC generates the phase sequence to excite the MCH to radiate left hand circular polarization, while excitation at the port labeled RHC generates the proper phase sequence to excite the MCH tc radiate right hand circular polarization.

When the RHC input is being excited, any reflection occuring at the output of the feed network regardless of what type of load causes it, provided it is a symmetrical load, will be reflected back through the feed network and appear at the LHC input port, and vice versa. Thus, independent of the system being fed by the four output ports, provided symmetry is maintained, the input impedance at the LHC port is always equal to the input impedance at the RHC port by reciprocity. This result is true for any output N greater than or equal to 3.

2. IMPEDANCE PARADOX OF NON-CONTRAWOUND HELIX

In Section II, it was mentioned that both the radiating and non-radiating modes of excitation present identical input impedances. The fact that this takes place is direct evidence in support of the preceeding theorem. To understand why the input impedance is the same for both modes of excitation it is first necessary to understand

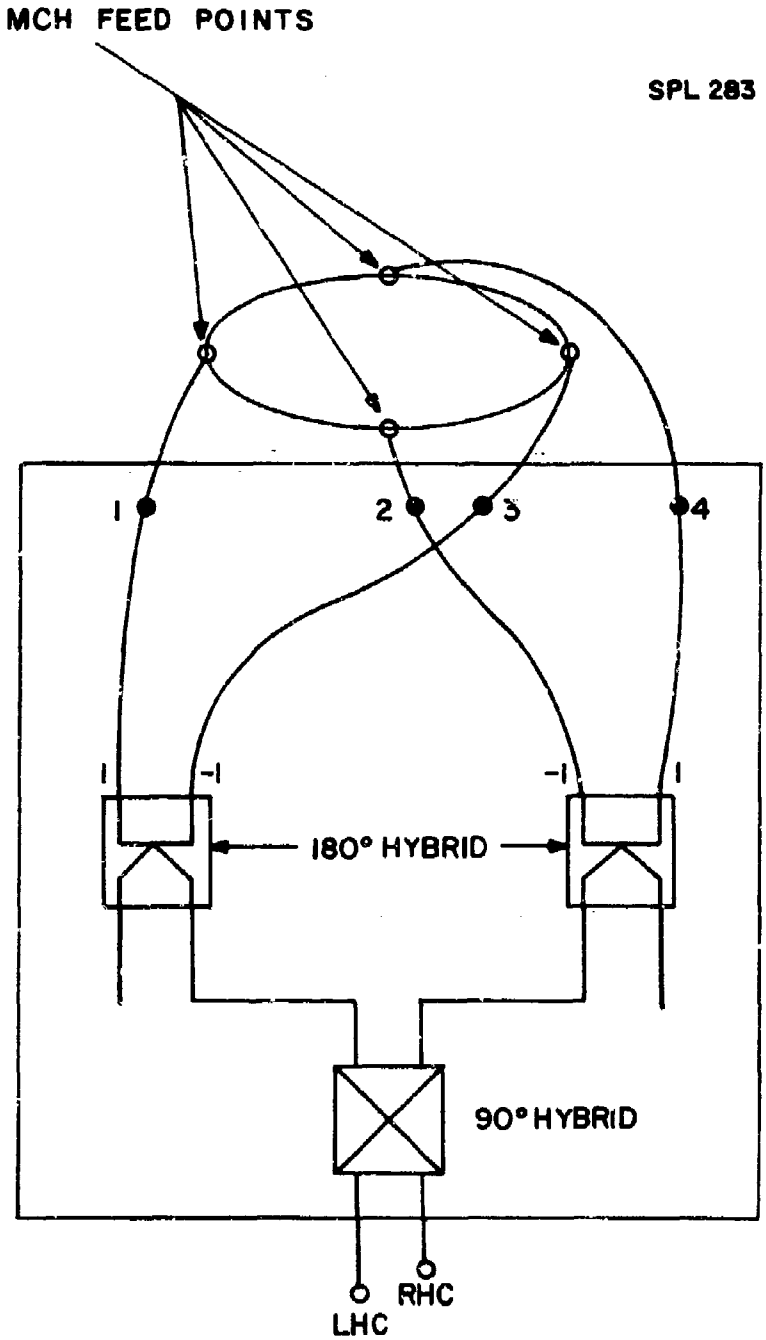

FIGURE 7. FEED NETWORK FOR LEFT AND RIGHT HAND CIRCULAR POLARIZATION

where the energy in the non-radiating mode is dissipated. To do this we must resort to a new Brillouin k-β diagram, constructed especially for the non-radiating excitation. This is shown in Figure 8b . In Figure 3a is the k-β diagram for the radiating mode. In both diagrams, β is measured along the axis of the helix rather than along the conductors of the helix.

In Figure 8a the solid line indicates the course of the propagation characteristic for the radiating mode as the frequency is increased. Part 1 of this solid curve is the frequency range below that for which end-fire radiation takes place. Part 2 of the curve is the end-fire radiation range where the energy when excited in the radiating mode couples to an infinite free-space plane wave and radiates. Throughout part 3 of the curve (if it exists which is dependent on the pitch angle), the helix simply behaves as a transmission line. Part 4 is a region where non-end-fire radiation can occur.

In Figure 8b the solid line indicates the course of the propagation characteristic for the non-radiating mode. Consider the particular value of (ka)' shown. At this frequency a forward travelling wave is located at point 1. If the far end of this antenna were terminated with its characteristic impedance, all of the input energy would be recovered in this termination. Since the termination is not used with an operating antenna, the energy is reflected back toward the generator with the propagation characteristic shown at point 2. An examination of the phase sequence of the reflected voltage present at the four windings of the helix shows that this sequence is that required to excite the helix in the radiating mode, at the remote end, and therefore the helix radiates in the backward direction.

A pattern showing the backfire radiation from point 2 of Figure 8b is shown in Figure 9 . The antenna is a non-contrawound quadrafilar helix with a 2 inch diameter. A 4 inch ground plane was used at the

SPL 284

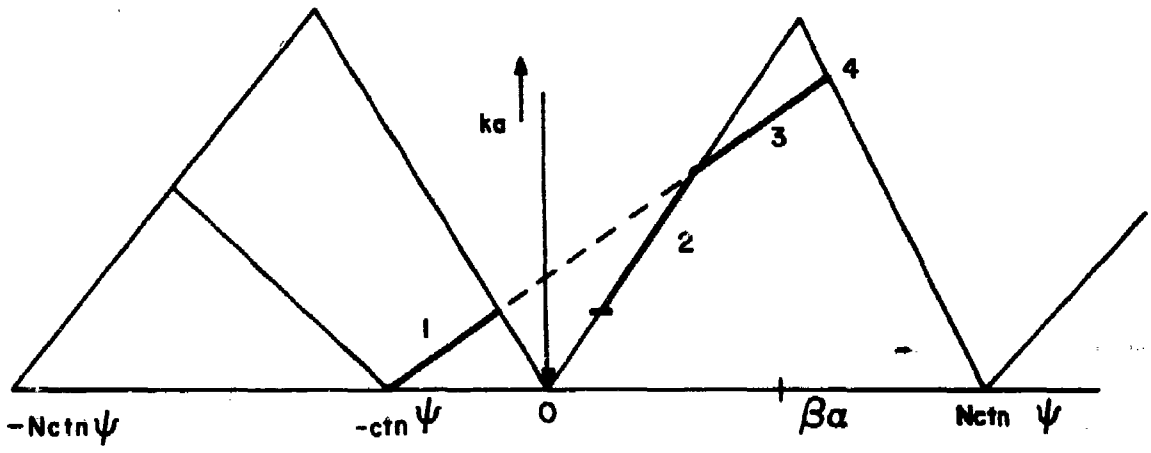

FIGURE 8A. BRILLOUIN K-β DIAGRAM FOR THE RADIATING MODE

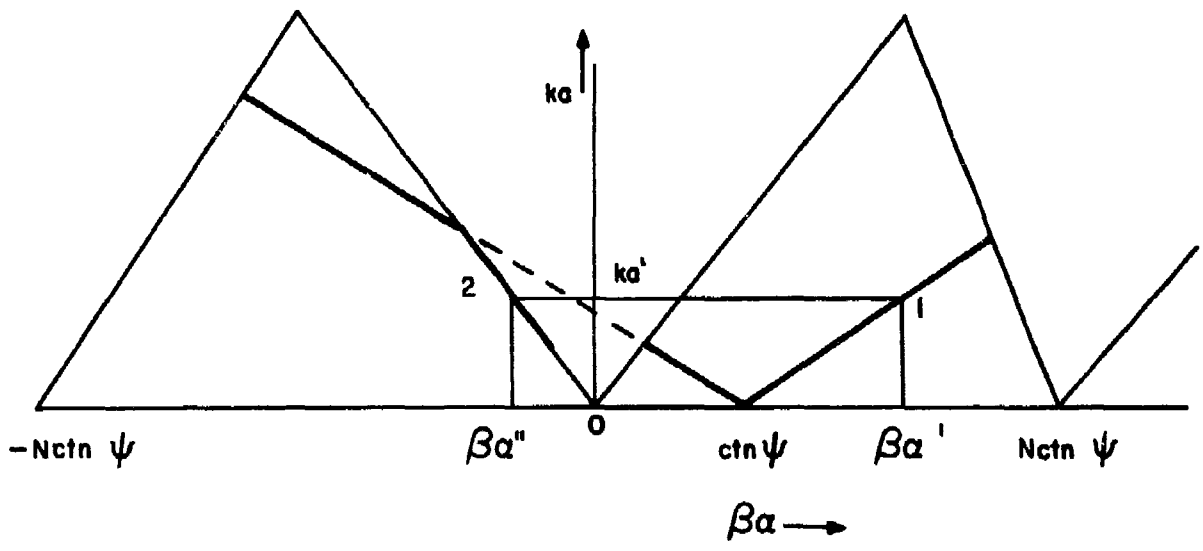

FIGURE 8B. BRILLOUN K-β DIAGRAM FOR THE NON-RADIATING MODE

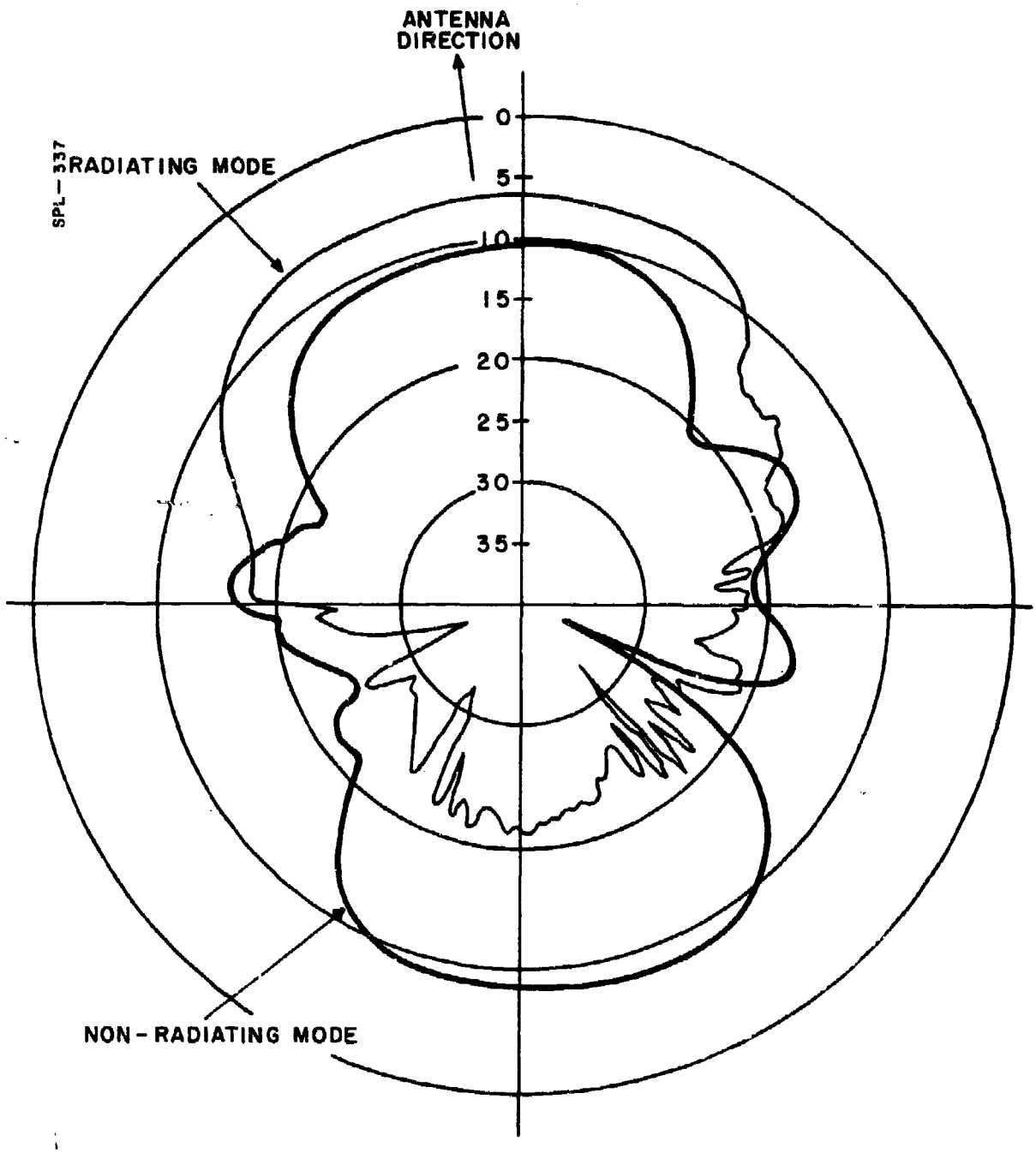

FIGURE 9. PATTERNS OF THE RADIATING AND NON-RADIATING MODES FOR A NON-CONTRAWOUND QUADRIFILAR ($f = 1.0$ GHz, $D = 2''$ $c/\lambda = 0.5$)

feeding plane of the antenna. The patterns of Figure 9 were taken at 1 GHz ($C/\lambda = .5$). The front to back ratio of the radiating mode is about 17 db. The non-radiating mode which radiates backfire is shown in Figure 9. The front to back ratio of this backfire mode is only 2 db because of the scattering from the ground plane at the excitation of the helix.

The backfire radiation accounts for the energy loss which occurs when the helix is excited by a "non-radiating" mode. Thus, a non-contrawound helix will radiate in the forward direction when excited by a "radiating mode", and will radiate in the backward direction when excited by the "non-radiating" mode (unless the end of the antenna is terminated). The question then becomes one of how to excite the contrawound helix to prevent backfire radiation. Several methods are discussed in the Feed Techniques Section which follows.

3. FEED TECHNIQUES FOR CONTRAWOUND MULTIFILAR HELICES

a. Direct Feed -- Right and Left Hand Windings Connected at the Feed Points

The antenna configuration for this type of feed which is shown in Figure 7 is attractive because of its inherent simplicity in the case of linear polarization. For linear polarization a simple balun can be used to excite either a quadrafilar or a hexafilar contrawound helix. A balun may be used to excite an octafilar helix, by feeding two consecutive windings from one leg of the balun and the opposite two consecutive windings from the remaining leg of the balun (i.e., 180° out of phase). This amplitude distribution is the equivalent to the super-position of two separate excitations, one the correct excitation and the other an excitation of the 3rd spatial harmonic at a relative power level of -8.34 db. The energy from this second excitation is either radiated in the sidelobe region or is reflected back into the feed network.

The input impedance of the left and right hand windings are identical for any excitation which is a linear combination of LHC and RHC (aforementioned theorem). The result is that with this type of feed, energy can not be preferentially fed to either set of windings. For example, consider the case of a RH helix excited with RHC polarization. Half of the energy would travel down the right hand windings on a fast wave which would radiate in the end-fire direction. The other half of the energy would travel down the left hand windings as a right hand circularly polarized slow wave which does not radiate in the forward direction.

This equal split between a fast wave which radiates and a slow wave which does not radiate occurs independent of the excitation polarization. This slow wave energy should be absorbed at the far end of the antenna to prevent it from being radiated in the backward direction, radiated in the forward direction with an erroneous phase, or reflected back into the feed network.

b. Direct Feed -- Right and Left Hand Winding Isolated

Since the RHC and LHC windings are electrically isolated two separate circularly polarized feeds are required. A feed network for a quadrafilar contrawound helix with the isolated windings is shown in Figure 10. This type of feed has the added advantage that the both windings will appear matched to the transmitter because any reflections are absorbed in the feed network.

Although this type of feed does not launch energy in an undesired

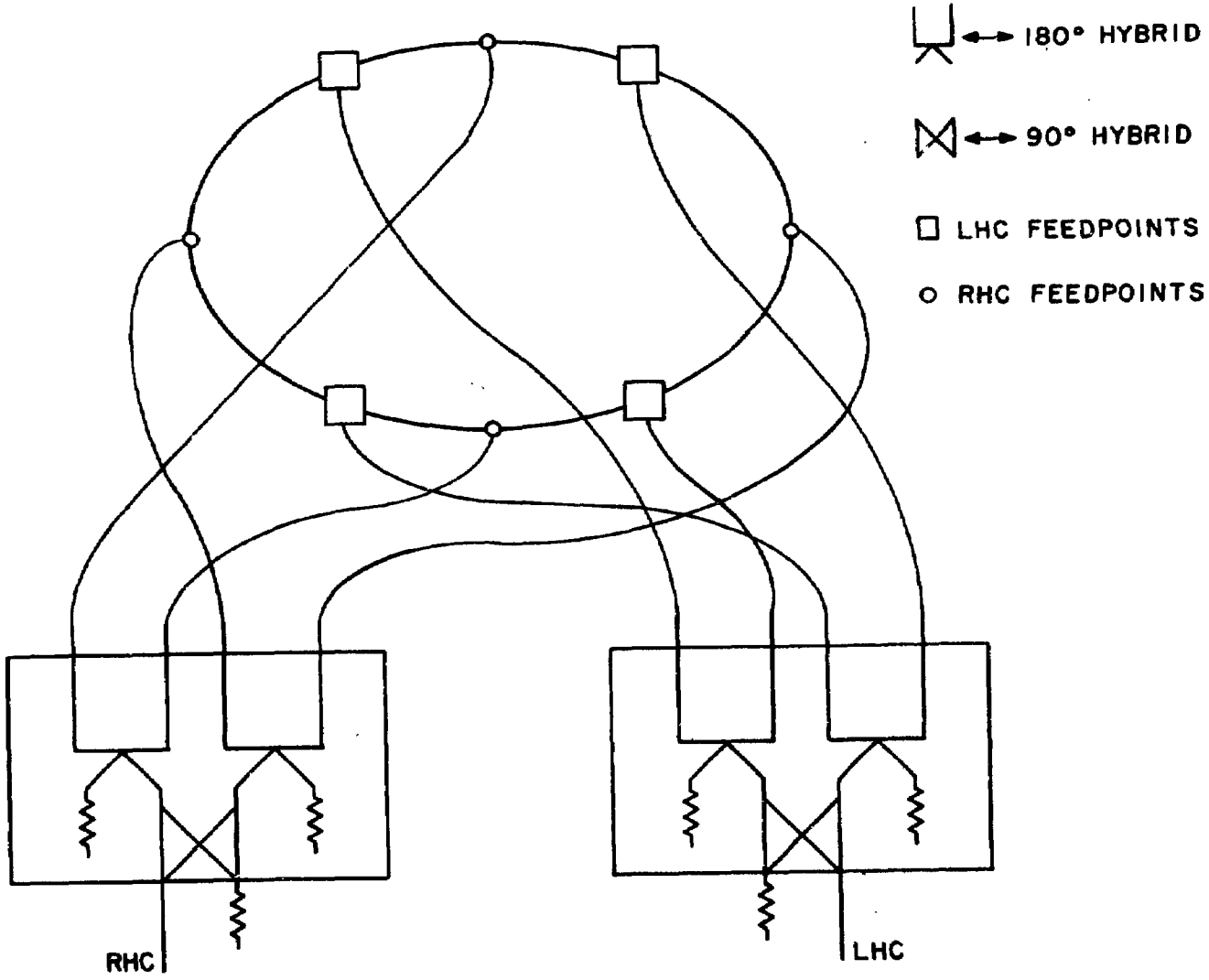

FIGURE 10. FEED NETWORKS FOR SEPARATED LEFT AND RIGHT HAND QUADRIFILAR HELICES

mode, coupling to these modes has been observed. At this time it is believed that the coupling is due to structural asymmetry. In this respect tolerance appears to be much more critical for the contrawound helices than for the non-contrawound helices.

c. Distributed Feed

The distributed feed for the multifilar contrawound helix is shown in Figure 11. A multiwire transmission line runs along the center of the antenna. The fast wave on the transmission line couples to the fast wave helix mode which in turn couples to the free space radiating mode. The multiplicity of windings in the transmission line system is used to suppress the θ harmonics. Hence the ultimate bandwidth of the antenna will be determined by the number of wires in the transmission line system. The number of modes which can be suppressed is N-1 out of N possible modes, where N is the number of transmission lines. Many more windings can be used on the helix since the feed complexity is no longer related to the number of helices wound in a given direction. This type of feed has several possible advantages:

1. Amplitude control along the axis throughout the coupled region should improve the sidelobe suppression.

2. There is the possibility of controlling the amount of super gain in Z-direction by controlling the length of the coupled region.

3. The number of helices in a given direction can be much higher than the number of feed lines. This should produce a more symmetrical pattern.

d. General Comparison of Feed Techniques for Contrawound Multifilar Helices

Of the three types of feed considered, the distributed feed looks most promising. This type of feed has been investigated briefly

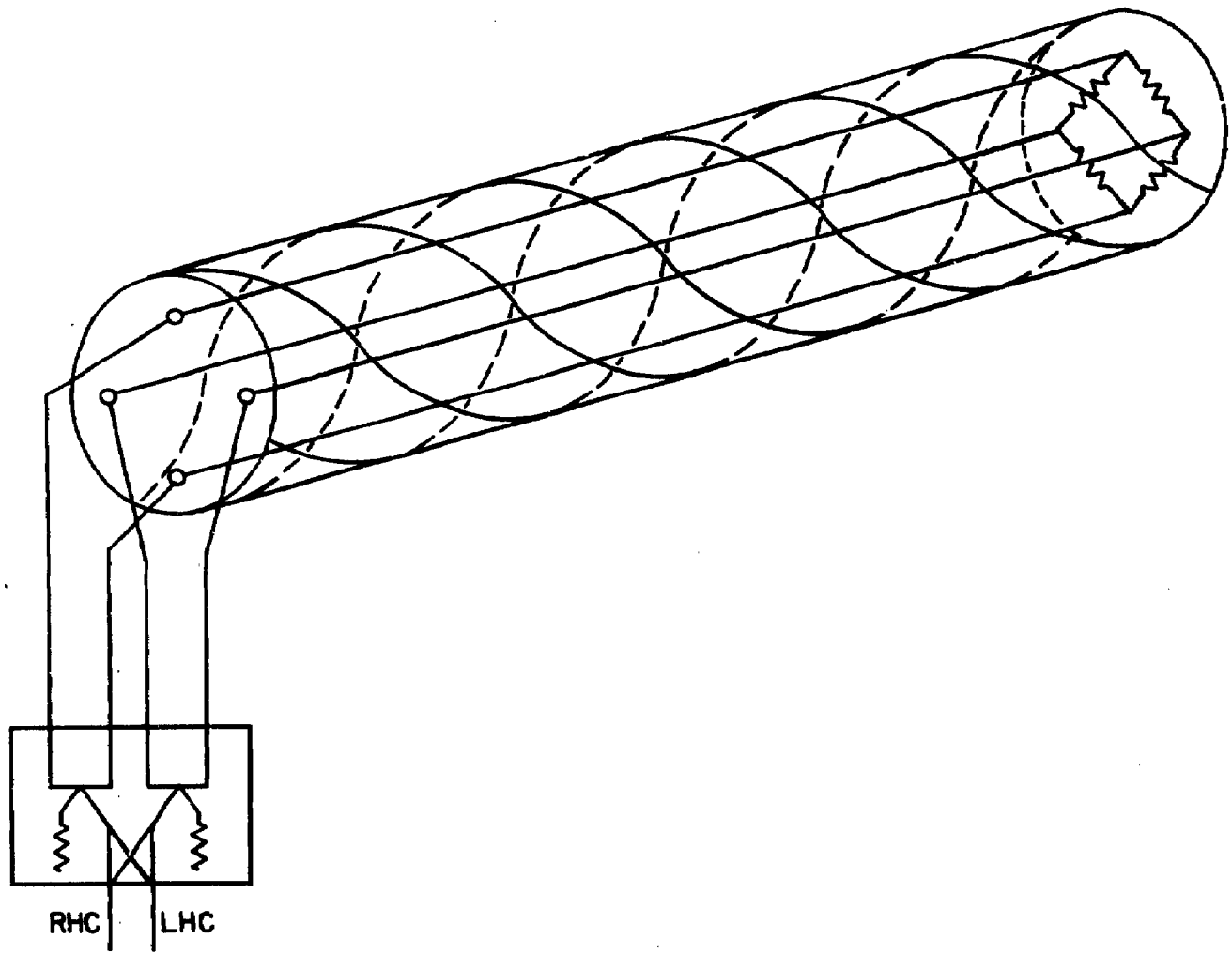

FIGURE 11. MULTIWIRE TRANSMISSION LINE FEED FOR A MULTIFILAR CONTRAWOUND HELIX

both theoretically and experimentally. At this point the only concrete statement that can be made is that the distributed feed looks very promising.

The direct feed with isolated windings couples only to fast waves, but requires the most complicated feed network of the three types considered. However there is a fringe benefit since the input terminal is matched independent of the antenna VSWR.

The direct feed with common feed points puts half of the energy into a slow wave which is either dissipated or radiates in a direction which would degrade wideband patterns.

SECTION IV

THE APPLICATION OF A MCH ANTENNA TO THE OVERALL OHR SYSTEM

An adequate OHR system will need a wideband (≈ 10 to 1 frequency range) steerable array. The wideband steerable array problem can be broken into two general areas (1) the wideband element and (2) the arraying of the elements to produce a single steerable beam. These two areas are by no means isolated. In fact the arraying technique will depend heavily upon the mutual impedance and capture area characteristics of the element as a function of frequency.

In general, available broadband antenna elements fall into one of two classes; those whose gain is constant with frequency (such as the log-periodic) and those whose gain is directly proportional to frequency (such as the rhombic and now the MCH). Since the relationship between antenna gain and receiving aperture is

$$A = \frac{G\lambda^2}{4\pi} = \frac{Gc^2}{4\pi f^2}$$

the aperture of the constant gain antenna will be

$$A_{cg} = \frac{K_1 c^2}{4\pi f^2}$$

and the aperture of the antenna whose gain varies linearly with frequency will be

$$A_f = \frac{K_2 c^2}{4\pi f}$$

While the rhombic antenna falls into the same general classification as the MCH in terms of gain as a function of frequency, it does not perform well over the wide frequency range of interest. Therefore, the availability of the MCH provides the wideband array designer with a choice between two classes of wideband elements.

The wideband array designers problem consists of grating lobes and/or lack of coverage at the high frequency end of the band, and mutual impedance problems at the low frequency end of the band. The type and size of the element chosen will tend to accentuate the problem at either the high or low frequency end of the band.

Consider for a moment the problems associated with the familiar equally spaced linear array. The array designer could eliminate the mutual impedance problem and the grating lobe if he could obtain a wideband constant capture area antenna. (Realizing, of course, that this type of element does not presently exist, we are merely pointing out the magnitude of the designers problem even if he could obtain such an element). The problem with the constant capture area antenna is that the field of view would be greatly reduced at the high frequency end, since the gain of the element is proportional to f^{+2}, and hence the field of view in both elevation and azimuth would collapse at a rate which is proportional to frequency.

To counter the reduction in the field of view, the array designer might chose a constant gain antenna which has a capture area that varies as f^{-2}. Here the field of view is constant as a function of frequency. Now the wideband array designer will have either grating lobe problems at the high frequency end or element mutual impedance problems at the low frequency end. The blank spaces between elements due to the reduction in capture area with increasing frequency will cause grating lobes at the high frequency end. If the elements are pushed closer together to combat this phenomenon, the capture areas will overlap at the low frequency ends causing mutual impedance problems.

Since the MCH capture area is inversely proportional to frequency and its gain is directly proportional to frequency, this antenna has characteristics which are half way between the constant gain antenna and the constant capture area antenna. This antenna by no means solves the problem of the wideband uniformly spaced array. It has a little of the two previous problems, namely: 1) field of view contraction ($f^{-\frac{1}{2}}$) and 2) the grating lobe mutual impedance trade-offs.

This little exercise was conducted merely to point out that the wideband array designer has a problem even if he could dictate the type of wideband element that is required. It also points out that the uniformly spaced linear array does not look promising as a wideband array.

Either a non-uniformly spaced linear array or a uniform circular array will suppress the grating lobes. If this type of array could be made to work, the uniform gain element would look more attractive since its field of view is constant. But going one step further to the radar range equation, we see that the returned power

$$P_R = \frac{P_T G_T \sigma A_R}{(4\pi)^2 R^4} = K C_T A_R \sigma$$

is proportional to the product of antenna gain and capture area times the radar cross-section. Hence the minimum required $P_T G_T A_R$ product will depend upon the radar cross-section as a function of frequency. If the size of the target is comparable to the wavelength, the radar cross-section, σ, will be relatively independent of frequency (the target is out of the Rayleigh region). Hence the system with the constant gain antenna and constant target area will be overdesigned in terms of received power

at the low frequency end of the spectrum since the $G_T A_R$ product is inversely proportional to the frequency squared. Power requirements of the system with the MCH antenna and constant target area are independent of frequency since the $G_T A_R$ product is constant.

The above discussion points out that the wideband array designer has more trade-off to consider and hence a better chance of success if he has more than one wideband element to choose from. Although the state of development of the MCH lags far behind that of the broadband constant gain antennas such as the log-periodic, it has reached the point that the MCH should be included in the wideband array designers inventory of possible wideband elements.

SECTION V

CONCLUSION

The theoretical predictions for the non-contrawound multifilar helical antenna were confirmed experimentally. The overall agreement was very good. Although the coupling between helical mode and the radiating free space mode caused a bending in the Brillouin k-β diagram. The net result is that the band width predictions are correct but the diameter of the helix must be reduced by 25% from that predicted by the first order theory.

Theoretically, there should be no coupling between contra-windings, because modes which have propagation constants which would permit coupling are orthogonal in θ, and modes which are not orthogonal in θ are orthogonal in Z . But it was observed experimentally that cross coupling occurred. The reason for this cross coupling appears to be structural asymmetries on the antenna and the feed points. This cross coupling can modify the polarization and pattern characteristics of the antenna. More work is required to determine to what extent reasonable tolerances can minimize this cross coupling. Therefore, it would be desirable to build a model in the 300 Mc region where the physical structures would be large enough to permit tighter percentage mechanical tolerances. Feed techniques such as the distributed feed should be investigated in greater detail to determine to what extent it might be possible to control patterns and cross coupling.

The development of the MCH antenna has progressed to the point where array designers should factor its properties into their thinking concerning future wideband arrays. The fact that the MCH antenna has a gain proportional to f and a capture area proportional to f^{-1} may or may not be an asset to the wideband array designer. But

it should surely be factored into his thinking rather than considering only constant gain antennas having capture areas proportional to f^{-2} The fact that the product of gain and capture area for the two types of antennas differ by a factor proportional to f^2 may be of significance to the wideband array design.

UNCLASSIFIED
Security Classification

DOCUMENT CONTROL DATA - R&D
(Security classification of title, body of abstract and indexing annotation must be entered when the overall report is classified)

1. ORIGINATING ACTIVITY (Corporate author) Syracuse University Research Corporation P.O. Box 26, University Station Syracuse, New York 13210	2a. REPORT SECURITY CLASSIFICATION UNCLASSIFIED 2b. GROUP N/A

3. REPORT TITLE
Surveillance Technology Study and Analysis

4. DESCRIPTIVE NOTES (Type of report and inclusive dates)
Final Report Oct 65 - Oct 66

5. AUTHOR(S) (Last name, first name, initial)
Widmann, L. Witehead, L.
Davis, R. Stauffer, J.
Gerst, C.

6. REPORT DATE May 1967	7a. TOTAL NO. OF PAGES 316	7b. NO. OF REFS 41
8a. CONTRACT OR GRANT NO. AF30(602)-3438 b. PROJECT NO. 5582 c. Task 558202 d.	9a. ORIGINATOR'S REPORT NUMBER(S) 9b. OTHER REPORT NO(S) (Any other numbers that may be assigned this report) RADC-TR-67-145 (Vol. I thru V)	

10. AVAILABILITY/LIMITATION NOTICES
This document is subject to special export controls and each transmittal to foreign governments, foreign nationals or representatives thereto may be made only with prior approval of RADC (EMLI), GAFB, N.Y. 13440

11. SUPPLEMENTARY NOTES Kenneth C. Stiefvater Project Engineer EMATS/AC 315 330-3445	12. SPONSORING MILITARY ACTIVITY Rome Air Development Center (EMATS) Griffiss AFB, N. Y. 13440

13. ABSTRACT
This report presents results of studies, investigations, and technique developments which will be useful in future HF long range radar applications. This report is in five volumes.

Volume I - This report covers the development of a multifilar helical contra-wound antenna which may be suitable as the wideband radiating element for large HF array antennas.

Volume II - This report evaluates the performance of an adaptive array operating in multipath environment. Comparisons between the cancellation performance of the array operating against coherent and incoherent interference is made.

Volume III - This report investigates the errors in the reconstruction of digitally recorded signals that are time truncated and band limited.

Volume IV - This report is intended to aid the radar engineer in design and evaluation of HF radar systems. Major emphasis is on signal processing techniques and their effect on detection probability.

Volume V - This report covers the development of a polarization monitor display for HF radar application.

DD FORM 1 JAN 64 1473

UNCLASSIFIED
Security Classification

UNCLASSIFIED
Security Classification

14. KEY WORDS	LINK A ROLE	LINK A WT	LINK B ROLE	LINK B WT	LINK C ROLE	LINK C WT
Helical antenna						
Adaptive array						
Sample reconstruction						
Signal processing						
Polarization monitor						

INSTRUCTIONS

1. ORIGINATING ACTIVITY: Enter the name and address of the contractor, subcontractor, grantee, Department of Defense activity or other organization *(corporate author)* issuing the report.

2a. REPORT SECURITY CLASSIFICATION: Enter the overall security classification of the report. Indicate whether "Restricted Data" is included. Marking is to be in accordance with appropriate security regulations.

2b. GROUP: Automatic downgrading is specified in DoD Directive 5200.10 and Armed Forces Industrial Manual. Enter the group number. Also, when applicable, show that optional markings have been used for Group 3 and Group 4 as authorized.

3. REPORT TITLE: Enter the complete report title in all capital letters. Titles in all cases should be unclassified. If a meaningful title cannot be selected without classification, show title classification in all capitals in parenthesis immediately following the title.

4. DESCRIPTIVE NOTES: If appropriate, enter the type of report, e.g., interim, progress, summary, annual, or final. Give the inclusive dates when a specific reporting period is covered.

5. AUTHOR(S): Enter the name(s) of author(s) as shown on or in the report. Enter last name, first name, middle initial. If military, show rank and branch of service. The name of the principal author is an absolute minimum requirement.

6. REPORT DATE: Enter the date of the report as day, month, year; or month, year. If more than one date appears on the report, use date of publication.

7a. TOTAL NUMBER OF PAGES: The total page count should follow normal pagination procedures, i.e., enter the number of pages containing information.

7b. NUMBER OF REFERENCES: Enter the total number of references cited in the report.

8a. CONTRACT OR GRANT NUMBER: If appropriate, enter the applicable number of the contract or grant under which the report was written.

8b, 8c, & 8d. PROJECT NUMBER: Enter the appropriate military department identification, such as project number, subproject number, system numbers, task number, etc.

9a. ORIGINATOR'S REPORT NUMBER(S): Enter the official report number by which the document will be identified and controlled by the originating activity. This number must be unique to this report.

9b. OTHER REPORT NUMBER(S): If the report has been assigned any other report numbers *(either by the originator or by the sponsor)*, also enter this number(s).

10. AVAILABILITY/LIMITATION NOTICES: Enter any limitations on further dissemination of the report, other than those imposed by security classification, using standard statements such as:

(1) "Qualified requesters may obtain copies of this report from DDC."

(2) "Foreign announcement and dissemination of this report by DDC is not authorized."

(3) "U. S. Government agencies may obtain copies of this report directly from DDC. Other qualified DDC users shall request through _____."

(4) "U. S. military agencies may obtain copies of this report directly from DDC. Other qualified users shall request through _____."

(5) "All distribution of this report is controlled. Qualified DDC users shall request through _____."

If the report has been furnished to the Office of Technical Services, Department of Commerce, for sale to the public, indicate this fact and enter the price, if known.

11. SUPPLEMENTARY NOTES: Use for additional explanatory notes.

12. SPONSORING MILITARY ACTIVITY: Enter the name of the departmental project office or laboratory sponsoring *(paying for)* the research and development. Include address.

13. ABSTRACT: Enter an abstract giving a brief and factual summary of the document indicative of the report, even though it may also appear elsewhere in the body of the technical report. If additional space is required, a continuation sheet shall be attached.

It is highly desirable that the abstract of classified reports be unclassified. Each paragraph of the abstract shall end with an indication of the military security classification of the information in the paragraph, represented as *(TS)*, *(S)*, *(C)*, or *(U)*.

There is no limitation on the length of the abstract. However, the suggested length is from 150 to 225 words.

14. KEY WORDS: Key words are technically meaningful terms or short phrases that characterize a report and may be used as index entries for cataloging the report. Key words must be selected so that no security classification is required. Identifiers, such as equipment model designation, trade name, military project code name, geographic location, may be used as key words but will be followed by an indication of technical context. The assignment of links, rules, and weights is optional.

UNCLASSIFIED
Security Classification