AD 813883

TECHNICAL REPORT
67-45-CM

DEVELOPMENT, FABRICATION AND PROOFTESTING OF OPTIMUM FOOT PROTECTION AGAINST ANTIPERSONNEL MINES USING A SUPPLEMENTARY DEVICE

by

E. S. Fujinaka and J. L. MacDonald

IIT Research Institute
Technology Center
Chicago, Illinois

Reproduced From
Best Available Copy

Contract No. DA19-129 QMC-379(N)

DDC
RECEIVED
MAY 19 1967
C

December 1966

UNITED STATES ARMY
NATICK LABORATORIES
Natick, Massachusetts 01760

Clothing & Organic Materials Division
TS-146

Best Available Copy

The findings in this report are not to be construed as an official Department of the Army position, unless so designated by other authorized documents.

Citation of trade names in this report does not constitute an official indorsement or approval of the use of such items.

Each transmittal of this document outside the agencies of the U. S. Government must have prior approval of the Director, Clothing and Organic Materials Division, U. S. Army Natick Laboratories, Natick, Mass.

DISPOSITION INSTRUCTIONS

Destroy this report when no longer needed. Do not return it to the originator.

The findings in this report are not to be construed as an official Department of the Army position, unless so designated by other authorized documents.

Citation of trade names in this report does not constitute an official indorsement or approval of the use of such items.

Each transmittal of this document outside the agencies of the U. S. Government must have prior approval of the Director, Clothing and Organic Materials Division, U. S. Army Natick Laboratories, Natick, Mass.

DISPOSITION INSTRUCTIONS

Destroy this report when no longer needed. Do not return it to the originator.

Each transmittal of this document outside the agencies of the U.S. Government must have prior approval of the Director, Clothing and Organic Materials Division, U. S. Army Natick Laboratories, Natick, Mass.

AD_____

TECHNICAL REPORT

67-45-CM

DEVELOPMENT, FABRICATION AND PROOFTESTING OF OPTIMUM FOOT PROTECTION AGAINST ANTIPERSONNEL MINES USING A SUPPLEMENTARY DEVICE

by

E. S. Fujinaka

J. L. MacDonald

IIT Research Institute
Technology Center
Chicago, Illinois 60616

December 1966

Project Reference:
1K6-43303-D547

Series: TS-149

Clothing & Organic Materials Division
U. S. ARMY NATICK LABORATORIES
Natick, Massachusetts 01760

FOREWORD

This report covers Phase II of the research program concerned with the fabrication of blast evaluation prototypes and the preliminary aspects of prototesting these prototypes. The period covered is from 1 February 1966 through 30 July 1966.

This report was prepared by IIT Research Institute under Contract No. DA 129-QMC-3[illegible](R) under the leadership of E. S. Fujinaka and J. L. MacDonald. Personnel from the Experimental Operations Section of IITRI contributed to the fabrication portion of the program. The contract was initiated under Project No. 1K6-43303-D547 and was administered under the direction of the Clothing & Organic Materials Division of the U. S. Army Natick Laboratories, with Mr. Douglas Swain and Mr. Edward W. Beeton acting as Project Officers.

S. J. Kennedy
Director
Clothing & Organic Materials Division

APPROVED:

DALE H. SIELING, Ph.D.
Scientific Director

W. M. MANTZ,
Brigadier General, U.S.A.
Commanding

CONTENTS

	Page
List of Figures and Tables	v
Abstract	vi
Introduction	1
PART I. REVIEW OF THE ANALYTICAL AND EXPERIMENTAL DATA USED IN THE DESIGN OF THE BLAST PROTECTIVE SUPPLEMENTARY DEVICE	1
PART II. FABRICATION OF FOOTWEAR	6
A. Concept A Fabrication Details	6
B. Concept B Fabrication Details	6
PART III. PRELIMINARY PROOFTESTING CONSIDERATIONS	15
References	19

LIST OF FIGURES

		Page
1	Aquarium Water Bath Experimental Configuration	3
2	A Section View of a Typical Protective Boot/Sabot Combined System	4
3	Concept "A" Sabot Prototype Shown Mounted on a DMS Protective Combat Boot	7
4	Concept "B" Sabot Prototype Shown Mounted on a DMS Protective Combat Boot	8
5	Pair of Concept "A" Sabot Elastomers with Molded-in-Place Shanks Shown Less Rubber Overshoe	9
6	Pair of Concept "B" Sabot Systems Complete with Upper Reinforcements and Shanks	10
7	Mold for Concept "A" Sabot Elastomer (Left Foot)	11
8	Mold for Concept "B" Sabot Elastomer (Left Foot)	12
9	Sabot Shank Used for Both Concepts A and B	13
10	Aluminum Alloy 2024-T3 Sabot Shank	14
11	Sabot Upper Reinforcement (Left Foot) Material: Aluminum Alloy 2024-0 Heat-Treated to 2024-T4 after Bending	16
12	Band for Sabot Upper Reinforcement, Aluminum Alloy 2024-T3	17

LIST OF TABLES

I	Tabulated Data on Blast Injury to Foot with a Sabot Supplementary Protective Device	5

ABSTRACT

This report covers Phase II of a program to develop a supplementary item of protective footwear to be used in conjunction with a previously developed protective combat boot. It was directed toward fabrication of test prototypes for blast evaluation. The supplementary devices were of two types, Concept A and Concept B, both using an identical solid aluminum shank. Concept B incorporated a system of reinforcement for the upper portion of the foot.

A discussion of preliminary prooftesting considerations is presented. This discussion includes the recommendation of test personnel, the quantity of tests, and the protective footwear to be used during tests.

PAGES NOT FILMED ARE BLANK

DEVELOPMENT, FABRICATION, AND PROOFTESTING OF OPTIMUM FOOT PROTECTION AGAINST ANTIPERSONNEL MINES USING A SUPPLEMENTARY DEVICE

Introduction

A variety of techniques for providing varying degrees of protection against antipersonnel (AP) land mines are available. It is possible to reinforce the combat boot or provide some form of supplementary protection. This report covers the fabrication and preliminary aspects of the prooftesting of supplementary devices which are intended to be used in conjunction with a previously developed protective combat boot. (2) The results of prooftesting the supplementary devices will be supplied later as a supplement to this report.

The standard stitched or direct molded sole (DMS) combat boot is not effective in preventing an amputation of a foot exposed to the blast effects of a small AP land mine (such as the U. S. Army M-14 which contains one ounce of tetryl). Modifying the boot by means of a protective shank can salvage about 27 percent of the casualties from amputation, and reinforcing the counter area of the boot upper can increase the salvage from amputation to about 65 percent. (2)

The supplementary devices are intended to increase the level of protection provided by the protective combat boot from the 27 to 65 percent possible salvage to at least 90 percent possible salvage. The factors involved in the design of the supplementary devices are discussed in detail in the Phase I Final Report under this contract (1) and are briefly reviewed below.

PART I. REVIEW OF THE ANALYTICAL AND EXPERIMENTAL DATA USED IN THE DESIGN OF THE BLAST PROTECTIVE SUPPLEMENTARY DEVICES

Phase I of this program included the theoretical and experimental development of the concepts which were eventually fabricated in a quantity sufficient for blast evaluation. These data are fully covered in IITRI Report E6029-5. (1)

To summarize briefly, the impulsive load generated by the land mine must be reduced to a tolerable level by a supplementary device used in conjunction with a protective boot. A tolerable level is defined by the 90 percent possible salvage criteria. In this context, possible salvage refers to a level of injury which an experienced observer would regard as not likely to require an amputation of the foot. A medical judgment of this sort is somewhat subjective; however, several independent evaluations of the same specimen can be used to arrive at an average evaluation.

The Phase I effort was primarily devoted to the study of the system shown in Figure 1. A water bath receives the impulsive load which would normally be transmitted to the foot. Figure 2 indicates the analogous system, including a human foot. Although a considerable physical difference exists between the two systems, the matching soft tissue-water impedance and the extremely short duration of the shock portion of the loading wave had made the water bath an evaluation tool of considerable significance to this program.

Based on experiments with the water bath system of Figure 1, it was determined that the unit area impulse would be less than 0.4 psi-sec for any of the sabot shanks which were considered and, likewise, that the peak pressure would be limited to less than 2,000 psi. It was also noted that the external wedge shape which is directly exposed to the land mine would limit the gross impulse input to about 5.7 pound-seconds. A comparison of these data to the estimated damage threshold data for a human foot indicated that any of the supplementary device systems which were evaluated are capable of achieving a relatively high level of protection.

The sabot shanks provided a level of protection which appeared to be related to their mass without regard to internal construction or material parameters. The heavier sabot shanks resulted in lower values for peak pressure and unit area impulse. The significance of this fact is that there is no additional foot-saving advantage to be gained through a multiple-layered, impedance-mismatched sabot shank, or through the use of crushable materials or configurations within the sabot shank; a sufficient number of impedance mismatch layers is contained within the boot protective shank for this purpose.

The series of 18 cadaver experiments with a configuration generally similar to Figure 2 resulted in only one case of damage sufficient to rupture the skin. This latter case involved the use of a Lexan polycarbonate plastic sabot shank. The number of variables involved in these experiments make it difficult to predict the precise level of protection which any particular system may provide, but the range of damage indicates that almost any of the protective systems has a good chance of meeting the required 90 percent possible salvage level.

A full description of these experiments is included in the Phase I report (1) and the results are reported here in Table I. All combinations of sabot variables performed equally well on a range of cadaver legs for this small test series. Therefore, although more data are desirable, the selection of any particular combination should be based upon comfort or economic consideration.

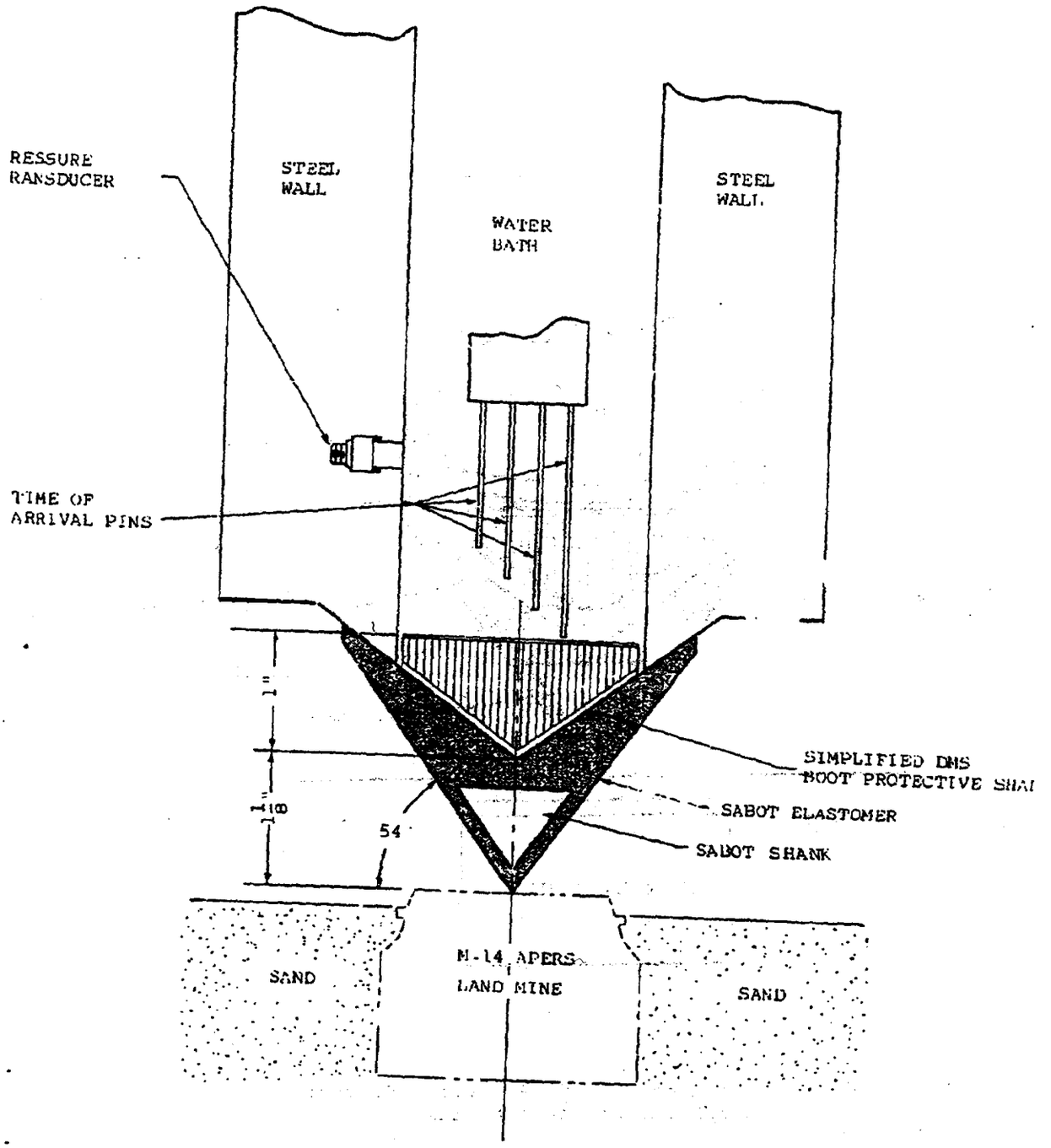

Figure 1 Aquarium Water Bath Experimental Configuration

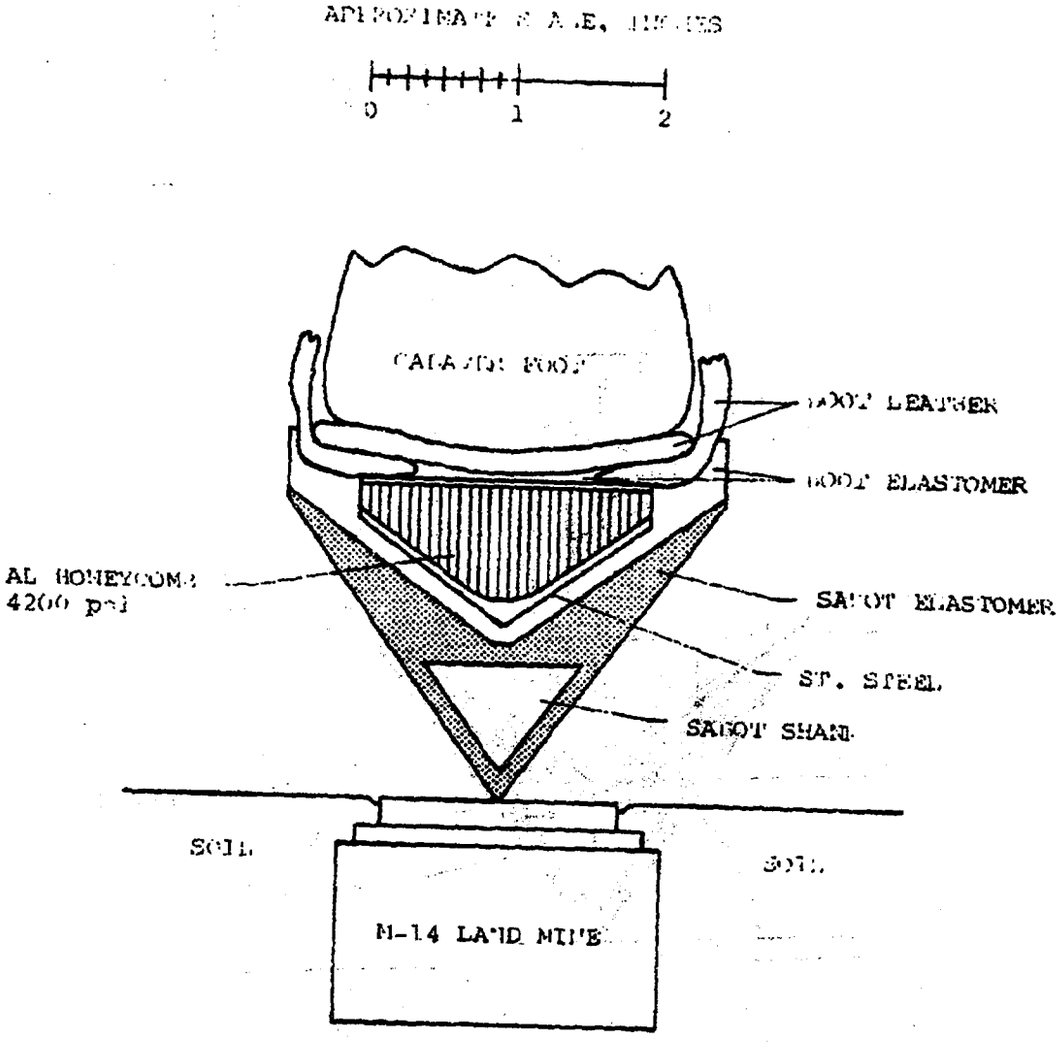

Figure 2 A Section View Of A Typical Protective Boot/Sabot Combined System

Table [illegible]

[illegible]

CADL Test	Boot Variables: Shank	Boot Variables: Outsole	Boot Variables: Counter	Shank Variables: Aluminum Upper Reinforcement	Shank Variables: Shank Material	Soft Tissue Damage	Bone Fractures: Calcaneus	Bone Fractures: Talus	Bone Fractures: Cuboid	Bone Fractures: Tarsals	Bone Fractures: Tibia	Bone Fractures: Fibula	Bone Fractures: Complete Foot	Bone Fractures: Multiple Foot
3182	Two pc	Cutaway	Metal	As Shown in Figure 3a	Aluminum	None								
8[illegible]	"	"	"	"	Lexan	"								
8[illegible]	"	"	"	"	Tungsten	"								
8[illegible]	Two pc	Cutaway	Metal	Same Shank And Elastomer Only Without The Aluminum Upper Reinforcement	Aluminum	None								
8[illegible]	One pc	"	Leather		Aluminum	"								
8[illegible]	"	"	"		Lexan	S F cm.								
8[illegible]	Two pc	"	"		Air Void	None								
87	"	"	"		Aluminum	"								
88	"	"	"		Lexan	"								
89	One pc	"	Metal		ST STL	"								
90	"	"	"		Mar STL	"								
91	"	"	"		Honeycomb STL	"								
92	"	"	"		Aluminum	"								
93	"	"	"		ST STL	"								
94	"	"	"		Si Carbide	"								
95	"	"	"		Honeycomb/Al	"								
96	"	"	"		Magnesium	"								
97	"	"	"		Lexan	"								

EXPLANATION OF SYMBOLS

Soft Tissue Damage Column

None – No visible skin lacerations

S Scr– Severe damage with an 8cm long laceration

Bone Fracture Columns *

■ Severe fracturing and or comminution

□ Moderate fracturing with several large bone pieces and/or comminution of a relatively small area

▨ Light fracturing (i.e., chip fractures)

□ No discernible fracture

*Categorization of [illegible] involves some judgment and is based on interpretation of the 4 radio CADL Autops; Reports. Any difficulties of opinion in case figures will [illegible] be limited to changes of the category [illegible].

PART II. FABRICATION OF FOOTWEAR

The fabrication of 10 pairs of each of two supplementary device concepts was a major portion of the Phase II effort. Figures 3 and 4 show the two concepts mounted on boots. Figures 5 and 6 show the concepts in pairs. Note that concept A is shown in Figure 5 without the rubber overshoe attaching system. The molds which were used to cast the urethane rubber are shown in Figures 7 and 8. The protective sabot shank is shown in Figures 9 and 10.

The urethane elastomer used for these models is furnished by Dik-O-Seal of Chicago, Illinois, and is designated ABRASHUN 5055. The material has a nominal durometer of 55 shore A and is somewhat softer than that used previously for the initial samples. Some difficulty noted in molding this softer material resulted in air voids near the edges and some internal bubbles, but these should not affect the overall blast protective qualities of the sabot system.

A. Concept A Fabrication Details

The solid aluminum shank shown in Figures 9 and 10 was molded directly into the urethane casting. This casting was then adhesive bonded to a rubber overshoe by an overlapping strip of 1/16-inch thick neoprene rubber which was contoured to fit. The adhesive used was Locktite 404 which contains a Methyl-Z-Cyanoacrylate resin and is similar to Eastman 910.

The rubber overshoe itself is a commercially available item designated by the manufacturer* as Sandal, Extra Large, 1100 Black. The overshoe was shortened slightly and the bottom was removed so that the sabot as shown in Figure 5 is mounted directly against the bottom of the combat boot and the overshoe is used only to retain it in place.

B. Concept B Fabrication Details

Concept B was also fabricated with the aluminum shank molded in place. The upper part of the Concept B elastomer was designed to fit against the full heel protective combat boot, but can also be used with the cutaway heel. Figures 4 and 6 show the Concept B System.

*Tingley Rubber Corp., South Plainfield, New Jersey

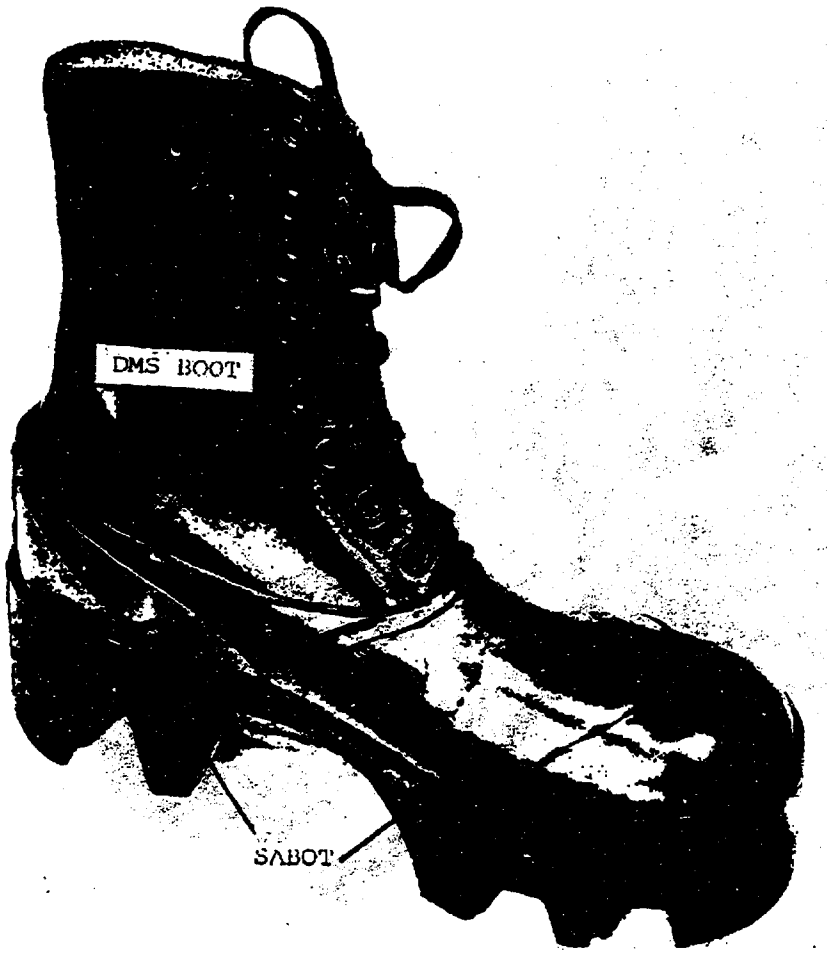

Figure 3 Concept "A" Sabot Prototype Shown Mounted On A DMS Protective Combat Boot

Figure 4 Concept "B" Sabot Prototype Shown Mounted On A DMS Protective Combat Boot

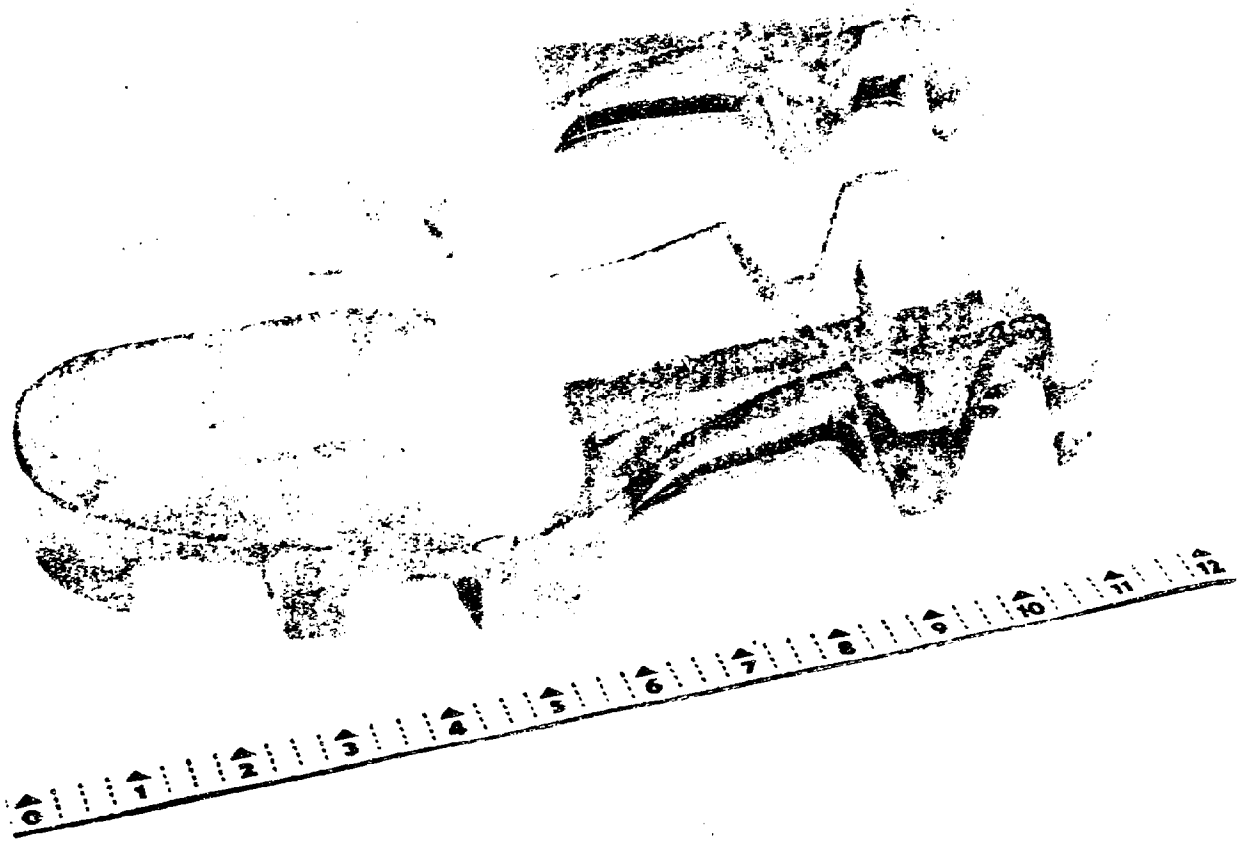

Figure 5 Pair Of Concept "A" Sabot Elastomers With Molded-In-Place Shanks Shown Less Rubber Overshoe

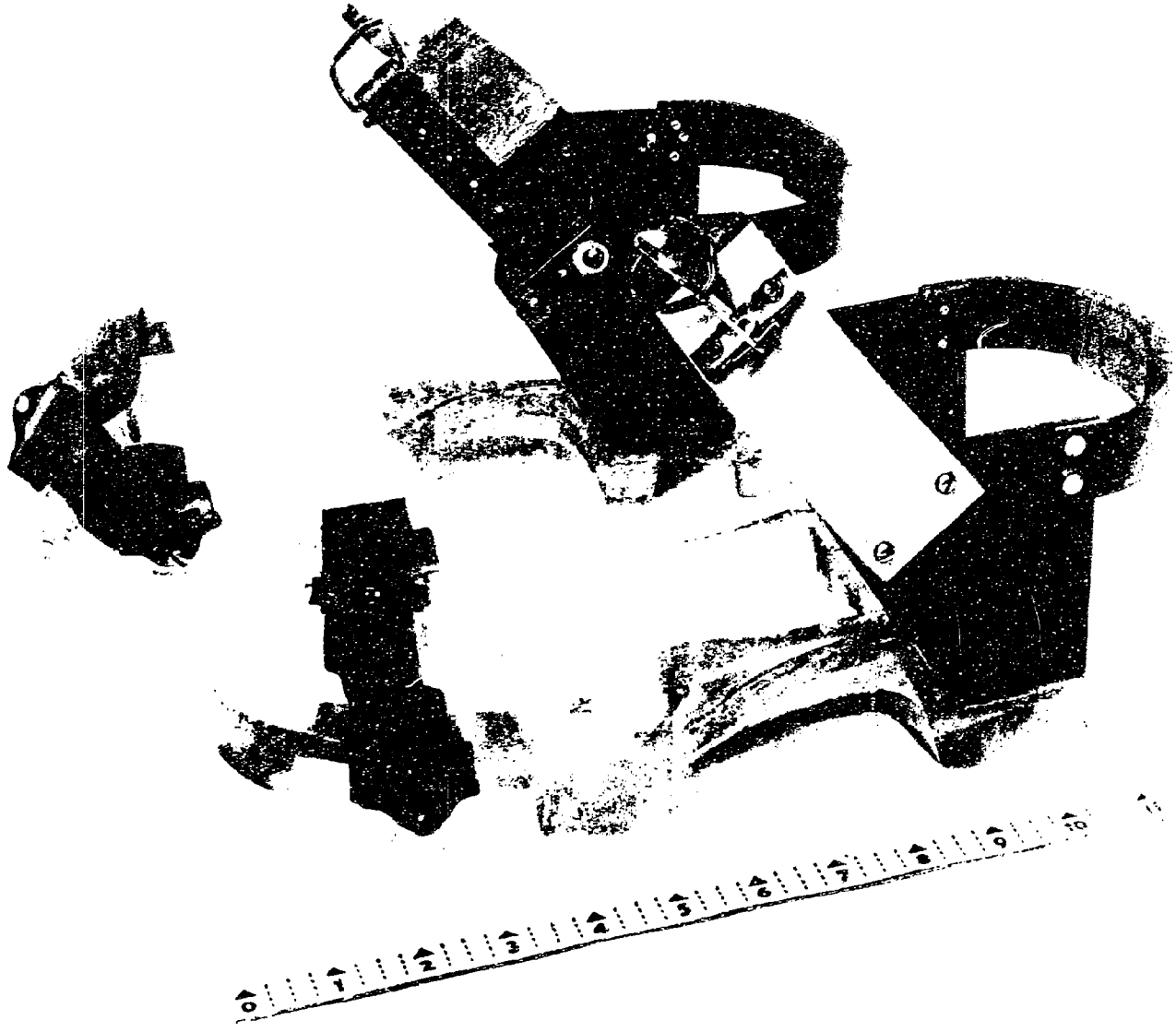

Figure 6 Pair of Concept "B" Sabot Systems Complete With Upper Reinforcements And Shanks

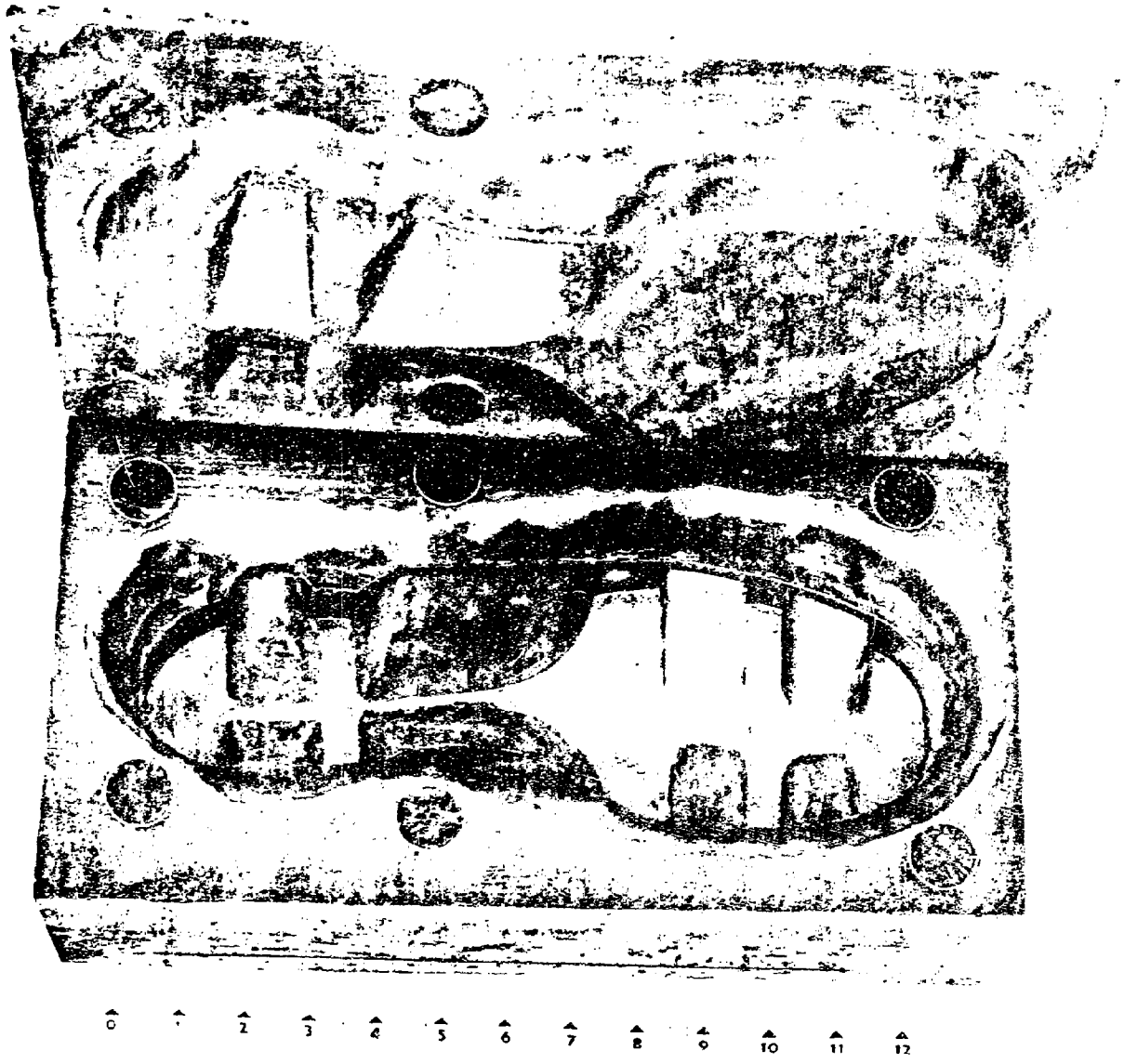

Figure 7 Mold For Concept "A" Sabot Elastomer (Left Foot)

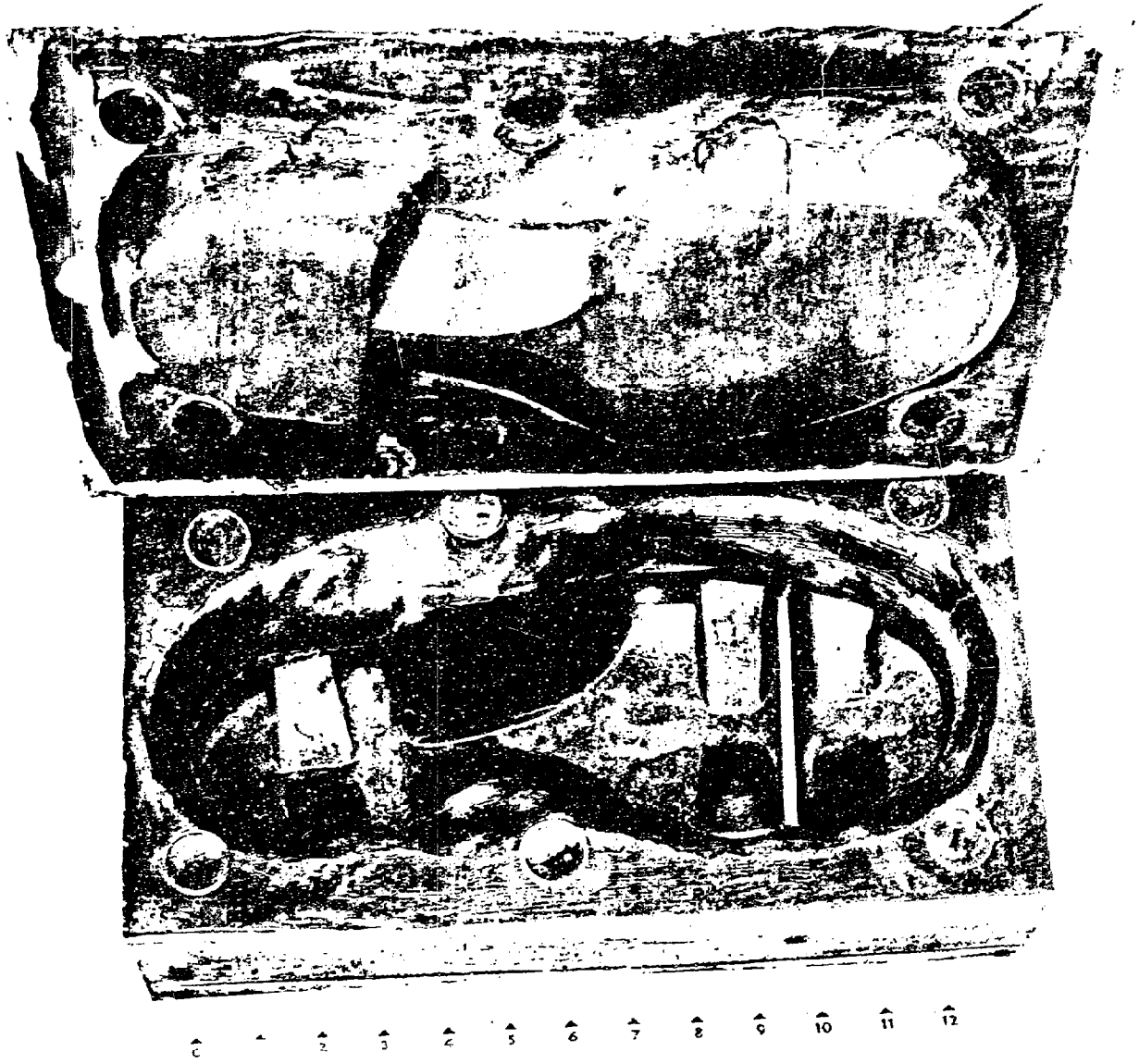

Figure 8 Mold For Concept "B" Sabot Elastomer (Left Foot)

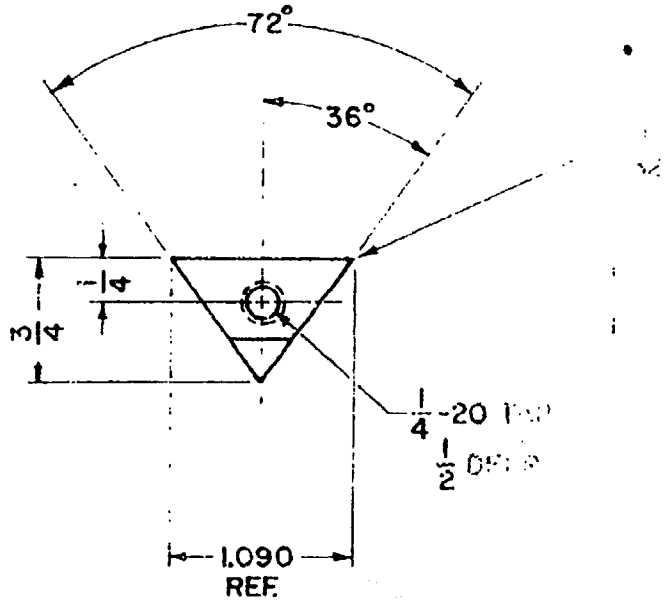

Figure

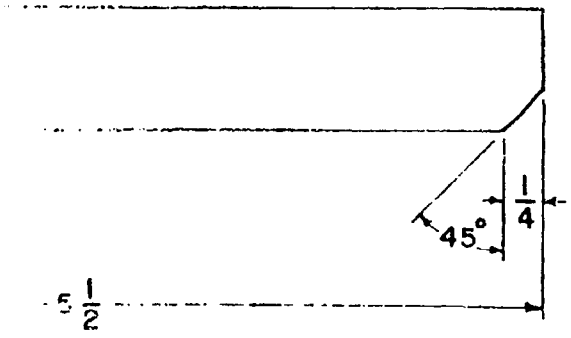

Types "A" And "B"

Best Available Copy

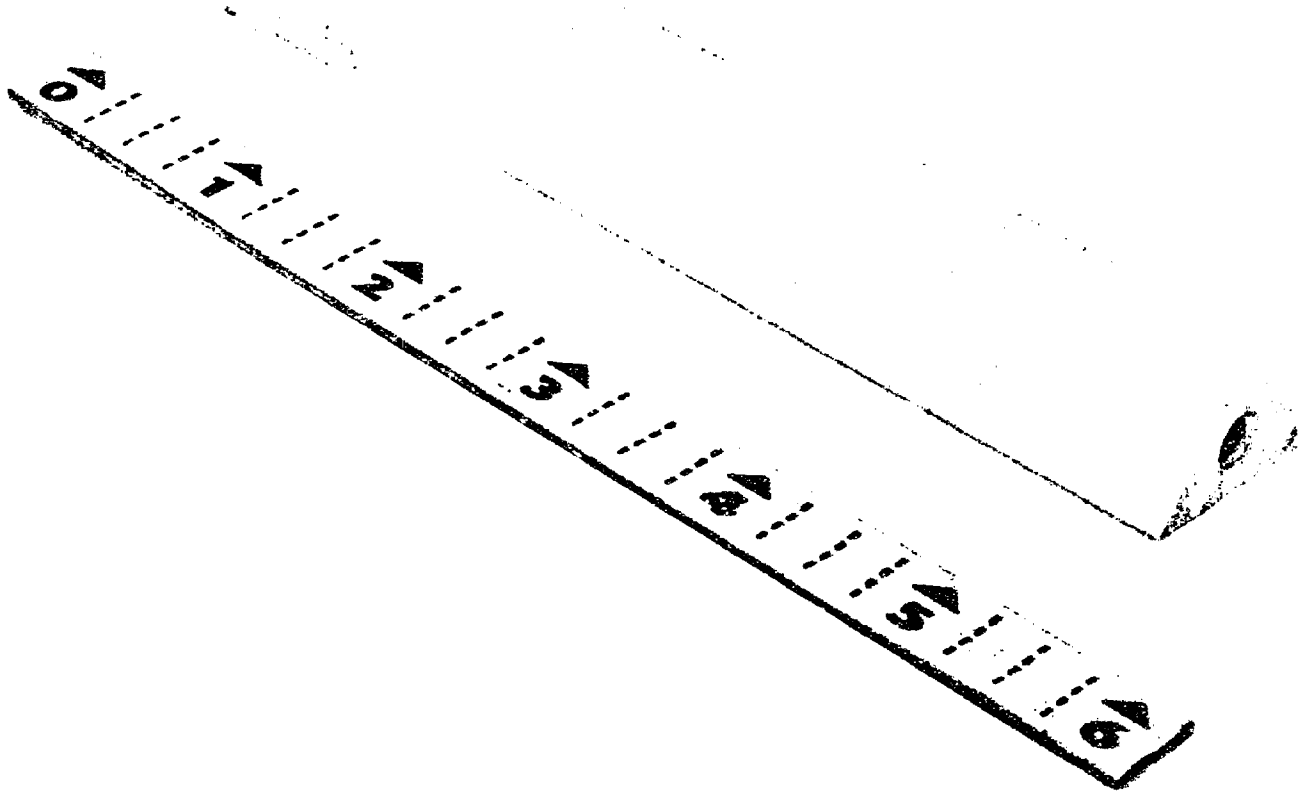

Figure 10 Aluminum Alloy 2024-T3 Sabot Shank

The upper reinforcement shown in Figure 4 is comprised of the two-piece parts shown in Figures 11 and 12. The intent of this system of upper reinforcement is to minimize the lateral expansion of the heel of the foot. These two pieces are fabricated from aluminum alloy and black-anodized.

PART III. PRELIMINARY PROOFTESTING CONSIDERATIONS

Final prooftesting of the sabot concepts will involve the use of cadaver lower extremities and protective combat boots as well as the sabot which is being evaluated.

A recommendation is made for the tests to be conducted at the Army Chemical Research and Development Command (CRDL) by the personnel of the Biophysics Division, Body Armor Branch. Autopsy reports, X-rays, and photographs will be supplied by CRDL to a number of experienced observers for evaluation of the damage to the cadavers, and the results will be tabulated and analyzed.

The M-14 land mine will be used and the emplacement and initiation techniques are to be similar to those established by CRDL and employed for the protective combat boot evaluation. (2)

Since the damage level will be considerably less with the sabot system than with the protective boot alone, a more detailed analysis of the damage may be useful. The primary consideration is the amputation versus possible salvage judgment; however, a breakdown similar to the one indicated in Table I may permit a more detailed picture of the damage.

The prooftesting of the 20 pair of Concepts A and B (10 pair of each type) should include a minimum of 10 tests with each type or a total of 20 tests. This amount will provide half of the lot for any retesting or preliminary walk-and-wear evaluation which may be desired.

The test program should be conducted with protective shoes that are similar to those being procured under Natick's current contract with the Genesco Company for which IITRI is under contract to furnish attenuators. This protective shoe procurement will furnish a one-piece honeycomb attenuator or boot shank and a leather counter incorporated into a combat boot of DMS construction. If tests with the more effective metal heel counter are desired, they should be in addition to the leather counter tests. The protective shoes used on these tests must be provided as Government furnished property (G.F.P.). Preliminary information indicates that an adequate supply exists from the 150 pair procurement furnished by Genesco under sub-contract with IITRI, contract number DA 19-129-QM-2061.

Best Available Copy

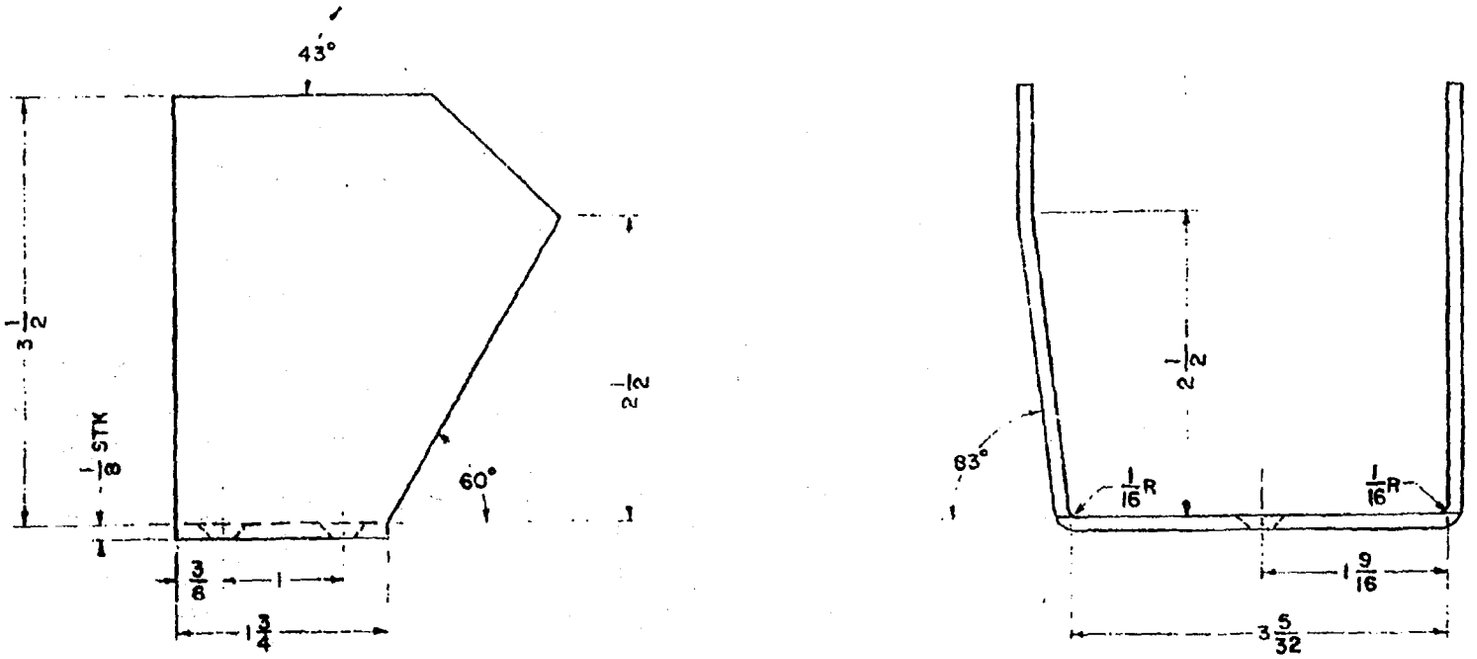

Figure 1. [illegible] Component (Left Foot)

[illegible] No. 2024-0 [illegible] Heat-Treated
[illegible] Before Bending

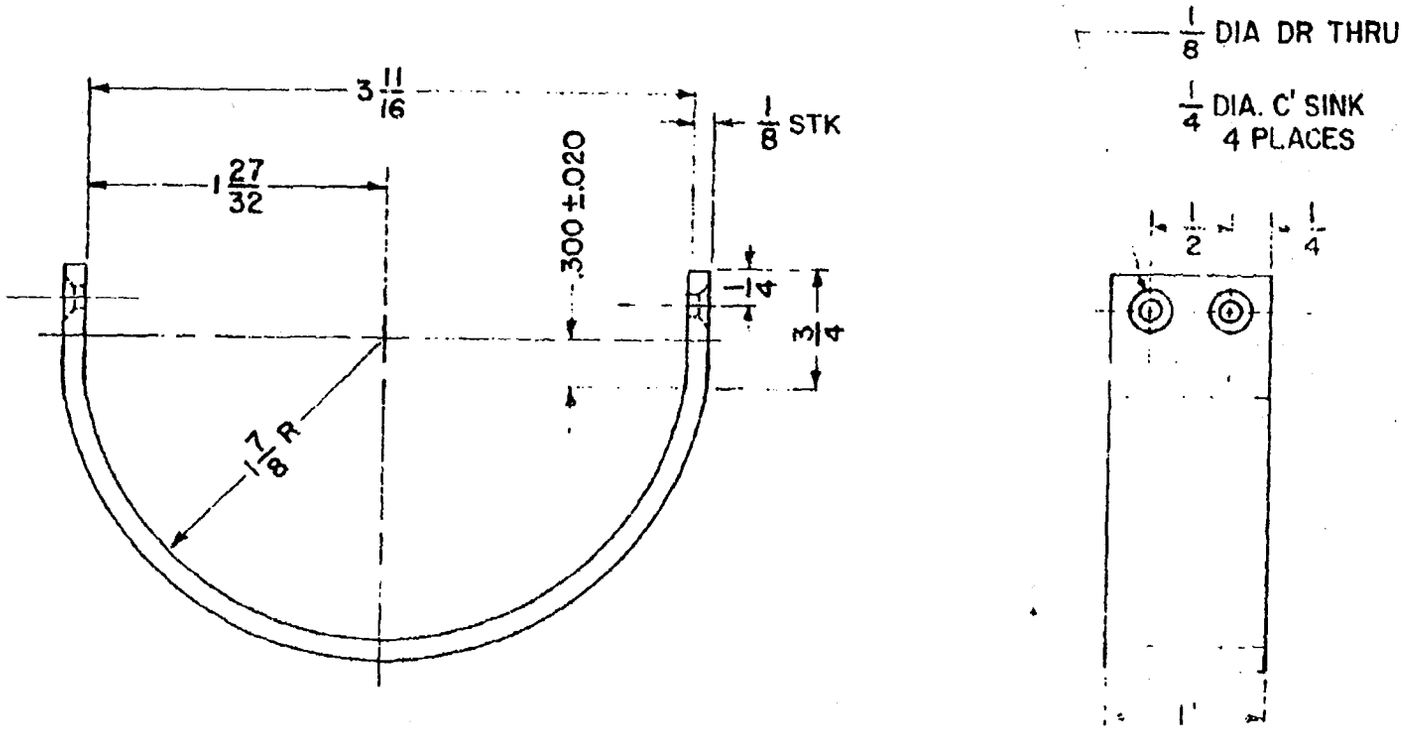

Figure 12 Band For Sabot Upper Reinforcement, Aluminum Alloy 2024-T3

A discussion of the proftesting procedures with an analysis of the test results will be included in a supplement to this report. This supplement will be available within 30 days after receipt of the detailed test results from CRDL, including the evaluation of the damage to the cadaver specimens. Some delay in obtaining these evaluations may be expected since the personnel experienced in this area are not always immediately available.

References

1 Fujinaka, E.S., and MacDonald, J.L., Development of Optimum Foot Protection Against Antipersonnel Mines Using a Supplementary Device, Phase I Report IITRI No. E6029-5, IIT Research Institute, Chicago, Illinois (March 15, 1966).

2 Fujinaka, E.S., and MacDonald, J.L., Research and Development of Blast Protective Footwear, Fabrication and Prooftesting, Technical Report 67-5-CM, U.S. Army Natick Laboratories, Natick, Massachusetts (July 1966).

UNCLASSIFIED
Security Classification

DOCUMENT CONTROL DATA - R&D

(Security classification of title, body of abstract and indexing annotation must be entered when the overall report is classified)

1. ORIGINATING ACTIVITY *(Corporate author)*
IIT Research Institute
Technology Center
Chicago, Illinois 60616

2a. REPORT SECURITY CLASSIFICATION
UNCLASSIFIED

2b. GROUP

3. REPORT TITLE
Development, Fabrication and Prooftesting of Optimum Foot Protection Against Antipersonnel Mines Using A Supplementary Device

4. DESCRIPTIVE NOTES *(Type of report and inclusive dates)*
Phase II Report

5. AUTHOR(S) *(Last name, first name, initial)*
MacDonald, J. L.
Fujinaka, E. S.

6. REPORT DATE
December 1966

7a. TOTAL NO. OF PAGES
19

7b. NO. OF REFS
2

8a. CONTRACT OR GRANT NO. DA 19-129-QMC-379(N)

b. PROJECT NO. 1K6-43303-D547

c.

d.

9a. ORIGINATOR'S REPORT NUMBER(S)

9b. OTHER REPORT NO(S) *(Any other numbers that may be assigned this report)*
67-45-CM TS-149

10. AVAILABILITY/LIMITATION NOTICES
Each transmittal of this document outside the agencies of the U. S. Government must have prior approval of the Director, Clothing and Organic Materials Division, U. S. Army Natick Laboratories, Natick, Mass.

11. SUPPLEMENTARY NOTES

12. SPONSORING MILITARY ACTIVITY
U. S. Army Natick Laboratories
Natick, Massachusetts 01760

13. ABSTRACT
This report covers Phase II of a program to develop a supplementary item of protective footwear to be used in conjunction with a previously developed protective combat boot. It was directed toward fabrication of test prototypes for blast evaluation. The supplementary devices were of two types, Concept A and Concept B, both using an identical solid aluminum shank. Concept B incorporated a system of reinforcement for the upper portion of the foot.

A discussion of preliminary prooftesting considerations is presented. This discussion includes the recommendation of test personnel, the quantity of tests, and the protective footwear to be used during tests.

DD FORM 1 JAN 64 1473

UNCLASSIFIED
Security Classification

UNCLASSIFIED

Security Classification

14 KEY WORDS	LINK A ROLE	LINK A WT	LINK B ROLE	LINK B WT	LINK C ROLE	LINK C WT
Development	8					
Testing	8					
Boots	9		8,10		7	
Combat Footwear	9		8,10		7	
Protective	0					
Armed Forces Equipment	4					
Protection	4		8			
Military Personnel	4		9			
Aluminum			8,10		7	
Shanks			8,10		7	
Blast					6	

INSTRUCTIONS

1. ORIGINATING ACTIVITY: Enter the name and address of the contractor, subcontractor, grantee, Department of Defense activity or other organization *(corporate author)* issuing the report.

2a. REPORT SECURITY CLASSIFICATION: Enter the overall security classification of the report. Indicate whether "Restricted Data" is included. Marking is to be in accordance with appropriate security regulations.

2b. GROUP: Automatic downgrading is specified in DoD Directive 5200.10 and Armed Forces Industrial Manual. Enter the group number. Also, when applicable, show that optional markings have been used for Group 3 and Group 4 as authorized.

3. REPORT TITLE: Enter the complete report title in all capital letters. Titles in all cases should be unclassified. If a meaningful title cannot be selected without classification, show title classification in all capitals in parenthesis immediately following the title.

4. DESCRIPTIVE NOTES: If appropriate, enter the type of report, e.g., interim, progress, summary, annual, or final. Give the inclusive dates when a specific reporting period is covered.

5. AUTHOR(S): Enter the name(s) of author(s) as shown on or in the report. Enter last name, first name, middle initial. If military, show rank and branch of service. The name of the principal author is an absolute minimum requirement.

6. REPORT DATE: Enter the date of the report as day, month, year; or month, year. If more than one date appears on the report, use date of publication.

7a. TOTAL NUMBER OF PAGES: The total page count should follow normal pagination procedures, i.e., enter the number of pages containing information.

7b. NUMBER OF REFERENCES: Enter the total number of references cited in the report.

8a. CONTRACT OR GRANT NUMBER: If appropriate, enter the applicable number of the contract or grant under which the report was written.

8b, 8c, & 8d. PROJECT NUMBER: Enter the appropriate military department identification, such as project number, subproject number, system numbers, task number, etc.

9a. ORIGINATOR'S REPORT NUMBER(S): Enter the official report number by which the document will be identified and controlled by the originating activity. This number must be unique to this report.

9b. OTHER REPORT NUMBER(S): If the report has been assigned any other report numbers *(either by the originator or by the sponsor)*, also enter this number(s).

10. AVAILABILITY/LIMITATION NOTICES: Enter any limitations on further dissemination of the report, other than those imposed by security classification, using standard statements such as:

(1) "Qualified requesters may obtain copies of this report from DDC."

(2) "Foreign announcement and dissemination of this report by DDC is not authorized."

(3) "U. S. Government agencies may obtain copies of this report directly from DDC. Other qualified DDC users shall request through _____."

(4) "U. S. military agencies may obtain copies of this report directly from DDC. Other qualified users shall request through _____."

(5) "All distribution of this report is controlled. Qualified DDC users shall request through _____."

If the report has been furnished to the Office of Technical Services, Department of Commerce, for sale to the public, indicate this fact and enter the price, if known.

11. SUPPLEMENTARY NOTES: Use for additional explanatory notes.

12. SPONSORING MILITARY ACTIVITY: Enter the name of the departmental project office or laboratory sponsoring *(paying for)* the research and development. Include address.

13. ABSTRACT: Enter an abstract giving a brief and factual summary of the document indicative of the report, even though it may also appear elsewhere in the body of the technical report. If additional space is required, a continuation sheet shall be attached.

It is highly desirable that the abstract of classified reports be unclassified. Each paragraph of the abstract shall end with an indication of the military security classification of the information in the paragraph, represented as *(TS)*, *(S)*, *(C)*, or *(U)*.

There is no limitation on the length of the abstract. However, the suggested length is from 150 to 225 words.

14. KEY WORDS: Key words are technically meaningful terms or short phrases that characterize a report and may be used as index entries for cataloging the report. Key words must be selected so that no security classification is required. Identifiers, such as equipment model designation, trade name, military project code name, geographic location, may be used as key words but will be followed by an indication of technical context. The assignment of links, rules, and weights is optional.

UNCLASSIFIED

Security Classification

NOTICE OF CHANGES IN CLASSIFICATION,
DISTRIBUTION AND AVAILABILITY

69-18 15 SEPTEMBER 1969

AD-813 [illegible] IIT Research Inst., Chicago, Ill. Technology Center. Technical rept. 1 Feb-30 Jul 66 on Phase 2. Dec 66 [illegible] Contract DA-19-1[illegible]- C[illegible]-279(N)	USAMC others to Director, Clothing and Organic Materials Div., Army Natick Labs., Natick, Mass.	No Limitation	USAMC ltr, [illegible]