UNCLASSIFIED

AD NUMBER

AD812823

NEW LIMITATION CHANGE

TO

Approved for public release, distribution unlimited

FROM

Distribution authorized to U.S. Gov't. agencies and their contractors; Administrative/Operational Use; Apr 1967. Other requests shall be referred to Air Force Materials Lab., Kirtland AFB, NM.

AUTHORITY

AFWL ltr, 30 Nov 1971

THIS PAGE IS UNCLASSIFIED

AFWL-TR-67-19

AFWL-TR
67-19

AD812823

AFWL DESIGN CRITERIA FOR USAF MUNITIONS HANDLING AND LOADING EQUIPMENT

James W. Fisk, Captain, USAF

D D C
MAY 1 1967

TECHNICAL REPORT NO. AFWL-TR-67-19
April 1967

AIR FORCE WEAPONS LABORATORY
Research and Technology Division
Air Force Systems Command
Kirtland Air Force Base
New Mexico

AFWL-TR-67-19

Research and Technology Division
AIR FORCE WEAPONS LABORATORY
Air Force Systems Command
Kirtland Air Force Base
New Mexico

When U. S. Government drawings, specifications, or other data are used for any purpose other than a definitely related Government procurement operation, the Government thereby incurs no responsibility nor any obligation whatsoever, and the fact that the Government may have formulated, furnished, or in any way supplied the said drawings, specifications, or other data, is not to be regarded by implication or otherwise, as in any manner licensing the holder or any other person or corporation, or conveying any rights or permission to manufacture, use, or sell any patented invention that may in any way be related thereto.

This report is made available for study with the understanding that proprietary interests in and relating thereto will not be impaired. In case of apparent conflict or any other questions between the Government's rights and those of others, notify the Judge Advocate, Air Force Systems Command, Andrews Air Force Base, Washington, D. C. 20331.

This document is subject to special export controls and each transmittal to foreign governments or foreign nationals may be made only with prior approval of AFWL (WLDM), Kirtland AFB, N.M. 87117. Distribution of this document is limited because of the technology discussed.

DO NOT RETURN THIS COPY. RETAIN OR DESTROY.

AFWL-TR-67-19

AFWL DESIGN CRITERIA FOR USAF MUNITIONS HANDLING AND LOADING EQUIPMENT

James W. Fisk, Captain, USAF

TECHNICAL REPORT NO. AFWL-TR-67-19

This document is subject to special export controls and each transmittal to foreign governments or foreign nationals may be made only with prior approval of AFWL (WLDM), Kirtland AFB, N.M. Distribution of this document is limited because of the technology discussed.

FOREWORD

This report was prepared under Program Element 6.24.05.06.4, Project 5704, Work Unit-5704-00-008. Inclusive dates of research and survey for this report are 16 November 1961 to 1 March 1967. The report was submitted 3 March 1967 by the AFWL Project Officer, Captain James W. Fisk (WLDM).

This report has been reviewed and is approved.

James W. Fisk
JAMES W. FISK
Captain, USAF
Project Officer

Keith M. Baird
KEITH M. BAIRD
Captain, USAF
Acting Chief, Mechanical Branch

George C. Darby, Jr.
GEORGE C. DARBY, JR.
Colonel, USAF
Chief, Development Division

ABSTRACT

Air Force Weapons Laboratory general design criteria for Munitions Handling and Loading Equipment are outlined showing basic considerations, environment, functions, boundary conditions, certification procedures, and important references. This report is intended to be a guide for the design/project engineer, for both the USAF and industry.

CONTENTS

Section		Page
I	INTRODUCTION	1
II	BACKGROUND	3
III	THE PROJECT ENGINEER	4
	Organization	4
	The Work	5
	General	21
IV	TESTING	23
	Test Plan	23
	Test Conditions	24
	Test Plan Coordination	26
	Test Report	26
	Functional Evaluational Report	27
V	UNSATISFACTORY REPORT ENGINEERING	28
VI	NUCLEAR SAFETY	29
VII	PROJECT TERMINATION; TECHNICAL REPORT	31
VIII	OPERATIONAL CAPABILITIES	32
	Bomber Aircraft	32
	Interceptor Aircraft	32
	Fighter Bomber Aircraft	32
	Navy and Marine Equipment	33
IX	REFERENCE DOCUMENTS	47
	APPENDIX	51
	DISTRIBUTION	56

ILLUSTRATIONS

Figure		Page
1	MHU-7/M Trailer	34
2	MHU-12/M Trailer	35
3	MJ-1 Bomb Lift Truck	36
4	MHU-33/M Bomb Lift Trailer	37
5	a. MF-9 Bomb Lift Trailer	38
	b. MF-9A Bomb Lift Trailer	39
6	SEALS (Stored Energy Actuated Lift System); MHU-92/M Bomb Lift Trailer	
	a. Gas Generator	40
	b. Gasoline Engine	41
7	MHU 83/E Bomb Lift Truck	42
8	MHU-85/M Trailer	43
9	Navy Shipboard Aero-46/A Weapons Loader	44
10	Navy Shore-Based Aero-47/A Weapons Loader	45
11	Marine SATS Weapons Loader A/S-32K-1	46

SECTION I

INTRODUCTION

1. Purpose

Much of the basic design criteria for USAF munitions handling and loading equipment is scattered through various reference documents. The utilization of that knowledge depends on whether or not the design engineer knows of the existence, applicability, or location of these references. This design criteria report will provide a composite by which USAF and contractor design engineers can determine AFWL/WLDM (Mechanical Branch) requirements for designing munitions equipment to handle nuclear weapons. The project engineer must have a working knowledge of the basic elements of equipment construction; i.e., he must be able to analyze applied forces and basic stress, and he must have access to information about materials and shapes.

2. Equipment

The project may be in-house or contractual, and will be concerned with bolsters, trailers, hoists, storage stands, assembly stands, bomb lift trucks, dollies, skids, adapters for the above, or any other equipment intended to be used as handling equipment for munitions, specifically nuclear weapons. Although AFWL has responsibility for nuclear weapon equipment, economics usually forbids the design of weapons handling equipment for nuclear applications alone. Thus, the universality of an item is always one of the basic design considerations.

3. Types of Engineering Work

Handling and loading equipment project work done by the Laboratory falls into one of three categories:

a. Exploratory Development

The work done in this area is conceptual and evolves from basic concept to complete development. Usually no operational requirement exists for this work but the work anticipates weapons and weapon system trends and thus keeps these items of support equipment ahead or abreast of new aircraft or missile delivery systems.

b. Support Development

The operational commands submit equipment requirements based on lack of available equipment to support new aircraft or perhaps an expansion of operational capability which available equipment was not designed to handle. Many of the basic field requirements are listed and a development project is initiated to fulfill these requirements. The requirements are usually received in the form of a QOR (Qualitative Operational Requirement) and if recommended by AFSC and approved by Hq USAF becomes an OSR (Operational Support Requirement).

c. Support Engineering

AFLC or another major air command can request engineering assistance to modify or provide adapters for existing equipment, especially if nuclear weapon handling is involved. This engineering work ranges from simple replacement of some parts to a major modification of the system. This type of work is usually of lower priority than development work.

4. Procedure

All engineering work on handling equipment done by AFWL can be arranged in the following manner:

a. Define the problem.
b. Analyze the problem and determine approaches.
c. Determine forces, stresses, materials, etc., as needed.
d. Determine preliminary design or fix as applicable.
e. Revise design or fix if necessary and finalize.

SECTION II

BACKGROUND

Most of the specifications for this equipment have evolved through years of experience by the engineers at various DOD installations. The experienced engineer has learned what contacts he must make with other USAF and DOD agencies and the location and type of reference material, but generally he is too busy to consolidate this experience and knowledge into one document for the new engineers that must follow. Most design criteria and requirements are in published form, but some are based on experience and have not been published, especially those criteria dealing with transport and loading of weapons.

SECTION III

THE PROJECT ENGINEER

1. Organization

a. Project Documentation

Only a part of the project engineer's work is engineering. Much of the work involves various Air Force paperwork. Each of the three work areas mentioned in Section I, paragraphs 3a, b, and c, requires basic project documentation in order to have legal authorization to do any work. Copies of this documentation should be sent to the following agencies for their information, comments, and retention:

(1) AFATL/ATZC
Eglin AFB, Florida

(2) SEG/SEMSM
Wrignt-Patterson AFB, Ohio

(3) ASD/ASZT
Wright-Patterson AFB, Ohio

(4) SAAMA/SANE
Kelly AFB, Texas

(5) Army Aviation Command
12th and Spruce
St Louis, Missouri

(6) U.S. Naval Air Development Center
Weapons Division, Engineering Development Laboratory
Johnsville, Pennsylvania

This documentation, along with periodic status reports, is the only means whereby anyone outside of WLDM's immediate office, can obtain information about the work being done. Exploratory Development is done under Project 5704, Support Development is done under Project 5708, and Engineering Support is done under ESP-02113. (See Appendix for sample documentation.) All project documentation is coordinated with WLP (Plans and Programs) at AFWL.

b. Technical Information Division (WLI)

Besides the many technical documents available from or through the Technical Library Branch (WLIL) and the assistance provided by the Reports and Data Branch (WLIR) in preparing technical reports, a large majority of the

project engineer's work requires continuous coordination with the Standardization Group of WLIR and the Design Branch (WLID). All new equipment requires nomenclature (DD Form 61), military specifications, procurable status statement, and eventually procurement data worksheets (AFLC/AFSC Form 1) and In-Service Engineering transfers. These services are provided by WLIR in addition to publishing Special Weapons Equipment Lists (SWELs) and Programmed Material Requirements (PMRs) which list USAF aircraft, weapons, and associated equipment now used or proposed for use in USAF Operational Commands. WLID provides engineering drawings, graphic art, technical illustrations, design reference material, and can reproduce drawings when required.

c. Testing; Air Force Special Weapons Center/Test and Engineering (AFSWC/SWT)

Upon completion of the preliminary design, but before final design and drawings, WLDM usually requests SWT to build a prototype of the equipment or have it built and tested according to a test plan written by the AFWL project engineer. The fabrication and testing are documented and coordinated through AFWL/WLP with SWT. This allows SWT time to schedule manpower, funds, and facilities for the project. The testing will help prove out the design and point out weak points that need to be analyzed and reworked. Upon completion of testing, SWT will prepare a test report for distribution to all interested agencies. This report is usually quoted by the project engineers as part of the qualification process. Final qualification and release must be coordinated with WLAS (Nuclear Safety Branch).

2. The Work

This can be divided into Support and Development Engineering. Both of these use the information in AFSCM-80-6, Handbook of Instructions for Aerospace Ground Support Equipment Designers, and AFSCM-80-3, Handbook of Instructions for Aerospace Personnel Subsystem Designers. Exploratory Development and Support Development have been combined into one area because most of the problems are identical. Exploratory development differs from Support in that visualization is required to conceive ideas about equipment with its applications and requirements. Once these have been established, the rest of the work is similar if not identical.

a. Support Engineering

It takes from 2 to 3 years for a project engineer to become proficient. Support engineering projects are of short duration and varied (good experience),

so most new inexperienced engineers should be assigned to do support engineering until they become knowledgeable enough to work in support development or exploratory development. The work during this time will acquaint the engineer with the equipment, its good and bad points, how it is used, operational command requirements, and project management; most of all it will point out future trends and what should be done to stay ahead or abreast of related technology, i.e., weapons, aircraft, missiles, suspension and release equipment, etc.

When operational engineering support is requested, the data should be reviewed to determine if the request is valid. If so, the problem should be reviewed to determine if a change in procedure will solve the problem. Then, the equipment available to perform this function should be reviewed to determine if existing equipment can do the job (reference MIL-Handbook 300). If a modification is necessary, it should be worked out analytically, documented, implemented on available equipment, and tested. A written reply to the requestor with detailed instructions usually suffices with copies of corrections sent to the applicable engineering agency. (If a modification is determined to affect nuclear safety, WLDM will provide engineering.) If a new adapter or piece of equipment is necessary, then much more work is required and the following agencies are responsible for the indicated areas:

(1)	Review Problem	WLDM
(2)	Preliminary Analysis and Design	WLDM
(3)	Nomenclature	WLIR
(4)	Status Classification	WLIR
(5)	Military Specifications if Applicable	WLIR
(6)	Fabrication and Test Plan Data to SWT	WLDM
(7)	Fabrication of Prototype	WLDM or SWT
(8)	Test of Prototype	SWT
(9)	Official AF Drawings	WLID
(10)	Final Test Report	SWT
(11)	Engineering Evaluation Report	WLDM
(12)	Procurement Data Worksheets	WLIR
(13)	Engineer Transfer to AMA	WLIR

Among considerations in the preliminary analysis and design are:

(1) Function

(2) Type of load

(3) Maximum and minimum values for repeated loads

(4) Discontinuities or sectional changes

(5) Material properties

(6) Internal stresses

(7) Environmental Requirements MIL-STD-810

(8) Mobility Requirements MIL-M-8090

(9) Air Transportability Requirements MIL-A-8421

(10) Hydraulic Systems MIL-H-5440

(11) Gasoline Fork Lift Trucks MIL-T-15442

(12) Electric Fork Lift Trucks MIL-T-22292

(13) Aeronautical Support Equipment MIL-S-8512

(14) Reliability MIL-R-27542

(15) Detailed specification of the parent equipment

(16) Maintainability Requirements MIL-M-26512

(17) WLI-2 Exhibit

(18) Nuclear Weapon System Safety Design AFSCM-1

(19) (a) HIAGSED 80-6 (Handbook of Instructions for Aerospace Ground Support Equipment Design)

(b) HIAPSD 80-3 (Handbook of Instructions for Aerospace Personnel Subsystems Designers)

(c) HIAVED 80-7 (Handbook of Instructions for Aerospace Vehicle Equipment Design)

(20) Aircraft/weapon configuration compatibility requirements (e.g., weapon stores vs. fuel tanks)

(21) Shock or acceleration loads to weapon(s) on Handling Equipment (Reference (7), (8), (9) listed above, and (37) listed below)

(22) Ensure weapon does not rotate or shift during any transport movements (tie-downs)

(23) Determine hardened areas of weapons for handling (May puncture weapon skin)

(24) Determine tie-down configurations if applicable

(a) Weapons to equipment

(b) Equipment with and without weapons on all aircraft

(25) Design system fail/safe (Will not drop weapon(s) under any failure conditions except most improbable*)

(26) Design hydraulic drift rates (if applicable) to be 0.02 inch or less vertical travel of weapons per hour (preferably 0 inch per hour)

(27) Design safety pressure relief systems into hydraulics in case of overpressure

---

*See Section VI, paragraph 2g.

(28) Design hydraulic system so that pressure should be applied to lower load (i.e., if no applied pressure, no movement either up or down)

(29) Design hydraulic system for synchronous movement of all lifting parts, if applicable. Controls in accordance with MIL-S-8512.

(30) Design part to perform many or all functions in its general range of operations (universality); i.e., various weapons, diameters, loads, mobility, aircraft, etc.

(31) Good common sense

(32) T.O. 11N-20-12

(33) MIL-STD-268

(34) MIL-Hdbk-300

(35) Pneumatic Systems MIL-P-5518

(36) Visual accessibility points on nuclear weapons must be considered in transport equipment design.

(37) Automotive Test-Facilities Brochure, Aberdeen Proving Ground, Md.

(38) Design a manually operated back-up system for use during power failure or emergencies.

(39) Floodlights for night loadings shall be provided if required.

Obviously, all of the above criteria, especially in published form, are not intended specifically for design of nuclear weapons handling and loading equipment. Some parts will have to be deleted and other parts added. Under no circumstances should the requirements of any other document supersede the requirements set forth in the detailed specification written by the AFWL project engineer for the equipment in question.

The types of stresses involved in an ordinary trailer are:

(1) Static stresses
- (a) Load
- (b) Reaction
- (c) Torsion
- (d) Bending
- (e) Column
- (f) Temperature
- (g) Creep

(2) Dynamic Stresses
- (a) Variable loads (repeated loads)
- (b) Inertia loads
- (c) Impact loads

(d) Torsion loads

(e) Centrifugal loads

The determination of the stress conditions depends on the function and environment of the equipment. For example, a piece of equipment with rated load, kept in storage, is under constant stress which can be as damaging as repeated loads or stress reversal. If the trailer is moved from storage at temperature of 60°F to an outside location where the temperature is (-40°F), stresses will be induced in the structural members which must be allowed for in design. A weapon trailer can experience every load listed in (1) and (2) above. The static stresses are straightforward but the dynamic loads can be derived from the following conditions:

(1) Repeated, impact, and and torsional loads from ground transportation over uneven terrain.

(2) Inertia and centrifugal loads from air transportation.

(3) Impact loads from any crash condition in which the equipment must retain the weapons. A safety factor of 1.5 is recommended for structural design when coupled with a load factor derived from: repeated loads, inertia loads, impact loads and torsional loads. This design factor usually amounts to 3.0 or more, including the safety factor and load factor.

(4) Table I shows typical load conditions.

b. Development Engineering

While the design of an adapter is fairly well defined by the parent item, the weapon(s), and the aircraft compatibility; the development of a new item involves many more parameters:

(1) Concept

This defines the functions, environment, performance, compatibility, and applications of the equipment. The concept can be an original idea or it may come from some outside source such as an operational command or industry. A concept usually does not define the equipment except in cases where the equipment exists and can possibly be adapted to meet the requirements.

(a) Functions define the operating area(s), weapons, capacity, mobility, air-transportability, maintainability, reliability, etc.

(b) Environment is usually requested in accordance with MIL-STD-810 plus an icing test as written by AFWL/WLDM except when a particular environmental

Table I

AFWL HANDLING AND LOADING EQUIPMENT DESIGN CRITERIA

Case No.	Mode of Operation	Specification	Load Application	Acceleration g			Safety Factor	Payload
				Vertical	Lateral	Long		
1	Weapon loading onto aircraft	AFWL	Vertical	2	...	...	1.15	Weapons & Adapters
2	Weapon trailer ground transport	MIL-M-8090 & AFWL	Combined	±3.0	±1.5	±2.0	1.15	Weapons & Adapters
3	Air transport† crash condition and flight and taxiing loads	MIL-M-8421	Separate	down 4.5 up 3.0	±8.0* or ±1.5	±8.0*	1.0	Weapons & Adapters

† Weapons must remain on equipment regardless of load conditions.

* With respect to direction of aircraft movement.

For Cases 1 and 2: Design Load--(payload) × g

Yield Load--Design Load × Safety Factor

Ultimate Load--Yield Load × 1.5

For Case 3: Ultimate Load--(payload) × g

The most severe design condition of this chart, MIL-S-8512, MIL-A-8421, MIL-M-8090, MIL-STD-810, and Cargo Aircraft T.O.s are to be used in the design of adapters for transporting and loading nuclear weapons.

If systems include hydraulics, pneumatics, then MIL-H-5440 and MIL-P-5518 must also be met.

Human and Safety Engineering IAW MIL-H-27894, MIL-S-38130, MIL-STD-803A-1, AFSCM 122-1, and T.O. 11N-20-12.

requirement is much more important than the others. The four basic tests which are considered to be mandatory for equipment qualification are

1. Salt spray
2. Sand and dust
3. High temperature
4. Low temperature

The other tests can be waived provided the affected components (i.e., hydraulic, pneumatic, electrical, seals, etc.) consist of parts already qualified according to the applicable military specification for those parts. Some tests can be waived if the adapter or piece of equipment cannot possibly be adversely affected by that environment.

(c) Performance is usually accompanied by a time factor. How many munitions can be moved or loaded in a given time over given terrain conditions?

(d) Compatibility. The sole purpose for the equipment is to support the operational aircraft and to do this, it must be designed to be completely compatible with the aircraft in all of its configurations and with the weapons in all of their configurations. Included in the configurations are the aircraft external fuel tanks. These are loaded and fueled before the weapons are loaded and are very important in determining compatibility parameters. Additionally, wheel fairings, aircraft wheel widths and bases, bomb bay doors, compressed struts, flat tires, etc., all play an important part of determining initial design parameters for weapon equipment. If air transportable, the equipment with and/or without weapons must also be compatible with the specified cargo aircraft.

(e) Equipment Application. How and where the equipment is used also determine design, i.e., storage, ground transport, air transport, munitions preloading, munitions loading, concrete or macadam surface, rough terrain, normal air base maintenance facilities--no or nominal maintenance facilities, etc.

(2) Design

Once the concept of operation has been defined and it has been determined that new equipment is necessary (after review of MIL-Handbook-300) then a review of the various types of lift mechanisms is made to determine which if any would be best to use as a design basis for the job at hand since it will eventually involve loading a weapon or weapons onto or into aircraft. Several types of lifting mechanisms now in use are

(a) Cantilever

(b) Boom

(c) Parallelogram

(d) Hoist

(e) Jackscrew

(f) Scissor

Of those listed, items (a), (b), (d), and (e) usually require an additional piece of equipment to transport the units to the aircraft for the loading. This, then requires a transfer operation which involves time and manpower. The parallelogram and scissor lift mechanisms are fairly well self-contained but problems sometimes arise due to bulkiness and noncompatibility with aircraft. If possible though, a single system should be used which could transport and load all weapons onto all aircraft and contain flexibility for use with future weapons and weapon systems. Among initial data needed are

(a) A list of weapons:

1. Conventional--Nonnuclear weapons data published by Development Armament Directorate, Air Force Armaments Laboratory, Eglin AFB, Florida.

2. Nuclear--Programmed Material Requirements for USAF/Missile Nuclear Bombs (SRD) published by AFWL (WLIR) and the related individual nuclear weapon drawings at AFWL (WLDM).

(b) A list of aircraft and their various strike configurations. These can be obtained from AFSC/ASD at Wright-Patterson AFB, Ohio, or from the appropriate Air Materiel Area/AFLC. The Green Book (SRD), Standard Aircraft Characteristics, SEG/WPAFB, Ohio, is a good reference. The system must be designed to be compatible with all the weapons and aircraft in all of their configurations if possible. In the past, ADC, SAC, and TAC have had different munitions handling and loading equipment. Feasibly, ADC and TAC type munitions equipment could be identical but the increased capacity required by SAC aircraft would probably require a larger, heavier item. Other parameters are

1. All weapon lengths
2. All weapon diameters
3. All weapon weights
4. Packages of weapons (i.e., MER, TER, Clip-In)

5. Proper Checking of visual accessibility points on weapons while on trailer or loader.

6. Proper tie-down straps or cables.

a. Fibrous material (Nylon, Dacron) stretches and is usually not acceptable.

b. Metallic bands or cables are usually acceptable but have a tendency to mar the surface of the weapon.

7. Tail fins in either X or + configuration.

Nuclear weapons have several Mods which can include different weights, CG, lengths, and tail-fin sizes and configurations.

(c) The air transport and storage of two or more nuclear weapons is desirable and sometimes requires a stacking capability. Tandem towing is a desirable feature to design into the trailer. Inertia brakes also prove their worth here. The trailer should be designed to successfully negotiate the applicable portion of the Munson and Perryman courses at Aberdeen Proving Ground, Maryland. All controls should be designed and located to reduce human error and decrease safety hazards. The towbar should be easily detachable for air-transport and storage. Munitions handling vehicles should have a static-ground-strap to eliminate possible build-up of static electricity. If the weapons protrude to the rear of the trailer, a bumper guard should be considered to preclude possible damage to the weapon.

The AFSCM-80-6, Handbook of Instruction for Aerospace Ground Support Equipment Designers (HIAGSED), provides very good general design criteria and valuable reference documents. (Ask for superseding document also, in case references are out-dated.)

(d) Lift Range--This is usually determined by the lowest weapon station of the listed aircraft with compressed struts and low or flat tires to the highest weapon station of the listed aircraft (probably a different aircraft) without compressed struts and with fully inflated tires. The designer shall keep in mind weapon systems in development and also future weapon systems.

(e) Capacity--This shall be determined by the largest single weapon or package of weapons required to be loaded onto an aircraft in a single operation plus a growth factor.

(f) Positioning--The fuel tanks, wheel fairings, wheel base and width, bomb bay doors, etc., may necessitate some delicate operator maneuvers

even with the most versatile designed systems. A parallelogram or scissor-type lift mechanism may require much more versatility in attitude adjustments than the boom or cantilever systems in order to be acceptable.

(g) Clearances--The equipment shall be designed for ground clearance and mobility, and yet low profile for maneuverability under and around aircraft. Aircraft configuration data should provide this information.

(h) Mobility--The equipment shall be in accordance with MIL-M-8090, the type and group being specified by the project engineer to obtain the desired functions.

(i) Transportability--The equipment shall be air-transportable in accordance with MIL-A-8421 but also capable of motor, rail, and sea transport.

(j) Maintainability--The equipment shall be designed structurally, pneumatically, hydraulically, electrically, and functionally to minimize maintenance and to reduce the frequency of maintenance cycles to a twice-yearly or longer basis on as many components of the system as possible. Try to incorporate solid film or permanent lubrication.

(k) Loading procedures--Design the equipment to streamline approach, positioning, and loading of weapons. Keep the loading checklist in mind and the parts of the weapons that must be seen and adjusted while on the loader.

(l) Supply--Use as many standard and existing parts as possible to reduce logistics requirements and minimize adding new components to the logistics cycle.

(m) Attitude Adjustments--Roll, pitch, yaw, longitudinal, lateral, and vertical movements at the weapons are necessary for smooth and efficient loading. These adjustments are shown on the following page.

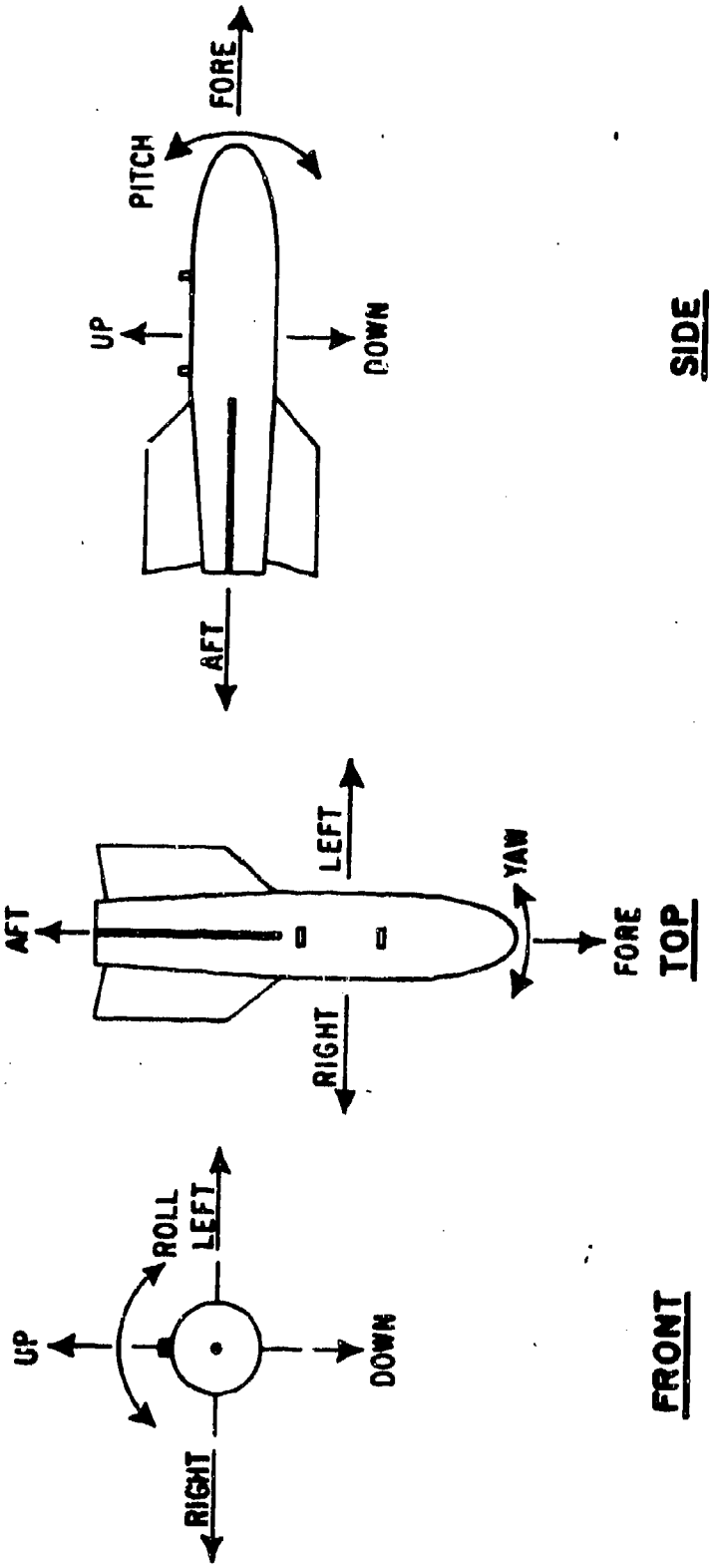
UP
ROLL
LEFT
RIGHT
DOWN
FRONT
AFT
LEFT
YAW
RIGHT
FORE
TOP
UP
PITCH
FORE
DOWN
AFT
SIDE

Compositely the movements are depicted below:

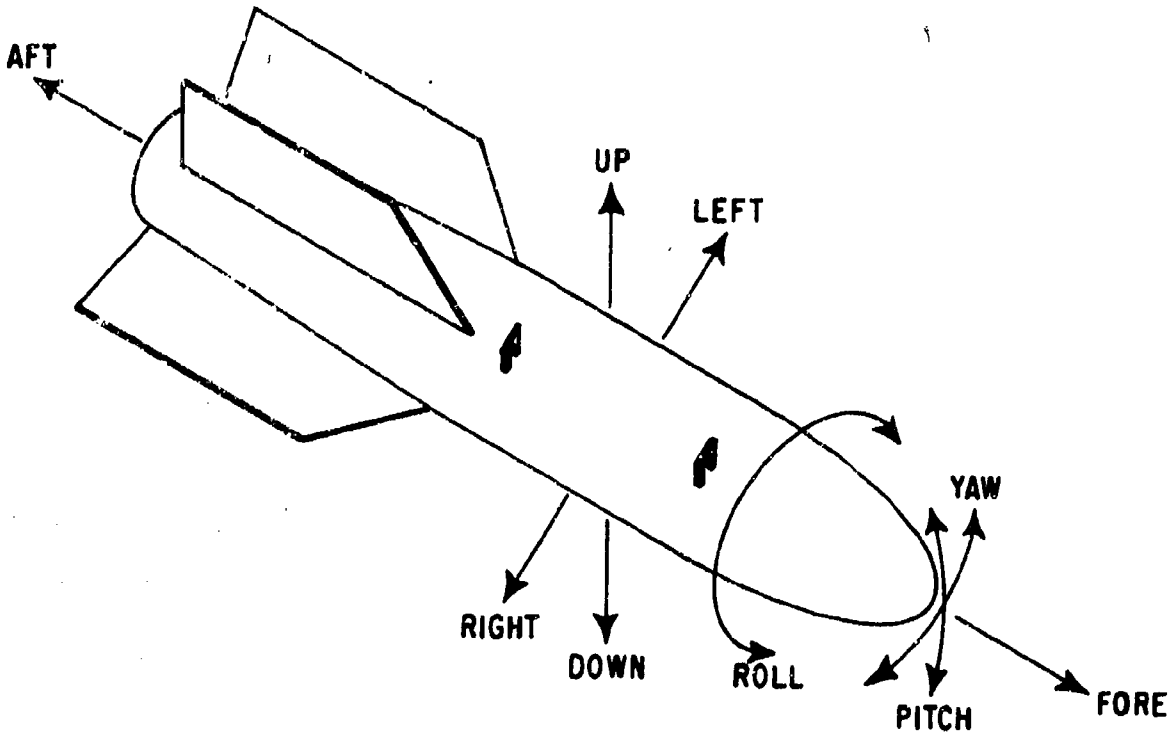

Particular care must be taken to ensure that the holding or cradling device holds the store securely (no shifting, rotation, longitudinal or lateral movements during any mode of transportation) without marring or damaging the store in any way. Usually tie-down straps of some kind are used. These tie-downs will keep the store secured from the time it is placed on the equipment until the store is latched onto or into an aircraft. There is usually very little clearance between the store and a bomb rack; therefore, the tie-down must be designed to be released after latching of store to aircraft.

Mechanical attitude adjustments must be adequate and very reliable. Many combinations are possible:

1. Yaw can be obtained by opposite use of fore and aft lateral adjustments.

2. Pitch can be obtained by opposite fore and aft vertical adjustments.

3. Roll can be obtained through a roller system; either the store on rollers or store and cradle on rollers.

Control must be precise to prevent damage to weapon electrical connectors, i.e., 1/8 inch to 3/16 inch maximum movement for any minute adjustment.

(a) Structure--AFSCM-80-6 HIAGSED, AFSCM-80-3 HIAPSD

Using the maximum rated capacity or load as a basis for structural design, the final load factors are determined from

1. MIL-M-8090, Ground Mobility
2. MIL-A-8421, Air Transportability
3. Detailed Equipment Specification or Statement of Work
4. MIL-T-15442 and MIL-T-22292 state that forklift trucks (including munition types) shall have a minimum static load of 300 percent rated load applied to the basic framework or chassis without permanent deformation or damage. The forks and arms on munitions loaders should have a 200 percent static load applied without permanent deformation because of the repeated load conditions imposed on the forks and booms or cantilever arms and the tendency of these vehicles to apply lift to the aircraft when loading a store.

5. Static and Storage Loads.

For condition 1 Design Load = payload × g

Yield Load = Design Load × Safety Factor

Ultimate Load = Yield Load × 1.5

For condition 2 (Usually crash condition being worst):

Ultimate Load = payload × g (deformation allowable but weapons must be held)

For condition 5 (Static or Storage)

Design Load = payload

Yield Load = Design Load × Safety or creep load factor

Ultimate Load = Yield Load × 1.5

The lift arms of the equipment should not support the loads for mobility or air transportability but only for loading and may not have to be as severely designed as the running gear and chassis or frame.

Types of terrain mobility and load requirements will determine the kind of tires to be used on the equipment. The tires and clearance requirements will then help to determine the rest of the running gear including axles, spindles, etc., as appropriate. Munitions trailers have to be designed for the point loads caused by weapons and the uniform loads of general cargo. This point load design becomes important when magnified by g loads during transportation.

Many of the general design requirements are contained in MIL-M-8090 and MIL-S-8512. MIL-Hdbk-5, Strength of Metal Aircraft Elements, is a good reference document for structural properties of materials.

(b) Power Supply--AFSCM-80-6 HIAGSED

1. Engines--In accordance with MIL-E-11275, MIL-S-8512 or any engine equaling or exceeding these requirements. Subject to approval of USAF project engineer.

2. Manual--In accordance with applicable section of MIL-S-8512.

3. Electric--Motors in accordance with MIL-S-8512, Specifications CC-M-635 and CC-M-641, and MIL-M-8709; systems in accordance with MIL-S-8562, MIL-E-25499, and MIL-W-5088.

(c) Hydraulics--AFSCM-80-6 HIAGED, MIL-S-8512, MIL-H-5440 Type I. Besides adhering to these general design guidelines, the hydraulic system should have fail/safe features and forced synchronization if more than one hydraulic lift arm is involved. Hydraulic proof load under MIL-H-5440 shall be defined to be: No leakage and no permanent deformation. Burst load shall involve permanent deformation and some leakage but the item shall not break, i e., reach ultimate. Systems for nuclear weapons should have a dual-cylinder system. By fail/safe we mean that if one cylinder fails, the hydraulic system on that side shall not cause the load to drop. The opposite cylinder and the structural members shall hold the load. This can be accomplished by use of counterbalance valves or remotely operated check valves near the cylinders plus structural design. Fail/safe design can also be accomplished by using cylinders having 4 chambers instead of 2. Thus if a holding chamber ruptures, the second holding chamber, although overloaded can hold the load for that side.

Forced synchronization can be obtained by several methods:

1. Common lines to both cylinders

2. Mechanical linkages

3. Cross feed from exit fluid chamber of one cylinder to entry fluid in the chamber of the other cylinder. This works for chamber of the same volume and generally for multichambered cylinder (i.e., 4 chambers per cylinder). The drift rate should be controlled to 0.02 inch or less per hour. This will generally require fairly tight tolerances or seals on some of the hydraulic equipment. Drift rate is the vertical travel of the weapon on the loader.

The weapon(s) should be deliberately raised and lowered. This means that lowering the weapon by operating the controls is not possible unless power is applied to lower the load. Counterbalance valves function well in this respect except that the standard commercial items usually have a leakage rate not acceptable to meet the drift rate standards. An orifice or other restriction is usually placed in the down line to control the normal descent speed. Hydraulic fluid specified for USAF use is according to MIL-H-5606. Pressure relief valves should be included in the system to preclude overpressures. Overpressures can come from

1. Lifting a store up to a bomb rack and then continuing to lift to latch the hooks. (This also entails trying to lift the aircraft in many instances and overloading the hydraulic pump and general system.)

2. Crossfeed from one chamber to another chamber can, in certain conditions, cause two chambers on one side to work against one chamber on the opposite side, thus getting double the pressure in one chamber.

3. Malfunctions or blockages in the system.

It is desirable to have pressure relief valves near the hydraulic pump and near the cylinder chambers for the reasons mentioned above. Usually, the less the system pressure, the less the maintenance and the safer and more reliable the system. Powered systems should incorporate a manual back-up method to allow the system to be returned to a neutral position in case of power failure or to allow the emergency loading or unloading of an aircraft when power is not available. For transport and storage, the hydraulic system should be structurally supported. The hydraulic system should incorporate a self-bleeding system so there will be no air bubbles or gas in the system. A very simple hydraulic system is the most desirable, if attainable, without sacrificing any mandatory functions. With the advances in synthetic (Teflon) "O" rings and seals for hydraulic systems many of the storage and maintenance problems with cracked and chipped parts will disappear and thus ease the logistics, maintenance, and manpower costs.

(d) Pneumatics--AFSCM-80-6 HIAGSED, MIL-S-8512 and MIL-P-5518 will provide design guidance.

(e) Vehicle Shock and Vibration Mitigation--The shock and vibration factors which must be considered in any ground transport include two basic problems:

1. Reduction of all shocks and vibrations to 3 g or less in the very low frequency range; 0.25 to 300 cps.

2. Maneuverability of vehicle to permit easy negotiations on all roads at specified speeds.

Definitions of suspensions are:

1. Soft suspension = Low spring rates and large static deflection.

2. Stiff suspension = High spring rates and small static deflection--load stability is improved in this method.

It is possible to suspend the "load" with one system (soft) and isolate the trailer from the running gear with the other (stiff).

Mobility and stability both of empty and loaded trailers must be considered. Stability of stores on trailer requires a high spring rate. This provides maneuverability for the vehicle but the high spring rate will not dampen the lower frequency vibration out of the system.

A second soft system to dampen these low frequency vibrations should be supplied. Low tire pressure could accomplish this but tire heating, additional system friction, and reduced stability usually make this unsatisfactory. Instead, a soft suspension near the CG of the store or load and its support structure should be provided. Placing the soft suspension near the CG and support structures tends to maintain stability and reduce turning radius effects. The critical range of frequency for trailer system mobility is approximately 0.25 to 300 cps.

The suspension system can cause additional accelerations, so a damping factor must be designed or incorporated to resist movement of the suspension system. This damping factor can be constant or variable.

The spring rate, damping, and ratio of forcing frequency to natural frequency are expressed as transmissibility.

Some types of suspension are

1. leaf
2. torsion bar
3. coil spring
4. air spring

The larger the tilt angle, the more unstable the trailer becomes and the less its resistance to overturn. This depends on spring stiffness, turn radius, vehicle speed, M_R, M_O, and location of center of suspension system. M_R and M_O are resisting and overturn moments respectively. The desired transmissibility will determine the ratio of the impact frequency to the natural frequency.

3. General

The wheels of a parallelogram or scissor-type lift mechanism may require 90 degree rotation. This allows sideward travel to achieve compatibility with those aircraft that would have interfering structures for a forward approach. Additionally, to meet the ground clearance requirements of MIL-M-8090 and still be able to load weapons onto external bomb racks of low clearance aircraft, the main chassis of the weapon trailer may be required to be built so that it can be lowered to ground level.

To eliminate towbar and axle breakage, an oversteering device on the towbar assembly is desirable. This allows a very sharp cramping turn by letting the towbar travel more after the wheels have been turned to their maximum angle. Inertia-actuated hydraulic brakes are desirable with the feature of stopping forward movement and yet being able to back up the trailer when using a tow vehicle. Since no attachments are necessary to the tow vehicle for the brake system, this allows a large variety of tow vehicles to be used.

During ground transport the weapons are allowed to protrude over the front and rear of the trailer to some extent; however, care should be taken to make sure that no towbar or tow vehicle interference with the weapons occurs either to the front or rear of the trailer. No protruding of any part of the weapon may occur from the sides of the trailer or transport vehicle.

Vehicle weight and size should be kept to a minimum consistent with an adequate safety factor for all imposed loads or environmental conditions. Dry film or permanent lubrication on all parts is desirable. This will eliminate frequently required maintenance checks and reduce the time on those that are needed. Standard MS, NAS and AN parts should be used in preference to commercial parts. Design as few new parts as possible. All parts having the same part number must be functionally and dimensionally interchangeable. Drawings must be in accordance with MIL-STD-100 Class I and Part II of AFWL/WLI Exhibit 2. Specifications shall be according to Part III of Exhibit WLI-2. Nomenclature, nameplate, and marking requirements shall be in accordance with Part IV of Exhibit WLI-2.

Tie-downs are a special problem. It can be difficult to keep a nuclear weapon or weapons secured to the trailer under all possible conditions without shifting, rotation, or marring of the weapon and at the same time keeping visual accessibility points handy for loading checklist T.O. procedures. Each project

engineer must cope with this in his own way. A review of existing equipment is sometimes helpful. Additionally, enough tie-down rings must be provided to secure the trailer to a cargo aircraft floor under any possible conditions. Several things must be considered:

a. Cargo Aircraft Floor Plans (Technical Orders (WLAW-5))

b. Strength of cargo tie-down rings at various angles relative to the vertical axis of the aircraft ring.

c. Height of trailer tie-down ring above aircraft floor.

d. Trailer tie-down rings attached to adequate trailer structure for worst possible load conditions.

e. Adequate number of tie-down rings properly located.

f. Use of shoring for air shipment.

g. Tie-down chains are very rigid and unless the trailer and/or tires deform to distribute the load, any single set of chains on each side of trailer can take approximately 80 percent of the load imposed.

h. Interview between design engineer and test engineer at AFSWC/SWT to discuss cargo-aircraft tie-down problems.

Where a missile or rocket in the fully assembled condition is to be transported by aircraft, consideration must be given to restraining the warhead section of the weapon in the event of an inadvertent ignition of the missile motor. Any request or requirement for air transport of missiles or rockets must be fully coordinated with AFWL/WLAS before and during work on this type of project.

All hydraulic and pneumatic components will be required to withstand proof loads called out in the applicable specifications without permanent deformation or leakage. These parts must also withstand the burst loads without complete failure; some leakage will be allowed. The weapons can be lowered but not dropped (no damage to weapons). These systems must withstand 1000 continuous cycles without damage or excessive heating. (See applicable specifications for oil, gas, environment.)

SECTION IV

TESTING

Testing can be accomplished at the contractor's plant under government supervision or at AFSWC/SWT. A test plan written by the AFWL project engineer shall have the criteria and procedures for testing and shall request a formal test report upon completion of all tests.

1. Test Plan

   a. Establish priority

   b. Establish time table for all phases

   c. State what equipment is needed and who should supply it

   d. Outline order of testing

   e. Determine instrumentation

      (1) Strain gages

      (2) Photostress

      (3) Stress Coat

      (4) Accelerometers--three axes

      (5) Other

   f. Determine documentation

      (1) Photography

      (2) Graphs, drawings, and sketches

      (3) Written descriptions and results

   g. Outline procedures for each test and results desired

   h. Outline acceptance and rejection criteria for each test.

   i. Determine equipment disposition upon completion of tests.

2. Test Conditions

a. Test conditions applicable to contractor on prototype and production items shall be

(1) Examination of product to determine compliance with detailed specification including materials, workmanship and applicable sub-specifications.

(2) Conformance to drawings inspection.

(3) Continuity check on all electrical circuits.

b. Test conditions applicable to both AFSWC/SWT and/or testing done at the contractors plant shall be

(1) Lift System Capability Test (if applicable). (With and without maximum load)

(a) Relief valve settings check

(b) Time required for lifting and lowering

(c) Synchronization check

(d) Drift rate

(e) Maximum and minimum lift distances attained

(f) 1000 continuous cycles, loaded, without permanent distortion, deformation, leakage, other damage, or excessive heating; reference MIL-H-5440 and subsidiary specification

(g) Raise load to maximum height, using manual back-up system. MIL-S-8512 shall apply

(2) Store Attitude Adjustment, Test With and Without Load.

(a) ± Roll

(b) ± Pitch

(c) ± Yaw

(d) ± Lateral

(e) ± Longitudinal

(f) ± Vertical

(3) Brake system, steering, castering if 90 degrees rotatable, and road tests in accordance with MIL-M-8090 specifying type and group classification. Certify that weapons do not shift or rotate during transportation tests.

(4) Proof Load Tests (Static)

(a) Structure in accordance with the detailed specification starting at 100 percent increasing by 10 percent increments until maximum static proof load is reached. Also to MIL-M-8090 and MIL-A-8421. Relief valves shall be removed from system for this test (if applicable).

(b) Hydraulics in accordance with MIL-H-5440.

(c) Pneumatics in accordance with MIL-P-5518.

(5) Air transportability tests in accordance with MIL-A-8421. Certify that weapons do not shift or rotate on all except crash tests. (Weapons will remain secured to equipment under any conditions.)

(6) Environmental tests in accordance with

(a) MIL-STD-810 Table 1, Ground B or C as applicable. Operation of equipment (lifting, lowering, attitude adjustments, etc.) after each test while stabilized at test condition shall be with maximum load and in accordance with paragraph (1) above.

(b) Icing Test. Temperature and relative humidity tolerances shall be in accordance with MIL-STD-810. Equipment with maximum load shall be tested as follows:

1. Place equipment in chamber having a temperature of 49°C (120°F) and a relative humidity of 95 percent. These conditions shall be maintained for a period of 48 hours.

2. Move equipment into a rain test chamber unless same chamber as 1. A temperature of 20°C (68°F) shall be maintained in the rain test chamber throughout this portion of the test. A simulated rainfall of 4 (±1) inches per hour shall be produced by means of a spray nozzle of such design that the water is emitted in the form of droplets rather than a fine mist. The temperature of the water shall be maintained between 11°C (51.8°F) and 20°C (68°F). The rainfall shall be dispersed uniformly over the test area. The trailer shall be subjected to these conditions for a period of 2 hours.

3. Immediately after being subjected to the conditions of 2, the chamber shall be cooled to a temperature of -18°C (0°F). The trailer shall remain in this condition for a period of 48 hours.

4. Immediately after 3 while stabilized at -18°C (0°F), all mechanisms shall be operated in accordance with paragraph b(1) Lift System Capability Test. Any failure, permanent deformation, or damage will be cause for rejection or test failure.

(7) Fit Tests

(a) All weapons and weapon packages on equipment. Determine tie-down configurations.

(b) Load (if applicable) all weapons and weapon packages on all aircraft in all weapon and fuel tank configurations.

(c) Load equipment, with and without stores as applicable, on all cargo aircraft. Determine tie-down configurations.

(8) Fail/Safe Tests

(a) Remove various hydraulic or pneumatic lines to simulate various possible system failures. The load shall be maintained where positioned.

(b) Overload system to activate relief valves. No damage shall occur.

3. Test Plan Coordination

a. AFWL/WLDM, Kirtland AFB, NM
b. AFWL/WLD, Kirtland AFB, NM
c. AFWL/WLAS, Kirtland AFB, NM
d. AFWL/WLAW, Kirtland AFB, NM
e. AFWL/WLP, Kirtland AFB, NM
f. AFSWC/SWLPR, Kirtland AFB, NM
g. AFSWC/SWT, Kirtland AFB, NM
h. AFSWC/SWTTT, Kirtland AFB, NM
i. ATZC/AFATL, Eglin AFB, Fla (if applicable)
j. ASD, WPAFB, Ohio (if applicable)
k. SEG, WPAFB, Ohio (if applicable)

4. Test Report

If a priority qualification is necessary, the project engineer should specify in the test plan that he shall receive a copy of the final draft report and when he needs it. If the final report needs to be written in a format usable as a basis for publishing weapon tie-down to equipment, equipment to cargo aircraft,

or weapon loading procedures in Technical Order form, this should also be specified in the test plan. Any distribution of the final report desired by the project engineer should also be specified in the test plan.

5. Functional Evaluation Report

Usually based on the final test report and for the engineering agency or internal distribution unless required or specified by other agencies.

SECTION V

UNSATISFACTORY REPORT ENGINEERING

An item placed in tentative standard status and developed by AFWL should remain the engineering responsibility of AFWL for approximately one year after release of production items to operational command. The AFLC/AFSC Form 1 (Advance Procurement Data Worksheets) must be completed by WLDM and released to the procurement agency through WLIR. Specify that the First article shall be sent to AFWL for evaluation and retention for Unsatisfactory Report (U.R.) Engineering purposes. If the U.R.'s originating in the field are few and varied, or none, then the item will be placed in standard status and engineering responsibility and records will be transferred to the appropriate AFLC Air Materiel Area (AMA). (For Aerospace Ground Equipment (AGE), this is normally SAAMA, Kelly AFB, Texas.) U.R. Engineering consists of analysis and evaluation of failures of equipment and its components while in use by an operational command. These failures are reported to the responsible engineering agency for evaluation and necessary design modifications. Transfer of engineering responsibility is a major air command item (i.e., through major command channels) and must be acceptable to the receiving agency. This action will be initiated by WLDM through WLIR.

SECTION VI

NUCLEAR SAFETY

1. Design Criteria References

a. The two reference documents for Nuclear System Safety Design are:

(1) FC/12630222 (SRD) Design Guidelines for Nuclear Weapons System Safety, published by Headquarters Field Command, Defense Atomic Support Agency, Sandia Base, New Mexico.

(2) AFSCM 122-1 Nuclear Weapons System Safety Design Manual.

b. Reference 1.a(1) has only general consideration and no specific requirements for ground handling and loading systems. Reference 1.a(2) has a paragraph 11 related to AGE, but references AFSCM-80-6 for safety design consideration. Other good references for related data on explosive handling and nuclear weapons are T.O. 11N-20-12, AFM-127-100, and TO-00-25-212.

2. Acceptance Criteria

a. Item must pass structural tests.

b. Item must pass environment tests.

c. Shock and/or acceleration loads in any axis during mobility tests shall not exceed 4 g or a lesser amount if particular weapons so require.

d. Weapon must not rotate or shift during any normal transportation mode. (Air or ground)

e. Tie-down straps or cables shall not mar or damage weapon during any normal mode of transportation.

f. Deformation is allowable under crash load condition but the weapon or weapons must not break loose from the equipment. (Yield but not ultimate)

g. System shall be fail/safe. Fail/safe is defined as: The weapon or weapons shall be controlled and held despite all power failures and all system failures except those deemed most improbable by the AFWL/WLDM and/or WLAS.

h. Drift rate shall be 0.02 inch per hour or less to preclude damage to electrical connectors or to the weapons.

i. Item must pass mobility tests.

j. Hydraulic and pneumatic must incorporate safety devices to preclude overload of system and possible failure which would cause damage to weapon.

k. If weapon is held by two or more independent arms or structures, they shall be synchronized to provide spontaneous movement of all applicable parts and also provide positive support if one part of the system should fail.

l. Ensure item is designed to be compatible with nuclear weapons and will not damage them simply by handling or loading.

m. Design equipment so that necessary visual accessibility points can be easily seen without moving the weapon while on the equipment.

n. Incorporate a manually operated back-up system for loading equipment so weapons can be returned to transport position in case of power failure.

3. Certification Procedures

After the equipment has successfully completed all the tests specified by the AFWL project engineer and the final test report has been distributed, WLDM should initiate a letter request for WLAS to review and analyze the equipment and final report, and interview the project engineer and perhaps the test engineers. If WLAS is satisfied, then the equipment is considered to be Nuclear Safe. WLAS may request the Nuclear Weapon Safety Study Group (NWSSG) to include a review of the equipment in their next meeting. The AFWL project engineer will probably be required to present a briefing to the NWSSG to provide background and a technical explanation of the system. The NWSSG compiles all of the information obtained during their review and consolidates it into a report which is sent to Headquarters USAF for approval. After the report is approved, the item is approved provided it has met board requirements and is so recommended. WLDM is on the distribution list to receive a copy of the report. After WLDM has received verification that the item is acceptable, it is placed into the Special Weapon Equipment List (SWEL); the Programmed Material Requirements (PMR); and in the applicable special weapon loading procedure Technical Orders. At this point the equipment is fully certified. The actual final certification of this equipment is a function of AFWL through WLDM.

SECTION VII

PROJECT TERMINATION TECHNICAL REPORT

Upon completion of an item development and prior to its engineering transfer to an AMA, an AFWL Technical Report (TR) should be written giving background, requirements or reasons for development, concepts, functions, design problems, test results, and present operational status of the items. This will preclude duplicate effort by another agency and provide this capability to any agency requiring it. Copies of the TR should be provided to the following.

AFLC/SAAMA, Kelly AFB, Tex
AFSWC/SWT, Kirtland AFB, NM
AFSWC/SWEH, Kirtland AFB, NM
AFWL/WLIL, Kirtland AFB, NM
AFWL/WLDM, Kirtland AFB, NM
AFATL/ATZC, Eglin AFB, Fla
ASD, WPAFB, Ohio
SEG, WPAFB, Ohio
SAC, Offutt AFB, Neb (as applicable)
TAC, Langley AFB, Va (as applicable)
ADC, Ent AFB, Colo (as applicable)
USAFE, New York, NY 09633
CINPACAF, APO San Francisco, Calif 96553
DDC/TIAAS, Cameron Station, Alexandria, Va 22314 (as applicable)
AFWL/WLAW, Kirtland AFB, NM
AFWL/WLAS, Kirtland AFB, NM

Other distribution, as desired, can be obtained from a WLIR distribution list. The number of copies to each agency shall be determined by WLDM and WLIR.

SECTION VIII

OPERATIONAL CAPABILITIES

1. Bomber Aircraft

a. SAC presently uses the MHU-7/M bomb lift trailer (figure 1) to transport and load nuclear weapons into the B-52 and B-47 aircraft, and the MHU-12/M Trailer (figure 2) to transport, and the MJ-1 Bomb Lift Truck (figure 3) to load nuclear weapons onto the B-58 aircraft.

b. The MHU-33/M Bomb Lift Trailer (figure 4) is programmed for SAC usage for both conventional and nuclear munitions on the B-52 aircraft. Its capacity is approximately twice that of the MHU-7/M Trailer now in use.

c. A study is now being conducted to possibly provide SAC with a new bomber aircraft, AMSA (Advanced Manned Strategic Aircraft). If the capability or dimensional requirements change significantly from the B-52, then a development to provide a new bomb lift trailer or truck must be initiated.

2. Interceptor Aircraft

a. ADC presently uses the MF-9 Bomb Lift Trailer (figure 5a) to load interceptor missiles and rockets into the F-106, and F-101B aircraft. The MF-9A Bomb Lift Trailer (figure 5b) is used to load the F-102 aircraft.

b. The YF-12A aircraft has been developed for possible application as an interceptor aircraft. Weapon handling and loading equipment has not been determined for this application. A possible weapon handling and loading system for the application is SEALS (Stored Energy Actuated Lift System) (figure 6). Since neither the YF-12A nor SEALS has reached final design configuration, final decision will have to be made at a later date.

3. Fighter Bomber Aircraft

The MJ-1 Bomb Lift Truck (figure 3) and the MHU-12/M Trailer (figure 2) are presently the primary munitions handling and loading system for nuclear weapons in TAC, USAFE, and PACAF. These are to be used to load the following aircraft: F-100, F-101, F-104, F-105, F-5 and F-4.

a. Programmed for future use with the fighter bomber commands are the MHU-83/E Bomb Lift Truck (figure 7) and the MHU-85/M Trailer (figure 8).

b. Possible future aircraft for the fighter-bomber commands are the A-7, F-111, and various V/STOL aircraft.

c. SEALS (figure 6) is presently under development and will provide the fighter-bomber commands with a composite air transport, storage, ground transport, and loading vehicle.

4. Navy and Marine Equipment

a. Aero-46A shipboard weapons loader (figure 9) is a 4500-pound-capacity item utilizing outriggers for stability, a swinging boom, and concentric cylinders at the table for vertical lift into bomb bays.

b. Aero-47A shore-based weapons loader (figure 10) is a 4500-pound-capacity loader very similar to the Aero-46A except that an operator's place has been designed into the Aero-47A.

c. SATS Loader A/S 32K-1 (figure 11) is a 4000-pound-capacity vehicle used by the Marine Corps very similar to the USAF MHU-83/E except the capacity of the MHU-83/E is 7000 pounds and has a table as well as lifting forks.

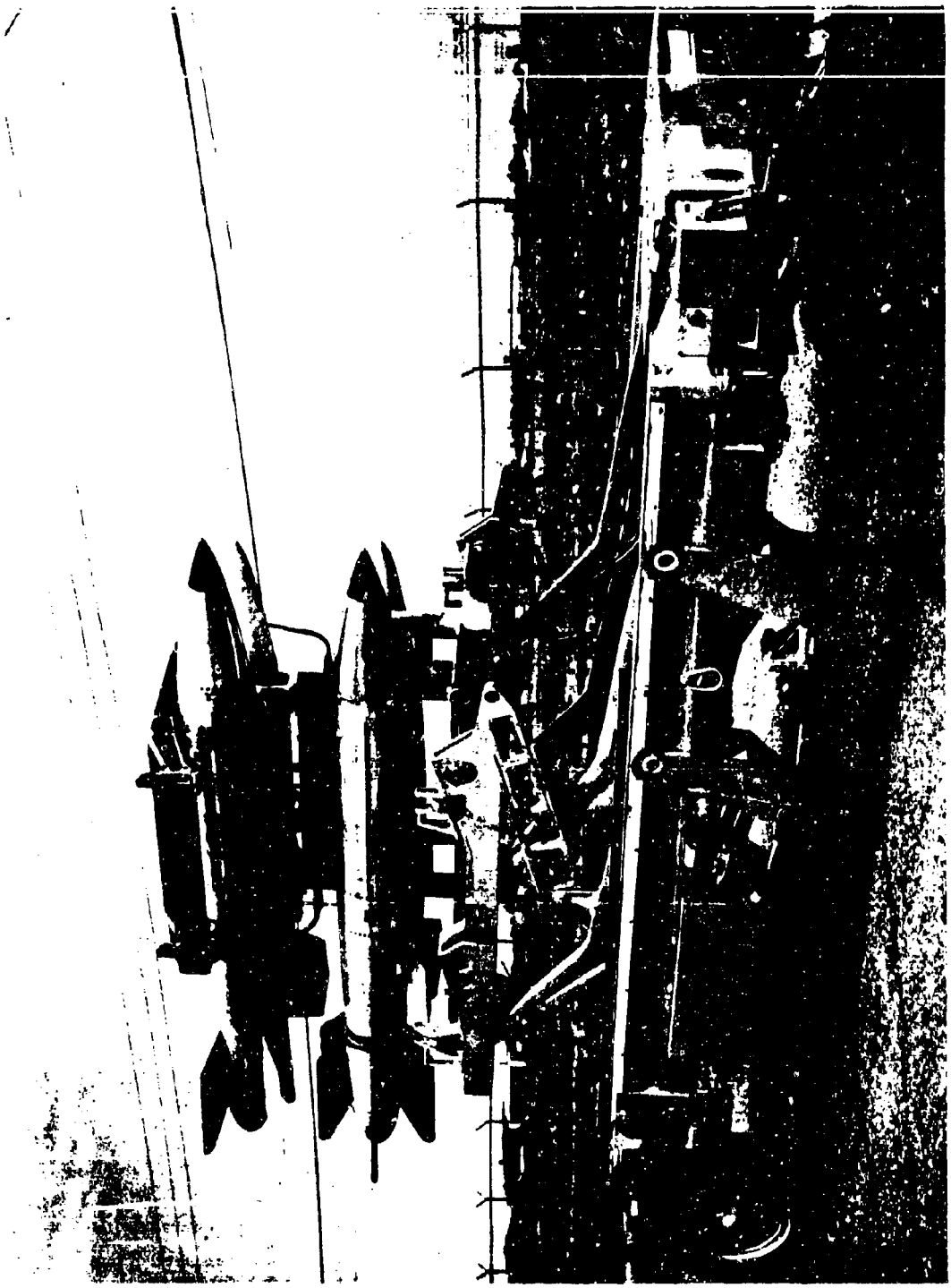

Figure 1. MHU-7/M Trailer.

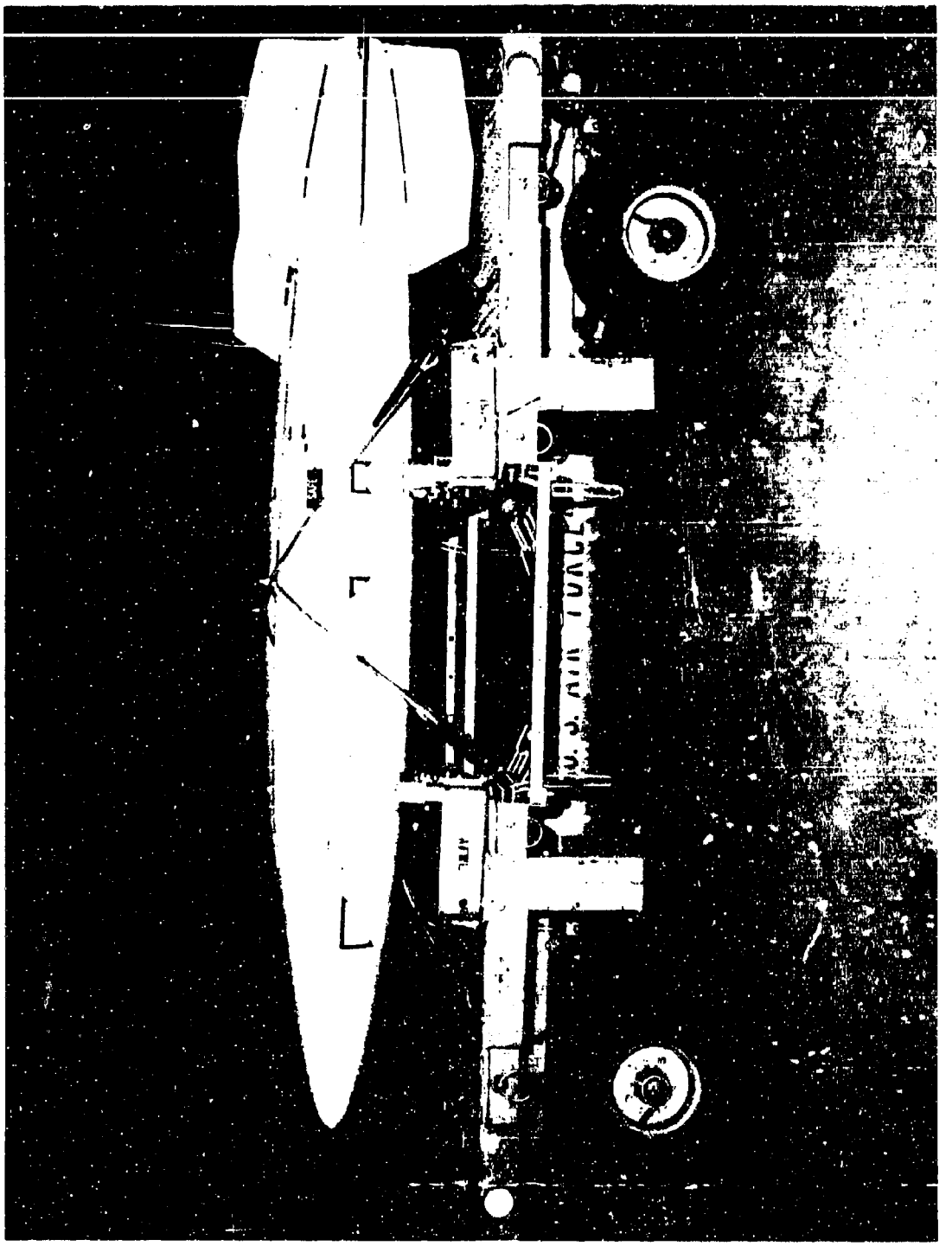

Figure 2. MHU-12/M Trailer.

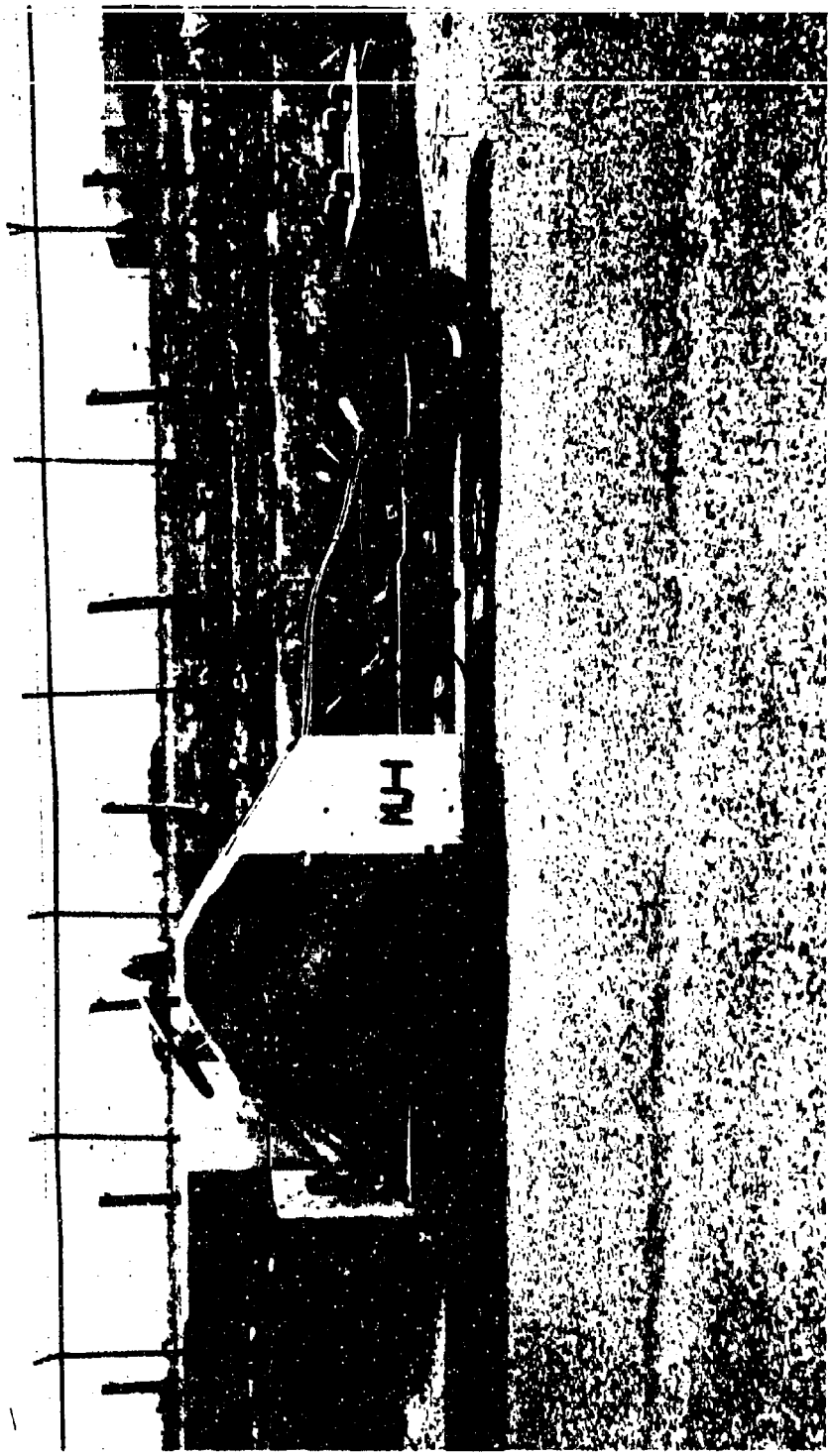

Figure 3. MJ-1 Bomb Lift Truck.

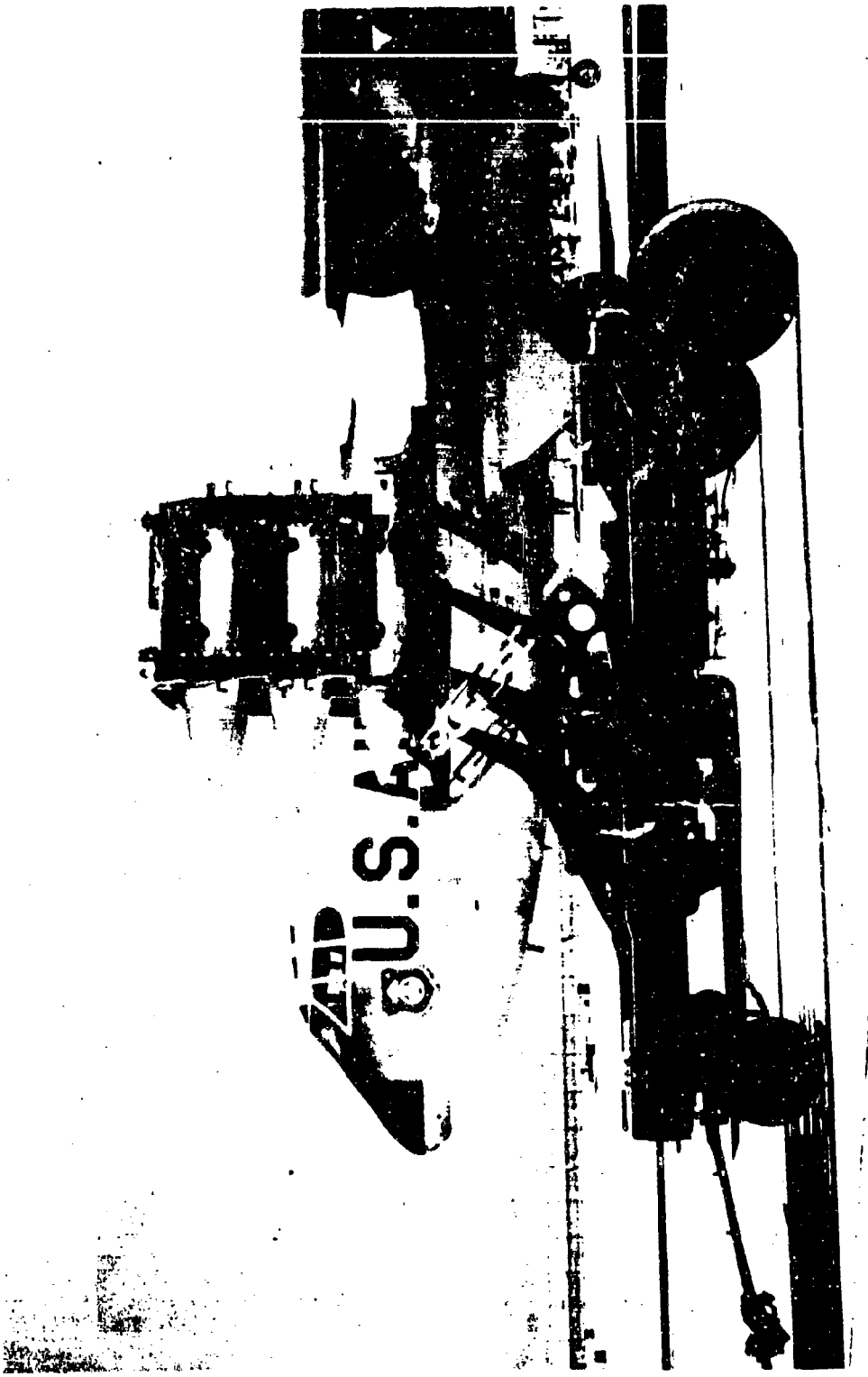

Figure 4. MHU-33/M Bomb Lift Trailer.

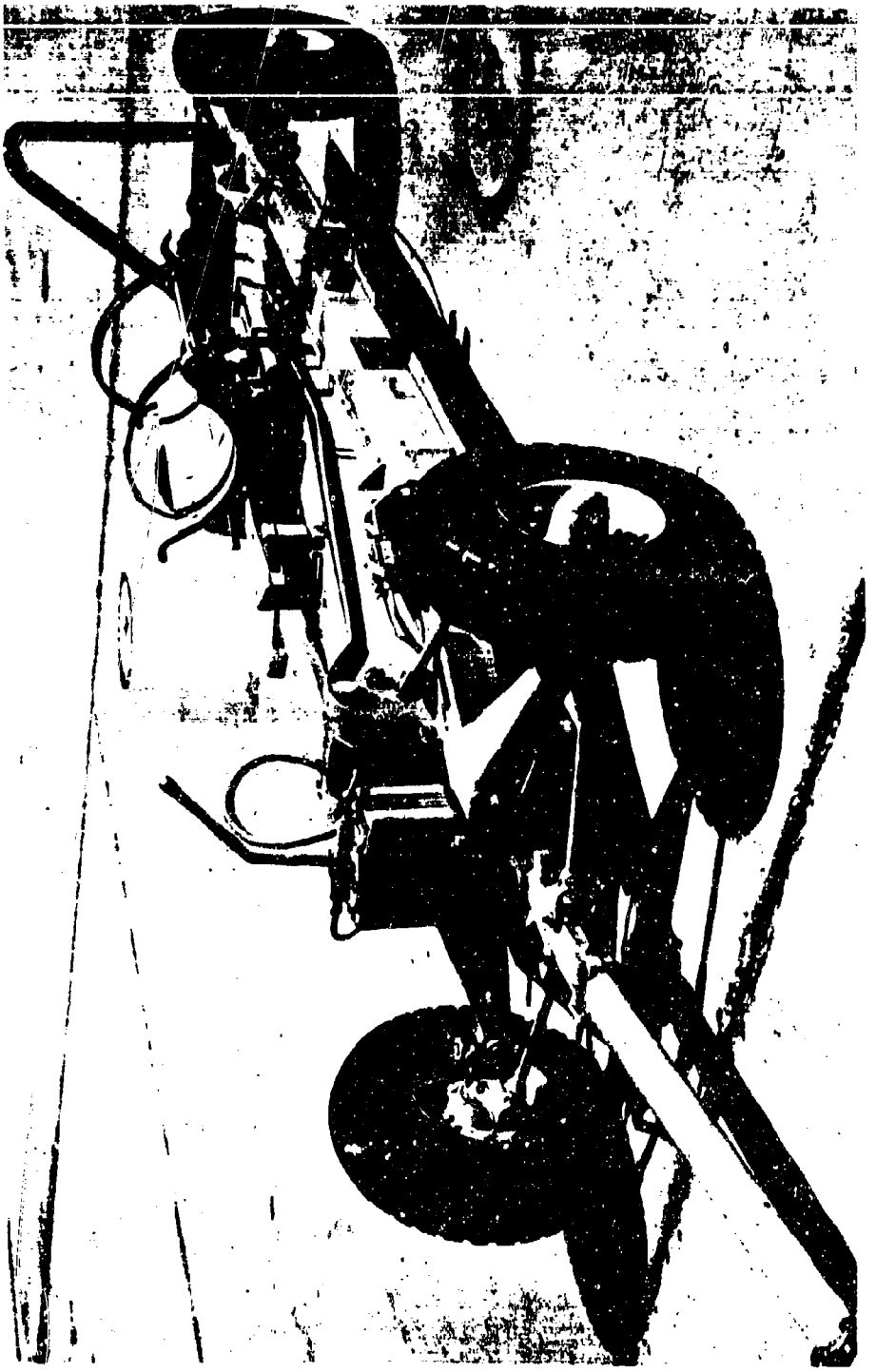

Figure 5a. MF-9 Bomb Lift Trailer.

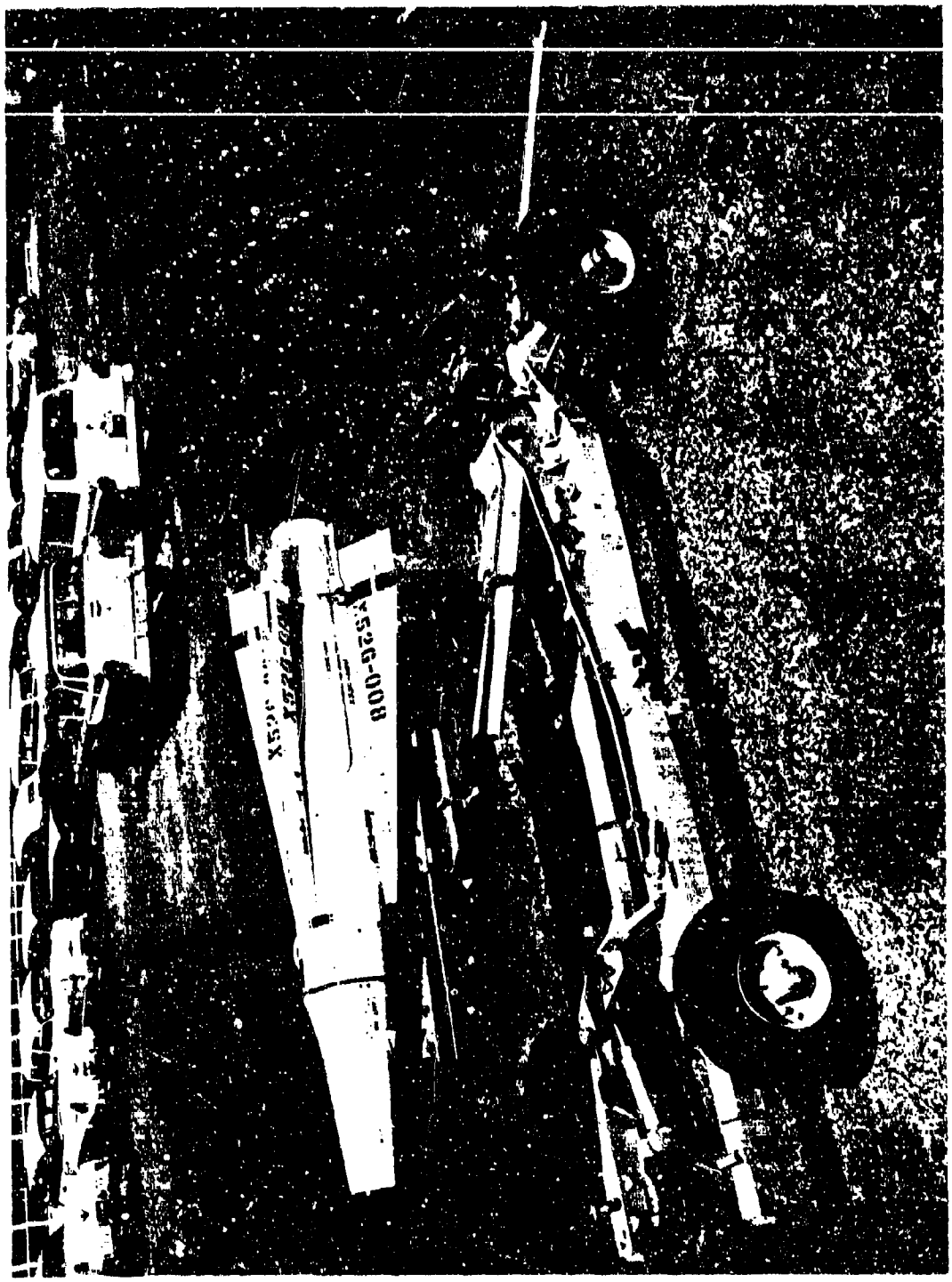

Figure 5b. MF-9A Bomb Lift Trailer.

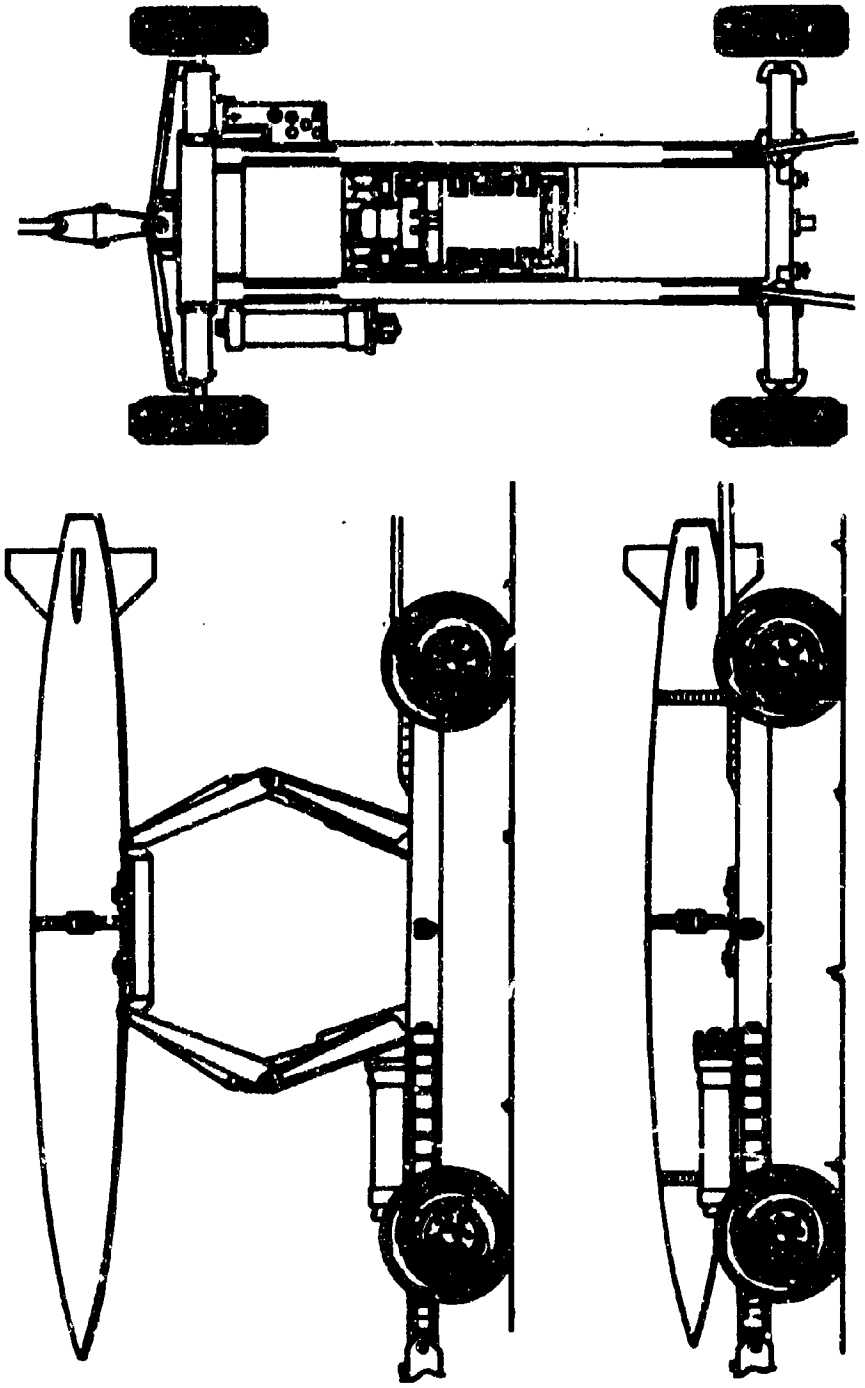

Figure 6. SEALS (Store Energy Actuated Lift System), MHU-92/M Bomb Lift Trailer.

a. Gas Generator.

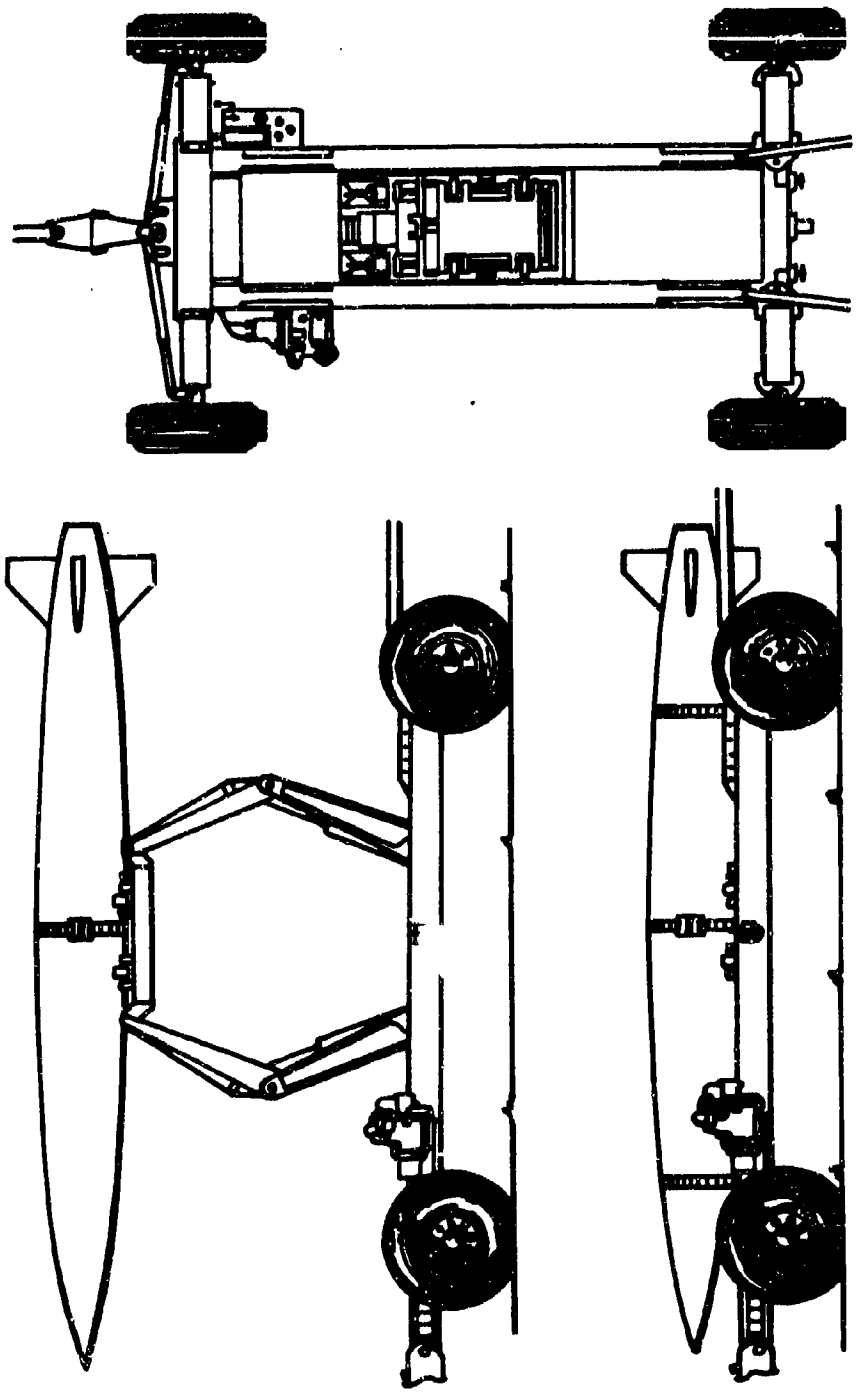

Figure 6. SEALS (Store Energy Actuated Lift System), MHU-92/E Bomb Lift Trailer.
b. Gasoline Engine.

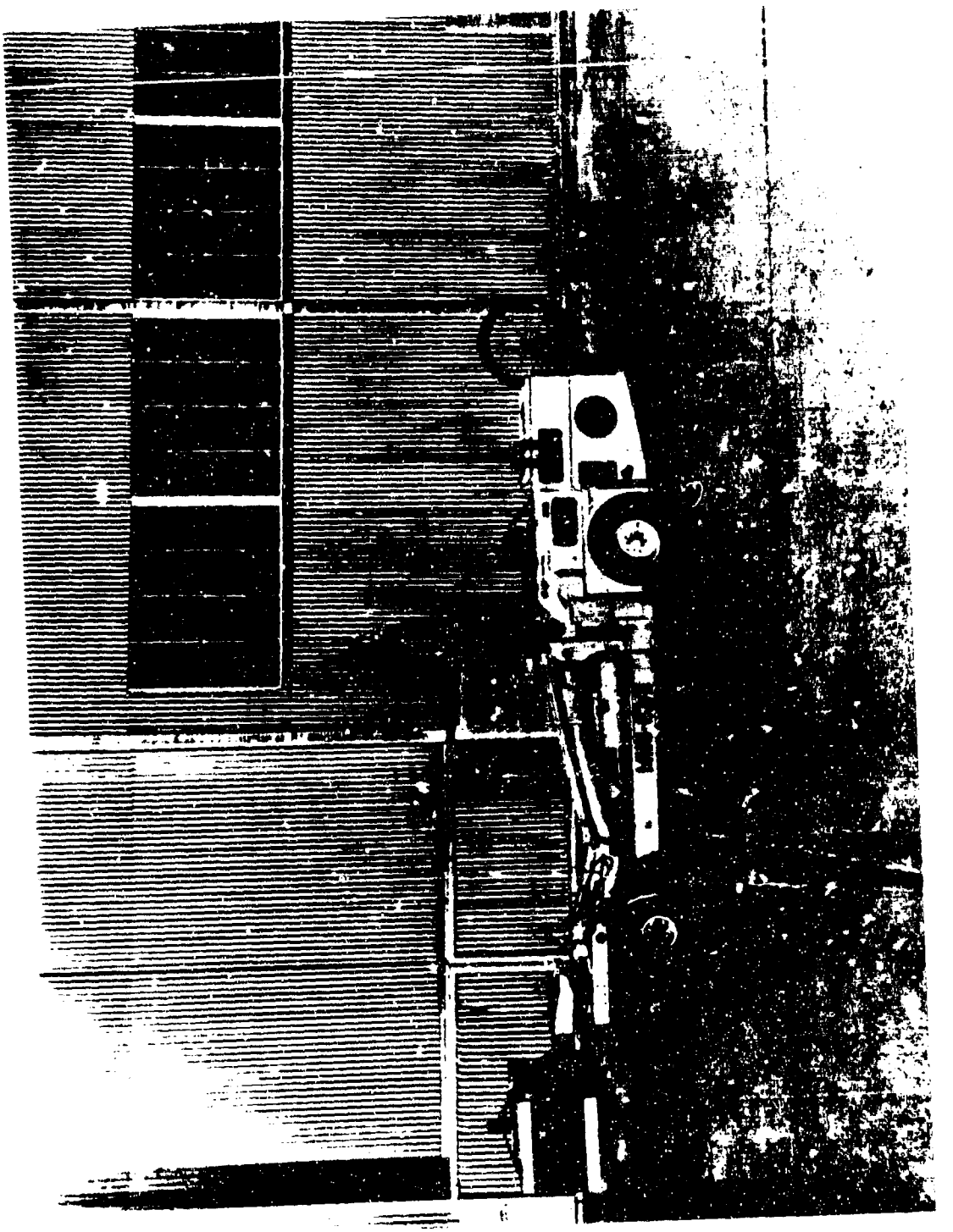

Figure 7. MHU-83/E Bomb Lift Truck.

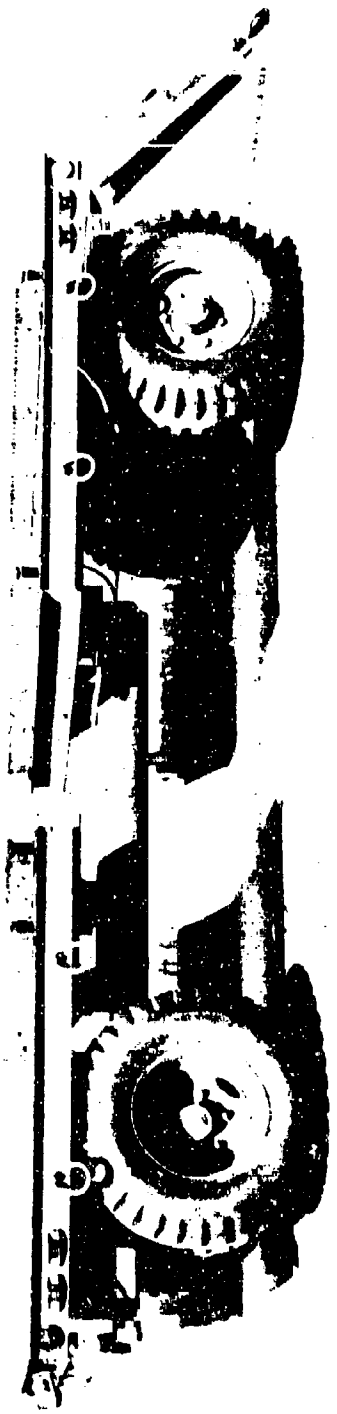

Figure 8. MHU-85/M Trailer.

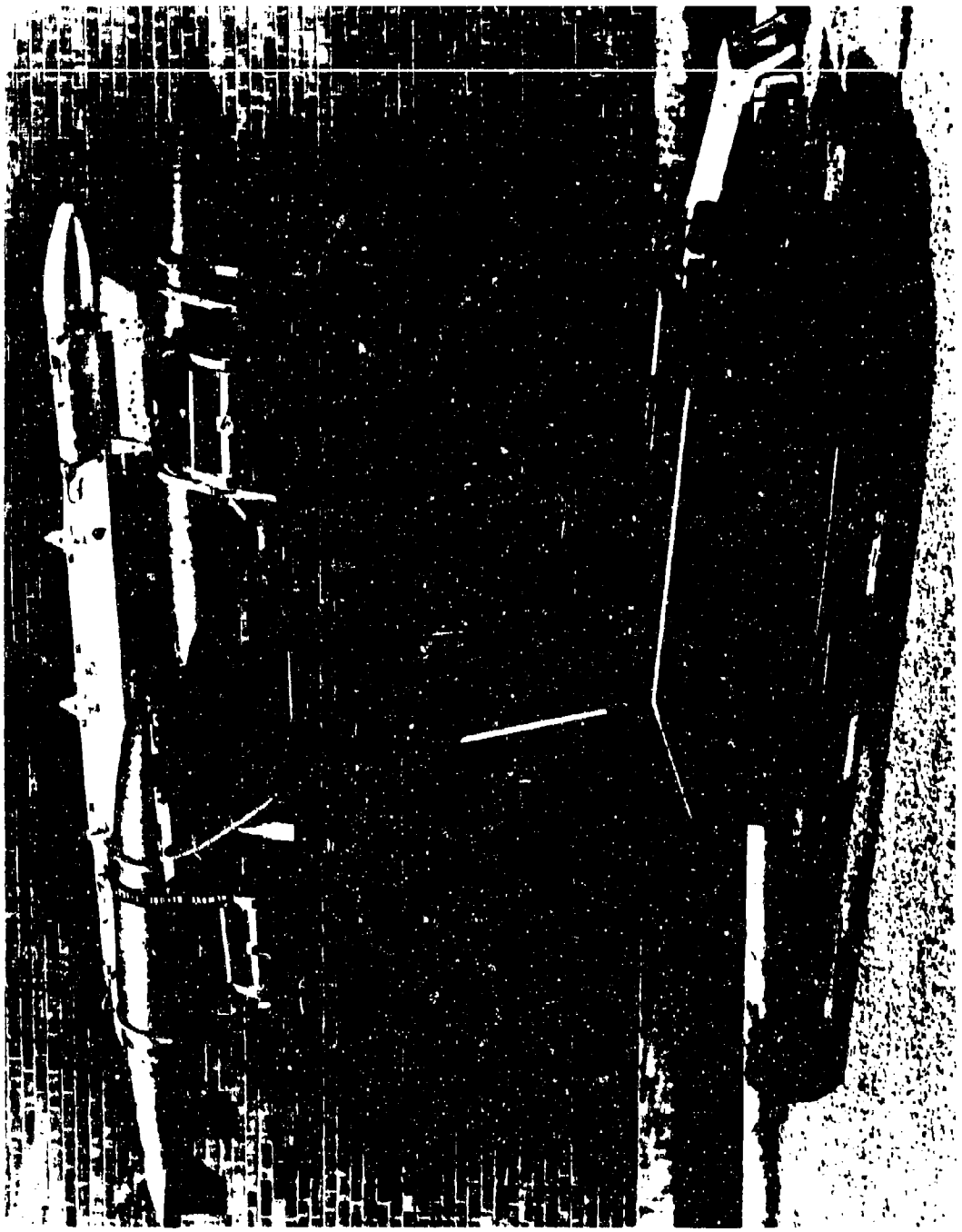

Figure 9. Navy Shipboard Aero-46/A Weapons Loader.

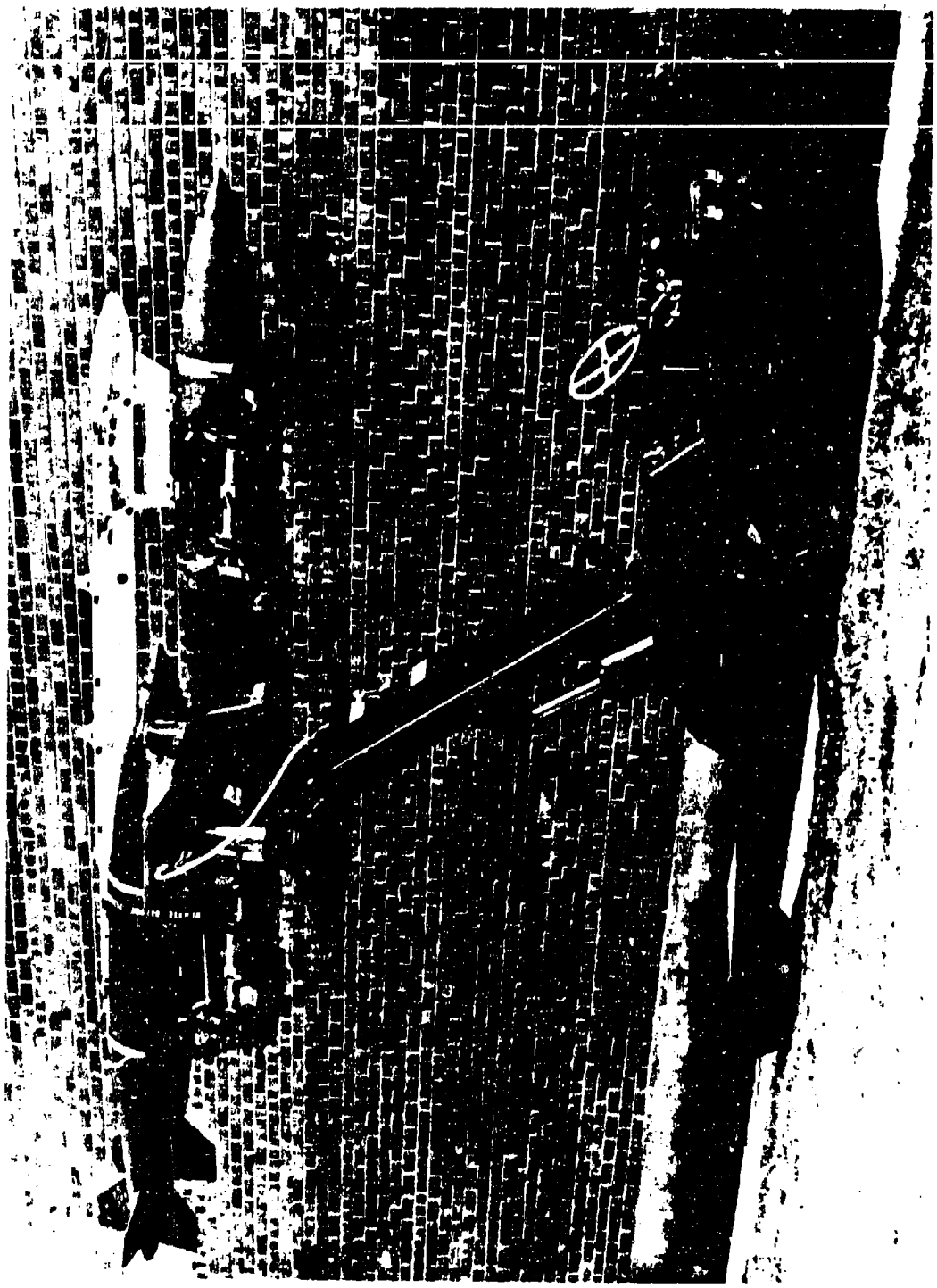

Figure 1C. Navy Shore-Based Aero-47/A Weapons Loader.

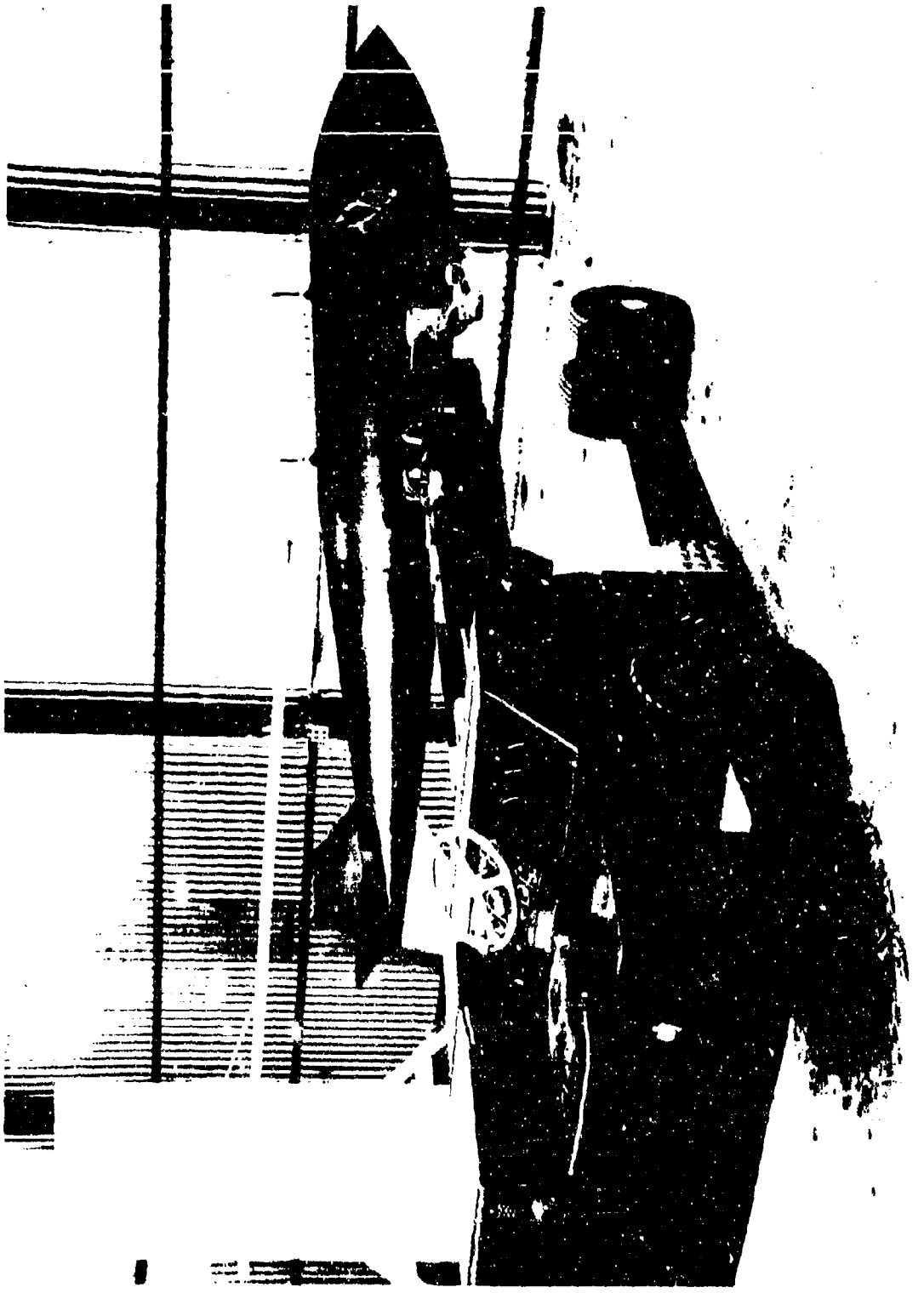

Figure 11. Marine SATS Weapons Loader A/S-32K-1.

SECTION IX

REFERENCE DOCUMENTS

Mandatory Items are marked with an asterisk.

	Federal Specifications
PPP-C-96	Cans, Metal, 28 Gage and Lights
CC-M-636	Motors, Fraction Hp, AC
CC-M-641	Motors, AC, Integral HP, 200 Hp and smaller
	Military Specifications
*MIL-D-1000	Drawings, Engineering and Associated Lists Form 1, Category E
MIL-T-7427	Trailers, Rail Type, General Specification for
MIL-W-5088	Wiring, Aircraft, Installation of
MIL-C-5424	Cable: Steel, Flexible, Preformed
*MIL-H-5440	Hydraulic Systems, Aircraft, Types I & II, Design, Installation, and Data Requirements for
MIL-A-5498	Accumulators, Aircraft Hydropneumatic Pressure
*MIL-P-5518	Pneumatic Systems, Aircraft; Design, Installation, and Data Requirements for
MIL-R-5520	Reservoirs; Hydraulic
MIL-N-7513	Nomenclature Assignment, Contractors Method for Obtaining
*MIL-W-8005	Wheels and Hubs, for Industrial Pneumatic Tires
*MIL-M-8090	Mobility Requirements, Ground Support Equipment, General Specification for
*MIL-A-8421	Air Transportability Requirements, General Specifications for
*MIL-S-8512	Support Equipment, Aeronautical, Special, General Specification for the Design of
MIL-M-8609	Motors, Direct Current, 28 Volt Systems, Aircraft, General Specifications for
*MIL-D-9412	Data for Aerospace Ground Equipment
MIL-M-9910	Technical Manual: Operation and Maintenance Instructions With Parts List for Quick Reaction Capability (QRC) Equipment
MIL-E-11275	Engine, Gasoline, Industrial Type, General Specification for
MIL-T-15442	Trucks, Lift, Fork, Gasoline, Pneumatic Rubber Tires
MIL-T-15445	Trucks, Lift, Fork, Gasoline, Solid Rubber Tires
MIL-T-22292	Truck, Lift, Fork, Weapons Handling Electric Powered

MIL-E-25499	Electrical Systems, Aircraft, Design and Installation of, General Specification for
*MIL-M-26512	Maintainability Program Requirements for Aerospace Systems and Equipment
*MIL-R-27542	Reliability Program for Systems, Subsystems, and Equipment
*MIL-H-27894	Human Engineering Requirements for Aerospace Systems and Equipment
*MIL-S-38130	System Safety Engineering of Systems and Associated Subsystems and Equipment, General Requirements for
MIL-V-45349	Vehicles: Combat and Special Purpose; Tactical, General Purpose and Special Equipment; Self Propelled and Towed, General Specification for
	<u>Military Standards</u>
*MIL-STD-100	Engineering Drawing Practices
MIL-STD-129	Marking for Shipment and Storage
MIL-STD-130	Identification Marking of US Military Property
*MIL-STD-143	Specifications and Standards, Order of Precedence for the Selection of
MIL-STD-268	Test and Inspection of Trucks, Lift, Fork, Gasoline and Electric
*MIL-STD-470	Maintainability Program Requirements
*MIL-STD-471	Maintainability Demonstration
*MIL-STD-756	Reliability Prediction
*MIL-STD-803A-1	Human Engineering Design Criteria for Aerospace and Equipment; Part 1, Aerospace System Ground Equipment
*MIL-STD-810	Environmental Test Methods for Aerospace and Ground Equipment
	<u>Air Force Specification Bulletins</u>
128b	Data for Aerospace Ground Equipment Analyses
507A	Aerospace Ground Equipment Functional Classification Categories
	<u>Military Handbooks</u>
*MIL-HDBK-5	Strength of Metal Aircraft Elements
MIL-HDBK-134	Trucks and Truck Tractors; Tactical (Military) Design Characteristics of
*MIL-HDBK-300	Technical Information File of Aerospace Ground Equipment
	<u>Military Standard Drawings</u>
MS-24123	Plate, Identification

Other Publications

*SWEL	Special Weapons Equipment Lists
*PMR	Programmed Material Requirements for USAF Aircraft/Missiles/ Nuclear Bombs

Parent Equipment Specifications

*Cargo Aircraft Technical Orders	
*WLI-2 Exhibit	General Design Practices, Prototype Delivery, Procurement Data, Nomenclature, and Quality Control Inspection for Development Contracts
*AFSCM-122-1	Nuclear Weapon Systems Safety Design
*AFSCM-375-1	Exhibit II Configuration Management During Definition and Acquisition Phase
*AFSCM-80-3	(HIAPSD) Handbook of Instructions for Aerospace Personnel Subsystem Designers
*AFSCM-80-6	(HIAGSED) Handbook of Instructions for Aerospace Ground Support Equipment Designers
*AFSCM-80-7	(HIAVED) Handbook of Instructions for Aerospace Vehicle Equipment Design
*AFSCM-80-9	(HIASD) Handbook of Instructions for Aerospace Systems Design
*AFM-127-100	Explosives Safety Manual
*Code of Federal Regulations	
49CFR-71-78	Insterstate Commerce Commission Regulations for the Transportation of Explosive and Other Dangerous Materials
*F/C 12630222	Design Guidelines for Nuclear Weapons System Safety
*T.O. 11N-20-12	Transportation and Storage Safety for Atomic Weapons and Components
T.O.-00-25-212	Static Electricity and Stray Current in AF Refueling Systems

APPENDIX

1. Sample project 5704 Exploratory Development Documentation.

2. Sample project 570808 Support Development Documentation.

3. Sample ESP 02113 Support Engineering Documentation.

RESEARCH AND TECHNOLOGY RESUME

1.	2. GOVT ACCESSION	3. AGENCY ACCESSION	REPORT CONTROL SYMBOL	
		DF 550021	DD-DRE(AR)636	
4. DATE OF RESUME	5. KIND OF RESUME	6. SECURITY	7. MARKING	8. RELEASE LIMITATION	9. LEVEL OF RESUME
01 03 66	F Plan (Change) 01 09 65 U	S	N/A	FO GA	E Project

10a. CURRENT NUMBER/CODE: 6.24.05.06.4 5704

10b. PRIOR NUMBER CODE: No Change

11. TITLE: (U) Nuclear Weapons Support Equipment (U) NUC WPN SUP EQ

12. SCIENTIFIC OR TECH. AREA: 001300 Aircraft, 006300 Fire Control and Bombing Systems, 010400 Missile Launching and Ground Support

13. START DATE: 07 66

14. CRIT COMPL DATE: NA

15. FUNDING AGENCY: NA

16. FUNDING METHOD: NA

17. CONTRACT/GRANT: a. DATE: b. NUMBER: NA c. TYPE: d. AMOUNT:

18. RESOURCES EST.: PRIOR FY 66; CURRENT FY 67

c. PROFESSIONAL MAN-YEARS: 6.6; 7.3

d. FUNDS (In thousands): 272; 200

19. GOV'T LAB/INSTALLATION ACTIVITY: NAME: Air Force Weapons Laboratory (WLDM) ADDRESS: Kirtland Air Force Base, New Mex 87117

REP. INDIV: TEL:

20. PERFORMING ORGANIZATION: NAME: ADDRESS: INVESTIGATORS: PRINCIPAL: ASSOCIATE: TEL: TYPE:

21. TECHNOLOGY UTILIZATION: Aerospace Equipment

22. COORDINATION: SEG, ASD, Navy BUWEPS, AFATL

23. KEYWORDS: (U) Suspension, Release, Ejection, Ground Handling and Loading Concepts for Nuclear Weapons; (U) Stored Energy Actuated Lift System (SEALS)

24. (U) Objectives: To conceive, evaluate, and refine suspension, release, ejection, ground handling, and loading concepts for nuclear weapons in existing and advanced delivery systems. Conduct studies and determine requirements for advanced weapon system support equipment and develop prototype models for evaluation. Further, to keep abreast of current and future technology and to advance the state-of-the-art in support sub-systems and equipment as necessary to satisfy changing requirements.

25. (U) FY 67 PLANS: (a) Ground Handling: (1) Engineering design work for a Stored Energy Actuated Lift System (SEALS) is scheduled for completion in early CY 1967. A contract for fabrication of a prototype SEALS device will follow. (b) Suspension and Release: (1) Upon satisfactory completion of the upward ejection tests on the supersonic sled, this concept will be extended to incorporate a retardation device as a means of increasing safe escape time. (2) A concept for forced ejection to be used in conjunction with the Universal Clip-In (MHU-79/C) will be investigated. It is desired that this ejection mechanism impart to the store a variable, vertical force, and that the mechanism have the capability of being positioned directly over the c.g. of the store. (3) Continue study to achieve a supersonic, multiple ejector rack for external aircraft stations. (4) To continue to evaluate and arrive at a final design concept to achieve a Zero Range Ordnance (Z-RO) system. Rearward ejection of a store with sufficient velocity to negate launch vehicle velocity would result in greatly improved delivery accuracy.

(U) Future Plans: To devise, evaluate, and pursue unique concepts which will enhance our nuclear delivery capability. Primary objectives are to maximize efficient weapon carriage for a given delivery vehicle, contribute to improved delivery accuracy, and minimize time, men, and equipment necessary for the ground handling and loading function.

27. COMMUNICATIONS SECURITY: 1. RELATED [X] 2. NOT RELATED	28.	29. DOD CODE: AR	30. BUDGET CODE: P-620
31. MISSION OBJECTIVE: TDO 70104		32. PARTICIPATION: None	
33. REQUESTING AGENCY: NA	34. SPECIAL EQUIPMENT: None		
35. EST. FUNDS (In thousands): (FY): FY 68-350K	36.		

DD FORM 1 AUG 64 1498 (Items 1 to 36 identical to NASA Form 1121) OVER

Sample Project 5704 Exploratory Development Documentation.

RESEARCH AND TECHNOLOGY RESUME

4. DATE OF RESUME: 13 06 66	5. KIND OF RESUME: F Plan (Change)	6. SECURITY: U	7. NA	8. RELEASE LIMITATION: FO	9. LEVEL OF RESUME: B Task Area

7. DOCUMENT CONTROL NUMBER: DF550,436 — DD-DR&E(AR)636

10a. CURRENT NUMBER/CODE: 6.44.15.03.4 5708 08

10b. PRIOR NUMBER CODE: No Change

11. TITLE: (U) Operational Support Development for Nuclear Weapon Support Equipment

12. ACTIVITIES OF VIEW: AREA 016300 Structural Engineering, 006300 Fire Control & Bombing 001300Acft

13. EVENT DATE: 07 66

14. CRIT COMPL DATE: NA

16. FUNDING AGENCY: NA

18. RESOURCES EST.	a. PROFESSIONAL MAN-YEARS	b. FUNDS (In thousands)
PRIOR FY 66	0.5	49
CURRENT FY 67	0.6	90

15. MAJOR LAB/INSTALLATION/ACTIVITY
NAME: Air Force Weapons Laboratory (WLDM)
ADDRESS: Kirtland Air Force Base, New Mex 87117
REP. INDIV: Fisk, James W., Capt, USAF
TEL: 505 247-1711 Ext 2470

19. PERFORMING ORGANIZATION
NAME:
ADDRESS: NA
INVESTIGATORS PRINCIPAL:
ASSOCIATE:
TEL: TYPE:

21. TECHNOLOGY UTILIZATION: Aerospace Equipment

22. COORDINATION: AFSWC, SEG, ASD, Navy BUWEPS, AFATL

23. KEYWORDS: (U) Suspension and release, (U) Munitions Handling, (U) Aircraft compatibility

24. (U) Objective: To develop all required support equipment for nuclear weapons to satisfy known or anticipated USAF operational needs and to develop that data necessary to integrate support equipment for nuclear weapons with existing and new aircraft. This area includes new suspension and release equipment, associated data for existing aircraft, modification of existing suspension and release equipment, associated data for new aircraft as well as new handling and loading equipment for existing aircraft along with modification of existing AGE for new aircraft.

(U) FY 67 Plans: Upon receipt of operational requirements, in-house design development, fabrication, fit checks and testing will be accomplished by AFWL and AFSWC mainly through in-house efforts. Development of data needed to integrate this support equipment with AF aircraft will be obtained through both in-house and contract efforts. An example of the data which may be required is the variation of rack output with store weight and temperature for the F-111A.

(U) Future Plans: To continue to develop required operational support equipment as new aircraft enter the aircraft inventory and as new means and methods arise for nuclear weapon loading and handling, and suspension and release.

27. COMMUNICATIONS SECURITY: [ ] CODE RELATED [X] NOT RELATED

28. OSD CODE: DT

29. BUDGET CODE: 2 (BP 61)

31. MISSION DIRECTIVE: OSR 420, OSR-439

32. PARTICIPATION:

33. REQUESTING AGENCY: NA

34. SPECIAL EQUIPMENT: None

36. EST FUNDS (In thousands): FY 68 50

DD FORM 1498 (Items 1 to 36 identical to NASA Form 1121) OVER

Sample Project 570808 Support Development Documentation.

"FORGING MILITARY SPACEPOWER"

ENGINEERING SERVICE PROJECT CARD

REPORTS CONTROL SYMBOL: AFSC - D16

1. TITLE: (U) Special Weapons Handling and Loading Systems Support

2. NUMBER: 921A-0000-02113

3. DATE PREPARED: 1 March 1966

4. EST COMPLETION DATE: Indefinite

5. APPROVAL DATE: 17 March 1965

6. SECURITY: SECRET RD

7. PROJECT OFFICE: AFWL (WLDM)

8. TELEPHONE NUMBER: 2470/3100

9. AFSC PRIORITY:

10. REQUESTING AGENCY: AFSC, TAC, SAC, ADC, USAFE, PACAF, AFLC

11. ESTIMATED COSTS

		M/Y	CURRENT F/Y	NEXT F/Y REQ
LABOR	MILITARY	0.3		
	CIVILIAN	0.0	$ 0	$ 0
OTHER			6,000	6,000
TOTAL EST COSTS			$ 6,000	$ 6,000

12. FUNDS TO BE UTILIZED

13. RESOURCES STATUS: [X] AVAILABLE [ ] REQUESTED

14. REIMBURSABLE: [X] NO [ ] YES

15. PARTICIPATING ACTIVITIES: AFWL (WLDM), (WLAS), (WLAW); AFSWC (SWT); AFINS

16. DESCRIPTION OF WORK

In-house engineering support and/or evaluation of special weapon handling and loading devices or their components as requrested or required by other AF Agencies. Technical guidance to Air Force Agencies and Weapon System Contractors on design, modification, development and test of Special Weapon Handling and Loading Equipment.

17. TEST AND EVALUATION (Attach additional pages as required)

(1) Introduction and Test Planning Factors. Test requirements will be formulated, documented and submitted to AFSWC upon receipt of a requirement from the field for AGE support. AFSWC support is required on a continuing basis for present requirements and future requirements as they arise. Tests plans will be fully documented and submitted to AFSWC (SWLPR) as the situation dictates.

(2) Test Objectives for Accomplishing the Overall Test Program. (a) Road test MHU-12/M Trailer in four store configuration. Tow at an average speed of 20 MPH, maximum of 25 MPH, for a distance of 20 miles on level paved surfaces and 20 miles on graded gravel roads. Instrumentation for acceleration loadings shall be mounted on stores. Determine if stores shift or rotate. Submit photos and test reports. (b) Road test mixed special weapon load configurations on MHU-12/M Trailer. Speeds and data required are as mentioned in (a) above. (c) Static test MHU-12/M Trailer to determine capability of trailer to meet airlift requirements with MK-61 practice units tied on.

(3) Test Schedule. (a) Static test airlift requirements of two MK-61 stores on MHU-12/M Trailer 25 Apr 66 to 30 Apr 66. (b) Road test mixed special weapon load configurations on MHU-12/M Trailer 25 Mar 66 to 15 Apr 66.

(Continued on Page 2)

18. REQUIREMENTS AND/OR JUSTIFICATION: See Page 2

19. APPROVING AUTHORITY (Project Office): R. L. ELWELL, Colonel, USAF, Chief, Plans and Programs

AUTHENTICATION (Responsible Management Organization):

AFSC FORM JUL 61 124 REPLACES ARDC FORM 124, JUL 60, WHICH IS OBSOLETE.

Sample ESP 02113 Support Engineering Documentation.

(4) Test Resources and Administration. (a) Support facilities: Static Test, Test Technician, Ground Handling and Loading Equipment, vehicle operators, photographer and associated equipment, machine shops, paint shop, model shop and wood shop. (b) AFWL will require AFSWC facilities, equipment and personnel on a continuous basis dependent upon operational needs and requirements issued by the using commands.
(5) Test and Participation Agencies. AFWL--Kirtland AFB, New Mexico--Determine the equipment to be tested, the facilities needed, and submission of test plans to correct agencies. AFSWC--Kirtland AFB, New Mexico--Conduct tests and document as outlined in test plans submitted by AFWL/WLDM. Tests will be conducted by AFSWC under AFWL project engineer observation.
(6) Project Personnel.

AGENCY	NAME	OFFICE SYMBOL AND ADDRS	PHONE
AFWL	Capt J.W. Fisk	WLDM	2470
AFSWC	G. W. Gray	SWTTT	2863
AFWL	1Lt R. M. Brown	WLDM	3100

(7) Reporting Requirements. AFSWC will submit final reports on dynamics, static and road tests to AFWL/WLDM upon completion of testing.

ITEM 18

All work on ground handling and loading equipment, although universally applicable to all aircraft in the command to which it is assigned, has had to be done under any seemingly applicable project number that was available at the time of need. There are several cases where work is done on an item of ground handling equipment which is applicable to TAC, SAC, PACAF and USAFE and many different aircraft of both the tactical fighter and strategic bomber type. This ESP will provide a control center for ground handling equipment at AFWL common to all weapons systems and operational commands.

Sample ESP 02113 Support Engineering Documentation (cont'd).

Unclassified

Security Classification

DOCUMENT CONTROL DATA - R&D

(Security classification of title, body of abstract and indexing annotation must be entered when the overall report is classified)

1. ORIGINATING ACTIVITY *(Corporate author)*
Air Force Weapons Laboratory (WLDM)
Kirtland Air Force Base, New Mexico 87117

2a. REPORT SECURITY CLASSIFICATION
Unclassified

2b. GROUP

3. REPORT TITLE
AFWL DESIGN CRITERIA FOR USAF MUNITIONS HANDLING AND LOADING EQUIPMENT

4. DESCRIPTIVE NOTES *(Type of report and inclusive dates)*
16 January 1961 to 1 March 1967

5. AUTHOR(S) *(Last name, first name, initial)*
Fisk, James W., Captain, USAF

6. REPORT DATE
April 1967

7a. TOTAL NO. OF PAGES
64

7b. NO. OF REFS

8a. CONTRACT OR GRANT NO.

b. PROJECT NO. 5704

c. Work Unit 5704-00-008

d.

9a. ORIGINATOR'S REPORT NUMBER(S)
AFWL-TR-67-19

9b. OTHER REPORT NO(S) *(Any other numbers that may be assigned this report)*

10. AVAILABILITY/LIMITATION NOTICES This document is subject to special export controls and each transmittal to foreign governments or foreign nationals may be made only with prior approval of AFWL (WLDM), Kirtland AFB, N.M. 87117. Distribution of this document is limited because of the technology discussed.

11. SUPPLEMENTARY NOTES

12. SPONSORING MILITARY ACTIVITY
AFWL (WLDM)
Kirtland AFB NM 87117

13. ABSTRACT

Air Force Weapons Laboratory general design criteria for Munitions Handling and Loading Equipment are outlined showing basic considerations, environment, functions, [illegible] conditions, certification procedures, and important references. This report is intended to be a guide for the design/project engineer, for both the USAF and industry.

DD FORM 1 JAN 64 1473

Unclassified

Security Classification

Security Classification

14. KEY WORDS	LINK A ROLE	LINK A WT	LINK B ROLE	LINK B WT	LINK C ROLE	LINK C WT
Weapons Handling and Loading Equipment						
Munitions Handling and Loading Equipment						
Bomb Lift Truck						
Bomb Lift Trailer						
Munitions Handling Trailer						
Design Criteria						

INSTRUCTIONS

1. ORIGINATING ACTIVITY: Enter the name and address of the contractor, subcontractor, grantee, Department of Defense activity or other organization *(corporate author)* issuing the report.

2a. REPORT SECURITY CLASSIFICATION: Enter the overall security classification of the report. Indicate whether "Restricted Data" is included. Marking is to be in accordance with appropriate security regulations.

2b. GROUP: Automatic downgrading is specified in DoD Directive 5200.10 and Armed Forces Industrial Manual. Enter the group number. Also, when applicable, show that optional markings have been used for Group 3 and Group 4 as authorized.

3. REPORT TITLE: Enter the complete report title in all capital letters. Titles in all cases should be unclassified. If a meaningful title cannot be selected without classification, show title classification in all capitals in parenthesis immediately following the title.

4. DESCRIPTIVE NOTES: If appropriate, enter the type of report, e.g., interim, progress, summary, annual, or final. Give the inclusive dates when a specific reporting period is covered.

5. AUTHOR(S): Enter the name(s) of author(s) as shown on or in the report. Enter last name, first name, middle initial. If military, show rank and branch of service. The name of the principal author is an absolute minimum requirement.

6. REPORT DATE: Enter the date of the report as day, month, year; or month, year. If more than one date appears on the report, use date of publication.

7a. TOTAL NUMBER OF PAGES: The total page count should follow normal pagination procedures, i.e., enter the number of pages containing information.

7b. NUMBER OF REFERENCES: Enter the total number of references cited in the report.

8a. CONTRACT OR GRANT NUMBER: If appropriate, enter the applicable number of the contract or grant under which the report was written.

8b, 8c, & 8d. PROJECT NUMBER: Enter the appropriate military department identification, such as project number, subproject number, system numbers, task number, etc.

9a. ORIGINATOR'S REPORT NUMBER(S): Enter the official report number by which the document will be identified and controlled by the originating activity. This number must be unique to this report.

9b. OTHER REPORT NUMBER(S): If the report has been assigned any other report numbers *(either by the originator or by the sponsor)*, also enter this number(s).

10. AVAILABILITY/LIMITATION NOTICES: Enter any limitations on further dissemination of the report, other than those imposed by security classification, using standard statements such as:

(1) "Qualified requesters may obtain copies of this report from DDC."

(2) "Foreign announcement and dissemination of this report by DDC is not authorized."

(3) "U. S. Government agencies may obtain copies of this report directly from DDC. Other qualified DDC users shall request through _____."

(4) "U. S. military agencies may obtain copies of this report directly from DDC. Other qualified users shall request through _____."

(5) "All distribution of this report is controlled. Qualified DDC users shall request through _____."

If the report has been furnished to the Office of Technical Services, Department of Commerce, for sale to the public, indicate this fact and enter the price, if known.

11. SUPPLEMENTARY NOTES: Use for additional explanatory notes.

12. SPONSORING MILITARY ACTIVITY: Enter the name of the departmental project office or laboratory sponsoring *(paying for)* the research and development. Include address.

13. ABSTRACT: Enter an abstract giving a brief and factual summary of the document indicative of the report, even though it may also appear elsewhere in the body of the technical report. If additional space is required, a continuation sheet shall be attached.

It is highly desirable that the abstract of classified reports be unclassified. Each paragraph of the abstract shall end with an indication of the military security classification of the information in the paragraph, represented as *(TS)*, *(S)*, *(C)*, or *(U)*.

There is no limitation on the length of the abstract. However, the suggested length is from 150 to 225 words.

14. KEY WORDS: Key words are technically meaningful terms or short phrases that characterize a report and may be used as index entries for cataloging the report. Key words must be selected so that no security classification is required. Identifiers, such as equipment model designation, trade name, military project code name, geographic location, may be used as key words but will be followed by an indication of technical context. The assignment of links, rules, and weights is optional.