UNCLASSIFIED

AD NUMBER
AD802488
LIMITATION CHANGES
TO: **Approved for public release; distribution is unlimited.**
FROM: **Distribution authorized to U.S. Gov't. agencies and their contractors; Critical Technology; JUN 1966. Other requests shall be referred to Air Force Rocket Propulsion Laboratory, Edwards, CA 93523. This document contains export-controlled technical data.**
AUTHORITY
AFRPL ltr, 20 Dec 1971

THIS PAGE IS UNCLASSIFIED

AFRPL-TR-66-130

802488

INVESTIGATION OF HYBALINE A_{14} AS A COMBUSTION INSTABILITY SUPPRESSANT IN A LO_2/RP-1 COMBUSTION SYSTEM

RICHARD R. WEISS

TECHNICAL REPORT NO. AFRPL-TR-66-130

JUNE 1966

PROJECT 3058

AIR FORCE ROCKET PROPULSION LABORATORY
RESEARCH AND TECHNOLOGY DIVISION
AIR FORCE SYSTEMS COMMAND
UNITED STATES AIR FORCE
EDWARDS, CALIFORNIA

THIS DOCUMENT IS SUBJECT TO SPECIAL EXPORT CONTROLS AND EACH TRANSMITTAL TO FOREIGN GOVERNMENTS OR FOREIGN NATIONALS MAY BE MADE ONLY WITH PRIOR APPROVAL OF AFRPL. (RPPR-STINFO), EDWARDS, CALIFORNIA 93523.

2

DISCLAIMER NOTICE

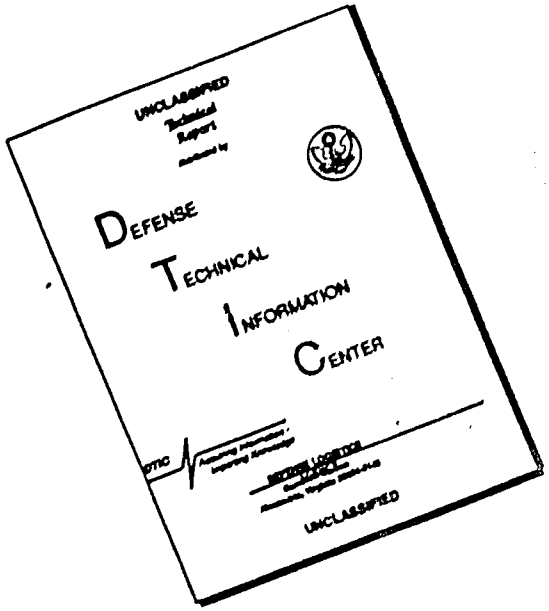

THIS DOCUMENT IS BEST QUALITY AVAILABLE. THE COPY FURNISHED TO DTIC CONTAINED A SIGNIFICANT NUMBER OF PAGES WHICH DO NOT REPRODUCE LEGIBLY.

NOTICES

When U. S. Government drawings, specifications, or other data are used for any purpose other than a definitely related Government procurement operation, the Government thereby incurs no responsibility nor any obligation whatsoever, and the fact that the Government may have formulated, furnished, or in any way supplied the said drawings, specifications, or other data, is not to be regarded by implication or otherwise, or in any manner licensing the holder or any other person or corporation, or conveying any rights or permission to manufacture, use, or sell any patented invention that may in any way be related thereto.

AFRPL-TR-66-130

INVESTIGATION OF HYBALINE A_{14} AS A COMBUSTION INSTABILITY SUPPRESSANT IN A LO_2/RP-1 COMBUSTION SYSTEM

RICHARD R. WEISS

TECHNICAL REPORT NO. AFRPL-TR-66-130

JUNE 1966

PROJECT 3058

AIR FORCE ROCKET PROPULSION LABORATORY
RESEARCH AND TECHNOLOGY DIVISION
AIR FORCE SYSTEMS COMMAND
UNITED STATES AIR FORCE
EDWARDS, CALIFORNIA

This document is subject to special export controls and each transmittal to foreign governments or foreign nationals may be made only with prior approval of AFRPL (RPPR-STINFO), Edwards, California 93523.

FOREWORD

The work described in this report was performed by personnel of the Engine Research Branch, Liquid Rocket Division, Air Force Rocket Propulsion Laboratory, as part of Project 3058. First Lieutenant Robert J. Brislin was the Project Engineer and was responsible for conducting the experimental program and reduction of the test data. Mr. Richard R. Weiss was the Program Manager.

This report has been reviewed and approved.

ELWOOD M. DOUTHETT
Colonel, USAF
Commander, Air Force Rocket Propulsion Laboratory

ABSTRACT

An experimental investigation was performed on the use of Hybaline A_{14} as a combustion instability suppressant in a LO_2/RP-1 combustion system. A pulse motor combustion stability evaluation tool was used for the test program. Tests were conducted with three different concentrations of Hybaline A_{14} in RP-1. These concentrations were, by weight, 6.6%, 10.9%, and 15.5%. Tests were also conducted using RP-1 without additive which provided baseline data for comparative evaluation. A total of eighteen tests were conducted over a prescribed mixture ratio range of 2.0 to 3.0 and at two different chamber pressure levels, 300 and 500 psia.

A pulse gun stability rating device was used to artificially perturb the combustion process. Relative stability characteristics were compared by considering the combustion system response to induce pressure disturbances, size of disturbance required for instability, damping characteristics and resultant instability modes and oscillation amplitudes.

TABLE OF CONTENTS

SECTION		Page
	FOREWORD	
	ABSTRACT	
I	INTRODUCTION	1
	Background	1
	Objectives and Approach	2
II	DESCRIPTION OF HYBALINE FUEL	3
III	EXPERIMENTAL PROCEDURE	4
	Test Apparatus	4
	Stability Rating Method	5
	Instrumentation	6
	Test Facility and Operation	7
	Fuel Preparation and Quality Control	8
IV	DATA INTERPRETATION METHODS	9
	Stability Data	9
	Performance Data	10
V	TEST RESULTS	11
	Summary	11
VI	DISCUSSION ON PERFORMANCE	14

Table of Contents (Cont'd)

SECTION		Page
VII	DISCUSSION ON STABILITY	15
	Instability Characteristics	15
	Perturbation Magnitude Required for Instability	16
	Time to Damp	18
	Damping Characteristics	18
	Influence of Chamber Pressure on Stability	19
	Influence of Mixture Ratio on Stability	20
VIII	SUMMARY AND CONCLUSION	21
	REFERENCES	23
	DISTRIBUTION LIST	
	FORM 1473	

LIST OF TABLES

NUMBER	Title	Page
1.	Physical Properties of Hybaline A_{14}	24
2.	Pulse Charge Specifications	24
3.	Test Results Summary	25
4.	Summary of Instability Results	26
5.	Time Required to Damp from Various Pulse Charge Disturbances	27
6.	Pulse Pressure Summary	28
7.	Theoretical Acoustic Mode Frequencies - 15" Diameter Pulse Motor Assembly	30

LIST OF FIGURES

FIGURE	Title	Page
1.	15" Diameter, Dished Head, Conical Pulse Motor Assembly Schematic	31
2.	Pulse Motor Assembly Mounted on Test Stand	32
3.	15" Diameter, Pulse Motor Dished Injector Head	33
4.	15" Diameter, Pulse Motor Injector Spud with Description of Like-on-Like Impinging Doublet Injector Pattern	34
5.	The Pulse Gun Stability Rating Device	35
6.	Major Components of the Pulse Gun	36
7.	Pulse Motor Assembly Instrumentation Location Schematic	37
8.	Test System Schematic	38
9.	RP-1 Plus Hybaline A_{14} Propellant Preparation	39
10.	Identification Parameters - Chamber Pressure Disturbance	40
11.	Typical Curve Fitted to Pressure Decay Data	41
12.	Theoretical C* versus Mixture Ratio, LO_2/RP-1 + A_{14}, Pc = 3000 psia	42
13.	Experimental C* versus Mixture Ratio for Various Concentrations of A_{14} Additive	43
14.	General Instability Test Summary	44
15.	Maximum Pressure Created by Disturbances	45
16.	Time to Damp Required for Various A_{14} Concentrations	46
17.	Damping Rate Comparison for Various Concentrations of A_{14} Additive; 10 Grain Pulse Charge - Mixture Ratio = 2.7	47

List of Figures (Cont'd)

FIGURE	Title	Page
18.	Damping Rate Comparison for Various Concentrations of A_{14} Additive; 10 Grain Pulse Charge - Mixture Ratio = 3.0	48
19.	Damping Rate Comparison for Various Concentrations of A_{14} Additive; 15 Grain Pulse Charge - Mixture Ratio = 2.7	49
20.	Damping Rate Comparison for Various Concentrations of A_{14} Additive; 15 Grain Pulse Charge - Mixture Ratio = 3.0	50
21.	Damping Rate Comparison for Various Concentrations of A_{14} Additive; 20 Grain Pulse Charge - Mixture Ratio = 2.7	51
22.	Damping Rate Comparison for Various Concentrations of A_{14} Additive; 20 Grain Pulse Charge - Mixture Ratio = 3.0	52
23.	Influence of Chamber Pressure on Instability Damping Characteristics with 15.5% A_{14} Concentration	53
24.	Effect of Chamber Pressure on Instability Damping Rate with 15.5% A_{14} Concentration	54

SECTION I

INTRODUCTION

Background

Combustion instability problems have periodically plagued liquid propellant rocket engine development programs. Such programs have included the now-operational Atlas engines as well as the more recent large thrust F-1 engine; both of which use liquid oxygen/RP-1 propellants. When instability occurs, much time and money are spent to obtain adequate solutions, or "fixes", that will successfully stabilize the combustion. Oftentimes, solutions are sought by introducing chemical additives to one of the propellants in hope that it will serve to decouple the instability from its sustaining mechanism. This report describes an experimental effort conducted by the Air Force Rocket Propulsion Laboratory to evaluate the potential of Hybaline A_{14} (2-ethylhexylamine aluminum borohydride) as an instability suppressing additive to RP-1 when used with the LO_2 oxidizer.

A preliminary experimental study of Hybaline A_{14} as an instability suppressant in liquid oxygen - RP-1 systems was conducted by the Temple University Research Institute (1). Test results indicated that low frequency thrust oscillations were significantly reduced when Hybaline A_{14} was added to the RP-1 in weight concentrations of 7% and 10%. This was taken to mean that stability characteristics improved when the Hybaline A_{14} was added. Tests were also performed with a 4% concentration, but only marginal stability improvement over neat RP-1 was noted.

While these preliminary results proved encouraging, it was evident that more conclusive testing with Hybaline A_{14} would be required to establish its feasibility for use in a large thrust engine system. Temple's

testing was performed at low chamber pressures (100 psia) in a small thrust (10-lb) engine. Futhermore, the instrumentation used was not of sufficiently high frequency response to adequately study instability phenomena.

The results of an earlier combustion stability investigation conducted by the AFRPL with N_2O_4/Hybaline A_5 propellants gave further credence to the attractiveness of using Hybaline as an instability suppressant additive (Ref. 3). Hybaline A_{14} is similar to the A_5 fuel with the exception that the associated ligand for A_{14} has been changed to permit better compatibility with RP-1. In the program using the A_5 fuel, attempts were made to induce combustion instability in a total of thirteen tests over a wide range of chamber pressures. No instability resulted in any of these tests.

Objectives and Approach

This Technical Report describes the work conducted and the experimental results obtained with a Hybaline A_{14} additive to RP-1 as a part of the Pulse Motor Combustion Instability Investigation, Project 305802022.

The objective of the program was:

(1) Evaluate possible combustion stability improvements resulting from the addition of Hybaline A_{14} to RP-1 for use in large thrust, LO_2/RP-1 rocket engines.

Pulse motor tests were conducted with three different concentrations of Hybaline A_{14} in RP-1. These concentrations were, by weight, 6.6%, 10.9% and 15.5%. Liquid oxygen was used as the oxidizer for all tests. Tests were conducted over a prescribed mixture ratio range at approximately 300 psia chamber pressure for each concentration. Additionally, a few tests were also conducted at 500 psia chamber pressure using one Hybaline A_{14} concentration. A series of tests was initially conducted

using "neat" RP-1 (i. e., RP-1 without the Hybaline additive) which provided a baseline for evaluating the effect of Hybaline A_{14} addition on stability and performance. During each test, the combustion system was artificially perturbed by the use of the pulse gun stability rating method. Data was acquired on the magnitude of induced pressure perturbations and combustion system response characteristics which permitted relative stability comparisons to be made between each RP-1 + A_{14} combination, as well as with the neat RP-1 fuel.

SECTION II

DESCRIPTION OF HYBALINE FUEL

The term Hybaline is a Union Carbide Corporation trade name which designates a family of high energy liquid fuels which were investigated and developed under Contract AF 04(611)-8164 for the AFRPL (2). Chemically, the Hybalines are coordination compounds of light metal hydrides or metal borohydrides, complexed with organic Lewis bases such as amines or ethers. Hybaline A fuels comprise amine adducts of aluminum borohydride while Hybaline B fuels are amine adducts of beryllium borohydride. The Hybalines may be viewed as a densified form of hydrogen bounded by energetic light metal atoms. The fuel is hypergolic with most oxidizer propellants. Additionally, it is hypergolic with water and tends to be reactive with moist air.

Hybaline A_{14} was developed as an RP-1 soluble hybaline to improve the combustion characteristics of RP-1. The chemical name for Hybaline A_{14} is 2-ethylhexylamine aluminum borohydride. Properties of Hybaline A_{14} are provided in Table 1.

SECTION III

EXPERIMENTAL PROCEDURE

Test Apparatus

Pulse Motor - All testing was performed with a 15-inch internal diameter pulse motor. The pulse motor is a combustion stability evaluation tool used to determine the stability characteristics of selected injector patterns and propellant combinations. It is designed primarily for investigating the tangential mode of high frequency combustion instability. The pulse motor was initially developed by Aerojet-General Corp. under Air Force sponsorship. Its purpose and use has been previously described (4, 5).

The pulse motor assembly used in the test program consisted of a dished injector head, a conical combustion chamber and a nozzle throat unit. In addition, a circumferential transparent plexiglass window measuring 15" I. D. - 16.25" O. D. - 0.37" wide was fitted between the injector head and the combustion chamber to permit the combustion process to be photographed by a conventional, high speed streak film technique. When assembled, an approximately 1/8" wide slit was available to the camera field of view. Major components of the pulse motor are shown in Figure 1.

A range of operating conditions can be evaluated in the pulse motor by regulating the propellant flow rate, mixture ratio and chamber pressure. Chamber pressure can be varied by changing either the mass flow rate or the nozzle throat diameter. The pulse motor assembly is shown installed in the associated test stand position in Figure 2.

A representative portion of a desired full-face injector pattern is placed into injector spuds located around the periphery of the combustion

chamber. This permits stability tests to be conducted at reduced thrust levels while using large diameter, combustion chamber cavities, similar to those of full-scale, liquid propellant rocket engines. Approximately 10-20% of the orifices of a full-scale injector pattern are used for the pulse motor injector spuds.

Injector - The injector head is machined from a solid block of stainless steel, such that the internal surface simulates the contour of a typical full-scale injector. Propellant passages, drilled from a manifold in the center of the head to the eight injector-spud mounting holes at the periphery of the concave surface, allows propellant to flow from the dome-shaped manifold to the injector spuds. Mounting bosses, installed circumferentially around 180 degrees of the injector head, receive the five pulse guns used to introduce perturbations into the pulse motor. Figure 3 shows the details of the pulse motor injector head with the injector spuds installed. The damage shown is typical of that incurred as a result of burn-through of the plexiglass circumferential window when chamber pressure exceeded 600 psia. The burn-through problem has been alleviated by a design change from the serrated seal arrangement shown to an "O-ring" seal. The view in Figure 3 was taken during an earlier test program and burn-through was not encountered during Hybaline A_{14} testing.

One injector pattern was used for all tests conducted with the RP-1 and RP-1 plus A_{14} fuels. This pattern is a like-on-like, self impinging doublet type. The pattern was drilled into injector strips that were subsequently brazed into position in the pulse motor injector spuds. Figure 4 shows the injector spud and describes the pattern configuration. Note that the injector spud face is contoured to the same sperical radius as the pulse motor dished injector head that was used.

Stability Rating Method

The pulse gun technique essentially consists of firing a gun-like device within which a calibrated, fast burning powder charge is burned behind a

diaphragm having a specified burst pressure rating. When the cavity pressure exceeds the diaphragm rating, the diaphragm bursts, allowing a shock-type pressure disturbance to be directed into the combustion chamber. The pulse gun is located at the periphery of the chamber wall and can be oriented in almost any direction. Five different pulse charge sizes were used for the test program. These charges consisted of 10, 15, 20, 40 and 80 grains of Hercules Bullseye pistol powder or equivalent. Powder weights used were accurate to within ± 0.05 grains. A pulse gun is shown in Figure 5; its major components are depicted in Figure 6. Table 2 provides information concerning the pulse charges used in the test program. A complete description of the pulse gun, its use and operation, is provided in Reference 6.

Operationally, the pulse gun method permits the use of several guns during each test. As can be seen in Figures 1 and 2, five (5) pulse guns are mounted around the periphery of the pulse motor combustion chamber, immediately downstream of the injector face. Each gun contains a pulse charge of a different magnitude. The pulse guns are fired electrically in sequence, introducing successive pressure perturbations, each of increasing intensity, into the combustion chamber during steady-state operation. A period of approximately 150 milliseconds is allowed between successive pulse discharges.

Instrumentation

During the test program, normal test parameters such as propellant flow rates, propellant temperatures, run tank pressures, injection pressures, valve travel and chamber pressure were measured using conventional techniques and were continuously recorded for each test. Thrust measurement capability was not available on the test facility.

High frequency, chamber pressure oscillations were measured using two, water-cooled, Photocon Model 352A transducers located in the same axial plane, approximately 3.11 inches aft of the injector flange. These

transducers were positioned 90° apart. Figure 7 schematically displays the location of the instruments. Included in the figure is the location of the pulse gun discharge ports as well. A modified 35 mm Fairchild (Model FHSC-001) streak film camera was used to record the luminosity traces of the instability waves. The camera was positioned to view the combustion process over a portion of the thrust chamber diameter through the plexiglass circumferential thrust chamber window.

Test Facility and Operation

A schematic drawing of the test system is provided in Figure 8. Tankage and plumbing is all of stainless steel construction. The thrust chamber propellant valves used to control the flow of propellant to the injector assembly are two-inch diameter, Y-body, Security valves. These valves are operated by an electrohydraulic actuator and are capable of complete closure from fully open positions within 100 milliseconds. Cavitating venturies were utilized in the fuel and oxidizer feed systems to provide flow control and isolate the upstream feed system from pressure disturbances occurring in the combustion chamber.

Both fuel and oxidizer run tanks were pressurized with gaseous helium. Gaseous nitrogen was used for feed system propellant purge purposes. As part of the injector purge system, check valves were used to provide a net positive pressure (in relation to the chamber pressure) in the injector flow passages during engine start and shutdown transient, as well as to evacuate all residual propellants within the engine immediately after shutdown.

All tests were conducted with an approximate 100 to 200 millisecond oxidizer lead. Engine ignition was initiated by use of conventional pyrotechnic igniters. The igniters were mounted at the end of a long stick that was installed through the nozzle throat assembly. When ignition occurred, the resultant increased pressure and exhaust gas flow ejected the igniter stick from the motor.

To protect the test hardware from damage during unstable combustion, the output of a high frequency response chamber pressure transducer was monitored by an electronic shutdown device. This device automatically terminates the test when sustained combustion instability occurs. Termination is initiated when peak-to-peak chamber pressure oscillations exceeding 20% of the steady state chamber pressure level and having a frequency greater than 600 cps persist for more than 40 milliseconds.

Prior to each test, the liquid oxygen feed system, including the injector head, was thoroughly chilled. Experience in the early runs revealed that chilling the large mass of injector head metal was required to achieve rapid chamber pressure pickup.

Fuel Preparation and Quality Control

Solutions of Hybaline A_{14} in RP-1 were prepared according to the procedures outlined in Figure 9. Great care was taken to insure that air and water did not enter the mixing system since Hybaline A_{14} is incompatible with both. For this study, a special anhydrous RP-1 without dye was used for all testing. It was feared that the Hybaline A_{14} would react with the water and dye in standard military specification RP-1 to form undesirable precipitates. However, during the course of the program, a laboratory test on the compatibility of Hybaline A_{14} with Military Specification RP-1 was performed. They were found to be compatible. No precipitates formed when the two chemicals were mixed.

Tests to determine actual concentrations of the Hybaline A_{14} in RP-1 were performed each time a propellant batch was prepared. In addition, samples were frequently taken from the fuel run tank and tested to insure that no precipitates were being formed and that Hybaline A_{14} concentrations remained invariant. Concentration analysis was performed with the use of a DK-2 spectrophotometer. Concentrations are considered accurate within ± .5%. During the test program, no problems with variations in concentration or formation of precipitates were encountered.

SECTION IV

DATA INTERPRETATION METHODS

Stability Data

High frequency response pressure data was recorded on magnetic tape at 60 in/sec. This data was played back in unfiltered form onto Miller oscillograms by running the tape at 1/8 of the recording speed and running the oscillograph at 40 in/sec. This resulted in an oscillograph record with an equivalent data speed of 320 in/sec and a frequency response flat to 9600 cps. The combination oscillation frequency was then determined by counting the cycles during a given time interval. Mode identification and phasing were also obtained from the high-speed playback.

Parameters used to evaluate the data for relative stability characteristics included the size of the pulse charge required for instability, the peak pressure disturbance created by the pulse, the damping characteristics of those disturbances not resulting in instability and the resultant instability modes and amplitudes. Figure 10 identifies several of the parameters used to characterize a chamber pressure disturbance. The initial pressure peak created by the perturbation is designated ΔP pulse, while the maximum overpressure resulting from the combustion system amplification is termed ΔP_{max}. The larger the disturbance absorbed by the combustion system without resulting in instability, the more stable the system.

The damping characteristics of the disturbed combustion system were evaluated using two approaches; (1) the time to damp from a given disturbance, and (2) the rate of pressure oscillation decay during damping. The time required to damp a given disturbance is defined to be that time from initial pressure rise to the point where the pressure oscillations are reduced to ± 5% of the steady-state chamber pressure.

Peak-to-peak oscillating pressure values were taken from the pressure traces and recorded as a function of time from disturbance initiation. The data was then fitted to an equation of the form: $P = P_o e^{-xt}$. By taking the natural logarithm $P_o e^{-xt}$ of both sides of this equation, a polynominal of the first degree was obtained to which the data was fitted by the method of least squares. Subsequently the coefficients for the general equation were then found. In this case, the coefficient, Po, corresponds to the maximum overpressure created by the pulse and the coefficient, x, corresponds to the damping rate.

Figure 11 provides an example of a typical curve fitted to experimental pressure decay data. Data scatter is shown to represent as much as a 5 millisec period at the same pressure oscillation value. However, this occurred toward the end of the damping period and therefore did not have a heavy weighing influence on the curve fit. Considerable scatter was obtained during the first four millisec after pulse initiation which did seriously distort the data fit. For this reason, the curve fit discarded all data points in that time period. As seen in Figure 11, a good fit of the data was obtained using this procedure.

Performance Data

Combustion efficiency (C*) performance data was computed to evaluate the actual percent of theoretical performance achieved. Actual C* performance was determined by the well known method using the equation: $C^* = \frac{Pc\ A_t\ g}{W_t}$

Chamber pressure was measured by a low frequency response, strain gauge pressure transducer located approximately 4.55 inches from the injector-thrust chamber flange (Figure 7), and was not corrected to nozzle stagnation conditions. Therefore, while the absolute value of C* performance may be questionable, a comparative evaluation of the differences between propellants and injectors can be made.

Thrust was not measured during the test program, hence, Isp performance was not obtained.

SECTION V

TEST RESULTS

Summary

A total of eighteen tests were conducted tc evaluate the LO_2/RP-1 + A_{14} propellants. Stability evaluations were made with LO_2/RP-1 having no additive to provide a baseline for comparison with those tests containing the Hybaline A_{14}. In this manner, the extent of stability enhancement, if any, could be more easily assessed. Percent A_{14} concentrations (by weight) of 6.6, 10.9 and 15.5 were experimentally evaluated. Tests were conducted within three areas of mixture ratio; 2.0-2.2, 2.5-2.7, 2.9-3.0. All tests but two were conducted at chamber pressures varying from approximately 200 to 300 psia. The remaining two tests were conducted at approximately 500 psi chamber pressure to evaluate possible stability enhancement, or changes, exhibited by a second pressure level.

Table 3 provides a summary of the tests results. Due to instrumentation difficulties experienced throughout the test program with both the oxidizer and fuel injector pressure parameters, these data were considered unreliable and are not presented.

Tabulated summaries of the instability results are provided in Table 4. It can be seen from the Table that ten of the eighteen tests resulted with combustion instability. Tables 5 and 6 present specific test results including the time to damp from various pulse disturbances, peak pulse pressure and maximum pulse pressure.

A brief resume concerning the test series conducted for each A_{14} concentration level is provided below.

LO_2/RP-1 Testing - Six tests were conducted with LO_2/RP-1 propellants containing no A_{14} additive. Tests 1B-3, 2B-3 and 3B-3 were the primary data tests conducted. All three of these tests resulted in combustion instability, requiring a 40 grain pulse to initiate two instabilities and a 80 grain pulse to initiate the third. Chamber pressure for the three tests varied from 251 psia to 284 psia. One test was conducted in each of the three mixture ratio ranges of interest. Peak-to-peak amplitudes of oscillation corresponded to about 35-60% of the steady-state chamber pressure value.

The remaining three tests conducted with neat RP-1 fuel were of a special nature and, as such, produced little data to contribute to the evaluation of the A_{14} additive. These tests were conducted with the pulse guns placed in the same locations as for the previous tests, but the guns were fired in reverse order; that is, 80, 40, 20, etc. rather than 10, 15, 20, etc. The purpose for these tests was to assure that the system would become unstable when disturbed by the larger pulse charge rather than display some peculiar characteristic of being more sensitive to a smaller charge. This distrust of the rating method used is created to a large extent by the unknowns associated with all rating techniques. Peoples (7) points out that such an occurrence could happen and reasons that it could be the velocity component of the driver gas associated with the pulse charge disturbance rather than the associated pressure component that excites the potential modes of combustion instability. However, this has not been demonstrated experimentally.

Combustion instability resulted during all three tests. Two tests (5B-3 and 6B-3) were driven unstable with the first pulse (80 grain size) fired and one test (4B-3) went unstable on the second pulse (40 grain size). Chamber pressures for these tests were somewhat lower than the previous tests with neat RP-1 fuel. They ranged from 177 psia to 237 psia. However, mixture ratios were approximately the same. Characteristics of the instabilities were the same as those obtained from the previous tests. Peak-to-peak amplitudes of oscillation ranged from 30 psi to 145 psi, which corresponds to about 12 to 75% of the steady-state chamber pressure.

Examination of the high speed playback pressure records revealed that both the pulse pressure and maximum pressure created by the 40-grain pulse of test 4B-3 were greater than the disturbance created by the 80-grain pulse. Furthermore, the pressure levels created by the 80-grain pulse in test 4B-3 were below those which initiated instability in the other tests. Therefore, it is believed that the disturbance created by the 80-grain pulse charge for test 4B-3 was below the effectiveness normally obtained with 80-grain pulse charges. It is also possible, but unsubstantiated, that inadvertently, 40-grain pulse charges were loaded into both guns fired.

LO_2/93.4% RP-1 plus 6.6% A_{14} - Three tests were conducted with the RP-1 containing 6.6% A_{14} additive. All three tests resulted in instability with each being induced by a 40-grain pulse charge. Chamber pressure and mixture ratios were similar to those tested during the primary neat RP-1 test series. Peak-to-peak amplitudes of oscillation during instability ranged from 45-145 psi, which corresponds to about 15 to 55% of the steady-state chamber pressure.

LO_2/89.1% RP-1 plus 10.9% A_{14} - Five tests were conducted with 10.9% A_{14} fuel additive; however, two of the tests were terminated prematurely and therefore produced little instability data. Of the remaining three tests, only one resulted in instability. Test 1B-3A2 went unstable when disturbed with an 80-grain pulse. The other tests assimilated all five pulses without any resultant instability. These tests did, however, establish a tendency to oscillate at 2000 cps (4B-3A2) and 1700 cps (5B-3A2) during their damping period. Peak-to-peak amplitude of oscillation for the unstable run was similar to that experienced at different concentrations in other tests. The test value was 100-140 psi, which corresponds to approximately 34-48% of the steady-state chamber pressure.

LO_2/84.5% RP-1 plus 15.5% A_{14} - Four tests were conducted with 15.5% A_{14} fuel additive. Two chamber pressures were examined; 300 psia and 500 psia. One test, 4B-3A3, incurred a pulse gun firing circuit

malfunction and therefore only had the 10 and 15 grain pulse charges fired during the run. Additionally, the 80 grain pulse charge failed to fire during test 3B-3A3. Both of these tests were conducted at the 300 psia chamber pressure level and therefore limits the extent of the instability data at this chamber pressure with 15.5% concentration. No cases of instability were encountered during testing with the 15.5% A_{14} concentration at 500 psia chamber pressure.

SECTION VI

DISCUSSION ON PERFORMANCE

Combustion efficiency (C*) performance was determined for each test firing. Chamber pressure was measured at a position 4.55 inches from the injector-thrust chamber flange. Chamber pressure values used in the calculations were not corrected to the stagnation pressure. Therefore, while absolute values of C* are not reported, comparative evaluations can be made between the various RP-1 formulations tested.

Theoretical characteristic exhaust velocity (C*) data for LO_2/RP-1 plus A_{14} propellants at 300 psia chamber pressure is displayed in Figure 12. Values are shown only for 7% and 10% A_{14}. It is seen that increases in theoretical performance are very small between the neat RP-1 and RP-1 with the addition of Hybaline A_{14}. A maximum increase of only 30 ft/sec in C* performance is available at the optimum mixture ratio between neat RP-1 and the higher 10% concentration of A_{14}.

C* data obtained from the experimental test firings conducted at approximately 300 psia Pc is presented in Figure 13. The data has been corrected to correspond to those values that would have been obtained had the chamber pressure been exactly 300 psia. This was done by simple interpolation techniques and provides a common baseline for comparison of the experimental results. Because of the low resultant chamber pressure from three tests with neat RP-1 (4B-3 through 6B-3), data from those tests were omitted from the evaluation rather than attempt to make gross

corrections for same. Because of the very small number of test runs at each concentration, only a few data points are available to help define performance trends. For that reason, the data points are connected by straight lines and no attempt was made to establish a fitted curve.

The test results reveal higher values of performance were obtained for the 10.9% concentration of Hybaline A_{14}. However, it is noted that the majority of the tests were conducted at mixture ratios higher than the value corresponding to the optimum performance point. As the optimum mixture ratio (2.0-2.2) is approached, the difference between C* achieved with 10.9% A_{14} and with neat RP-1 gets smaller. The two curves even appear to be intersecting and crossing each other at an extrapolated mixture ratio of 2.0.

Comparing the various concentrations of additive, it is seen that the 10.9% concentration delivered the highest C* performance, 6.6% the next highest, and 15.5% the lowest. It is noted that although the 15.5% is represented by only two data points, the trend of the curve is similar to the other concentrations at the higher mixture ratio.

SECTION VII

DISCUSSION ON STABILITY

To investigate the stability characteristics associated with the various Hybaline concentrations in RP-1 under different operating conditions, a mixture ratio versus chamber pressure survey was conducted. General test results are provided in Table 3. Tabulated summaries of the instability results are also provided in Tables 4, 5 and 6.

Instability Characteristics

Table 7 presents the calculated acoustic mode frequencies for the pulse motor using the LO_2/RP-1 propellant combinations. These frequencies are not appreciably different for the other RP-1/Hybaline blends tested. All resultant instabilities were classified as the spinning first tangential mode

at a frequency of 1900-2000 cps. This corresponds closely to that which is predicted analytically from the acoustic wave equation. In all cases of instability, the direction of spin was the same and was in that direction enhanced by the tangentially oriented pulse gun. This corresponds to a counter-clockwise rotation (looking at the injector face from the nozzle end) where P_{D2} leads P_{D1} by 90 degrees (Figure 7).

No appreciable differences were observed in the peak-to-peak amplitudes of resultant instability between the various Hybaline A_{14} concentrations evaluated. The values of steady-state oscillation amplitudes averaged between 80 to 140 psi.

Perturbation Magnitude Required for Instability

A general summary of the instability results is provided in Figure 14. The various propellants tested in the experimental program are displayed together and the size of pulse charge required to drive each system unstable is given along the ordinate. The number of tests associated with each pulse charge size are displayed in parentheses within each bar. The three tests conducted with the pulse guns fired in reverse order are not included for obvious reasons.

It can be seen that some instability resulted when concentrations of 6.6% and 10.9% of A_{14} were added to the RP-1. Testing with the neat RP-1 resulted with two of three tests driven unstable with the 40 grain charge and the third with an 80 grain charge. The fact that a variety of pulse charge sizes were required to induce combustion instability is not surprising since variations in mixture ratio and chamber pressure are known to influence combustion stability characteristics. With 10.9% concentration Hybaline A_{14} added to the RP-1, instability resulted in only one of three tests, requiring an 80 grain charge to be induced.

No instabilities were observed during tests with 15.5% concentration of A_{14} additive. However, since the 300 psia chamber pressure tests were hampered by equipment malfunctions, no stability limits could be determined as all the pulse guns could not be fired. At 500 psia chamber

pressure conditions, all the pulse guns fired during tests with the 15.5% solution and no instabilities occurred.

No appreciable enhancement in stability was apparent with the addition of 6.6% A_{14}. All three instabilities at this concentration resulted from 40 grain pulse charges.

Figure 15 displays the maximum overpressure data obtained during the test program for the various pulse charges used to evaluate the different mixtures of RP-1 plus A_{14} fuel. The observed scatter of resulting pressure magnitudes from a given size pulse charge or poor reproducibility in overpressure, probably results from the inability to properly decouple the created disturbance from the combustion process. From the data it is observed that the disturbances created during pulse tests of both the neat RP-1 and the 6.6% A_{14} concentration resulted in approximately the same level of pressure intensity. The largest disturbances were created during tests with the 15.5% A_{14} concentration whereas, the lowest disturbance levels were obtained during tests with the 10.9% A_{14}. Since both the 15.5% and 10.9% concentrations were stable in only one test, it is not known what significance, if any, can be attached to these results.

The results of the maximum overpressure data are inconclusive. The six instabilities obtained with neat RP-1 resulted from disturbances of 500 psi or greater. However, there were four other pulsed disturbances with RP-1 which exceeded 500 psi without resultant instability. Therefore, a threshold value of pressure disturbance required for instability could not be obtained. Furthermore, there were insufficient instabilities with the mixtures of RP-1 plus A_{14} to permit a comparison of the disturbance magnitudes required for instability among the various fuel blends evaluated. As can be seen from Figure 15, the 6.6% A_{14} concentration tests resulted in instability with disturbances of 600 psi or greater, whereas, disturbances greater than that value were withstood by both the 10.9% and 15.5% A_{14} concentrations.

It is interesting to note that very little differences were obtained in the disturbances created by the 20, 40 and 80-grain pulse charges. The reasons for this are open to speculation at this time and not at all fully understood.

Time to Damp

Table 5 presents a summary of the time to damp data obtained during the experimental test firings. The data is presented in tabular form for each pulse charge fired during each test. Two values of damp time are given; one for each of the two high frequency response pressure transducers used during each test.

An average damp time is obtained by simply taking the arithmetic average of the two values obtained for each pulse within each test. Figure 16 summarizes this data for all tests conducted at the 200-300 psia chamber pressure level. Since many of the tests resulted in instability with pulse charges of 40 grains or greater, only the data for the 10, 15 and 20 grain powder charges are presented.

The results demonstrate a definite trend toward reduced damp times as the concentration of A_{14} becomes greater. The upper line of the band formed by the data obtained for all tests represents the maximum average time required to damp the pulse induced disturbances for the various additive concentrations tested; the lower line of the band represents the minimum average damp time required. The trend appears to indicate that the 10.9% A_{14} concentration is more "optimum" for stability than either the 6.6% or 15.5%. However, looking at the data scatter obtained during the tests, this conclusion cannot be strongly substantiated. The data definitely shows that the use of the A_{14} additive provides some stabilization over the use of neat RP-1. It is also seen that there appears to be a minimum average damp time of approximately 15-17 milliseconds that is essentially invariant over the range of A_{14} concentrations tested.

Damping Characteristics

Evaluations were made of the damping characteristics associated with the pulse induced disturbances from tests with the neat RP-1 and Hybaline A_{14} concentrations. These evaluations primarily involved the rate of pressure oscillation decay during damping. Decay rate data is interpreted as an indicator of a combustion systems ability to assimilate

a pressure disturbance and return to its steady-state operating condition; the faster the decay rate, the more resistant, or stable, the combustion system.

The experimental results compare the damping characteristics of the various A_{14} concentrations with neat RP-1 and each other and are displayed in Figures 17 through 22 for 10, 15 and 20-grain pulse disturbances. The data is presented for two of the three mixture ratios tested; 2.7 and 3.0. However, as discussed later, mixture ratio did not appear to influence the stability results. Included on the figures along with the A_{14} concentration is the particular test number for which the data is presented as well as the coefficients that satisfy the equation: $p = P_o e^{-xt}$.

Certain trends can be observed from the experimental results. Comparing the damping rate for the various A_{14} concentrations evaluated, it is seen that in almost every case the results for the 15.5% concentration are approximately the same as those for neat RP-1. These damping rates are somewhat lower, indicating a lower stability rating, than those obtained for the 6.6% and 10.9% concentrations. These results are most strongly evidenced from Figures 18 and 22. As can be especially observed in Figures 20 and 22, the results obtained for the 6.6% and 10.9% concentrations are similar. The conclusion that tends to be established by the bulk of the experimental results is that maximum damping appears to be obtained within the A_{14} concentration range of 6.6-10.9%.

In all cases of damping from pulse induced disturbances, the combustion system tended to establish oscillation frequencies corresponding to the first tangential acoustic mode of high frequency instability. This is the same mode that was obtained when sustained instability resulted.

Influence of Chamber Pressure on Stability

To evaluate the influence of chamber pressure on the stability characteristics of RP-1 containing the A_{14} additive, two tests were conducted at an elevated chamber pressure level of approximately 500 psia. Both tests were conducted with a 15.5% concentration of A_{14}. Actual chamber

pressures obtained during the tests were 493 psia (1B-3A3) and 479 psia (2B-3A3). Figure 23 compares the average damp time required to damp disturbances created by 10, 15, 20 and 40-grain pulses at 500 psia chamber pressure with those required for test 3B-3A3 at 300 psia.

The test results indicate that an approximate 75% enhancement is obtained in stability at the higher chamber pressure level. Note that comparisons are made for tests conducted at vastly different mixture ratios; 1.53 and 2.135 for the 500 Pc tests and 2.96 for the 300 Pc test. However, the two test points at the 500 psia levels reflect good reproducibility in damp time and therefore tends to discount any strong influence of mixture ratio on the resultant stability.

The stabilizing influence obtained at higher chamber pressures is substantiated by the damping rate data obtained for the 20-grain pulse disturbance initiated in the same three tests referenced above. Figure 24 displays these experimental results and it is seen that the damping rate increased as chamber pressure increased.

Since tests were not conducted at the higher chamber pressure level with either neat RP-1 or other A_{14} concentrations, comparisons as to the relative stability among the various fuel mixtures could not be made.

Influence of Mixture Ratio on Stability

No pronounced effect on stability by mixture ratio was evident by the experimental results. Mixture ratio was varied during the test program over a range of values from approximately 1.53 to 3.0. Examination of the pressure disturbance magnitude, time to damp and decay rate data revealed no correlation with mixture ratio. In fact, as mentioned earlier, the two test points at 500 psia chamber pressure, obtained at two different mixture ratios (1.53 and 2.13) demonstrate excellent reproducibility in all three parameters.

SECTION VIII

SUMMARY AND CONCLUSION

From the analysis of the experimental data, it appears that the optimum concentration of Hybaline A_{14} additive for the LO_2/RP-1 propellant combination is in the vicinity of 10.9%. This is substantiated by both the performance and the combustion stability results. Although there are some contradictory results, the bulk of the data indicates that increased stability is obtained as the concentration of additive is increased to 10.9%. As the concentration was increased from 10.9% to the 15.5% level, both the time to damp and decay rate data indicate a degradation in combustion stability. In fact, the decay rate data tends to indicate that 15.5% A_{14} in RP-1 is no better than neat RP-1. This, however, is not substantiated by the other data.

With regard to operating conditions, it appears that mixture ratio does not have a large influence on the combustion stability characteristics of the LO_2/RP-1 plus A_{14} propellant combination. As would be suspected, however, mixture ratio does influence the obtainable C* performance with the highest performance obtained at a mixture ratio of 2.7. However, it is recognized that much more data is required over a better defined range of mixture ratio before such a conclusion is acceptable.

Limited experimental data indicates that increased stability could be obtained at increased chamber pressure levels. Increasing chamber pressure from 300 to 500 psia during the test program resulted in an approximate 75% enhancement in stability characteristics. This observation would need to be more thoroughly investigated to substantiate it for engine system application.

It is concluded that even though some stability enhancement appears promising with the addition of Hybaline A_{14} to RP-1 for LO_2/RP-1 applications, the gains do not appear to be major. Therefore, the use of the A_{14} additive depends upon the extent of stability required in the system application weighed against any problems that might be created by

incorporation of the additive as part of the propellant system. In the case of Hybaline A_{14}, problems could be created in fuel handling because of the apparent incompatibility of the Hybaline with water.

REFERENCES

1. Murphy, W. J. and Stokes, C. S., "Summary Report on the Evaluation of Hybaline A_{14} Additive Type Fuels with Liquid Oxygen", The Research Institute of Temple University, 4 March 1963.

2. "Research and Development of Metal Hydride Organic Nitrogen Complexes", AFRPL-TR-65-91, Union Carbide Corporation Final Report, AF 04(611) 8164, 1 Nov 64. AD 363729

3. Haberman, E. G. and Illies, K. F., "An Experimental Evaluation of Hybaline A_5 Fuel", Bulletin of the 5th Liquid Propulsion Symposium (Confidential), pp 339-386, 13-15 Nov 1963, Tampa, Florida.

4. Gray, P. D. and Krieg, H. C., "Pulse-Motor Evaluation of Injector-Pattern Combustion Stability with Storable Propellants", Aerojet-General Corp. Special Report No. 1664 (Confidential), AF 33(616)-5220, 29 July 1960.

5. Technical Manual, Operation and Service, Pulse Motor Assembly, Aerojet-General Corp. Publication No. HT-535501, AF 04(611)-7416), November 1961.

6. Technical Manual, Operation and Service, Shock Wave Generator, Model V, Aerojet-General Corp. Publication No. HT-653201, November 1960.

7. Peoples, R. G. and Baker, P. D., "Stability Rating Techniques", WSS/CI Paper No. 64-11, Western States Section, The Combustion Institute, 1964 Spring Meeting, Stanford University, Palo Alto, California, April 1964.

TABLE 1. PHYSICAL PROPERTIES OF HYBALINE A_{14}

Name	2-Ethylhexylamine Aluminum Borohydride
Structural Formula	$CH_3CH_2CH_2CH_2C_{2_1}H_5CHCH_2NH_2{:}Al(BH_4)_3$
Empirical Formula	$C_8H_{31}NAlB_3$
Molecular Weight	200.78
Density, gm/ml 20°C	0.780
Vapor Pressure, mm Hg 21.6°C	22.0
Boiling Point, °C	>300 (extrapolated)
Viscosity, cp 20°C	30.0
Freezing Point, °C	-78.0
Auto Ignition Point, °C	100.0
Shock Sensitivity, Kg/cm	120.0 (limit of detection)
Heat of Formation, Kcal/gm-mole	-54.4 (estimated)
Specific Heat, cal/gm, 26°C	0.605

TABLE 2. PULSE CHARGE CHARACTERISTICS

	Gun Powder Type	Powder Charge Grains	Burst Diaphragm psi
I	0.38 Special	10 ± 0.05	7,500
II	0.38 Special	15 ± 0.05	10,000
III	0.300 Magnum	20 ± 0.05	20,000
IV	0.300 Magnum	40 ± 0.05	20,000
V	0.300 Magnum	80 ± 0.05	20,000

TABLE 3. TEST RESULTS SUMMARY

Run No.	% Conc. of Additive (by Weight)	Pc (psia)	T_O (°F)	W_O (lb/sec)	T_F (°F)	W_F (lb/sec)	Mixture Ratio	C* (ft/sec)	Corrected C* (ft/sec)	η C^*_c (%)
1B-3	0	284	-264	12.46	64	4.31	2.893	5201	5205	93.4
2B-3	0	282	-277	12.30	73	4.60	2.675	5063	5067	90.0
3B-3	0	251	-268	10.45	76	4.90	2.134	4968	4976	86.6
4B-3	0	237	-290	13.63	46	4.43	3.075	–	–	–
5B-3	0	177	-277	11.16	47	5.10	2.190	–	–	–
6B-3	0	194	-276	11.92	48	4.60	2.589	–	–	–
1B-3a1	6.6	266	-266	13.14	67	4.44	2.960	4599	4606	82.9
2B-3a1	6.6	291	-291	12.80	67	4.74	2.696	5044	5046	90.0
3B-3a1	6.6	264	-284	11.57	68	5.36	2.160	4743	4748	82.3
1B-3a2	10.9	292	-286	13.25	61	4.35	3.050	5034	5036	91.1
2B-3a2	10.9	243	-285	12.60	62	4.61	2.735	4298	4311	76.6
3B-3a2	10.9	209	-285	11.31	63	5.04	2.244	3887	3906	67.9
4B-3a2	10.9	302	-292	12.96	61	4.74	2.736	5185	5185	92.2
5B-3a2	10.9	276	-294	11.57	68	5.08	2.278	5037	5042	87.7
1B-3a3	15.5	493	-294	14.21	68	9.28	1.530	5265	5265	95.0
2B-3a3	15.5	479	-294	16.64	88	7.79	2.135	5013	5017	86.4
3B-3a3	15.5	291	-284	13.09	46	4.42	2.960	4291	4293	77.3
4B-3a3	15.5	304	-287	12.61	54	4.63	2.727	4556	4555	80.9

Notes: (a) T_O and T_F measured at flowmeter
(b) Nozzle throat diameter varied as follows:
Runs 1B-3 thru 3B-3, 1B-3a1 thru 3B-3a1, 1B-3a2 thru 5B-3a2: D_T = 3.467 inches
Runs 3B-3a3, 4B-3a3, 4B-3 thru 6B-3: D_T = 3.507 inches
Runs 1B-3a3, 2B-3a3: D_T = 3.150 inches
(c) Tests 4B-3 thru 6B-3 resulted in nozzle throat erosion
(d) C* for tests 1B-3a3 and 2B-3a3 corrected to P_C = 500 psi; all other tests corrected to P_C = 300 psia
(e) C^*_c is based on the corrected C* values

TABLE 4. SUMMARY OF INSTABILITY RESULTS

Run No.	% Conc. of Additive by Weight	Pc (psia)	Mixture Ratio	Pulses Fired (Grains)	Pulse Resulting with Instab.	Instability Data Mode	Freq. (cps)	P-to-P AMP (psi)	Remarks
1B-3	0	284	2.893	10,15,20,40	40	Spinning 1T	1970	110-115	Counterclockwise Rotation
2B-3	0	282	2.675	10,15,20,40,80	80	Spinning 1T	2010	150-170	Counterclockwise Rotation
3B-3	0	251	2.134	15,20,40,80	40	Spinning 1T	1900	80-90	Counterclockwise Rotation
4B-3	0	237	3.075	80,40	40	Spinning 1T	1850	30-100	Pulses Fired in Reverse Order Counterclockwise Rotation
5B-3	0	177	2.190	80	80	Spinning 1T	1850-1900	80-130	Counterclockwise Rotation
6B-3	0	194	2.589	80	80	Unknown	2000	60-145	Counterclockwise Rotation
1B-3a1	6.6	266	2.960	10,15,20,40	40	Spinning 1T	2000	80-145	
2B-3a1	6.6	291	2.696	15,20,40	40	Spinning 1T	1910-2000	45-100	Counterclockwise Rotation
3B-3a1	6.6	264	2.160	10,15,20,40	40	Spinning 1T	2000	Unknown	Counterclockwise Rotation
1B-3a2	10.9	292	3.050	10,15,20,40,80	80	Spinning 1T	2000	100-140	Counterclockwise Rotation
2B-3a2	10.9	243	2.735	–	–	–	–	–	No Data
3B-3a2	10.9	209	2.244	10	Stable	–	–	–	Premature Cutoff
4B-3a2	10.9	302	2.736	10,15,20,40,80	Stable	–	–	–	
5B-3a2	10.9	276	2.278	10,15,20,40,80	Stable	–	–	–	
1B-3a3	15.5	493	1.530	10,15,20,40,80	Stable	–	–	–	
2B-3a3	15.5	479	2.135	10,15,20,40,80	Stable	–	–	–	
3B-3a3	15.5	291	2.960	10,15,20,40	Stable	–	–	–	80 Gr. Charge Malf.
4B-3a3	15.5	304	2.727	10,15	Stable	–	–	–	Gun Circuit Malf.

Note: Spin Rotation given with reference to looking at the injector face from nozzle end.

TABLE 5. TIME REQUIRED TO DAMP FROM VARIOUS PULSE CHARGE DISTURBANCES

Run No.	% Conc. of Additive (by Weight)	Time to Damp, t_D (milliseconds)				
		10 Gr.	15 Gr.	20 Gr.	40 Gr.	80 Gr.
1B-3	0	38.0	29.5	66.0	Unstable	–
		37.0	25.0	64.5		
2B-3	0	30.5	30.5	49.3	62.2	Unstable
		21.6	27.2	62.9	62.2	
3B-3	0	–	26.3	79.8	Unstable	–
		–	25.5	71.7		
4B-3	0	–	–	–	Unstable	54.0
		–	–	–		51.7
5B-3	0	–	–	–	–	Unstable
		–	–	–	–	
6B-3	0	–	–	–	–	Unstable
		–	–	–	–	
1B-3a1	6.6	27.6	30.0	44.4	Unstable	–
		18.7	31.3	45.0		
2B-3a1	6.6	–	26.8	31.2	Unstable	–
		–	23.0	36.0		
3B-3a1	6.6	19.4	19.1	26.1	Unstable	–
		12.0	19.1	32.8		
1B-3a2	10.9	26.2	22.1	30.0	55.5	Unstable
		28.8	20.6	33.7	59.1	
2B-3a2	10.9	Malf - High Frequency Data did not record				
3B-3a2	10.9	20.0	Cutoff occurred prior to firing			
		16.0	other pulse charges			
4B-3a2	10.9	24.0	22.0	25.5	45.0	71.0
		22.5	21.0	27.0	45.0	71.0
5B-3a2	10.9	20.0	22.5	17.0	24.0	29.5
		15.5	21.0	22.0	30.0	35.5
1B-3a3	15.5	18.7	15.7	26.8	34.8	39.2
		18.7	22.5	27.5	34.8	44.7
2B-3a3	15.5	3A-1	Photocon Parameter lost			
		20.6	20.8	25.1	32.7	52.6
3B-3a3	15.5	45.0	38.0	39.0	48.0	Pulse Gun
		32.0	30.0	40.0	48.0	Malf.
4B-3a3	15.5	18.0	22.0	Pulse Gun Malf.		
		17.0	18.0			

Notes: (a) t_D defined as the time required for pressure disturbance to attenuate to ± 5% of the steady-state chamber pressure.
(b) Pulse guns fired in reverse order during runs 4B-3, 5B-3, 6B-3.
(c) t_D measured by the two high frequency response pressure transducers located in the chamber and is provided in the order P_{D_1} P_{D_2}

TABLE 6 - PULSE PRESSURE SUMMARY

Run No.	% Conc. of Additive	Pulse Pressure (PSI) - ΔP_{pulse} / ΔP_{max} 10 Gr.	15 Gr.	20 Gr.	40 Gr.	80 Gr.
1B-3	0	170	196	461	253	-
		273	402	672	576	-
2B-3	0	270	215	495	225	215
		415	440	545	600	720
3B-3	0	160	565	225		
		285	565	535		
4B-3	0	-	-	-	200	160
					500	490
5B-3	0	-	-	-	-	120
		-	-	-	-	560
6B-3	0	-	-	-	-	90
		-	-	-	-	640
1B-3al	6.6	410	250	485	265	-
		410	450	645	620	-
2B-3al	6.6	-	190	515	190	-
		-	420	515	600	-
3B-3al	6.6	-	-	-	-	-
		-	-	-	-	-

TABLE 6 - (CONTINUED

Run No.	% Conc. of Additive	Pulse Pressure (PSI) - ΔP_{pulse} / ΔP_{max} 10 Gr.	15 Gr.	20 Gr.	40 Gr.	80 Gr.
1B-3a2	10.9	215	220	505	225	160
		395	420	645	600	730
2B-3a2	10.9	-	-	-	-	-
		-	-	-	-	-
3B-3a2	10.9	230	-	-	-	-
		330	-	-	-	-
4B-3a2	10.9	270	170	335	165	125
		335	305	490	475	550
5B-3a2	10.9	180	180	320	140	135
		250	325	455	420	480
1B-3a3	15.5	95	190	455	350	160
		180	355	690	750	765
2B-3a3	15.5	145	210	530	400	175
		355	335	620	725	700
3B-3a3	15.5	239	330	605	295	-
		457	570	605	635	-
4B-3a3	15.5	215	265	-	-	-
		455	317	-	-	-

NOTE:

Pulse Pressure data presented in the order ΔP_{pulse} / ΔP_{max} for each pulse charge.

See Figure 10 for identification parameters.

TABLE 7

THEORETICAL ACOUSTIC MODE FREQUENCIES 15" DIAMETER PULSE MOTOR ASSY.

INSTABILITY MODE	THEORETICAL FREQUENCY * (CPS)
1 Tangential	1960
2 Tangential	3220
3 Tangential	4440
1 Radial	4050
2 Radial	7385
1 Longitudinal**	2765
2 Longitudinal**	5534

Assumes 100% Theoretical C.

**Assumes Effective Chamber Length of 9".

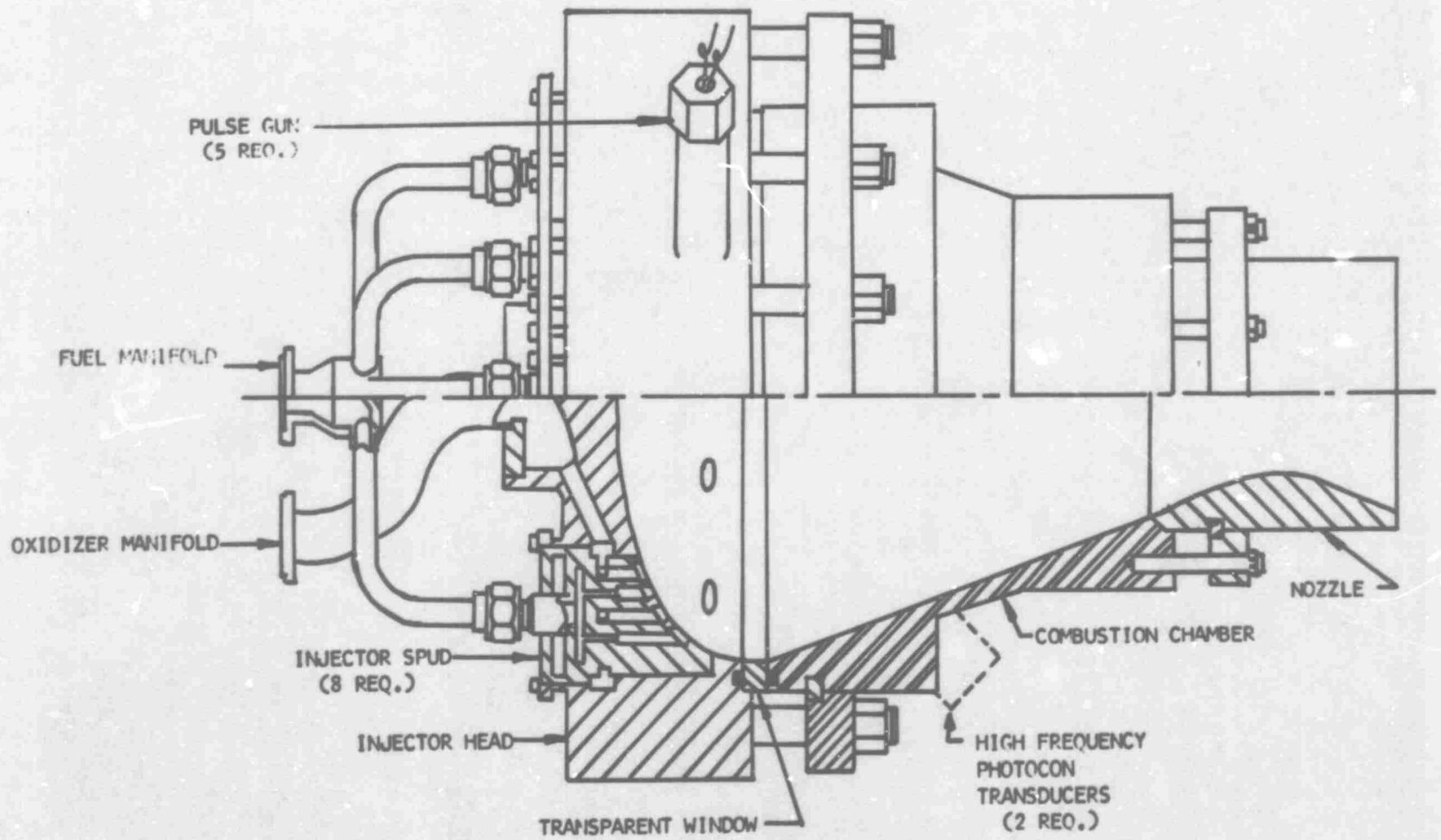

Figure 1 - 15" Diameter, Dished Head, Conical Pulse Motor Assembly Schematic

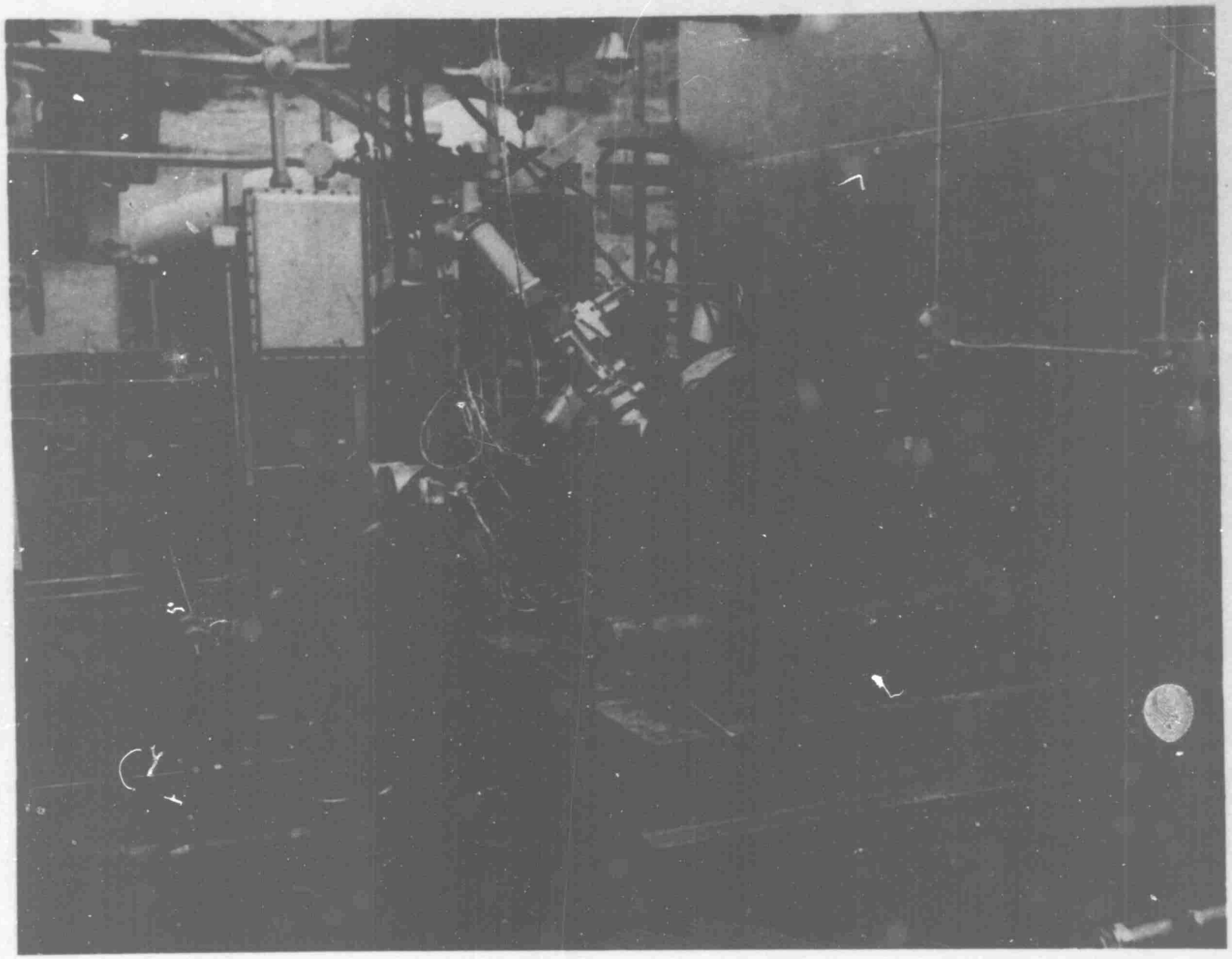

Figure 2. Pulse Motor Assembly Mounted on Test Stand

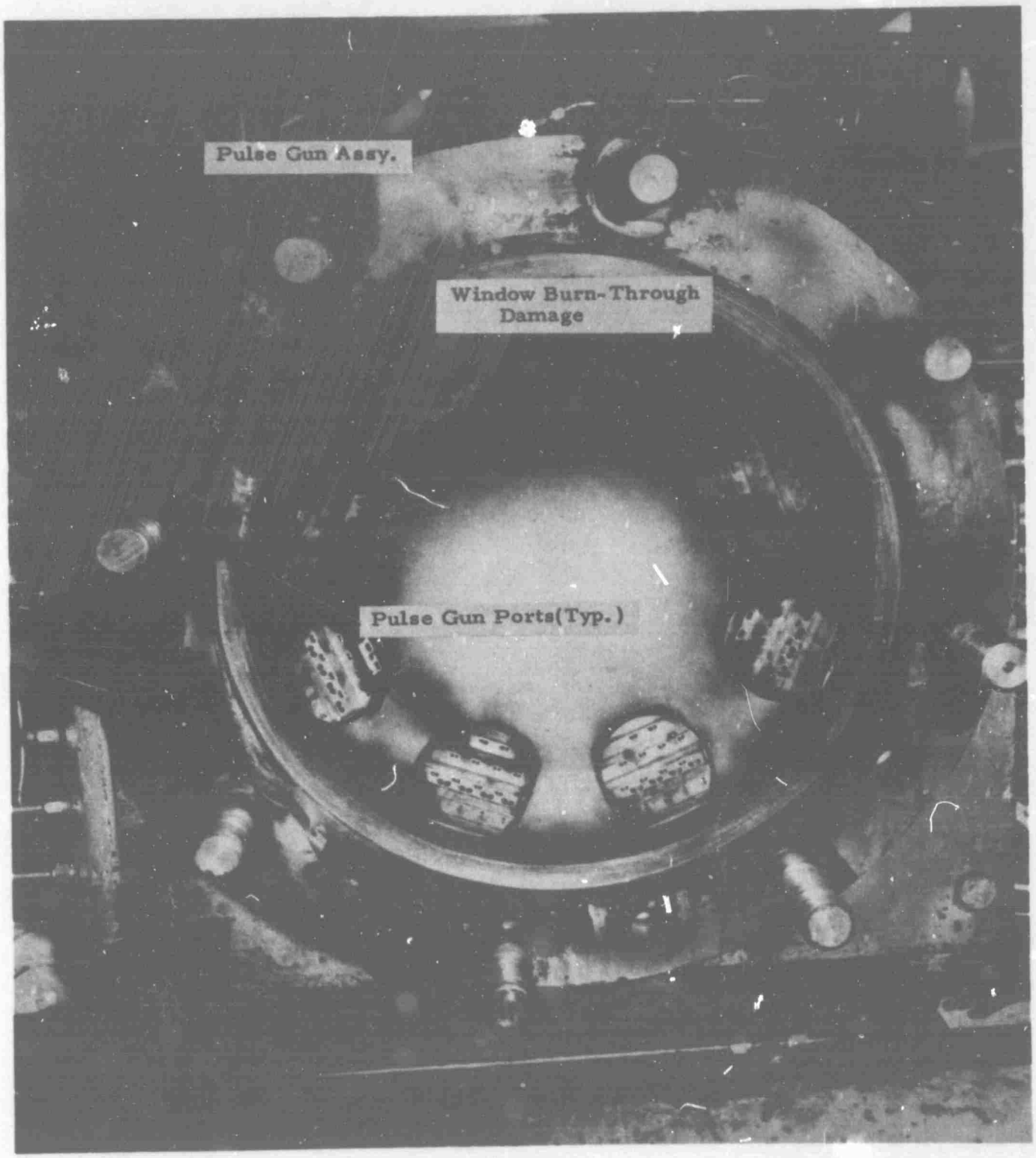

Figure 3. 15" Diameter, Pulse Motor Dished Injector Head

LIKE-ON-LIKE IMPINGING DOUBLET (B-PATTERN)

ROW	RADIUS*	TYPE	TOTAL NO. PAIR	ORIFICE DIAS.	IMP. DIST.	ANGLE OF IMP.	ELEMENT SPACING	ORIFICE L/D
1	5.175	OXID	2	.0922	.116	60°	.550	2.71
2	5.715	FUEL	4	.0632	.094	60°	.550	3.86
3	6.275 6.570	OXID	4 4	.0697 .120	.094 .139	60°	.550 .550	3.48 2.30
4	6.831	FUEL	4	.0466	.098	55°	.550	5.24 3.00

*RADIUS GIVEN FROM MOTOR CENTERLINE TO ROW

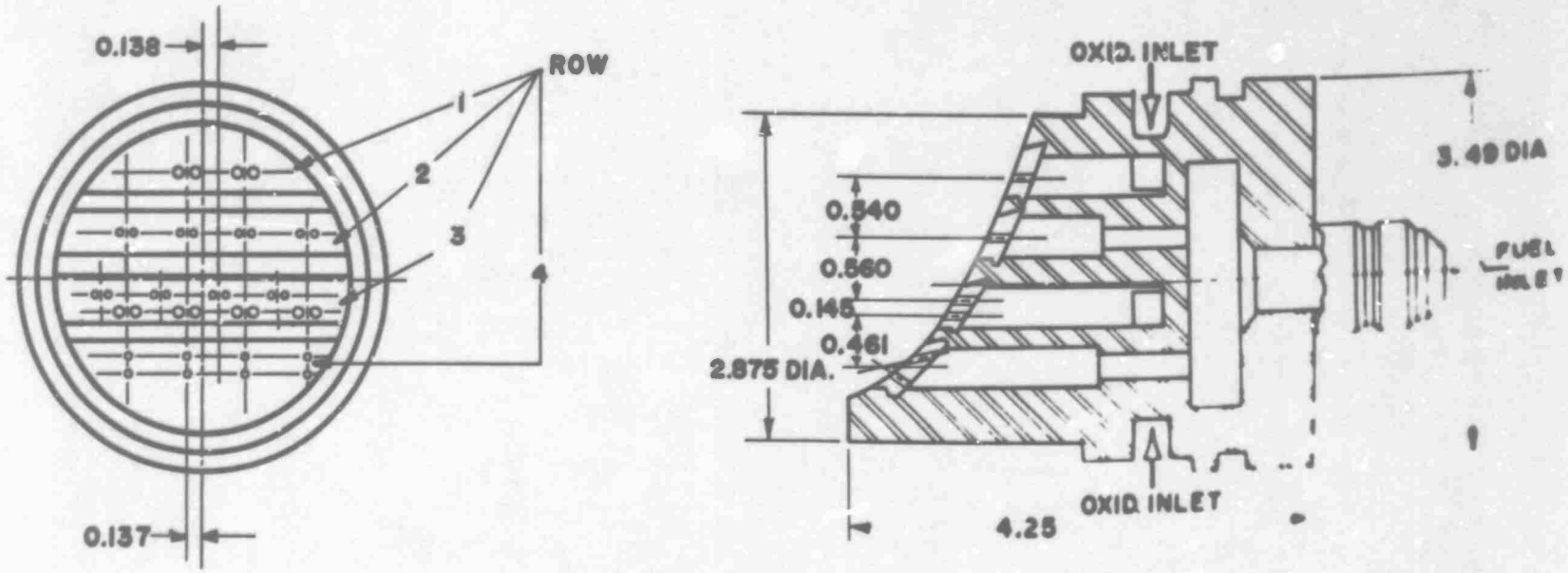

Figure 4. 15" Dia. Pulse Motor Injector Spud- Description of Like-on-Like Impinging Doublet Injector Pattern

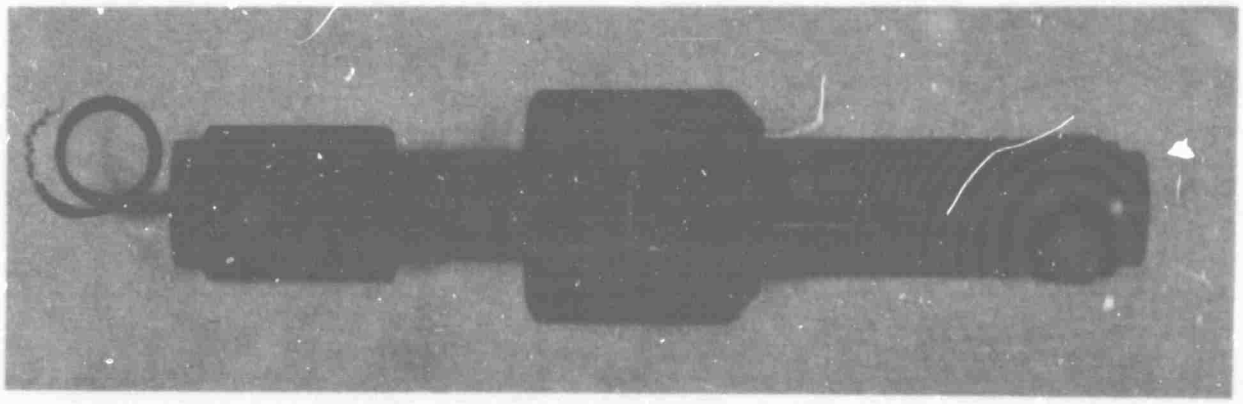

Figure 5. The Pulse Gun Stability Rating Device

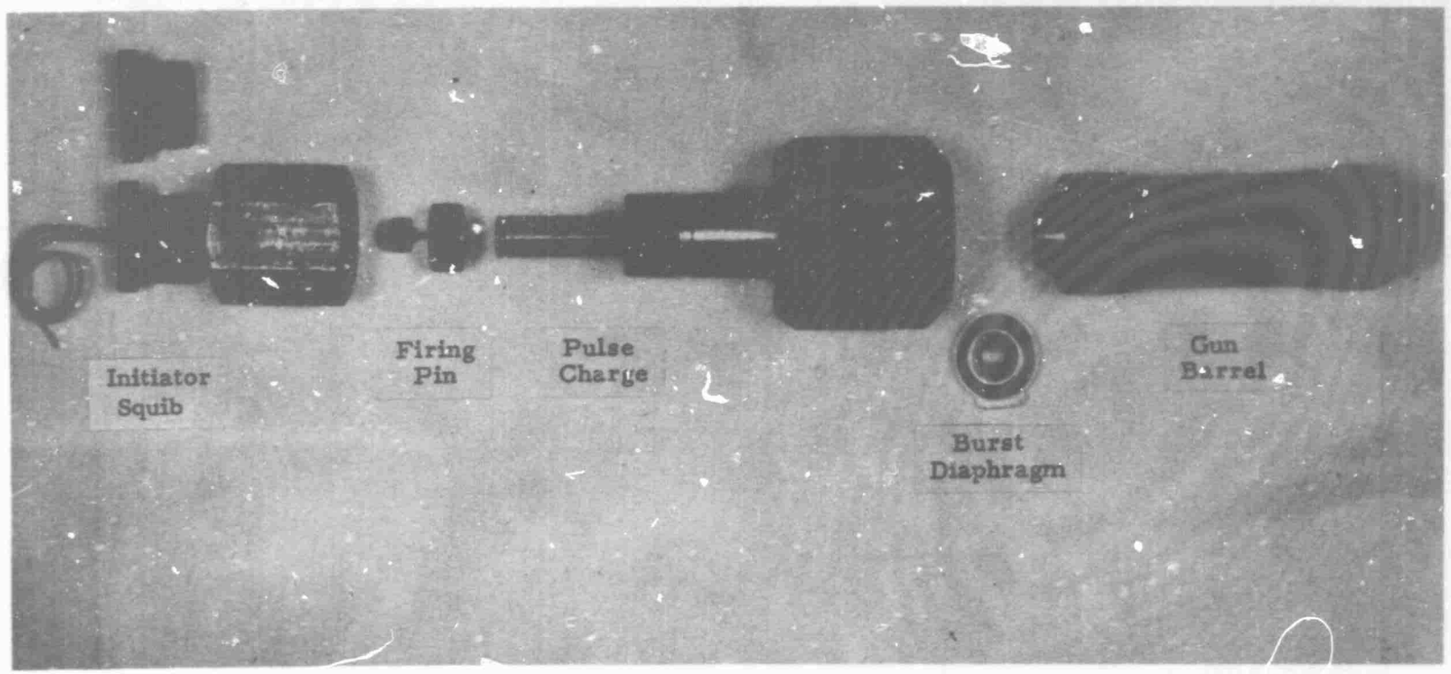

Figure 6. Major Components of the Pulse Gun

−3	3.150	11.480	2.480
−2	3.467	11.349	2.349
−1	3.507	11.349	2.349
	T_{DIA}	L	X

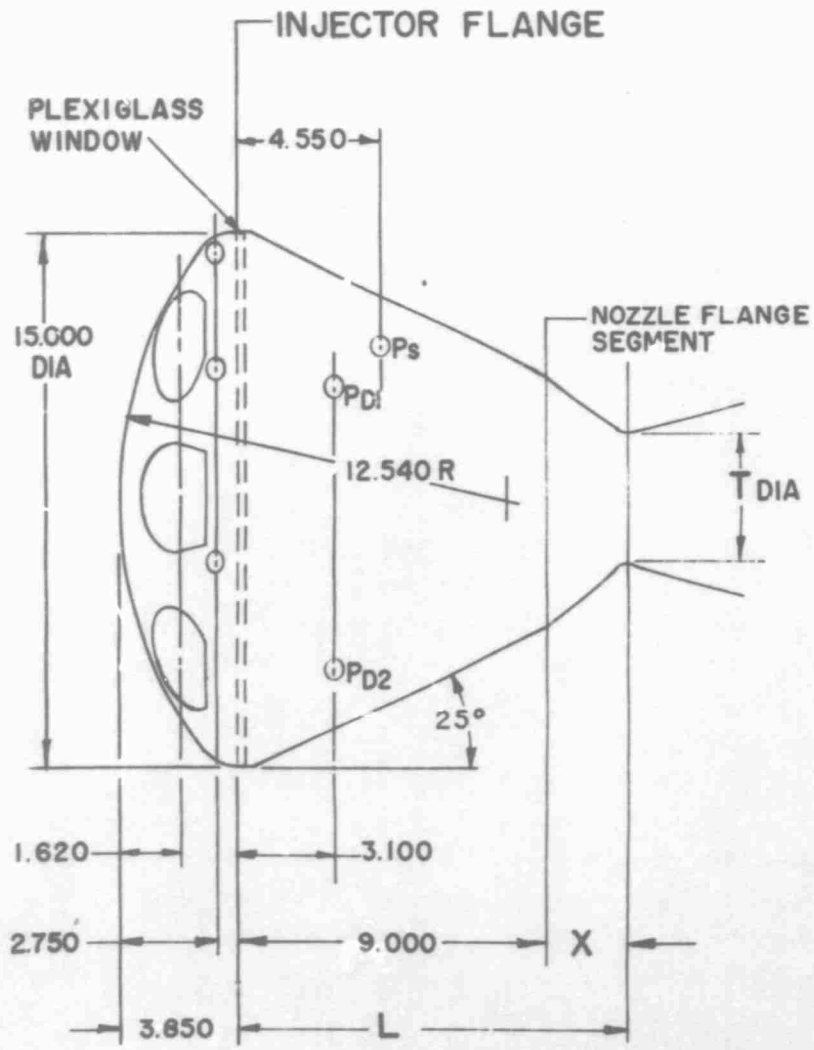

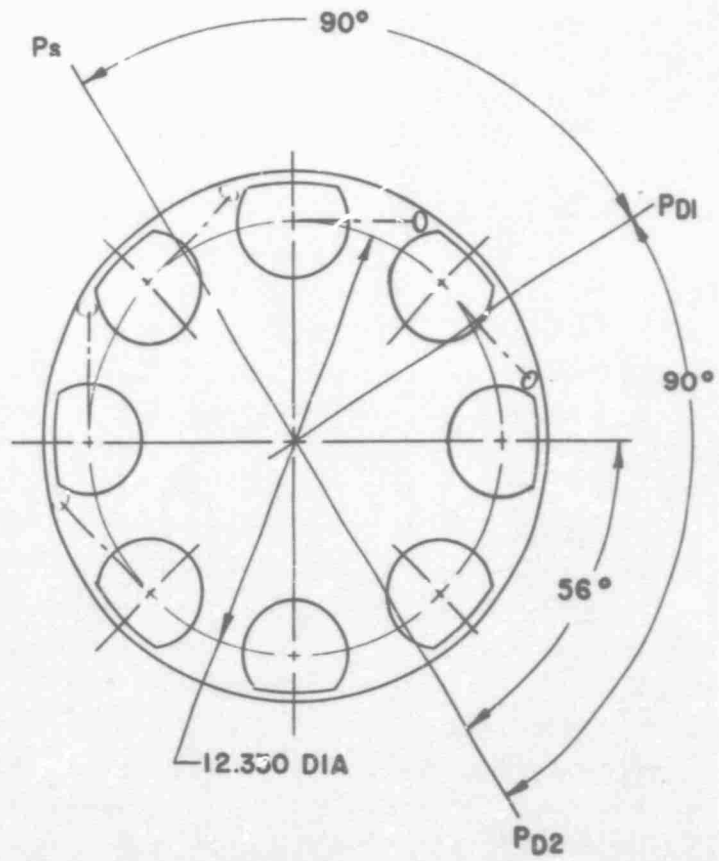

NOTE: P_{D1} AND P_{D2} LOCATED AT 12.100 INTERNAL DIA

Figure 7. Pulse Motor Assembly Instrumentation Location Schematic

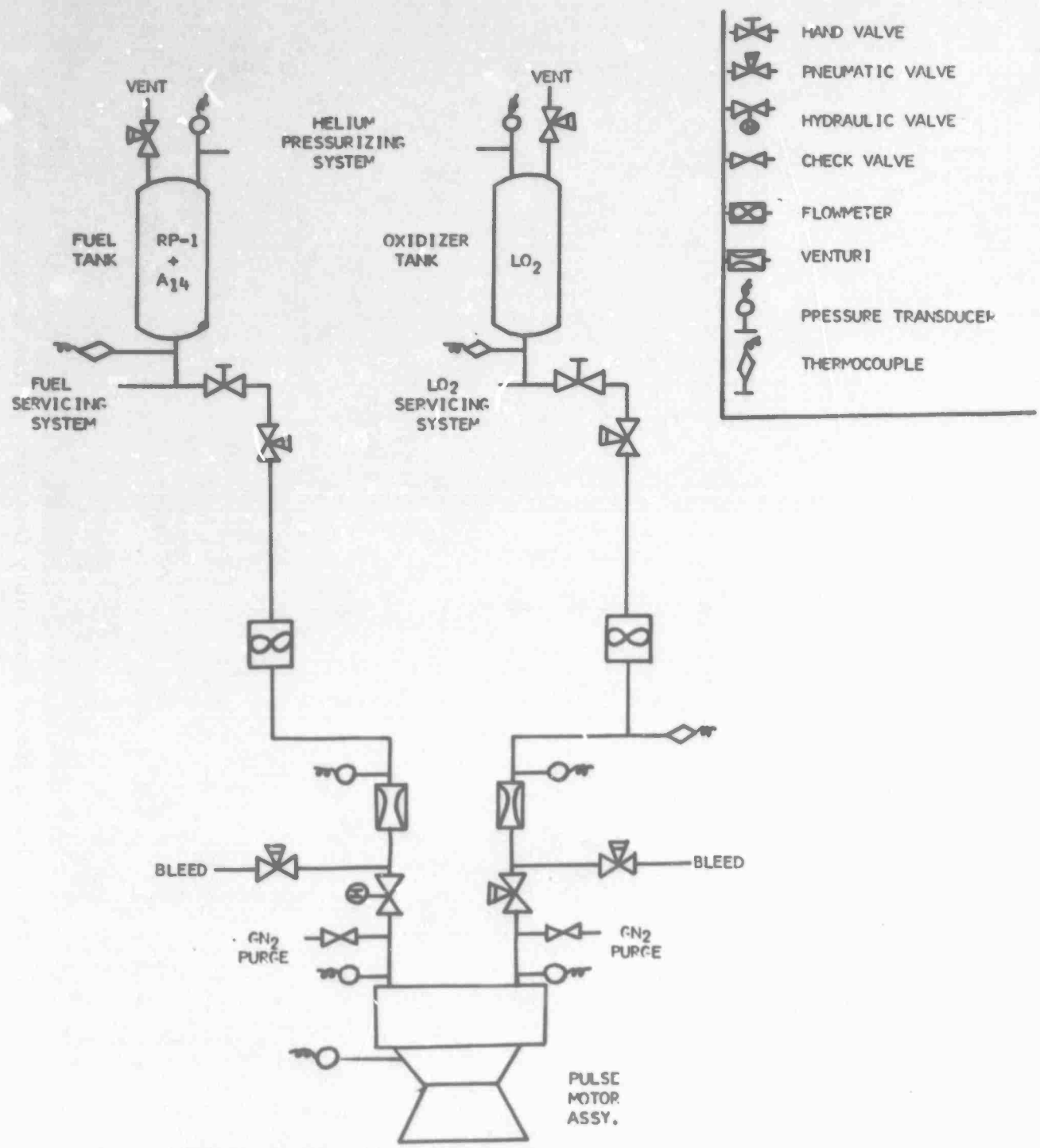

Figure 8. Test System Schematic

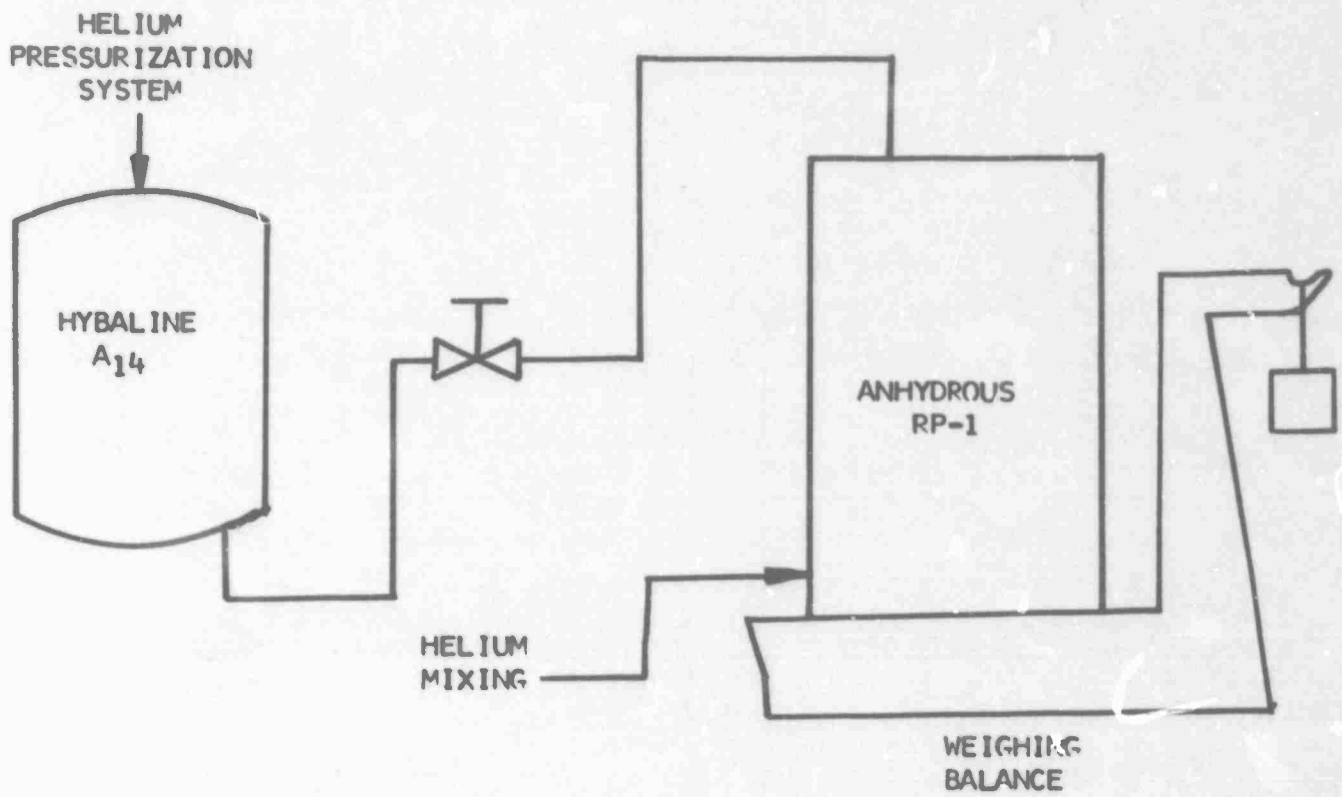

PROCEDURE

1. EMPTY RP-1 TANK IS WEIGHED.

2. DESIRED AMOUNT OF RP-1 IS TRANSFERRED TO TANK FROM SHIPPING VESSEL. TANK IS AGAIN WEIGHED.

3. HYBALINE A_{14} IS ADDED TO RP-1 UNTIL DESIRED CONCENTRATION (WEIGHT OF SOLUTION) IS REACHED. ENTIRE SYSTEM IS KEPT AS FREE AS POSSIBLE FROM WATER AND AIR.

4. HYBALINE A_{14} AND RP-1 MIXED BY BUBBLING HELIUM THROUGH SYSTEM.

5. CONCENTRATIONS VERIFIED BY MEANS OF LABORATORY SAMPLES.

Figure 9. RP-1 Plus Hybaline A_{14} Propellant Preparation

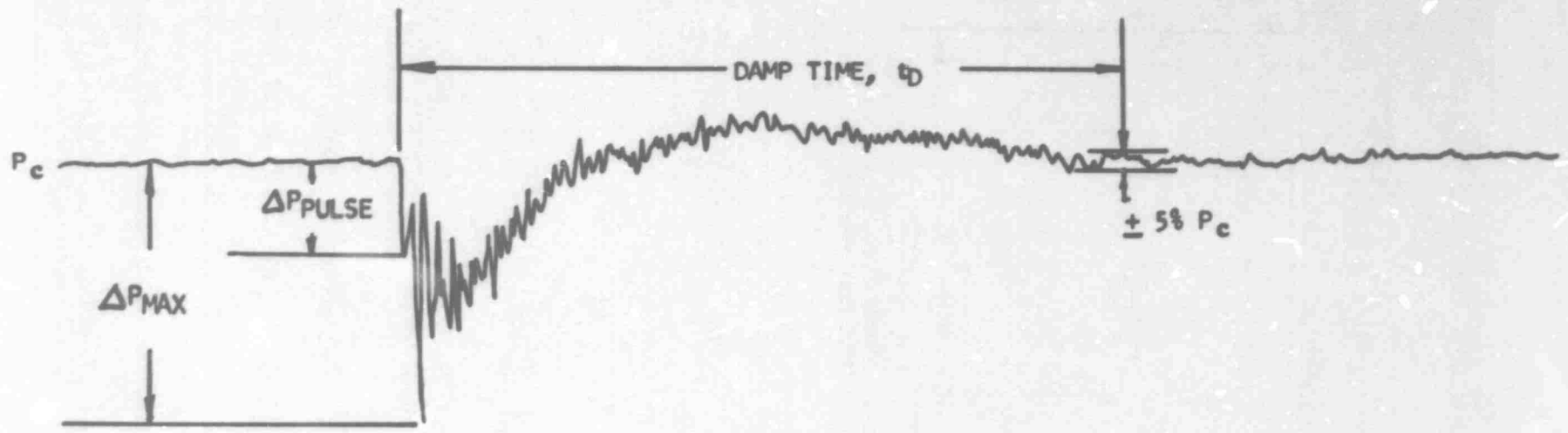

Figure 10. Identification Parameters - Chamber Pressure Disturbance

NOTE:

CURVE FIT STARTED AT FOUR (4) MILLISECONDS AFTER DISTURBANCE INITIATION.

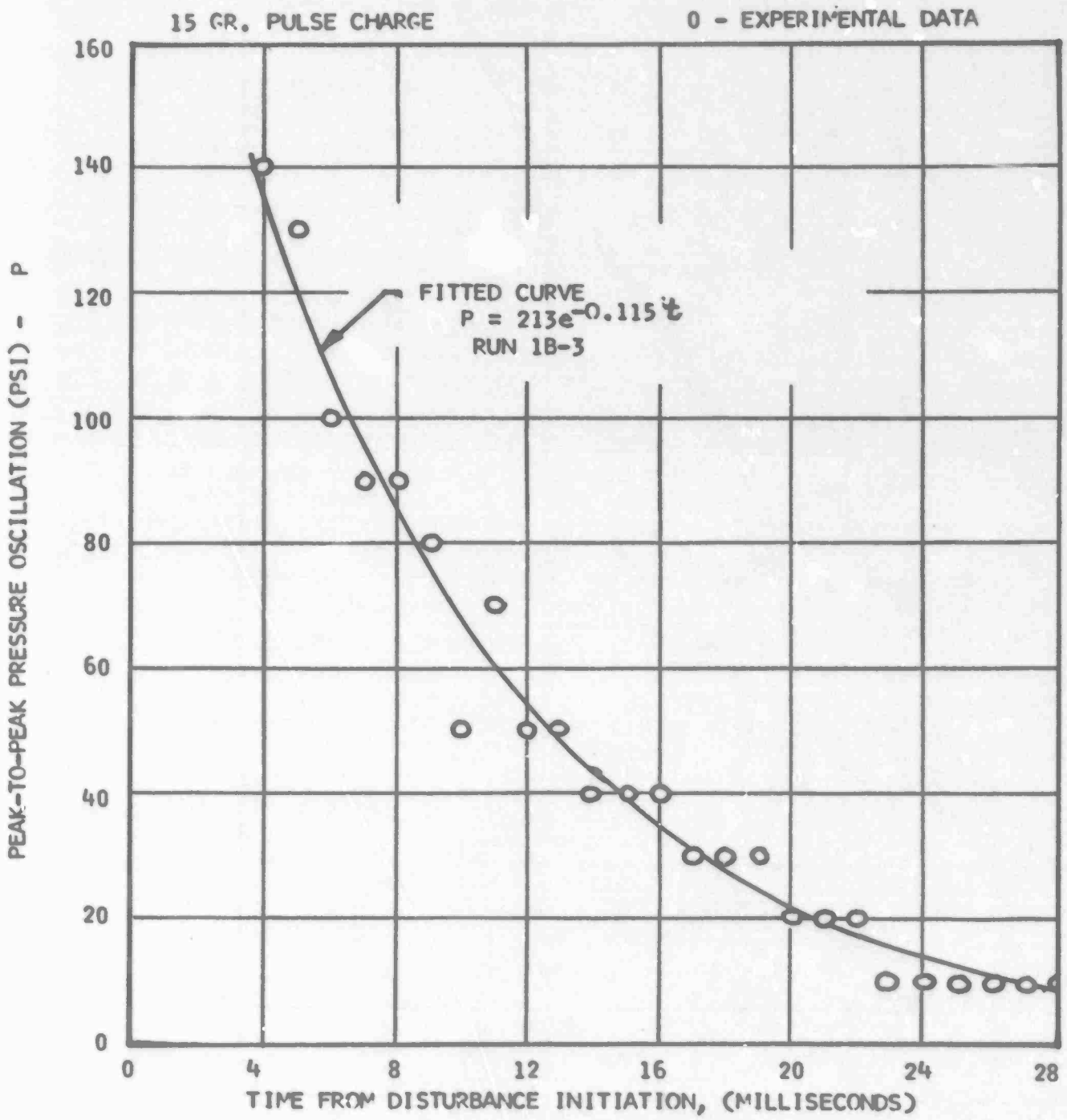

Figure 11. Typical Curve Fitted to Pressure Decay Data

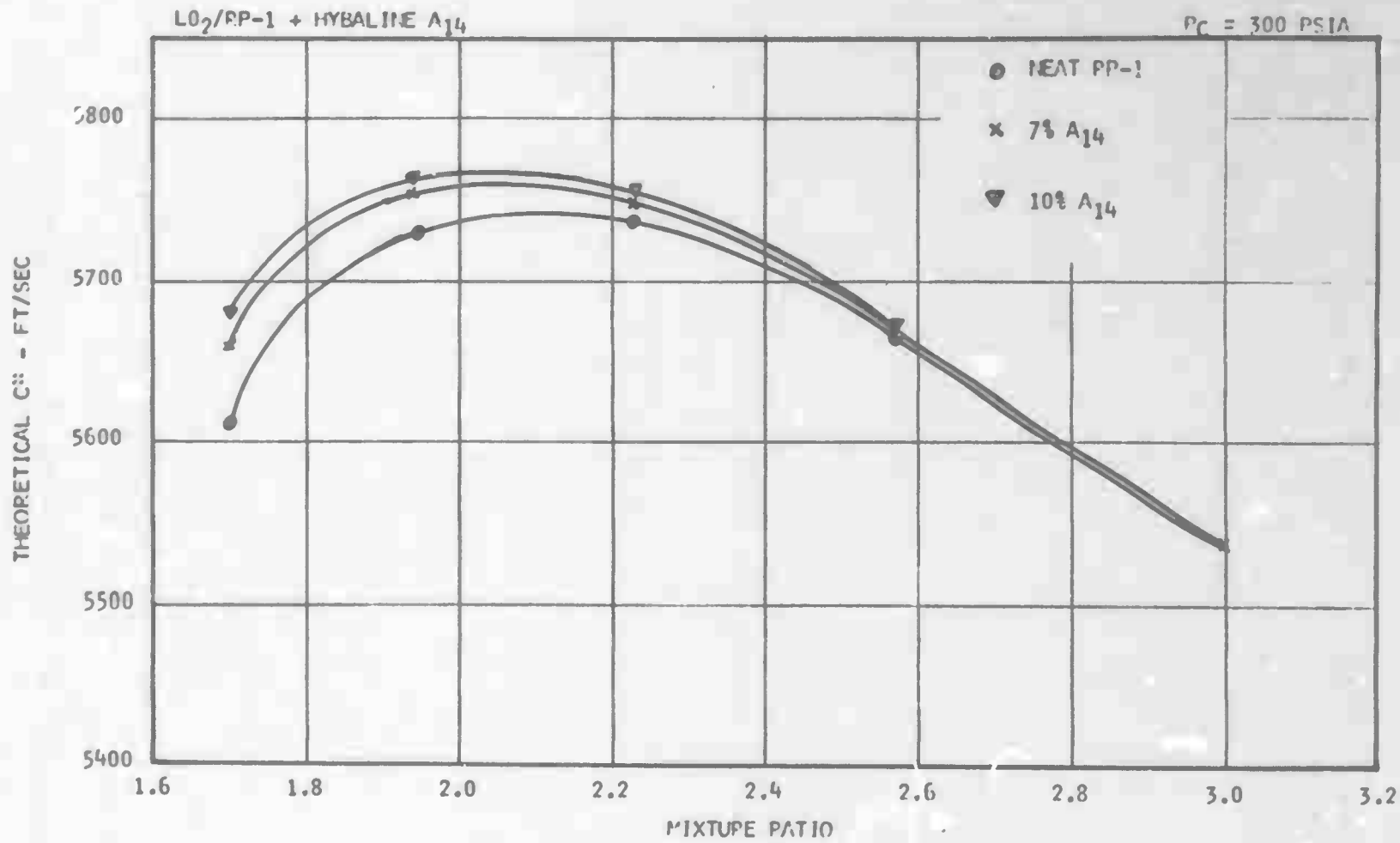

Figure 12. Theoretical C* versus Mixture Ratio, LO_2/RP-1 Plus A_{14}, Pc = 3000 psia

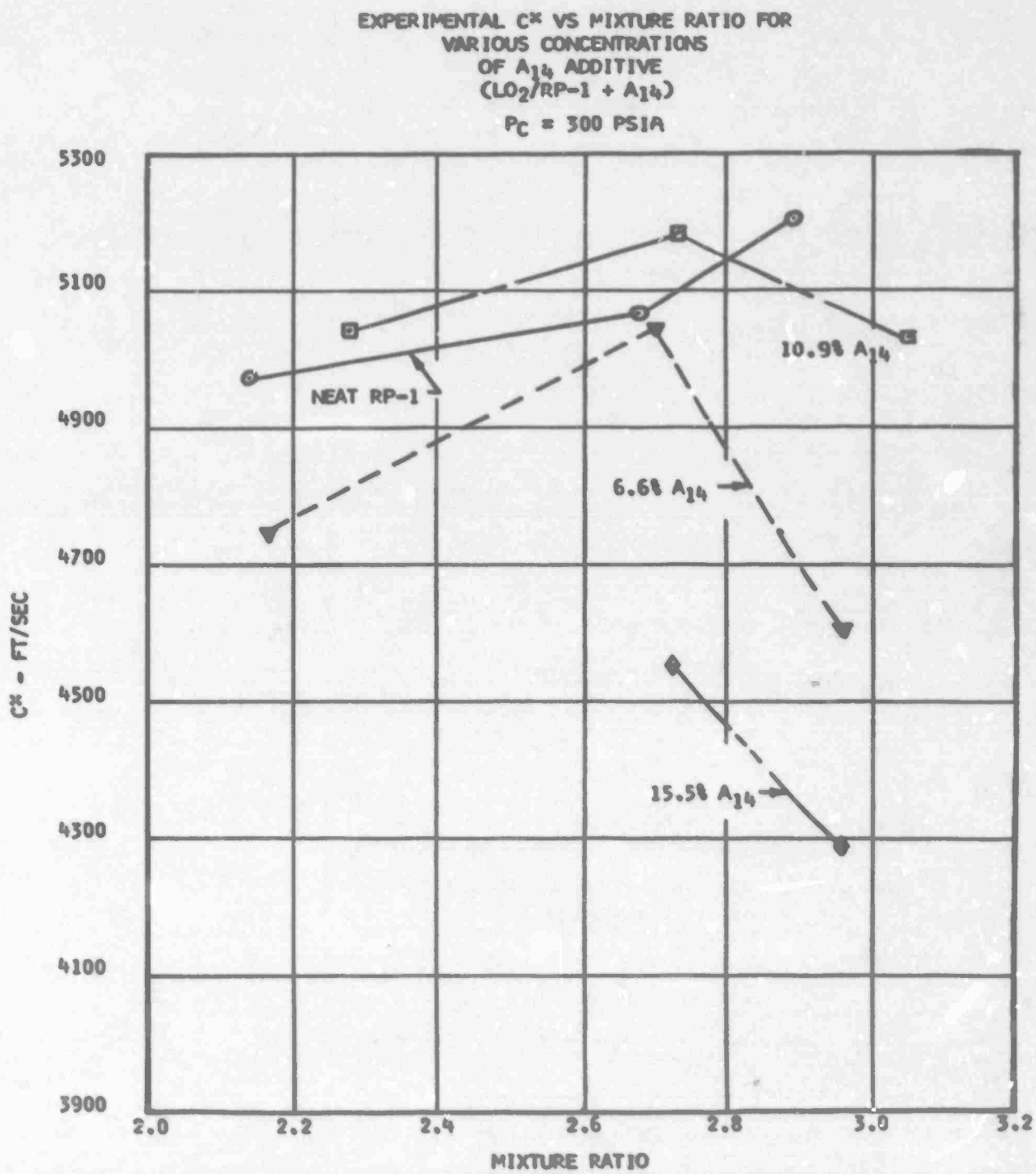

Figure 13. Experimental C* vs Mixture Ratio for Various Concentrations of A_{14} Additive

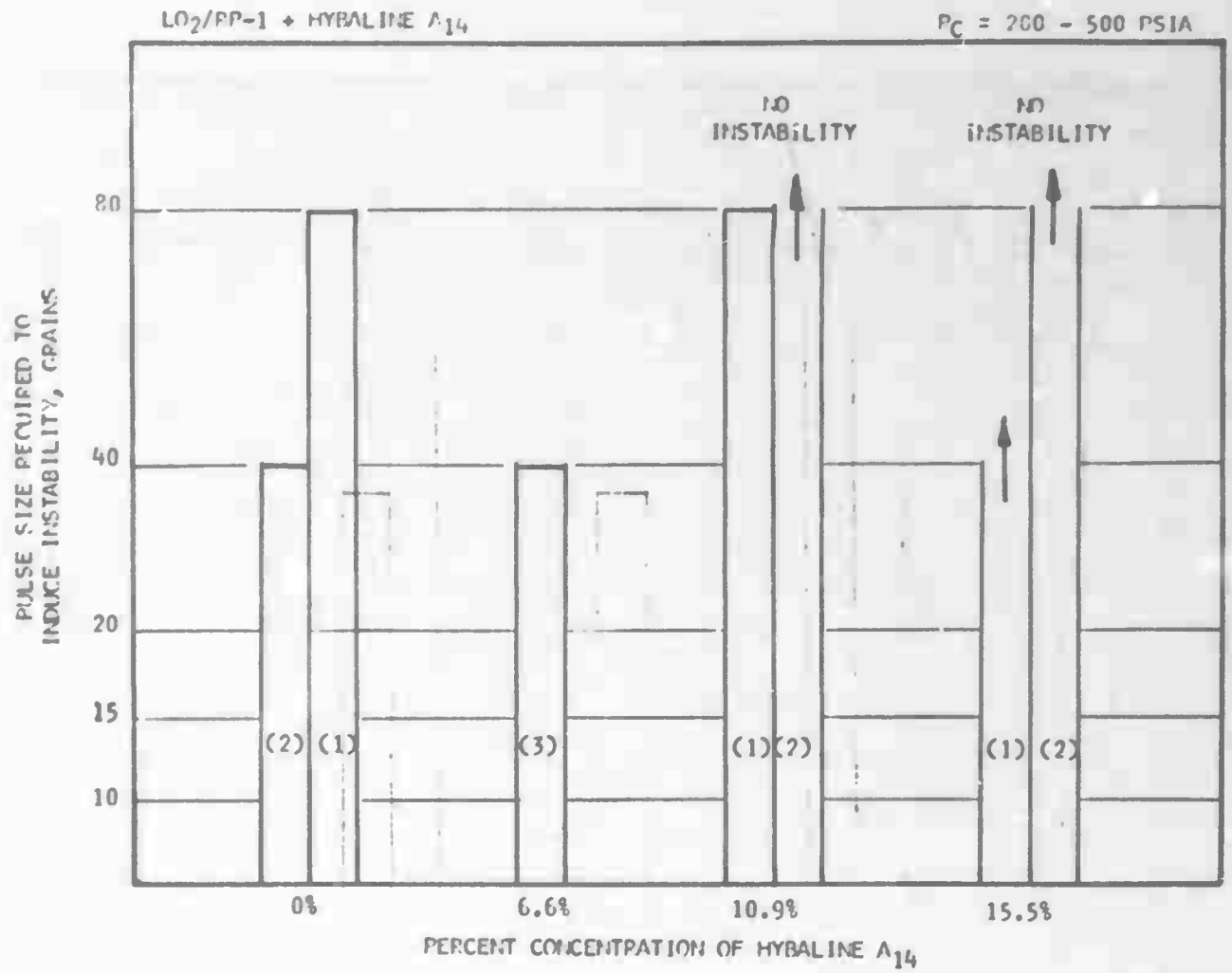

NOTES:

(A) REVERSE PULSE TESTS 4B-3 THROUGH 6B-3 NOT SHOWN.
(B) TEST 4B-3A3 NOT INCLUDED WITH 15.5% RESULTS.

Figure 14. General Instability Test Summary

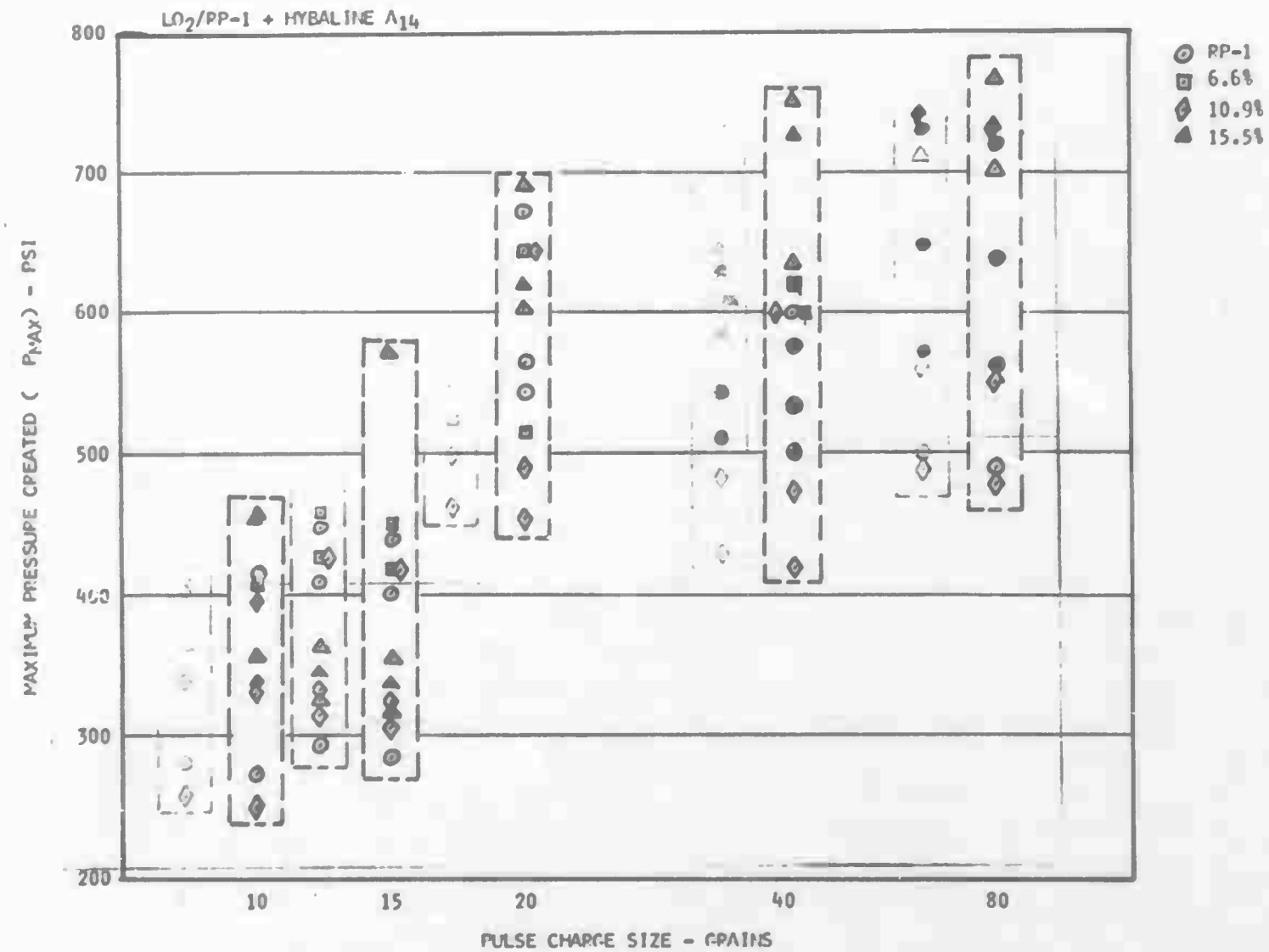

(BLACKENED-IN SYMBOLS REPRESENT UNSTABLE TESTS)

Figure 15. Maximum Pressure Created by Disturbances

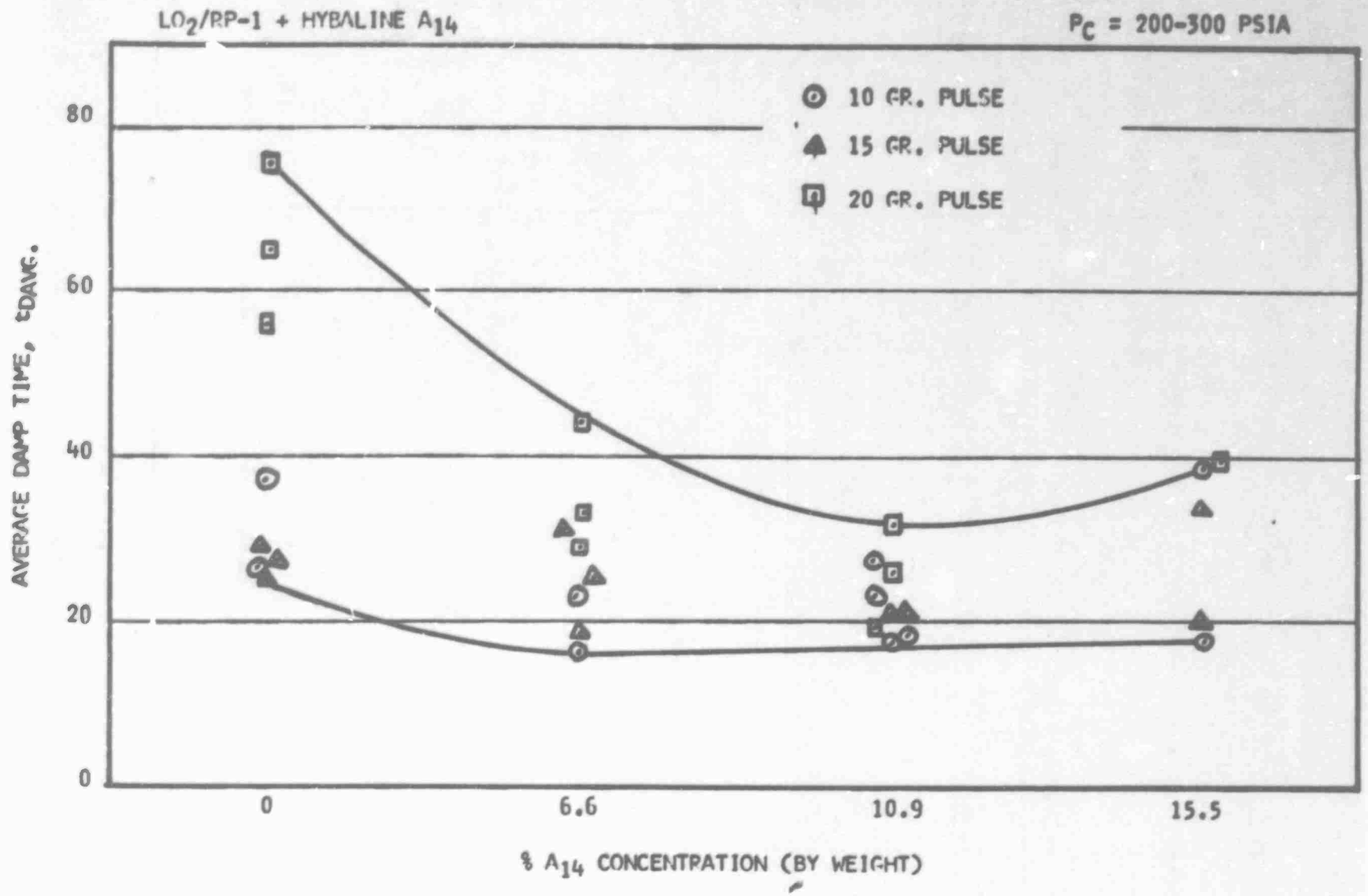

Figure 16. Time to Damp Required for Various A_{14} Concentrations

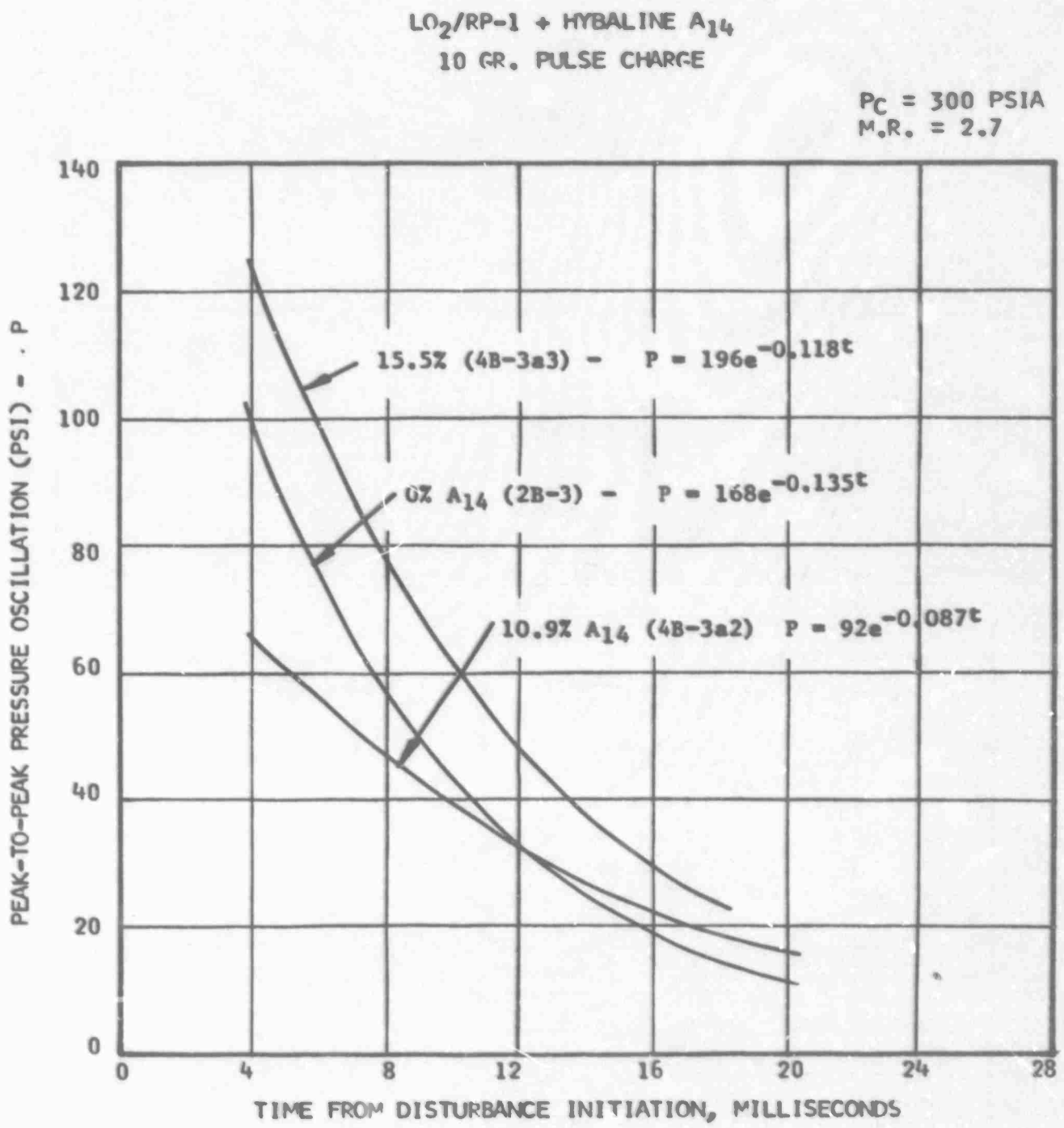

NOTE: NO DATA AVAILABLE FOR 6.0% CONCENTRATION.

Figure 17. Damping Rate Comparison for Various Concentrations of A_{14} Additive; 10 Grain Pulse Charge - Mixture Ratio = 2.7

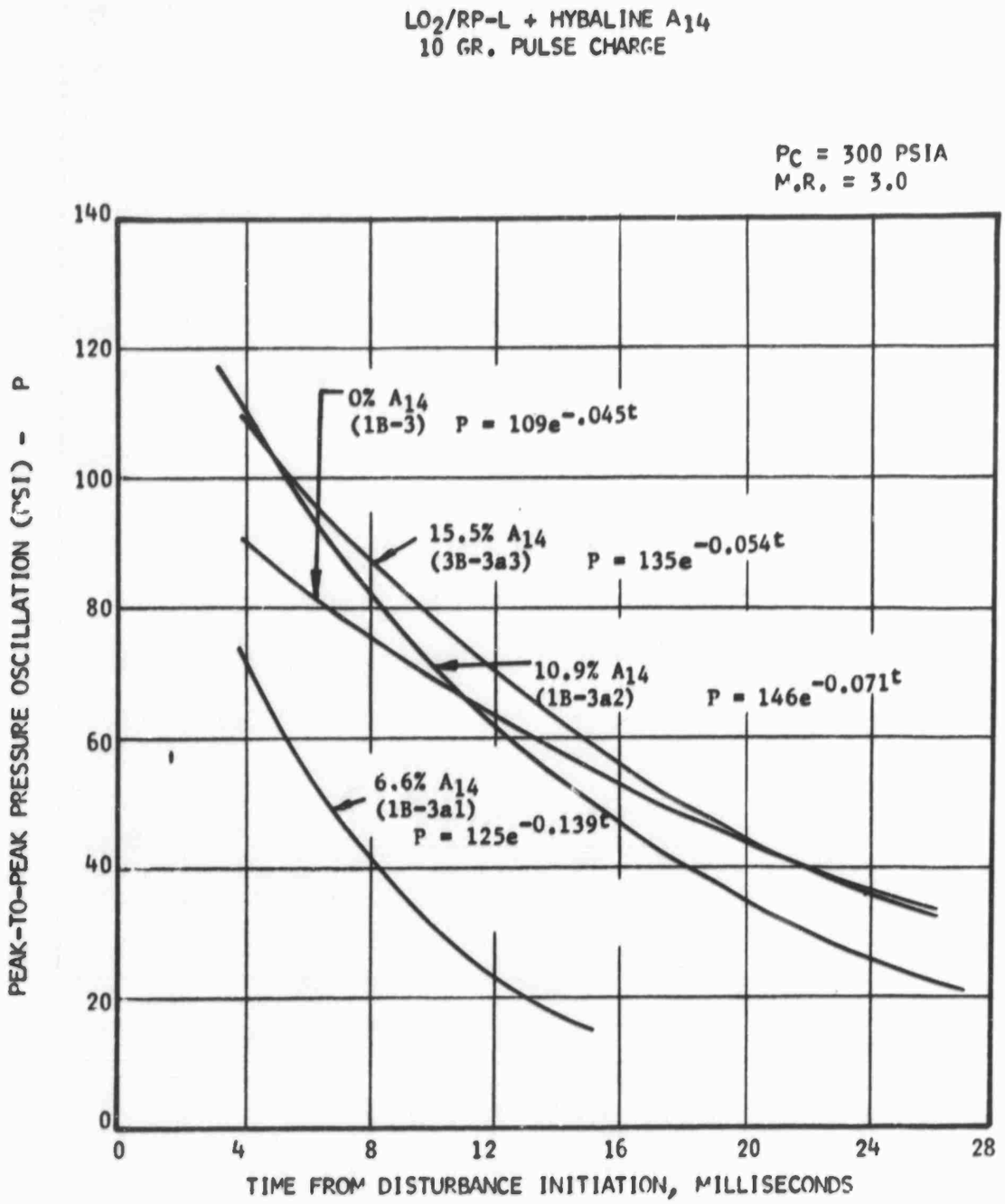

Figure 18. Damping Rate Comparison for Various Concentrations of A_{14} Additive; 10 Grain Pulse Charge - Mixture Ratio = 3.0

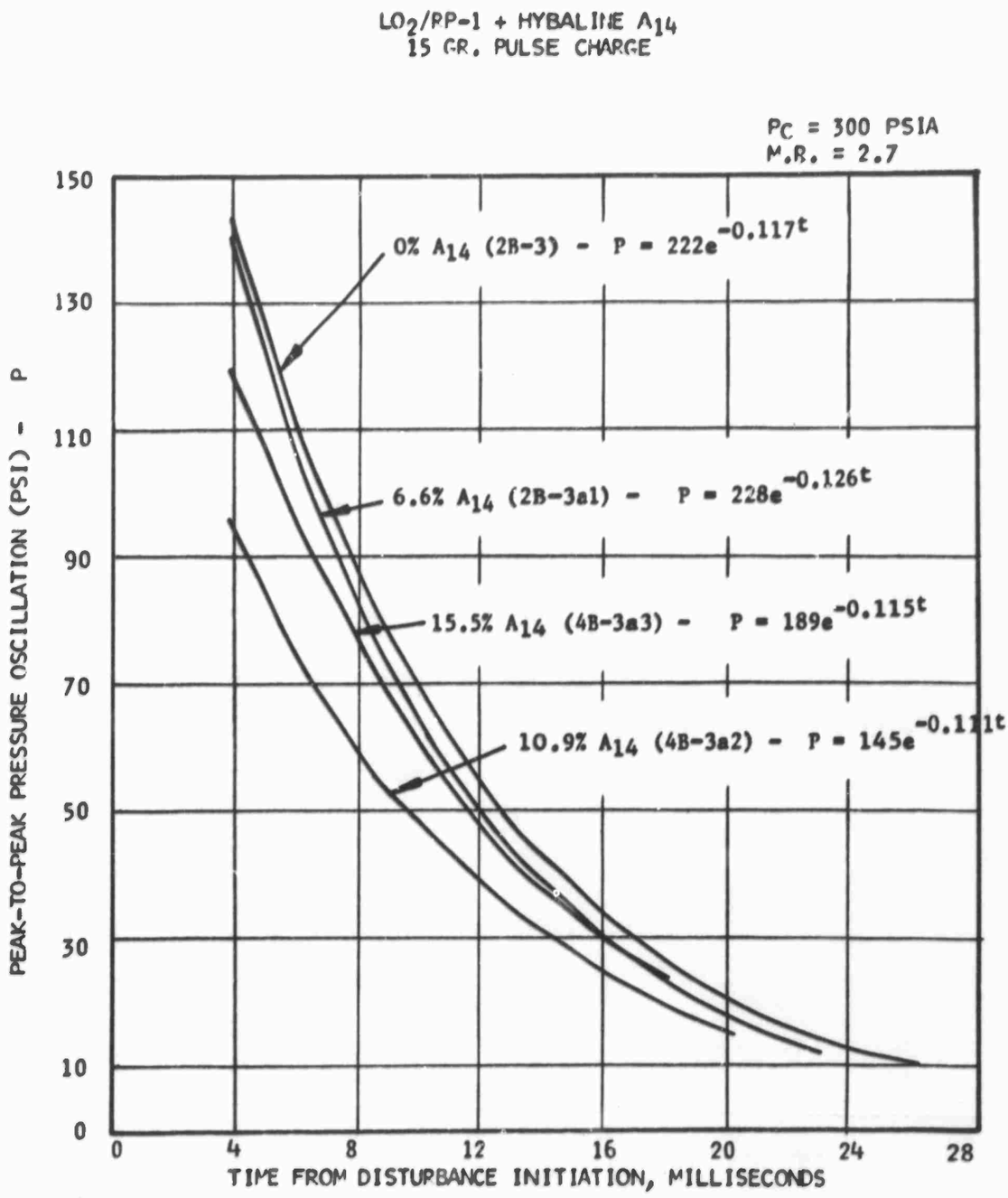

Figure 19. Damping Rate Comparison for Various Concentrations of A_{14} Additive; 15 Grain Pulse Charge - Mixture Ratio = 2.7

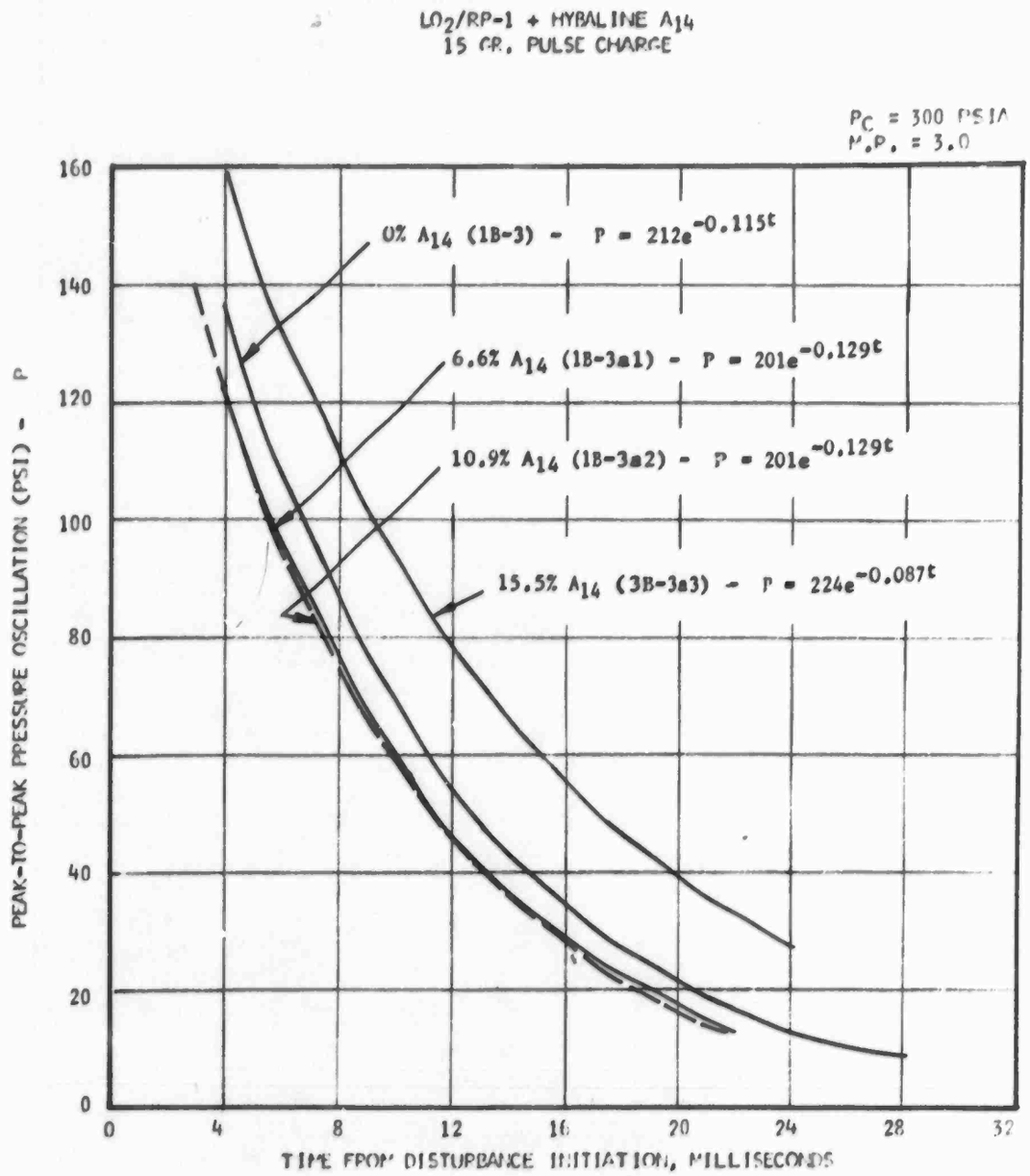

Figure 20. Damping Rate Comparison for Various Concentrations of A_{14} Additive; 15 Grain Pulse Charge - Mixture Ratio = 3.0

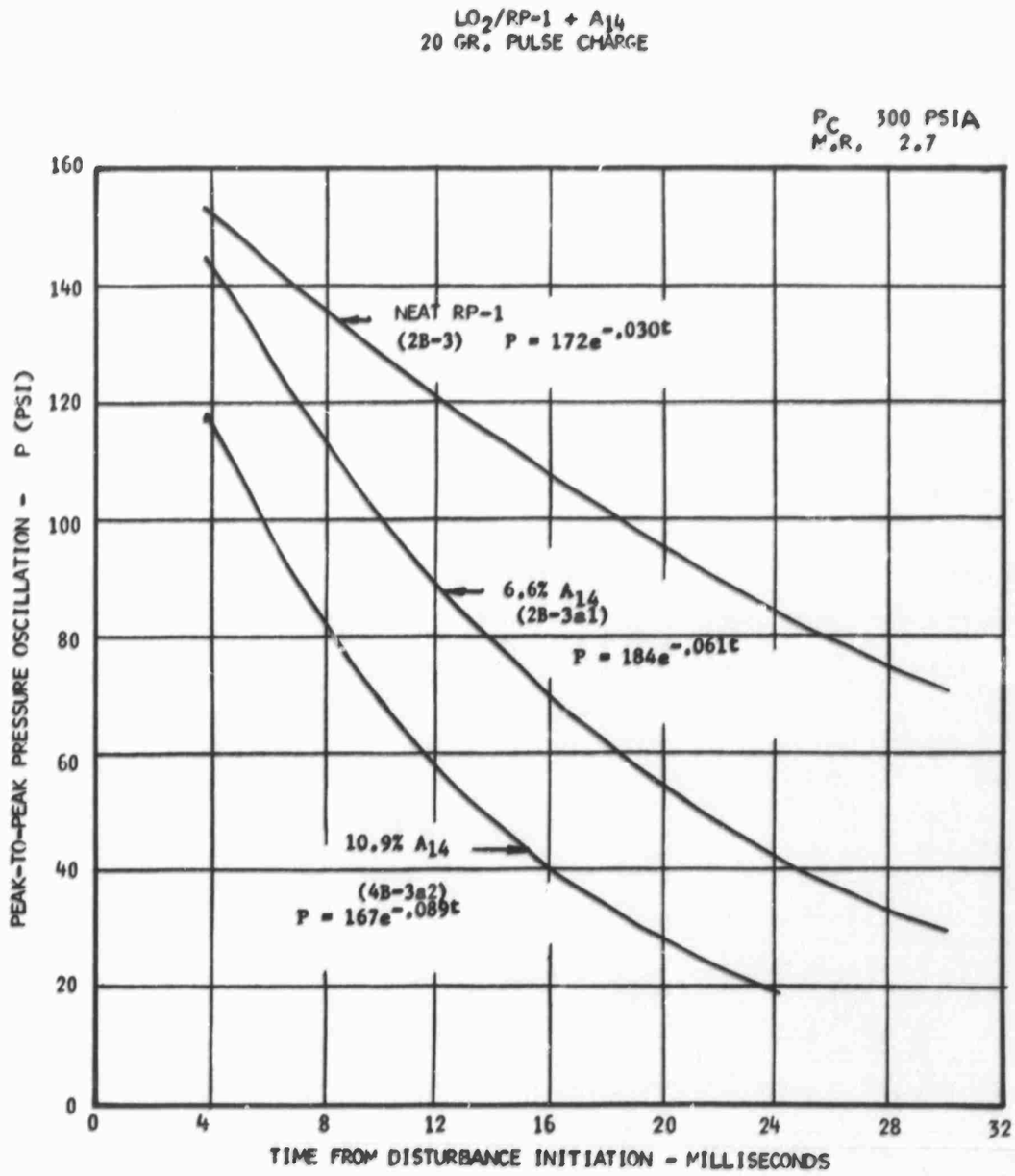

Figure 21. Damping Rate Comparison for Various Concentrations of A_{14} Additive; 20 Grain Pulse Charge - Mixture Ratio = 2.7

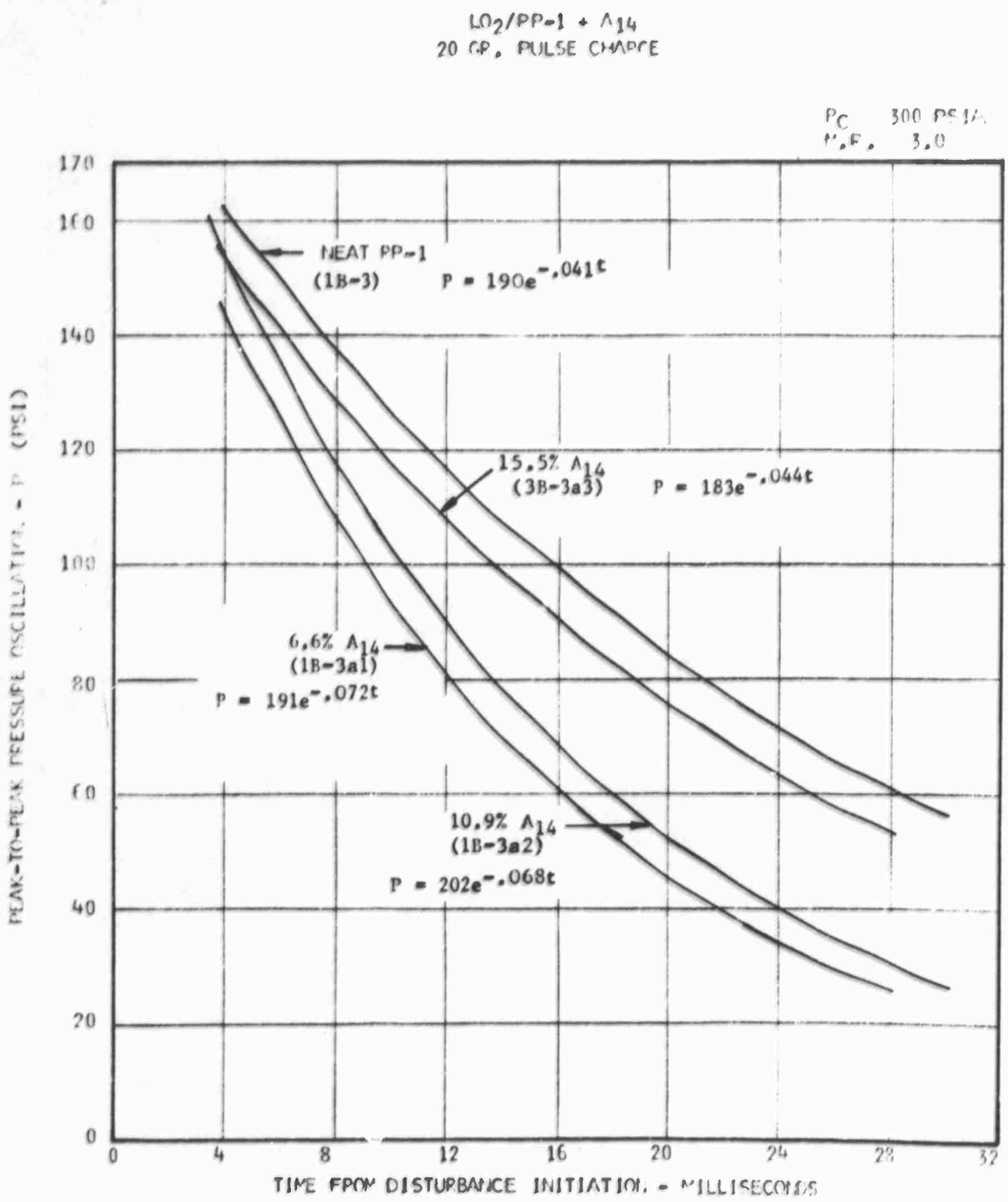

Figure 22. Damping Rate Comparison for Various Concentrations of A_{14} Additive; 20 Grain Pulse Charge - Mixture Ratio = 3.0

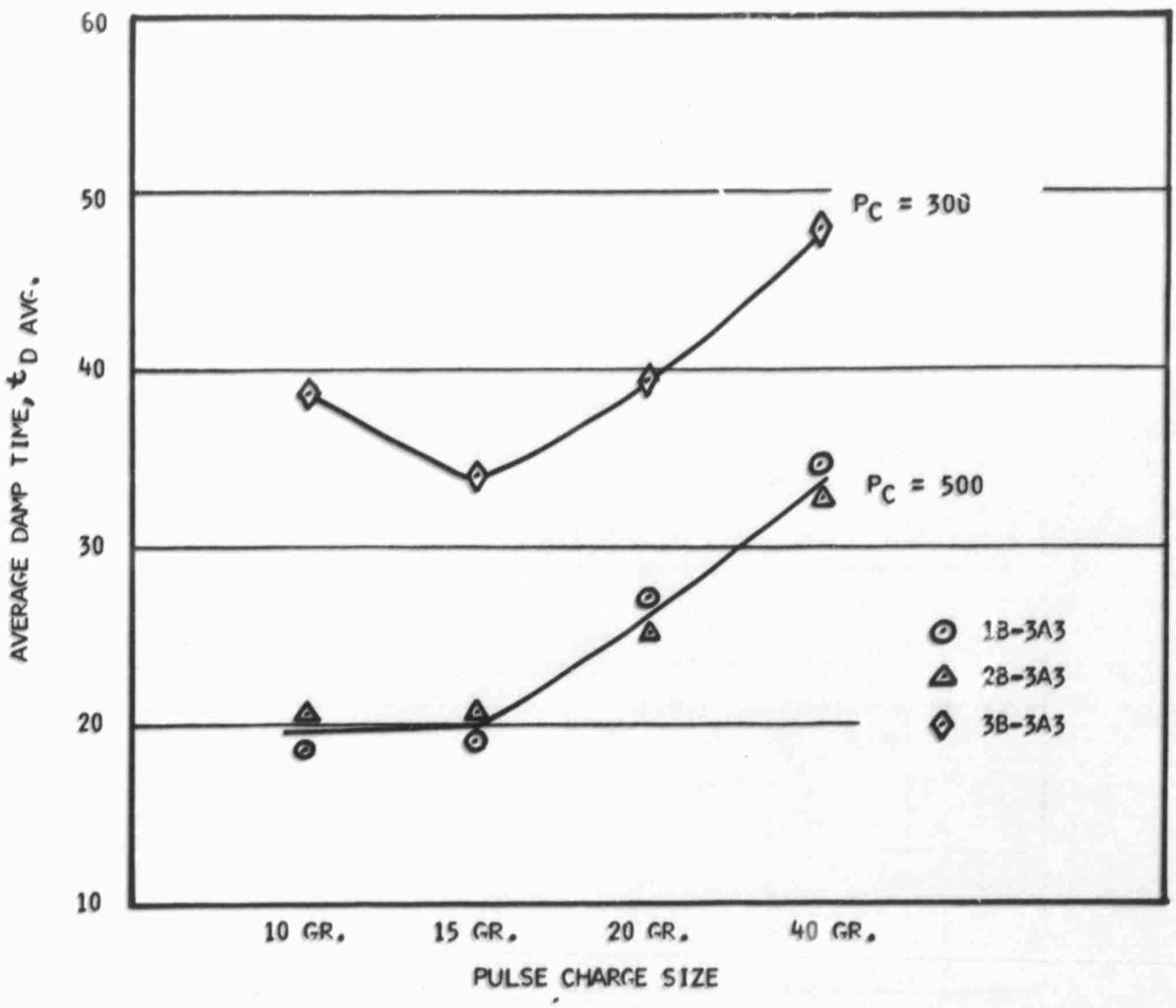

Figure 23. Influence of Chamber Pressure on Instability Damping Characteristics with 15.5% A_{14} Concentration

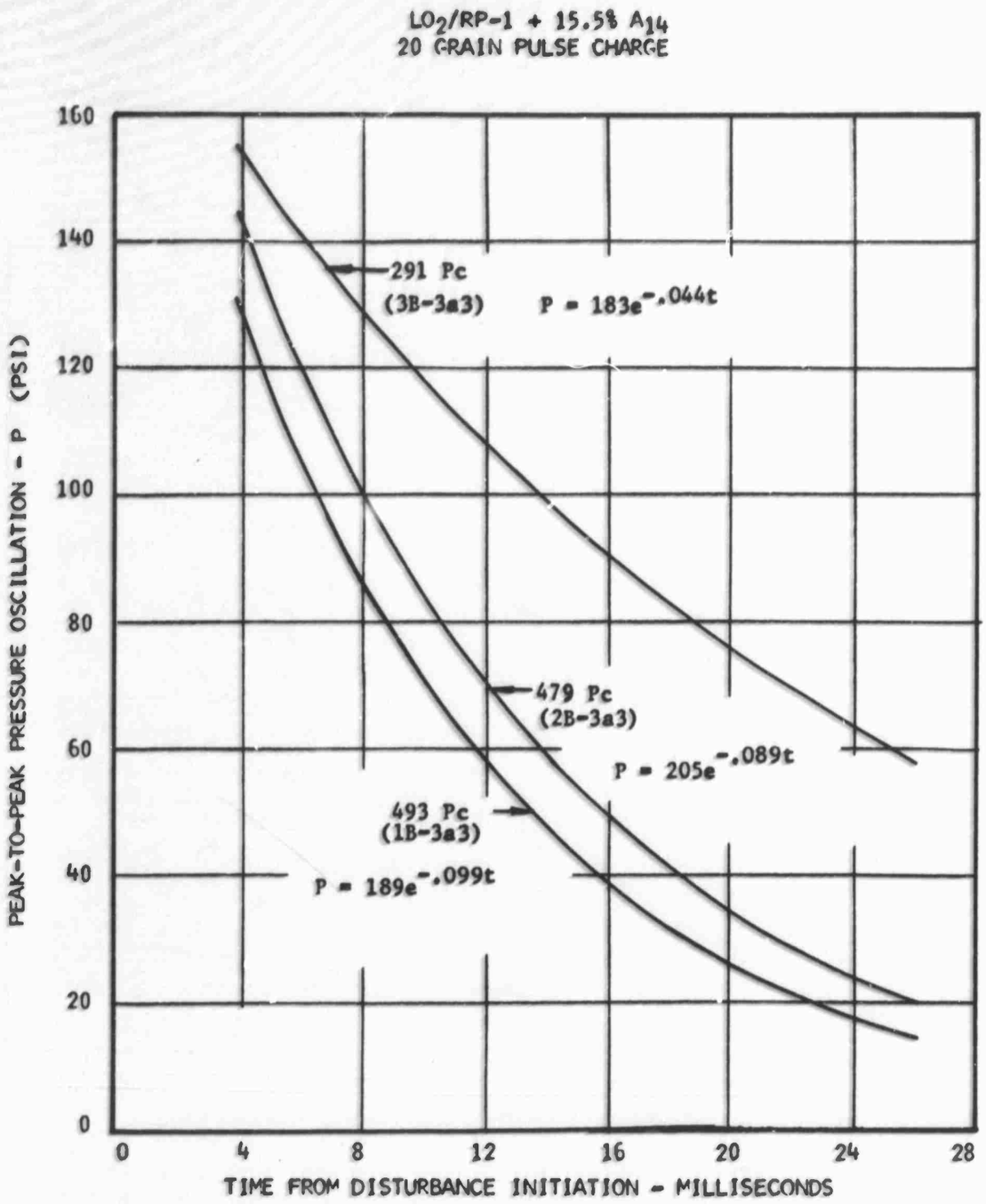

Figure 24. Effect of Chamber Pressure on Instability Damping Rate with 15.5% A_{14} Concentration

UNCLASSIFIED
Security Classification

DOCUMENT CONTROL DATA - R&D

(Security classification of title, body of abstract and indexing annotation must be entered when the overall report is classified)

1. ORIGINATING ACTIVITY *(Corporate author)*
Air Force Rocket Propulsion Laboratory
Edwards, California

2a. REPORT SECURITY CLASSIFICATION
Unclassified

2b GROUP

3. REPORT TITLE
Investigation of Hybaline A_{14} as a Combustion Instability Suppressant in a LO_2/RP-1 Combustion System

4. DESCRIPTIVE NOTES *(Type of report and inclusive dates)*

5. AUTHOR(S) *(Last name, first name, initial)*
Richard R. Weiss

6. REPORT DATE
June 1966

7a. TOTAL NO. OF PAGES
54

7b. NO. OF REFS
7

8a. CONTRACT OR GRANT NO.

b. PROJECT NO. 3058

c.

d.

9a. ORIGINATOR'S REPORT NUMBER(S)

9b. OTHER REPORT NO(S) *(Any other numbers that may be assigned this report)*

10. AVAILABILITY/LIMITATION NOTICES This document is subject to special export controls and each transmittal to foreign governments or foreign nationals may be made only with prior approval of AFRPL (RPPR-STINFO), Edwards, California 93523.

11. SUPPLEMENTARY NOTES

12. SPONSORING MILITARY ACTIVITY

13. ABSTRACT

An experimental investigation was performed on the use of Hybaline A_{14} as a combustion instability suppressant in a LO_2/RP-1 combustion system. A pulse motor combustion stability evaluation tool was used for the test program. Tests were conducted with three different concentrations of Hybaline A_{14} in RP-1. These concentrations were, by weight, 6.6%, 10.9%, and 15.5%. Tests were also conducted using RP-1 without additive which provided baseline data for comparative evaluation. A total of eighteen tests were conducted over a prescribed mixture ratio range of 2.0 to 3.0 and at two different chamber pressure levels, 300 and 500 psia.

A pulse gun stability rating device was used to artificially perturb the combustion process. Relative stability characteristics were compared by considering the combustion system response to induced pressure disturbances, size of disturbance required for instability, damping characteristics and resultant instability modes and oscillation amplitudes.

DD FORM 1 JAN 64 1473

UNCLASSIFIED
Security Classification

UNCLASSIFIED

Security Classification

14. KEY WORDS	LINK A ROLE	LINK A WT	LINK B ROLE	LINK B WT	LINK C ROLE	LINK C WT
Combustion Instability						
Suppressant						
Hybaline A_{14}						

INSTRUCTIONS

1. ORIGINATING ACTIVITY: Enter the name and address of the contractor, subcontractor, grantee, Department of Defense activity or other organization *(corporate author)* issuing the report.

2a. REPORT SECURITY CLASSIFICATION: Enter the overall security classification of the report. Indicate whether "Restricted Data" is included. Marking is to be in accordance with appropriate security regulations.

2b. GROUP: Automatic downgrading is specified in DoD Directive 5200.10 and Armed Forces Industrial Manual. Enter the group number. Also, when applicable, show that optional markings have been used for Group 3 and Group 4 as authorized.

3. REPORT TITLE: Enter the complete report title in all capital letters. Titles in all cases should be unclassified. If a meaningful title cannot be selected without classification, show title classification in all capitals in parenthesis immediately following the title.

4. DESCRIPTIVE NOTES: If appropriate, enter the type of report, e.g., interim, progress, summary, annual, or final. Give the inclusive dates when a specific reporting period is covered.

5. AUTHOR(S): Enter the name(s) of author(s) as shown on or in the report. Enter last name, first name, middle initial. If military, show rank and branch of service. The name of the principal author is an absolute minimum requirement.

6. REPORT DATE: Enter the date of the report as day, month, year; or month, year. If more than one date appears on the report, use date of publication.

7a. TOTAL NUMBER OF PAGES: The total page count should follow normal pagination procedures, i.e., enter the number of pages containing information.

7b. NUMBER OF REFERENCES: Enter the total number of references cited in the report.

8a. CONTRACT OR GRANT NUMBER: If appropriate, enter the applicable number of the contract or grant under which the report was written.

8b, 8c, & 8d. PROJECT NUMBER: Enter the appropriate military department identification, such as project number, subproject number, system numbers, task number, etc.

9a. ORIGINATOR'S REPORT NUMBER(S): Enter the official report number by which the document will be identified and controlled by the originating activity. This number must be unique to this report.

9b. OTHER REPORT NUMBER(S): If the report has been assigned any other report numbers *(either by the originator or by the sponsor)*, also enter this number(s).

10. AVAILABILITY/LIMITATION NOTICES: Enter any limitations on further dissemination of the report, other than those imposed by security classification, using standard statements such as:

(1) "Qualified requesters may obtain copies of this report from DDC."

(2) "Foreign announcement and dissemination of this report by DDC is not authorized."

(3) "U. S. Government agencies may obtain copies of this report directly from DDC. Other qualified DDC users shall request through _____."

(4) "U. S. military agencies may obtain copies of this report directly from DDC. Other qualified users shall request through _____."

(5) "All distribution of this report is controlled. Qualified DDC users shall request through _____."

If the report has been furnished to the Office of Technical Services, Department of Commerce, for sale to the public, indicate this fact and enter the price, if known.

11. SUPPLEMENTARY NOTES: Use for additional explanatory notes.

12. SPONSORING MILITARY ACTIVITY: Enter the name of the departmental project office or laboratory sponsoring *(paying for)* the research and development. Include address.

13. ABSTRACT: Enter an abstract giving a brief and factual summary of the document indicative of the report, even though it may also appear elsewhere in the body of the technical report. If additional space is required, a continuation sheet shall be attached.

It is highly desirable that the abstract of classified reports be unclassified. Each paragraph of the abstract shall end with an indication of the military security classification of the information in the paragraph, represented as *(TS)*, *(S)*, *(C)*, or *(U)*.

There is no limitation on the length of the abstract. However, the suggested length is from 150 to 225 words.

14. KEY WORDS: Key words are technically meaningful terms or short phrases that characterize a report and may be used as index entries for cataloging the report. Key words must be selected so that no security classification is required. Identifiers, such as equipment model designation, trade name, military project code name, geographic location, may be used as key words but will be followed by an indication of technical context. The assignment of links, rules, and weights is optional.

UNCLASSIFIED

Security Classification