801338

LATTICE DEFORMATION FEASIBILITY STUDY

James P. Coughlin and Raymond R. Tsukimura
Aerojet-General Corporation
Sacramento and San Ramon, California

Technical Report AFRPL-TR-66-309

October 1966

Special Handling Required

This document is subject to special export controls and each transmittal to a foreign government or a foreign national may be made only with prior approval of AFRPL (RPPR/STINFO)

Air Force Propulsion Laboratory
Research and Technology Division
Air Force Systems Command
Edwards Air Force Base, California

1032-81Q-2

NOTICE

When Government drawings, specifications, or other data are used for any purpose other than in connection with a definitely related Government procurement operation, the United States Government thereby incurs no responsibility nor any obligation whatsoever; and the fact that the Government may have formulated, furnished, or in any way supplied the said drawings, specifications, or other data, is not to be regarded by implication or otherwise as in any manner licensing the holder or any other person or corporation, or conveying any rights or permission to manufacture, use, or sell any patented invention that may in any way be related thereto.

UNCLASSIFIED

LATTICE DEFORMATION FEASIBILITY STUDY

James P. Coughlin and Raymond R. Tsukimura

Special Handling Required

This document is subject to special export controls and each transmittal to a foreign government or a foreign national may be made only with prior approval of AFRPL (RPPR/STINFO)

UNCLASSIFIED

FOREWORD

The work reported herein was sponsored by the Air Force Rocket Propulsion Laboratory, Research and Technology Division, Edwards Air Force Base, under Contract AF 04(611)-11548, Project No. 3148, Program Element No. 62405184. The program is monitored for the Air Force by Dr. Wm. J. Leahy, RPCS.

This report covers work performed during the second quarter of the program from 1 July 1966 through 30 September 1966. The investigations were performed by Aerojet-General Corporation personnel of the Propellant Research and Development Division, Sacramento, California, and the Engineering and Development Division, San Ramon, California. The principal investigators are Mr. J. P. Coughlin (of Sacramento), who is directly responsible for the Calorimetry and Analysis portions of the program and overall program manager, and Mr. R. R. Tsukimura(of San Ramon), who is in charge of the sample irradiation phase of the program. Determination of optical-crystalographic properties will be performed by Mr. J. L. McGurk of Sacramento and Dr. D. W. Bainbridge (also of Sacramento) will investigate the changes in sample lattice parameters by specialized X-ray techniques.

This report contains no classified information.

Publication of this report does not constitute Air Force approval of the report's findings or conclusions. It is published only for the exchange and stimulation of ideas.

Dr. Wm. J. Leahy/RPCS

ABSTRACT

During the last month of this quarter considerable difficulties were encountered with regard to final safety testing of the irradiation capsules. As a result of capsule failure in a modified thermal decomposition test, the AGN Reactor Safeguards Committee revoked its previously granted approval for radiation experiments in this program - which had been contingent upon successful completion of the thermal decomposition test.

Work on the program was temporarily suspended while the causes of this capsule failure and possible solutions to the problem were investigated. A program review was then held at AFRPL with the Air Force Project Officer, Dr. Wm. J. Leahy; R. R. Tsukimura of Aerojet-General Nucleonics, San Ramon; and Aerojet Project Engineer, J. P. Coughlin. A review of the difficulties was conducted and possible solutions were presented. After discussing the alternate solutions it was agreed that continuation of the program on the current basis with some limitation in scope, in order to remain within the original budget, would be desirable. The following points were agreed upon:

1. Since the original choices of maximum irradiation dosage and number of samples were somewhat arbitrary, the major objectives of the program can still be accomplished with a smaller total radiation dosage and fewer samples. In addition, the results of calorimetric measurements to date indicate that the desired precision of measurements can be achieved with smaller individual sample weights than those originally planned. Therefore the number of samples will be reduced from four to three, and the maximum radiation exposures will be reduced from 15 to 10 weeks. The NH_4ClO_4 sample sizes to be used will be decided as the result of additional safety testing and subsequent AEC approval.

2. Safety testing of the irradiation capsules will continue with ignition and thermal decomposition tests with various sample sizes of pure NH_4ClO_4 and mixtures of NH_4ClO_4 with JPN double base propellant. The purpose of these tests is to establish the exact temperature, pressure and sample size limitations of the irradiation capsules, and to draw up revised irradiation plans.

3. The results of these tests will then be presented to the Reactor Safeguards Committee and, if necessary, to the Atomic Energy Commission for approval of the revised irradiation plans.

4. Since there will probably be a considerable delay involved in awaiting AEC approval of the revised irradiation plans, a formal request for a three-month duration, no-cost, program extension will be submitted.

5. Efforts will be made to improve the heat transfer between the radiation capsules and the reactor pool, in order to reduce the sample centerline temperature (from the heat transfer analysis estimate of 108°C) and thus prevent possible annealing of radiation induced crystal defects.

In the calorimetry portion of the program, the first heat of solution measurements with unirradiated ammonium perchlorate samples resulted in poorer precision than originally expected. This defect was found to be due to an ineffective calorimeter stirrer - and was corrected by increasing the surface area of the stirrer blades. This revision resulted in better precision than originally expected and will now permit the use of significantly smaller individual samples while still retaining the original objective of $\pm$ 0.25 cal/g uncertainty interval.

TABLE OF CONTENTS

		Page No.
I.	INTRODUCTION	1
II.	PHASE I - SAMPLE IRRADIATION	2
	1. Introduction	2
	2. Pressure Vessel Design and Fabrication	2
	3. Estimated Sample Centerline Temperature	4
	4. Pressure Vessel Safety Testing	4
	5. Dosimetry	7
III.	PHASE II - CALORIMETRY AND ANALYSIS	8
	1. Introduction	8
	2. Calorimetry	8
	3. Analysis	9
IV.	REVISED PROGRAM PLAN	10
	1. Phase I - Sample Irradiation	10
	2. Phase II - Calorimetry and Analysis	11
APPENDIX		13

LIST OF FIGURES

Figure No.		Page No.
	(TEXT)	
1.	Pressure Vessel for NH_4ClO_4 Irradiation	3
2.	Temperature Profile of Irradiation Capsule	5
3.	Irradiation Capsule After Second Ignition Test	6
	(APPENDIX)	
1.	Pressure Vessel for NH_4ClO_4 Irradiation	17

LIST OF TABLES

Table No.		Page No.
	(TEXT)	
I	Fast Neutron Flux of AGNIR	7
II	Results of Heat of Solution Measurements to Date	9
	(APPENDIX)	
I	Results of Externally Heated Experiment	20
II	Tensile Strength of Type 6061-T6 Aluminum Alloy at Various Temperatures	21

ABBREVIATIONS AND SYMBOLS

AEC	Atomic Energy Commission
AGC	Aerojet-General Corporation
AGN	Aerojet-General Nucleonics, Engineering and Development Division of AGC, San Ramon, California
AGNIR	Aerojet-General Nucleonics Industrial Reactor
AP	Ammonium Perchlorate, NH_4ClO_4
"F" and "G" Rings	Positions in the AGNIR reactor pool in close proximity to the active core
R	Roentgen units of radiation
REON	Rocket Engine Operations - Nuclear; Division of AGC
Type 6061-T6	An aluminum alloy composition particularly well suited for this work, containing minimum amounts of alloying agents or impurities which are capable of forming long life radioactive isotopes in a high neutron source.

THIS PAGE IS BLANK

I

INTRODUCTION

The objective of this program is to determine the feasibility of increasing the energy content of solid materials by permanent non-equilibrium dislocations of lattice members.

The energy source chosen for this study is neutron irradiation and the material to be irradiated is ammonium perchlorate. Solution calorimetry will be utilized to determine the amount of energy storage.

The program is divided into two separate portions; with Phase I covering sample irradiation and Phase II covering calorimetry and analysis operations with the irradiated samples.

II

PHASE I - SAMPLE IRRADIATION

1. INTRODUCTION

The Phase I operation is being conducted at the San Ramon Plant (Aerojet-General Nucleonics). The principal tasks invoved are design and fabrication of pressure vessels, preparation and approval of the Hazards Analysis Report, and sample radiation and dosimetry.

2. PRESSURE VESSEL DESIGN AND FABRICATION

During irradiation the individual NH_4ClO_4 samples will be sealed in gas-tight aluminum pressure vessels which will permit passage of neutron radiation while retaining all gaseous decomposition products. The particular alloy to be used and the exact capsule design were chosen so as to minimize the hazard due to residual radiation of the container after exposure while at the same time imparting sufficient physical strength to retain all decomposition products in the event of complete sample decomposition.

The design utilizes 3/8" I.D. by 5/8" O.D. tubing of 6061-T6 aluminum allow, as shown in Figure 1. Included in the design are a 1/4" O.D. filling tube and a combination end cap and puncture seal device.

The hydrostatic testing of the pressure vessel welds and the 1/4 in. diameter tubing has been completed. The pressure vessel welds fractured at 21,500 psi which is less than the 25,500 psi burst pressure of the main pressure vessel body (5/8 in. diameter tubing). The 1/4 in. tube burst at 24,500 psi. The 21,500 psi value was used to calculate the working pressure of the pressure vessel.

Fabrication of the first pressure vessel was completed and various tests for pressure vessel integrity, including x-ray analysis of the welds were performed. The puncture seal valve is on order and the equipment for monitoring of the pressure vessel temperature during irradiation has been received.

The elongation of the secondary container to accommodate the radiolytic gas pressure caused by rupture of both primary pressure vessels has been completed. The modified secondary container also passed the hydrostatic test at 620 psi.

Four capsules were fabricated, two of which were used in safety tests and two of which were sent to Sacramento and loaded with NH_4ClO_4 samples for irradiation.

PRESSURE VESSEL FOR NH_4ClO_4 IRRADIATION

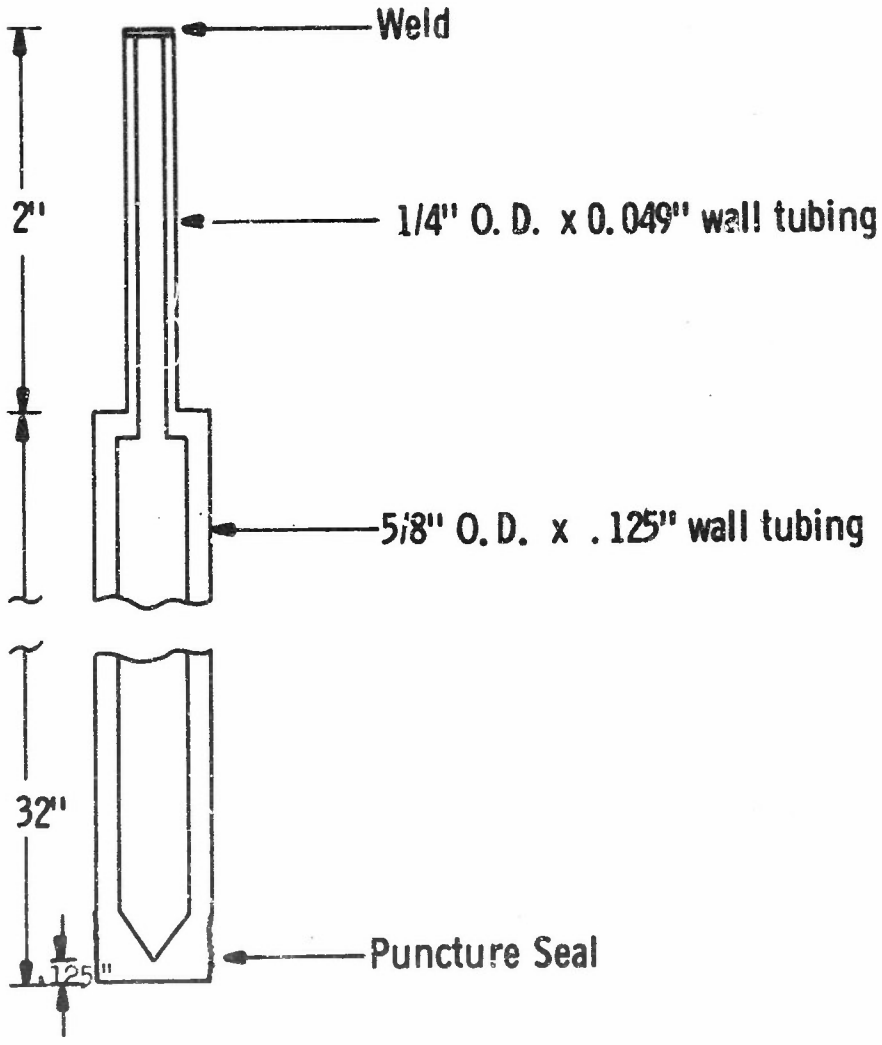

FIGURE 1

3. ESTIMATED SAMPLE CENTERLINE TEMPERATURE

A more detailed heat transfer analysis was conducted, taking into account the direct gamma heating of the ammonium perchlorate - and the associated temperature gradient within the sample - which were neglected in the original calculation.

The results of this calculation are summarized in Figure 2 which shows an estimated container wall temperature of 78.9°C and a sample centerline temperature of 107.8°C, based on an assumed reactor pool temperature of 110°F.

Actual temperature measurements during irradiation are expected to show that the above temperature estimates are conservative since the pool water temperature in normal operation is approximately 90°F.

4. PRESSURE VESSEL SAFETY TESTING

In reviewing the safety testing plans for the aluminum pressure vessel to be used in this work, it was the judgement of the Atomic Energy Commission Inspector that the planned thermal decomposition test at 200°C would not give adequate assurance that "no damage to reactor components could occur". His interpretation of the pertinent license agreement clause was that an actual ignition of the NH_4ClO_4 in a sealed irradiation capsule was needed. The key sentence of the Technical Specification Section of the ACE License Agreement (Revision 1, March 17, 1966) reads as follows: "Reactive materials shall not be irradiated without out-of-core ignition tests which shall verify that the encapsulation will insure that no damage to reactor components could occur". Therefore the planned test was modified to continue heating the sealed sample container (beyond 200°C) until the autoignition temperature of NH_4ClO_4 was reached.

The first three tests with actual or simulated pressure vessels resulted in explosive decomposition of the ammonium perchlorate and resultant capsule failure. In the first two tests, actual pressure vessels were used and the sample was heated <u>internally</u> with a temperature monitor mounted on the <u>outer</u> surface of the vessel (no internal temperature measurement). Based on a previous thermocouple calibration with an inert filler in place of the NH_4ClO_4 sample it appeared that the capsules had failed at an internal temperature of less than 200°C. The third test was performed with a simulated capsule made from the same aluminum tubing used in capsule fabrication, closed with steel Swagelok end caps and heated externally. In this test in which both the internal and external temperatures were monitored, the container failed, with an audible ignition, at an internal temperature of 311°C (external temperature = 317°C). The results of test number 2 are shown in Figure 3, a photograph of the ruptured capsule.

Failure of the capsules under the conditions of these tests was not surprising since the capsules were designed to withstand an internal pressure (due to slow radiolytic or thermal decomposition at 200°C) of about 4000 psia and hydrostatically tested to 8100 psia. The estimated pressure due to rapid ignition of a sample pre-heated to 311°C on the other hand is over 13,000 psia.

TEMPERATURE PROFILE OF IRRADIATION CAPSULE

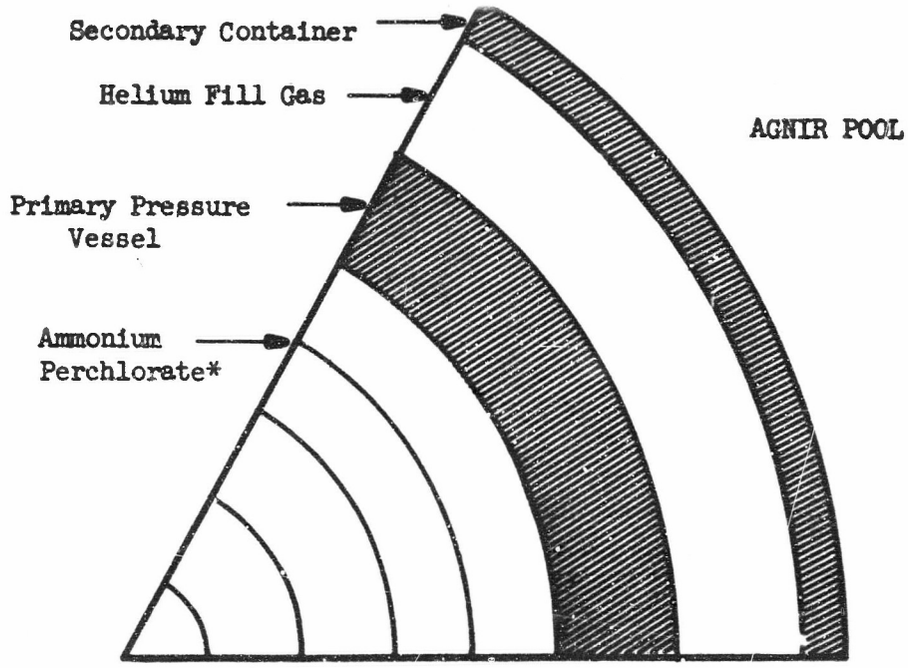

Δ T	°C	2.2	3.3	5.7	7.8	9.9	0.5	34.8	0.1	0
	°F	4	6	10.2	14.0	17.8	0.9	62.7	0.2	0
Total T	°C	107.8	105.6	102.3	96.6	88.8	78.9	78.4	43.6	43.5°C
	°F	225.8	221.8	215.8	205.6	191.6	173.8	172.9	110.2	110°F

*0.01 BTU/ft^2 - sec - °F

was used for the thermal conductivity value (K) for poured ammonium perchlorate

FIGURE 2

IRRADIATION CAPSULE AFTER SECOND IGNITION TEST

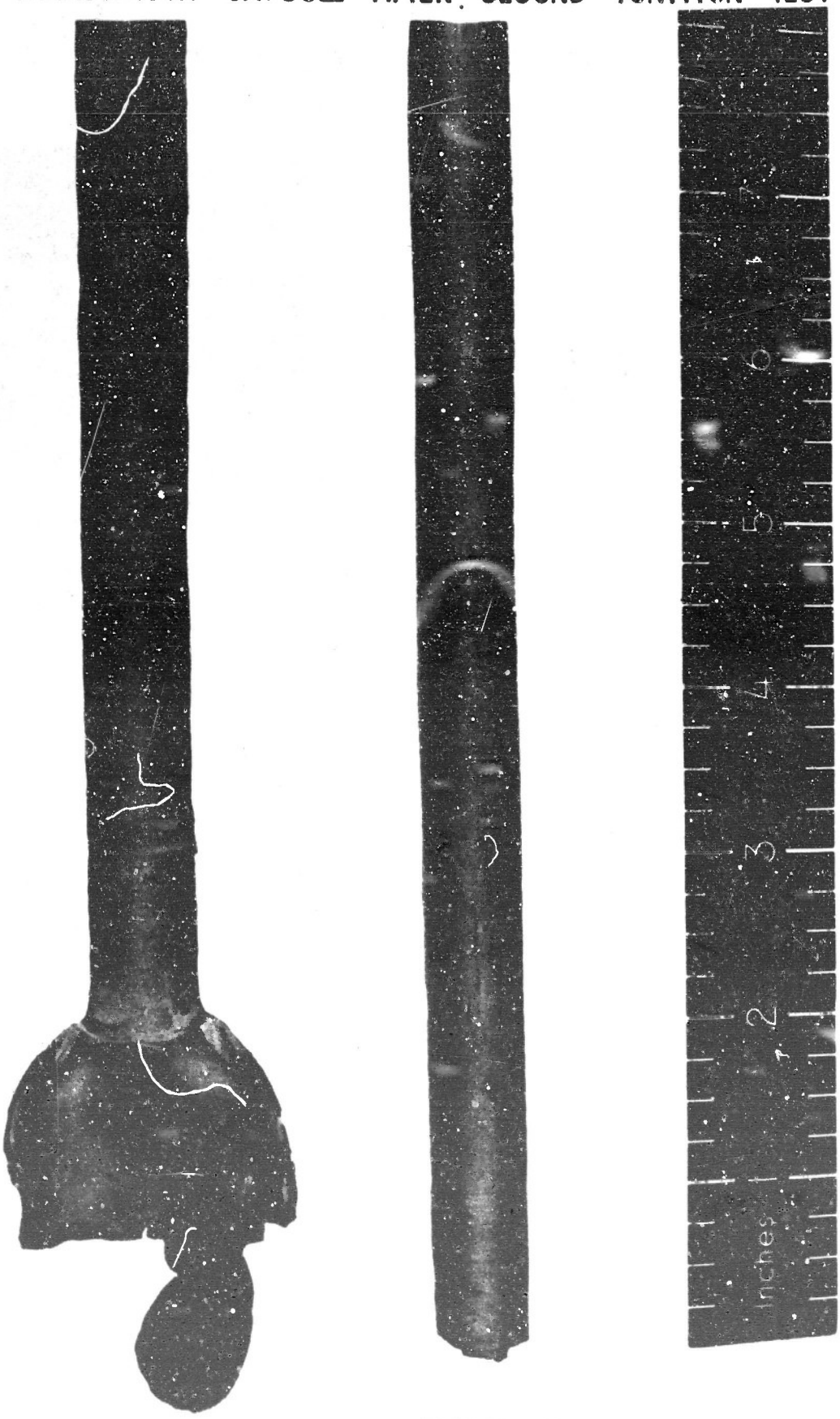

FIGURE 3

In addition the tensile strength of the alloy used in fabrication is drastically reduced at a wall temperature of 300°C, compared with corresponding values at 100° or 200°C.

When the results of the first three experiments were made known to the Reactor Safeguards Committee, they revoked their previously granted provisional approval.

Before suspending work on the program, two additional tests were performed in a simulated pressure vessel with ammonium perchlorate sample weights of two and five grams, respectively. The capsules remained intact and undamaged in these tests which were carried to maximum temperatures of 395° and 359°, respectively.

Further details and discussion of the tests are given in the Appendix.

All work on the program was then suspended pending discussions with the Air Force Program Manager regarding several possible alternatives for continuation and completion of the program. The results of this discussion are covered in Section IV.

5. DOSIMETRY

Sulfur foils were irradiated in AGNIR at a power level of 2KW to determine the fast neutron flux of the selected irradiation position (F-ring). The sulfur foils determine the neutron flux above 3 mev, the threshold energy of the Sulfur-32 (neutron, proton) Phosphorous-32 reaction. The neutron flux for neutrons with energies greater than 1 mev can be estimated using the Watt[1] or Nereson-Rosen[2] fission spectra. The results from the experiment and the estimated > 1 mev neutron flux for four positions near the centerline of the core are listed in Table I.

Table I

FAST NEUTRON FLUX OF AGNIR

Position (Inches above or below core centerline)	> 1 Mev (Neutron/cm²-sec)		> 3 Mev (Neutron/cm²-sec)	
	2 KW*	250 KW*	2 KW*	250 KW*
-5	4.7×10^{9}	5.9×10^{11}	1.43×10^{9}	1.6×10^{11}
-1	6.6×10^{9}	8.2×10^{11}	2.00×10^{9}	2.5×10^{11}
+1	6.9×10^{9}	8.7×10^{11}	2.11×10^{9}	2.6×10^{11}
+5	5.1×10^{9}	6.4×10^{11}	1.55×10^{9}	1.9×10^{11}

*Calculated values

[1] B. E. Watt, Phys. Rev., 87, 1037 (1962)
[2] L. Cranberg, C. Frye, N. Nereson, L. Rosen, Phys. Rev., 103, 662 (1956).

III

PHASE II - CALORIMETRY AND ANALYSIS

1. INTRODUCTION

Phase II of this program (being conducted at the Sacramento Plant) is devoted to determination of the changes in energy content, chemical analysis and physical properties brought about by irradiation of the sample. The principal tasks involved are: calorimetric determination of the energy content; chemical analysis of the irradiated sample, gaseous decomposition products and capsule corrosion products; X-ray studies and microscopic studies.

2. CALORIMETRY

The short in the resistance thermometer circuit was repaired by removing the outer protective copper sheath, rinsing the coils and inner connections with acetone, drying, reassembling and re-coating with Tygon paint.

The results of the first four heat of solution measurements with the unirradiated NH_4ClO_4 sample are shown in the upper portion of Table II. Although the average value of +68.21 cal/g or +8014 cal/mole is in substantial agreement with the latest NBS[1] value of +8000 cal/mole, the precision of the measurements was not as good as had been expected. Investigation disclosed that the poor precision was due to an ineffective calorimeter stirrer which resulted in long and variable equilibrium times and correspondingly large corrections for heat interchange with the thermostat bath. This defect was subsequently remedied by increasing the surface area of the propeller blades, as indicated by the results shown in the lower half of Table II.

Several more sample bulbs had been prepared for additional measurements this month; however, all work on the program was suspended following the September 21 Meeting of the Safety Committee.

On the basis of the first three measurements with the improved calorimeter stirrer it now appears that the desired precision uncertainty of $\pm$ 0.25 cal/g can be achieved with a sample size as low as 0.5 gram - if it becomes necessary to reduce the sample size to that extent.

---

[1] National Bureau of Standards Technical Note No. 270-1, Selected Values of Chemical Thermodynamic Properties, Part 1, Tables for the first 23 Elements in the Standard Order (Partial Revision of NBS Circular 500) Oct 1, 1965

Table II

RESULTS OF HEAT OF SOLUTION MEASUREMENTS TO DATE
(Last Three Runs are with Improved Stirrer)

Sample Wt. grams	Temp. °C	Heat of Solution cal/g	Equilibrium Time minutes	Stirrer Speed RPM
1.5731	29.70	+67.13	30	672
1.0103	30.27	+67.58	42	672
0.9976	30.27	+69.89	29	672
1.0088	30.16	+68.23	24	672
Average of 1st 4		+68.21	29	
1.5047	30.03	+68.17	24	672
1.5078	29.80	+57.97	14	845
1.5020	29.95	+67.97	12	845
Average of last 3		+68.04	17	

3. ANALYSIS

Optical microscopic studies of the crystals to be irradiated indicated that the sample to be used conforms to previously published literature data in all respects - thus establishing the basis for detection of minor changes induced by the radiation.

Individual large crystals were selected and aligned on the optical goniometer for the pre-irradiation X-ray studies. Detailed X-ray studies of these single crystals were then run for comparison with post-irradiation X-rays of the same samples.

IV

REVISED PROGRAM PLAN

The program cannot be continued in its present form without a considerable amount of additional testing (and associated expense) designed to satisfy the committee that no real hazard exists. Even after such additional tests are performed successfully, it now appears that approval to proceed cannot be given at the local level, but that specific AEC approval in the form of an Amended License Agreement must be obtained. Therefore, a meeting with the Air Force Program Manager was arranged to discuss various possibilities for continuing the program to a successful conclusion.

Several alternatives were discussed, all of which involved some program delay as well as probable increases in cost and possible reduction in the size of sample to be irradiated. Results of calorimetric measurements to date indicate that some reduction in sample size could be tolerated - while retaining all of the original program objectives.

It was agreed that the program be continued with some limitation in scope, in order to satisfy the major program objectives while remaining within the original program budget.

The major emphasis will be placed on the radiation and calorimetry. The number of samples will be reduced from four to three and the maximum radiation exposure will be reduced from 15 to 10 weeks. The NH_4ClO_4 sample sizes to be used will be decided as the result of additional safety testing and subsequent AEC approval.

Since there will probably be a considerable delay involved in awaiting AEC approval of the revised irradiation plans (after additional safety tests for the capsules), a three month duration, no cost, program extension (or a program stop order) is being requested.

1. PHASE I - SAMPLE IRRADIATION

Safety testing of the irradiation capsules will continue with ignition and thermal decomposition tests with various sample sizes of pure NH_4ClO_4 and mixtures of NH_4ClO_4 with JPN double base propellant. The purpose of these tests is to establish the exact temperature, pressure and sample size limitations of the irradiation capsules, and to draw up revised irradiation plans.

The results of these tests will then be presented to the Reactor Safeguards Committee and - if necessary - to the Atomic Energy Commission for approval of the revised irradiation plans.

All work on the program will be suspended during the period (estimated at 2 to 3 months) required for the AEC ruling.

2. PHASE II - CALORIMETRY AND ANALYSIS

Three additional heat of solution measurements will be made with 1.5 gram samples of unirradiated NH_4ClO_4 to complete the current series.

After a final decision is reached regarding the sample size for irradiation, it may be necessary to repeat the measurements of unirradiated AP with smaller sized samples consistent with the sample sizes of irradiated material.

Close contact with the Program Manager will be maintained in order to facilitate further program revisions which may be required.

THIS PAGE IS BLANK

APPENDIX

CURRENT STATUS OF "LATTICE DEFORMATION FEASIBILITY STUDY" PROGRAM

AF 04(611)-11548

Sept. 30, 1966

1. INTRODUCTION AND SUMMARY

On September 21, 1966, as a result of radiation capsule failure in a modified thermal decomposition test, the AGN Reactor Safeguards Committee revoked its previously granted approval for radiation experiments in this program - which had been contingent upon successful completion of the thermal decomposition test.

In reviewing the safety testing plans for the aluminum pressure vessel to be used in this work, it was the judgment of the AEC Inspector and the Reactor Supervisor that the planned thermal decomposition test at 200°C would not give adequate assurance that "no damage to reactor components could occur". In their judgment an actual ignition of the NH_4ClO_4 in a sealed irradiation capsule was needed to satisfy this requirement. The key sentence of the Technical Specification Section of the AEC License Agreement (Revision 1, March 17, 1966) reads as follows: "Reactive materials shall not be irradiated without out-of-core ignition tests which shall verify that the encapsulation will insure that no damage to reactor components could occur". Therefore the planned test was modified to continue heating the sealed sample container (beyond 200°C) until the autoignition temperature of NH_4ClO_4 was reached.

The first three tests with actual or simulated pressure vessels resulted in explosive decomposition of the ammonium perchlorate and resultant capsule failure (see Figure 3 of text). In the first two tests, actual pressure vessels were used and the sample was heated internally with a temperature monitor mounted on the outer surface of the vessel (no internal temperature measurement). Based on a previous thermocouple calibration with an inert filler in place of the NH_4ClO_4 sample it appeared that the capsules had failed at an internal temperature of less than 200°C. The third test was performed more carefully with a simulated capsule made from the same aluminum tubing used in capsule fabrication, closed with steel Swagelok end caps and heated externally. In this test in which both the internal and external temperatures were monitored, the container failed, with an audible ignition, at an internal temperature of 311°C (external temperature = 317°C).

Failure of the capsules under the conditions of these tests was not surprising since the capsules were designed to withstand an internal pressure (due to slow radiolytic or thermal decomposition at 200°C) of about 4000 psia and hydrostatically tested to 8100 psia. The estimated pressure due to rapid ignition of a sample pre-heated to 311°C on the other hand

is over 13,000 psia. In addition the tensile strength of the alloy used in fabrication is considerably reduced at a wall temperature of 300°C, compared with corresponding values at 100° or 200°C.

When the results of the first three experiments were made known to the Reactor Safeguards Committee, they revoked their previously granted provisional approval.

Before suspending work on the program two additional tests were performed in a simulated pressure vessel with ammonium perchlorate sample weights of two and five grams respectively. Both of these tests were successful.

Five alternative courses for completion of the program are discussed - all of which involve program delays and increased cost, and in some cases, decreased sample size. However, a decrease in sample size does not appear to be objectionable since the calorimetric work to date has shown better precision than expected and it now appears that the program objectives can be achieved with a smaller sample than originally planned.

2. PROGRAM ALTERNATIVES

The program cannot be continued in its present form without a considerable amount of additional testing designed to satisfy the committee that no real hazard exists. Even if such additional tests were performed successfully, the committee would now be reluctant to grant approval at the local level, and would probably insist upon obtaining specific AEC approval in the form of an Amended License Agreement.

Several alternatives are possible, all of which involve some program delay as well as probable increases in cost and possible reduction in the size of sample to be irradiated. Results of calorimetric measurements to date indicate that some reduction in sample size could be tolerated - while retaining all of the original program objectives.

Five possible program modifications are outlined below. The first three involve modified program with the irradiation to be carried out at AGN while the last two approaches involve subcontracting of the irradiation phase of the work to the General Electric - Vallecitos Facility.

a. Irradiation of Reduced Size AP Sample in the Same Portion of the AGN Reactor with Original Capsule Design

Additional effort involved in this approach will involve (1) fabrication and testing of additional capsules with reduced loads -

in both room temperature and elevated temperature ignition tests, (2) writing and submission of an application for amendment of the AEC License Agreement, and (3) possibly some additional calorimetry work to establish new limits of precision with unirradiated AP in smaller sample sizes.

If a suitable ambient temperature ignition test can be devised (involving either pure AP or an equivalent mixture of AP and an ignition aid such as JPN) it may be possible to qualify the present capsule design for the full 10-gram loading. However, at the present time it appears that the permissible sample loading will be in the range of 4 to 8 grams.

b. Irradiation of 10-Gram AP Samples with a Heavier Wall Capsule in the Same Portion of the AGN Reactor

Additional effort involved in this approach will involve (1) design, fabrication and testing of heavier-wall capsules (2) amending the AEC License Agreement and (3) irradiation and Calorimetry as originally planned.

c. Irradiation of 10-Gram AP Samples with Capsules of Larger Outside Diameter and Heavier Wall in an Increased Flux Region of the AGN Reactor

This approach involves (1) design, fabrication and testing of special capsules of larger outside diameter and heavy wall, (2) amendment of the AEC License Agreement, (3) irradiation at a flux rate of approximately three times the originally planned rate for 1/3 the total time, (4) calorimetry as originally planned.

d. Irradiation of 4- to 5-Gram Samples of NH_4ClO_4 in the GE Reactor with REON Designed and Qualified Capsules; Two Capsules Per Exposure

This approach involves irradiation in the Z-Trail Cable area of the GE reactor at flux levels 10 times higher than originally planned. The REON designed capsules have been fully qualified for use with 1.8 grams of high explosive in detonation tests with 3.6-gram (and larger) quantities of high explosive. The official price quotation from GE will specify the sample size limit for irradiation of AP - as determined by the GE Reactor Safety Committee. This judgment is within their area of jurisdiction since GE is already licensed to irradiate high explosives. The ROM cost estimate is based on irradiation of two capsules at each planned exposure level, thus making available from 8 to 10 grams of irradiated sample.

e. Irradiation of 4- to 5-Gram Samples in the GE Reactor with REON Designed and Qualified Capsules; One Capsule Per Exposure

In order to remain as close as possible to the original program budget, it may be possible to perform the analytical and calorimetric measurements within the desired limits of accuracy - with 4 to 5 grams of sample from each exposure level. This would then permit the use of one capsule for each exposure level and reduce the cost of irradiation by about 40%.

3. EXPERIMENTAL DETAILS

a. Summary

The Technical Specifications (Revision 1, 17 March 1966) for AGNIR require that out-of-core ignition tests must be performed before reactive materials can be irradiated in AGNIR. This test is performed to "verify that the encapsulation will ensure that no damage to reactor components could occur". To comply with this stipulation, a total of five ignition tests have been performed with ammonium perchlorate (NH_4ClO_4). In the first two tests, hot filament heaters were sealed into the pressure vessel. A tape-type heater was used to heat the pressure vessel from the outer surface in the last three tests. These tests verify the fact that NH_4ClO_4 can indeed be ignited if the temperature is sufficiently high. They also verify that the encapsulation for the NH_4ClO_4 irradiation experiments discussed in the hazards analysis does ensure, within the anticipated experimental limits, that no damage will occur to reactor components.

b. Experimental Methods

Two experimental approaches were used for the ignition tests - internal heating and external heating. The heating rates, in all cases, were calculated to represent the heating rate caused by reactor radiation ($\sim 3 \times 10^7$ Rads/hr) in the irradiation position (F ring). This rate is $\sim 5°C/min$.

(1) Pressure Vessel

The aluminum pressure vessels designed for this program were used for the internally-heated experiment (see Figure 1). They were hydrostatically tested to 8100 psig. A simulated vessel consisting of a 30 in. section of the same 5/8" O.D. Type 6061-T6 aluminum tube, used for the pressure vessels with stainless steel Swagelok caps was used as the container for the externally-heated tests (since no more spare pressure vessels were available at this time). This type of container had been previously tested to 24,000 psig before tube rupture occurred. A Heise gauge capable of measuring pressure to 4000 psig was used for pressure measurements. An atmosphere of helium was added to each vessel to simulate the proposed experimental conditions.

(2) Heaters

Three types of heaters were used for the experiments. A heater which was fabricated from nichrome wire (0.10 in. dia) and copper leads (0.013 in. dia) and encased in ceramic insulation was used for the first of the internally-heated experiments. A chromel-alumel thermocouple, sheathed in stainless steel, was used for the second internally-heated experiment. These heaters were calibrated for heating rate by heating a 5/8" O.D. aluminum tube containing sodium chloride and measuring the centerline and external temperatures. During the ignition test, only the external temperature was recorded, the

PRESSURE VESSEL FOR NH_4ClO_4 IRRADIATION

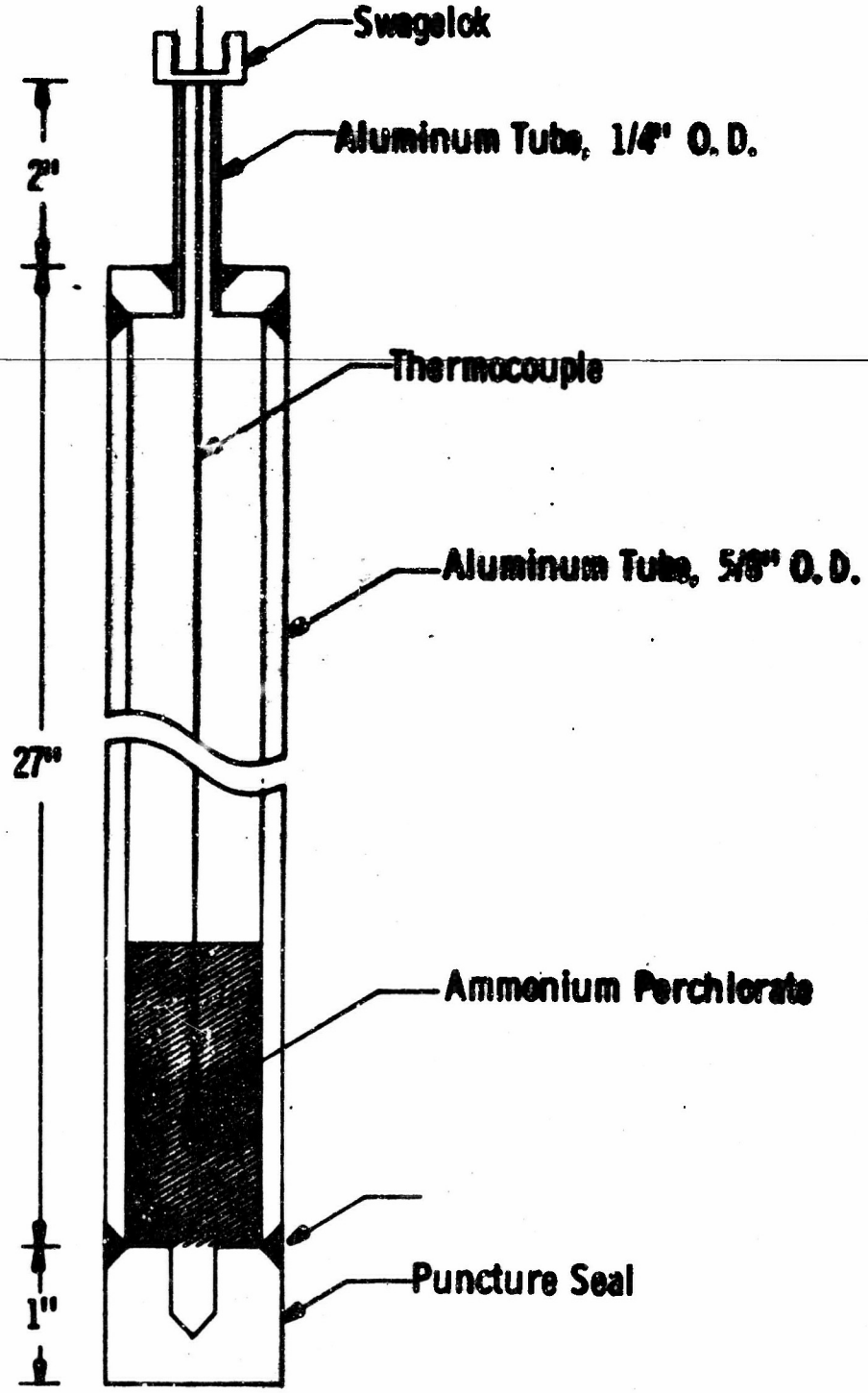

APPENDIX - Figure 1

centerline temperature being estimated from the calibration data. The power supply used was an AB Electro Polisher Power Source, Cat. No. 1715-1, made by Buehler, Ltd., Chromel-Alumel thermocouples and Millivolt Potentiometers, Cat. No. 8686 made by Leeds and Northrup, were used for temperature measurements.

For the externally-heated experiments, a heating tape with variac power supply was used. The internal temperature was monitored with a copper constantan thermocouple; the external temperature with an iron-constantan thermocouple. The Leeds and Northrup potentiometers were used for thermocouple readout.

c. Results

The first three ignition tests, each conducted with 10-gram samples of AP, resulted in pressure vessel failure of one form or another. In two additional tests, using reduced AP sample sizes (2 and 5 grams, respectively) the pressure vessel remained intact at maximum temperatures of 396°C and 359°C respectively.

The first internally-heated test, using the nichrome heater, was terminated at 96° external temperature (apparent internal temperature of 180°C) when the 1/4" O.D. tube separated from the main body of the pressure vessel, at the weld, with a loud report. The tube was also severed at the Swagelok connector and was not found after the experiment. The measured pressure was 4 psig just before the failure of the container.

The second internally-heated experiment (using a sheathed heater) was abruptly terminated when the puncture seal left the main body of the pressure vessel. Further pressure vessel damage occurred in the form of 1.5 in. axial split with subsequent opening of the tube in the radial direction. This rupture occurred at 124°C external temperature corresponding to an apparent internal temperature of ~ 170°C. A noticeable pressure reading was obtained at ~ 76°C and increased to 76 psig just before the pressure vessel rupture.

The first externally heated experiment also ended in an audible fashion when a brass reducing-coupling gave way. This failure occurred at a measured internal temperature of 311°C and an external temperature of 317°C (see Table I). The pressure reading was 40 psig just before the failure and rose to > 4,000 psig.

The results from the ignition tests verify the fact that when any reactive compound is heated high enough, the compound will decompose rapidly or deflagrate.

The apparent temperatures at which failure occurred in the internally heated experiments are disturbingly low. This phenomena may be attributed to hot spots such as the nichrome-copper junction and the fact that the thermocouple heater was glowing red when the measured temperature in NaCl was only 300°C. Under these conditions exothermic decomposition of the

NH_4ClO_4 undoubtedly occurred and the externally measured temperature could be of no value in determining the actual AP sample temperature. For this reason the third test was run using an external heater with thermocouples mounted both inside and outside.

The fact that pressure vessel failures were not detonations (no shrapnel) but deflagrations is rather encouraging. The results from the externally heated capsule show that at 150°C, the experiment scram temperature, there is no pressure rise. Significant decomposition (or pressure rise) did not occur until 295°C. Therefore, the ignition test has shown that the capsule can contain the reactive material at both the operating temperature (105°C) and the automatic scram temperature (150°C).

4. DISCUSSION OF TESTS

The pressure generated within the irradiation capsule by the decomposition of NH_4ClO_4 can be estimated from the decomposition reaction,

$$NH_4ClO_4 \rightarrow 1/2\ N_2(g) + 3/2\ H_2O(g) + HCl(g) + 5/4\ O_2(g),$$

which evolves a heat of 38.07 Kcal, and generates 4.25 moles of gas, per mole of NH_4ClO_4. Assuming the perfect gas law, the corresponding equilibrium pressure in atmospheres is,

$$P = \frac{W}{117.497} \times 4.25 \times \frac{22,412}{V} \times \frac{T}{273} = 2.969\ T \times \frac{W}{V}$$

where T is the temperature in degrees Kelvin, W is the sample weight in grams and V is the capsule volume in cubic centimeters.

In a slow decomposition reaction (thermal or radiolytic) the process may be considered as <u>isothermal</u> with the effective temperature being that of the pressure vessel. Under these conditions the pressure corresponding to complete decomposition of 10 grams of NH_4ClO_4 in a container of 54.3 cc internal volume at a capsule temperature of 105°C (the assumed operating conditions) is 206.7 atmospheres or 3038 psia. At the reactor scram temperature of 150°C, the corresponding pressure is 3400 psia, while at the originally planned thermal decomposition test temperature of 200°C, the corresponding pressure is 3802 psia.

Since the pressure vessels had been hydrostatically tested to 8100 psia and there is no literature evidence of NH_4ClO_4 auto-ignition below the orthorhombic to cubic phase transition temperature of 242°C - the capsules were expected to pass the 200°C thermal decomposition test.

However, when ammonium perchlorate is heated to the auto-ignition temperature, the situation is entirely different. In this situation <u>adiabatic</u>

Table I

RESULTS OF EXTERNALLY-HEATED EXPERIMENT
(Test No. 3)

Temperature Inside (°C)	Outside (°C)	ΔT (°C)	Heating Rate °C/min	Pressure (psig)
21	24	3	-	0
23	28	5	2	0
38	47	9	4	0
61	72	11	5	0
88	99	11	5	0
113	124	11	5	0
132	143	11	4	0
150	162	12	4	0
178	192	14	6	2
208	217	9	5	2
218	228	10	4	2
225	237	12	5	2
233	243	10	8	2
236	249	13	6	2
238	252	14	3	2
241	257	16	5	2
246	261	15	4	2
252	266	14	5	2
259	271	12	5	2
264	275	11	4	2
276	286	10	5	2
280	295	15	5	6
289	299	10	4	12
297	304	7	5	17
301	309	8	5	25
306	313	7	4	32
311	317	6	4	40

conditions may be assumed and the heat of reaction of 38.07 Kcal/mole corresponds to a temperature rise of 1066°C. If 10 grams of NH_4ClO_4 were ignited at an initial temperature of 298°K in the capsule of 54.3 cc volume, the corresponding adiabatic flame temperature and pressure would be 1364°K and 10,962 psia respectively. Under conditions corresponding to Test #3, with the sample and container preheated to 311°C at the time of ignition, the corresponding temperature and pressure are 1650°K and 13,261 psia, respectively.

In addition to the pressure generated in the ignition, the tensile strength of the aluminum alloy is considerably reduced at the temperature corresponding to auto-ignition. Table II lists literature values of tensile strength as a function of temperature for the alloy used and shows that at 315°C the tensile strength is only 10% of that at 24°C.

The loss in tensile strength with temperature was the chief reason for conducting the first two pages with an internal heater - to keep the capsule temperature below that of the AP and thus retain as much capsule strength as possible. However, direct contact of the heater wire with the AP led directly to auto-ignition and capsule failure.

In view of the data discussed above, it is not surprising that the capsules failed in the auto-ignition test.

It should be possible, however, to devise a less severe test - more closely resembling actual conditions in the reactor - as a qualification for the capsules. Room temperature ignition of NH_4ClO_4 should be an acceptable test; however, it may not be possible to ignite pure AP without an ignition aid of some sort. Ignition of an energetically equivalent mixture of AP and an ignition aid such as JPN double base propellant should provide a suitable test.

TABLE II

TENSILE STRENGTH OF TYPE 6061-T6 ALUMINUM ALLOY AT VARIOUS TEMPERATURES

Temperature, °C	Tensile Strength, lb/sq. in.
24	45,000
100	42,000
149	34,000
205	19,000
260	7,500
315	4,500
370	3,000

5. STATUS OF CALORIMETRY

Since the last monthly report, the calorimeter stirrer has been improved by increasing the surface area of the blades - resulting in more rapid attainment of equilibrium and greatly improved precision. Table III (of the text) shows the results of the four measurements made before and three measurements made after the stirrer modification. Several more sample bulbs had been prepared for additional measurements this month; however, all work on the program was suspended following the September 21 meeting of the Safety Committee.

On the basis of the first three measurements with the improved calorimeter stirrer it now appears that the desired precision uncertainty of $\pm$ 0.25 cal/g could be achieved with a sample size as low as 0.5 gram - if it becomes necessary to reduce the sample size for irradiation.