UNCLASSIFIED

AD NUMBER
AD801271
LIMITATION CHANGES
TO: **Approved for public release; distribution is unlimited.**
FROM: **Distribution authorized to U.S. Gov't. agencies and their contractors; Critical Technology; OCT 1966. Other requests shall be referred to Air Force Armament Laboratory, ATTN: ATCC, Eglin AFB, FL 32542. This document contains export-controlled technical data.**
AUTHORITY
AFATL ltr dtd 1 Aug 1977

THIS PAGE IS UNCLASSIFIED

AFATL-TR-66-99

80127

Development of Hermetic Shipping and Storage Container CNU-89/E23

by

Leland L. Krauss

Container Research Corporation

OCTOBER 1966

This document is subject to special export controls and each transmittal to foreign governments or foreign nationals may be made only with prior approval of the Air Force Armament Laboratory (ATCC), Eglin Air Force Base, Florida.

AIR FORCE ARMAMENT LABORATORY

RESEARCH AND TECHNOLOGY DIVISION

AIR FORCE SYSTEMS COMMAND

EGLIN AIR FORCE BASE, FLORIDA

DEVELOPMENT OF HERMETIC SHIPPING

AND

STORAGE CONTAINER CNU-89/E23

LELAND L. KRAUSS

CONTAINER RESEARCH CORPORATION

This document is subject to special export controls and each transmittal to foreign governments or foreign nationals may be made only with prior approval of the Air Force Armament Laboratory (ATCC), Eglin Air Force Base, Florida.

FOREWORD

The research and development contract covered by this technical report was awarded under United States Air Force Project No. P672833 to develop a hermetically sealed shipping and storage container for the TMU-28/B Chemical Spray Tank. The contract was awarded to the Container Research Corporation (CRC), Hollow Road, Glen Riddle, Pennsylvania 19037, under Contract No. AF#08 (635)-5341. The contract was awarded on June 29, 1965 and was completed on February 21, 1966.

The Air Force program monitor was Major R. B. Enzian/ATCC of Eglin AFB, Florida 32542.

Information in this report is embargoed under the Department of State International Traffic In Arms Regulations. This report may be released to foreign governments by departments or agencies of the U. S. Government subject to approval of the Air Force Armament Laboratory (ATCC), Eglin AFB, Florida, or higher authority within the Department of the Air Force. Private individuals or firms require a Department of State export license.

This document has been reviewed and is approved.

NICHOLAS H. COX, Colonel, USAF
Chief, Bio-Chemical Division

ABSTRACT

A hermetic shipping container has been developed for TMU-28/B Chemical Spray Tank for its protection during handling, transit, and storage, and for preventing the accidental escape of any of the chemical to the atmosphere. This all-aluminum container consists of a longitudinally split cylindrical shell, exterior stiffeners and handling appendages, interior desiccant and chemical absorption chamber, breather valves, and a self-damping elastomeric shock absorbing load suspension system.

The container has undergone and passed extensive testing. Its acceptance and deployment is recommended.

This document is subject to special export controls and each transmittal to foreign governments or foreign nationals may be made only with prior approval of the Air Force Armament Laboratory (ATCC), Eglin AFB, Florida.

BLANK PAGE

TABLE OF CONTENTS

Section		Page
I.	INTRODUCTION	1
II.	TECHNICAL DISCUSSION	3
	1. DESCRIPTION OF CONTAINER COMPONENTS	3
	a. Container Shell	3
	b. Suspension System	4
	c. Nozzle Assembly Bracket	6
	d. Sway Brace Clamp	6
	e. Actuator Bracket	6
	f. Breather Assembly	6
	g. Explosive Cutter Storage Box	6
	2. DESIGN AND DEVELOPMENT OF MAJOR COMPONENTS	10
	a. Suspension System	10
	b. Container Shell	12
	c. Breather Assembly	12
	3. HERMETIC SHIPPING AND STORAGE CONTAINER LOADING AND UNLOADING SEQUENCE	13
III.	TEST DESCRIPTION	15
IV.	CONCLUSIONS AND RECOMMENDATIONS	17
	APPENDIX - HERMETIC SHIPPING AND STORAGE CONTAINER TEST PROGRAM	19

LIST OF ILLUSTRATIONS

Figure No.		Page
1	CNU-89/E23 Hermetic Shipping and Storage Container	1
2	Container Suspension System	5
3	Nozzle Storage Bracket	7
4	Breather Assembly	8
5	Explosive Cutter Storage Box	9
6	Suspension Lug Bar and Yoke Assembly .	11
A - 1	Deflection Indicator Location Diagram	31
A - 2	Accelerometer Location Diagram	33
A - 3	Rollover Test	34
A - 4	Edgewise Rotational Drop Test	34
A - 5	Cornerwise Rotational Drop Test . . .	34
A - 6	Pendulum Impact Test	35
A - 7	Static Loading Test	35
A - 8	Single Point Lifting Test	36
A - 9	Forklift Truck Lifting Test	36
A - 10	Oscilloscope Trace - Test No. 1 . . .	37
A - 11	Oscilloscope Trace - Test No. 2 . . .	37
A - 12	Oscilloscope Trace - Test No. 3 . . .	38
A - 13	Oscilloscope Trace - Test No. 4 . . .	38
A - 14	Oscilloscope Trace - Test No. 5 . . .	39
A - 15	Oscilloscope Trace - Test No. 6 . . .	39

LIST OF ILLUSTRATIONS (Continued)

Figure No.		Page
A - 16	Oscilloscope Trace - Test No. 7	40
A - 17	Oscilloscope Trace - Test No. 8	40
A - 18	Oscilloscope Trace - Test No. 9	41
A - 19	Oscilloscope Trace - Tests No. 10 & 11.	41
A - 20	Oscilloscope Trace - Test No. 12 . . .	42

LIST OF TABLES

Table No.		Page
I	Container Test Program Deflection Indicator Results	30
II	Container Test Program Instrumentation Results	32

SECTION I

INTRODUCTION

The objective of the work performed under this contract, AF 08(635)5341, was to design, manufacture, and test two hermetic shipping and storage containers for the protection of the TMU 28/B Chemical Spray Tank during handling, transit, and storage, with means of preventing any of the spray tank's contents from accidentally escaping from the container to the surrounding environment, and means for the external storage of explosive tank cutters. The resultant container, designated CNU-89/E23, is shown in Figure 1.

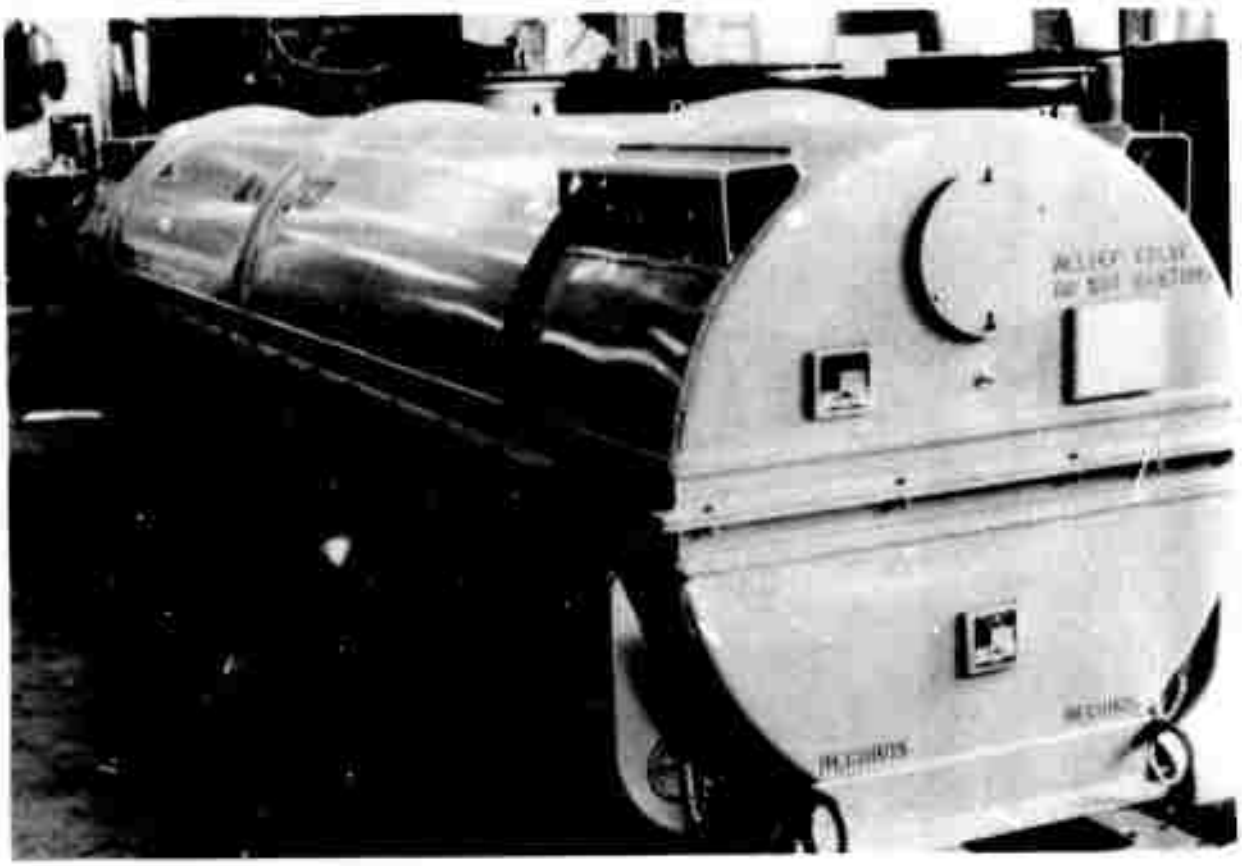

Figure 1 CNU-89/E23 Hermetic Shipping and Storage Container

The reverse of this page is blank)

SECTION II

TECHNICAL DISCUSSION

1. DESCRIPTION OF CONTAINER COMPONENTS

The CNU-89/E23 Shipping and Storage Container is a hermetically sealed container which will protect the TMU-28/B Chemical Spray Tank during handling, transit, and storage, and which will effectively filter any agent which may leak from the spray tank.

The container consists of four main components and three bracket assemblies which are described and pictured. The container overall dimensions are 204 inches long, 43 3/8 inches wide and 45 1/2 inches high. It has a net weight of 950 pounds.

a. Container Shell

The container shell is an all-aluminum fabricated structure which is described below and is shown in Figure 1 assembled and ready for shipment.

The container shell consists of an extruded 6063-T5 aluminum sealing flange containing an O-ring type neoprene gasket that provides the seal between the shell sections. The container skin is 6061-T6 aluminum sheet rolled to form the cylindrical shape of the container with an internal volume of 142 cubic feet. The end domes are of the same material as are the rollover angles, skid angles, and side stiffeners. The stacking brackets are of extruded 6063-T5 aluminum. They permit containers to be stacked five high by providing surfaces for skids to sit on and interlock which restricts lateral and longitudinal movement of the upper containers.

Handling provisions are incorporated in the container shell structure. Lifting eyes are incorporated in the stacking brackets for four point suspension of the container with its axis parallel to ground level. Towing eyes are incorporated in the ends of the skid angles to permit towing of the container on its skids on level ground. Forklift channels are provided so the container may be lifted from the side by forklift trucks without permanent deformation of the container skin. Also incorporated are tipover channels which restrict the container from rolling off forklift prongs due to a sudden stop by the forklift truck while being transported. Hardwood skids are located on the bottom of the container providing a 4 inch minimum clearance between ground level and container bottom plane. The skids run parallel to the longitudinal axis of the container.

Service facilities, nameplates, and data plate are all located on one end of the container hereafter called the nameplate end. Two cylindrical record receptacles are located in the side stiffeners on the nameplate end of the container for waterproof and tamperproof storage of records. A desiccant holder is located in the upper section on the nameplate end and is accessible from the inside and through an opening in the container surface. A drain plug is located on the underside of the container on the nameplate end to allow drainage of the interior while in the upright position. An air filling valve is also located on the nameplate end for pressurization.

Closure of the container half sections is accomplished at the sealing flange by means of 44 bolts. Opening and closure of the container can be accomplished with common hand tools.

b. Suspension System

The suspension system is of a saddle type interfacing with the spray tank and supporting it from the tanks suspension lugs. The suspension system consists of a cast 40 E aluminum dual yoke, four cast 40 E aluminum spreader brackets, and two 6061-T6 aluminum angles which tie the castings together. The frame assembly is supported from these angles within the container by six extreme temperature range resilient silicone rubber sandwich type shock mounts. Two 1 inch square 4130 steel locking bars slide through the tank suspension lugs and into the dual yoke supporting it.

The suspension system mounted within a container with a spray tank installed is shown in Figure 2.

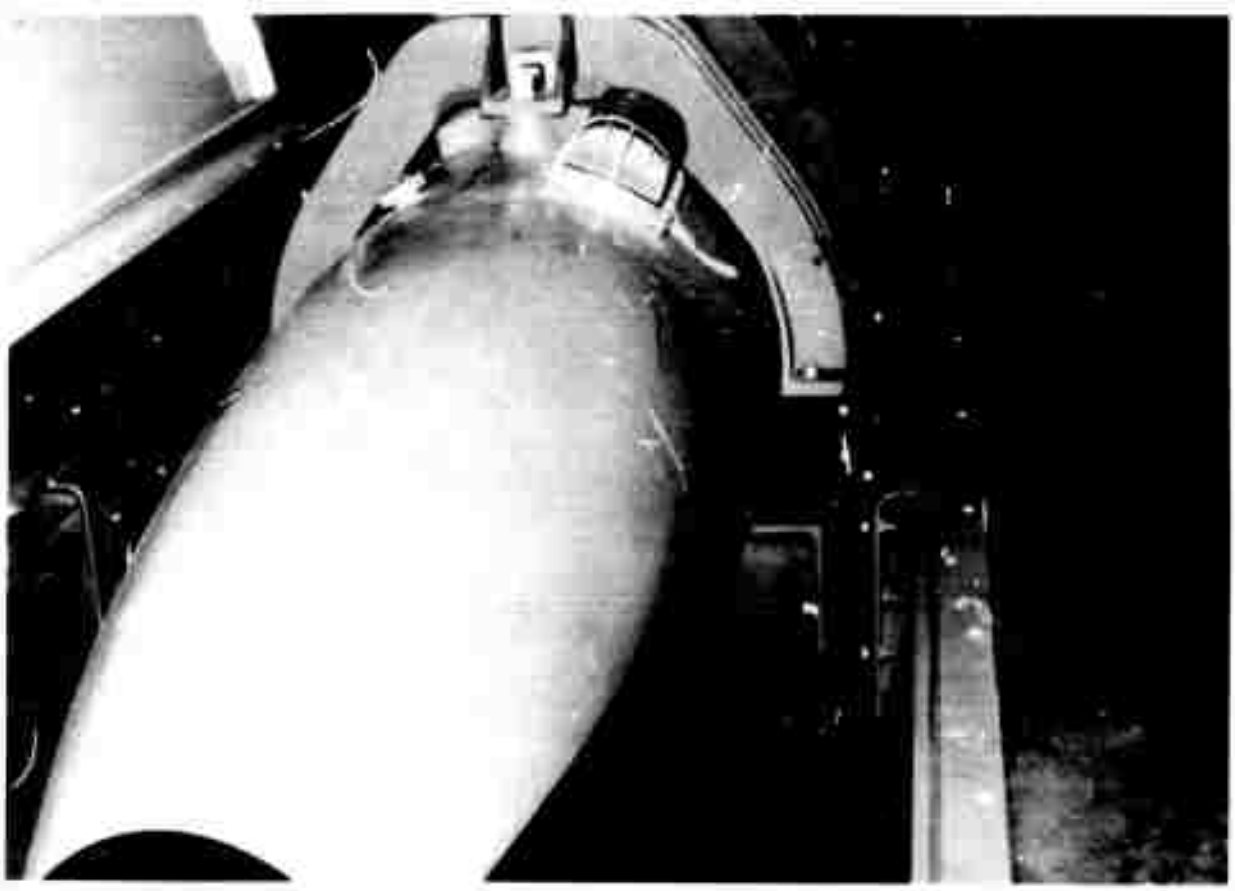

Figure 2 Suspension System

c. Nozzle Assembly Bracket

The nozzle bracket clamps the tank nozzle to the interior of the container. It consists of four 6061-T6 aluminum strips formed to the contour of the nozzle and lined with sponge rubber.

The nozzle bracket assembly is shown in the container with a nozzle installed in Figure 3.

d. Sway Brace Clamp

The sway brace clamp is an AN 737 Hose Clamp which secures the sway brace to the tanks internal frame work.

e. Actuator Bracket

The actuator bracket connects the tank actuator to the nozzle duct shield securing both items for shipment. It is made of 6061-T6 aluminum strip formed to an offset to fit the tank components. Bracket is stored on frame angle with an AN3-6 bolt, washer and self-locking nut.

f. Breather Assembly

The breather assembly consists of two 6061-O aluminum spinnings, a 6061-T6 aluminum cover plate, a U. S. Chemical Corps type M-11 canister filter, a pressure relief valve, and a vacuum relief valve. Neoprene O-ring type gaskets provided the seal between the spinnings and between the filter spinning and the container surface. They are secured in place with commercial hardware which can be removed with common hand tools.

The breather assembly is shown in Figure 4.

g. Explosive Cutter Storage Box

An external hermetically sealed storage box has been provided for the spray tanks explosive cutters. It is constructed with a hinged cover and a quick release fastener.

The storage box is shown in Figure 5 ready for shipment.

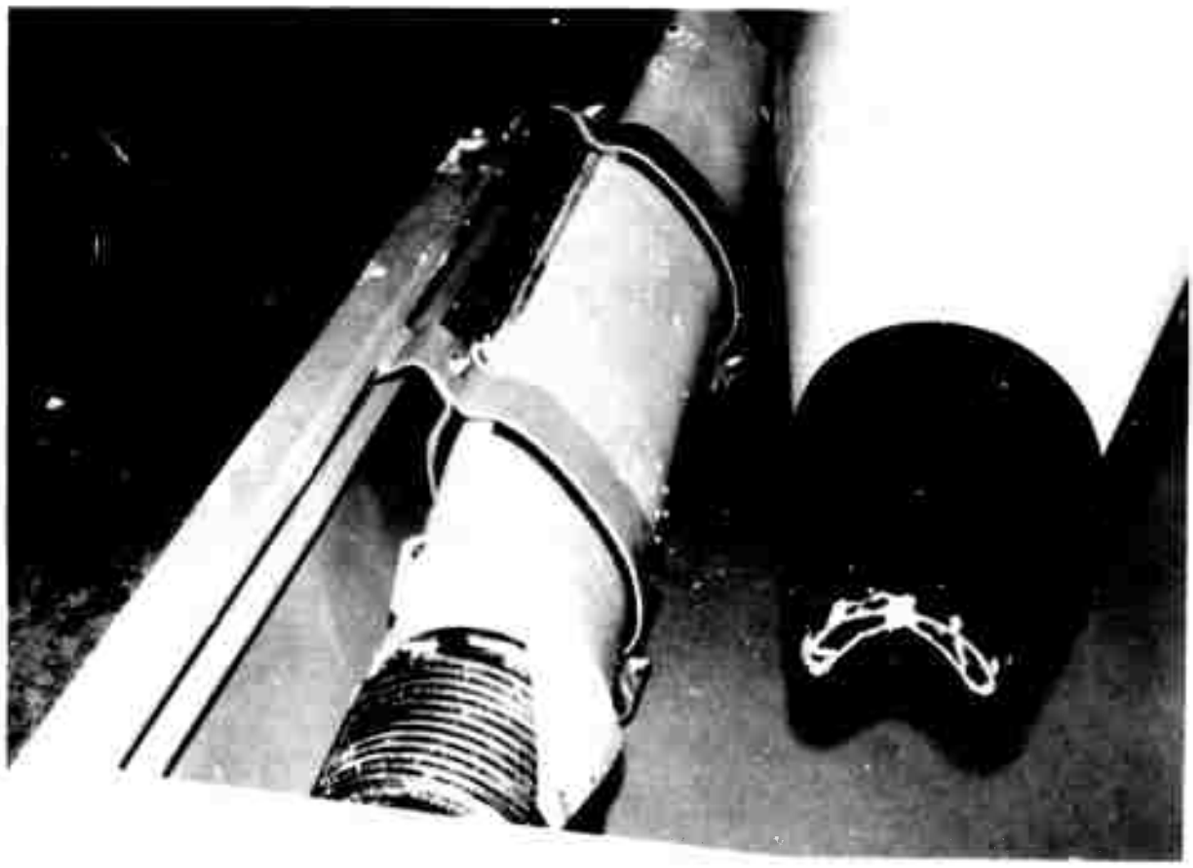

Figure 3 Nozzle Assembly Bracket

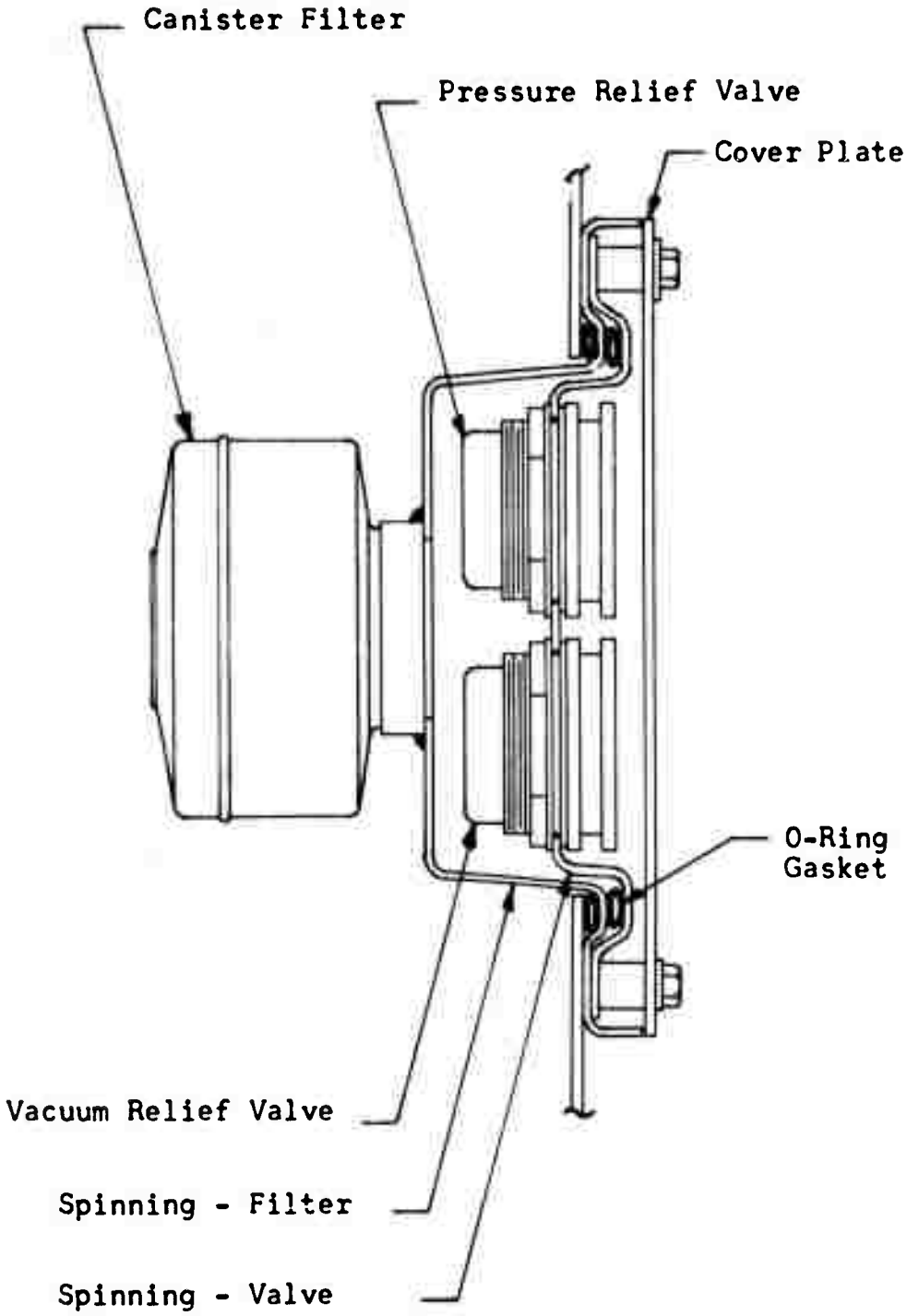

Figure 4 Breather Assembly

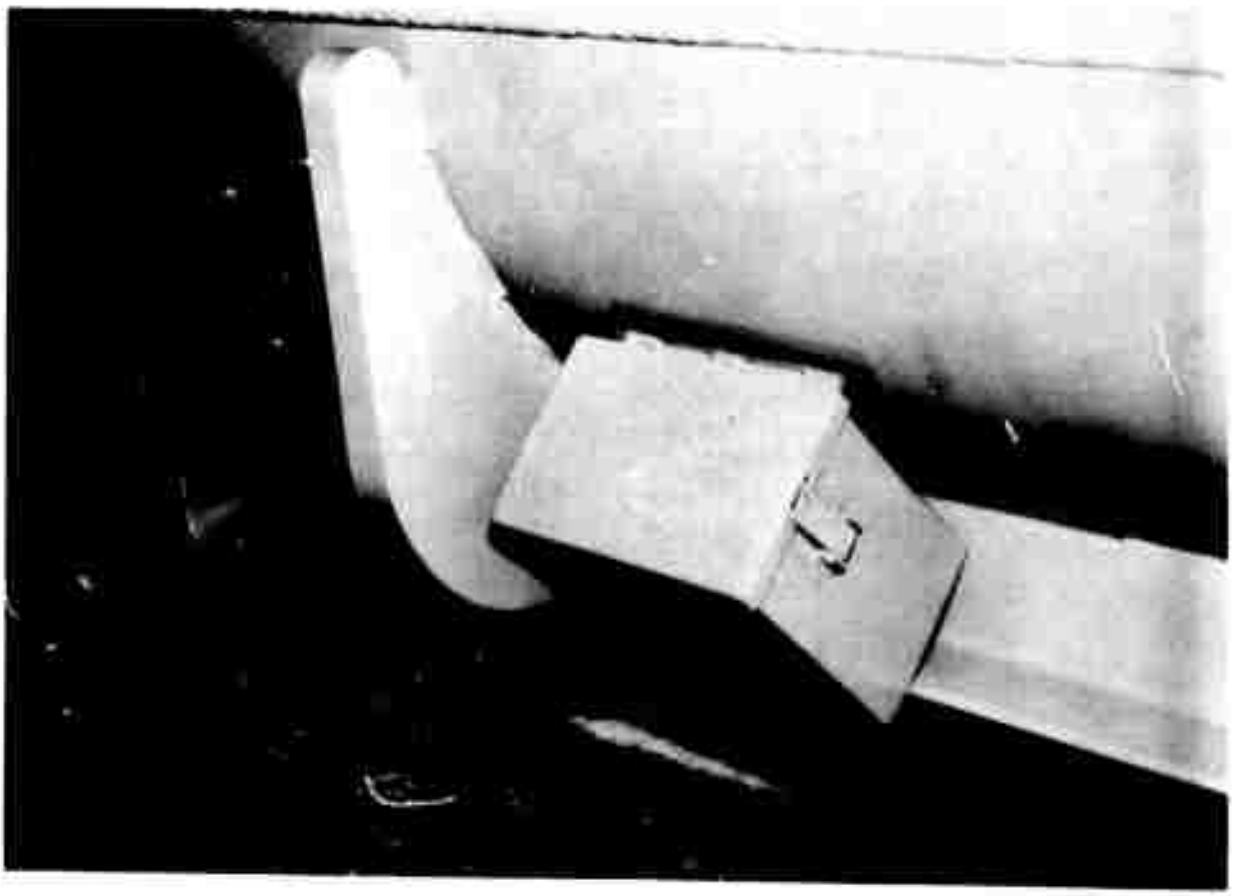

Figure 5 Explosive Cutter Storage Box

2. DESIGN AND DEVELOPMENT OF MAJOR COMPONENTS

The containers developed under this contract have undergone, and passed, rigid tests which are described in this report. During these tests several weak points in the container construction appeared. These weak points have brought about engineering drawing changes which either reinforce or correct these faulty areas.

The design of a shipping and storage container begins with an extensive study of the design specification and the unit which is to be packaged. The following is a brief description of the design and development of the CNU-89/E23 Hermetic Shipping and Storage Container.

a. Suspension System

Suspension points on the spray tank are selected for supporting it in the container. These points are usually the points used for supporting or securing the unit in its operational attitude. Due to the internal structure of the spray tank, it was not possible to support the spray tank from its underside. The tank suspension lugs were chosen for simplicity of design of the dual yoke member of the frame. The spreader brackets and dual yoke were designed to be made of castings for low fabrication costs in production. Angles were chosen for side members to tie the spreader brackets together and for points of suspension. Engineering calculations are performed to determine the approximate effect of various static forces and "g" levels on the frame in several attitudes as a result of the tests the container will undergo. A stress analysis is then performed to determine the material and thickness the members must be constructed of to withstand these forces.

A resilient, self-damping, load suspension system is then designed to suspend the spray tank and frame assembly within the container to prevent damage to the spray tank resulting from transient vibrations excited by the rough handling and steady state vibrations encountered during shipment. The four items that must be determined are elastomeric material, physical size, quantity of mounts and dynamic spring rate. The elastomeric material must be a broad temperature range silicone compound rubber to meet the performance requirements at -65°F and +160°F set forth in the design specification. The minimum deflection required to meet the fragility level to which the system is being designed for is then calculated. The next step in shock mount selection is to calculate the systems dynamic vertical spring rate to give the required deflection. The following is a trial and error procedure for selecting the particular shock mount. Step no. 1 - divide the system spring rate

by the estimated number of mounts required giving the spring rate of one mount. Step no. 2 - select a mount from the available shock mounts that is closest to this spring rate. Step no. 3 - calculate the static shear stress, dynamic shear stress, and the dynamic shear strain. If either of these values exceeds the manufacturers allowable working stresses, a larger shock mount should be selected or increase the quantity of mounts in the system.

The locking bar that slides through the tank suspension lug and into the dual yoke is shown in Figure 6. This is one area that has been changed on the engineering drawings. To eliminate any side movement of the bar in the yoke, the opening between the gussets has been reduced to 1 1/8 inches.

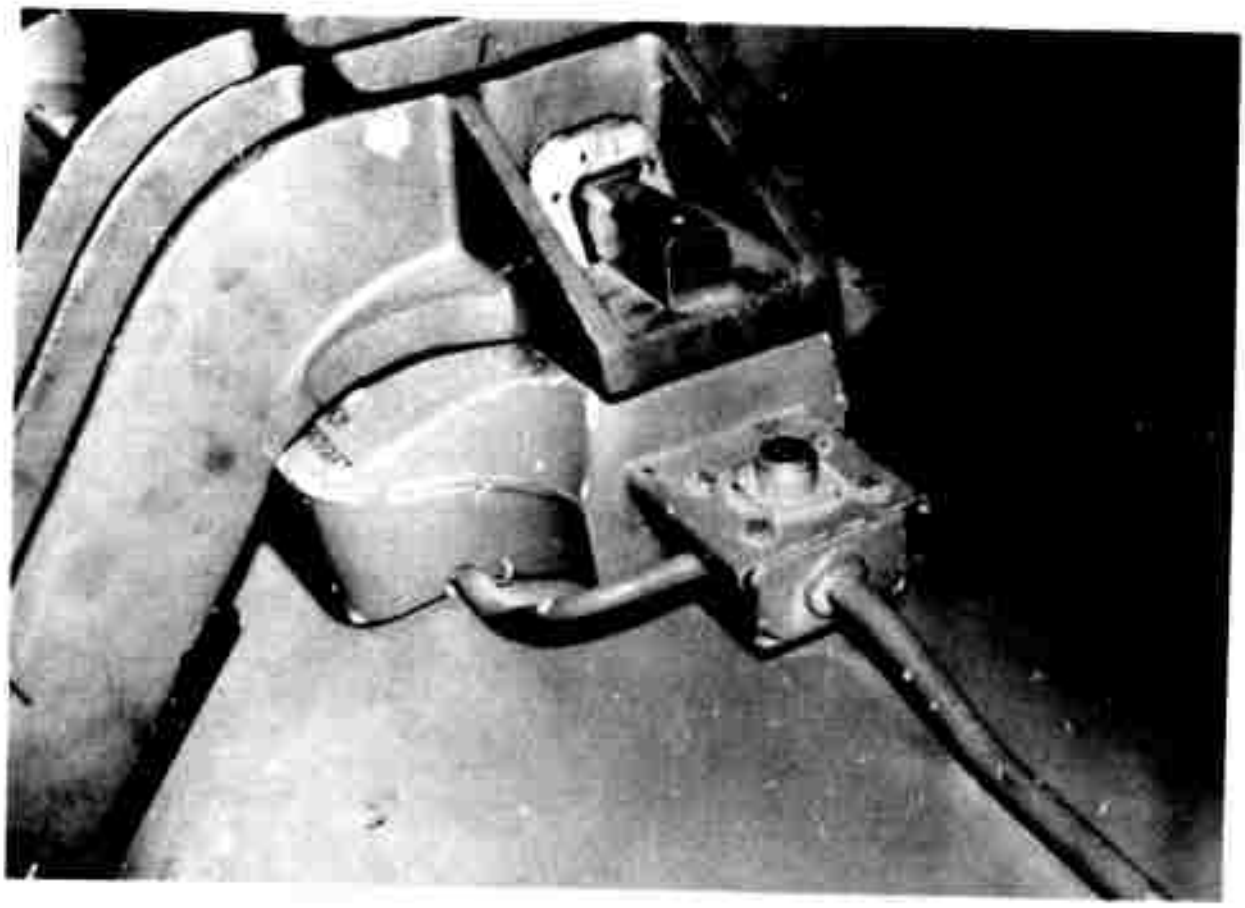

Figure 6 Suspension Lug Bar and Yoke Assembly

b. Container Shell

The container shell is of cylindrical design to maintain a minimum practical size over the spray tanks configuration. The internal size is a result of the tanks dimensions, excursion of the tank, and a nominal clearance. The sealing flange is designed to give a section modules high enough to reduce deflection of the sides while under internal pressure. Bracket and angle location, size, and thickness, are designed to meet design specification requirements while maintaining lowest fabrication costs possible. The containers lifting and handling appendages are built into the structure to reduce the number of parts that go into the container.

Several engineering drawing changes have been made to eliminate weak and faulty areas in the container construction. The side stiffeners were changed from a deep drawn design to a heavy flat plate with a load spreader plate between it and the container skin. This stiffens the sides, gives more welding area, and reduces the possibility of damage from accidental snagging. Tie-down holes were added to the side stiffeners to provide more tie-down locations during shipment.

c. Breather Assembly

The breather assembly was designed to provide pressure equalization with all air flow passing through a U.S. Chemical Corps type M-11 canister filter. The canister filter is mounted in a spinning which seals to the container surface with an O-ring type neoprene gasket. A second spinning, containing a pressure relief valve and a vacuum relief valve, with a manual release button, mounts inside of the filter spinning and seals to it with an O-ring gasket. All air flow that either enters or leaves the container must therefore pass through the filter. This can plainly be seen by examining the cross sectional view of the breather assembly in Figure 4.

The pressure and vacuum relief valves are provided to permit the container to breathe during altitude changes in aircraft, and during changes in ambient temperature and barometric pressure on the ground. Each 2 inch diameter valve is capable of passing 20 cfm under 0.8 psi pressure differential. This relatively high flow rate is due to the containers large internal volume. The pressure relief valve opens when the container pressure exceeds ambient pressure by 2 psi and the vacuum relief valve opens when the ambient pressure exceeds the container pressure by 1 psi.

The relief valves are protected from damage and tampering by a cover plate which contains slots for car seals. These slots or attachment points are located so as to prevent opening without destroying the seals.

Engineering changes were accomplished to provide a better and more reliable seal of the breather assembly. The O-ring gasket diameters were changed so as to relocate the sealing surfaces to eliminate the problem.

3. HERMETIC SHIPPING AND STORAGE CONTAINER LOADING AND UNLOADING SEQUENCE

This sequence assumes an empty, assembled container and the reader's full understanding of preparatory procedures for the equipment to be packed therein.

1. Remove breather cover plate, by removing securing hardware.

2. Release any internal air pressure by turning manual release button on the vacuum relief valve. The container can then be opened by removing sealing flange hardware.

3. Remove hardware securing yoke assembly and install yoke assembly on spray tank. Install locking bars and seat set screws securely.

4. Install actuator bracket and sway brace clamp on tank. Secure sway brace slides onto frame angle with hardware provided. Clamp nozzle assembly in place and torque hardware to 4 foot pounds maximum.

5. Position spray tank and frame yoke assembly in suspension frame and secure with frame hardware. Torque hardware to 35 foot pounds maximum.

6. Load required desiccant into desiccant receptacle and torque hardware to 5 foot pounds maximum.

7. Close container and secure hardware. Tighten hardware to 14 foot pounds of torque maximum.

8. Replace breather cover plate and torque hardware to 5 foot pounds maximum. Install two car seals onto breather assembly.

9. Place explosive cutters in storage box, secure fastener and install seal wire.

To unload spray tank, perform steps 1 and 2. Remove spray tank, nozzle assembly, sway brace slides, and explosive cutters. Remove sway brace clamp and actuator bracket from spray tank and secure to suspension frame for storage.

(The reverse of this page is blank)

SECTION III

TEST DESCRIPTION

A report on container tests conducted on the contractor's premises is included in the Appendix. In addition to the contractor's tests, the container was subjected to the Munson Road Test at Aberdeen Proving Ground, Aberdeen, Maryland in November 1965. A test description and results are also included in the Appendix.

Container S/N 1 underwent and passed extensive vibration testing in three axis at the Tactical Atomic Warheads Laboratory, Picatinny Arsenal, Dover, New Jersey on 20 December, 1965. For further information on these tests, see Test No.110-65.

(The reverse of this page is blank)

SECTION IV

CONCLUSIONS AND RECOMMENDATIONS

The two containers designed and built under this contract are the first to be designed and built specifically for the TMU-28/B Chemical Spray Tank. Heretofore, less suitable, but existing and available, containers have been used for the spray tank. Since the two new, specially-designed containers have undergone and passed extensive environmental testing, we conclude that the container is fully developed, and recommend that it be standardized until changes in the chemical spray tank or its environment dictate changes in design.

(The reverse of this page is blank)

APPENDIX

HERMETIC SHIPPING AND STORAGE CONTAINER TEST PROGRAM

(CONTAINER RESEARCH CORPORATION TR-CRC-65-23)

(The reverse of this page is blank)

REPORT OF TEST

ON

CONTAINER: SHIPPING AND STORAGE HERMETIC

FOR: TMU-28/B CHEMICAL SPRAY TANK

CONTAINER P/N 65J10934

ROUGH HANDLING TESTS

CONDUCTED BY

RODGER L. HALL, JR.

CHIEF OF ENGINEERING TEST & SYSTEMS

ON THE PREMISES OF

CONTAINER RESEARCH CORPORATION

Glen Riddle, Pa.

TEST DATE: 19 October 1965

REPORT NUMBER CRC-65-23

(The reverse of this page is blank)

ADMINISTRATIVE DATA

PURPOSE OF TEST: QUALIFICATION

MANUFACTURER: Container Research Corporation
Glen Riddle, Pennsylvania

MANUFACTURERS P/N: 65J10934

SERIAL NUMBER: S/N 1

SPECIFICATION: R & D Exhibit NR ATC 65 - 82

3 March 1965

QUANTITY OF ITEMS TESTED: One (1)

SECURITY CLASSIFICATION OF ITEMS TESTED: Unclassified

GOVERNMENT CONTRACT NO: AF 08(635) - 5341

DATE TEST COMPLETED: 20 October 1965

Test Conducted by: Rodger L. Hall, Jr.
Container Research Corporation
Glen Riddle, Pennsylvania

Disposition of Speciman: Shipped to Picatinney Arsenal for further tests.

ABSTRACT: Subject container was one of two prototypes designed and manufactured by Container Research Corporation for Eglin Air Force Base.

(The reverse of this page is blank)

FACTUAL DATA

DESCRIPTION OF TEST APPARATUS:

1. Columbia Model 510-TX Tri-Axial Accelerometer
2. Columbia Model 4003 Cathode Follower
3. Tektronix Model 551 Dual Beam Oscilloscope
4. Textronix Type CA Preamplifier
5. Tektronix Type D Preamplifier
6. Deflection Indicators
7. Modeling Clay (used with Deflection Indicators)
8. Towmotor Forklift Truck 6000 lb capacity
9. Electric Overhead Hoist 4000 lb capacity
10. Wood Block, 5 x 5 x 72 inches long
11. Wood Block, 5 x 12 x 72 inches long
12. Miscellaneous Wire Rope Slings
13. Quick Release Drop Hook - 11,000 lb capacity
14. Miscellaneous Hand Tools (socket wrench, tape measure, box wrenches, allen wrenches, etc.)
15. Pneumatic Nut Remover
16. Air Supply for Pressurizing Container
17. Leak Detection Air Gage
18. Soap and Water Solution for Leak Detection
19. 35mm Minolta Camera for 35mm Slides

NOTE: Items 1 through 5 were supplied and operated by Gould Laboratories, Pitman, N. J.

FACTUAL DATA

TEST PROCEDURE:

The loaded container was tested in accordance with the following paragraphs of R & D Exhibit NR ARC 65-82.

4.4.1	Examination of Product
4.4.2	Pressure Retention
4.4.3	Drop Tests
4.4.3.1	Rotational Drop Tests
4.4.4	Rollover Test
4.4.5(b)	Pendulum Impact Test
4.4.6	Static Load Test
4.4.7.1	Hoisting Test
4.4.7.2	Lifting Test

TEST METHODS: (4.4)

EXAMINATION OF PRODUCT: (4.4.1)

The container was carefully examined and found in full compliance with the materials, design, and workmanship requirements of the design specification and applicable drawings.

LEAKAGE: (4.4.2)

The container was pressurized to 3.5 psig. A gasket leak developed at the air service receptacle. The gasket was replaced with a larger diameter gasket resulting in an effective seal. The container pressure was retained for a period of 30 minutes. This test was performed before and after rough handling tests.

FACTUAL DATA

DROP TESTS: (4.4.3)

Qualification drop tests were performed in accordance with the specification requirements. The resulting data is presented in tabular form (see Tables I & II and Figures A-10 to A-20). Instrumentation was supplied and operated by Gould Laboratories, Pitman, New Jersey.

STATIC LOADING: (4.4.6)

A load equal to four times the gross container weight was applied to the container top stacking surfaces. (See Figure No. A-7).

4 x 2850 = 11,400 lbs.

HANDLING CHARACTERISTICS TEST: (4.4.7)

HOISTING TEST: (4.4.7.1)

Loaded container lifted clear of ground by four lift provisions individually at a time as shown in Figure A-8.

LIFTING TEST: (4.4.7.2)

Transport loaded container by forklift truck for a distance of 120 ft. Since container center of gravity would not permit a free lift from either end, the container end was lifted to a height of 6 inches and an attempt was made to drag the container by forklift prongs as shown in Figure A-9. This was not successful due to the prongs sliding out from under container.

A cable sling was attached to the forklift and container tow holes in end of skid angle and was satisfactorily dragged for 100 ft. minimum.

FACTUAL DATA

MUNSON ROAD TEST:

Container S/N 2 was shipped to Aberdeen Proving Grounds where it was subjected to road tests consisting of five laps over each of the prescribed Munson test courses.

A TMU-28/B Chemical Spray Tank containing 1400 pounds of water was installed in the shipping container. The container was secured to a M36C, 6 x 6, 2-1/2 Ton, Cargo Truck with wire rope tie-downs. These tie-downs were supplied and rigged by Aberdeen Proving Ground personnel and approved by representatives of Container Research Corporation.

The truck with container was driven five laps over the following Munson test courses at speeds indicated:

Munson Test Course	Speed
Six Inch Washboard	5 Mph
Belgian Block	20 Mph
Two Inch Washboard	8 - 10 Mph
Radial Washboard	15 Mph
Spaced Bump	20 Mph

The Tie-downs used for these tests satisfactorily restricted relative motion between the truck bed and container on all test courses.

After completion of the tests, the container and spray tank were visually examined for any apparent defects.

The suspension lug bars that suspend the spray tank from the frame yoke assembly vibrated out of their slots during the tests. The tank was still in place but was supported by the bottom cross-over members of the suspension frame.

Upon careful examination of the suspension frame, an interference between the sides of the frame yoke assembly and spray tank hardback assembly was noticed. This interference prevented the seating of the spray tank in the yoke assembly which, under vibration, allowed motion between them resulting in the failure of the set screws to lock them in place.

There was no apparent structural damage to the shipping container or spray tank as a result of these tests.

FACTUAL DATA

RESULTS OF TESTS:

The container and its component parts were examined after completion of testing and no apparent damage or possible points of failure were found to be present.

RECOMMENDATIONS:

None - Data merely submitted.

CONTAINER TESTS
HERMETIC SHIPPING AND STORAGE CONTAINER CNU-89/E23

Test No.	Type	Figure No.	Location Deflection Indicators	Height Raised (Inches)	Deflection Station	Deflection (Inches)	Remarks
1	Rotational	A-4	Figure 7	6	#1 #2	1 3/4 1 3/4	No evident damage
2	Rotational	A-4	"	6	#3 #4	1 3/4 1 3/4	"
3	Corner Rotational	A-5	"	6	#3 #4	1 3/4 1 3/4	"
4	"	"	"	12	#3 #4	2 1/2 2 1/2	"
5	"	"	"	6	#1 #2	1 3/4 1 3/4	"
6	"	"	"	12	#1 #2	2 3/8 2 3/8	"
7	Pendulum	A-6	"	18	#6	*	*See Figure A-1
8	Pendulum	A-6	"	18	#7	1 3/4	Clearance = 1 1/2 inches
9	Rollover	A-3	"	-	#5 #2 & #3	* *	**No contact clearance = 1 1/4 inches
10	"	"	"	-	#5	* *	"
11	"	"	"	-	#5 #1 & #4	* *	"
12	"	"	"	-	#1, #2, #3 & #4	* *	"

Table I. Container Test Program Deflection Indicator Results

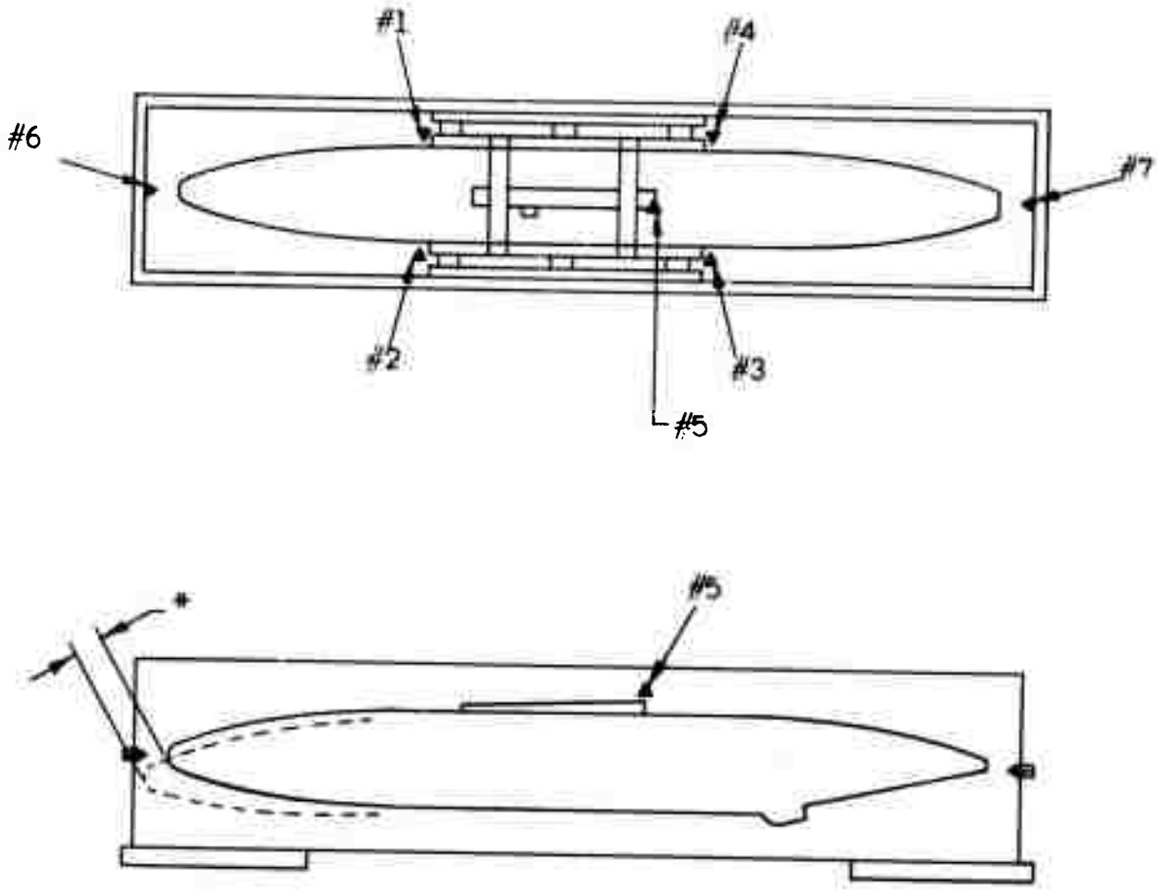

▲ Modeling Clay and Deflection Indicator

* 3 1/2 IN deflection - 2 1/2 IN clearance during Pendulum Impact Test

Figure A-1 Deflection Indicator Location Diagram

CONTAINER TESTS
HERMETIC SHIPPING AND STORAGE CONTAINER CNU-89/E 23

TEST NO.	TYPE	FIGURE NO.	IMPACT SIDE	Blocked Hot-Inches				HEIGHT RAISED (Inches)	Impact/G's			SCOPE TRACE
				A1	A2	B1	B2		X	Y	Z	
1	Rotational	A - 4	A	-	-	5	5	6	-	2.0	1.5	Fig. A-10
2	Rotational	A - 4	B	5	5	-	-	6	1.0	2.5	-	" A-11
3	Corner Rotational	A - 5	B2	10	5	-	-	6	1.0	2.5	1.8	" A-12
4	"	"	B2	10	5	-	-	12	1.0	4.0	2.5	" A-13
5	"	"	A1	-	-	5	10	6	-	3.0	1.5	" A-14
6	"	"	A1	-	-	5	10	12	.5	3.5	2.5	" A-15
7	Pendulum	A - 6	A	-	-	-	-	18	5.2	-	-	" A-16
8	Pendulum	A - 6	B	-	-	-	--	18	5.0	1.8	1.0	" A-17
9	Rollover	A - 3	A2-B2	-	-	-	-	-	1.0	1.0	3.5	" A-18
10	"	"	Top	-	-	-	-	-	-	1.0	.5	" A-19
11	"	"	A1-B1	-	-	-	-	-	-	.5	2.2	" A-19
12	"	"	Bottom	-	-	-	-	-	-	3.0	3.5	" A-20

TABLE II Container Test Program Instrumentation Results

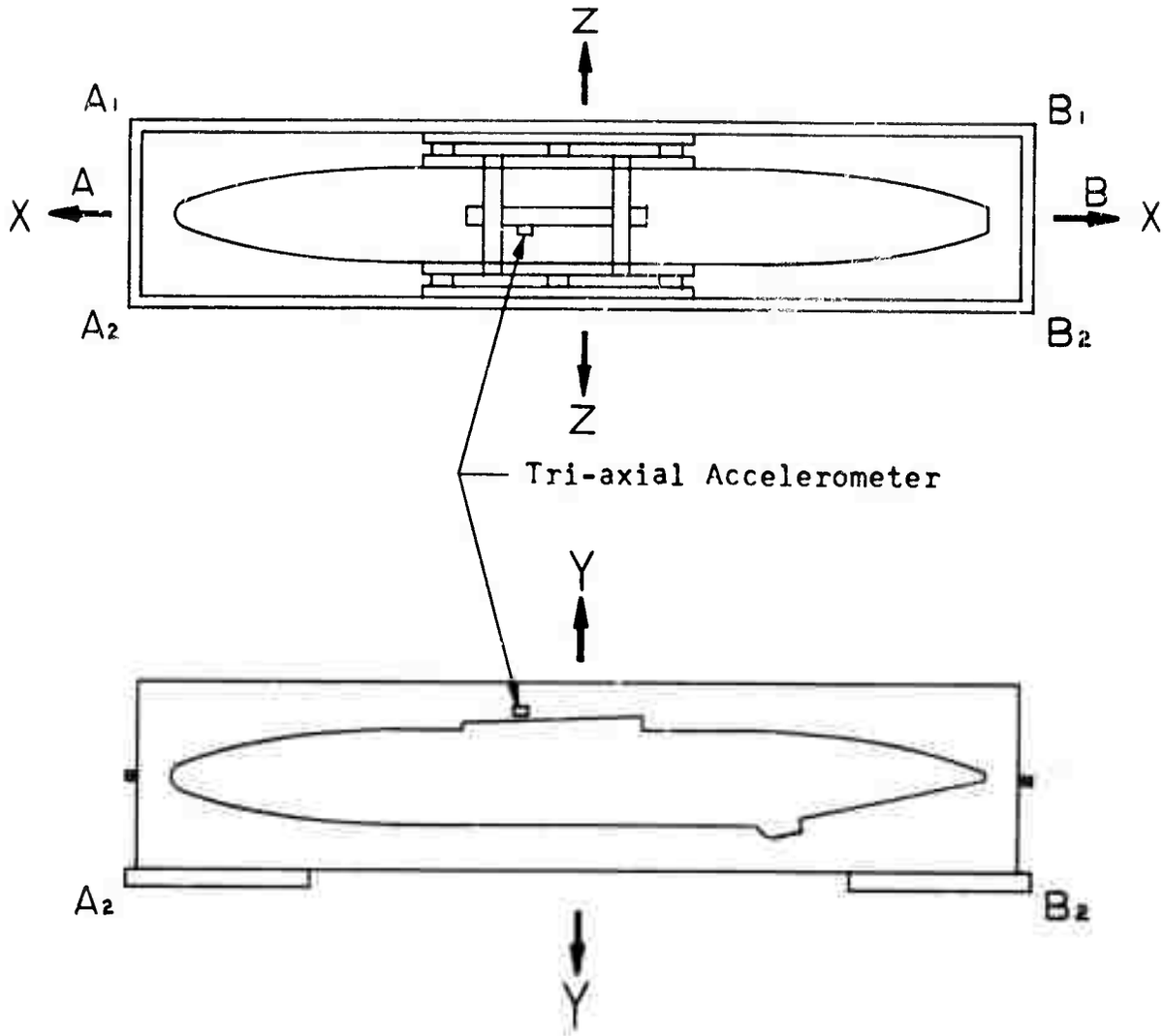

Figure A-2 Accelerometer Location Diagram

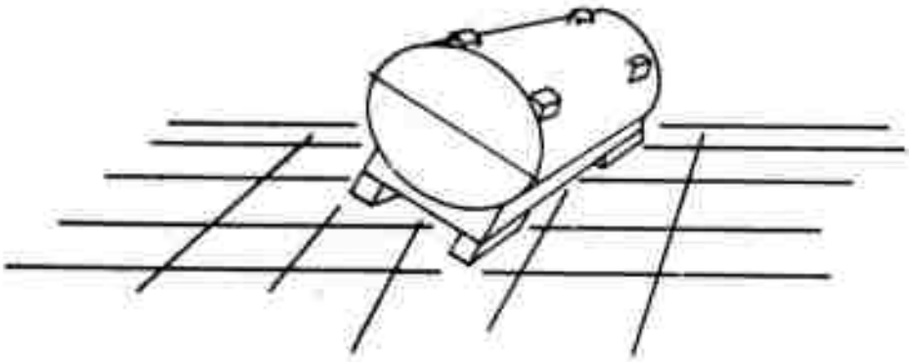

Figure A-3 Rollover Test

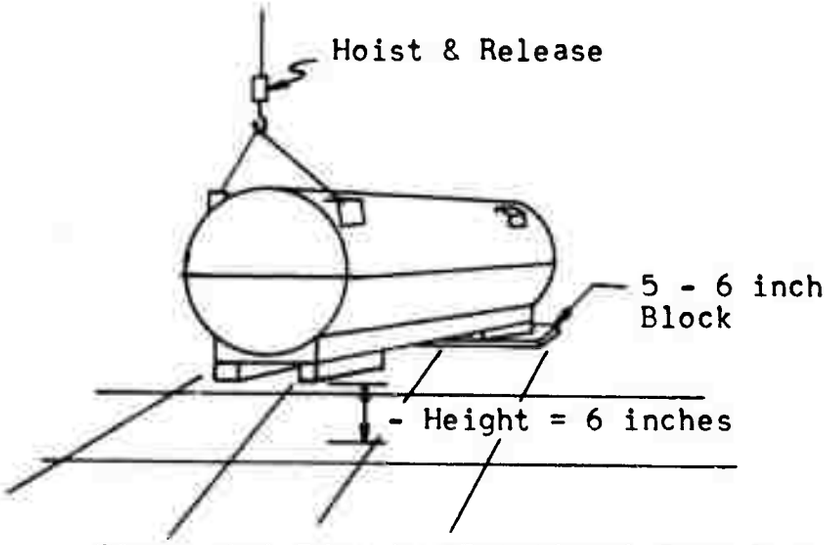

Figure A-4 Edgewise Rotational Drop Test

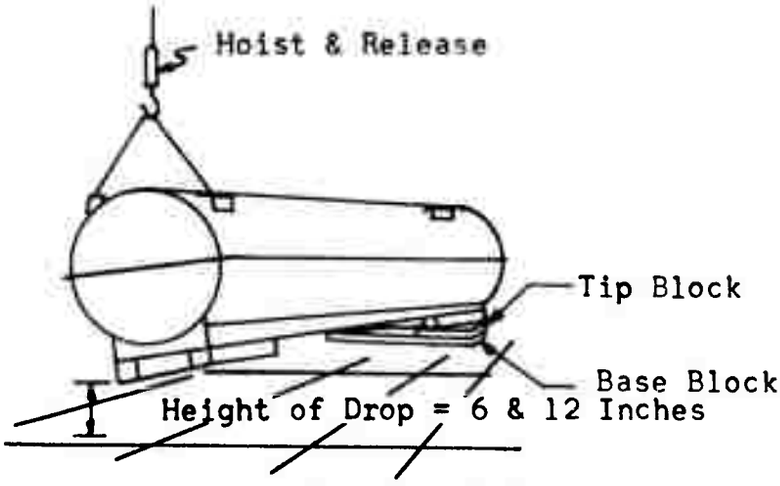

Figure A-5 Cornerwise Rotational Drop Test

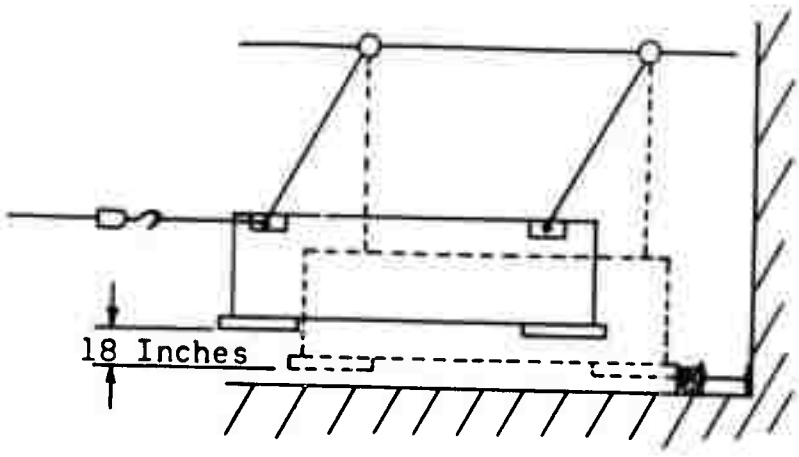

Figure A-6 Pendulum Impact Test

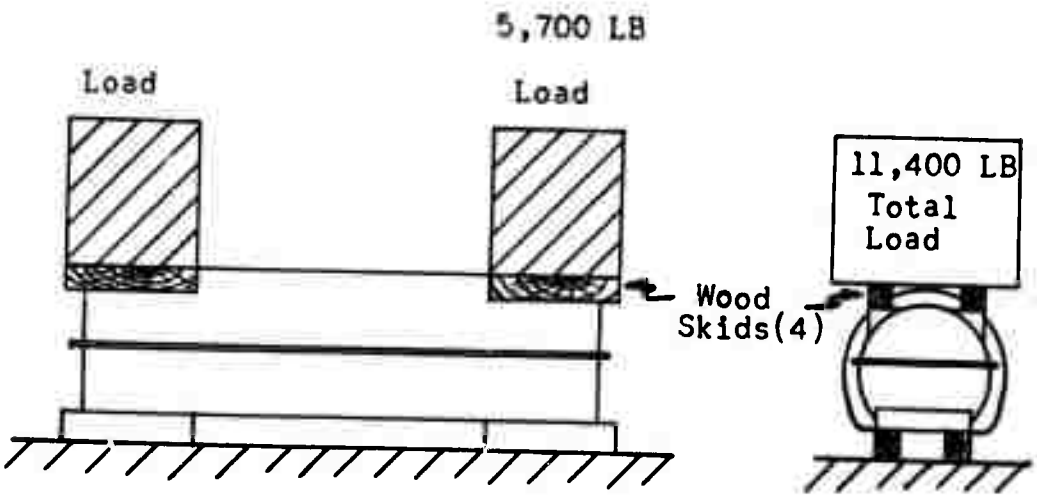

Figure A-7 Static Loading Test

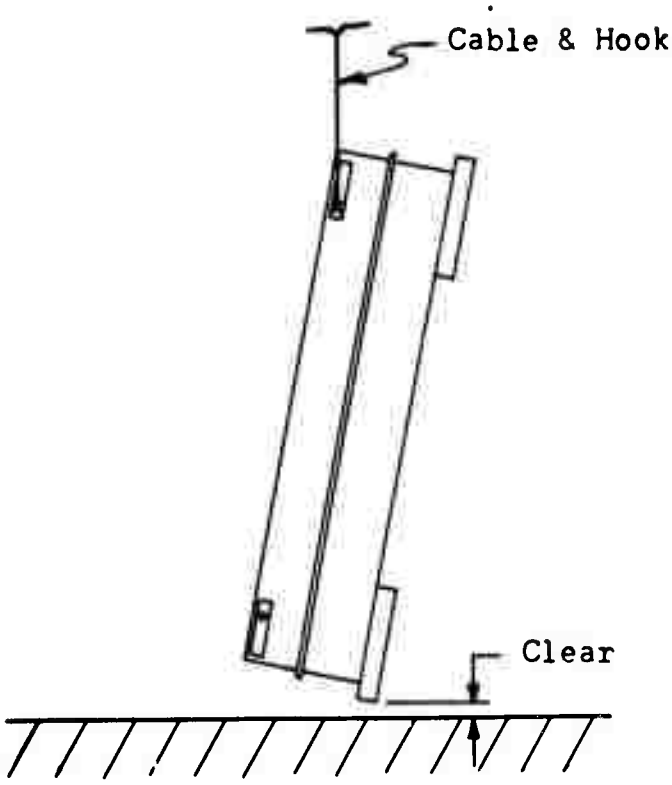

Figure A-8 Single Point Hoisting Test

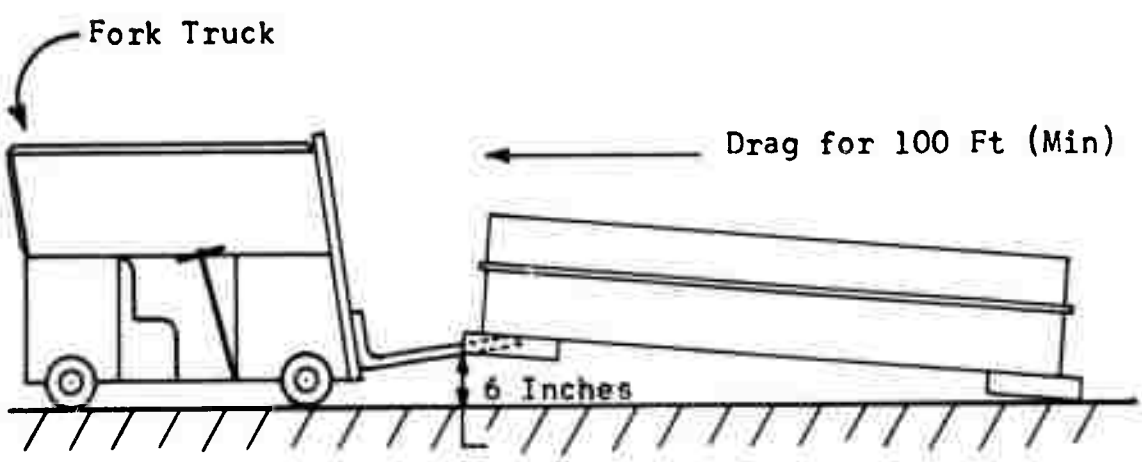

Figure A-9 Forklift Truck Lifting Test
(Alternate to End Lift Test)

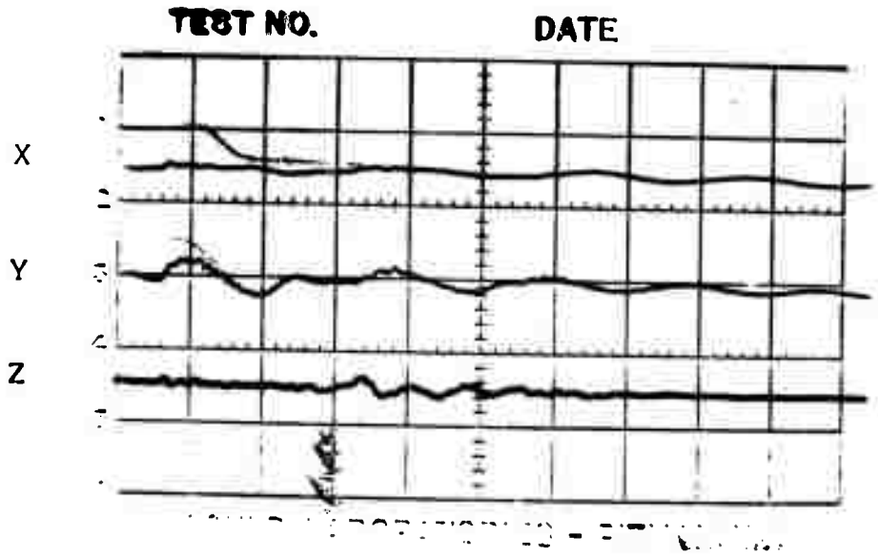

10 G's/cm All Axis
100 ms/cm Sweep

Figure A-10 Oscilloscope Trace - Test No. 1

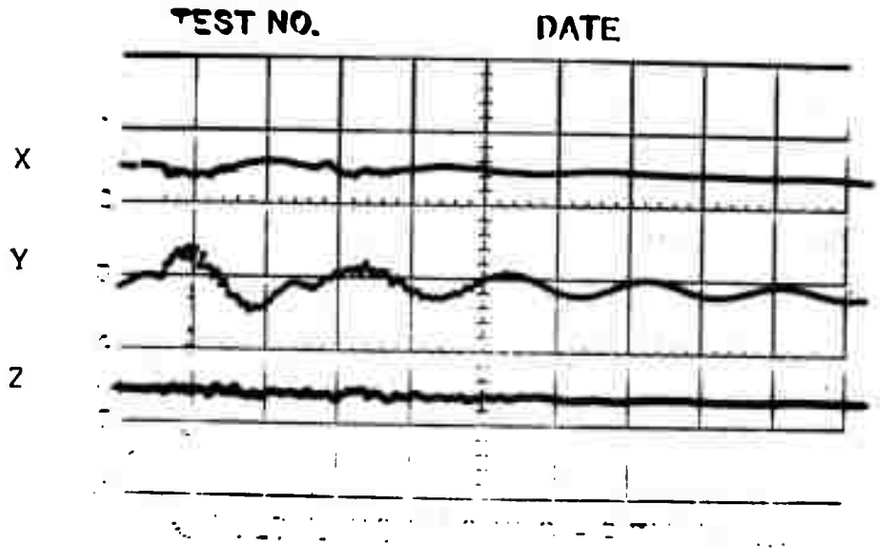

5 G's/cm All Axis
100 ms/cm Sweep

Figure A-11 Oscilloscope Trace - Test No. 2

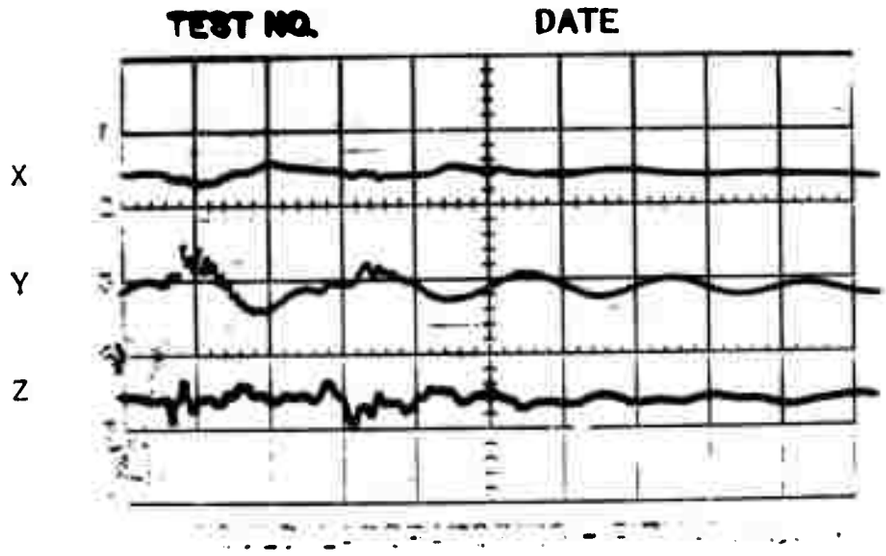

5 G's/cm All Axis
100 ms/cm Sweep

Figure A-12 Oscilloscope Trace - Test No. 3

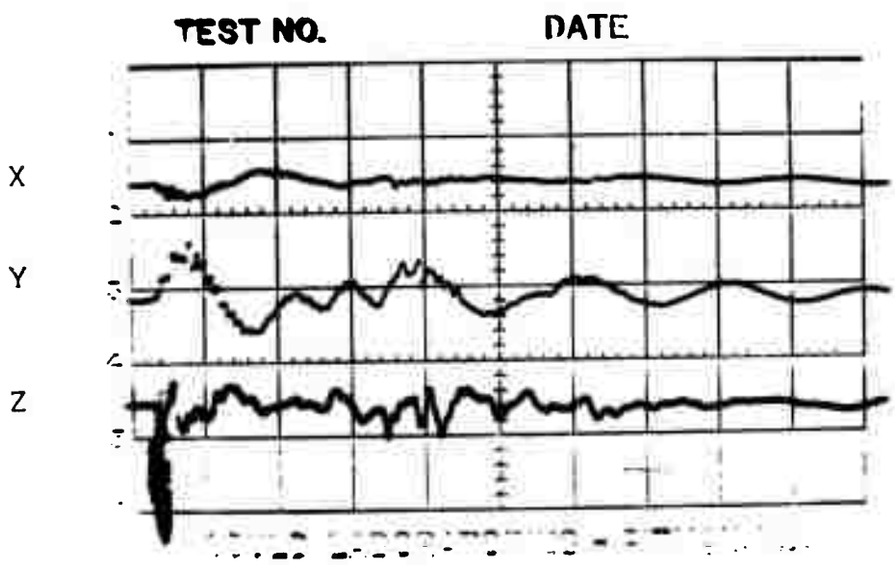

5 G's/cm All Axis
100 ms/cm Sweep

Figure A-13 Oscilloscope Trace - Test No. 4

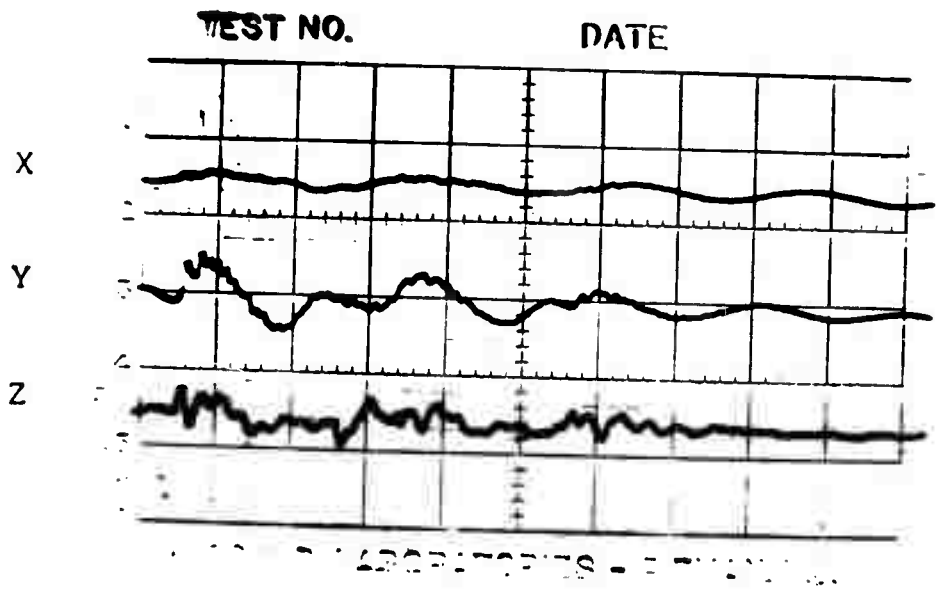

5 G's/cm ALL AXIS
100 ms/cm Sweep

Figure A-14 Oscilloscope Trace - Test No. 5

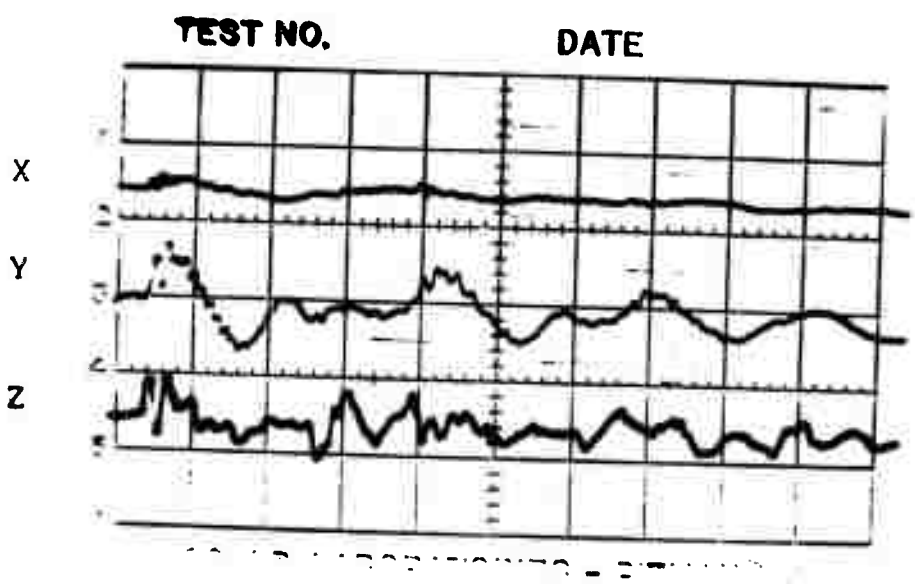

5 G's/cm All Axis
100 ms/cm Sweep

Figure A-15 Oscilloscope Trace - Test No. 6

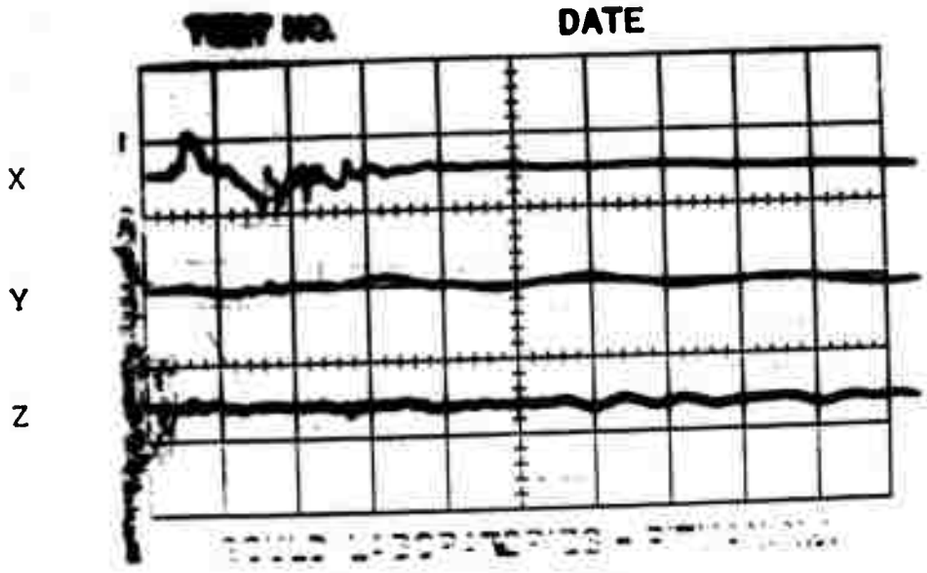

10 G's/cm All Axis

100 ms/cm Sweep

Figure A-16 Oscilloscope Trace - Test No. 7

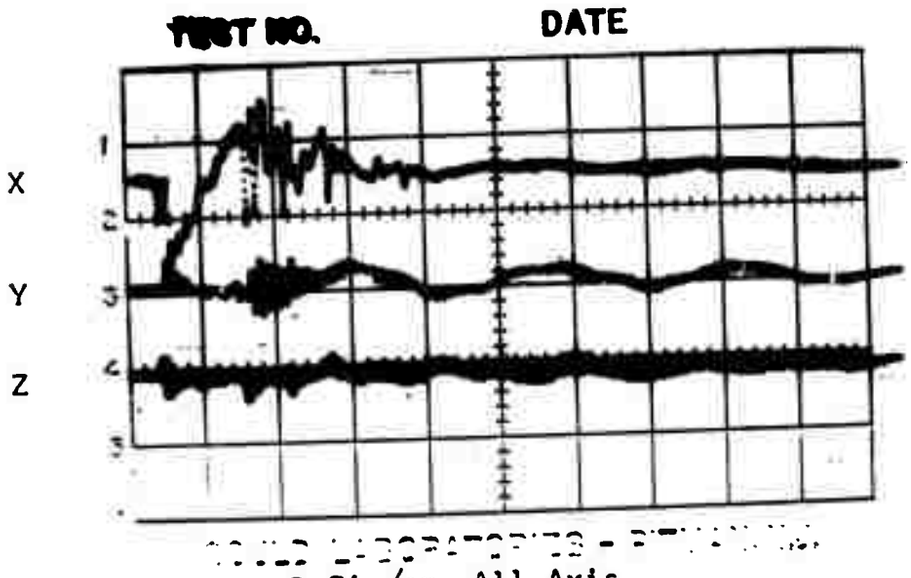

5 G's/cm All Axis

100 ms/cm Sweep

Figure A-17 Oscilloscope Trace - Test No. 8

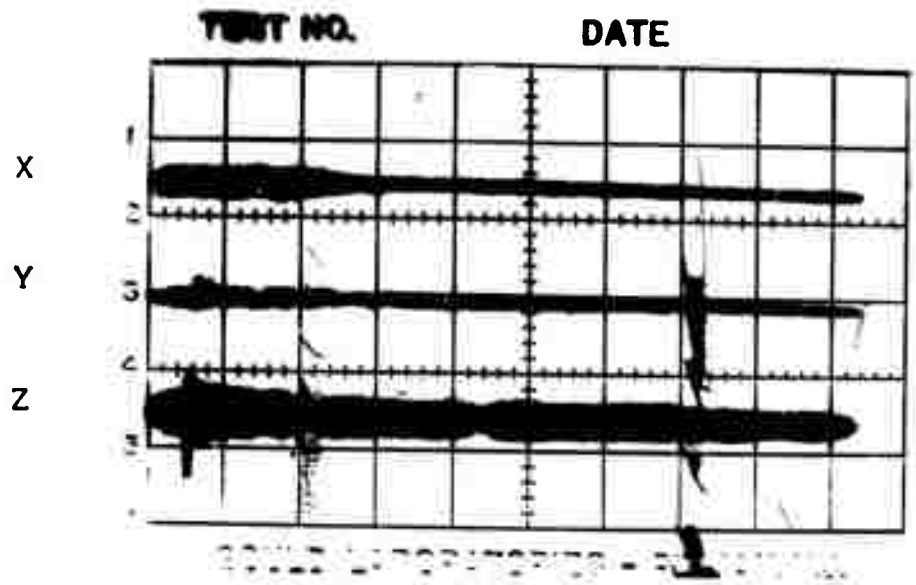

5 G's/cm All Axis
2 Sec/cm Sweep

Figure A-18 Oscilloscope Trace - Test No. 9

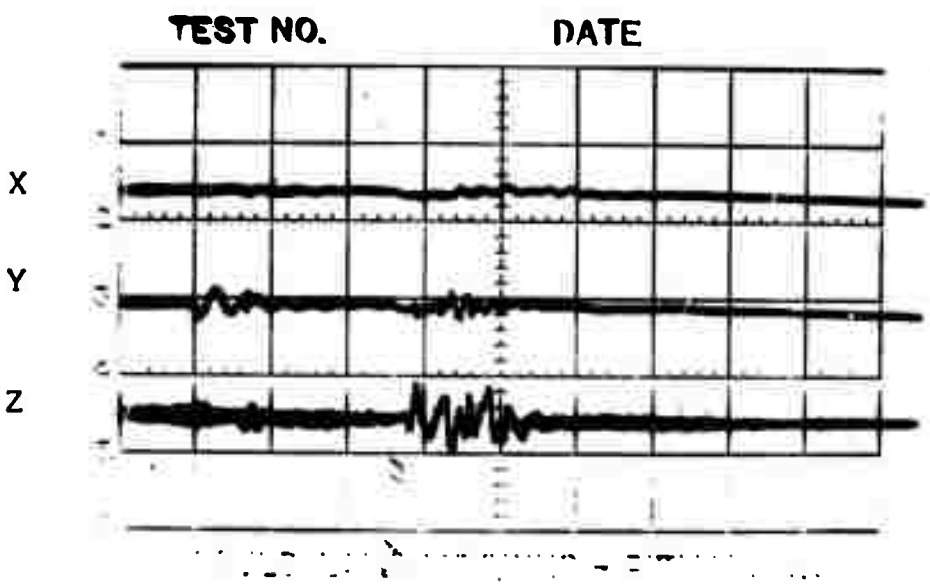

5 G's/cm All Axis
.5 Sec/cm Sweep

Figure A-19 Oscilloscope Trace - Test No. 10 & 11

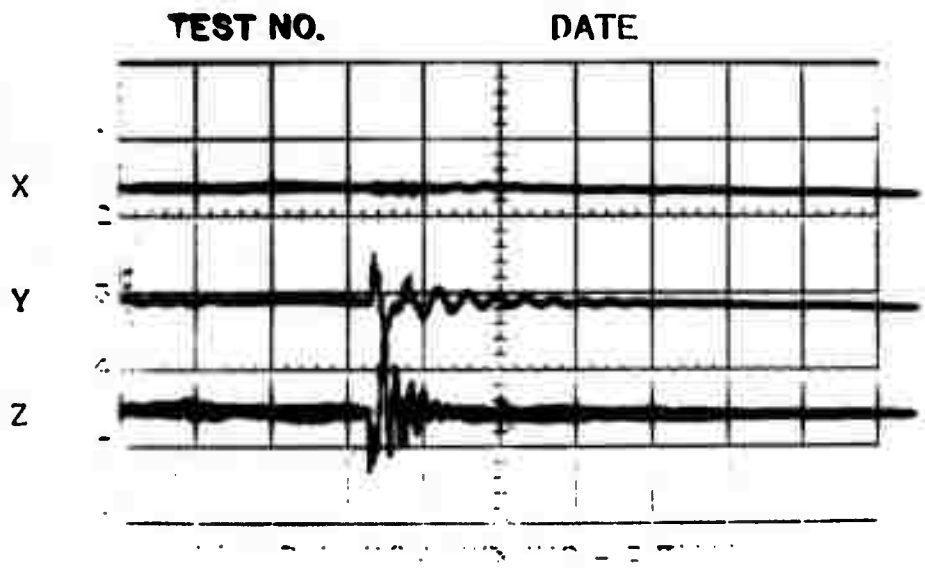

5 G's/cm All Axis
.5 Sec/cm Sweep

Figure A-20 Oscilloscope Trace - Test No. 12

Unclassified
Security Classification

DOCUMENT CONTROL DATA - R&D

(Security classification of title, body of abstract and indexing annotation must be entered when the overall report is classified)

1 ORIGINATING ACTIVITY (Corporate author)
Container Research Corporation
Glen Riddle, Pennsylvania

2a REPORT SECURITY CLASSIFICATION
Unclassified

2b GROUP
--

3 REPORT TITLE
DEVELOPMENT OF HERMETIC SHIPPING AND STORAGE CONTAINER CNU-89/E23

4 DESCRIPTIVE NOTES (Type of report and inclusive dates)
Final Technical Report, 29 June, 1965 through 21 Feb. 1966

5 AUTHOR(S) (Last name, first name, initial)
KRAUSS, LELAND L.

6 REPORT DATE
October 1966

7a TOTAL NO. OF PAGES
45

7b NO. OF REFS
2

8a CONTRACT OR GRANT NO.
AF 08(635)5341

b. PROJECT NO.
P 672833

c.

d

9a ORIGINATOR'S REPORT NUMBER(S)
AFATL-TR-66-99

9b OTHER REPORT NO(S) (Any other numbers that may be assigned this report)
none

10 AVAILABILITY/LIMITATION NOTICES This document is subject to special export controls and each transmittal to foreign governments or foreign nationals may be made only with prior approval of the Air Force Armament Laboratory(ATCC), Eglin AFB, Florida.

11 SUPPLEMENTARY NOTES
Available in DDC

12 SPONSORING MILITARY ACTIVITY
Air Force Armament Laboratory
Air Force Systems Command
Eglin Air Force Base, Florida

13 ABSTRACT

The objective of the work performed under this contract, No. AF 08(635)5341, was to design, manufacture, and test two hermetic shipping and storage containers for the protection of the TMU-28/B Chemical Spray Tank during handling, transit, and storage, with means of preventing any of the spray tank's contents from accidentally escaping from the container to the surrounding environment, and means for the external storage of explosive tank cutters. The resultant container, designated CNU-89/E23, was subjected to and passed rigorous environmental testing, and is now considered fully developed.

DD FORM 1 JAN 64 1473

Unclassified
Security Classification

14. KEY WORDS	LINK A ROLE	LINK A WT	LINK B ROLE	LINK B WT	LINK C ROLE	LINK C WT
CNU-89/E23						
Shipping Container						
Hermetic Shipping and Storage Container						

INSTRUCTIONS

1. ORIGINATING ACTIVITY: Enter the name and address of the contractor, subcontractor, grantee, Department of Defense activity or other organization (*corporate author*) issuing the report.

2a. REPORT SECURITY CLASSIFICATION: Enter the overall security classification of the report. Indicate whether "Restricted Data" is included. Marking is to be in accordance with appropriate security regulations.

2b. GROUP: Automatic downgrading is specified in DoD Directive 5200.10 and Armed Forces Industrial Manual. Enter the group number. Also, when applicable, show that optional markings have been used for Group 3 and Group 4 as authorized.

3. REPORT TITLE: Enter the complete report title in all capital letters. Titles in all cases should be unclassified. If a meaningful title cannot be selected without classification, show title classification in all capitals in parenthesis immediately following the title.

4. DESCRIPTIVE NOTES: If appropriate, enter the type of report, e.g., interim, progress, summary, annual, or final. Give the inclusive dates when a specific reporting period is covered.

5. AUTHOR(S): Enter the name(s) of author(s) as shown on or in the report. Enter last name, first name, middle initial. If military, show rank and branch of service. The name of the principal author is an absolute minimum requirement.

6. REPORT DATE: Enter the date of the report as day, month, year; or month, year. If more than one date appears on the report, use date of publication.

7a. TOTAL NUMBER OF PAGES: The total page count should follow normal pagination procedures, i.e., enter the number of pages containing information.

7b. NUMBER OF REFERENCES: Enter the total number of references cited in the report.

8a. CONTRACT OR GRANT NUMBER: If appropriate, enter the applicable number of the contract or grant under which the report was written.

8b, 8c, & 8d. PROJECT NUMBER: Enter the appropriate military department identification, such as project number, subproject number, system numbers, task number, etc.

9a. ORIGINATOR'S REPORT NUMBER(S): Enter the official report number by which the document will be identified and controlled by the originating activity. This number must be unique to this report.

9b. OTHER REPORT NUMBER(S): If the report has been assigned any other report numbers (*either by the originator or by the sponsor*), also enter this number(s).

10. AVAILABILITY/LIMITATION NOTICES: Enter any limitations on further dissemination of the report, other than those imposed by security classification, using standard statements such as:

(1) "Qualified requesters may obtain copies of this report from DDC."

(2) "Foreign announcement and dissemination of this report by DDC is not authorized."

(3) "U. S. Government agencies may obtain copies of this report directly from DDC. Other qualified DDC users shall request through _____."

(4) "U. S. military agencies may obtain copies of this report directly from DDC. Other qualified users shall request through _____."

(5) "All distribution of this report is controlled. Qualified DDC users shall request through _____."

If the report has been furnished to the Office of Technical Services, Department of Commerce, for sale to the public, indicate this fact and enter the price, if known.

11. SUPPLEMENTARY NOTES: Use for additional explanatory notes.

12. SPONSORING MILITARY ACTIVITY: Enter the name of the departmental project office or laboratory sponsoring (*paying for*) the research and development. Include address.

13. ABSTRACT: Enter an abstract giving a brief and factual summary of the document indicative of the report, even though it may also appear elsewhere in the body of the technical report. If additional space is required, a continuation sheet shall be attached.

It is highly desirable that the abstract of classified reports be unclassified. Each paragraph of the abstract shall end with an indication of the military security classification of the information in the paragraph, represented as *(TS), (S), (C), or (U)*.

There is no limitation on the length of the abstract. However, the suggested length is from 150 to 225 words.

14. KEY WORDS: Key words are technically meaningful terms or short phrases that characterize a report and may be used as index entries for cataloging the report. Key words must be selected so that no security classification is required. Identifiers, such as equipment model designation, trade name, military project code name, geographic location, may be used as key words but will be followed by an indication of technical context. The assignment of links, rules, and weights is optional.