AD-78, 319

HIGH-SPEED ROTOR DYNAMICS - AN ASSESSMENT OF CURRENT TECHNOLOGY FOR SMALL TURBO-SHAFT ENGINES

John M. Vance

Army Air Mobility Research and Development Laboratory
Fort Eustis, Virginia

July 1974

DISTRIBUTED BY:

NTIS

National Technical Information Service
U. S. DEPARTMENT OF COMMERCE
5285 Port Royal Road, Springfield Va. 22151

Unclassified

SECURITY CLASSIFICATION OF THIS PAGE (When Data Entered)

AD787319

REPORT DOCUMENTATION PAGE		READ INSTRUCTIONS BEFORE COMPLETING FORM
1. REPORT NUMBER USAAMRDL-TR-74-66	2. GOVT ACCESSION NO.	3. RECIPIENT'S CATALOG NUMBER
4. TITLE (and Subtitle) HIGH-SPEED ROTOR DYNAMICS – AN ASSESSMENT OF CURRENT TECHNOLOGY FOR SMALL TURBOSHAFT ENGINES		5. TYPE OF REPORT & PERIOD COVERED 6. PERFORMING ORG. REPORT NUMBER
7. AUTHOR(s) John M. Vance		8. CONTRACT OR GRANT NUMBER(s) DAHC04-72-A-0001
9. PERFORMING ORGANIZATION NAME AND ADDRESS Eustis Directorate U.S. Army Air Mobility R&D Laboratory Fort Eustis, Virginia 23604		10. PROGRAM ELEMENT, PROJECT, TASK AREA & WORK UNIT NUMBERS Project 1G162207AA72
11. CONTROLLING OFFICE NAME AND ADDRESS		12. REPORT DATE July 1974 13. NUMBER OF PAGES ~~45~~ 49
14. MONITORING AGENCY NAME & ADDRESS(if different from Controlling Office)		15. SECURITY CLASS. (of this report) 15a. DECLASSIFICATION/DOWNGRADING SCHEDULE

16. DISTRIBUTION STATEMENT (of this Report)

Approved for public release; distribution unlimited.

17. DISTRIBUTION STATEMENT (of the abstract entered in Block 20, if different from Report)

18. SUPPLEMENTARY NOTES

19. KEY WORDS (Continue on reverse side if necessary and identify by block number)

Aerodynamics	High velocity
Bearings	Rotor
Dynamics	Shafts (machine elements)
Excitation	Turbojet engines

20. ABSTRACT (Continue on reverse side if necessary and identify by block number)

Problem areas connected with rotor dynamics which are peculiar to the special requirements of rotor-bearing systems in the class of small turboshaft engines being developed for U. S. Army helicopters are identified.

The present and past philosophy of design is discussed, including the impact of the demand for front drives.

49

DD FORM 1 JAN 73 1473 EDITION OF 1 NOV 65 IS OBSOLETE

Unclassified

SECURITY CLASSIFICATION OF THIS PAGE (When Data Entered)

Block 20. Abstract - continued.

Methods for critical speed prediction and high-speed balancing are reviewed. The trend to higher speeds is seen to require consideration of new approaches to balancing through flexural modes.

The major parameters available for control by the designer are shown to be the bearing support properties, and recommendations are made for improving the accuracy of prediction of these properties.

Nonsynchronous excitation is categorized according to the mechanisms producing the forces, and a need is shown for better methods to identify the resulting whirling and vibration, since several of these motions are potentially unstable.

Finally, reasons are given for the predominant use of rolling-element bearings in these engines, and the potential for special applications of oil-film and gas bearings is discussed.

DISCLAIMERS

The findings in this report are not to be construed as an official Department of the Army position unless so designated by other authorized documents.

When Government drawings, specifications, or other data are used for any purpose other than in connection with a definitely related Government procurement operation, the United States Government thereby incurs no responsibility nor any obligation whatsoever; and the fact that the Government may have formulated, furnished, or in any way supplied the said drawings, specifications, or other data is not to be regarded by implication or otherwise as in any manner licensing the holder or any other person or corporation, or conveying any rights or permission, to manufacture, use, or sell any patented invention that may in any way be related thereto.

Trade names cited in this report do not constitute an official endorsement or approval of the use of such commercial hardware or software.

DISPOSITION INSTRUCTIONS

Destroy this report when no longer needed. Do not return it to the originator.

ACCESSION for
NTIS White Section ☑
DDC Buf. Section ☐
UNANNOUNCED ☐
JUSTIFICATION .....
BY .....
DISTRIBUTION/AVAILABILITY CODES
Dist. AVAIL. and/or SPECIAL
A

PREFACE

This report is the result of extensive literature review, experience of the author, and on-site visits to more than a dozen engine contractors, research houses, and universities that are active in the technical field of rotor dynamics. An attempt has been made to restrict the field of coverage to those aspects of rotor dynamics that are directly relevant or applicable to the class of small turboshaft engines under development for U.S. Army aircraft propulsion.

Many of the ideas expressed in the report were not original with the author, but were offered to him in the course of the visits mentioned above. Due credit is not specifically given for all of these in the report, due to proprietary constraints of the contributors, but a list of the contributors is given under Acknowledgements.

As a technical report, this one is somewhat unique in its dearth of mathematical equations. For these, the reader should consult the references noted throughout the report.

ACKNOWLEDGEMENTS

The generous cooperation of engine contractors, research houses (Government and private), and universities in this investigation is greatly appreciated by the author and by the Eustis Directorate, U.S. Army Air Mobility Research and Development Laboratory.

The contributing organizations are as follows:

1. AiResearch Manufacturing Company, Phoenix, Arizona
2. Avco/Lycoming Division, Stratford, Connecticut
3. Air Force Aero-Propulsion Laboratory, Wright-Patterson AFB, Ohio
4. U.S. Army Aeronautical Depot Maintenance Center (ARADMAC), Corpus Christi, Texas
5. Bentley-Nevada Corporation, Minden, Nevada
6. General Motors Corporation, Detroit Diesel Allison Division, Indianapolis, Indiana
7. Franklin Institute, Philadelphia, Pennsylvania
8. General Electric Company, Lynn, Massachusetts, and Evendale, Ohio
9. Mechanical Technology Incorporated, Latham, New York,
10. NASA-Lewis Research Center, Cleveland, Ohio

11. Pratt and Whitney Aircraft, West Palm Beach, Florida

12. Solar Division, International Harvester Company, San Diego, California

13. Teledyne CAE, Toledo, Ohio

14. University of Virginia, Department of Mechanical Engineering, Charlottesville, Virginia

15. Williams Research Corporation, Walled Lake, Michigan

TABLE OF CONTENTS

	Page
PREFACE	1
ACKNOWLEDGEMENTS	1
LIST OF ILLUSTRATIONS	5
INTRODUCTION	6
SCALING FACTORS	6
EFFECT OF FRONT-DRIVE REQUIREMENTS	9
Supercritical Power Turbine Shaft	10
Intershaft Bearings	10
Compressor Spool Design	12
Beryllium Power Turbine Shaft	12
Recommendations	12
PREDICTION OF CRITICAL SPEEDS	13
Design Philosophy	13
Published Analyses and Computer Programs	16
The "Rubber Disk Effect"	21
Effect of Shaft Joints	23
Recommendations	23
HIGH-SPEED BALANCING	23
Multiplane Balancing	24
"In-Place" Balancing	25
Recommendations	26
PREDICTION AND CONTROL OF BEARING SUPPORT PROPERTIES	26
Squeeze Film Bearing Dampers	27
Mechanical Bearing Supports	30
Recommendations	31
NONSYNCHRONOUS EXCITATION	31
Backward Whirl	33
Friction-Induced Whirl	34
Aerodynamic-Induced Whirl	35
Overhung Rotors	35
Recommendations	36

Page

HYDRODYNAMIC BEARINGS 37

Gas Bearings 37
Oil-Film Bearings 38
Recommendations 40

REFERENCES 41

LIST OF ILLUSTRATIONS

Figure		Page
1	Scaled dimensions	7
2	Turbine engine cutaway	11
3	Cylindrical and conical whirl of a rigid rotor on flexible supports	15
4	Flexural whirl on rigid supports - 1st and 2d mode shapes	16
5	Jeffcott rotor	17
6	Response curve for Jeffcott rotor	17
7	Response curve for rigid rotor on flexible supports	18
8	Typical critical speed map	22
9	Disk deformation affecting gyroscopic moments	22
10	Squeeze film bearing damper	28
11	Dependence of intershaft bearing load capacity on rotation direction of both shafts	39

INTRODUCTION

There are a number of special requirements connected with rotor dynamics that are peculiar to rotor-bearing systems in the class of small turboshaft engines being developed for U.S. Army aviation:

1. Increasingly higher shaft speeds. It is desired to increase airflow and power output without increasing physical size.

2. Small physical size (especially in frontal area and wheel diameter) and light weight.

3. Front Drive. It is usually desired to locate the power takeoff shaft out through the front of the compressor section.

4. Maintainability. Individual components making up the rotor-bearing assembly should be easily replaceable.

5. Long Life. It is desired to increase the engine operating life from the presently attained value of about 1500-2000 hours. Frequency of overhauls should be reduced.

Taken on an individual basis, these requirements would generate significant problems for the rotor-bearing design engineer. Taken simultaneously, these requirements are a severe challenge. For example, the combination of requirements 1 and 2 has resulted in a blade tip clearance problem in small engines. The very short blades require extremely small tip to housing clearances to maintain high aerodynamic efficiency and high power output. This in turn requires very small rotor shaft excursions to avoid blade-housing interferences, a design condition that is incompatible with low dynamic bearing loads at high speeds.

From the standpoint of Army aviation, there are two broad objectives to be met in solving rotor dynamics problems through a program of directed research. The first objective is to reduce the magnitude and frequency of rotor dynamics-related failures and required redesign efforts in Army propulsion development programs. The second objective is to improve the reliability and maintainability of future Army aircraft engines in the field through reduction of vibration and dynamic bearing loads.

SCALING FACTORS

An appreciation for the effect of physical size reduction on dynamics can be gained through dimensional analysis of a rotor-bearing sytem. Consider a turbine or compressor wheel assembly (disks, spacers, and blades) centrally located on a flexible shaft, as shown in Figure 1, and assume that it is desired to scale the system down in physical size without reducing airflow rates.

It has been the practice of turboshaft design engineers, with one or two recent exceptions, to maintain operating shaft speeds at least 20% below the first critical speed in shaft bending

(usually the third critical speed). If the bearings of this example are rigidly supported, the bending critical speed is approximated by

$$W_{cr} = d^2 \sqrt{\frac{2.5E}{(M + \frac{\pi}{8}\rho d^2 \ell)\ell^3}} \tag{1}$$

$$= 1.8 \frac{d}{\ell^2} \sqrt{\frac{E}{(0.5 + a_1^2 a_2)\rho}}$$

where
- E = Young's modulus
- M = mass of wheel assembly
- ρ = shaft mass per unit length
- a_1 = d/D
- a_2 = ℓ/L

and d, D, ℓ, L are defined by Figure 1.

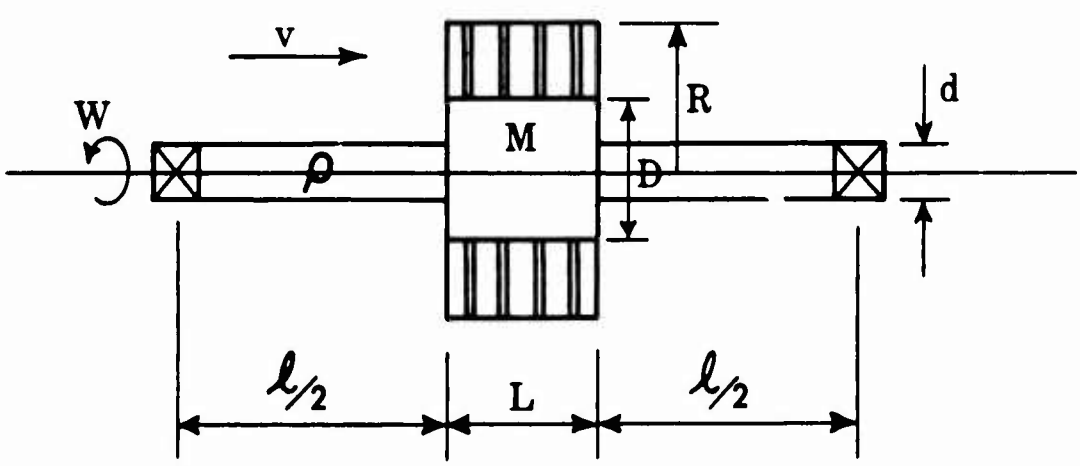

Figure 1. Scaled dimensions.

For a given material and geometric configuration, equation (1) can be rewritten as

$$W_{cr} = \bar{C} \frac{d}{\ell^2} \tag{2}$$

where $\bar{C}$ is a constant.

In addition to the variables defined above, other variables pertinent to a scaling analysis of the rotor bearing system are

W = shaft speed
R = maximum blade radius
v = average axial air velocity
Q = air volume flow rate

The most important dimensionless groups are

$$\pi_1 = a_i \qquad (d/D,\ \ell/L, \text{ etc.})$$

$$\pi_2 = \frac{W}{W_{cr}} \sim \frac{W\ell^2}{\bar{C}d}$$

$$\pi_3 = \frac{WR^3}{Q} \sim \frac{WR}{v}$$

To preserve similitude for performance prediction, all of these π groups must be held constant when engine size is reduced. The first π group determines the "scale factor" n.

$$\frac{d_1}{D_1} = \frac{d_2}{D_2} \quad \text{requires} \tag{3}$$

$$\frac{D_1}{D_2} = \frac{d_1}{d_2} = n$$

where the subscript 1 refers to the large engine and subscript 2 refers to the small engine.

The second π group preserves the same critical speed margin (say, 20%) in the small engine as in the large engine.

$$\frac{W_1\ \ell_1^2}{\bar{C}d_1} = \frac{W_2\ \ell_2^2}{\bar{C}d_2} \quad \text{requires}$$

$$W_2 = nW_1 \tag{4}$$

The third π group requires the same velocity flow profiles in the small engine as in the large engine. If, in addition, the same air volume flow rate is required (assuming equivalent gas temperatures), the third π group requires

$$\frac{W_1 R_1^3}{Q} = \frac{W_2 R_2^3}{Q}, \text{ or}$$

$$W_2 = n^3 W_1 \tag{5}$$

Clearly, equations (4) and (5) are incompatible.

Engine aerodynamic performance requirements are usually given priority over dynamics requirements. Thus, the speed of the small engine, as dictated by equation (5), will be much higher than would be allowed by the critical speed margin, as dictated by equation (4). A very small reduction in engine size can completely eliminate a substantial critical speed margin.

For example, assume a 10% reduction in size of an engine with a 20% critical speed margin. Equation (5) gives (n = 1.11).

$$W_2 = 1.37\ W_1$$

Also,

$$W_{cr_1} = 1.25\ W_1$$

so that

$$W_1 = 0.8 \times W_{cr_1}$$

Then

$$W_{cr_2} = 1.11\ W_{cr_1} = 1.388\ W_1$$

and

$$\frac{W_2}{W_{cr_2}} = \frac{1.37W_1}{1.39W_1} = 0.99$$

The margin has been reduced to only 1%, simply by scaling the engine down 10% in size.

The analysis and example above are greatly simplified, and numerous other factors must be considered in a realistic scaling analysis. Nevertheless, it illustrates one of the basic problems of rotor dynamics in small engines. It is becoming ever more difficult to avoid supercritical operation (shaft speeds through and above bending criticals) in modern small high-speed turboshaft engines.

EFFECT OF FRONT-DRIVE REQUIREMENTS

Another set of design conditions that is difficult to meet in small high-speed engines is the combination of the front-drive requirement and the maintainability requirement. Referring again to Figure 1, the critical speed equation (1) is derivable from the more basic equation

$$W_{cr} = \sqrt{k_s/m} \tag{6}$$

in which k_s is the shaft stiffness effective at the disk (wheel assembly), and m is the effective mass at the disk. It is seen that maintaining a high critical speed depends on maintaining high shaft stiffness. The stiffness of a uniform shaft mounted on rigid supports, relative to a centrally applied load, is

$$k_s = \frac{48EI}{\ell^3} \tag{7}$$

where I is the cross-sectional area moment of inertia; the other symbols were previously defined. It is clear that the stiffness, and consequently the critical speed, is a very strong inverse function of the distance ℓ between bearings.

In a front-drive turboshaft engine, either the distance between the bearings supporting the power turbine shaft cannot be shorter than the length of the compressor spool, or an inter-shaft bearing must be employed, since the power turbine shaft must pass through the inside

of the compressor spool to reach the front of the engine (see Figure 2). Intershaft bearings, supporting relative rotation between the compressor spool and the power turbine shaft, have a history of poor performance and maintainability.

SUPERCRITICAL POWER TURBINE SHAFT

As a result of the above considerations and constraints, the latest turboshaft engine under development for Army helicopters (the T700 for UTTAS) will have its power turbine shaft operating through and above a critical speed in shaft bending.

Safe operation of aircraft rotor-bearing systems at supercritical speeds can be obtained only when at least one of two conditions is reliably met:

1. Accurate high-speed balancing of rotor shaft assemblies. Passage through bending criticals may require multiplane balancing (more than two planes).

2. Provision for significant amounts of external damping.

Satisfaction of condition 1 allows passage through critical speeds without destructive whirl amplitudes. Satisfaction of condition 2 also reduces whirl amplitudes, but additionally, it suppresses several mechanisms of dynamic instability, such as nonsynchronous whirl induced by internal friction, shaft stiffness asymmetry, or aerodynamic excitation. These phenomena will be discussed in later sections.

The alternatives to a supercritical power turbine shaft in small high-speed front-drive engines are

1. Intershaft bearings

2. Gas generator redesign to allow a large-diameter power turbine shaft

3. Use of a power turbine shaft material with a significantly higher stiffness/density ratio than steel (e.g., beryllium)

INTERSHAFT BEARINGS

The most commonly used method for keeping power turbine shafts subcritical is the intershaft bearing. To date, antifriction bearings have been used for this purpose, although a design problem of radial space availability between the inner and outer shafts is often encountered. These bearings have been a source of problems.

The most probable causes of problems with rolling element intershaft bearings are shaft bowing from thermal effects, inacessibility for lubrication, and high DN values with counterrotating shafts.

It is desirable from an aerodynamic design standpoint to have the gas generator shaft and the power turbine shaft rotating in opposite directions, but this obviously increases the DN value of the intershaft bearing. It is therefore a more common design practice to have these shafts corotating (although usually at different speeds).

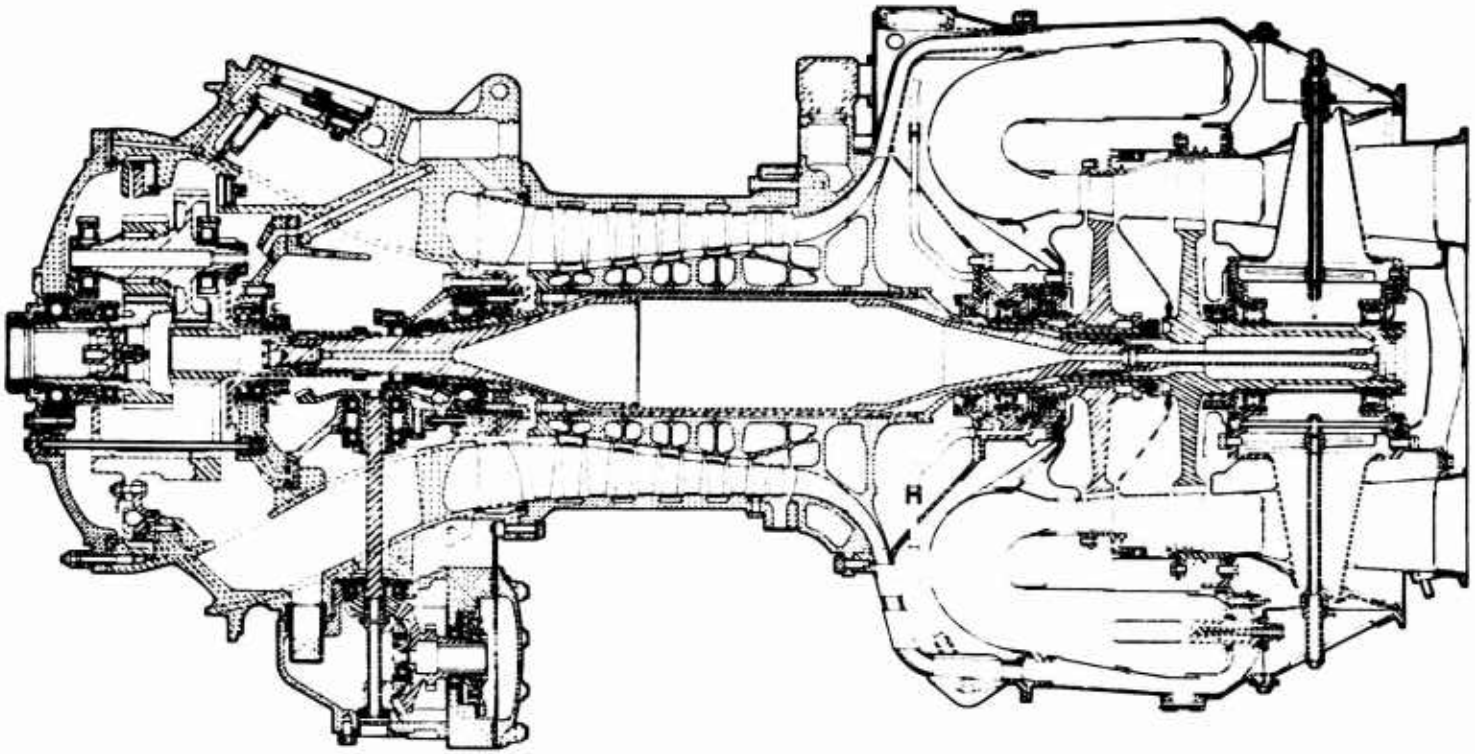

Figure 2. Turbine engine cutaway.

Intershaft bearings also appear to be a source of nonsynchronous vibration, since they can transmit dynamic loads from one shaft to the other at any of the predominant frequencies.

In an effort to solve some of these problems the Air Force Aero-Propulsion Laboratory, Lubrication Branch, has recently supported several programs (at Mechanical Technology Incorporated and AiResearch Manufacturing Company) to develop gas foil bearings for intershaft applications.

Another type of intershaft bearing that has potential merit is the oil-film bearing. At least one engine manufacturer has attempted such an application without success. It should be noted that the load capacity of a film bearing is increased when the bearing corotates with the journal, and that film bearings have minimal radial space requirements. Of course, oil-film bearings also have a much greater load capacity than gas bearings.

COMPRESSOR SPOOL DESIGN

The second alternative to supercritical shaft design involves either an increase of gas generator bearing diameter (with a consequent increase in bearing DN values) to accommodate a larger-diameter power turbine shaft or a bias toward a purely centrifugal compressor design (as in the Pratt and Whitney ST9) to allow a shorter shaft. Either of these options raises the power turbine shaft critical speed, as desired, but they both tend to increase the cross-sectional size of the engine.

It may be of interest to note that a large-diameter compressor spool bearing is compatible with some of the unique requirements of gas-film bearings. For example, gas bearings require large bearing areas and high journal velocities to generate significant load capacity.

BERYLLIUM POWER TURBINE SHAFT

The final alternative has been the subject of some preliminary studies at Williams Research Corporation. Comparison of equations (1) and (2) shows that the shaft critical speed is proportional to $\sqrt{E/\rho}$. Most engineering metals in common use (e.g., steel, aluminum) have almost identical E/ρ values, thus offering little selectivity with respect to critical speed properties.

Engineers at Williams have pointed out that beryllium is an exception to this rule, with an E/ρ value of about three times that of steel or aluminum. In designing a beryllium power turbine shaft, problems to be overcome are the notch sensitivity and brittleness of the material. If these problems could be overcome through proper design or through modification of material properties, a power turbine shaft of this material could operate at significantly higher speeds (perhaps 20%) without passing through resonance in bending.

RECOMMENDATIONS

The following subjects should be investigated in research and development programs in order to optimize the front-drive design of small turboshaft engines:

1. A thorough trade-off study should be made to compare the relative merits and advantages of the several alternative means of achieving front drive in a small high-speed turboshaft engine. A quantitative measure of relative merit should be developed in this study and used to express the results. In contrast to a trade-off study with performance and airflow characteristics as the sole criteria, this study should consider rotor dynamics and its effects on bearing life, maintainability, and reliability. The following design alternatives should be considered:

   - Supercritical power turbine shaft
   - Rolling element intershaft bearing
   - Gas-film intershaft bearing
   - Oil-film intershaft bearing
   - Modified compressor spool design to accept larger-diameter power turbine shaft
   - Beryllium power turbine shaft

2. If the results of recommendation 1 warrant it, a study should be made of the feasibility of using beryllium as a power turbine shaft material in order to raise the shaft bending critical speed to keep engine operation subcritical.

PREDICTION OF CRITICAL SPEEDS

Critical speed analysis was historically and is currently the most important single rational method for rotor-bearing-system design. It allows the designer to avoid resonant conditions in the operating speed range of his machine.

DESIGN PHILOSOPHY

Equation (6) shows that the critical speeds of a rotor-bearing system are determined by the effective stiffness, which may be either in the supports or in the shaft itself, or both, and by the effective mass, which may be rotating with the shaft or vibrating with the bearing support structure. Equation (6) applies strictly to a simple Jeffcott rotor[1,2] with a single critical speed, but the concept of effective stiffness and mass may be carried out to much more complex cases involving bending modes with distributed mass, in which these quantities must be regarded as speed dependent.

---

[1] H. H. Jeffcott, *The Lateral Vibration of Loaded Shafts in the Neighborhood of a Whirling Speed - The Effect of Want of Balance*, Philosophical Magazine, Vol. 37, No. 6, 1919, p. 304.

[2] E. J. Gunter, Jr., *Dynamic Stability of Rotor-Bearing Systems*, NASA-SP-113, 1966.

In discussing stiffness effects, the inverse of stiffness—flexibility—is a more convenient terminology, since zero flexibility is more readily visualized and is more closely approached in engineering structures than zero stiffness. If flexibility is used, it should be remembered that the critical speeds are inversely proportional to the square root of both the effective flexibility and the effective mass.

In rotor-bearing systems, the flexibility may be almost entirely in the bearing supports, in which case we say we have a rigid rotor, or it may be almost entirely in the shaft, in which case we say we have a flexible rotor. The corresponding critical speeds are called rigid-body critical speeds and flexural or bending critical speeds. The reason for the terminology is illustrated in Figures 3 and 4.

Figure 3 shows the two modes of rigid-body motion allowed by soft supports. The first mode, in which the two ends of the rotor whirl in phase, is called cylindrical whirl. The second mode, in which the two ends of the rotor whirl 180° out of phase, is called conical whirl. Most modern turboshaft engines have bearing supports that are designed to be very flexible relative to the shaft and therefore pass through both of these rigid-body criticals at speeds below the operating range of the engine. Since most of the motion in these modes takes place at the bearing-support locations, the resonance can be damped by dissipating energy in specially designed dampers at the bearing supports.

If the supports were made rigid, the first mode would look like Figure 4a, and the second mode would look like Figure 4b. Since there is no deflection of the bearing-support structure, and since the shaft whirls in a constant bowed shape, it is difficult to damp these modes by dissipating energy in dampers. These flexural modes, with rigid supports, are therefore extremely difficult to pass through safely, unless the shaft is precisely balanced for the expected mode shapes.

At sufficiently high speeds, the rotor-bearing system of Figure 3 also displays the flexural response of Figure 4. Thus, a rigid rotor changes into a flexible rotor just by an increase in speed. This is because all real shafts have some flexibility and will therefore have flexural resonances at sufficiently high frequencies, even with soft supports. (If the supports had no stiffness at all, these would be called free-free modes.)

In the design of turboshaft (also turbojet, turbofan) engines to be used as a primary source of flight propulsion for aircraft, engineering design practice has almost always been to keep the flexural critical speeds above the maximum operating speed of the engine. The safety reasons for this should be obvious from the discussion above. The word "almost" is used because the definitions of rigid-body and flexural critical speeds become hazy when the support flexibility and shaft flexibility are of about the same magnitude. Also, it can become very difficult to design a stiff power turbine shaft when the bearing span cannot be made shorter than the length of the compressor spool.

In fact, the latest Army helicopter engine under development (the T700 for UTTAS) has a supercritical power turbine shaft. This will be the first aircraft engine to fly as a primary propulsion source with a turbine rotor shaft expressly designed to operate through and above a flexural critical speed.

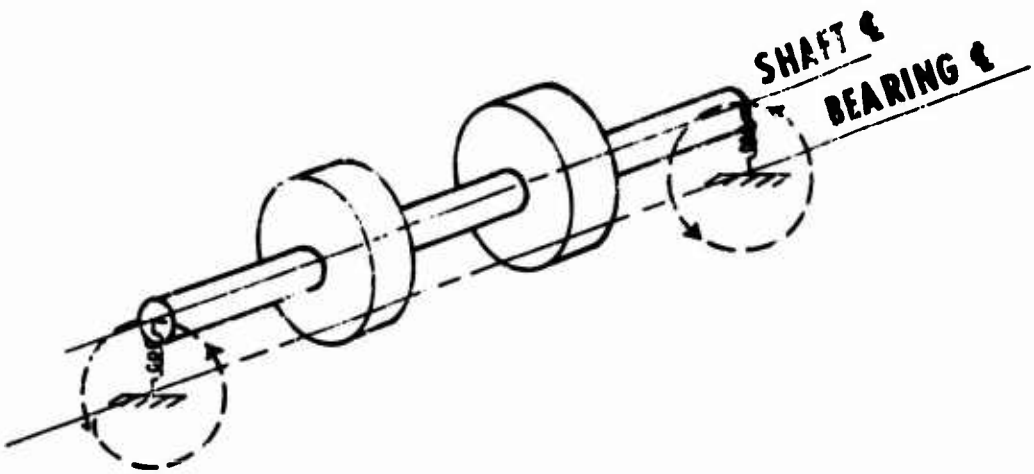

a. Cylindrical whirl

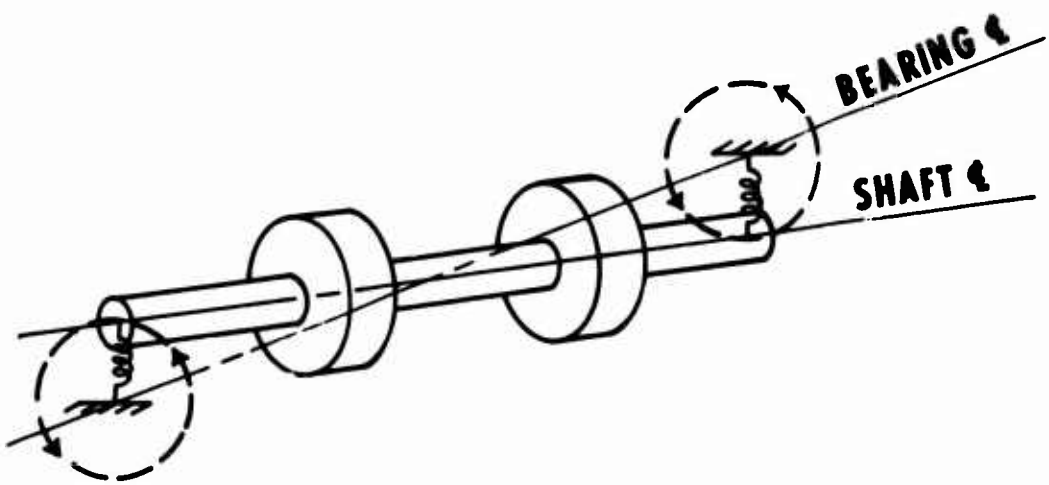

b. Conical whirl

Figure 3. Cylindrical and conical whirl of a rigid rotor on flexible supports.

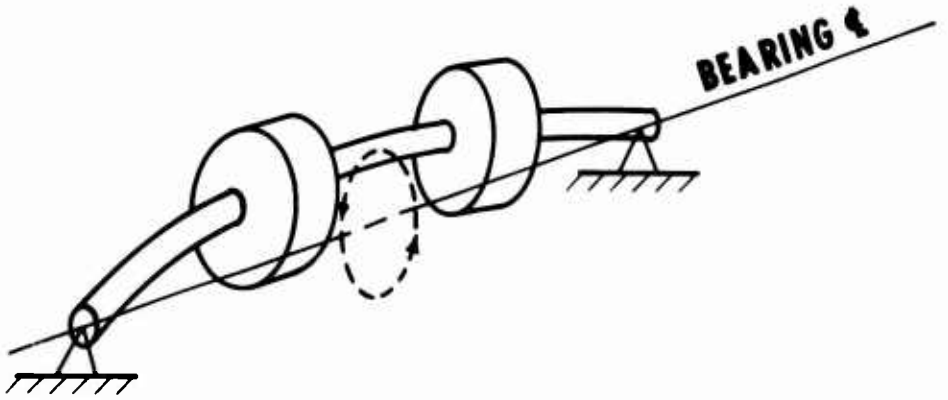

a. 1st mode shape

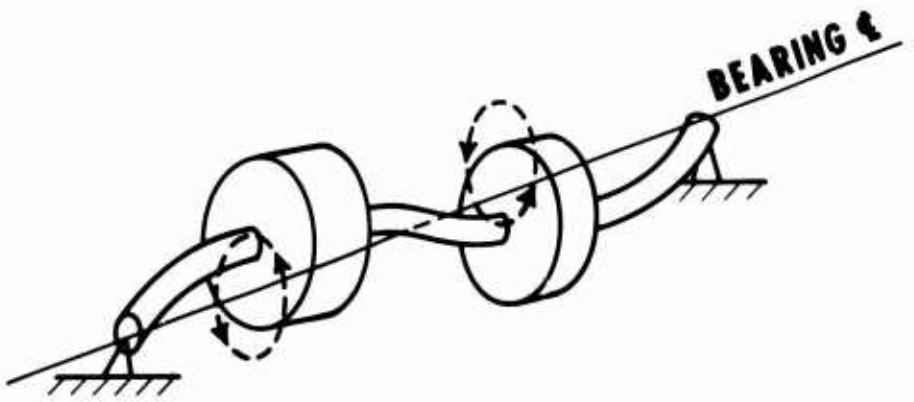

b. 2d mode shape

Figure 4. Flexural whirl on rigid supports - 1st and 2d mode shapes.

PUBLISHED ANALYSES AND COMPUTER PROGRAMS

The original work by Jeffcott[1] was apparently the first published analysis of critical speed response to correctly predict that shaft whirl amplitudes would come back down at speeds above the critical speed. A typical response curve for the simple rotor (Figure 5) analyzed by Jeffcott is shown in Figure 6. For this system the effective stiffness and mass can be predicted quite easily, which allows accurate predictions of the critical speeds.

Note that the ordinate of the curve is shaft whirl amplitude, and the abscissa is shaft speed. The most important information displayed by such a curve is the speed at which the peak response occurs (the critical speed). The predicted whirl amplitude is less important because it is usually inaccurate. (This is because it is determined by the magnitude of system damping, which is extremely difficult to predict.)

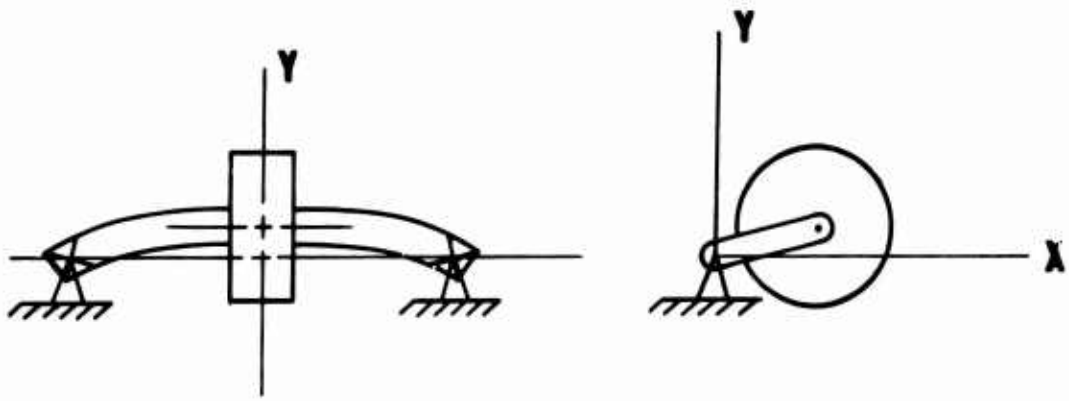

Figure 5. Jeffcott rotor.

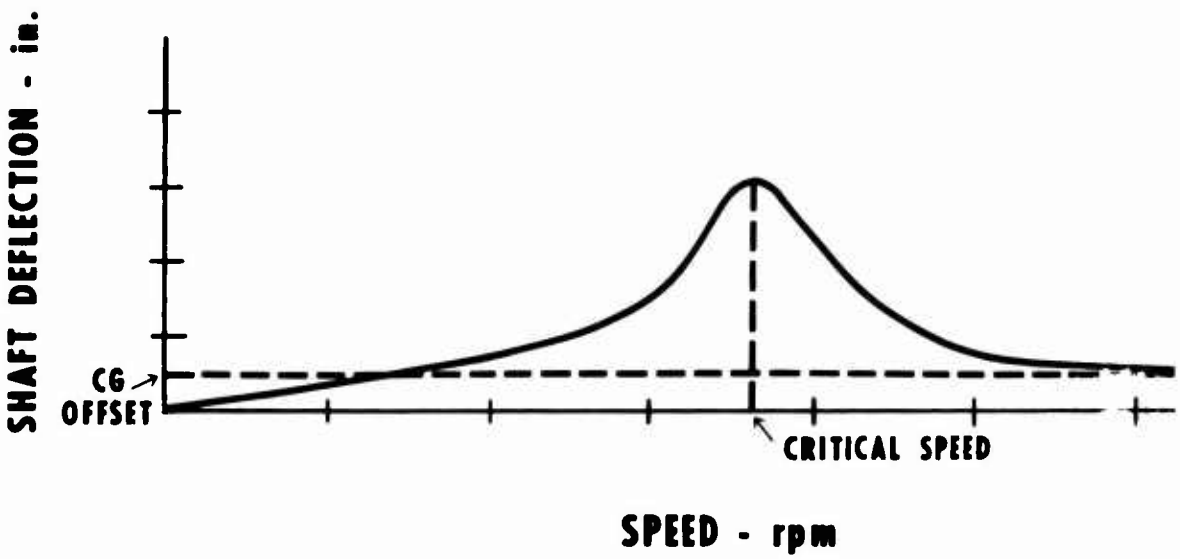

Figure 6. Response curve for Jeffcott rotor.

The response curve of Figure 6 is also valid for the cylindrical rigid-body mode of Figure 3a. However, if the response curve for the rigid rotor is extended out to a speed range that includes the conical critical speed also, the curve will display both peaks as shown in Figure 7. (The shaft deflection measured in the conical mode would depend on the measurement location along the shaft.)

As the speed range of the rotor is further increased, more peaks will be displayed on the response curve, corresponding to the shaft flexural modes. The principal objective of all critical speed analysis is to determine the speeds at which these peaks occur, so that they can be adjusted outside of the operating speed range by proper design.

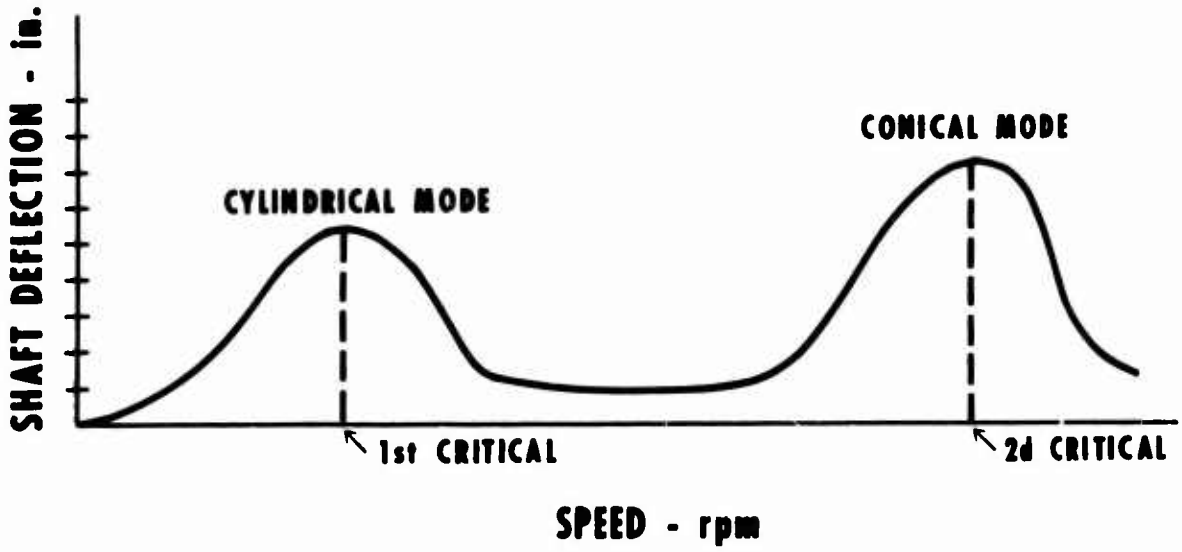

Figure 7. Response curve for rigid rotor on flexible supports.

Although the complexity of modern turboshaft rotor systems has provided an incentive for development of critical speed analyses and computer programs with a high degree of mathematical sophistication, the accuracy of the resultant predictions is completely dependent on the accuracy of the stiffness, mass, and damping data used as input to the calculations.

In turboshaft engine design, one of the easiest rotor-bearing parameters for the engineer to adjust is the stiffness of the bearing supports. Therefore, the critical speed analysis is often used to generate curves like Figure 8 (for example, see reference 3).[3] Since a large number of critical speed calculations must be made to generate such a curve, it follows that the speed of computation can be an important factor in choosing a method of analysis.

Five basic analytical methods (with many variations of each) have been developed to calculate critical speeds of rotor shafts. In their modern form, each has been adapted for use with high-speed digital computers. All of these methods are applicable to rotor-bearing systems much more complex than the Jeffcott rotor, but each has certain advantages and disadvantages that make the choice of method dependent on the type of rotor, the speed range of interest, and the accuracy required. The methods are briefly described as follows:

[3] J. W. Lund, *Stability and Damped Critical Speeds of a Flexible Rotor in Fluid Film Bearings*, ASME Paper No. 73-DET-103, 1973 ASME Design Technology Conference, Cincinnati, Ohio, September 9-12, 1973.

1. The Stodola method, now sometimes called the matrix iteration method.[4,5] The calculation begins with an assumption of the first mode shape, from which the inertia loading due to whirling is calculated at an assumed critical speed. This loading is used to calculate the shaft deflection curve, which is compared with the assumed mode shape. If the agreement is not good the process is repeated using the new calculated deflection curve and a properly adjusted value for the critical speed. A surprisingly small number of iterations will converge to the true first mode shape (eigenvector) and critical speed (eigenvalue). The calculation for higher-order mode shapes is somewhat more complicated, but can be accomplished up through several critical speeds.

   This method is especially well adapted to the use of influence coefficients, which can often be experimentally verified and thus add to confidence in the results.

   The disadvantages of this method are a large requirement for computer storage capacity and a loss of accuracy for the higher-order modes.

   In graphical form, this was the first method used for turboshaft design analysis.

2. The Prohl-Myklestad method.[6,7,8] This method is similar to the Holzer method for torsional vibration analysis; the shaft is divided into a number of sections with the mass of each section concentrated at the ends. Beginning with the boundary conditions at one end of the shaft, the moment, shear, and inertial loading for each section are matched up with adjacent sections until the other end is reached. If the required boundary conditions at this end are not met, then the calculation is repeated for another value of shaft speed (which determines the inertia loading). The critical speeds, which are the only speeds at which shaft deflection can exist without external loads or unbalance, are deduced from a plot of the end boundary conditions versus speed. The speeds at which the boundary conditions are met are the critical speeds.

   This is presently the most commonly used method for critical speed analysis in

---

[4] J. P. Den Hartog, *Mechanical Vibrations*, New York, McGraw-Hill Book Co., 1956, pp. 155-159, 162-165.

[5] J. V. LeGrow, *Multiplane Balancing of Flexible Rotors - A Method of Calculating Correction Weights*, ASME Paper No. 71-VIBR-52, 1971 ASME Vibrations Conference, Toronto, Canada, September 8-10, 1971.

[6] M. A. Prohl, *A General Method for Calculating Critical Speeds of Flexible Rotors*, Transactions of the ASME, Vol. 67, 1945, Journal of Applied Mechanics, Vol. 12, pp. A-142 - A-148.

[7] N. O. Myklestad, *A New Method of Calculating Natural Modes of Uncoupled Bending Vibration of Airplane Wings and Other Types of Beams*, Journal of the Aeronautical Sciences, Vol. 11, No. 2, April 1944, pp. 153-162.

[8] Den Hartog, pp. 229-232.

the turboshaft engine industry. It has recently been modified to include damping effects and to improve computational efficiency.[3, 9]

3. The Rayleigh-Ritz method,[10] also known as the energy method. The maximum strain energy in the rotor shaft is equated to the maximum kinetic energy due to whirling. Since the kinetic energy is a function of shaft speed, the resulting equation can be solved for the critical speed.

   The main disadvantage of this method is that the calculations for strain and kinetic energy require the shaft deflection shape in the desired mode, which is generally not known and must therefore be assumed. However, the accuracy of the method is not very sensitive to errors in this assumption, and there are parametric variation methods available to minimize the error.

4. The characteristic equation method.[11] Substitution of a general exponential solution into the differential equations of motion yields a polynomial in the eigenvalues (critical speeds), the roots of which are the critical speeds.

   This method is not presently used much in the industry, probably because the polynomials obtained for real systems are of high order and are therefore difficult to solve. There has been some recent interest in applying modern algebraic techniques to update this method, however.[12]

5. The numerical integration method, also called the marching method.[13, 14] The equations of dynamics for the rotor-bearing system are solved numerically, marching out the motion from the initial conditions for small steps of increasing time.

---

[9] N. Pilkey and P. Y. Chang, *Avoiding Iterative Searches To Find Critical Speeds of Rotating Shafts With the Transfer Matrix Method*, ASME Paper No. 71-VIBR-53, 1971 ASME Vibrations Conference, Toronto, Canada, September 8-10, 1971.

[10] Den Hartog, pp. 141-147.

[11] R. L. Eshleman and R. A. Eubanks, *On the Critical Speeds of a Continuous Rotor*, Transactions of the ASME, Journal of Engineering for Industry, November 1969, pp. 1180-1188.

[12] N. O. Myklestad, *Seminar on Critical Speed Analysis*, University of Florida, 1970.

[13] J. M. Vance and H. R. Simmons, *Computer Analysis of the Transient Dynamics of Rigid and Flexible Rotors With Bearing Dampers*, Pratt and Whitney Aircraft FTDM-301, September 15, 1969.

[14] R. G. Kirk and E. J. Gunter, *Transient Response of Rotor-Bearing Systems*, ASME Paper No. 73-DET-102, ASME Design Technology Conference, Cincinnati, Ohio, September 9-12, 1973.

This method consumes large amounts of computer time, since the critical speeds are obtained by calculating steady-state amplitudes for a large number of speeds and plotting the results as in Figure 6 or 7. Sufficient computer time must be allowed at each speed for initial transients to die out.

This is the only method, however, that can simulate the nonlinear system. It is therefore valuable for verification of the results from methods 1-4 and for investigation of the effect of nonlinearities on critical speeds.

As shown above, critical speed analysis is now advanced to a highly sophisticated state, with a number of techniques developed to handle practically any type of rotor-bearing system. The references noted give some description of the basic concept and theory for each method.

Each of the turboshaft engine manufacturers and industry-related research houses has its own highly developed computer programs for critical speed analysis based on these methods. Only a few of these programs are well documented in the published literature,[15, 16] however, which tends to perpetuate a certain lack of comparability of results, even for similar problems.

With one exception (described in the following section), critical speed analysis appears to be sufficiently well developed to treat all foreseeable cases in turboshaft rotor-bearing design. Any significant advances to be made in these analytical capabilities will most likely be to improve computational efficiency and reduce computer time costs. The real need is for more accurate determination of rotor system parameters and characteristics to be used as input to the various computer programs.

THE "RUBBER DISK EFFECT"

Gyroscopic effects can be included in all of the critical speed analyses listed above; practically all of the industry computer programs do include these effects. This is usually done by treating compressor and turbine wheels as rigid disks. Until recently, this was a valid assumption since these disks are normally very rigid compared to the shaft.

Some recent problems in accurately predicting critical speeds for extremely high-speed ($N > 60{,}000$ rpm) turbomachinery, and for compressor rotors with long thin blades, tend to suggest that there is a class of machines for which the rigid disk assumption is not valid. The extremely high out-of-plane forces developed on whirling disks at high speed apparently can bend the disk and thus modify the gyroscopic moments. The type of suggested deformation is shown in Figure 9. The terminology "rubber disk effect" was apparently coined by Dr. J. P. Den Hartog during consultations with industry companies on this problem.

---

[15] J. K. Sevcik, *System Vibration and Static Analysis*, ASME Paper No. 63-AHGT-57, Aviation and Space, Hydraulic, and Gas Turbine Conference and Products Show, Los Angeles, California, March 3-7, 1963.

[16] R. T. Bohm, *Designing Complex Turbo Rotor Systems With Controlled Vibration Characteristics*, SAE Paper No. 928B, National Transportation, Powerplant, and Fuels and Lubricants Meeting, Baltimore, Maryland, October 19-23, 1964.

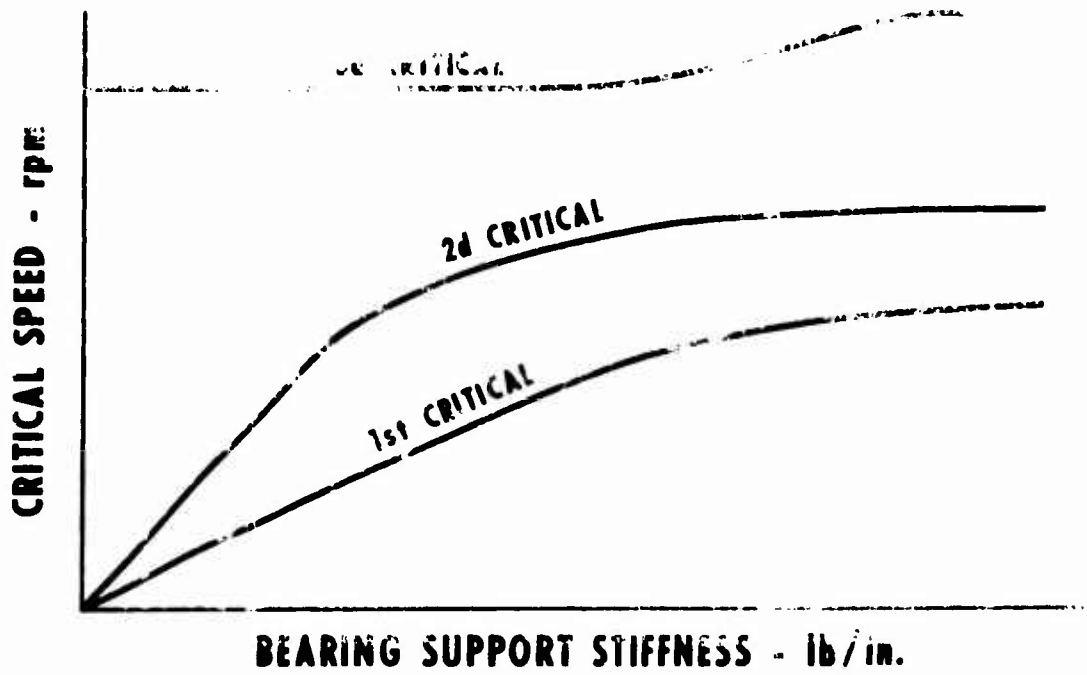

Figure 8. Typical critical speed map.

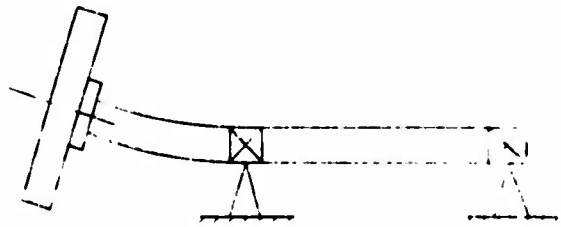

RIGID DISK ON FLEXIBLE SHAFT

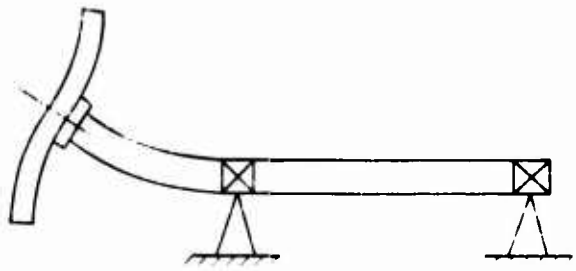

FLEXIBLE DISK ON FLEXIBLE SHAFT

Figure 9. Disk deformation affecting gyroscopic moments.

EFFECT OF SHAFT JOINTS

Turboshaft engine rotors are actually an assembly of shafts, spacers, disks, and blades. In many cases the methods of attachment of these pieces are governed by maintainability considerations that require a disassembly capability, or by thermal expansion clearance requirements that are often satisfied by the use of spline joints.

Critical speed calculations require knowledge of the bending stiffness of the rotor shafts in the system at all points along the shaft. The effects on bending stiffness of the various joints and discontinuities are largely unknown at the present time. Even with welded joints, which are becoming more common in modern engines, the shaft stiffness often cannot be accurately predicted in the design stages. In practice, engineering design analysts make "educated guesses" based on experience for these stiffnesses and later improve the estimates by component testing or by critical speed measurements.

The same type of problem exists for the prediction of stiffness for bearing support structures, but this important subject will be considered separately in a later section.

RECOMMENDATIONS

It is recommended that:

1. The rubber disk effect be investigated analytically to determine the range of applicability for the rigid disk assumption and to properly modify critical speed analysis to include the effects of disk flexibility. The results of the analytical investigation should be verified by test. One possible test method would be to install a very thin uniform disk on a series of test rig rotor shafts with different shaft stiffnesses. The gyroscopic effect on the critical speed could then be determined at the various critical speeds produced by the different shafts.

2. A test program be conducted to experimentally determine the bending stiffness of the various types of shaft joints, shoulders, and splines that are commonly found in small turboshaft engine rotors. Parametric variation studies should be made for those types of joints that are not likely to have constant stiffness properties (for example, spline joint stiffness is probably dependent on the type of spline, the clearance, the applied torque, and the state of lubrication).

HIGH-SPEED BALANCING

As turboshaft engines are made smaller and more powerful, it becomes ever more difficult to keep critical speeds out of the operating range. With bearing supports designed to be soft in order to keep the rigid rotor criticals below idle speed, the first flexural mode is often very close to being a free-free mode. But even with the high frequencies usually associated with such a mode, modern turboshaft engines are operating very close to, and in one or two cases, above, a flexural critical speed. The power turbine shaft bearing span

required by passage through the compressor spool makes this problem even more severe.

In order to operate safely through or near the flexural critical speeds, a rotor shaft must either be well balanced, highly damped, or both damped and balanced to a sufficient degree in combination.

Since synchronous whirl due to unbalance does not produce significant rates of change of shaft flexure, it is difficult or impossible to provide damping in the shaft itself. Support damping may or may not be effective on flexural modes, depending on the bearing locations. Therefore, for at least some cases of supercritical* or near-critical rotor design, a highly refined state of shaft balance becomes mandatory for safe and smooth operation.

MULTIPLANE BALANCING

For a completely rigid rotor it has been shown that two balance planes (locations along the shaft at which unbalance measurements and corrections are made) are both necessary and sufficient for balancing to be effective at all speeds.[17]

Rotor shafts which flex obviously have a state of balance that changes with the magnitude and shape of shaft deflection. There has been some controversy among experts as to exactly how many balance planes are required for flexible rotors, but it is fairly certain that more than two are required[17] and that no more than N + 2 are needed,[18] where N is the number of critical speeds to be passed through.

The NASA-Lewis Research Center has supported a program of research and development at Mechanical Technology Incorporated[19, 20] for high-speed balancing of flexible rotors. This work is based on an influence coefficient method, in which the required correction weights and locations are calculated from experimental data obtained with the rotor running at various speeds with a known trial unbalance weight attached. References 19 and 20

---

*Henceforth, the word "supercritical" will refer to speeds above the first bending critical speed.

[17] Den Hartog, pp. 232-246.

[18] W. Kellenberger, *Should a Flexible Rotor Be Balanced in N or (N + 2) Planes?*, ASME Paper No. 71-VIBR-55, 1971 ASME Vibrations Conference, Toronto, Canada, September 8-10, 1971.

[19] J. M. Tessarzik, *Flexible Rotor Balancing by the Exact Point-Speed Influence Coefficient Method*, NASA CR-72774, MTI-70TR59.

[20] J. M. Tessarzik, R. H. Badgley, and W. J. Anderson, *Flexible Rotor Balancing by the Exact Point-Speed Influence Coefficient Method*, ASME Paper No. 71-VIBR-91, 1971 ASME Vibrations Conference, Toronto, Canada, September 8-10, 1971.

report test verification of the theory, which is based on the work of Goodman,[21] Rieger,[22] and Lund and Tonnesen.[23] Application of the method to a high-speed turboshaft engine is described in a publication by Rieger and Badgley.[24]

A similar method for flexible rotor balancing which uses influence coefficients that are calculated from beam theory, rather than experimentally measured, is reported by LeGrow.[5]

Another method for flexible rotor balancing is the modal method,[18] in which balance planes are selected to have maximum influence on particular flexural modes, and the balancing is done at the flexural critical speeds to minimize the effect of other modes.

Whatever method eventually proves to be best for small turboshaft engine applications, it appears that balancing in more than two planes will become necessary as engine design evolves further into the region where flexural whirl modes are significant.

Flexible rotor balancing requirements will also have their own effect on engine design. The significant factor is that flexural modes must be balanced either in the engine or on specially constructed bearing supports that simulate the engine bearing stiffnesses and locations. The latter approach might be simplified for some applications using very soft supports (without squeeze film dampers) by mounting the rotor free-free in a specially designed balance machine. In any case, however, balancing the rotor outside the engine would be compromised by the necessity for disassembly and reassembly on installation, unless there was a major change in design philosophy to allow installation of assembled rotors in engine cases after balancing.

"IN-PLACE" BALANCING

"In-place" balancing means balancing complete assembled rotors in the engine. This would also require a major change in design philosophy to provide integral probes for measurement of rotor deflection and access ports for balance correction. Major changes always meet with resistance in established industries, of course, and many in the turboshaft engine industry believe that in-place balancing of small turboshaft engines is not a practical proposal. This could be determined by a demonstrator program to convert an existing modern engine, adding the necessary probes and access ports and attempting to apply the latest technology for quick and accurate balancing.

---

[21] T. P. Goodman, *A Least-Squares Method for Computing Balance Corrections*, ASME Paper No. 63-WA-295, 1963.

[22] N. F. Rieger, *Computer Program for Balancing Flexible Rotors*, MTI Technical Report 67 TR68, NASA-Lewis Research Center Contract NA53-10926, September 1967.

[23] J. W. Lund and J. Tonnesen, *Analysis and Experiments on Multiplane Balancing of a Flexible Rotor*, ASME Paper No. 71-VIBR-74, 1971 ASME Vibrations Conference, Toronto, Canada, September 8-10, 1971.

[24] N. F. Rieger and R. H. Badgley, *Flexible Rotor Balancing of a High-Speed Gas Turbine Engine*, SAE Paper No. 720741, National Combined Farm, Construction, and Industrial Machinery and Powerplant Meetings, September 11-14, 1972.

There is a potential side benefit from in-place balancing that could prove to be more valuable than the balancing itself. This is the diagnostic capability provided by the integral proximity probes. Manufacturers of high-speed compressors and other types of rotating machinery have recently begun to use such probes as a routine source of information on bearing condition, state of rotor balance, etc.

For turboshaft engine applications, proximity probes in the hot gas sections would be subjected to an extremely severe environment in terms of temperature and erosion. At present, probes are not available to survive this environment, but they are under active development and should be available within 1 to 2 years from the date of this report.

RECOMMENDATIONS

It is recommended that the following subjects be pursued:

1. Multiplane balancing of power turbine shafts. Since these shafts generally are designed in a way that makes balance corrections in more than one plane exceptionally difficult, a conceptual and experimental study should be made to determine if multiplane flexible balancing techniques can be practically applied to such a shaft. The very difficult problem of balancing such a shaft in place (inside the compressor spool) should be considered.

2. Demonstrator program for in-place balancing. A study should be made to determine if an existing engine can be modified with access ports and integral proximity probes to demonstrate application of the latest multiplane balancing techniques in the engine. Possible impact on engine performance and reliability should be considered. For example, balance correction would require either removal of material in the engine or provision for attachment of balance weights, either of which could affect reliability.

PREDICTION AND CONTROL OF BEARING SUPPORT PROPERTIES

The two bearing support properties of interest are stiffness and damping. Most modern engines are designed with soft supports (low stiffness) to place the rigid rotor critical speeds below the operating range. Support damping can reduce or eliminate the peaking synchronous response to unbalance at the critical speeds (resonance), and can suppress many of the nonsynchronous responses and associated instabilities.

Asymmetry and cross-coupling are important aspects of support properties, as they have a profound effect on rotor dynamics, especially with regard to stability. An example of asymmetry is different bearing support stiffnesses in the horizontal and vertical directions. An example of cross-coupling is damping force generated in the horizontal direction by motion in the vertical direction.

The influence of support properties on rotor shaft dynamics is well understood by experts in the field, the subject having been extensively researched both analytically and experimentally.[25-31] The real problem at present is a lack of capability to reliably and accurately predict support characteristics from design data.

SQUEEZE FILM BEARING DAMPERS

The squeeze film bearing damper is probably the most significant development of the last decade affecting high-speed rotor dynamics. Figure 10 illustrates the principle of operation.

The terminology "squeeze film" is descriptive of what takes place in the annular clearance space, to which oil is continuously supplied. In a typical turboshaft application, the clearance space is located between the damper housing bore and the outer race of a rolling element bearing, which is therefore a loose fit in the damper housing. The rotating unbalance of the rotor induces the bearing to orbit within the damper housing. In a properly designed damper, metal-to-metal contact is prevented by hydrodynamic support of the oil film. The bearing race is normally constrained by a key to prevent rotation.

The oil-film support provides both low dynamic stiffness and high damping (energy dissipation). The results of a good design are greatly reduced dynamic bearing loads, elimination of resonance, and in some cases even a reduction of whirling amplitudes. The latter result is intuitively surprising to many; it is often difficult to convince a machine designer that he needs to provide a loose bearing housing clearance in order to reduce whirling amplitudes.

---

[25] E. J. Gunter, *Influence of Flexibly Mounted Rolling Element Bearings on Rotor Response, Part I - Linear Analysis*, ASME Journal of Lubrication Technology, January 1970, pp. 59-75.

[26] R. Williams, Jr., and R. Trent, *The Effects of Nonlinear Asymmetric Supports on Turbine Engine Rotor Stability*, SAE Paper No. 700320, National Air Transportation Meeting, New York, N. Y., April 20-23, 1970.

[27] H. F Black and A. J. McTernan, *Vibration of a Rotating Asymmetric Shaft Supported in Asymmetric Bearings*, Journal of Mechanical Engineering Science, Vol. 10, No. 3, 1968, p. 252.

[28] W. R. Foote, H. Poritsky, and J. J. Slade, Jr., *Critical Speeds of a Rotor With Unequal Shaft Flexibilities, Mounted in Bearings of Unequal Flexibility - I*, ASME Journal of Applied Mechanics, June 1943, Transactions, pp. A-77 - A-84.

[29] E. E. Messal and R. J. Bonthron, *Subharmonic Rotor Instability Due To Elastic Asymmetry*, ASME Paper No. 71-VIBR-57, 1971 ASME Vibrations Conference, Toronto, Canada, September 8-10, 1971.

[30] B. Sternlicht, *Stability and Dynamics of Rotors Supported on Fluid-Film Bearings*, ASME Journal of Engineering for Power, October 1963, pp. 331-342.

[31] E. H. Hull, *Shaft Whirling as Influenced by Stiffness Asymmetry*, ASME Journal of Engineering for Industry, May 1961, pp. 219-226.

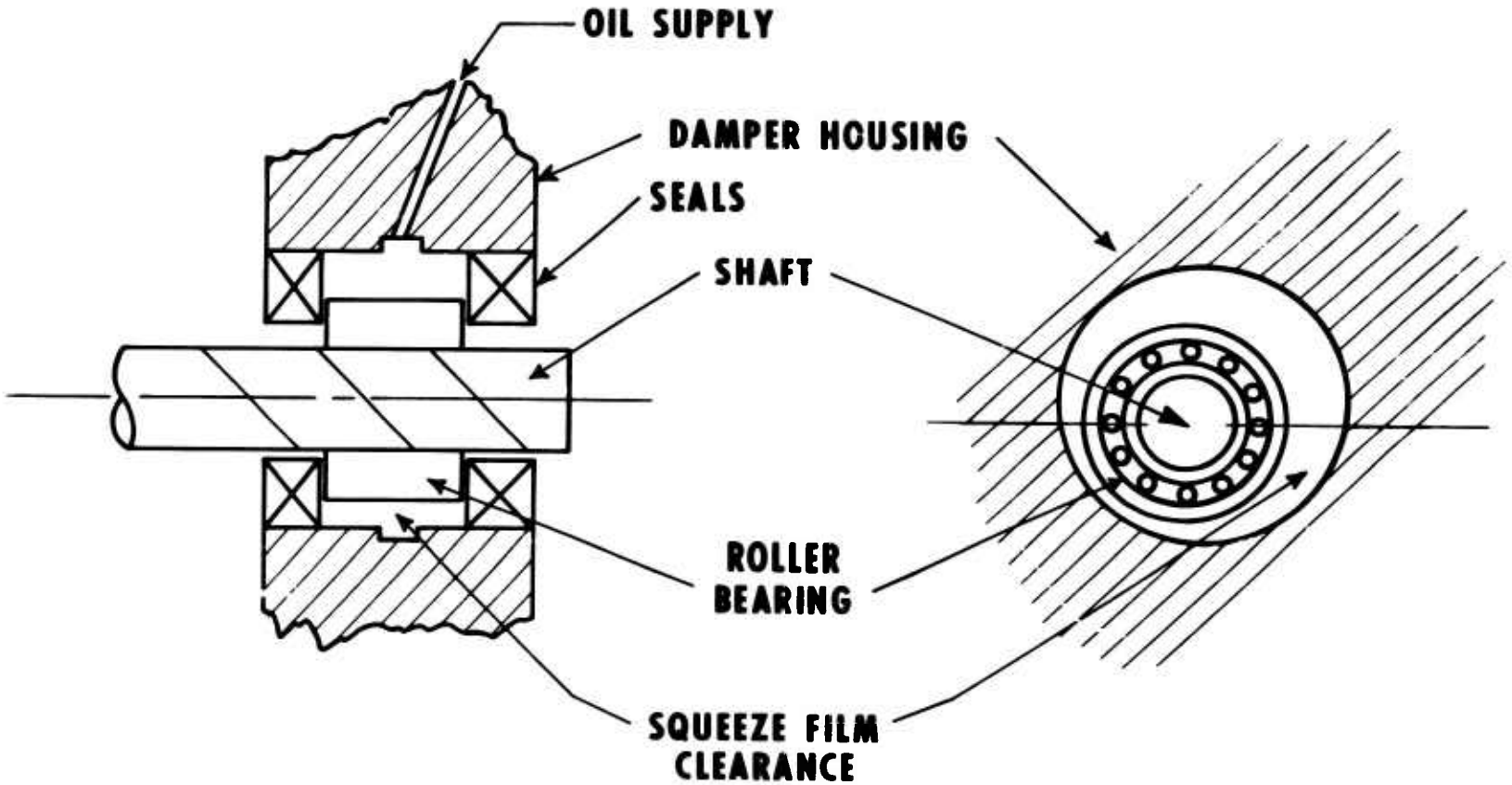

Figure 10. Squeeze film bearing damper.

In the above description, the phrases "properly designed damper" and "good design" are important. At present, it is not possible to predict damper performance from design data with confidence. The good designs that have been obtained are largely based on empirical information from earlier designs. The same can probably be said about the bad designs.

A squeeze film damper is basically an oil-film bearing with zero rotation. The damper force response should therefore be predictable from hydrodynamic bearing theory. For example, Lund[32] has defined eight coefficients that give the forces in terms of journal position and motion in Cartesian coordinates. The problem is that these coefficients are predicted differently by each of the various theoretical models based on certain assumptions for analytical simplification; that is, "long bearing" theory,[33] "short bearing" theory,[34] and various assumptions about the circumferential location of the beginning and end of the oil film (the boundary conditions).

Most experimental data for oil-film bearings has been obtained for the case with pure rotation (no orbiting), which is the antithesis of a squeeze film damper.

Whenever an attempt is made to design a damper on a scientific or analytical basis, it is usually based on the work of Cooper,[35] who gives mostly qualitative results of a parametric study made with an unbalanced rotor supported by a squeeze film. The most convincing and indisputable fact shown by Cooper's experiments is that any restriction of damper orbiting by mechanical stops or bumpers produces a tremendous increase in bearing loads, perpetuates resonance that would not occur without the bumper, and generally destroys the good effects of the damper. Yet there are still designers in the industry who insist on mechanical stops "to limit rotor excursions".

In 1973, Jones[36] published the results of an experimental study of squeeze film hydrodynamics. He reported a reasonable verification of short bearing theory except for cases with large eccentricity (bearing journal far off center). The main shortcoming of this study is that the apparatus motion was restricted to orbiting about the damper centerline, a condition rarely obtained in engines unless the damper is coupled with a stiff mechanical support spring.

---

[32] J. W. Lund and E. Saibel, *Oil Whip Whirl Orbits of a Rotor in Sleeve Bearings*, ASME Journal of Engineering for Industry, November 1967, pp. 813-822.

[33] Y. Hori, *A Theory of Oil Whip*, ASME Journal of Applied Mechanics, June 1959, pp. 189-198.

[34] G. B. Dubois and F. W. Ocvirk, *Analytical Derivation and Experimental Evaluation of Short-Bearing Approximation for Full Journal Bearings*, Report 1157, National Advisory Committee for Aeronautics, 1953. (Also see NACA TN 2808 and TN 2809, 1952.)

[35] S. Cooper, *Preliminary Investigation of Oil Films for the Control of Vibration*, Institution of Mechanical Engineers (England), Lubrication and Wear Convention, 1963.

[36] M. G. Jones, *An Experimental Investigation of Squeeze Film Hydrodynamics*, Report No. R.320, National Gas Turbine Establishment, Ministry of Defence (England), January 1973.

Since the squeeze film damper is a nonlinear device, the possibility exists that several shaft motions can satisfy dynamic equilibrium. In fact, an analytical and experimental investigation by White[37] has confirmed the existence of jumps from one stable orbit to another of different magnitude, a phenomenon originally suggested by Cooper's work.[35]

Some manufacturers and turbomachinery research houses have developed computer simulations of the transient dynamics of engine rotors on squeeze film supports.[13, 14] Although such simulations help one to understand the effects of changes in various design parameters, little confidence can be placed in their quantitative predictions until the hydrodynamic response portion of the analytical model is either verified or appropriately modified by experimental studies.

MECHANICAL BEARING SUPPORTS

Understandably, some engineers in the industry prefer not to rely on the imprecisely known characteristics of squeeze film dampers to provide the required support properties for control of rotor dynamics. Generally speaking, the stiffness of mechanical supports is easier to control, even if not so easy to predict in the preliminary stages of design. The damping of such supports is, of course, very predictable, usually being very low.

Even when squeeze films are used, they often are mounted in series or parallel with mechanical spring supports. Mechanical bearing supports are usually designed to provide the minimum stiffness practical while still maintaining the required strength and reliability. Most fall roughly into one of three categories:

1. The squirrel cage, so named because of its appearance, made as a cylinder of thin metal ribs.

2. Welded rod support. In this design the bearing mount is cantilevered on several metal rods parallel to the shaft centerline.

3. Corrugated metal ring. A variety of these designs are all constructed to fit snugly around the outer bearing race and provide a mechanical cushion through deflection of small segments or protruding elements.

The stiffness properties of all these designs can be controlled with good accuracy by testing and iterative redesign as required. The capability to predict these properties analytically in preliminary design stages needs to be improved. One way of doing this would be to standardize some designs throughout the industry, although the practicality of accomplishing this in a competitive environment is questionable.

Another type of mechanical bearing support used to provide both low stiffness and some degree of damping is the common "O-ring". Grooves in the bearing housing bore are made to hold the "O-rings" so that they are compressed into an elliptical shape when the roller bearing outer race is inserted. The "O-rings" are made of an elastomeric material, and their fatigue properties and thermal degradation properties are not well known for this type

[37] D.C. White, *The Dynamics of a Rigid Rotor Supported on Squeeze Film Bearings*, Conference on Vibrations in Rotating Systems, London, Proceedings, Institution of Mechanical Engineers, February 14-15, 1972.

of application. At present they are considered to be suitable only for short life application in the cold (compressor) section of turboshaft engines. Further research and development could extend the range of applications for "O-ring" supports; their greatest advantage is that they provide damping along with stiffness properties that should be accurately predictable.

RECOMMENDATIONS

The following research is recommended:

1. Experimental determination of squeeze film bearing damper force response. The eight hydrodynamic bearing coefficients defined by Lund,[32] or their equivalent, should be experimentally determined for damper configurations typically used in turboshaft engines. An analytical model should be developed and verified to predict these coefficients from design data. The study should include the case of bearing orbits not about the damper centerline. Variables of potential interest are clearance, effective bearing length, oil supply pressure, viscosity, orbit speed, and leakage rate. The squeeze film forces should be separated from forces generated by seals and/or parallel springs.

2. Prediction and control of mechanical bearing support stiffness. A few of the spring mount designs commonly in use for turboshaft rotor bearing support should be selected for a broad range of applications. These designs should then be analyzed, and modified if necessary, so that their support stiffness properties are predictable from data representing a minimum number of design variables. The prediction capability thus generated might serve to standardize a basic bearing support design throughout the industry.

NONSYNCHRONOUS EXCITATION

Rotor-bearing-system response to rotor unbalance is called synchronous whirl because it is characterized by rotor orbiting at shaft speed. Synchronous whirl is usually in the same direction as shaft rotation (forward), but can also be backward in direction. All other motions executed by the rotor-bearing system can be classified either as nonsynchronous whirl or as nonsynchronous vibration. These motions are often self-excited by rather subtle mechanisms, and are sometimes associated with the possibility of dynamic instability.* This latter characteristic makes an understanding of nonsynchronous excitation necessary to insure safe designs for flight propulsion.

Nonsynchronous whirl has only recently been widely recognized in turboshaft engines. In fact, some of the vibration and dynamic measurement techniques that have been in common use by the industry were probably not capable of registering nonsynchronous response, so intense was the focus of interest on synchronous response to unbalance.

*Dynamic instability is defined here as a motion that becomes unbounded (until system limits are exceeded) either with time or with some normally variable parameter of the system, following an initial perturbation.

The major sources of nonsynchronous excitation that have been identified and studied by researchers to date are:

1. Asymmetric stiffness properties of shafts or bearing supports[26-29, 31, 38-41]

2. Internal friction in shafts or other rotating parts[26, 42-46]

3. Aerodynamic or gas flow excitation[47, 48]

---

[38] H. D. Taylor, *Critical Speed Behavior of Unsymmetrical Shafts*, ASME Journal of Applied Mechanics, June 1940, Transactions, pp. A-71 - A-79.

[39] R. C. Arnold and E. E. Hoft, *Stability of an Unsymmetrical Rotating Cantilever Shaft Carrying an Unsymmetrical Rotor*, ASME Paper No. 71-VIBR-58, 1971 ASME Vibrations Conference, Toronto, Canada, September 8-10, 1971.

[40] S. H. Crandall and P. J. Brosens, *On the Stability of Rotation of a Rotor With Rotationally Unsymmetric Inertia and Stiffness Properties*, ASME Journal of Applied Mechanics, December 1961, pp. 567-570.

[41] D. E. Newland, *On the Stability of Rotation of a Rotor With Rotationally Unsymmetric Inertia and Stiffness Properties* (Brief Note), ASME Journal of Applied Mechanics, December 1964, pp. 723-724.

[42] F. F. Ehrich, *Shaft Whirl Induced by Rotor Internal Damping*, ASME Journal of Applied Mechanics, June 1964, pp. 279-282.

[43] A. Seirig, *Whirling of Shafts in Geared Systems*, ASME Journal of Engineering for Industry, May 1967, pp. 278-283.

[44] E. J. Gunter, Jr., *The Influence of Internal Friction on the Stability of High Speed Rotors*, ASME Journal of Engineering for Industry, November 1967, pp. 683-688.

[45] E. J. Gunter, Jr., and P. R. Trumpler, *The Influence of Internal Friction on the Stability of High Speed Rotors With Anisotropic Supports*, ASME Journal of Engineering for Industry, November 1969, pp. 1105-1113.

[46] J. M. Vance and J. Lee, *Stability of High Speed Rotors With Internal Friction*, ASME Paper No. 73-DET-127, ASME Design Technology Conference, Cincinnati, Ohio, September 9-12, 1973.

[47] F. F. Ehrich, *An Aeroelastic Whirl Phenomenon in Turbomachinery Rotors*, ASME Paper No. 73-DET-97, ASME Design Technology Conference, Cincinnati, Ohio, September 9-12, 1973.

[48] J. S. Alford, *Protecting Turbomachinery From Self-Excited Whirl*, ASME Journal of Engineering for Power, October 1965, pp. 333-344.

4. Excitation from fluids trapped within rotor shafts[49, 51]

5. Rubbing friction between radial surfaces of rotors and stator housings[52, 53]

6. Excitations from other rotating components in the same engine structure (e.g., excitation of a power turbine rotor from unbalance of a compressor rotor)

7. Excitations from gears, at the gear tooth mesh frequencies

BACKWARD WHIRL

Backward whirl is one of the least-understood phenomena of rotor dynamics. Den Hartog[54] states that he doubted the possibility of its existence until he finally observed it in a model. Although Den Hartog concluded that backward whirl is only of minor importance, more recent experience in the turboshaft engine industry indicates otherwise. Large amplitudes of backward whirl have been observed in engines, with the source of excitation traced to the ball bearing effects originally identified by Yamamoto.[55]

---

[49] F. F. Ehrich, *The Influence of Trapped Fluids on High Speed Rotor Vibration*, ASME Journal of Engineering for Industry, November 1967, pp. 806-812.

[50] R. J. Fritz, *The Effects of an Annular Fluid on the Vibrations of a Long Rotor, Part 1 - Theory*, ASME Paper No. 70-FE-30, Fluids Engineering, Heat Transfer, and Lubrication Conference, Detroit, Michigan, May 24-27, 1970.

[51] R. J. Fritz, *The Effects of an Annular Fluid on the Vibrations of a Long Rotor, Part 2 - Test*, ASME Paper No. 70-FE-31, Fluids Engineering, Heat Transfer, and Lubrication Conference, Detroit, Michigan, May 24-27, 1970.

[52] I. C. Begg, *Friction Induced Rotor Whirl - A Study in Stability*, ASME Paper No. 73-DET-106, ASME Design Technology Conference, Cincinnati, Ohio, September 9-12, 1973.

[53] F. F. Ehrich, *The Dynamic Stability of Rotor/Shaft Radial Rubs in Rotating Machinery*, ASME Journal of Engineering for Industry, November 1969, pp. 1025-1028.

[54] Den Hartog, p. 265.

[55] T. Yamamoto, *On Critical Speeds of a Shaft Supported by Ball Bearings*, ASME Journal of Applied Mechanics, June 1959, pp. 199-204.

A number of critical speed studies[3, 11, 31, 56] have shown that backward whirl is an eigen value (natural frequency) of rotor bearing systems. Since any shaft unbalance always rotates forward with the shaft, backward whirl would not seem to be excited by unbalance. However, it has been shown that it is excited when the bearing support stiffness is asymmetric,[57] and it is also believed to be associated with gyroscopic moments.[58]

References 2 and 56 disagree as to the possibility of the existence of backward whirl when damping is present in the system.

Radial rub between rotors and stator housing is the most easily visualized mechanism driving backward whirl, and this may actually be the source of most cases occurring in turboshaft engines. Inspection of Army helicopter engines being rebuilt at the U. S. Army Aeronautical Depot Maintenance Center provides proof that such rubs are frequent and pronounced in these engines.

FRICTION-INDUCED WHIRL

The practical realization of design advantages to be gained in small turboshaft engines by operation at supercritical speeds has been prevented by (1) the necessity to pass through the resonances at the critical speeds and (2) the instabilities of self-excited whirl associated with high-speed operation.

If it is assumed that the first problem can be overcome through refined balancing techniques and the provision of external damping, self-excited whirl remains as a potentially more serious problem that can destroy a rotor-bearing system whenever regions of instability are encountered.

Nonsynchronous whirl induced by internal friction is probably the most common type of self-excited whirl in turboshaft engines. The nature and cause of this phenomenon have been rigorously analyzed by Gunter[44] and Ehrich.[42]

A subsequent investigation by Gunter and Trumpler[45] shows that the threshold speed of instability can be increased by asymmetric bearing supports. These analyses also confirm earlier experimental findings that both increased bearing support flexibility and external damping raise the threshold speed of instability. Since squeeze film dampers provide both of these effects simultaneously, it is to be expected that friction-induced whirl could be suppressed by their use.

The author of this report has investigated the effect of rotor unbalance, shaft stiffness asymmetry, and the location of external damping in the system on friction-induced whirl.[46]

---

[56] T. R. Kane, *An Addition to the Theory of Whirling*, ASME Journal of Applied Mechanics, September 1961, pp. 383-386.

[57] W. T. Thomson, *Vibration Theory and Applications*, Prentice Hall, Englewood Cliffs, N. J. 1965, pp. 84-86.

[58] R. B. Greene, *Gyroscopic Effects on the Critical Speeds of Flexible Rotors*, ASME Journal of Applied Mechanics, Transactions, Vol. 70, 1948, pp. 369-376.

It was found that aerodynamic drag can be an important source of external damping to suppress friction-induced whirl, whenever stiff bearing mounts are used, because bearing supports cannot dissipate significant amounts of energy unless they are flexible enough to move.

The most important parameter affecting the threshold speed of instability for friction-induced whirl is the ratio of internal friction to external damping. For large values of this parameter, rotor-bearing operation is unstable at all speeds above the critical speed associated with the motion producing the internal friction. For values of about unity (external damping equal to internal friction), the threshold speed is about twice the critical speed. Thus, it is seen that with a reliable and effective mechanism for external damping, rotor-bearing systems could be safely operated at speeds up to about 80% above the critical speed.

The problem in turboshaft engine design is that neither external damping nor internal friction can be reliably predicted from design data, or even after hardware already exists. At present, these variables can only be measured indirectly from their dynamic effects on the system.

There are numerous potential sources of internal friction in a typical turboshaft engine rotor assembly. In addition to hysteresis of the material itself, shaft splines, shrink fits, and bolted connections are all capable of generating friction forces as the rotor-shaft assembly flexes. Some experimental data giving at least the relative magnitudes of friction generated by these mechanisms could be very helpful to the rotor dynamics engineer for preliminary design analysis.

AERODYNAMIC-INDUCED WHIRL

Rotor whirling induced by aerodynamic forces on blades and seals is such a complex phenomenon that research to date has been confined mostly to hypothesizing qualitative theories to explain it. It can be surmised that an analogy to "oil whip" in hydrodynamic bearings might exist for bladed disks in cylindrical housings with small tip clearances, or that a similar analogy to "propeller whirl flutter" might exist for compressor stages with long blades.

Combined experimental measurements of rotor motion and circumferential pressure distributions are needed to establish the relationships that exist between disk whirling and aerodynamic forces.

OVERHUNG ROTORS

This subject is isolated here because there has been a long history of dynamics-related problems associated with overhung rotor disks which are almost certainly not associated with synchronous response to unbalance. Figure 9 illustrates the overhung rotor disk configuration that is characterized by a disk having shaft bearings on only one side.

The problems with overhung rotor disks have been recognized by numerous investigators, and there is a considerable body of literature addressing the subject.[39, 40, 58, 59] Yet the problems seem to persist.

An exaggerated example of such problems is the spin pit test rig configuration used by most turboshaft engine manufacturers to spin disks up to high speed for burst tests or for proof tests. The disk is suspended vertically in an underground pit (to minimize danger to surroundings) from an extremely flexible quill shaft to insure supercritical operation and thus minimize whirling. Occasionally, and yet persistently, the test is ruined by premature failure of the rotor-shaft system from violent shaft whirling. These failures seem to be unaffected by rotor balance, and would therefore appear to result from some type of dynamic instability.

In turboshaft engines, especially in first compressor stages, or fans, backward whirl and nonsynchronous whirl appear to occur more prevalently when the disks are overhung. Apparently then, either the results of the research in the literature cited are not being consistently applied to engine design, or a still unknown mechanism is producing these effects. The former proposition is more likely.

RECOMMENDATIONS

It is recommended that the following subjects be researched:

1. Causes of backward whirl. A combined analytical and experimental study should be made to identify all possible conditions and excitations capable of producing backward whirl. The analytical study should include the effects of damping and gyroscopic moments. Predicted eigenvalues for backward whirl should be evaluated in terms of likelihood of excitation. Dynamic stability should be investigated for all possible cases. The experimental study should be designed to verify the conditions producing backward whirl as predicted by analysis, including predictions that are currently in the literature but that have never been experimentally verified. A special study should be made of rotor friction rubs as a source of excitation. Some variables of interest for this study are rotor-stator clearance, coefficient of friction, and speed.

2. Mechanisms of internal friction. A primarily experimental study should be made to quantitatively assess the magnitudes of internal friction that can be produced by shaft splines, press fits, bolted connections, and any other types of joints commonly used in turboshaft rotor assemblies. The measured internal friction should be compared with the magnitude of external damping estimated from measurements of vibratory response.

3. Aerodynamic excitation of rotor whirl. Circumferential pressure distributions and rotor whirl should be measured simultaneously in an experimental compressor rig with adjustable parameters such as blade tip clearance, stator configuration,

[59] T. C. Huang and F. C. C. Huang, *On Precession and Critical Speeds of Two-Bearing Machines With Overhung Weight*, ASME Paper No. 67-VIBR-19, 1967 ASME Vibrations Conference, Boston, Massachusetts, March 29-31, 1967. (Also published in the ASME Journal of Engineering for Industry.)

and inlet pressure. If configurations are found which produce aerodynamic-induced whirl, an attempt should be made to analytically simulate the phenomenon and develop a prediction capability.

4. Dynamic stability of overhung (cantilevered) rotors. An analytical study should be made to determine possible causes of the seemingly inordinate number of problems with overhung rotors in high-speed systems. The study should be done with access to a large bank of experience with such systems, and should begin with a classification of rotors having a history of failures or problems in order to identify critical parameters. One such critical parameter might be the ratio of polar moment of inertia to transverse moment of inertia of the overhung disk. If the analytical study reveals likely causes of dynamic instability, they should be verified by experiment.

HYDRODYNAMIC BEARINGS

Hydrodynamic bearings provide rotor shaft support through pressure in a thin fluid film between the shaft journal and bearing. The fluid may be either a gas (usually air) or a liquid (usually oil). The pressure may be self-generated from rotation of the journal (wedge effect) or may be supplied externally from an auxiliary pump or compressor. The chief distinguishing characteristic of hydrodynamic bearings, as opposed to boundary-lubricated bearings, is that metal-to-metal contact between the journal and bearing does (should) not occur except possibly during startup or shutdown.

Rolling-element bearings are firmly entrenched in aircraft turboshaft engine design, and the author knows of only one case in which a hydrodynamic bearing has been successfully used for this application. The two principal reasons for this are that (1) a rolling-element bearing usually fails in a gradual way, which gives warning time before aircraft power is lost, and (2) rolling-element bearings reject less heat to the lubricant, thus allowing a smaller heat exchanger for cooling.

The latter comparison does not apply to gas bearings. This, and the reliable availability of lubricant for a gas bearing, has provided considerable incentive for research and development of gas bearings for turboshaft applications.

The chief advantage that all hydrodynamic bearings offer is long life. Gas bearings also offer extremely low friction coefficients, although they have a much smaller load capacity for their size than fluid film bearings.

GAS BEARINGS

Reference 60 describes a feasibility study performed by Mechanical Technology Incorporated (MTI) and Pratt and Whitney Aircraft for the Eustis Directorate, U.S. Army Air Mobility

[60] P. W. Curwen, *Feasibility of Gas Bearings for Small High-Performance Aircraft Gas Turbines*, USAAVLABS Technical Report 68-87, U. S. Army Aviation Materiel Laboratories, Fort Eustis, Virginia, March 1969, AD 684956.

and inlet pressure. If configurations are found which produce aerodynamic-induced whirl, an attempt should be made to analytically simulate the phenomenon and develop a prediction capability.

4. Dynamic stability of overhung (cantilevered) rotors. An analytical study should be made to determine possible causes of the seemingly inordinate number of problems with overhung rotors in high-speed systems. The study should be done with access to a large bank of experience with such systems, and should begin with a classification of rotors having a history of failures or problems in order to identify critical parameters. One such critical parameter might be the ratio of polar moment of inertia to transverse moment of inertia of the overhung disk. If the analytical study reveals likely causes of dynamic instability, they should be verified by experiment.

HYDRODYNAMIC BEARINGS

Hydrodynamic bearings provide rotor shaft support through pressure in a thin fluid film between the shaft journal and bearing. The fluid may be either a gas (usually air) or a liquid (usually oil). The pressure may be self-generated from rotation of the journal (wedge effect) or may be supplied externally from an auxiliary pump or compressor. The chief distinguishing characteristic of hydrodynamic bearings, as opposed to boundary-lubricated bearings, is that metal-to-metal contact between the journal and bearing does (should) not occur except possibly during startup or shutdown.

Rolling-element bearings are firmly entrenched in aircraft turboshaft engine design, and the author knows of only one case in which a hydrodynamic bearing has been successfully used for this application. The two principal reasons for this are that (1) a rolling-element bearing usually fails in a gradual way, which gives warning time before aircraft power is lost, and (2) rolling-element bearings reject less heat to the lubricant, thus allowing a smaller heat exchanger for cooling.

The latter comparison does not apply to gas bearings. This, and the reliable availability of lubricant for a gas bearing, has provided considerable incentive for research and development of gas bearings for turboshaft applications.

The chief advantage that all hydrodynamic bearings offer is long life. Gas bearings also offer extremely low friction coefficients, although they have a much smaller load capacity for their size than fluid film bearings.

GAS BEARINGS

Reference 60 describes a feasibility study performed by Mechanical Technology Incorporated (MTI) and Pratt and Whitney Aircraft for the Eustis Directorate, U.S. Army Air Mobility

[60] P. W. Curwen, *Feasibility of Gas Bearings for Small High-Performance Aircraft Gas Turbines*, USAAVLABS Technical Report 68-87, U. S. Army Aviation Materiel Laboratories, Fort Eustis, Virginia, March 1969, AD 684956.

Research and Development Laboratory, to apply gas bearings to a small turboshaft engine. Dynamic stability problems were encountered in the attempted application, which is a common occurrence with gas bearings.

More recently the Air Force Aero-Propulsion Laboratory has supported work at AiResearch Corporation and MTI to develop gas bearings for intershaft support between a power turbine shaft and compressor spool. This work is not complete at this date.

There is a severe radial space problem in the design of a front-drive engine with the power turbine shaft inside the compressor spool. If the compressor rotor could be mounted on gas bearings, its shaft diameter could be increased to accommodate a larger and stiffer power turbine shaft. The large-diameter compressor spool would be compatible with the need for large gas bearings to support the load. This appears to be the one unexplored, but logical, potential application of gas bearings to small turboshaft engines.

OIL FILM BEARINGS

Although rolling element bearings are called "antifriction" bearings, they do not necessarily have a lower friction coefficient than oil-film bearings. Furthermore, in some stationary applications, oil-film bearings have demonstrated extremely long life capabilities.

In the one successful turboshaft application of an oil-film bearing, mentioned above, the incentive was a limitation of radial space.

The required heat exchanger size and flight safety considerations probably preclude broad application of these bearings in turboshaft aircraft engines. Nevertheless, it is likely that there will be special applications where long life or radial space is a problem that can best be solved by an oil-film bearing.

Problems of dynamic instability with oil-film bearings, such as "oil whip",[33] have been effectively solved through research and development of new bearing designs. An example is the "tilting pad bearing", in which the cylindrical bearing sleeve is replaced with several pivoted blocks around the circumference, each one supporting the journal over a segment of the cylindrical surface. This type of bearing is more stable and can also accept greater shaft misalignment.

Due to limitations of radial space between the compressor spool and power turbine shaft, oil-film bearings may find useful application in this location as intershaft bearings. This has been attempted in at least one engine development program. First tests were not successful, and the idea was abandoned without determining the cause of failure.

Intershaft oil-film bearings require corotating shafts (same direction), since the hydrodynamic support is greatly reduced in counterrotating shafts and completely disappears if the shafts rotate at equal speeds in opposite directions. Figure 11 illustrates how the wedge effect to generate support pressure depends on rotation direction when both the journal and the bearing are rotating.

Whenever a hydrodynamic bearing is used in aircraft propulsion machinery, the possibility of lubricant supply interruption or failure must be considered in the design. Both military specifications and FAA requirements demand some operating time after lubricant supply

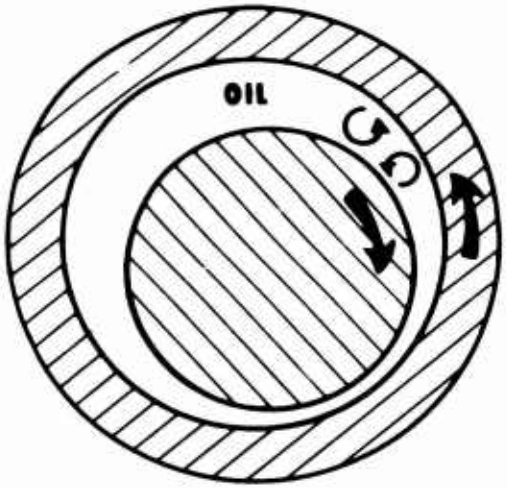

JOURNAL AND BEARING COUNTERROTATING; TURBULENT EDDIES INDUCED IN OIL FILM; NO SUPPORT PRESSURE GENERATED.

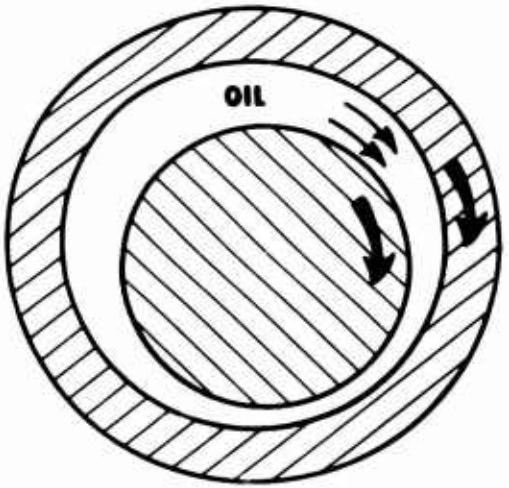

JOURNAL AND BEARING COROTATING; OIL DRAWN INTO CONVERGING WEDGE TO GENERATE PRESSURE.

Figure 11. Dependence of intershaft bearing load capacity on rotation direction of both shafts.

interruption. One way to approach this problem is to design lubricant reservoirs near the bearings.

Hybrid bearings, in which a hydrodynamic bearing is located inside a rolling element bearing, are under development at the NASA-Lewis Research Center.[61] The hybrid bearing may prove to combine some of the best features of both types. Since the film bearing and rolling element bearing are in series, the result is a corotating journal and bearing for the former and a smaller DN value for the latter.

RECOMMENDATIONS

It is recommended that the following subjects be investigated:

1. Feasibility of gas bearing support for compressor spools, to allow more room for a stiffer power turbine shaft in front-drive engines. This should begin with a preliminary study to determine if the concept is sound. It may be that the large-diameter gas bearing and spool shaft would require an increase in the overall cross-sectional size of the engine, thus producing an undesirable trade-off.

2. Feasibility of oil-film intershaft bearings for midspan power turbine shaft support. There is little question that this proposal is conceptually sound, except for a possible lubricant supply problem and excluding counterrotating shafts. The most severe problem is likely to be shaft misalignment and deflection, which can be attacked using recently developed bearing design technology. The possibility of longer bearing life and higher critical speeds for the power turbine shaft makes this study especially attractive.

3. Application of hybrid bearings to aircraft turboshaft engines. Progress at NASA-Lewis Research Center should be monitored on a continuing basis to ascertain when this type of bearing may be ready and suitable for application to rotor-shaft support in military engines. This may be the only way to get the higher shaft speeds and longer life that will be required in the future.

---

[61] L. J. Nypan, H. W. Scibbe, and B. J. Hanrock, *Optimal Speed Sharing Characteristics of a Series-Hybrid Bearing*, ASME Journal of Lubrication Technology, January 1973, pp. 76-81.

REFERENCES

1. Jeffcott, H. H., *The Lateral Vibration of Loaded Shafts in the Neighborhood of a Whirling Speed - The Effect of Want of Balance*, Philosophical Magazine, Vol. 37, No. 6, 1919, p. 304.

2. Gunter, E. J., Jr., *Dynamic Stability of Rotor-Bearing Systems*, NASA-SP-113, 1966.

3. Lund, J. W., *Stability and Damped Critical Speeds of a Flexible Rotor in Fluid Film Bearings*, ASME Paper No. 73-DET-103, 1973 ASME Design Technology Conference, Cincinnati, Ohio, September 9-12, 1973.

4. Den Hartog, J. P., *Mechanical Vibrations*, New York, McGraw-Hill Book Co., 1956, pp. 155-159, 162-165.

5. LeGrow, J. V., *Multiplane Balancing of Flexible Rotors - A Method of Calculating Correction Weights*, ASME Paper No. 71-VIBR-52, 1971 ASME Vibrations Conference, Toronto, Canada, September 8-10, 1971.

6. Prohl, M. A., *A General Method for Calculating Critical Speeds of Flexible Rotors*, Transactions of the ASME, Vol. 67, 1945, Journal of Applied Mechanics, Vol. 12, pp. A-142 - A-148.

7. Mylkestad, N. O., *A New Method of Calculating Natural Modes of Uncoupled Bending Vibration of Airplane Wings and Other Types of Beams*, Journal of the Aeronautical Sciences, Vol. 11, No. 2, April 1944, pp. 153-162.

8. Den Hartog, J. P., *Mechanical Vibrations*, McGraw-Hill Book Co., New York, 1956, pp. 229-232.

9. Pilkey, W., and Chang, P. Y., *Avoiding Iterative Searches To Find Critical Speeds of Rotating Shafts With the Transfer Matrix Method*, ASME Paper No. 71-VIBR-53, 1971 ASME Vibrations Conference, Toronto, Canada, September 8-10, 1971.

10. Den Hartog, J. P., *Mechanical Vibrations*, McGraw-Hill Book Co., New York, 1956, pp. 141-147.

11. Eshleman, R. L., and Eubanks, R. A., *On the Critical Speeds of a Continuous Rotor*, Transactions of the ASME, Journal of Engineering for Industry, November 1969, pp. 1180-1188.

12. Myklestad, N. O., *Seminar on Critical Speed Analysis*, University of Florida, 1970.

13. Vance, J. M., and Simmons, H. R., *Computer Analysis of the Transient Dynamics of Rigid and Flexible Rotors With Bearing Dampers*, Pratt and Whitney Aircraft FTDM-301, September 15, 1969.

14. Kirk, R. G., and Gunter, E. J., *Transient Response of Rotor-Bearing Systems*, ASME Paper No. 73-DET-102, ASME Design Technology Conference, Cincinnati, Ohio, September 9-12, 1973.

15. Sevcik, J. K., *System Vibration and Static Analysis*, ASME Paper No. 63-AHGT-67, Aviation and Space, Hydraulic, and Gas Turbine Conference and Products Show, Los Angeles, California, March 3-7, 1963.

16. Bohm, R. T., *Designing Complex Turbo Rotor Systems With Controlled Vibration Characteristics*, SAE Paper No. 928B, National Transportation, Powerplant, and Fuels and Lubricants Meeting, Baltimore, Maryland, October 19-23, 1964.

17. Den Hartog, J. P., *Mechanical Vibrations*, McGraw-Hill Book Co., New York, 1956, pp. 232-246.

18. Kellenberger, W., *Should a Flexible Rotor Be Balanced in N or (N + 2) Planes?*, ASME Paper No. 71-VIBR-55, 1971 ASME Vibrations Conference, Toronto, Canada, September 8-10, 1971.

19. Tessarzik, J. M., *Flexible Rotor Balancing by the Exact Point-Speed Influence Coefficient Method*, NASA CR-72774, MTI-70TR59.

20. Tessarzik, J. M., Badgley, R. H., and Anderson, W. J., *Flexible Rotor Balancing by the Exact Point-Speed Influence Coefficient Method*, ASME Paper No. 71-VIBR-91, 1971 ASME Vibrations Conference, Toronto, Canada, September 8-10, 1971.

21. Goodman, T. P., *A Least-Squares Method for Computing Balance Corrections*, ASME Paper No. 63-WA-295, 1963.

22. Rieger, N. F., *Computer Program for Balancing of Flexible Rotors*, MTI Technical Report 67 TR68, NASA-Lewis Research Center Contract NA53-10926, September 1967.

23. Lund, J. W., and Tonnesen, J., *Analysis and Experiments on Multiplane Balancing of a Flexible Rotor*, ASME Paper No. 71-VIBR-74, 1971 ASME Vibrations Conference, Toronto, Canada, September 8-10, 1971.

24. Rieger, N. F., and Badgley, R. H., *Flexible Rotor Balancing of a High-Speed Gas Turbine Engine*, SAE Paper No. 720741, National Combined Farm, Construction, and Industrial Machinery and Powerplant Meetings, September 11-14, 1972.

25. Gunter, E. J., *Influence of Flexibly Mounted Rolling Element Bearings on Rotor Response, Part I - Linear Analysis*, ASME Journal of Lubrication Technology, January 1970, pp. 59-75.

26. Williams, R., Jr., and Trent, R., *The Effects of Nonlinear Asymmetric Supports on Turbine Engine Rotor Stability*, SAE Paper No. 700320, National Air Transportation Meeting, New York, N. Y., April 20-23, 1970.

27. Black, H. F., and McTernan, A. J., *Vibration of a Rotating Asymmetric Shaft Supported in Asymmetric Bearings*, Journal of Mechanical Engineering Science, Vol. 10, No. 3, 1968, p. 252.

28. Foote, W. R., Poritsky, H., and Slade, J. J., Jr., *Critical Speeds of a Rotor With Unequal Shaft Flexibilities Mounted in Bearings of Unequal Flexibility - I*, ASME Journal of Applied Mechanics, June 1943, Transactions, pp. A-77 - A-84.

29. Messal, E. E., and Bonthron, R. J., *Subharmonic Rotor Instability Due To Elastic Asymmetry*, ASME Paper No. 71-VIBR-57, 1971 ASME Vibrations Conference, Toronto, Canada, September 8-10, 1971.

30. Sternlicht, B., *Stability and Dynamics of Rotors Supported on Fluid-Film Bearings*, ASME Journal of Engineering for Power, October 1963, pp. 331-342.

31. Hull, E. H. *Shaft Whirling as Influenced by Stiffness Asymmetry*, ASME Journal of Engineering for Industry, May 1961, pp. 219-226.

32. Lund, J. W., and Saibel, E., *Oil Whip Whirl Orbits of a Rotor in Sleeve Bearings*, ASME Journal of Engineering for Industry, November 1967, pp. 813-822.

33. Hori, Y., *A Theory of Oil Whip*, ASME Journal of Applied Mechanics, June 1959, pp. 189-198.

34. Dubois, G. B., and Ocvirk, F. W., *Analytical Derivation and Experimental Evaluation of Short-Bearing Approximation for Full Journal Bearings*, Report 1157, National Advisory Committee for Aeronautics, 1953. (Also see NACA TN 2808 and TN 2809, 1952.)

35. Cooper, S., *Preliminary Investigation of Oil Films for the Control of Vibration*, Institution of Mechanical Engineers (England), Lubrication and Wear Convention, 1963.

36. Jones, M. G., *An Experimental Investigation of Squeeze Film Hydrodynamics*, Report No. R.320, National Gas Turbine Establishment, Ministry of Defence (England), January 1973.

37. White, D. C., *The Dynamics of a Rigid Rotor Supported on Squeeze Film Bearings*, Conference on Vibrations in Rotating Systems, London, Proceedings, Institution of Mechanical Engineers, February 14-15, 1972.

38. Taylor, H. D., *Critical Speed Behavior of Unsymmetrical Shafts*, ASME Journal of Applied Mechanics, June 1940, Transactions, pp. A-71 - A-79.

39. Arnold, R. C., and Hoft, E. E., *Stability of an Unsymmetrical Rotating Cantilever Shaft Carrying an Unsymmetrical Rotor*, ASME Paper No. 71-VIBR-58, 1971 ASME Vibrations Conference, Toronto, Canada, September 8-10, 1971.

40. Crandall, S. H., and Brosens, P. J., *On the Stability of Rotation of a Rotor With Rotationally Unsymmetric Inertia and Stiffness Properties*, ASME Journal of Applied Mechanics, December 1961, pp. 567-570.

41. Newland, D. E., *On the Stability of Rotation of a Rotor With Rotationally Unsymmetric Inertia and Stiffness Properties* (Brief Note), ASME Journal of Applied Mechanics, December 1964, pp. 723-724.

42. Ehrich, F. F., *Shaft Whirl Induced by Rotor Internal Damping*, ASME Journal of Applied Mechanics, June 1964, pp. 279-282.

43. Seirig, A., *Whirling of Shafts in Geared Systems*, ASME Journal of Engineering for Industry, May 1967, pp. 278-283.

44. Gunter, E. J., Jr., *The Influence of Internal Friction on the Stability of High Speed Rotors*, ASME Journal of Engineering for Industry, November 1967, pp. 683-688.

45. Gunter, E. J., Jr., and Trumpler, P. R., *The Influence of Internal Friction on the Stability of High Speed Rotors With Anisotropic Supports*, ASME Journal of Engineering for Industry, November 1969, pp. 1105-1113.

46. Vance, J. M., and Lee, J., *Stability of High Speed Rotors With Internal Friction*, ASME Paper No. 73-DET-127, ASME Design Technology Conference, Cincinnati, Ohio, September 9-12, 1973.

47. Ehrich, F. F., *An Aeroelastic Whirl Phenomenon in Turbomachinery Rotors*, ASME Paper No. 73-DET-97, ASME Design Technology Conference, Cincinnati, Ohio, September 9-12, 1973.

48. Alford, J. S., *Protecting Turbomachinery From Self-Excited Whirl*, ASME Journal of Engineering for Power, October 1965, pp. 333-344.

49. Ehrich, F. F., *The Influence of Trapped Fluids on High Speed Rotor Vibration*, ASME Journal of Engineering for Industry, November 1967, pp. 806-812.

50. Fritz, R. J., *The Effects of an Annular Fluid on the Vibrations of a Long Rotor, Part 1 - Theory*, ASME Paper No. 70-FE-30, Fluids Engineering, Heat Transfer, and Lubrication Conference, Detroit, Michigan, May 24-27, 1970.

51. Fritz, R. J., *The Effects of an Annular Fluid on the Vibrations of a Long Rotor, Part 2 - Test*, ASME Paper No. 70-FE-31, Fluids Engineering, Heat Transfer, and Lubrication Conference, Detroit, Michigan, May 24-27, 1970.

52. Begg, I. C., *Friction Induced Rotor Whirl - A Study in Stability*, ASME Paper No. 73-DET-106, ASME Design Technology Conference, Cincinnati, Ohio, September 9-12, 1973.

53. Ehrich, F. F., *The Dynamic Stability of Rotor/Shaft Radial Rubs in Rotating Machinery*, ASME Journal of Engineering for Industry, November 1969, pp. 1025-1028.

54. Den Hartog, *Mechanical Vibrations*, McGraw Hill Book Co., New York, 1956, p. 265.

55. Yamamoto, T., *On Critical Speeds of a Shaft Supported by Ball Bearings*, ASME Journal of Applied Mechanics, June 1959, pp. 199-204.

56. Kane, T. R., *An Addition to the Theory of Whirling*, ASME Journal of Applied Mechanics, September 1961, pp. 383-386.

57. Thomson, W. T., *Vibration Theory and Applications*, Prentice Hall, Englewood Cliffs, N. J., 1965, pp. 84-86.

58. Greene, R. B., *Gyroscopic Effects on the Critical Speeds of Flexible Rotors*, ASME Journal of Applied Mechanics, Transactions, Vol. 70, 1948, pp. 369-376.

59. Huang, T. C., and Huang, F. C. C., *On Precession and Critical Speeds of Two-Bearing Machines With Overhung Weight*, ASME Paper No. 67-VIBR-19, 1967 ASME Vibrations Conference, Boston, Massachusetts, March 29-31, 1967. (Also published in the ASME Journal of Engineering for Industry.)

60. Curwen, P. W., *Feasibility of Gas Bearings for Small High-Performance Aircraft Gas Turbines*, USAAVLABS Technical Report 68-87, U. S. Army Aviation Materiel Laboratories, Fort Eustis, Virginia, March 1969, AD 684956.

61. Nypan, L. J., Scibbe, H. W., and Hanrock, B. J., *Optimal Speed Sharing Characteristics of a Series-Hybrid Bearing*, ASME Journal of Lubrication Technology, January 1973, pp. 76-81.