AD-787 299

DETERMINATION OF OPTIMAL USE LIFE OF U.S. ARMY T-10 TROOP TYPE PERSONNEL PARACHUTES. PART II

Ronald S. Morris, et al

Army Materiel Command

Prepared for:

Texas A and M University

June 1974

DISTRIBUTED BY:

NTIS

National Technical Information Service
U. S. DEPARTMENT OF COMMERCE

Best
Available
Copy

AD787299

Report USAMC-ITC-02-08-73-001-PT-2

DETERMINATION OF OPTIMAL USE LIFE OF U.S. ARMY T-10 TROOP TYPE PERSONNEL PARACHUTES

Part II

Ronald S. Morris, Assistant Professor
Industrial Engineering Department
Texas A&M University
Red River Army Depot
Texarkana, Texas 75501

Don E. Ferrell
Headquarters, U.S. Army Materiel Command
Maintenance Directorate
Alexandria, Virginia 22333

D D C
OCT 23 1974
C

June 1974

Reproduced by
NATIONAL TECHNICAL
INFORMATION SERVICE
U S Department of Commerce
Springfield VA 22151

Final Report

APPROVED FOR PUBLIC RELEASE: DISTRIBUTION UNLIMITED

Prepared For:

Natick Laboratories, Natick, Massachusetts

FOREWORD

This Part was accomplished independently by the authors as a result of the study reported in Part One. This effort was prompted by the authors' concerns that the statistical results of Part One could be misinterpreted and misapplied, and that more comprehensive results through proper experimental design were necessary to an investigation of parachute age life. As such, the opinions and procedures presented herein are those of the authors and do not necessarily reflect approval by Texas A&M University or the Department of the Army.

For further information on this report contact Dr. Ronald S. Morris, Graduate Center, Texas A&M University, Red River Army Depot, Texarkana, Texas 75501.

ACKNOWLEDGMENTS

The authors wish to acknowledge the assistance received from Dr. Robert L. Street in editing and proofreading this Part. Also, special thanks must be given Ms. Karon Potter for her diligent typing and proofreading.

TABLE OF CONTENTS

Chapter		
I	INTRODUCTION	1
II	PARACHUTE SYSTEM RELIABILITY	4
III	EXPERIMENTAL DESIGN FOR PARACHUTE TESTING	12
	Tests To Be Used And Components To Be Tested	12
	Acceptable Tolerance Limits	14
	Experiment Design	14
	Obtaining A Sample	18
	Conducting The Experiment	20
	Reliability Test Analysis	21
IV	RECOMMENDATIONS AND CONCLUSIONS	24

LIST OF FIGURES AND TABLES

Figure

1 SYMBOLIC DIAGRAM OF STANDARD ARMY PARACHUTE SYSTEM FOR PERSONNEL USE. 5

2a PRESENT (HYPOTHESIZED) STRESS STRENGTH RELATIONSHIP. . . 9

2b STRESS STRENGTH RELATIONSHIP AS POPULATION AGES. 9

3 EXPERIMENT DESIGN. 16

Table

1 PROBABILISTIC EVENTS GOVERNING PARACHUTE RELIABILITY . . 7

2 MATERIAL FAILURE MODE AND EFFECT ANALYSIS OF PARACHUTE SYSTEMS. 11

CHAPTER ONE

INTRODUCTION

This report describes a procedure which, if employed, can provide the data on the properties of personnel parachute assemblies necessary for justification of an age life extension. In Part One of this report, the reader was introduced to the several methods of data collection and analyses, which are currently being employed by the various Services to investigate use and age life limitations of parachutes. Part One dealt primarily with a study, conducted in conjunction with the U.S. Army Natick Laboratories, seeking to justify a use life extension of U.S. Army T-10 troop-type main personnel parachutes. The results of the analysis conducted in Part One, however, are inconclusive due to a number of inaccuracies in the data, faulty experimental design, and to a number of assumptions which were necessary in the analysis. This report details an experimental design which should be used to provide the necessary statistical basis for establishing the degree of an age life extension as recommended in Part One.

The effective use life of U.S. Army main T-10 personnel parachutes has, in the past, been based upon the limiting criteria of ten years from date of manufacture or 100 jumps, whichever occurred first. This use life formula was arbitrarily developed: it is not the result of an accurate scientific investigation. Recently it has been suggested that the 100 jump limitation be removed entirely as a judgment criterion in the use life formula. This recommendation

resulted from a study which found that, in the majority of cases, the actual number of jumps accumulated per parachute could not accurately be determined. Parachute logbooks, one of which should accompany each parachute at all times, were found to be highly inaccurate with respect to the recorded number of jumps. Usually the books contained only an estimate of the actual number of jumps based upon an allowance of ten jumps per year since the date of manufacture of the parachute. Evidently field personnel, without strict supervision, simply fail to record many of the jumps and, in addition, many of the original logbooks have been lost or destroyed during the course of the life of the parachute. Part One of this report indicated that the number of jumps a parachute has been subjected to cannot yet reasonably be disregarded as a significant indicator of strength degradation with use.

A second serious weakness is that current use life determinations are based on arbitrary military specifications which were not developed as a result of an accurate determination of actual strength requirements. Minimum strength requirements, as now established, were developed to insure high quality parachutes from the manufacturers. In Part One it was suggested that two sets of military specifications might be adopted: one to insure a continual high quality parachute being received from the manufacturer and one with much lower strength requirements to determine actual useful life. From the analysis of data presented in Part One and from the fact that there were over 2,040,000 paratrooper jumps in the Army in the last seven years without a fatality due to a material strength failure, it becomes obvious

that the current military specifications represent an extremely high factor of safety.

CHAPTER II

PARACHUTE SYSTEM RELIABILITY

In attempting to establish limiting strength criteria, the types of failures and their effects must be ascertained. If the system, as a whole, is defined as the paratrooper in standard issue outfit, then the system consists of a T-10 main parachute, staticly deployed upon egress from the drop plane, and a T-10 reserve parachute deployed automatically or manually at a prescribed altitude. Reserve deployment is accomplished by a newly issued device which forcefully ejects the reserve canopy out to the side and above the main canopy, significantly reducing the possibility of entanglement with the main.

The deployment sequence for the main chute allows approximately 10 to 20 feet of free fall before opening of the main canopy. Opening, which is initiated by the static line attached to the aircraft, constitutes minimal shock as compared to sport parachuting where significant free fall is expected. If the reserve deployment system is actuated by the paratrooper, or automatically when the rate of descent at a prescribed altitude is reached, the paratrooper may have reached near terminal velocity. In this case maximal opening loads will be experienced.

For reliability analysis purposes the system can be considered a single module (main) with a standby redundant module (reserve). The reserve deployment mechanism, whether automatic or manual, can be considered the switch. The whole system is then graphically

diagrammed as shown in Figure 1. A reliability statement for the system can be developed from standard probability theory by enumerating all successful events, as done in Table 1. It can be shown that system reliability is given by

$$R_s = P_m P_{a_1} P_r + P_m P_r (1-P_{a_1}) + P_{a_2} P_r (1-P_m)$$

where the various probability elements are defined in Table 1. This equation algebraically reduces to

$$R_s = P_m P_r + P_{a_2} P_r (1-P_m)$$

which can be rearranged as follows

$$R_s = P_r (P_m(1-P_{a_2}) + P_{a_2}).$$

In this discussion we are concerned only with parachute structural reliability and not with operator errors (except when reserve is manually deployed). It is interesting to note that if the actuator is assumed to have a reliability of one, the term in the brackets becomes one and the reliability of the system is simply the reliability of the reserve chute. As the reliability of the actuator is considered very high, the reliability of the system can be assumed constrained by the reliability of the reserve chute.

Presently the reliability of the chute, both reserve and main, must be considered one. Statistically it is impossible to estimate a reliability or failure rate without having experienced a material failure. With 2,040,000 recorded jumps and no reported failures, the reliability must, therefore, be assumed one. As the system weakens due to the combined effects of age and usage (it is realistic to

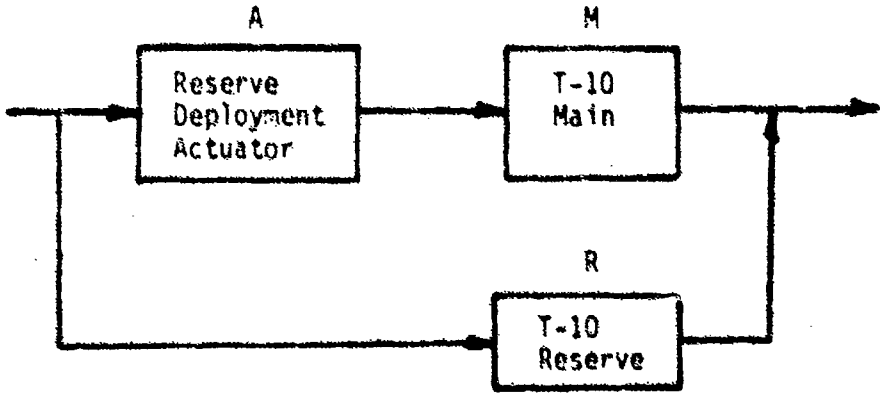

FIGURE 1. SYMBOLIC DIAGRAM OF STANDARD ARMY PARACHUTE SYSTEM FOR PERSONNEL USE.

EVENT NOTATION	DESCRIPTION
$P_m P_{a_1} P_r$	Main chute and actuator operate properly.
$P_m \overline{P}_{a_1} P_r$	Main chute operates properly but actuator fails deploying reserves which operates properly.
$\overline{P}_m P_{a_2} P_r$	Main chute fails, actuator operates properly deploying reserve, reserve operates properly.

NOTATIONS:

P_m - Probability of successful operation of main chute.

P_r - Probability of successful operation of reserve chute.

P_{a_1} - Probability of no premature, unwanted operation of actuator.

P_{a_2} - Probability of successful operation of actuator if required.

TABLE 1. PROBABILISTIC EVENTS GOVERNING PARACHUTE RELIABILITY.

assume a wearout phenomenon), the reliability will decrease accordingly. It can be hypothesized that the stress strength relationship for the present parachute population (0-10 years old) is as shown in Figure 2a, where both the stress distribution and the strength distribution are considered to follow the normal probability density function (pdf). As the population ages and parachutes begin to wear out, the strength distribution shifts toward the stress distribution: where the distributions overlap, failures occur.

From the study performed in Part One of this report, it was noted that a statistically significant, albeit small, strength degradation occurred with increased age. The data was sufficiently random and had numerous discrepancies so that a statistically extrapolatable trend could not be identified. This fact, however, emphasizes the validity in systematically extending parachute age life until the strength pdf overlaps the stress pdf and failures are reported.

This recommendation may seem unfounded at first glance, but on closer examination it appears to involve little risk. First, the age life extension will necessarily increase the utilization of the main chutes. If strength is primarily a function of usage (as opposed to age being primarily a function of shelf time), then the main chute strength will become significantly degraded without similar degradation of reserve chute strength. Looking again at the reliability functions for the system, degradations of the main chute strength (in effect decreasing P_m) will have virtually no affect on system reliability unless the reserve deployment actuator is of extremely low

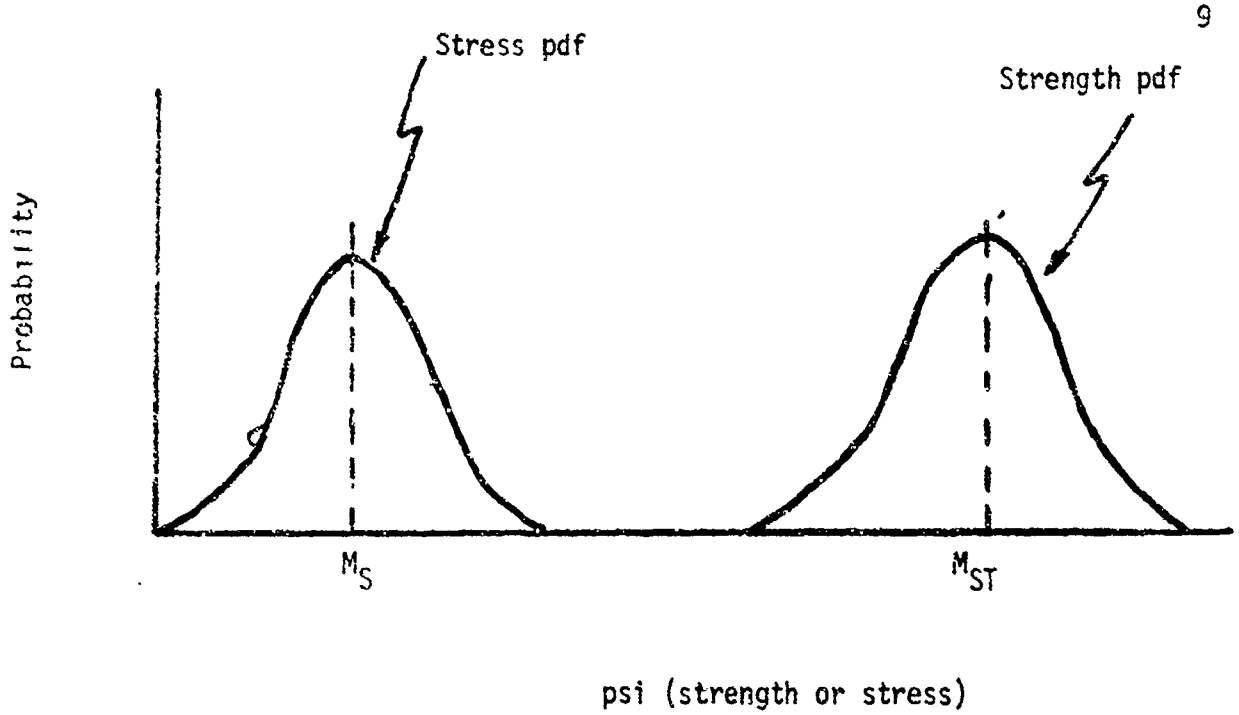

FIGURE 2a. PRESENT (HYPOTHESIZED) STRESS STRENGTH RELATIONSHIP.

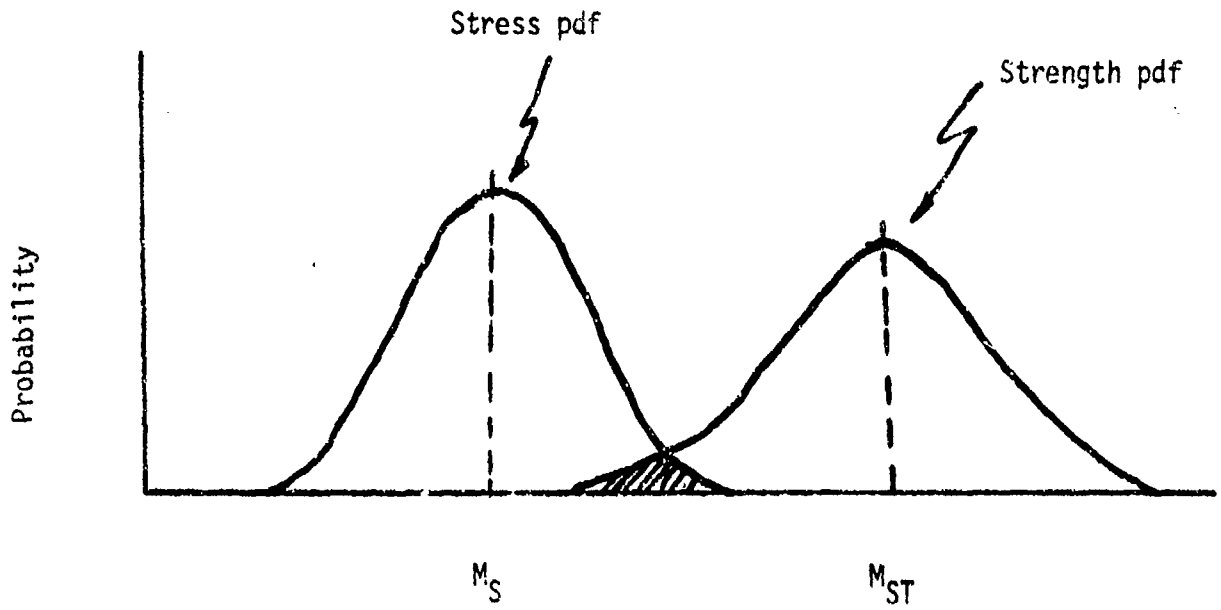

FIGURE 2b. STRESS STRENGTH RELATIONSHIP AS POPULATION AGES.

reliability. As a matter of practice, even more security (higher R_s) could be gained by issuing a new reserve (less than 5 years) with each old main chute.

Secondly, the recommendation can be substantiated by observing material failure modes and their consequent effects. As can be seen by reviewing the cursory failure mode effect analysis given in Table 2, the most likely material failures result in almost no risk and would rarely even demand deployment of the reserve chute.

This chapter has presented a reliability analysis of the parachute system which, when coupled with the results of the Part One data analysis, suggest immediate and substantial increase of the age life of T-10 mains and reserves. This use life increase can be initiated now at very slight risk (actually, due to the phenomenal reliability to date, the decisions can be made at no risk). The following chapter details a test procedure which will provide a realistic appraisal of parachute useful life.

FAILURE MODE	PROBABILITY OF OCCURRENCE *	PHYSICAL EFFECT	CONSEQUENCES TO PARACHUTIST
Fabric Failure	u	Weakness of fabric causes blowout of panel. Under the assumptions that the fabric is fairly uniform in strength, a blowout would most likely occur in the apex panels. The effect would be to decrease the stress (limiting possibility of more blowouts) and slightly increase descent rate.	The parachutist would experience a slightly increased descent rate. Sport parachutist use chutes with several of the apex panels vented to control rates and direction.
Structural Failure	u++	Failure of the stitching or seams would have most of the effects mentioned above. However, due to the type of seam constructions and the method of continuous suspension lines the probability of this type failure is negligible.	Same as above.
Suspension Line Failure	u	With 30 suspension lines the effect of a single line failure is negligible. This does, however, load the other lines increasing the probability of subsequent failure.	For failure of a single line the chutist will experience some loss of directional control. In the event of multiple line failures directional control is reduced to the point reserv chute deployment is required.
Riser Failure	u+++	Failure of one of the riser assemblies would cause chute to "streamer" and increase the rate of descent. Failure of both risers would detach the chutist from his parachute.	The chutist would suffer from an inability to control descent. Reserve chute must be employec
Harness Failure	u++++	The harness like the riser assembly is designed with a tremendous safety factor. Failure of the harness, to which both main and reserve chutes are attached, would cause loss of control and possibly free fall.	Since both main and reserve chutes are structurally attached to the harness this type of failure could result in uncontroll descent to impact, depending o the type of failure.

* NOTE: u means the event is unlikely, the trailing plus signs denote the relative degree of unlikelihood.

TABLE 2. MATERIAL FAILURE MODE AND EFFECT ANALYSIS OF PARACHUTE SYSTEMS.

CHAPTER III

EXPERIMENTAL DESIGN FOR PARACHUTE TESTING

As a matter of philosophy, it is important to carefully design a statistical experiment before beginning the test and collecting data. The very exercise of designing the experiment provides clarification of the objectives and elimination of unnecessary data collection and testing. The following describes the design of an experiment which will meet the objectives of providing statistically significant evidence of age and use related strength degradation, an estimate of the limiting strength for a reliable parachute, and a realistic estimate of use life as a function of either age or number of jumps. At the same time, the experiment is designed to minimize the number of data points while maintaining statistical significance and minimizing the time required to complete the experiment. This should minimize the cost of the testing program.

Further, it should be pointed out that the experiment can be concluded in two years which is consistent with the two year age life extension recommended in Part One. It is the authors' contention that the experiment will show the feasibility of even further, safe, age life extension. The cost of the experimental program will probably be offset by the reduction in procurement costs for replacement parachutes due to the two year extension.

Tests To Be Used And Components To Be Tested

Current parachute testing procedures used in all three Services

utilize several different tests. As stated in Part One of this report, Natick Laboratories developed six individual sets of data for canopy material alone, i.e., break strengths in both warp and filling directions, percent elongation in both warp and filling directions, and tear strength in both warp and filling directions. It is not necessary to use multiple destructive testing procedures, rather the approach should be to utilize a test which provides an accurate evaluation of strength in terms of the expected actual use loading. From reliability considerations developed in the preceding chapter, the break strength test is considered most appropriate. It should be noted, however, that from the literature review performed in Part One, the burst strength test would be a better indicator for determining strength values. The burst strength test is currently the only method which relates the complex uniaxial and biaxial forces as they might appear in the canopy material during the opening shock and descent sequences. Had sufficient data been available from the use of burst strength tests upon parachute canopies, it would have been used in place of the break strength tests. However, the break strength is representative of the forces in one dimension that would be expected. The tests are both simple to perform and easy to record. Further, the same test can be used on both the canopy material and the suspension lines. The weakest links of the parachute assembly, as indicated in the previous chapter, are the material of the canopy panels and the suspension line system. The method described in this report has been applied only to the canopy material but could, as easily, be

applied to the suspension lines.

Acceptable Tolerance Limits

In Appendix D of Part One, descriptive statistics are given by types and ages of parachutes. Looking at the given range of values for the break strength tests, both in the warp and filling, we find low values of 25 pounds in the filling of the ten year old reserves and 26.5 pounds in both the warp and filling of the ten year old mains.

Experiment Design

The experiment detailed here is designed to provide data sufficient to determine the effect of use and age on parachute strength and further to provide a basis for establishing strength requirements and reliability parameters. The primary structure of concern, in this instance, is the parachute canopy material; the reader will recognize that suspension lines and other structures can be treated at the same time in a similar manner.

It can be hypothesized that both age and usage result in degradation of the canopy material strength. The degree of this degradation is somewhat confused by the fact that nylon material work hardens, much like brass, for a period; but unlike brass, no definitive brittleness is observed. Part One, interestingly enough, shows that a low value for break strength occurred in the reserve chutes, which had presumably never been jumped, and not in the mains. The significance of the observed degradations with age (Part One) is somewhat confused

by the small standard deviation (σ=3.83) in relation to the large mean value (μ=44.10). This relationship, however, will provide a beneficial basis in that to obtain significant results, smaller sample sizes are needed. The fact that the experiment must differentiate the hypothesized strength degradation due to age, use, and the interaction of the two, suggests the use of a two factor experiment with age and number of jumps being the factors.

Since the parachutes are destroyed during strength evaluation, it is also feasible to test different areas of stress. That is, samples should be drawn from the apex panels (highest stress) and successively lower panels to obtain a stress range. The addition of this parameter suggests modifying the two factor experiment to a 3 factor, with the third factor not increasing the number of parachutes required. Further, the strength measurement error is suspected to be large in relation to total population variation due to the method of obtaining the exact one inch wide strips of nylon used in the test. This fact suggests the use of replications within each cell of the experiment to provide a means of partially removing measurement error.

Figure 3 shows the proposed experimental design. This is a 3x3x3 factorial design experiment with three replications per cell. In this design, age lives of 0, 6, and 12 years and usage factors of 0, 100, and 200 jumps were chosen because they sufficiently bracket the current age life limits. To complete the data for a cell, three samples taken the same general distance from the apex and from the same panel are break strength tested. For example, to obtain the

AGE Years \ Usage Jumps	0			100			200		
	A	Panel B	C	A	Panel B	C	A	Panel B	C
0									
	$S_{1,1,1,1}$	$S_{1,1,2,1}$	$S_{1,1,3,1}$	$S_{2,1,1,1}$	$S_{2,1,2,1}$				
	$S_{1,1,1,2}$								
	$S_{1,1,1,3}$								
	A	Panel B	C	A	Panel B	C	A	Panel B	C
6									
	$S_{1,2,1,1}$		$S_{1,2,3,1}$						
	A	Panel B	C	A	Panel B	C	A	Panel B	C
12									
							$S_{3,3,1,1}$	$S_{3,3,2,1}$	$S_{3,3,3,1}$
									$S_{3,3,3,3}$

where

Panel A	is Apex Panel
Panel B	is Mid Panel
Panel C	is Bottom Panel
$S_{i,j,k,l}$	is observed break strength of the parachute with i^{th} usage, j^{th} age, k^{th} panel and l^{th} sample from that panel.

FIGURE 3. EXPERIMENT DESIGN.

data for the lower, right corner block of the experiment (Figure 3), three 12 year old parachutes with 200 jumps must be obtained. Three panels are chosen from each chute, three samples are cut from each panel, and their break strengths are then determined.

The reader will note that this experimental design will require 27 parachutes of various ages and number of jumps. The 27 chutes must have no jumps with 9 chutes each of 0, 6, and 12 years of age. The section of this Chapter titled Conducting The Experiment (page 20) describes the method of obtaining the appropriate number of jumps. As can be seen, a total of 243 break strength tests must be performed. This size sample is small but should provide sufficient statistical significance. As justification for the sample size, suppose that a standard t-type two parameter hypothesis test is performed to determine if the mean strengths of the populations of 100 and 200 jump parachutes is different. Assuming a population strength standard deviation, as given in Part One, of 3.83 it can be shown that the sample size of nine parachutes (of 100 jumps and 200 jumps) will provide an α error of .05 and a β error of .10 for detecting a shift in the means of break strengths of 3.5 pounds.

<u>NOTE</u>: It should be pointed out that the present population ranges in break strength between 26.50 and 53.30 with the mean at 44.10. Since no failures have occurred in this population it can be assumed that even a two standard deviation shift in the means would not significantly increase the probability of failure. Therefore, the test would be considered very conservative in that the only decision

being made is that age or jumps have an effect on strength. Only the reliability test discussed later can provide a measure of the limits of strength degradation before failures will begin occurring.

Several textbooks provide thorough discussions of analysis of variance and construction of the ANOVA tables so the reader is referred to them for clarification. The model of interest is given as:

$$S_{i,j,k,l}=M+U_i+A_j+P_k+(U_xA)_{ij}+(U_xP)_{ij}+(A_xP)_{jk}+(U_xA_xP)_{i,j,k}+t_{i,j,k,l}$$

where

$S_{i,j,k,l}$	is the observation,
M	is the mean value,
U	is the usage effect,
A	is the age effect,
P	is the panel effect,
(U_xA)	is the usage-age interaction effect,
(U_xP)	is the usage-panel interaction effect,
(A_xP)	is the age-panel interaction effect,
(U_xA_xP)	is the usage-age-panel interaction effect, and
$t_{i,j,k,l}$	is the uncontrolled error effect.

The same basic model can be applied to the suspension lines (or other components) simply by removing the panel terms. All the contributing elements in the model can be tested to determine if they significantly change the population. In other words, if parachute strengths do not change as a function of age, use, or panel location, none of the terms in the model will be significant with respect to the variations supplied by the error term.

Obtaining A Sample

In Part One of this report, it was noted that destructive testing

was completed upon 105 U.S. Army T-10 reserve personnel parachutes. Reserve parachutes seem to provide the answer of how to obtain an appropriate sample for an effective and reliable test. This is evident for several important reasons. First, it can safely be assumed that the reserve parachutes have accumulated no jumps, since they are used only in the event of failure in one of the components of the main parachute which happens very rarely. Secondly, the reserve parachutes are available for any desired age period and they are constructed from the same materials and components as the T-10 mains. Thirdly, if the reserve parachutes were used under the same drop conditions as are the mains, they would be subjected to considerably higher stresses upon their components. This is due to the fact that the T-10 reserves are only 24 feet in diameter as opposed to 35 feet in diameter for the T-10 mains and, in addition, the reserves only have 24 suspension lines while the mains have 30. This means there is considerably less surface area of canopy material to absorb the opening shock and descent forces and obviously, 24 suspension lines must do the work of 30 in absorbing the same forces. Therefore, use of these reserves for actual drop conditions would represent a "worst-case" analysis when compared with the mains and would provide for a large built-in safety factor.

Thirty six (36) T-10 type reserve chutes should be obtained: 12 each of ages new, six years old (6), and twelve years old (12). Use of a sample of this composition will allow separation of age and use effects. Of these 36, nine (9) will be used for the reliability test

described subsequently. By the use of dummy loads, they can be static line deployed from a moving aircraft as a means of obtaining data on the usage factor. A more economical approach would be to use them for training purposes from drop towers at paratrooper training facilities. Free-fall deployment is not recommended as it involves much higher and possibly very different forces upon the parachute components. These high forces are rarely encountered under static line deployment, even in the case of a delayed opening, as the static line at least pulls the canopy from the bag and this provides a large drag force which prevents an unencumbered terminal velocity from being attained.

Conducting The Experiment

After obtaining a suitable sample and selecting a site for the experiment, 27 parachutes should be put on test (nine chutes to be used for the 0 age, 0 jump samples). Suitable data gathering procedures should be instituted to assure accurate recording of the number of jumps and any damages that occur. After 100 jumps, nine of the parachutes (3 from each age group) should be removed from the sample. After 200 jumps nine more should be removed (again 3 from each age group), leaving nine parachutes which will continue to be jumped for the reliability test.

During this portion of the test, any failures or accidents which require retiring a parachute can be compensated for by using one of the parachutes intended for the reliability test. After the 0, 100,

and 200 jump chutes have been collected, samples of the fabric can be removed from each one for use in the break strength test. As indicated earlier, the samples should be removed from the same general location on each chute. There will be a total of nine samples from each chute, which are then prepared for the break strength test. Great care should be taken to assure that the dimensions of the fabric specimen are the same. A two or three thread difference in the specimen width could introduce 2 or 3 pounds error in the break strength.

The data gathered from the above procedure can then be analyzed using conventional Analysis of Variance theory. If significant differences are discovered and a trend identified, regression techniques will provide a means of extrapolating parachute strengths to higher levels of usage/age.

In the meantime, the remaining parachutes should be jumped until failures occur. It would be desirable to continue testing until all chutes had failed. At this point, however, it is impossible to predict how long the experiment could run due to the very high reliability experienced to date. At least one failure is required to stop the test, but a minimum advisable number would be three before discontinuance.

Reliability Test Analysis

Since there have been no parachute failures it is difficult to justify any hypothesis regarding the type of failure probability density function (pdf) exhibited by parachutes. While the authors suspect a wearout type failure mechanism is operating, for the sake of

analytic ease an exponential pdf will be assumed. The exponential pdf is described by

$$f(t) = \frac{1}{\lambda} e^{-\lambda t}$$

where

$f(t)$ is the probability of failure at time,
t is the time, and
λ is the failure rate $(\frac{1}{MTBF})$.

In this case t will become the number of jumps and $1/\lambda$ the mean jumps before failure (MJBF). This pdf has only one parameter and testing is therefore considerably simplified. Since it is doubtful the test will be run until all chutes fail, the following equation expresses the best estimate of MJBF:

$$\Theta = \sum_{i=1}^{r} t_i + T(n-r)$$

where

Θ is MJBF
t_i is the jumps prior to failure for the ith failure
n is the number of samples,
r is the number of the n samples that failed, and
T is the number of jumps at which point testing terminated.

Confidence limits on the value of Θ, so obtained, are given by the equations:

$$R_u = \frac{(n-r+1)\ F_{[\alpha/2,\ 2(n-r+1),\ 2r]}}{r + (n-r+1)\ F_{[\alpha/2,\ 2(n-r+1),\ 2r]}}$$

$$R_l = \frac{n-r}{n-r + (r+1)\ F_{[\alpha/2,\ 2(r+1),\ 2(n-r)]}}$$

where

R_u is the upper confidence limit
R_l is the lower confidence limit
r is the number failed
n is the sample size
$1-\alpha$ is the confidence level, and
F is Fisher's F.

The larger the number of parachutes allowed to fail the better the statistical prediction and the smaller the range of the confidence limits regarding the MJBF will be.

Upon completion of this phase of the test, break strength tests should be performed. The data from these can be compared to the data from the first analysis, which can be used as a means of determining a wearout trend from number of jumps.

CHAPTER IV

RECOMMENDATIONS AND CONCLUSIONS

Very briefly, an extensive analysis of data gathered over the past year at Natick Laboratories on parachute canopy break strengths, as described in Part One, shows statistically significant age, use, and/or age-use decrement in the break strength. The statistical significance does not confirm a problem, however, as there is no known stress-strength relationship determining the limits of strength where failure begins to occur.

It is safe to extend the age life of personnel parachutes to twelve or thirteen years while the test outlined in this Part can be accomplished. Based on the extreme reliability of the system as discussed in Chapter II and the remarkable record of no material failures to date, it can be concluded that the system has a very large factor of safety and that the age life extension recommended will have no effect on present safety.

The experimental procedure outlined in Chapter III of this report requires that 36 reserve parachutes be selected and placed on a carefully controlled test. Two experiments are then conducted simultaneously. The first will result in a determination if there is significant strength loss due to age, use, and/or the interaction of the two. The second, a reliability test, will continue until several parachutes fail. At that point the remaining parachutes will be destructively tested to determine break strength in the

failure region. As a consequence of the reliability tests, a failure rate will be determined and a lower limit on strength established.

The combined results will establish a lower strength specification for manufacture and for age/use life determination. While a detailed cost analysis was not performed due to insufficient cost data, it is estimated that the two year extension in age life recommended in Part One will result in procurement savings in excess of the cost of conducting the study. It is expected that the recommended experiment will justify further extension of age life by, at least, several more years.