AD-787 082

# THE TRANSITION FRACTIONS IN A CLASS OF MANPOWER PLANNING MODELS

Richard C. Grinold, et al

California University

Prepared for:

Office of Naval Research

June 1974

DISTRIBUTED BY:

NTIS

National Technical Information Service
U. S. DEPARTMENT OF COMMERCE
5285 Port Royal Road, Springfield Va. 22151

Best
Available
Copy

Unclassified

Security Classification

AD 787 082

## DOCUMENT CONTROL DATA - R & D

*Security classification of title, body of abstract and indexing annotation must be entered when the overall report is classified.*

| | |
|---|---|
| 1. ORIGINATING ACTIVITY (Corporate author)<br>University of California, Berkeley | 2a. REPORT SECURITY CLASSIFICATION<br>Unclassified<br>2b. GROUP |

3. REPORT TITLE

THE TRANSITION FRACTIONS IN A CLASS OF MANPOWER PLANNING MODELS

4. DESCRIPTIVE NOTES (Type of report and, inclusive dates)

Research Report

5. AUTHOR(S) (First name, middle initial, last name)

Richard C. Grinold and John P. Weyant

| | | |
|---|---|---|
| 6. REPORT DATE<br>June 1974 | 7a. TOTAL NO. OF PAGES<br>29 | 7b. NO. OF REFS<br>18 |
| 8a. CONTRACT OR GRANT NO.<br>N00014-69-A-0200-1055<br>b. PROJECT NO<br>NR 047 120<br>c<br>d. | 9a. ORIGINATOR'S REPORT NUMBER(S)<br>ORC 74-19<br>9b. OTHER REPORT NO(S) (Any other numbers that may be assigned this report) | |

10. DISTRIBUTION STATEMENT

Approved for public release; distribution unlimited.

| | |
|---|---|
| 11. SUPPLEMENTARY NOTES<br>None | 12. SPONSORING MILITARY ACTIVITY<br>Office of Naval Research<br>Department of the Navy<br>Arlington, Virginia 22217 |

13. ABSTRACT

SEE ABSTRACT.

DD FORM 1 NOV 65 1473 (PAGE 1)

S/N 0101-807-6811

Unclassified

Security Classification

A-31408

Unclassified

Security Classification

| 14 KEY WORDS | LINK A ROLE | LINK A WT | LINK B ROLE | LINK B WT | LINK C ROLE | LINK C WT |
|---|---|---|---|---|---|---|
| Manpower Planning | | | | | | |
| Markov Chains | | | | | | |
| Economic Choice Model | | | | | | |
| Transition Fractions | | | | | | |

ia

DD FORM 1 NOV 65 1473 (BACK)

Unclassified

Security Classification

# THE TRANSITION FRACTIONS IN A CLASS OF MANPOWER PLANNING MODELS

by

Richard C. Grinold and John P. Weyant
University of California, Berkeley

JUNE 1974 ORC 74-19

This research has been supported by the Office of Naval Research under Contract N00014-69-A-0200-1055 with the University of California.
Reproduction in whole or in part is permitted for any purpose of the United States Government.

ib

## ABSTRACT

Most fractional-flow manpower planning models assume that the "transition fractions" are either fixed or can be manipulated at will. As neither of these assumptions is very realistic, we present a model in which the transition fractions are conceived of as being the product of the complex interaction of three sets of economic agents; the organization, its competitors in the manpower market, and its employees. Subsequently, the sensitivity of the model is explored and possible extensions of it are considered. Finally, a small numerical example is given to illustrate the model's practical applicability.

# THE TRANSITION FRACTIONS IN A CLASS OF MANPOWER PLANNING MODELS

by

Richard C. Grinold and John P. Weyant

## 1. INTRODUCTION

Fractional flow (or Markov) models are frequently cited as useful tools in the analysis of manpower planning problems. Rowland and Sovereign [14] have proposed the Markov model to study the internal manpower supply of firms, while Eaton [7] has proposed Markov chain analysis to study mass layoff problems, especially those caused by layoffs at major aircraft manufacturers. Uyar [17] has used the Markov model to study manpower replacement needs of the New England Telephone Company. Vroom and MacCrimmon [18] have applied the Markov model to the manpower planning problems of a "large industrial firm." Blakely [4] and Nielsen and Young [12] have explained the Markov model in elementary terms, while Marshall [11] has compared the Markov model and the so-called cohort model in a precise theoretical manner. Oliver [13] has used the Markov model to predict student flows at the University of California, Berkeley, while Gani [8] has used it to study the Australian educational system, Clough and McReynolds [5] to study the Ontario, Canada educational system and Armitage and Smith [1] to study the English educational system.

Only the last two of the above mentioned studies explicitly include the transition fractions as control variables. There have also been a sequence of studies (Bartholomew [2], Davies [6], Grinold and Stanford [10] and [9], Stanford [15], Toole [16]) that have been concerned with the control of a graded manpower system whose dynamics is appropriately described by the Markov model. None of these studies, however, relates the transition fractions to policy or external market variables which is of particular interest in the study of firms or of the armed services. One effect of this omission has been noted by Bartholomew [3],

> "The basic Markov model described in this chapter and the various extensions outlined above all have an important defect--at least when applied to the flows of manpower in a firm. They all assume that individual behavior is unaffected by how individuals perceive their environment and, in particular, their promotion chances. It seems plausible to suppose that an individual's assessment of his promotion chances will affect the likelihood of his leaving. If this is so, our model ought to include a statistical relationship (probably lagged) between wastage rates and promotion rates."

This paper will examine the transition fractions in a hierarchical manpower model and propose a simple economic decision model that can be used to determine the manpower transition fractions as a function of labor market conditions, and the wage and promotion policies of the organization.

Section 2 describes the fractional flow model used in the paper, and outlines some of the difficulties one encounters in trying to interpret the transition fractions. Section 3 presents a simple economic choice model faced by members of the organization. This model allows us to calculate the expected present value of each position in the organization and the transition fractions. Section 4 discusses the sensitivity of the transition fractions and the values of positions, as functions of the underlying economic variables. This sensitivity information reinforces our faith in the model, since it concurs with intuitively obvious conclusions. Section 5 presents a useful extension of the model. In Section 6, we present a numerical example and briefly indicate how the model can be used to test the effects of alternative manpower policies or alternative assumptions about the labor market.

## 2. THE FRACTIONAL FLOW MODEL

Consider a manpower system with $n$ graded ranks, $i = 1, \ldots, n$. We shall use the following notation to describe the model:

$X_i(t)$ = the number of people in rank $i$ at time $t$ for $i = 1, \ldots, n$.

$f_i(t)$ = the number of appointees to rank $i$ between time $t - 1$ and time $t$ for $i = 1, \ldots, n$.

The basic assumption of the fractional flow model is that during any time period a constant fraction of the people in any given rank will move to any other given rank. This also implies that a constant fraction of the people in a given rank will leave the organization.

Therefore, we let:

$P_{ij}$ = the fraction of people in rank $i$ at the beginning of any time period that move to rank $j$ before the beginning of the next time period, for $i = 1, \ldots, n$ ; $j = 0, \ldots, n$ , where $j = 0$ denotes moves to outside of the organization and where $P_{ij} \geq 0$ , and $\sum_{j=0}^{n} P_{ij} = 1$ .

The model is then defined by the following system of equations:

$$X_i(t) = \sum_{k=1}^{n} X_k(t-1)P_{ki} + f_i(t) \quad \text{for} \quad i = 1, \ldots, n . \tag{2.1}$$

To simplify the analysis, one often considers the steady-state version of the above model. Recall that under the steady-state assumption the values of the model variables are not permitted to change over time. This implies that we may simplify the system of Equations (2.1) to:

$$X_i = \sum_{k=1}^{n} X_k P_{ki} + f_i \quad \text{for} \quad i = 1, \ldots, n . \tag{2.2}$$

We will make two further simplifying assumptions. First, we do not allow demotions which means that:

$$P_{ij} = 0 \quad \text{for} \quad j < i \quad \text{and} \quad j \neq 0 \,. \tag{2.3}$$

Second, we allow promotions of one rank only, which, taken in concert with the first assumption, means that:

$$P_{ij} = 0 \quad \text{for} \quad j \neq 0 \,,\ i \quad \text{or} \quad i + 1 \,, \tag{2.4}$$

thus $P_{io} + P_{ii} + P_{i,i+1} = 1$ for $i = 1, \ldots, n$ .

These two assumptions reduce the steady-state fractional flow model to:

$$\begin{aligned} X_1 &= X_1 P_{11} + f_1 \,, \\ X_i &= X_{i-1} P_{i-1,i} + X_i P_{ii} + f_i \quad \text{for} \quad i = 2, \ldots, n \,. \end{aligned} \tag{2.5}$$

It is possible to use the fractional flow model with the $P_{ij}$'s fixed at their current level as a matter of organizational policy. One then attempts to explore various operating policies within this policy framework. Another possibility is to vary the $P_{ij}$'s and interpret the results. This procedure implicitly assumes that some of the $P_{ij}$'s are within the control of the organization. However, the fact is that the values of the $P_{ij}$'s depend on the complex interaction of three economic agents: (1) the organization itself, (2) the organization's competitors, and (3) the individuals in the organization. Thus, the organization can only vary its pay scale, promotion policies, etc. in an attempt to influence these $P_{ij}$ values. The final resultant $P_{ij}$ values will depend, also, on what the organization's competitors are doing and the way in which the organization's members react to the policies of the organization and its competitors. This paper develops a simple model which is addressed to the question of how the organization actually does affect the resulting $P_{ij}$ values. The model is very

simple, which allows it to also be operational, but it is detailed enough to capture the flavor of the real world situation it is designed to describe.

## 3. A MODEL FOR DETERMINING TRANSITION FRACTIONS

As has already been indicated, the model developed in this section is designed to help an organization, interested in applying the fractional flow model to its manpower planning problems, to ascertain how it can manipulate the transition fractions, the $P_{ij}$'s , through its policy decisions. This purpose is reflected in the notation, where we let lower case letters correspond to variables completely under the organization's control and upper case letters correspond to those variables not completely under the organization's control.

The model considers the simultaneous interaction of the organization, its competitors in the manpower market and its employees in determining the transition fractions. The competitors of the organization come into play by making offers of employment to current organizational members. We assume here that an organizational member can potentially receive $M$ different offers. Denoting these potential offers by the subscript $j$ , we let $W_j$ be the expected present value of the jth offer a person may receive. This expected present value should ideally include any income an individual can expect to receive for the rest of his lifetime given that he actually accepts offer $j$ . In the case of multiple offers we consider an individual's "offer" to be his "best" offer, i.e., the one with the highest expected present value. We let $j = 0$ denote the condition that the individual being considered receives no offer at all and definitionally let $W_0 = 0$ . The fraction of people in rank $i$ who receive offer $j$ during a given time period is denoted by $R_{ij}$ . Clearly, $R_{ij} \geq 0$ , $\sum_{j=0}^{M} R_{ij} = 1$ for each $i$ . One can also interpret $R_{ij}$ as the probability that a person in grade $i$ can search for and obtain a job offer worth $W_j$ .

We next consider a simplified type of organizational promotion policy. One way the organization can dissuade people from leaving is to offer promotion to people who either have or are expected to receive offers from its competitors.

Recalling that the assumptions we made in Section 2 (and which were to be carried over to the present analysis) allow for promotions of one rank only, we let $q_{ij}$ be the fraction of people who are in rank $i$ and who receive offer $j$, who are in turn offered promotion to rank $i + 1$ in the organization. Although the act of offering promotion can be considered as a counter-offer here, it is important to note that the actual time sequencing of the process is not important. It is the combined actions of the organization and its competitors which are important. The individuals base their stay versus leave decisions on the results of both of these actions. In other words, a person may be offered a promotion before he receives any outside offer at all, but as long as he receives an offer before deciding whether to stay or leave, his decision will be the same as if he had received the outside offer first and the offer of promotion as a counter measure.

At this point, we need to define some additional notation. Let $s_i$ for $i = 1, \ldots, n$ be the annual compensation for a person in rank $i$, and define $V_i$ as the expected present value of a position in rank $i$.

The above discussion leads us quite naturally into a discussion of the third and final set of actors in our model; the individuals in the organization. To handle the aggregate decisions made by this important set of economic actors, we utilize a response or "leave" function for each rank. These functions, denoted by $L_i(W_j, V_i)$ give the fraction of people in rank $i$ who leave the organization to take an outside offer as a function of the (expected discounted) value of the outside offer, $W_j$, and the (expected discounted) value of the rank they are currently in, $V_i$. It is assumed that these functions have a value of zero unless the values of the outside offer, $W_j$, is greater than the value of the current position, $V_i$. This assumption simplifies the computations and is quite plausible in view of the fact that the difference, $W_j - V_i$, may be easily compared to the transaction cost of making the appropriate move. This transaction cost includes not only the actual physical cost of moving, but also such implicit costs as the cost of having to leave friends and colleges and possibly even the cost of having

to move away from a 'erred environment. This transaction cost would, of course, vary from person to person which accounts for the necessity of a function to give the fraction that actually do leave based on its expected value. In view of an alternative interpretation of the $L_i$ functions as the probability that a randomly chosen person in rank $i$ will leave given his offer and counter-offer conditions, some sort of cumulative distribution functions would be logical candidates for their functional forms. In order to simplify the notation, we definitionally let:

$$H_{ij} = L_i(W_j, V_i)$$

and

$$L_{ij} = L_{i+1}(W_j, V_{i+1}) \ .$$

We illustrate the conceptual framework for an examp!· with $M = 1$ . The probability tree for this process is shown in Figure 1. Here the round nodes indicate chance events and the square nodes indicate decisions by individuals.

In an operational sense the $W_j$'s in these relations represent the average discounted lifetime earnings of people in rank $i$ who have accepted offer $j$ in the past. Ine $V_i$'s , the "values" of the various ranks, could similarly be obtained from historical records, but to obtain them in this manner would be decidedly contrary to our purposes here. After all, our interest here is precisely in how an organization can affect the values of its own transition fractions. Surely, one of its most effective tools for doing this is its ability to affect the value of its own positions. Fortunately, the framework already developed allows us to write a simple recursive relation which can be used to evaluate the $V_i$'s . Letting $\alpha$ be the one period discount factor, such a recursive relationship is:

$$V_i = s_i + \alpha \sum_{j=0}^{M} R_{ij} \Big\{ q_{ij} [W_j L_{ij} + V_{i+1}(1 - L_{ij})] + (1 - q_{ij})[W_j H_{ij} + V_i(1 - H_{ij})] \Big\} \ . \tag{3.1}$$

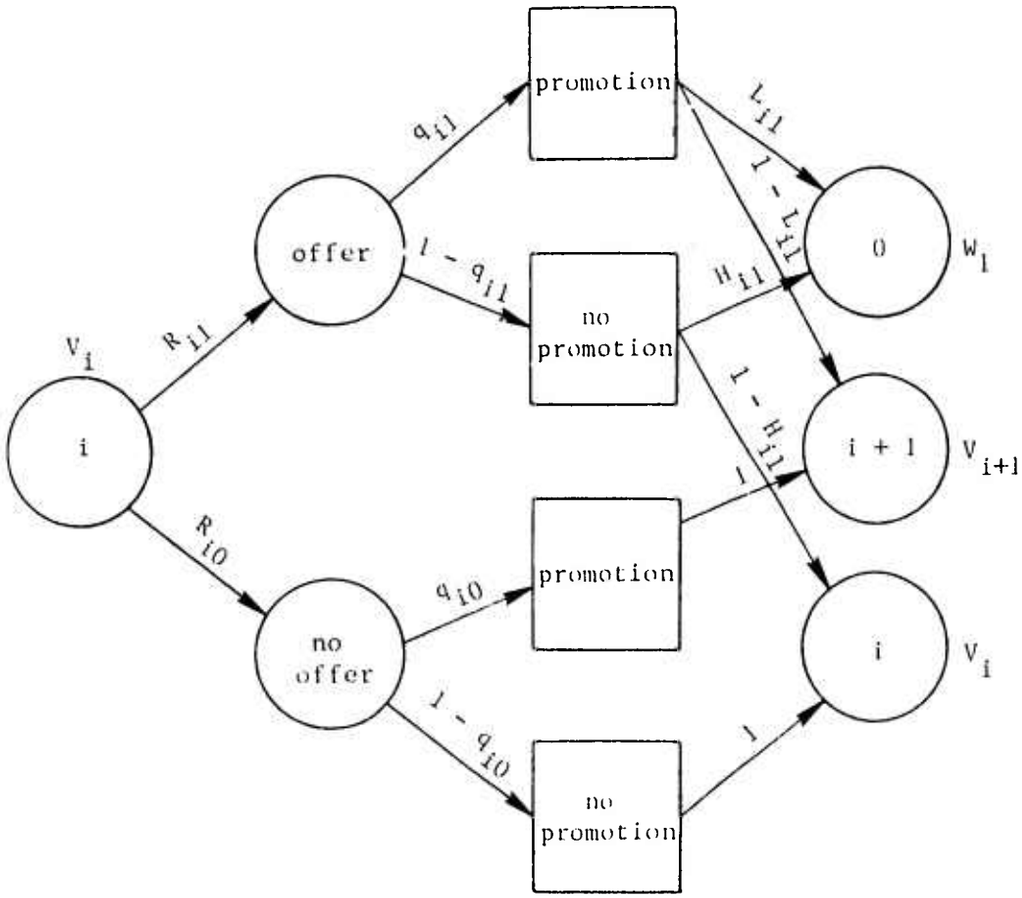
promotion
$q_{i1}$
$L_{i1}$
$1 - L_{i1}$
offer
$1 - q_{i1}$
0
$W_1$
$H_{i1}$
no promotion
$V_i$
$R_{i1}$
$1 - H_{i1}$
i
i + 1
$V_{i+1}$
1
$R_{i0}$
promotion
$q_{i0}$
no offer
i
$V_i$
$1 - q_{i0}$
1
no promotion

FIGURE 1

In view of the unbounded horizon form of this recursion, we would do well to interpret the $V_i$'s as the expected value of the given position over time rather than its expected value to any one individual. Upon rearrangement, (3.1) becomes:

$$V_i = s_i + \alpha \sum_{j=0}^{M} R_{ij}\Big\{q_{ij}[V_{i+1} + (W_j - V_{i+1})L_{ij}] + (1 - q_{ij})[V_i + (W_j - V_i)H_{ij}]\Big\} . \tag{3.2}$$

For $i = n$, since people in the highest rank cannot be promoted, $q_{nj} = 0$ and (3.2) simplifies to:

$$V_n = s_n + \alpha \sum_{j=0}^{M} R_{nj}[V_n + (W_j - V_n)H_{nj}] \tag{3.3}$$

or

$$V_n = f(V_n) = \frac{s_n}{1 - \alpha} + \frac{\alpha}{1 - \alpha} \sum_{j=0}^{M} R_{nj}(W_j - V_n)H_{nj} . \tag{3.4}$$

When $V_n = 0$, $f(V_n)$ clearly has a positive value. We can also calculate the derivative of $f(V_n)$ :

$$f'(V_n) = \frac{\alpha}{1 - \alpha} \sum_{j=0}^{M} R_{nj}\left[(W_j - V_n) \frac{\partial H_{nj}}{\partial V_n} - H_{nj}\right] . \tag{3.5}$$

We assume, at this point, that each $H_{ij}$ is differentiable, that $\frac{\partial H_{ij}}{\partial V_i} < 0$ if $W_j > V_i$ and that $\frac{\partial H_{ij}}{\partial V_i} = 0$ if $W_j \leq V_i$ for all $i$ and $j$. This differentiability assumption is met by many cumulative distribution functions and the nonpositiveness of the derivative of each $H_{ij}$ with respect to the corresponding $V_i$ simply reflects the fact that we wouldn't expect an increase in the expected present value of any organizational position to increase the fraction of people

that leave that rank to accept a given offer. Also assuming that $\alpha < 1$, we can see from (3.5) that $f'(V_n)$ is nonpositive, as if $W_j - V_n$ is less than or equal to zero, $\frac{\partial H_{nj}}{\partial V_n}$ equals zero and if $W_j - V_n$ is greater than zero, $\frac{\partial H_{nj}}{\partial V_n}$ is less than zero. Therefore, since $V_n$ strictly increases from a value of zero as $V_n$ increases and $f(V_n)$ does not increase from a positive value at $V_n = 0$ as $V_n$ increases, both the existence and uniqueness of a solution for $V_n$ are guaranteed. We can therefore utilize a simple search method (e.g., Newton's Method) in order to calculate $V_n$. By using (3.2), it is now easy to see how we can evaluate all the $V_i$'s recursively. Given that $V_{i+1}$ is known and letting $(1 - q_{ij})R_{ij} \triangleq \tilde{R}_{ij}$, (3.2) may be written as:

$$V_i = C_i + \alpha \sum_{j=0}^{M} \tilde{R}_{ij} V_i + \alpha \sum_{j=0}^{M} \tilde{R}_{ij}(W_j - V_i)H_{ij} \tag{3.6}$$

where $C_i = s_i + \alpha \sum_{j=0}^{M} R_{ij} q_{ij}[V_{i+1} + (W_j - V_{i+1})L_{ij}]$ and is a constant when $V_{i+1}$ is known. We can now derive relations analogous to (3.4) and (3.5) as follows:

$$V_i = f(V_i) = \frac{C_i}{1 - \alpha \sum_{j=0}^{M} \tilde{R}_{ij}} + \frac{\alpha}{1 - \alpha \sum_{j=0}^{M} \tilde{R}_{ij}} \sum_{j=0}^{M} \tilde{R}_{ij}(W_j - V_i)H_{ij} \tag{3.7}$$

and

$$f'(V_i) = \frac{\alpha}{1 - \alpha \sum_{j=0}^{M} \tilde{R}_{ij}} \sum_{j=0}^{M} R_{ij}\left[(W_j - V_i)\frac{\partial H_{ij}}{\partial V_i} - H_{ij}\right]. \tag{3.8}$$

Consequently, we can use arguments analogous to those we used for the $V_n$ case to show how to solve for unique values for each $V_i$.

Having introduced all the necessary notation, we are now in a position to write expressions for the transition fractions required by the fractional flow manpower planning model. We include an expression for the $P_{io}$'s, as although they are not required by the form of the fractional flow model developed in Section 2, they would probably prove useful in any attempt to calibrate the model as they give predictions for relatively easily obtainable data:

$$
\begin{aligned}
P_{io} &= \sum_{j=0}^{M} R_{ij}[q_{ij}L_{ij} + (1 - q_{ij})H_{ij}] \\
P_{i,i+1} &= \sum_{j=0}^{M} R_{ij}[q_{ij}(1 - L_{ij})] \qquad (3.9) \\
P_{ii} &= \sum_{j=0}^{M} R_{ij}(1 - q_{ij})(1 - H_{ij}) \ .
\end{aligned}
$$

The relations (3.1) and (3.9) taken together serve as a complete characterization of our model for determining the transition fractions in the fractional flow model developed in Section 2.

## 4. SENSITIVITY ANALYSIS

In this section, we explore the sensitivity of the model predictions to changes in the basic model parameters. This endeavor serves a two-fold purpose. First, by verifying the signs of those sensitivity derivatives whose signs are intuitively obvious to us, our faith in the model is reinforced. Second, the calculation of those sensitivity derivates whose signs are not obvious to us gives operational predictions for actual applications of the model. We obtain not only the expected sign of the change in the model prediction due to a change in a particular model parameter, but also the local magnitude of such a change. In other words, we can ascertain not only which policy tools will move our manpower system in a desired direction but also which of these policy tools will be most effective in doing so. Although sensitivity derivatives have been calculated for the model in its most general form where $n$ ranks and $M$ possible offers are considered, the results tend to be quite complex and nearly impossible to conjecture about on intuitive grounds. Consequently, we will present the sensitivity derivatives for a simplified system in which people in each rank can obtain only a single distinct offer. Consideration of this simplified system allows us to demonstrate some basic underlying relationships inherent in the model, without undue computational complexity. Letting $W_i$ be the only offer available to people in rank $i$, we may summarize the model described above in terms of the relations (2.5), (3.1) and (3.9) as:

$$
\begin{aligned}
V_i &= s_i + \alpha\{R_{ii}[q_{ii}(W_i L_{ii} + V_{i+1}(1 - L_{ii})) + (1 - q_{ii})(W_i H_{ii} + V_i(1 - H_{ii}))] \\
&\qquad + (1 - R_{ii})[q_{io} V_{i+1} + (1 - q_{io}) V_i]\} \\
P_{io} &= R_{ii}[q_{ii} L_{ii} + (1 - q_{ii}) H_{ii}] \\
P_{i,i+1} &= R_{ii} q_{ii}(1 - L_{ii}) + (1 - R_{ii}) q_{io} \\
P_{ii} &= R_{ii}(1 - q_{ii})(1 - H_{ii}) + (1 - R_{ii})(1 - q_{io}) \\
X_i &= X_{i-1} P_{i-1,i} + X_i P_{ii} + t_i \, .
\end{aligned}
\tag{4.1}
$$

We have calculated the partials of $V_i$, $P_{io}$, $P_{i,i+1}$, $P_{ii}$ and $X_i$ with respect to $s_i$, $R_{ii}$, $q_{ii}$, $q_{io}$, $W_i$ and $\alpha$. The signs of these partial derivatives, under plausible assumptions on the $L_{ii}$ and $H_{ii}$ functions, are summarized in Table 1. We demonstrate our method by giving analytical expressions for several of these partial derivatives.

If we assume that $\frac{\partial H_{ii}}{\partial W_i} > 0$ if $W_i > V_i$ and $\frac{\partial H_{ii}}{\partial W_i} = 0$ if $W_i \leq V_i$ and similar conditions on $L_{ii}$ (note these conditions are similar to our assumption about $\frac{\partial H_{ii}}{\partial V_i}$, but opposite in sign), it would seem plausible to expect the expected value of being in rank $i$ to increase as the size of the outside offer that the organizational members in rank $i$ may receive increases. Analytically, this is easy to verify as:

$$(4.2) \quad \frac{\partial V_i}{\partial W_i} = \frac{\alpha R_{ii} q_{ii}\left[(W_i - V_{i+1})\frac{\partial L_{ii}}{\partial W_i} + L_{ii}\right] + \alpha R_{ii}(1-q_{ii})\left[(W_i - V_i)\frac{\partial H_{ii}}{\partial W_i}\right]}{1 - \alpha R_{ii}(1-q_{ii})(W_i - V_i)\frac{\partial H_{ii}}{\partial V_i} - R_{ii}(1-q_{ii})(1-H_{ii}) - (1-R_{ii})(1-q_{io})} \geq 0$$

under the assumptions on the $L_{ii}$ and $H_{ii}$ functions that have been stated thus far. An additional assumption about $H_{ii}$ that is necessary for realism is that $\frac{\partial H_{ii}}{\partial W_i} + \frac{\partial H_{ii}}{\partial V_i}\frac{\partial V_i}{\partial W_i} \geq 0$, which means that the fraction of people in rank $i$ who receive an outside offer and no offer of promotion who leave the organization to take the outside offer increases as $W_i$ is increased, although the increase in $W_i$ does have a second order effect of increasing the value of the original rank $i$. Under this additional assumption about $H_{ii}$, we can show that, as we would expect, $\frac{\partial P_{io}}{\partial W_i} \geq 0$, as:

With Respect To

| Derivative Of | $s_i$ | $\alpha$ | $R_{ii}$ | $q_{ii}$ | $q_{io}$ | $W_i$ |
|---|---|---|---|---|---|---|
| $V_i$ | + | + | + | + | + | + |
| $P_{io}$ | - | - | $\pm$ | - | - | + |
| $P_{i,i+1}$ | + | + | $\pm$ | + | + | - |
| $P_{ii}$ | + | + | $\pm$ | $\pm$ | $\pm$ | - |
| $X_i$ | + | + | $\pm$ | $\pm$ | $\pm$ | $\pm$ |

TABLE 1

$$(4.3) \qquad \frac{\partial P_{io}}{\partial W_i} = R_{ii}\left\{q_{ii}\frac{\partial L_{ii}}{\partial W_i} + (1 - q_{ii})\left[\frac{\partial H_{ii}}{\partial W_i} + \frac{\partial H_{ii}}{\partial V_i}\frac{\partial V_i}{\partial W_i}\right]\right\} \geq 0 .$$

Intuitively, one would expect the partial of the value of rank $i$ with respect to the fraction of people in rank $i$ who receive an outside offer and who also receive a counter-offer of promotion to rank $i + 1$ to be positive. Analytically, we obtain:

$$(4.4) \qquad \frac{\partial V_i}{\partial q_{ii}} = \frac{\alpha R_{ii}[W_i L_{ii} + V_{i+1}(1 - L_{ii})] - \alpha R_{ii}[W_i H_{ii} + V_i(1 - H_{ii})]}{1 - \alpha R_{ii}(1 - q_{ii})(W_i - V_i)\dfrac{\partial H_{ii}}{\partial V_i} - (1 - H_{ii})}$$

which is positive under the plausible conditions that $V_{i+1} \cdot V_i$ and $L_{ii} \cdot H_{ii}$. We would expect the partial of $P_{ii}$ with respect to $q_{ii}$ to be indeterminant on a priori grounds. Analytically, we get:

$$(4.5) \qquad \frac{\partial P_{ii}}{\partial q_{ii}} = R_{ii}(1 - q_{ii})\left(-\frac{\partial H_{ii}}{\partial V_i}\right)\frac{\partial V_i}{\partial q_{ii}} + (1 - H_{ii})(-R_{ii}) .$$

The first term in this expression represents the fact that as $q_{ii}$ is increased the value of rank $i$ is increased, which causes more people who are not offered promotion to rank $i + 1$ to stay in rank $i$ rather than accept the outside offer. The second term represents the fact that as $q_{ii}$ is increased more people will leave rank $i$ to go to rank $i + 1$. So, in general, the effect on the fraction of people who remain in rank $i$ as $q_{ii}$ is increased is not determinable on a priori grounds. Given numerical values for the parameters, however, the sign of this partial derivative could be quite useful for planning purposes.

## 5. AN EXTENSION

Up to now, we have assumed that the only way in which an individual can leave the organization is to take a position in some other organization. We have neglected in our model the possibility that in general people can also leave an organization by dying, retiring or being fired. If we are willing to base the expected fractions of people who leave by these additional means upon the rank they are in and possibly their offer-counter-offer status, extensions of the present model to include these additional factors are straightforward.

To handle the fact that people die, we consider the probabilities $P_{io}$, $P_{i,i+1}$, $P_{ii}$ now predicted by the model to be conditional on the survival of the organizational members. Then if we let $\beta_i$ be the fraction of people in rank $i$ who are expected to die per year, the actual fraction $\tilde{P}_{ii}$, $\tilde{P}_{i,i+1}$, and $\tilde{P}_{io}$ may be simply obtained from the $P_{ij}$'s already calculated as:

$$\tilde{P}_{ii} = P_{ii}(1 - \beta_i)$$

$$\tilde{P}_{i,i+1} = P_{i,i+1}(1 - \beta_i) \tag{5.1}$$

$$\tilde{P}_{io} = (1 - \beta_i)P_{io} + \beta_i \ .$$

Notice that we have implicitly assumed here that people don't take into account the fact that they might die in calculating their future income streams.

To handle the fact that people may retire from the organization, we can let $r_i$ be the fraction of people in rank $i$ who retire per year so that $\sum_{j=0}^{M} R_{ij} = 1 - r_i$ and we let $A_i$ be the present value of the annuity a person who retires from rank $i$ receives. If we further let $f_{ij}$ be the fraction of people in rank $i$ who have received offer $j$ and who are fired, we may finally rewrite the model specification (3.1) and (3.9) as:

$$V_i = s_i + \alpha \left\{ \sum_{j=0}^{M} R_{ij}[q_{ij}(W_j L_{ij} + V_{i+1}(1 - L_{ij})) + f_{ij} W_j + (1 - f_{ij} - q_{ij})(W_j H_{ij} + V_i(1 - H_{ij}))] + r_i A_i \right\}$$

$$(5.2) \quad \tilde{P}_{io} = (1 - \beta_i) \sum_{j=0}^{M} R_{ij}[q_{ij} L_{ij} + f_{ij} + (1 - f_{ij} - q_{ij}) H_{ij}] + r_i + \beta_i$$

$$\tilde{P}_{i,i+1} = (1 - \beta_i) \sum_{j=0}^{M} R_{ij}[q_{ij}(1 - L_{ij})]$$

$$\tilde{P}_{ii} = (1 - \beta_i) \sum_{j=0}^{M} R_{ij}(1 - f_{ij} - q_{ij})(1 - H_{ij})$$

where $W_o$ corresponds, here, to the expected present value a person who either leaves without an offer or is fired can expect to obtain. This extended model, while more complex notationally, is almost as easy to analyze as the model analyzed in this paper.

One might still object to the lack of inclusion of the equilibrium age distribution of the organizational members as a predictor of the retirement and dying fractions. It would not be theoretically difficult to adjust the arguments in earlier sections to the case where the rank $i$ implicitly contains some information about the individual's age. We could consider a rank space where an individual moves from $(i,t)$ to $(i, t+1)$ or $(i+1, t+1)$.

A further extension would be to include people's attitude towards risk in the model by including the variances of the expected discounted income streams as arguments of the "leave" functions.

## 6. AN EXAMPLE

In this section, we present a hypothetical example of the model specified by the relations (5.1) (which are in turn based on the relations (3.1) and (3.9)). For the purposes of this example, we simplified the model in two ways. First, each rank, $i$, in the organization was (as in Section 4) assumed to have associated with it a unique outside offer, $W_i$. Consequently, the arrays of variables, $(R_{ii})$, $(q_{io})$, and $(q_{ii})$ can be represented as vectors rather than matrices, as they would be in the more general case. Second the "leave" function for each rank was taken to be simply $L_{ii} = \left(1 - e^{-G_i(W_i - V_i)}\right)$ where $G_i$ is a constant which applies to rank $i$. The example dealt with a hypothetical organization with 8 ranks and two different cases were considered. The first case will be presented, the modifications necessary for the second case will then be given and finally the two cases will be compared.

In the first case, the following data was used (for easy reference a short definition of each variable is given):

$(W_i)$ = (vector giving the unique outside offer an organizational member in rank $i$ may obtain)

= (219,000 232,000 247,000 260,000 280,000 300,000 320,000 340,000)

$(R_{ii})$ = (vector giving the fraction of people in rank $i$ who receive the potential outside offer corresponding to that rank)

= (.40 .40 .30 .30 .15 .15 .10 .10)

(6.1) $(s_i)$ = (vector giving the salary paid to organizational members in rank $i$)

= (4,000 5,000 6,000 7,000 8,500 10,000 12,000 14,000)

$(q_{ii})$ = (vector giving the fraction of people in rank $i$ who receive an outside offer and a counter-offer of promotion)

= (.3 .3 .3 .3 .4 .4 .5 0)

$(q_{io})$ = (vector giving the fraction of people in rank $i$ who don't receive an outside offer, but who do receive an offer of promotion)

$= (.2 \quad .2 \quad .2 \quad .2 \quad .1 \quad .1 \quad .1 \quad 0)$

$(\beta_i)$ = (vector giving the fraction of people in rank $i$ who die each year)

$= (.001 \quad .001 \quad .001 \quad .002 \quad .002 \quad .002 \quad .005 \quad .005)$

$(G_i)$ = (vector giving the parameters necessary for the "leave" functions)

$= (.00007 \quad .000065 \quad .000060 \quad .000050 \quad .00004 \quad .00003 \quad .00002 \quad .00001)$

Using an APL computer program the calculations required by the relations (3.1), (3.9), and (5.1) were performed, yielding the following results:

$(V_i)$ = (vector giving the "values" of each rank)

$= (205{,}300 \quad 218{,}600 \quad 231{,}500 \quad 244{,}800 \quad 258{,}100 \quad 276{,}800 \quad 292{,}200 \quad 302{,}400)$

$(\tilde{P}_{io})$ = (fraction of people in rank $i$ who leave the organization)

(6.2) $= (.1771 \quad .1671 \quad .1373 \quad .1201 \quad .0598 \quad .0556 \quad .0342 \quad .0362)$

$(\tilde{P}_{ii})$ = (fraction of people in rank $i$ who remain in rank $i$)

$= (.5864 \quad .5964 \quad .6424 \quad .6568 \quad .8009 \quad .8083 \quad .8345 \quad .9635)$

$(\tilde{P}_{i,i+1})$ = (fraction of people in rank $i$ who get promoted)

$= (.2365 \quad .2365 \quad .2203 \quad .2231 \quad .1393 \quad .1361 \quad .1313 \quad .0000)$

Having successfully constructed the $P$ matrix required by the fractional flow model given by (2.5), we specified a (hypothetical) vector of appointments, $(f_i)$, to allow us to actually calculate results for that model. Here we let:

$(f_i)$ = (number of appointees to rank $i$ each year)

(6.3) $= (20 \quad 20 \quad 20 \quad 10 \quad 10 \quad 10 \quad 5 \quad 5)$

Using another APL program to do the calculations required by (2.5), the following results were obtained:

$(X_i)$ = (number of people in rank $i$)

(6.4) $= (48.36 \quad 77.88 \quad 107.4 \quad 98.12 \quad 160.2 \quad 168.5 \quad 168.8 \quad 750.4)$

Total organizational size = 1580

Total yearly budget = \$17,490,000

Whereas Case I dealt with an organization with fairly constant promotion possibilities throughout, Case II deals with an organization which is identical to the one in Case I except for the fact that the promotion fractions from rank 3 to rank 4 are drastically reduced. An example of this type of organization might be a university faculty in which promotion from the nontenure to the tenure ranks is rare. Therefore, the only difference between the input data for Case I given in (6.1) and the input data for Case II was in the $(q_{ii})$ and $(q_{io})$ vectors. The values used for Case II were:

$$(6.5)\qquad \begin{aligned}(q_{ii}) &= (.3 \quad .3 \quad .1 \quad .3 \quad .4 \quad .4 \quad .5 \quad 0)\\ (q_{io}) &= (.2 \quad .2 \quad .1 \quad .2 \quad .1 \quad .1 \quad .1 \quad 0)\end{aligned}$$

The transition fractions for this case turned out to be:

$$(6.6)\qquad \begin{aligned}(\tilde{P}_{io}) &= (.1885 \quad .1995 \quad .1890 \quad .1201 \quad .0598 \quad .0556 \quad .0342 \quad .0362)\\ (\tilde{P}_{ii}) &= (.5836 \quad .5878 \quad .7143 \quad .6568 \quad .8009 \quad .8083 \quad .8345 \quad .9638)\\ (\tilde{P}_{i,i+1}) &= (.2279 \quad .2127 \quad .0967 \quad .2230 \quad .1393 \quad .1361 \quad .1313 \quad .0000)\end{aligned}$$

Then, using the same vector of appointees, $(f_i)$, given in (6.3), the following equilibrium values were obtained for Case II:

$$(6.7)\qquad (X_i) = (48.03 \quad 75.07 \quad 125.9 \quad 64.63 \quad 122.7 \quad 141.3 \quad 146.4 \quad 669.1)$$

Total organizational size = 1393

Total yearly budget = \$15,350,000

Total organizational size = 1580

Total yearly budget = $17,490,000

Whereas Case I dealt with an organization with fairly constant promotion possibilities throughout, Case II deals with an organization which is identical to the one in Case I except for the fact that the promotion fractions from rank 3 to rank 4 are drastically reduced. An example of this type of organization might be a university faculty in which promotion from the nontenure to the tenure ranks is rare. Therefore, the only difference between the input data for Case I given in (6.1) and the input data for Case II was in the $(q_{ii})$ and $(q_{io})$ vectors. The values used for Case II were:

$$(6.5)\qquad \begin{aligned}(q_{ii}) &= (.3 \quad .3 \quad .1 \quad .3 \quad .4 \quad .4 \quad .5 \quad 0)\\ (q_{io}) &= (.2 \quad .2 \quad .1 \quad .2 \quad .1 \quad .1 \quad .1 \quad 0)\end{aligned}$$

The transition fractions for this case turned out to be:

$$(6.6)\qquad \begin{aligned}(\tilde{P}_{io}) &= (.1885 \quad .1905 \quad .1890 \quad .1201 \quad .0598 \quad .0556 \quad .0342 \quad .0362)\\ (\tilde{P}_{ii}) &= (.5836 \quad .5878 \quad .7143 \quad .6568 \quad .8009 \quad .8083 \quad .8345 \quad .9638)\\ (\tilde{P}_{i,i+1}) &= (.2279 \quad .2127 \quad .0967 \quad .2230 \quad .1393 \quad .1361 \quad .1313 \quad .0000)\end{aligned}$$

Then, using the same vector of appointees, $(f_i)$, given in (6.3), the following equilibrium values were obtained for Case II:

$$(6.7)\qquad (X_i) = (48.03 \quad 75.07 \quad 125.9 \quad 64.63 \quad 122.7 \quad 141.3 \quad 146.4 \quad 669.1)$$

Total organizational size = 1393

Total yearly budget = $15,350,000

Comparing the results for the two cases, we see that for Case II about 6% more of the people in the organization leave the organization from rank 3 and that slightly more people leave from ranks 1 and 2. Comparing (6.4) and (6.7), we see that the simple act of cutting off promotions from rank 3 to rank 4 drastically modifies the configuration of the organization for rank 3 and above. To illustrate this point more graphically, we calculated the appointment vector, $(f_i)$, for Case II that would make the equilibrium distribution for Case II identical to that for Case I. This appointment vector was:

$$(f_i) = (20.14 \quad 21.07 \quad 14.13 \quad 23.28 \quad 10 \quad 10 \quad 5 \quad 5) \tag{6.8}$$

So that (comparing (6.8) with (6.3)) we see that to compensate for less promotions from rank 3 to rank 4, fewer people need to be hired into rank 3 even though more people leave the organization from that rank, which is a not altogether intuitive result. This is because the reduction in people promoted from rank 3 more than compensates for the increase in people who leave the organization from that rank. It is also necessary to hire more people into rank 4 as we might have expected.

This simple example was not designed to demonstrate the entire range of applicability of the model, but rather to give the reader a feel for how the model might profitably be used in practical applications.

## 7. SUMMARY

As promised, the model described above and embodied in the relations (3.1) and (3.9) shows how three distinct economic agents influence the transition fractions ordinarily required by the fractional flow model. The competitors exert their influence by setting the $R_{ij}$ and $W_j$ parameters. The individuals in the organization make their influence felt by setting the parameters and form of the $L_{ij}$ and $H_{ij}$ functions. The organization itself influences the transition fractions by manipulating the $q_{ij}$'s and the $s_i$'s .

We have proposed this model as a planning tool for use by a specific organization. The model indicates the manner in which the organization can manipulate its transition fractions by varying its salary scale and promotion policies. We have neglected secondary effects such as possible retaliation of competitors to the actions of the organization. Such retaliation could involve changing their $R_{ij}$ and $W_j$ parameters from their preliminary values. So, what we have here is a partial equilibrium analysis similar to those utilized in economics. It is clear, however, that although some realism has been lost by adopting only a partial equilibrium approach an appropriate general equilibrium model would be exceedingly abstract and not at all operational. Finally, we point out that in order to ease the notation, while still showing all the significant relationships involved, we have chosen to describe the model as it relates to a very simple form of the fractional flow model. The extension to more general forms of the fractional flow model should be immediate.

## REFERENCES


[1] Armitage, P. and C. Smith, "The Development of Computable Models of the British Educational System and Their Possible Uses," Mathematical Models in Educational Planning, O.E.C.D., Paris, (1967).

[2] Bartholomew, D. J., "A Mathematical Analysis of Structural Control in a Graded Manpower System," Report P-4, Ford Foundation Program for Research in University Administration, Office of the Vice President for Planning, University of California, Berkeley, (1969).

[3] Bartholomew, D. J., STOCHASTIC MODELS FOR SOCIAL PROCESSES, 2nd Edition, John Wiley and Sons, London, (1974).

[4] Blakely, R., "Markov Models and Manpower Planning," Industrial Management Review, (Winter 1970).

[5] Clough, D. and W. McReynolds, "State Transition Model of an Educational System Incorporating a Constraint Theory of Supply and Demand," Ontario Journal of Educational Research, (1966).

[6] Davies, G. S., "Structural Control in a Graded Manpower System," Management Science, (September 1973).

[7] Eaton, B. C., "Studying Mass Layoff Through Markov Chains," Industrial Relations, (October 1970).

[8] Gani, J., "Formulae for Projecting Enrollments and Degrees Awarded in Universities," Journal of the Royal Statistical Society, Series A, (1963).

[9] Grinold, R. C. and R. E. Stanford, "Optimal Control of a Graded Manpower System," ORC 73-8, Operations Research Center, University of California, Berkeley, (1973).

[10] Grinold, R. C. and R. E. Stanford, "Limiting Distributions in a Linear Fractional Flow Model," ORC 73-16, Operations Research Center, University of California, Berkeley, (1973).

[11] Marshall, K. T., "A Comparison of Two Personnel Prediction Models," Operations Research, (May-June 1973).

[12] Nielsen, G. and A. Young, "Manpower Planning: A Markov Chain Application," Public Personnel Management, (April 1973).

[13] Oliver, R. M., "Models for Predicting Gross Enrollments at the University of California," Report 68-3, Ford Foundation Program for Research in University Administration, Office of the Vice President for Planning, University of California, Berkeley, (1968).

[14] Rowland, M. and M. Sovereign, "Markov Chain Analysis of Internal Manpower Supply," Industrial Relations, (October 1969).

[15] Stanford, R. E., "Optimal Control of a Graded Manpower System," ORC 71-20, Operations Research Center, University of California, Berkeley, (1971).

[16] Toole, P. J., "An Appointment, Promotion, and Retirement Model for a Graded Manpower System of Total Fixed Size," ORC 71-21, Operations Research Center, University of California, Berkeley, (1971).

[17] Uyar, K., "Markov Chain Forecasts of Employee Replacement Needs," Industrial Relations, (February 1972).

[18] Vroom, V. and K. MacCrimmon, "Toward a Stochastic Model of Managerial Careers," Administrative Science Quarterly, (June 1968).