LWL
CR-02E73
c. 1

TECHNICAL REPORT NO. LWL-CR-02E73

MULTISHOT THERMAL BATTERY

by

Alan A. Schneider; Supervising Chemist
Stephen E. Long; Supervising Engineer
George C. Bowser; Supervising Engineer

TECHNICAL LIBRARY
BLDG. 305
ABERDEEN PROVING GROUND, MD.
STEAP-TL
COUNTED IN

20081009 232

June 1974

Final Report

Contract No. DAAD05-73-C-0555

APPROVED FOR PUBLIC RELEASE; DISTRIBUTION UNLIMITED

LWL
CR-02E73
c. 1

U. S. ARMY LAND WARFARE LABORATORY
Aberdeen Proving Ground, Maryland 21005

DISCLAIMER

The findings in this report are not to be construed as an official Department of the Army position unless so designated by other authorized documents.

SECURITY CLASSIFICATION OF THIS PAGE (When Data Entered)

REPORT DOCUMENTATION PAGE

READ INSTRUCTIONS BEFORE COMPLETING FORM

1. REPORT NUMBER

2. GOVT ACCESSION NO.

3. RECIPIENT'S CATALOG NUMBER

4. TITLE (and Subtitle)

MULTISHOT THERMAL BATTERY

5. TYPE OF REPORT & PERIOD COVERED

6. PERFORMING ORG. REPORT NUMBER

LWL-CR-02E73

7. AUTHOR(s)

8. CONTRACT OR GRANT NUMBER(s)

DAAD05-73-C-0555

9. PERFORMING ORGANIZATION NAME AND ADDRESS

Catalyst Research Corporation
1421 Clarkview Road
Baltimore, Maryland 21209

10. PROGRAM ELEMENT, PROJECT, TASK AREA & WORK UNIT NUMBERS

LWL Task 02-E-73

11. CONTROLLING OFFICE NAME AND ADDRESS

US Army Land Warfare Laboratory
Aberdeen Proving Ground, Maryland 21005

12. REPORT DATE

June 1974

13. NUMBER OF PAGES

14. MONITORING AGENCY NAME & ADDRESS(if different from Controlling Office)

15. SECURITY CLASS. (of this report)

Unclassified

15a. DECLASSIFICATION/DOWNGRADING SCHEDULE

16. DISTRIBUTION STATEMENT (of this Report)

APPROVED FOR PUBLIC RELEASE; DISTRIBUTION UNLIMITED

17. DISTRIBUTION STATEMENT (of the abstract entered in Block 20, if different from Report)

TECHNICAL LIBRARY
BLDG. 305
ABERDEEN PROVING GROUND, MD.
STEAP-TL

18. SUPPLEMENTARY NOTES

19. KEY WORDS (Continue on reverse side if necessary and identify by block number)

Electrical Power Sources
Chemical Power Sources
Batteries (Elect.)
Thermal Batteries (Elect.)
Emergency Power Sources (Elect.)
Tactical Power Sources (Elect.)

20. ABSTRACT (Continue on reverse side if necessary and identify by block number)

A summary of the development of a multishot thermal battery is presented. The battery is designed to power the AN/PRC-77 radio for at least four ten-minute cycles.

Test regimens are described and test results detailed showing that the battery will meet electrical specifications when subjected to environmental preconditionings such as heat, cold, wind, vibration and dropping. Detailed engineering drawings have been prepared (a set is included in this report)

DD FORM 1 JAN 73 1473 EDITION OF 1 NOV 65 IS OBSOLETE

SECURITY CLASSIFICATION OF THIS PAGE (When Data Entered)

20. ABSTRACT CON'T

and a set of operating instructions has been written (Appendix B, this report).

A brief description of some of the tests which led to the choice of cell chemistry is included. A chronological description of design improvements is given, from the first working prototype which was capable of four cycles to the final version which is capable of at least five reliable cycles.

AD-785584

TABLE OF CONTENTS

	Page
REPORT DOCUMENTATION PAGE (DD FORM 1473)	iii
INTRODUCTION	1
PHASE I	2
Cell Development	2
Fuel Evaluation	3
PHASE II	4
First Working Prototype	4
Final Design	7
Mechanical Design	7
Environmental Tests	10
PHASE III	16
CONCLUSIONS	17
RECOMMENDATIONS	18
APPENDICES:	
A. Drawings	A-1
B. Operating Instructions	B-1
DISTRIBUTION LIST	19

INTRODUCTION

The object of this study was the design and development of an externally heated multishot thermal battery which would power the AN/PRC-77 radio. The battery was to operate the radio for at least four cycles, each cycle consisting of five minutes of transmission followed by five minutes of reception. The battery was to be heated by a readily available military fuel such as trioxane.

Such a battery has been developed. When heated by trioxane, it is capable of operating the radio for as many as ten cycles. Activation times for the battery range from five minutes for the first few cycles to eight minutes for the final cycles.

The development of the battery was divided into three phases. Phase I involved the investigation of cell components such as anode, cathode and electrolyte. This phase also included investigation of the heat source and design of a battery case which would allow the cells to be heated quickly and efficiently. The culmination of Phase I was a proposed prototype design.

Phase II efforts centered on modification of the prototype design so that the battery would perform satisfactorily from an electrical and an operational standpoint. Burner height was increased to insure complete combustion of the fuel, cell spacing was adjusted for even heating of all cells, and design changes were incorporated which would make the system easier to use. Batteries were then subjected to environmental preconditioning and testing.

Based on these environmental test results, some minor changes were effected resulting in the final battery design. Phase III efforts centered on the production of twenty-five units of this design.

RESEARCH AND DEVELOPMENT PROGRAM

Phase I

Cell Development

The following materials were studied during the investigation of cell components:

1. Mg and Ca anodes.

2. LiCl-KCl and LiI-KI electrolytes.

3. $CaCrO_4$, FeS_2 and CuO depolarizers.

The cell of choice used a Ca anode, LiCl-KCl electrolyte and a $CaCrO_4$ cathode (depolarizer). The choice was based primarily on electrical performance and secondarily on prior experience with the system. Tests show that both the Mg anode and FeS_2 cathode would also prove acceptable.

Based on initial test data and some thermal calculations, it was determined that, to achieve rapid activation, each individual cell would have to be exposed to the hot combustion gases of the burning fuel. This meant hermetically sealing each cell in a separate case. Conventional battery construction wherein all cells are sealed in a single case could not be used because activation times would be extremely long.

Several cell configurations were investigated to arrive at a reliable, complete cell. Major problems which were overcome were: (1) swelling due to moisture and gaseous reaction products and (2) formation of Li-Ca alloy at a rate which caused internal shorting of the cell. The swelling problems were eliminated by vacuum drying all components and by heating each cell to its operational temperature before final sealing. The shorting problems were overcome when a "Fiberfrax" gasket was included in the cell to absorb any excess Li-Ca alloy.

The resulting cell, shown in drawing 405756 proved to be very reliable. No failures have been encountered in the testing of more than 100 such cells. The cell is capable of delivering one ampere at 510°C for more than one hour, equivalent to twelve five-minute transmit cycles.

The final cell uses two calcium bimetal anodes and two depolarizer pellets made from a homogeneous mixture of LiCl-KCl electrolyte, $CaCrO_4$ depolarizer, and "Cab-O-Sil" binder. A screen is included in the depolarizer to provide better electrical contact with the pellet. These components are assembled and inspected according to Flow Chart 405756. For more detail concerning the components and assembly techniques, the full drawing package should be consulted (Appendix A).

Fuel Evaluation

Both the standard trioxane tablet and the US Army Land Warfare Laboratory (USALWL) Delrin tablet were examined as fuels. The former was the fuel of choice because of its even burning characteristics and ease of ignition. However, Delrin tablets could be used as an alternate heat source.

Although the heat contents of trioxane and Delrin are very nearly the same (3980 cal/g and 4300 cal/g respectively), the Delrin is a denser fuel. Thus, with Delrin, more heat can be packaged per unit volume. However, the denser Delrin is also more difficult to light, and its burning rate is uneven and dependent on physical configuration of the tablets. It is these unfavorable characteristics which prompted the choice of trioxane as the primary fuel.

Phase II

First Working Prototype

Initial Phase II efforts centered on the modification of the Phase I prototype design to meet the performance goals, and the testing of this modified design. Burner height was increased to allow the fuel to burn completely. Modifications were made to the spacing between cells and to the end cell geometry so that the hot combustion gases would heat each cell evenly and at the same rate. A sketch of this modified design is given in Figure 1. It was this design which was first able to meet the electrical specifications for the battery.

One of the first successful tests using this design is shown in Figure 2. The lower graph shows the performance of the full six-cell battery during the first cycle while the upper graphs give the performance of two individual cells.

One and two-thirds bars of trioxane were ignited at time zero and the battery voltage was allowed to rise under no load. At 3 minutes (point A), a 100 ma constant current load was applied which drove the battery voltage negative. By 4 minutes the battery was able to sustain the 100 ma load showing a voltage greater than 15 volts. At four minutes (point B) a one ampere load was applied, slightly depressing the cell output. Not until the temperature of the top of the cell cases reached about 350°C was the battery able to deliver 10.8 volts at one ampere (1.8 volts/cell). This occurred at 4 1/2 minutes (point C) and was considered activation time for the battery. Cell voltage rose to 15 volts during the next five minutes under one ampere load. During this period the trioxane flame turned yellow (point D) and the cap was placed on the assembly when the flame went out entirely (point E). At 9 1/2 minutes the load was diminished to 100 ma (point F) and the battery was allowed to run an additional five minutes. At 14 1/2 minutes (point G), the one ampere load was reapplied for 30 seconds to determine whether transmission was possible at the end of a ten minute cycle. This was indeed the case; although battery voltage began to fall, the voltage at the end of the 30 second period was above 13 volts. At 15 minutes (point H), the 100 ma load was reapplied while the battery cooled and the electrolyte froze.

Since peak temperatures were not excessive during cycle 1, it was decided that two full bars of trioxane could be used in the following three cycles. Graphs of battery output for cycles 2, 3, and 4 are shown in Figure 3. As the number of cycles increased, the activation time increased. The time necessary to reach 10.8 volts under a one ampere load are as follows:

Cycle 1	4 1/2 min.
Cycle 2	5 1/4 min.
Cycle 3	5 1/4 min.
Cycle 4	6 1/4 min.

Reaction products accumulate as current is drawn from the cell, requiring higher and higher temperatures to maintain the load. Peak voltages under

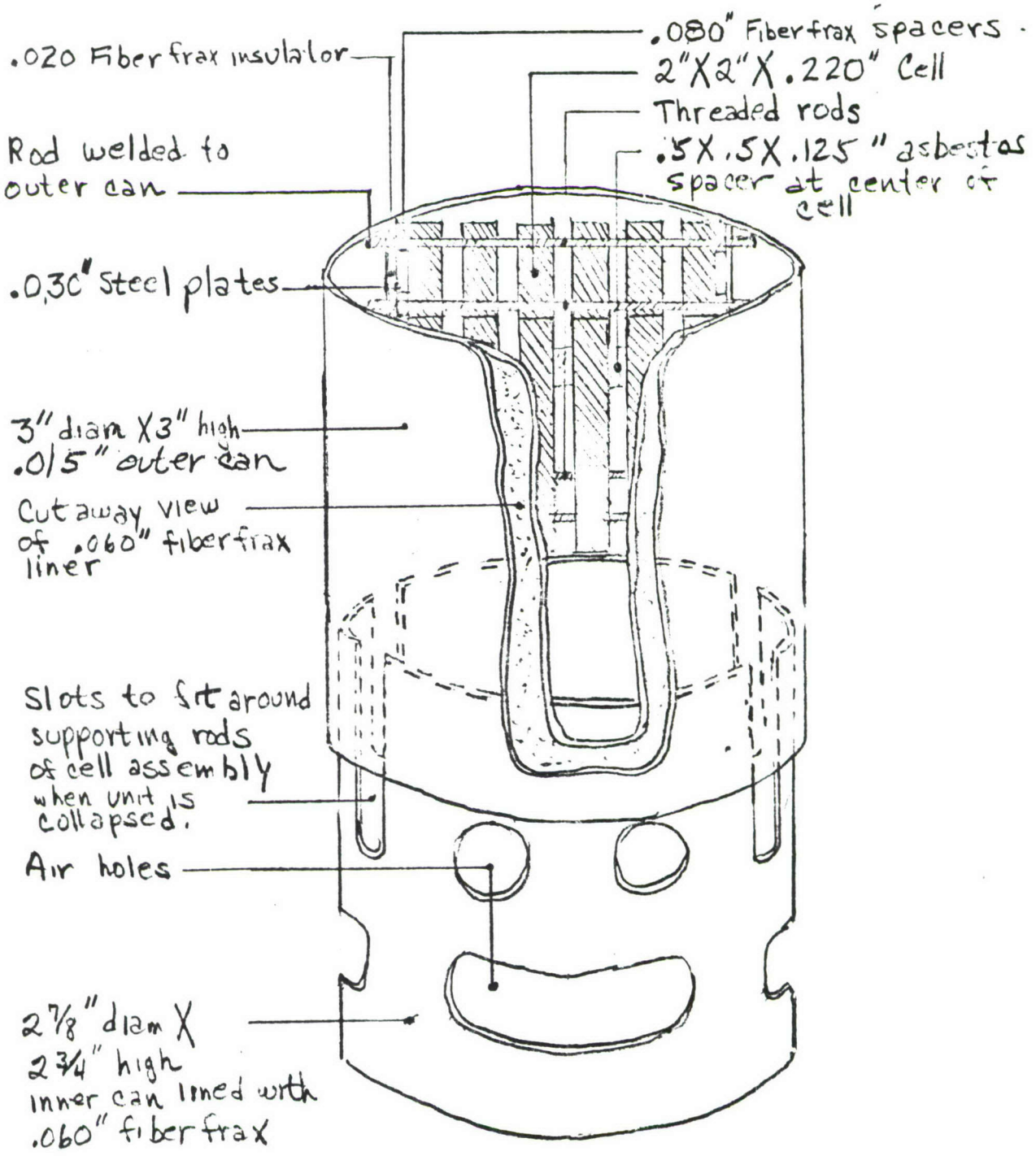

FIGURE 1. Sketch of six-cell battery with modified burner.

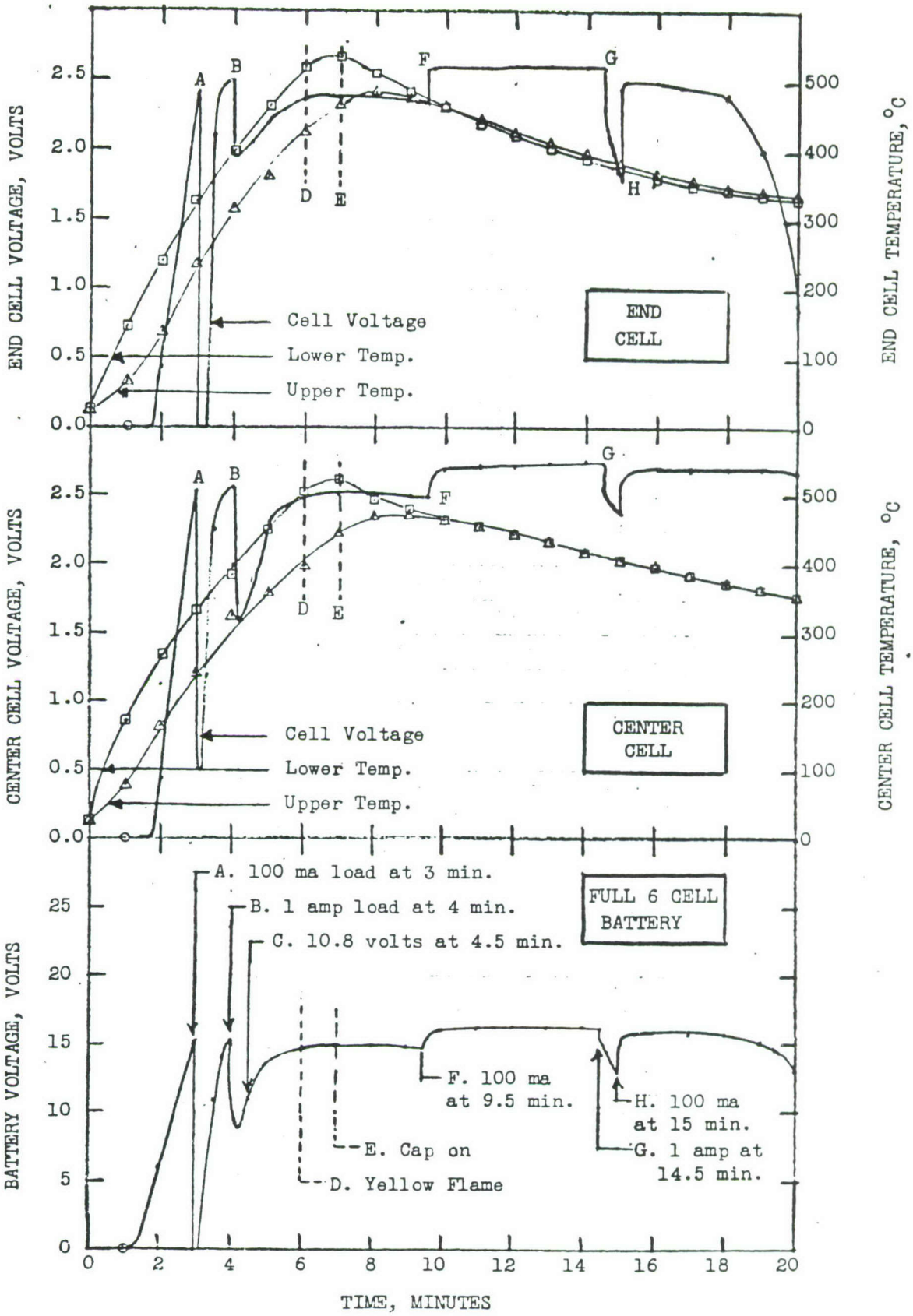

Fig. 2 First cycle performance of 6-cell battery using 1 and 2/3 bars trioxane fuel.

6.1

load also decrease as the number of cycles increases.

Thermal data for cycles 2, 3, and 4 are not given in Figure 3. These data are shown in Table 1 along with cycle 1 values.

The battery was able to supply the required one ampere for four 5-minute cycles at voltages above 11.5 volts. The total time the battery was loaded at one ampere was 25.75 minutes. Total time under the 100 ma load was at least 30 minutes. It was this design (Fig. 1) which was used as the basis for the development of the final design with more uniform heating and improved ruggedness.

Final Design

During the last report period, March 1 to June, 1974, the following was accomplished:

1. The mechanical design of the assembly was finalized and engineering drawings were completed.

2. Complete assemblies were tested under various environmental conditions and a fuel loading table was generated.

3. Twenty-five assemblies were completed for shipment.

Mechanical Design

Previous work had yielded a general configuration for the cell array and battery assembly. In order to make the assembly more rugged and capable of being handled repeatedly, it was necessary to make several design modifications. The major modifications were:

TECHNICAL LIBRARY
BLDG. 305
ABERDEEN PROVING GROUND, MD.

A. Change from .015" to .032" steel outer case.

B. Addition of a .032" steel reinforcing ring to the top of the outer case at the point of cell array attachment.

C. Change from .060" to .020" outer case "Fiberfrax" insulator lining.

D. Addition of a .005" nickel sleeve covering "Fiberfrax" liner in outer case to eliminate tearing of Fiberfrax when the inner and outer cases are collapsed.

E. Reconfiguration of air vent holes in fuel can to eliminate catching on edge of outer can when collapsed and to make case more rigid.

F. Installation of "Fiberfrax" insulating pads on array frame to help prevent shorting in the event of cell shifting.

G. Adjustment of inter-cell spacing for more uniform heating.

After several mock-up assemblies were built to determine usableness, changes A thru F were incorporated and assembly FD-1 was tested (FD indicates final

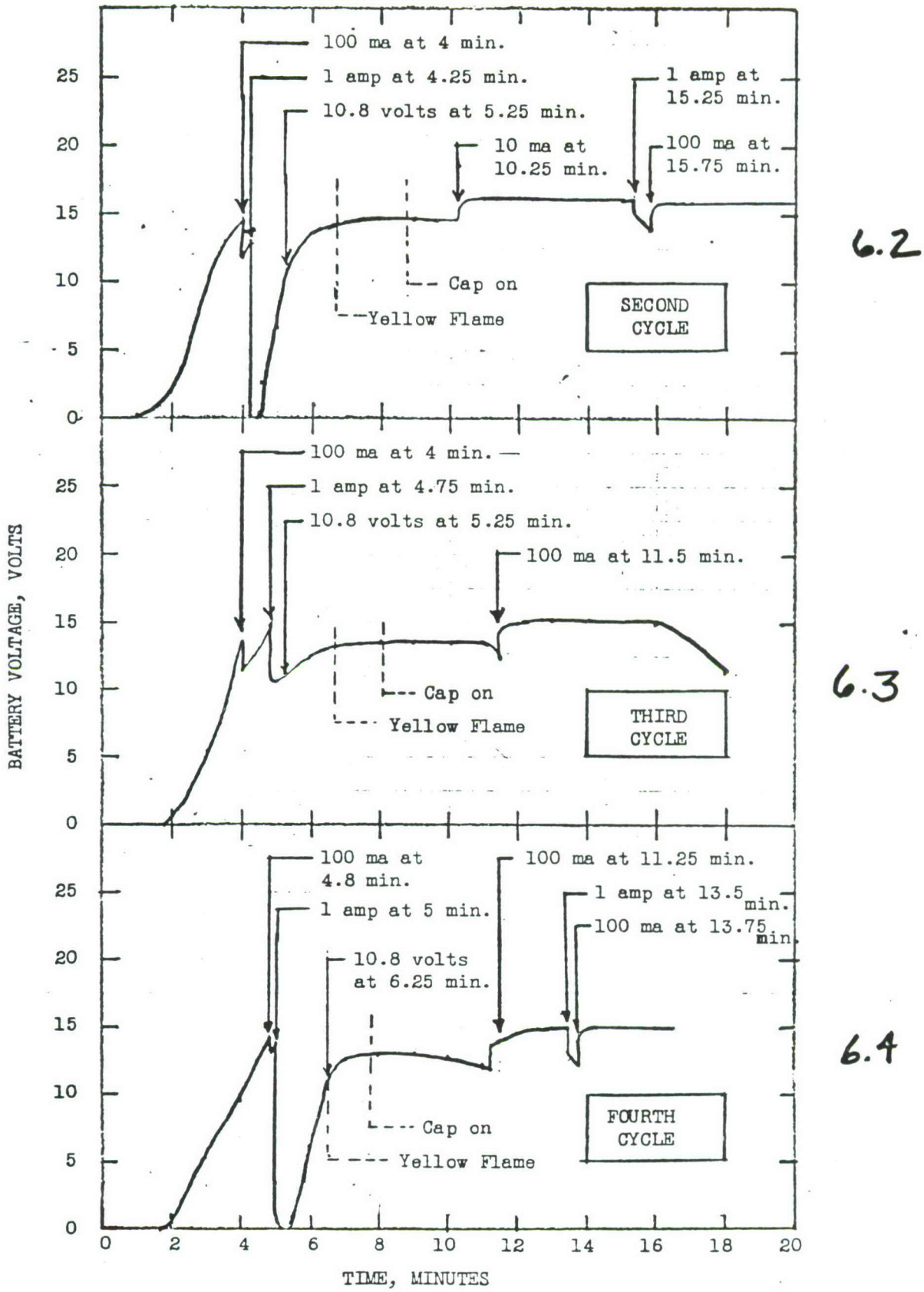

Fig. 3 Second, third and fourth cycle performance of 6-cell battery using 2 bars trioxane fuel.

TABLE 1

Temperature Profiles For Six-Cell Array

Cycle 1 - 1 2/3 bars trioxane					Cycle 3 - 2 bars trioxane				
Time (min)	Temp. (°C)				Time (min)	Temp. (°C)			
	End Cell		Center Cell			End Cell		Center Cell	
	Up	Low	Up	Low		Up	Low	Up	Low
1	65	144	80	173	1	56	135	86	148
2	139	239	166	269	2	120	242	144	248
3	235	328	246	338	3	221	329	232	317
4	318	398	328	385	4	308	405	302	378
5	362	464	361	449	5	350	472	351	439
6	424	519	400	505	6	428	529	408	497
7	467	533	449	512	7	496	590	462	558
8	484	511	472	494	8	511	574	491	550
9	478	486	475	479	9	517	543	505	528
10	465	464	466	467	10	503	512	504	508
11	447	443	457	455	11	485	487	495	493
12	429	424	445	444	12	466	464	483	478
13	412	406	433	432	13	443	444	466	464
14	396	390	421	420	14	429	425	451	449
15	382	376	410	408	15	411	407	436	434
16	368	363	398	397	16	395	391	423	421
17	354	350	387	385	17	380	376	409	408
18	346	344	376	375					
19	341	338	365	365					
20	335	331	356	355					
21	329	321	347	347					
22	315	310	340	341					
Cycle 2 - 2 bars trioxane					Cycle 4 - 2 bars trioxane				
1	63	120	95	162	1	58	133	74	163
2	119	194	166	254	2	97	240	135	264
3	198	275	250	332	3	224	329	234	339
4	277	349	324	396	4	308	393	306	395
5	340	420	391	451	5	352	452	358	443
6	392	490	425	511	6	421	523	426	513
7	452	558	469	570	7	474	582	463	582
8	513	603	511	605	8	518	577	509	577
9	534	578	537	588	9	521	550	522	546
10	531	550	549	570	10	511	520	520	524
11	521	527	543	554	11	494	495	509	507
12	504	503	535	539	12	476	473	493	491
13	485	481	523	525	13	456	452	478	475
14	468	462	510	511	14	437	433	462	459
15	450	444	495	495	15	420	415	445	444
16	434	428	481	482	16	403	398	431	429
					17	389	384	418	417

design). The results of this test and others are reported in Table 2. In this table are listed the start times along with battery voltages and cell temperatures. Start time is defined as time to reach minimum battery voltage under the transmit load (See point C in Fig. 2 as an example). Battery voltages are given at the ends of the 5-minute transmit and 5-minute receive modes (See points F and G in Fig. 2 as examples).

It was evident from the results of FD-1 (long start and low temperature peak in center cell) that the cell separation needed adjustment. Unit FD-2 was constructed using the final, cell-separation configuration (modification G above). The test results indicate the assembly is very well balanced thermally. Ten cycles were obtained from this unit, the first five being shown in Table 2. Engineering drawings were prepared reflecting the final design. Drawings 405782 and 405785 have been included in this report to show the configuration of the final assembly. For more detail, the complete drawing package should be consulted (Appendix A).

Environmental Tests

The following tests were performed to determine the ruggedness and operability of the final design. In all tests involving operation, the assemblies were stabilized at the stated temperature prior to the start of each cycle. Experimental data for the environmental testing are given in Table 3.

A. Drop Test - Drop tests in accordance with Contract No. DAAD05-73-C-0555, section F, para. 5 were performed on a final design mock-up model. Shifting of cells and subsequent shorting to array frame resulted. The frame of the array was insulated with "Fiberfrax". Subsequent drop tests on unit FD-1 indicate the assembly will survive a drop of 2 1/2 ft. without causing excessive cell shift or shorting.

B. Cold Condition - Assembly ET-1 (Engineering Test Sample Number 1) was placed in a temperature chamber and allowed to stabilize at -65°F for two hours. The assembly was operated while it was in the temperature chamber. The assembly was cycled five times. The voltage on the third cycle was low due to insufficient fuel loading, all other cycles performed satisfactorily.

C. Hot Condition - Assembly ET-2 was placed in a temperature chamber and stabilized at +110°F. The assembly was operated while it was in the chamber. Four cycles were completed satisfactorily.

D. Wind - Assembly ET-3 was placed in a tube with a chimney for hot gases (see Fig. 4). Air was forced through the tube by means of a variable speed fan. Velocity was measured with a flowmeter. Three cycles were completed. The first was underheated but the second and third were satisfactory. It was then noted that the chimney was providing favorable air current for the assembly. The fourth cycle was tested on the bench with air blowing directly on the assembly. Almost no operational life was achieved. The flame came out the vent holes in the burner can. The assembly was shielded from the air flow and a fifth cycle completed successfully.

TABLE 2

Engineering Tests of Final Design

S/N	Cycle	Conditions	Initial Temp.	Bars of Trioxane	Start Time (Sec.)	Volts at end of 5 min. transmit	Volts at end of 5 min. receive	Peak Cell Temp. (°C) End Cell	Peak Cell Temp. (°C) Center Cell
FD1	1	Static	25°C (77°F)	1 1/2	385	10.4	12.8	453	380
	2	"	"	2	400	12.7	14.2	546	489
	3	"	"	2 1/3	435	11.3	13.7	574	515
	4	"	"	2 1/2	480	11.0	13.3	546	481
FD2	1	Static	25°C (77°F)	1 1/2	335	12.6	15.7	479	414
	2	"	"	1 2/3	335	14.6	16.3	557	513
	3	"	"	2	376	14.1	16.6	584	556
	4	"	"	2	400	13.0	13.0	578	552
	5	"	"	2 1/2	430	14.1	15.4	595	577

TABLE 3

Environmental Tests

S/N	Cycle	Conditions	Initial Temp.	Bars of Trioxane	Start Time (Sec.)	Volts at end of 5 min. transmit	Volts at end of 5 min. receive	Peak Cell Temp. (°C) End Cell	Peak Cell Temp. (°C) Center Cell
				Low Temperature Tests					
ET1	1	Static	-54°C (-65°F)	1 2/3	300	14.6	16.2	554	505
	2	"	"	1 2/3	350	14.1	15.5	-	-
	3	"	"	1 2/3	400	*4.5	12.5	-	-
	4	"	"	2 1/3	450	13.8	15.0	-	-
	5	"	"	2 1/2	460	13.0	13.6	-	-
				High Temperature Tests					
ET2	1	"	-41°C (+105°F)	1 1/3	305	14.4	16.0	545	491
	2	"	"	1 1/2	315	13.2	13.8	538	494
	3	"	"	2	385	14.2	14.3	620	569
	4	"	"	2	350	14.1	15.8	622	585
				Wind Test					
ET3	1	Wind 880 ft/min.	25°C (77°F)	1 1/3	210	*1.75	*2.50	487	515
	2	"	"	1 2/3	150	14.1	*4.25	538	594
	3	"	"	2	210	*4.4	*3.75	484	507
	4	"	"	2	**	0.0	*0.50	373	411
	5	"	"	2	310	*4.75	*4.50	536	545

TABLE 3 (cont.)

Environmental Tests

S/N	Cycle	Conditions	Initial Temp.	Bars of Trioxane	Start Time (Sec.)	Volts at end of 5 min. transmit	Volts at end of 5 min. receive	Peak Cell Temp. (°C) End Cell	Peak Cell Temp. (°C) Center Cell
					Field Test				
ET4	1	S.West Wind	25°C (77°F)	1 1/2	330	13.4	14.6	-	-
	2	"	"	1 2/3	360	*4.0	*4.0	-	-
	3	"	"	2	420	*4.0	*3.4	-	-
	4	"	"	2 1/2	420	*1.5	*2.0	-	-
	5	"	"	2 1/2	480	*2.5	*4.0	-	-
					Vibration Test				
ET5	1	Pre-Vibration	25°C (77°F)	1 1/3	320	14.3	15.6	-	-
	2	"	"	1 2/3	365	11.5	12.3	-	-
	3	"	"	2	430	11.4	12.0	-	-
	4	"	"	2 1/3	450	*4.5	11.8	-	-

* Represents minutes of running time, end voltage was less than 11.25.

** Did not reach minimum voltage.

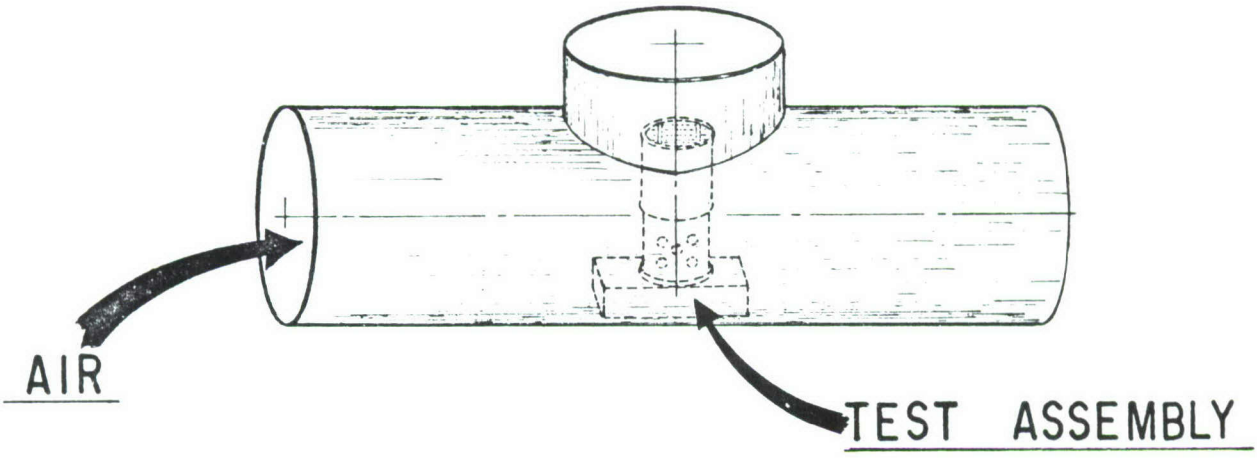

FIG 4

WIND TEST SETUP

E. Field Test - Assembly ET-4 was tested outdoors with wind conditions of 5 - 15 mph. The assembly was shielded on three sides. Four cycles were completed. Life was marginal.

F. Vibration - Assembly ET-5 was vibrated one hour on each of three perpendicular axis. The frequency was swept from 10 to 55 Hz and back to 10 Hz, once every minute of testing. The assembly was subsequently tested for four cycles of electrical operation.

The results of the environmental tests show the unit is capable of being operated over the temperature range of -65°F to +110°F. The assembly will survive transportation vibration and repeated drops of 2 1/2 ft. or less onto a 2" fir plank. The assembly, however, must be completely shielded from air currents. This may be due in part to the fact that the trioxane fuel must be shielded from wind.

A table of correct fuel loading, Table I, Appendix B, was evolved using the results of the development and environmental tests.

Phase III

Following the completion of the design and environmental tests, twenty-five production units were assembled incorporating all modifications. Minor cosmetic modifications were made at this point, modifications such as addition of locator marks to aid in opening and closing the array.

A set of operating instructions was prepared and is included as Appendix B.

CONCLUSIONS

The feasibility of a multishot thermal battery has been demonstrated. Although the unit does not meet all the specifications of the original program, the major design objectives have been accomplished.

The following is a list of the more important accomplishments of the project:

1. Electrical requirements have been met without exceeding the desired size and weight limitations. (3" diam x 3" high; 1 1/2 lb.)

2. A highly reliable cell design has been generated. More than one hundred and fifty cells have been tested without failure.

3. A battery package has been developed which demonstrates the practicality of the multishot concept.

4. The battery is capable of operating over the full military temperature range ($-65^{o}F$ to $+165^{o}F$), and will withstand moderate vibration and shock.

5. The fuel of choice (trioxane) is a standard military item.

6. No special skills are required to operate the battery.

7. No problems were encountered in interfacing the battery with the AN/PRC-77 radio.

RECOMMENDATIONS

Some of the areas which might be considered to improve the present design are:

1. Improved ruggedness.

2. Less sensitivity to wind.

3. Ability to operate continuously for periods greater than ten minutes.

APPENDIX A

DRAWINGS

MATERIAL	.030±.002 THICK STEEL CORROSION RESISTING SHEET, CLASS 304, COND.A FINISH 2B PER QQ-S-766	FINISH	

USED ON

403781

REVISIONS

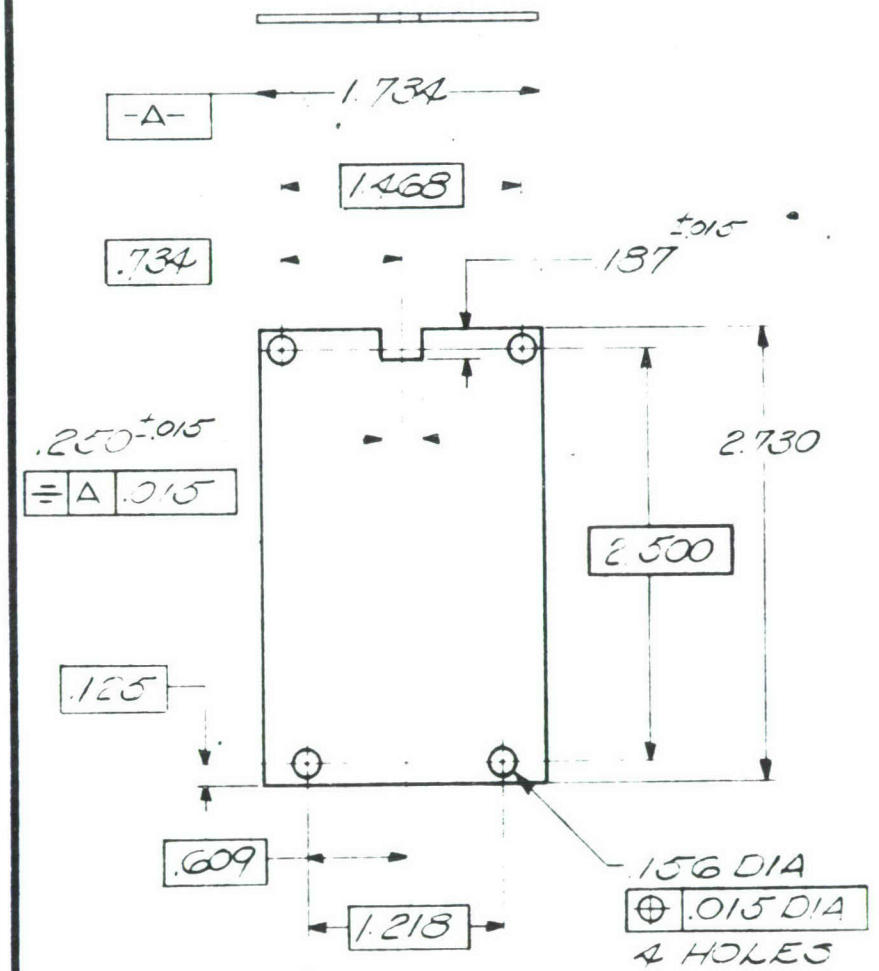

030041028

CATALYST RESEARCH CORPORATION BALTIMORE, MARYLAND 21209 U.S.A.	DIMENSIONS IN INCHES (UNLESS OTHERWISE SPECIFIED) TOLERANCES (UNLESS OTHERWISE SPECIFIED) DECIMALS ± .005 FRACTIONS ± 1/64 ANGLES ± 1/2°	SCALE 1/1	DR. JJF 5-22-72	DWG. SIZE	PRESSURE PLATE
INTERPRET DIMENSIONS AND SYMBOLS IN ACCORDANCE WITH USASI-Y 14.5		DO NOT SCALE DRAWING	CH'K'D APP'D APP'D APP'D	D	PART NO. 405773

MATERIAL		FINISH	

USED ON: 405781

PART NO.	DESCRIPTION	REQ'D.
405756	CELL ASS'Y.	1
25919	LEAD	1 1/16 IN

REVISIONS

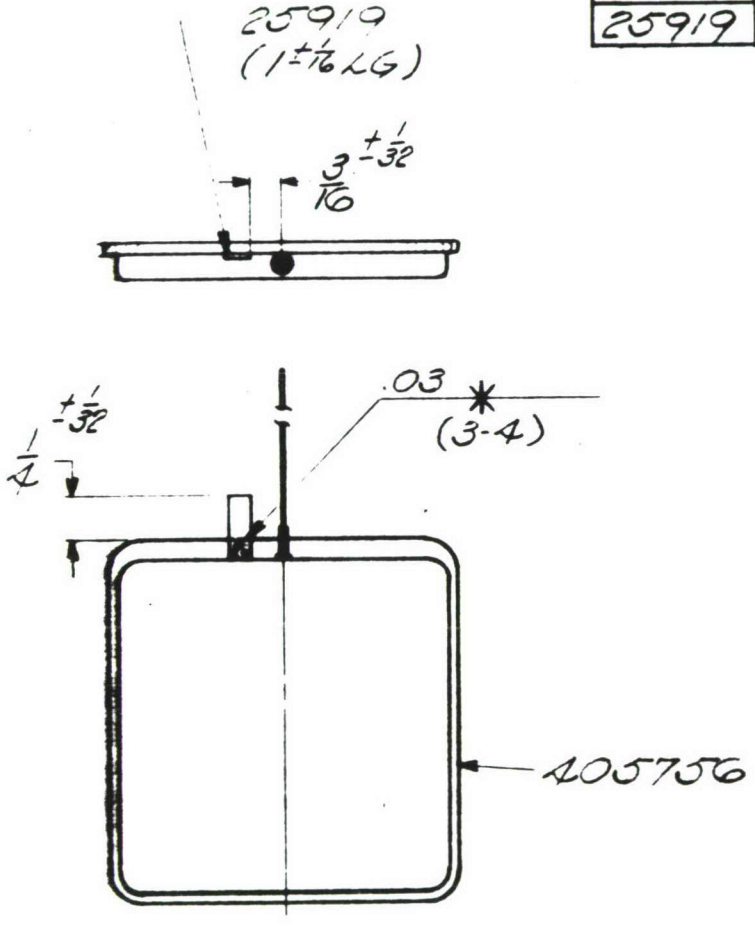

030041027

CATALYST RESEARCH CORPORATION BALTIMORE, MARYLAND 21208 U.S.A.	DIMENSIONS IN INCHES (UNLESS OTHERWISE SPECIFIED) TOLERANCES (UNLESS OTHERWISE SPECIFIED) DECIMALS ± .005 FRACTIONS ± 1/64 ANGLES ± 1/2°	SCALE 1/1	DR. JJF 5-22-74	DWG. SIZE D	CELL ASS'Y. W/LEAD
INTERPRET DIMENSIONS AND SYMBOLS IN ACCORDANCE WITH USASI-Y 14.5		DO NOT SCALE DRAWING	CH'K'D APP'D APP'D APP'D		PART NO. 405772

MATERIAL		FINISH		TOOL NO T-9161	USED ON 405232

.010 ±.002 THICK
CALCIUM COAT
(ONE SIDE)

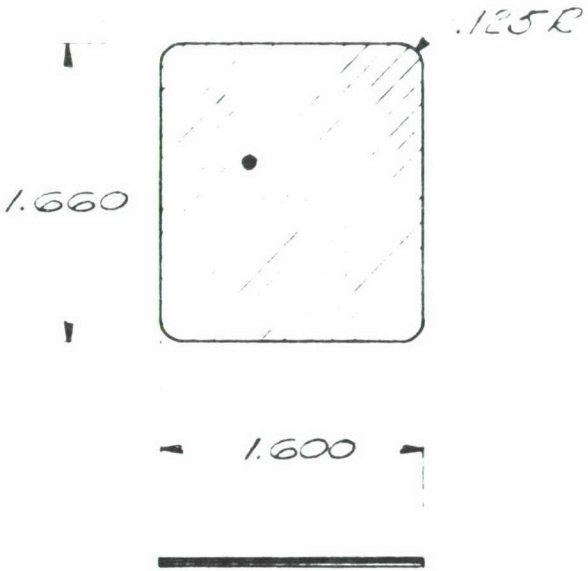

NOTE:

UNLESS OTHERWISE SPECIFIED:
SURFACE ROUGHNESS AS ROLLED OR DRAWN.
PUNCHES, CUT, FORMED OR SHEARED SURFACES TO HAVE 125√

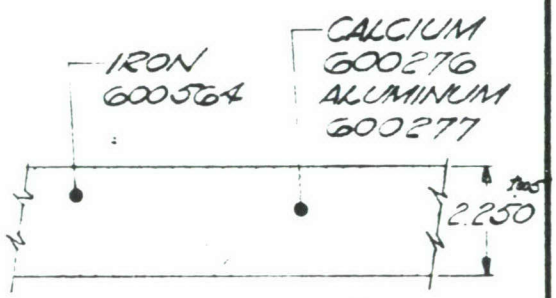

STOCK MAT'L.
NOT TO SCALE

NOTE:
1. INSPECT PER QCP-8-1

REVISIONS

030041005

CATALYST RESEARCH CORPORATION BALTIMORE, MARYLAND 21209 U.S.A.	DIMENSIONS IN INCHES (UNLESS OTHERWISE SPECIFIED) TOLERANCES (UNLESS OTHERWISE SPECIFIED)	SCALE 1/1	DR. JSF 10-5-73	DWG. SIZE	ELECTRODE
INTERPRET DIMENSIONS AND SYMBOLS IN ACCORDANCE WITH USASI-Y 14.5	DECIMALS ± .005 FRACTIONS ± 1/64 ANGLES ± 1/2°	DO NOT SCALE DRAWING	CH'K'D APP'D APP'D APP'D	D	PART NO. 405651

MATERIAL	.040 THICK FIBERFRAX SHEET PER MS 29312	FINISH		USED ON
				405736

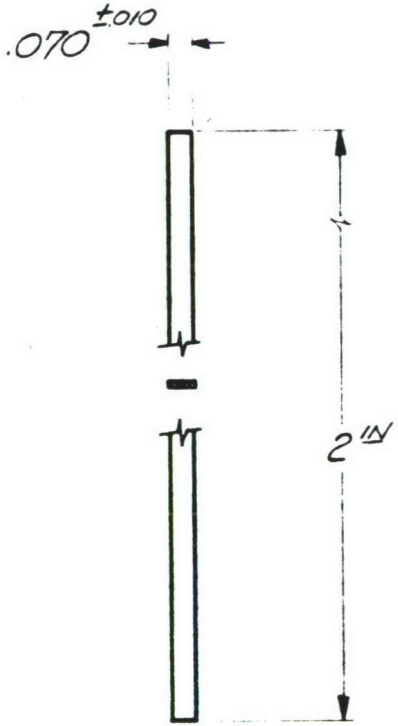

REVISIONS

030041007

CATALYST RESEARCH CORPORATION BALTIMORE, MARYLAND 21209 U.S.A.	DIMENSIONS IN INCHES (UNLESS OTHERWISE SPECIFIED) TOLERANCES (UNLESS OTHERWISE SPECIFIED)	SCALE 2/1	DR.	JJF 5-3-74	DWG. SIZE	INSULATOR RECTANGLE
INTERPRET DIMENSIONS AND SYMBOLS IN ACCORDANCE WITH USASI-Y 14.5	DECIMALS ± .005 FRACTIONS ± 1/64 ANGLES ± 1/2°	DO NOT SCALE DRAWING	CH'K'D APP'D APP'D APP'D		D	PART NO. 405729

MATERIAL	.005 IRON METAL, EXPANDED 189 MESH PER	FINISH			USED ON
					405647

REVISIONS

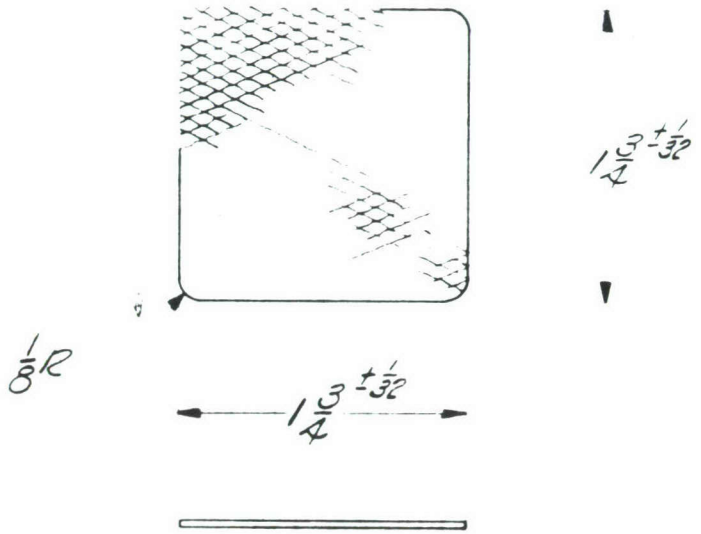

030041008

CATALYST RESEARCH CORPORATION BALTIMORE, MARYLAND 21209 U.S.A.	DIMENSIONS IN INCHES (UNLESS OTHERWISE SPECIFIED) TOLERANCES (UNLESS OTHERWISE SPECIFIED)	SCALE	DR.	JJF 5-3-74	DWG. SIZE	SCREEN
INTERPRET DIMENSIONS AND SYMBOLS IN ACCORDANCE WITH USASI-Y 14.5	DECIMALS ± .005 FRACTIONS ± 1/64 ANGLES ± 1/2°	DO NOT SCALE DRAWING	CH'K'D APP'D APP'D APP'D		D	PART NO. 405751

MATERIAL		FINISH		TOOL NO T-9142	USED ON
					405736

PART NO.	DESCRIPTION	REQ'D.
405751	SCREEN	1
409535	IL HOMOGENEOUS PELLET MIX	AR

REVISIONS

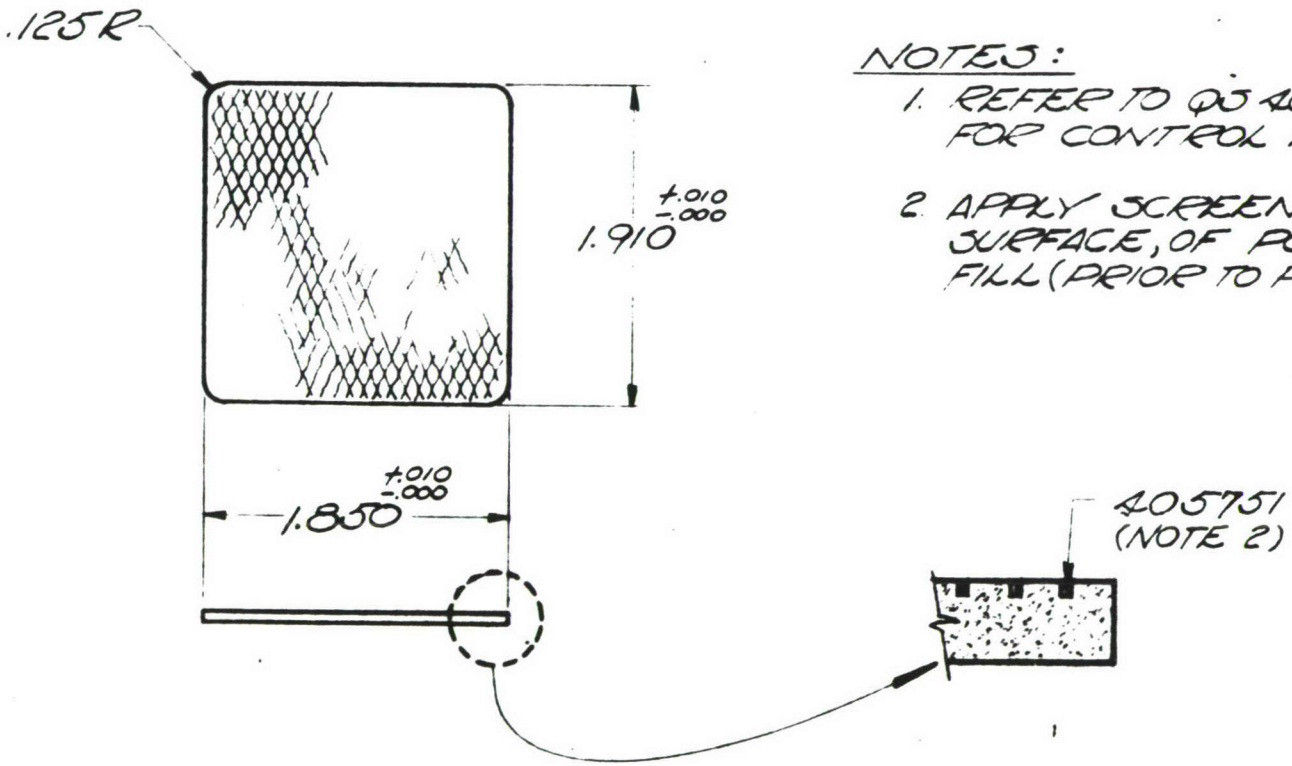

NOTES:

1. REFER TO QS 405647 FOR CONTROL LIMITS
2. APPLY SCREEN AT TOP SURFACE, OF POWDER FILL (PRIOR TO PRESSING.)

030041002

CATALYST RESEARCH CORPORATION BALTIMORE, MARYLAND 21209 U.S.A.	DIMENSIONS IN INCHES (UNLESS OTHERWISE SPECIFIED) TOLERANCES (UNLESS OTHERWISE SPECIFIED)	SCALE 1/1	DR. JGF 5-2-74	DWG. SIZE	PELLET ELECTROLYTE & DEPOL.
INTERPRET DIMENSIONS AND SYMBOLS IN ACCORDANCE WITH USASI-Y 14.5	DECIMALS ± .005 FRACTIONS ± 1/64 ANGLES ± 1/2°	DO NOT SCALE DRAWING	CH'K'D / APP'D / APP'D / APP'D	D	PART NO. 405647

MATERIAL	040 THICK FIBERFRAX SHEET PER MS 29314	FINISH		USED ON
				405756

REVISIONS

1 ECO 4534 2-5-74 JSF MATL WAS 032 AS B., 1.910 WAS 1.850

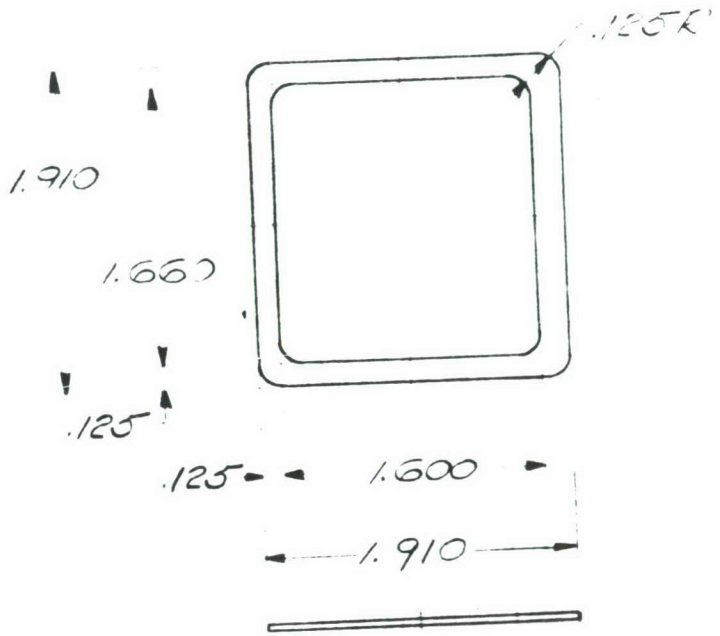

030041006

CATALYST RESEARCH CORPORATION BALTIMORE, MARYLAND 21209 U.S.A. INTERPRET DIMENSIONS AND SYMBOLS IN ACCORDANCE WITH USASI-Y 14.5	DIMENSIONS IN INCHES (UNLESS OTHERWISE SPECIFIED) TOLERANCES (UNLESS OTHERWISE SPECIFIED) DECIMALS ± .015 FRACTIONS ± 1/64 ANGLES ± 1/2°	SCALE 1/1 DO NOT SCALE DRAWING	DR. JSF 10-8-73 CH'K'D APP'D APP'D APP'D	DWG. SIZE D	INSULATOR PART NO. 405653

MATERIAL	.032 ±.003 THICK STEEL CARBON SHEET CRCQ PER QQ-S-698	FINISH		USED ON
				403769

REVISIONS

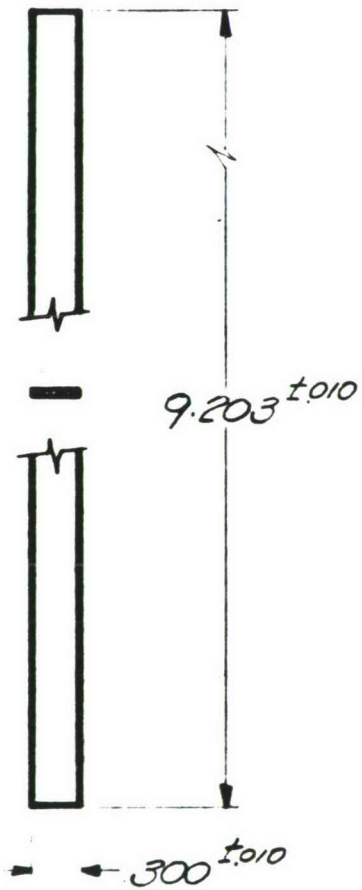

030041022

CATALYST RESEARCH CORPORATION BALTIMORE, MARYLAND 21209 U.S.A.	DIMENSIONS IN INCHES (UNLESS OTHERWISE SPECIFIED) TOLERANCES (UNLESS OTHERWISE SPECIFIED)	SCALE 1/1	DR. WJF 5-15-72	DWG. SIZE	RIM CASE
INTERPRET DIMENSIONS AND SYMBOLS IN ACCORDANCE WITH USASI-Y 14.5	DECIMALS ± .005 FRACTIONS ± 1/64 ANGLES ± 1/2°	DO NOT SCALE DRAWING	CH'K'D APP'D APP'D APP'D	D	PART NO. 405766

MATERIAL	.020 THICK FIBERFRAX SHEET PER 600331	FINISH		USED ON
				405769

REVISIONS

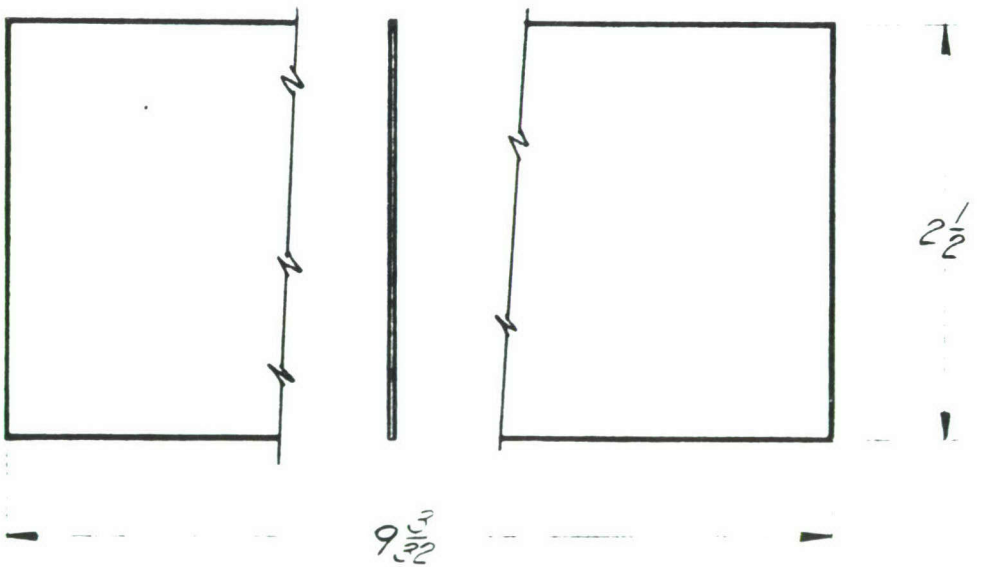

030041023

CATALYST RESEARCH CORPORATION BALTIMORE, MARYLAND 21209 U.S.A.	DIMENSIONS IN INCHES (UNLESS OTHERWISE SPECIFIED) TOLERANCES (UNLESS OTHERWISE SPECIFIED) DECIMALS ± .005 FRACTIONS ± 1/64 ANGLES ± 1/2°	SCALE 1/1	DR.	JSF 5-20-74	DWG. SIZE	INSULATOR RECTANGE
INTERPRET DIMENSIONS AND SYMBOLS IN ACCORDANCE WITH USASI-Y 14.5		DO NOT SCALE DRAWING	CH'K'D APP'D APP'D APP'D		D	PART NO. 405767

MATERIAL	.005 x 3 1/16 WIDE NICKEL STRIP PER MS 28002	FINISH		TOOL NO. F-9161	USED ON
					405734
					405735

NOTE:

1. UNLESS OTHERWISE SPECIFIED: SURFACE ROUGHNESS AS ROLLED OR DRAWN. PUNCHED, CUT, FORMED OR SHEARED SURFACES TO HAVE 125 √

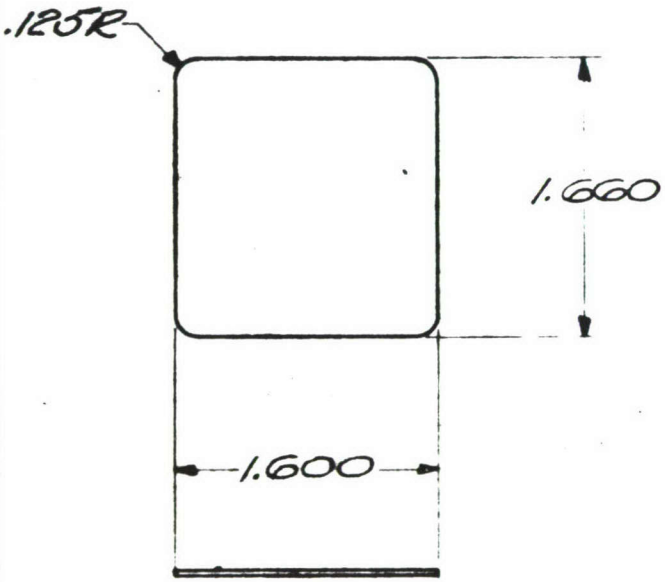

REVISIONS

030041010

CATALYST RESEARCH CORPORATION BALTIMORE, MARYLAND 21209 U.S.A. INTERPRET DIMENSIONS AND SYMBOLS IN ACCORDANCE WITH USASI-Y 14.5	DIMENSIONS IN INCHES (UNLESS OTHERWISE SPECIFIED) TOLERANCES (UNLESS OTHERWISE SPECIFIED) DECIMALS ± .005 FRACTIONS ± 1/64 ANGLES ± 1/2°	SCALE 1/1 DO NOT SCALE DRAWING	DR. NJF 5-3-74 CH'K'D APP'D APP'D APP'D	DWG. SIZE D	COMPRESSION PLATE PART NO. 405753

MATERIAL		FINISH		USED ON
				405756

PART NO.	DESCRIPTION	REQ'D.
405648	CELL CUP	1
405753	COMPRESSION PLATE	1
22573	FLUX	AR
26570	SOLDER SILVER	AR
627088	SEAL TERMINAL	1

REVISIONS

NOTE:
1. BRAZE IN ACCORDANCE WITH MIL-B-7883

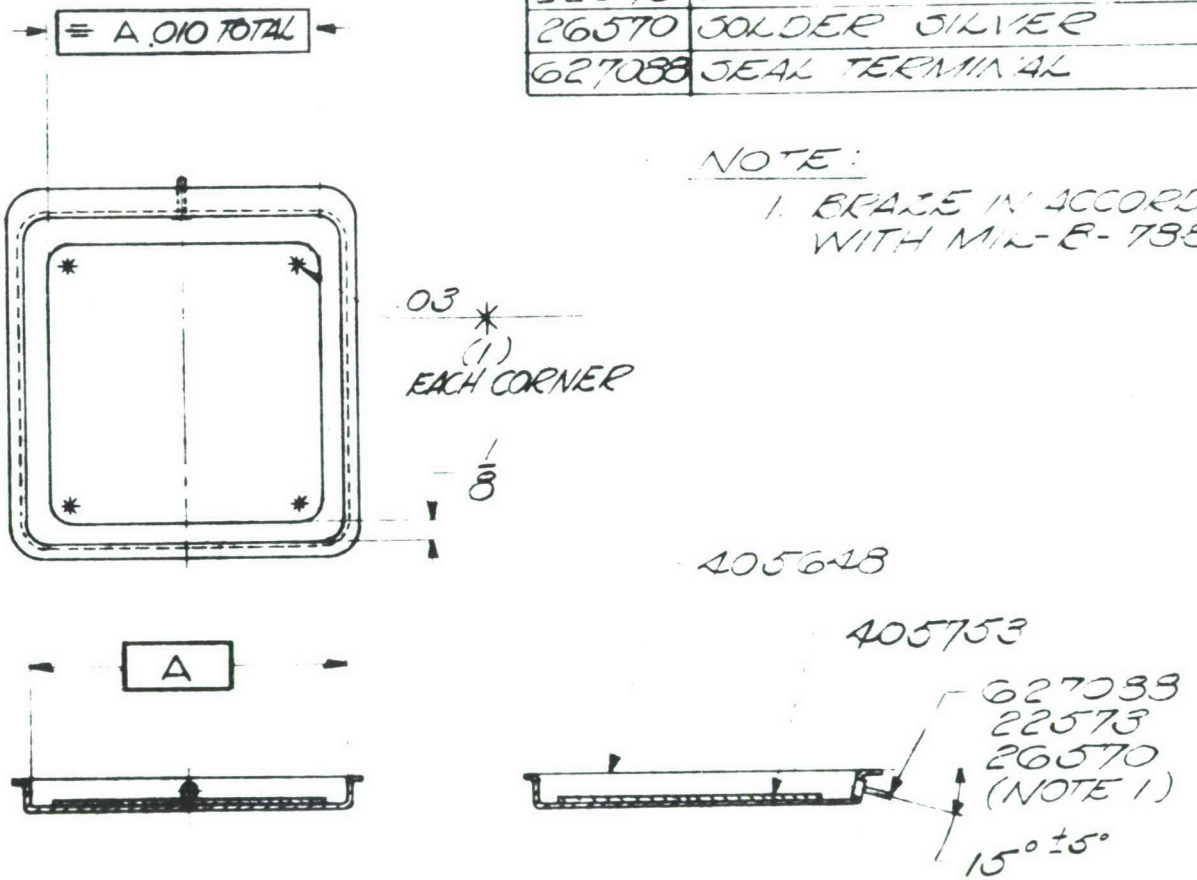

030041011

CATALYST RESEARCH CORPORATION BALTIMORE, MARYLAND 21209 U.S.A.	DIMENSIONS IN INCHES (UNLESS OTHERWISE SPECIFIED) TOLERANCES (UNLESS OTHERWISE SPECIFIED) DECIMALS ± .005 FRACTIONS ± 1/64 ANGLES ± 1/2°	SCALE 1/1	DR. JJF 5-6-74 CH'K'D APP'D APP'D APP'D	DWG. SIZE D	CASE ASS'Y.
INTERPRET DIMENSIONS AND SYMBOLS IN ACCORDANCE WITH USASI-Y 14.5		DO NOT SCALE DRAWING			PART NO. 405754

MATERIAL		FINISH	

USED ON
405756

PART NO.	DESCRIPTION	REQ'D.
405649	COVER CELL	1
405753	COMPRESSION PLATE	1

REVISIONS

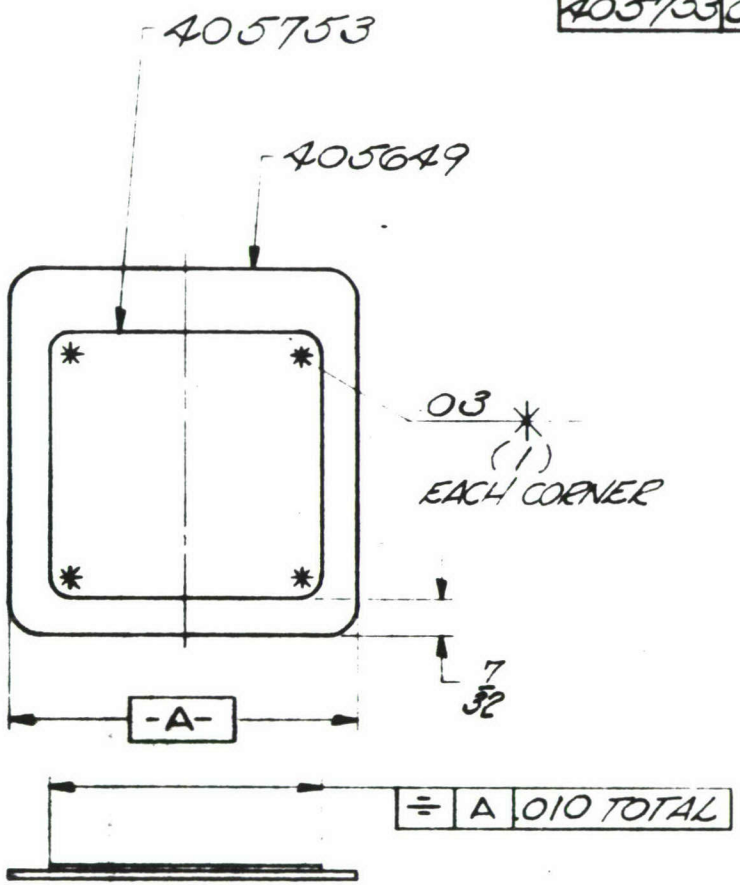

030041012

CATALYST RESEARCH CORPORATION BALTIMORE, MARYLAND 21209 U.S.A.	DIMENSIONS IN INCHES (UNLESS OTHERWISE SPECIFIED) TOLERANCES (UNLESS OTHERWISE SPECIFIED)	SCALE 1/1	DR. JJF 5-6-74	DWG. SIZE	COVER ASS'Y.
INTERPRET DIMENSIONS AND SYMBOLS IN ACCORDANCE WITH USASI-Y 14.5	DECIMALS ± .005 FRACTIONS ± 1/64 ANGLES ± 1/2°	DO NOT SCALE DRAWING	CH'K'D APP'D APP'D APP'D	D	PART NO. 405755

MATERIAL	.010 ± .002 THICK STEEL CORROSION RESISTING SHEET, CLASS 304, COND. A, FINISH 2B PER QQ-S-766	FINISH		USED ON
				405783

REVISIONS

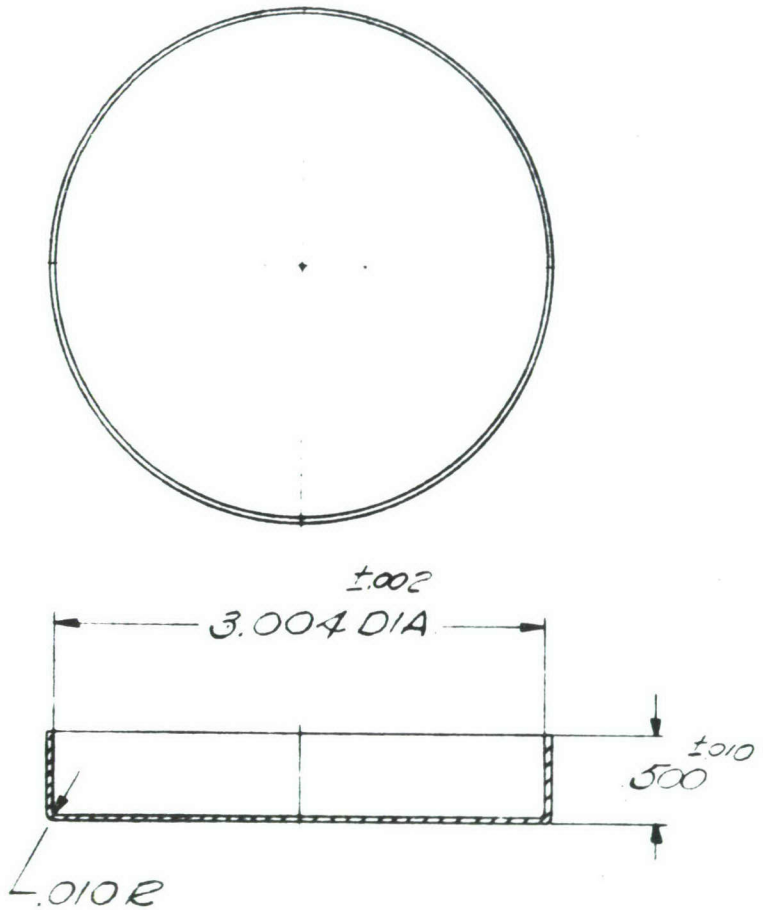

030041037

CATALYST RESEARCH CORPORATION BALTIMORE, MARYLAND 21209 U.S.A.	DIMENSIONS IN INCHES (UNLESS OTHERWISE SPECIFIED) TOLERANCES (UNLESS OTHERWISE SPECIFIED)	SCALE 1/1	DR. JJF 5-30-74	DWG. SIZE	CAP
INTERPRET DIMENSIONS AND SYMBOLS IN ACCORDANCE WITH USASI-Y 14.5	DECIMALS ± .005 FRACTIONS ± 1/64 ANGLES ± 1/2°	DO NOT SCALE DRAWING	CH'K'D APP'D APP'D APP'D	D	PART NO. 405783

MATERIAL	.095 THICK MIN-K SHEET PER	FINISH		USED ON
				403781

REVISIONS

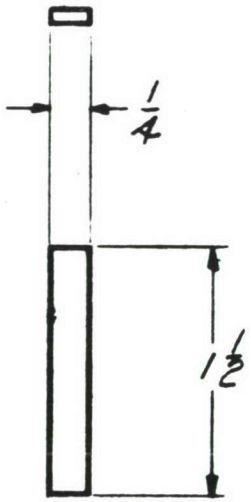

030041034

CATALYST RESEARCH CORPORATION BALTIMORE, MARYLAND 21209 U.S.A.	DIMENSIONS IN INCHES (UNLESS OTHERWISE SPECIFIED) TOLERANCES (UNLESS OTHERWISE SPECIFIED)	SCALE III	DR.	JJF 5-22-74	DWG. SIZE	INSULATOR RECTANGLE
INTERPRET DIMENSIONS AND SYMBOLS IN ACCORDANCE WITH USASI-Y 14.5	DECIMALS ± .005 FRACTIONS ± 1/64 ANGLES ± 1/2°	DO NOT SCALE DRAWING	CH'K'D APP'D APP'D APP'D		D	PART NO. 405779

MATERIAL	.080 THICK FIBERFRAX SHEET PER 600177	FINISH		USED ON
				405781

REVISIONS

030041033

CATALYST RESEARCH CORPORATION BALTIMORE, MARYLAND 21209 U.S.A.	DIMENSIONS IN INCHES (UNLESS OTHERWISE SPECIFIED) TOLERANCES (UNLESS OTHERWISE SPECIFIED)	SCALE 1/1	DR.	JJF 5-22-74	DWG. SIZE	INSULATOR RECTANGLE
INTERPRET DIMENSIONS AND SYMBOLS IN ACCORDANCE WITH USASI-Y 14.5	DECIMALS ± .005 FRACTIONS ± 1/64 ANGLES ± 1/2°	DO NOT SCALE DRAWING	CH'K'D APP'D APP'D APP'D		D	PART NO. 405778

MATERIAL	.030±.004 THICK STEEL CORROSION RESISTING SHEET, CLASS 304, CONDITION A, FINISH 2B PER QQ-S-766	FINISH		USED ON
				405755

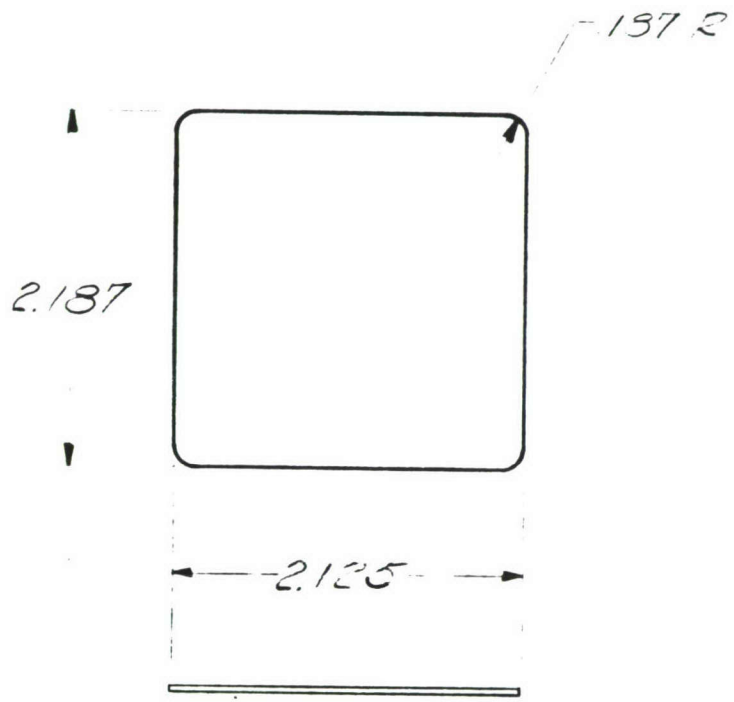

NOTE:

1. UNLESS OTHERWISE SPECIFIED: SURFACE ROUGHNESS AS ROLLED OR DRAWN. PUNCHED, CUT, FORMED OR SHEARED SURFACES TO HAVE 125√

REVISIONS

030041004

CATALYST RESEARCH CORPORATION BALTIMORE, MARYLAND 21209 U.S.A.	DIMENSIONS IN INCHES (UNLESS OTHERWISE SPECIFIED) TOLERANCES (UNLESS OTHERWISE SPECIFIED)	SCALE 1/1	DR.	JSF 10-5-73	DWG. SIZE	COVER CELL
INTERPRET DIMENSIONS AND SYMBOLS IN ACCORDANCE WITH USASI-Y 14.5	DECIMALS ± .005 FRACTIONS ± 1/64 ANGLES ± 1/2°	DO NOT SCALE DRAWING	CH'K'D APP'D APP'D APP'D		D	PART NO. 405649

MATERIAL	.030±.004 THICK STEEL CORROSION RESISTING SHEET, CLASS 304, COND. A, FINISH 2B PER QQ-S-766	FINISH			USED ON
					233734

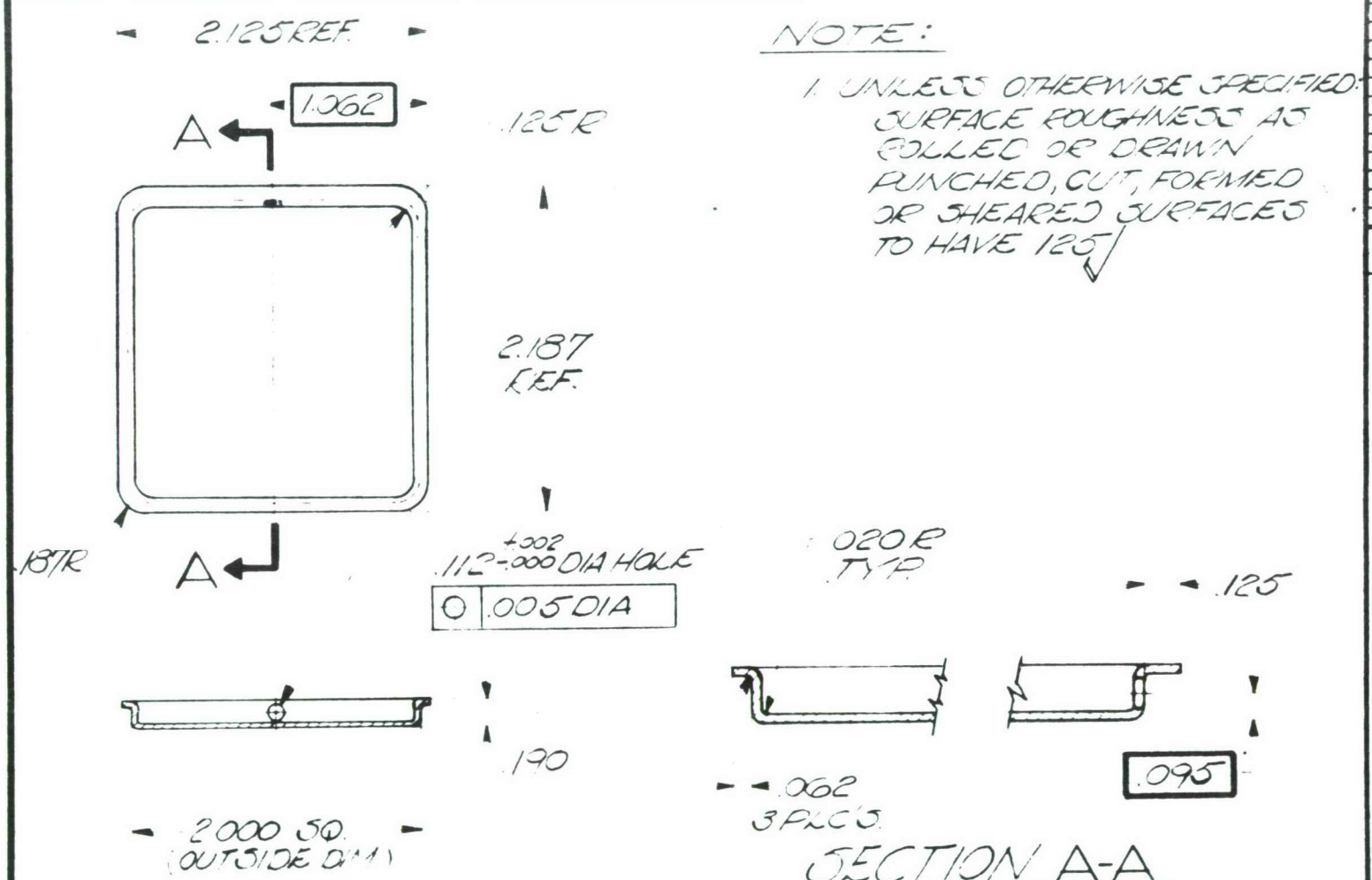

NOTE:

1. UNLESS OTHERWISE SPECIFIED: SURFACE ROUGHNESS AS ROLLED OR DRAWN PUNCHED, CUT, FORMED OR SHEARED SURFACES TO HAVE 125√

REVISIONS

030041003

CATALYST RESEARCH CORPORATION BALTIMORE, MARYLAND 21209 U.S.A.	DIMENSIONS IN INCHES (UNLESS OTHERWISE SPECIFIED) TOLERANCES (UNLESS OTHERWISE SPECIFIED) DECIMALS ± .005 FRACTIONS ± 1/64 ANGLES ± 1/2°	SCALE 1/1 & 2/1	DR.	CJF 5-3-74	DWG. SIZE	CELL CUP
INTERPRET DIMENSIONS AND SYMBOLS IN ACCORDANCE WITH USASI-Y 14.5		DO NOT SCALE DRAWING	CH'K'D		D	PART NO. 405648
			APP'D			
			APP'D			
			APP'D			

MATERIAL	.010±.002 THICK STEEL CORROSION RESISTING SHEET CLASS 304, COND. A FINISH 2B PER QQ-S-766	FINISH	

USED ON

405762

REVISIONS

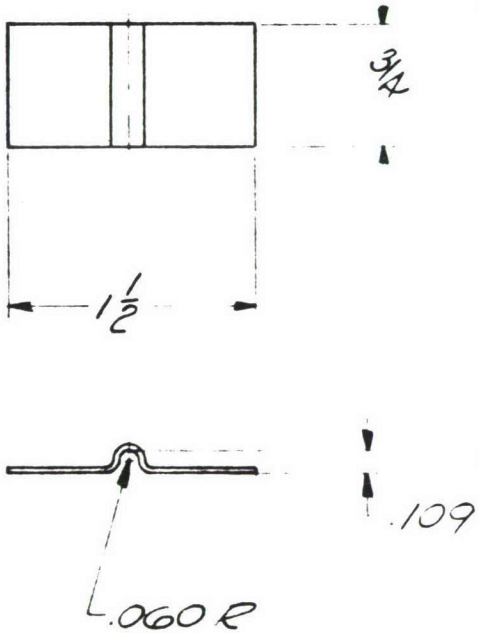

030041018

CATALYST RESEARCH CORPORATION BALTIMORE, MARYLAND 21209 U.S.A. INTERPRET DIMENSIONS AND SYMBOLS IN ACCORDANCE WITH USASI-Y 14.5	DIMENSIONS IN INCHES (UNLESS OTHERWISE SPECIFIED) TOLERANCES (UNLESS OTHERWISE SPECIFIED) DECIMALS ± .005 FRACTIONS ± 1/64 ANGLES ± 1/2°	SCALE 1/1 DO NOT SCALE DRAWING	DR. JJF 5-20-74 CH'K'D APP'D APP'D APP'D	DWG. SIZE D	HINGE PART NO. 405762

MATERIAL	.032 ±.003 THICK STEEL CARBON SHEET CRDQSK PER QQ-S-698	FINISH		USED ON
				405769

NOTES
1. COLD DRAWN (STEEL SHEET) CASE

REVISIONS

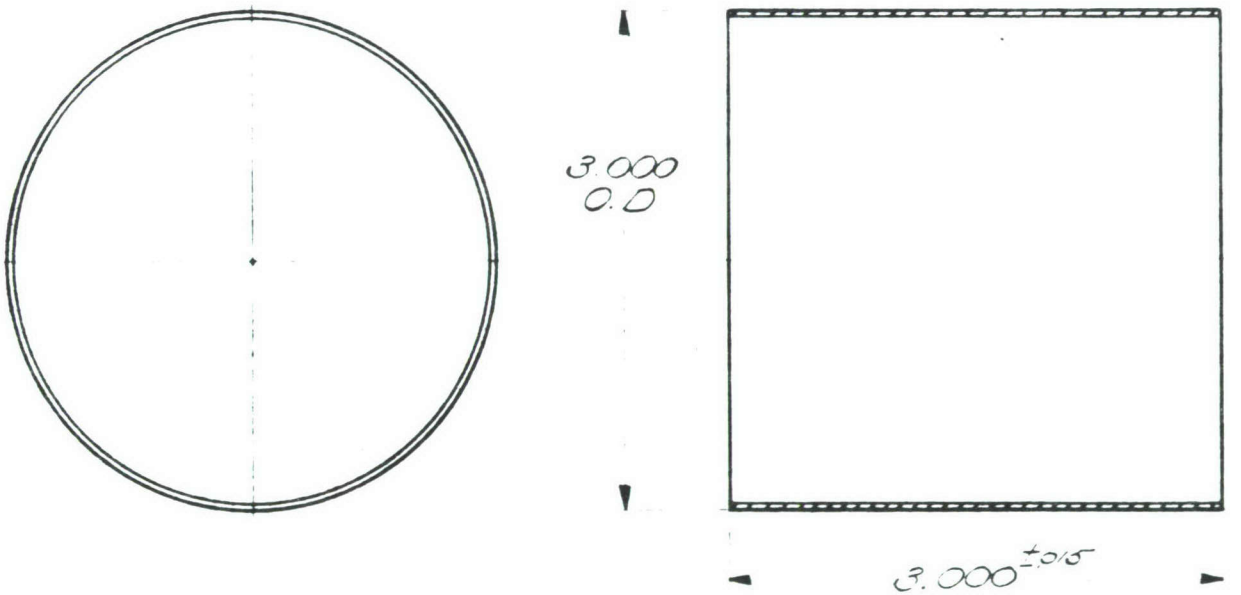

030041021

CATALYST RESEARCH CORPORATION BALTIMORE, MARYLAND 21209 U.S.A. INTERPRET DIMENSIONS AND SYMBOLS IN ACCORDANCE WITH USASI-Y 14.5	DIMENSIONS IN INCHES (UNLESS OTHERWISE SPECIFIED) TOLERANCES (UNLESS OTHERWISE SPECIFIED) DECIMALS ± .005 FRACTIONS ± 1/64 ANGLES ± 1/2°	SCALE 1/1 DO NOT SCALE DRAWING	DR. JSF 5-17-72 CH'K'D APP'D APP'D APP'D	DWG. SIZE D	CASE BATTERY PART NO. 405765

MATERIAL	12GA(.105) WIRE, STEEL, CARBON, 1010, BARE, PER QQ-W-461	FINISH		USED ON
				405763

REVISIONS

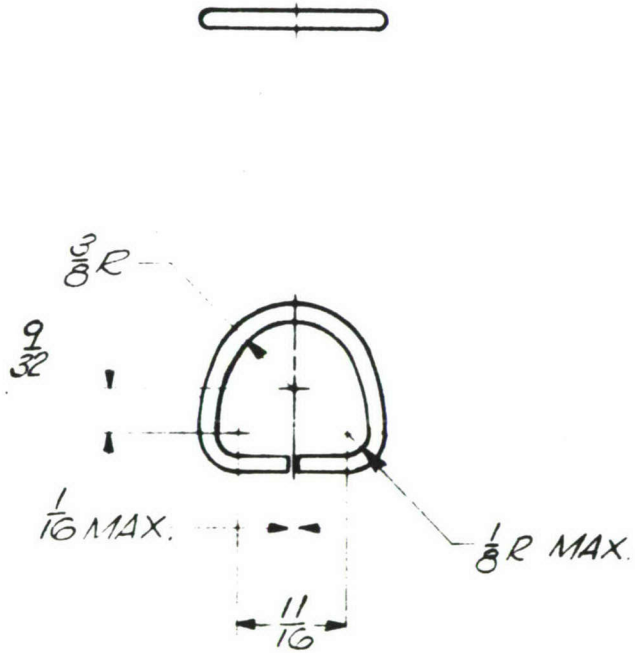

030041019

CATALYST RESEARCH CORPORATION BALTIMORE, MARYLAND 21209 U.S.A.	DIMENSIONS IN INCHES (UNLESS OTHERWISE SPECIFIED) TOLERANCES (UNLESS OTHERWISE SPECIFIED)	SCALE 1/1	DR.	JOE 5-20-72	DWG. SIZE	PULL
INTERPRET DIMENSIONS AND SYMBOLS IN ACCORDANCE WITH USASI-Y 14.5	DECIMALS ± .005 FRACTIONS ± 1/64 ANGLES ± 1/2°	DO NOT SCALE DRAWING	CH'K'D APP'D APP'D APP'D		D	PART NO. 405763

MATERIAL	.080 THICK FIBERFRAX SHEET PER 600177	FINISH		USED ON
				2037634

REVISIONS

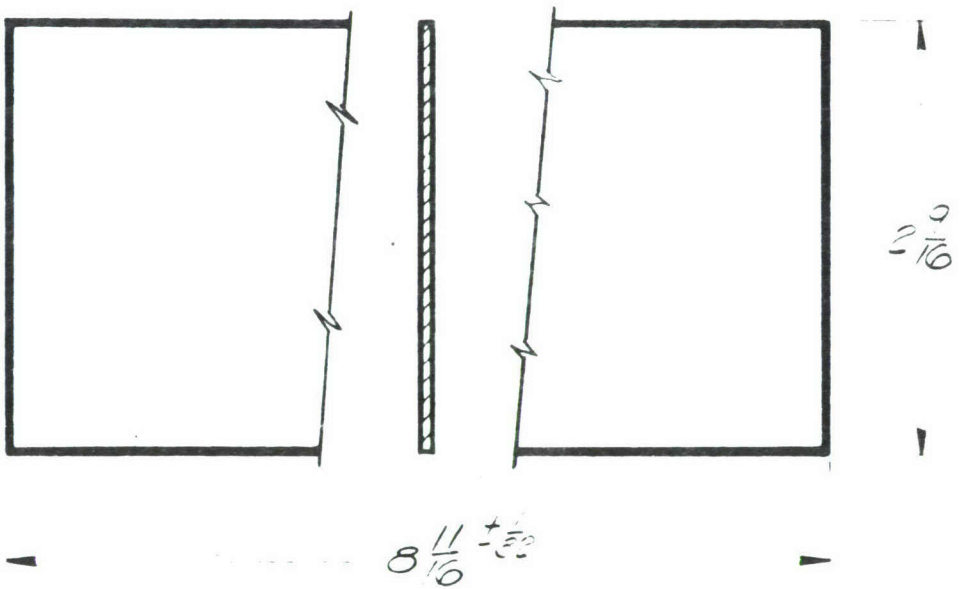

030041016

CATALYST RESEARCH CORPORATION BALTIMORE, MARYLAND 21209 U.S.A.	DIMENSIONS IN INCHES (UNLESS OTHERWISE SPECIFIED) TOLERANCES (UNLESS OTHERWISE SPECIFIED)	SCALE 1/1	DR. JJF 5-15-72	DWG. SIZE	INSULATOR RECTANGLE
INTERPRET DIMENSIONS AND SYMBOLS IN ACCORDANCE WITH USASI-Y 14.5	DECIMALS ± .005 FRACTIONS ± 1/64 ANGLES ± 1/2°	DO NOT SCALE DRAWING	CH'K'D APP'D APP'D APP'D	D	PART NO. 405759

MATERIAL	.080 THICK FIBERFRAX SHEET PER 600177	FINISH		USED ON
				405763

REVISIONS

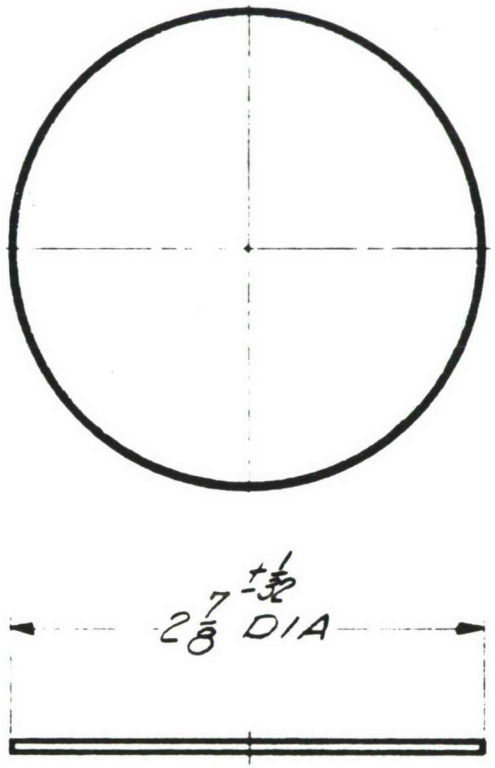

030041015

CATALYST RESEARCH CORPORATION BALTIMORE, MARYLAND 21209 U.S.A.	DIMENSIONS IN INCHES (UNLESS OTHERWISE SPECIFIED) TOLERANCES (UNLESS OTHERWISE SPECIFIED)	SCALE 1/1	DR.	VJF 5-15-72	DWG. SIZE	INSULATOR DISC
INTERPRET DIMENSIONS AND SYMBOLS IN ACCORDANCE WITH USASI-Y 14.5	DECIMALS ± .005 FRACTIONS ± 1/64 ANGLES ± 1/2°	DO NOT SCALE DRAWING	CH'K'D APP'D APP'D APP'D		D	PART NO. 405758

MATERIAL	.032±.003 THICK STEEL CORROSION RESISTING SHEET CLASS 304, COND A, FINISH 2B PER QQ-S-766	FINISH		USED ON
				405762

REVISIONS

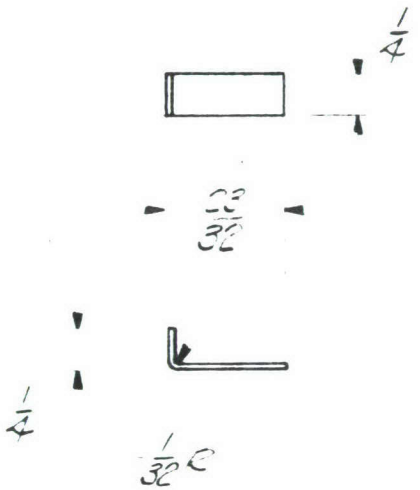

030041017

CATALYST RESEARCH CORPORATION BALTIMORE, MARYLAND 21209 U.S.A.	DIMENSIONS IN INCHES (UNLESS OTHERWISE SPECIFIED) TOLERANCES (UNLESS OTHERWISE SPECIFIED) DECIMALS ± .005 FRACTIONS ± 1/64 ANGLES ± 1/2°	SCALE 1/1	DR. JJF 5-20-74	DWG. SIZE	CLIP
INTERPRET DIMENSIONS AND SYMBOLS IN ACCORDANCE WITH USASI-Y 14.5		DO NOT SCALE DRAWING	CH'K'D APP'D APP'D APP'D	D	PART NO. 405761

MATERIAL	.003 X 3 IN WIDE NICKEL STRIP PER MS 27724	FINISH		USED ON
				405769

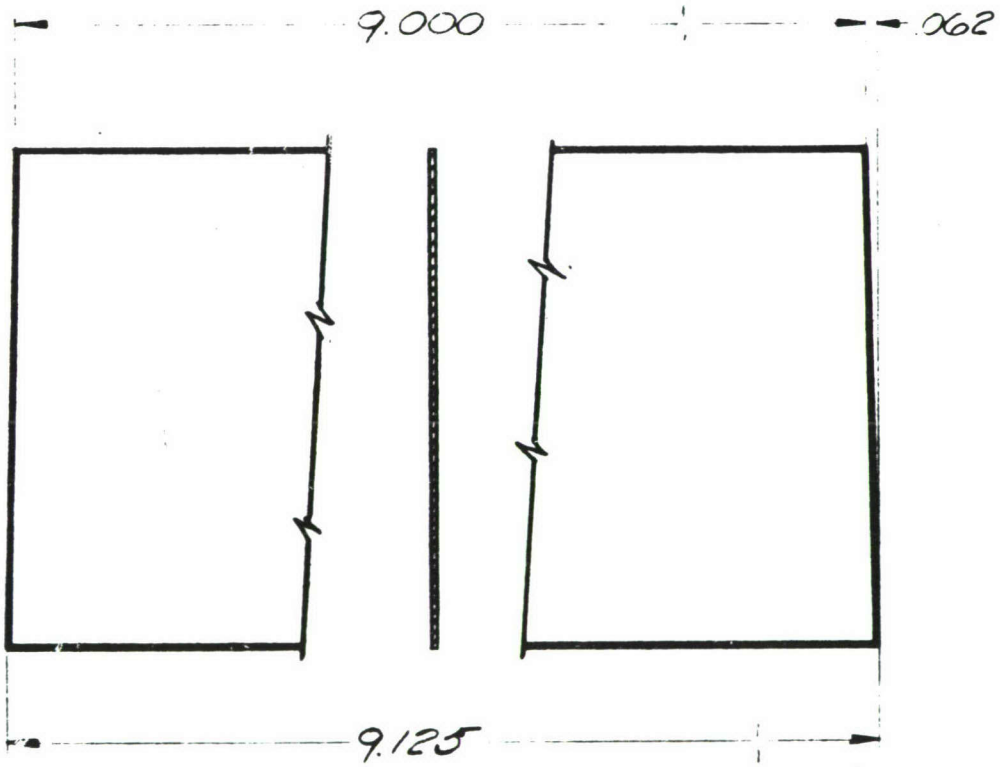

REVISIONS

030041024

CATALYST RESEARCH CORPORATION BALTIMORE, MARYLAND 21209 U.S.A.	DIMENSIONS IN INCHES (UNLESS OTHERWISE SPECIFIED) TOLERANCES (UNLESS OTHERWISE SPECIFIED) DECIMALS ± .005 FRACTIONS ± 1/64 ANGLES ± 1/2°	SCALE 1/1	DR.	VJF 5-20-72	DWG. SIZE	LINER
INTERPRET DIMENSIONS AND SYMBOLS IN ACCORDANCE WITH USASI-Y 14.5		DO NOT SCALE DRAWING	CH'K'D APP'D APP'D APP'D		D	PART NO. 405768

MATERIAL	.156 DIA. STEEL BAR, CARBON, COLD FINISHED PER QQ-S-632	FINISH		USED ON
				403781

REVISIONS

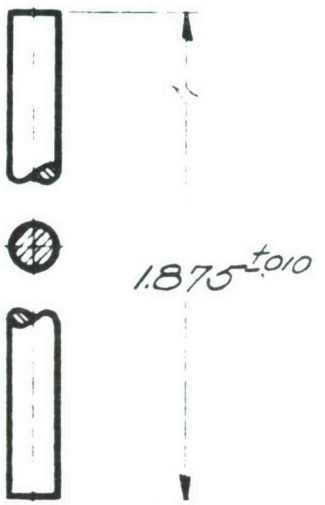

030041030

CATALYST RESEARCH CORPORATION BALTIMORE, MARYLAND 21209 U.S.A.	DIMENSIONS IN INCHES (UNLESS OTHERWISE SPECIFIED) TOLERANCES (UNLESS OTHERWISE SPECIFIED)	SCALE 2/1	DR.	WF 5-15-72	DWG. SIZE	PIN
INTERPRET DIMENSIONS AND SYMBOLS IN ACCORDANCE WITH USASI-Y 14.5	DECIMALS ± .005 FRACTIONS ± 1/64 ANGLES ± 1/2°	DO NOT SCALE DRAWING	CH'K'D APP'D APP'D APP'D		D	PART NO. 405775

MATERIAL	.156 DIA. STEEL BAR, CARBON, COLD FINISHED PER QQ-S-634	FINISH		USED ON
				405761

REVISIONS

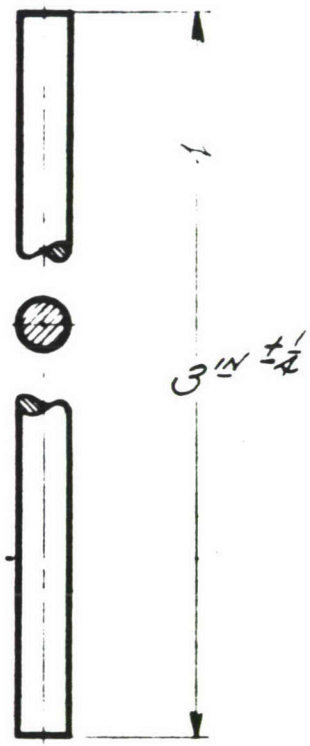

030041031

CATALYST RESEARCH CORPORATION BALTIMORE, MARYLAND 21209 U.S.A.	DIMENSIONS IN INCHES (UNLESS OTHERWISE SPECIFIED) TOLERANCES (UNLESS OTHERWISE SPECIFIED) DECIMALS ± .005 FRACTIONS ± 1/64 ANGLES ± 1/2°	SCALE 2/1	DR.	JSF 5-15-74	DWG. SIZE	PIN
INTERPRET DIMENSIONS AND SYMBOLS IN ACCORDANCE WITH USASI-Y 14.5		DO NOT SCALE DRAWING	CH'K'D APP'D APP'D APP'D		D	PART NO. 405776

MATERIAL	.005 THICK MIN-K SHEET PER	FINISH		USED ON
				405781

REVISIONS

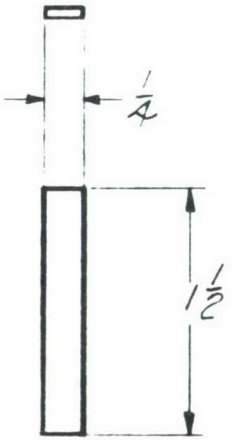

030041032

CATALYST RESEARCH CORPORATION BALTIMORE, MARYLAND 21209 U.S.A.	DIMENSIONS IN INCHES (UNLESS OTHERWISE SPECIFIED) TOLERANCES (UNLESS OTHERWISE SPECIFIED)	SCALE 1/1	DR.	JJF 5-22-74	DWG. SIZE	INSULATOR RECTANGLE
INTERPRET DIMENSIONS AND SYMBOLS IN ACCORDANCE WITH USASI-Y 14.5	DECIMALS ± .005 FRACTIONS ± 1/64 ANGLES ± 1/2°	DO NOT SCALE DRAWING	CH'K'D APP'D APP'D APP'D		D	PART NO. 405777

MATERIAL	010±002 THICK STEEL CORROSION RESISTING SHEET, CLASS 304, COND. A, FINISH 2B PER QQ-S-766	FINISH		USED ON
				405783

REVISIONS

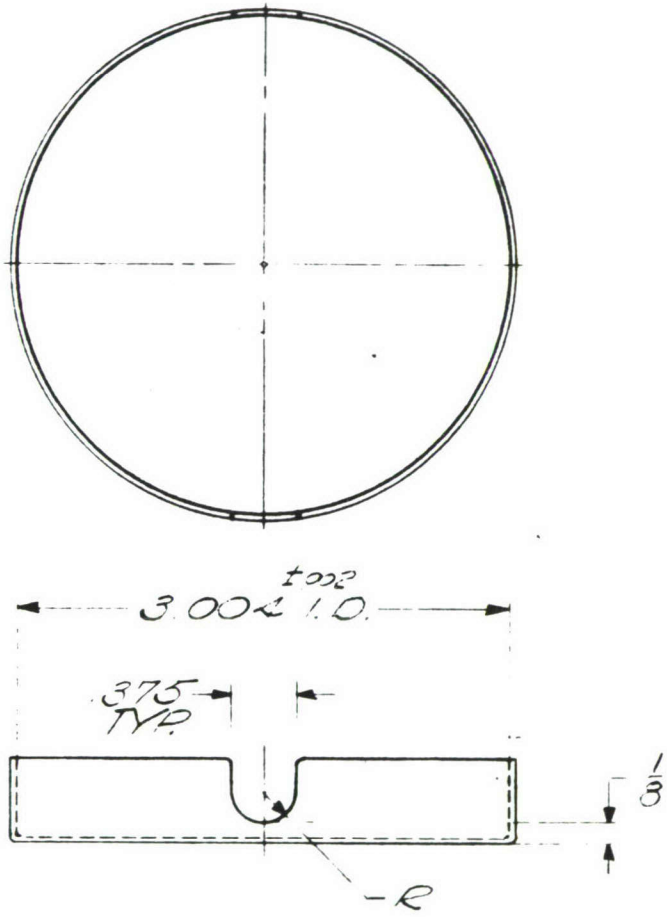

030041038

CATALYST RESEARCH CORPORATION BALTIMORE, MARYLAND 21209 U.S.A.	DIMENSIONS IN INCHES (UNLESS OTHERWISE SPECIFIED) TOLERANCES (UNLESS OTHERWISE SPECIFIED)	SCALE 1/1	DR. JSF 5-30-74	DWG. SIZE	CAP
INTERPRET DIMENSIONS AND SYMBOLS IN ACCORDANCE WITH USASI-Y 14.5	DECIMALS ± .005 FRACTIONS ± 1/64 ANGLES ± 1/2°	DO NOT SCALE DRAWING	CH'K'D APP'D APP'D APP'D	D	PART NO. 405784

MATERIAL	.040 THICK FIBERFRAX SHEET PER 29314	FINISH		USED ON
				405781

REVISIONS

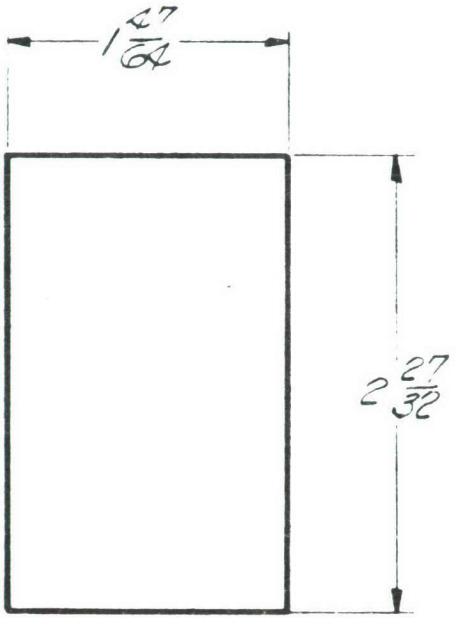

030041029

CATALYST RESEARCH CORPORATION BALTIMORE, MARYLAND 21209 U.S.A.	DIMENSIONS IN INCHES (UNLESS OTHERWISE SPECIFIED) TOLERANCES (UNLESS OTHERWISE SPECIFIED)	SCALE 1/1	DR. JJF 5-22-74	DWG. SIZE	INSULATOR RECTANGLE
INTERPRET DIMENSIONS AND SYMBOLS IN ACCORDANCE WITH USASI-Y 14.5	DECIMALS ± .005 FRACTIONS ± 1/64 ANGLES ± 1/2°	DO NOT SCALE DRAWING	CH'K'D APP'D APP'D APP'D	D	PART NO. 405774

MATERIAL		FINISH		TOOL NO.	

USED ON: 405765

PART NO.	DESCRIPTION	REQ'D.
405757	SHROUD	1
405758	INSULATOR DISC	1
405759	INSULATOR RECT.	1
405761	CLIP	1
405762	HINGE	1
405763	PULL	1

REVISIONS

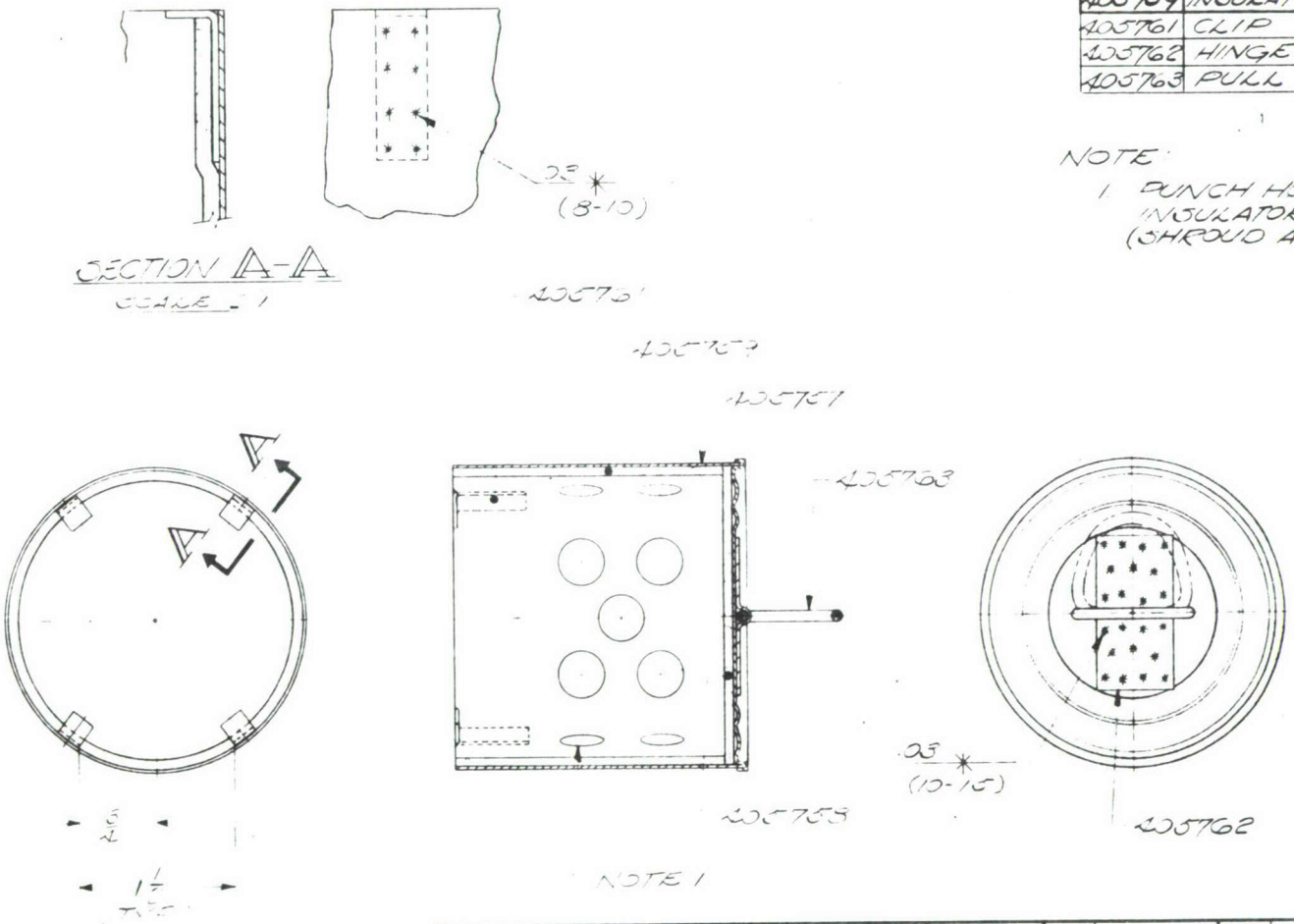

NOTE:
1. PUNCH HOLES IN SIDEWALL INSULATOR AFTER ASS'Y. (SHROUD ACTS AS A TEMPLATE)

030041020

CATALYST RESEARCH CORPORATION BALTIMORE, MARYLAND 21209 U.S.A. INTERPRET DIMENSIONS AND SYMBOLS IN ACCORDANCE WITH USASI-Y 14.5	DIMENSIONS IN INCHES (UNLESS OTHERWISE SPECIFIED) TOLERANCES (UNLESS OTHERWISE SPECIFIED) DECIMALS ± .005 FRACTIONS ± 1/64 ANGLES ± 1/2°	SCALE 1:1 DO NOT SCALE DRAWING	DR. CF 5-21-74 CH'K'D APP'D APP'D APP'D	APP'D APP'D APP'D APP'D APP'D	D'W'G. SIZE C	SHROUD ASS'Y. PART NO. 405764

MATERIAL		FINISH		TOOL NO.		USED ON
						405782

PART NO.	DESCRIPTION	REQ'D.
405772	CELL ASS'Y. W/LEAD	6
405773	PRESSURE PLATE	4
405774	INSULATOR RECT.	2
405775	PIN	2
405776	PIN	2
405777	INSULATOR RECT.	4
405778	INSULATOR RECT	8
405779	INSULATOR RECT.	6

REVISIONS

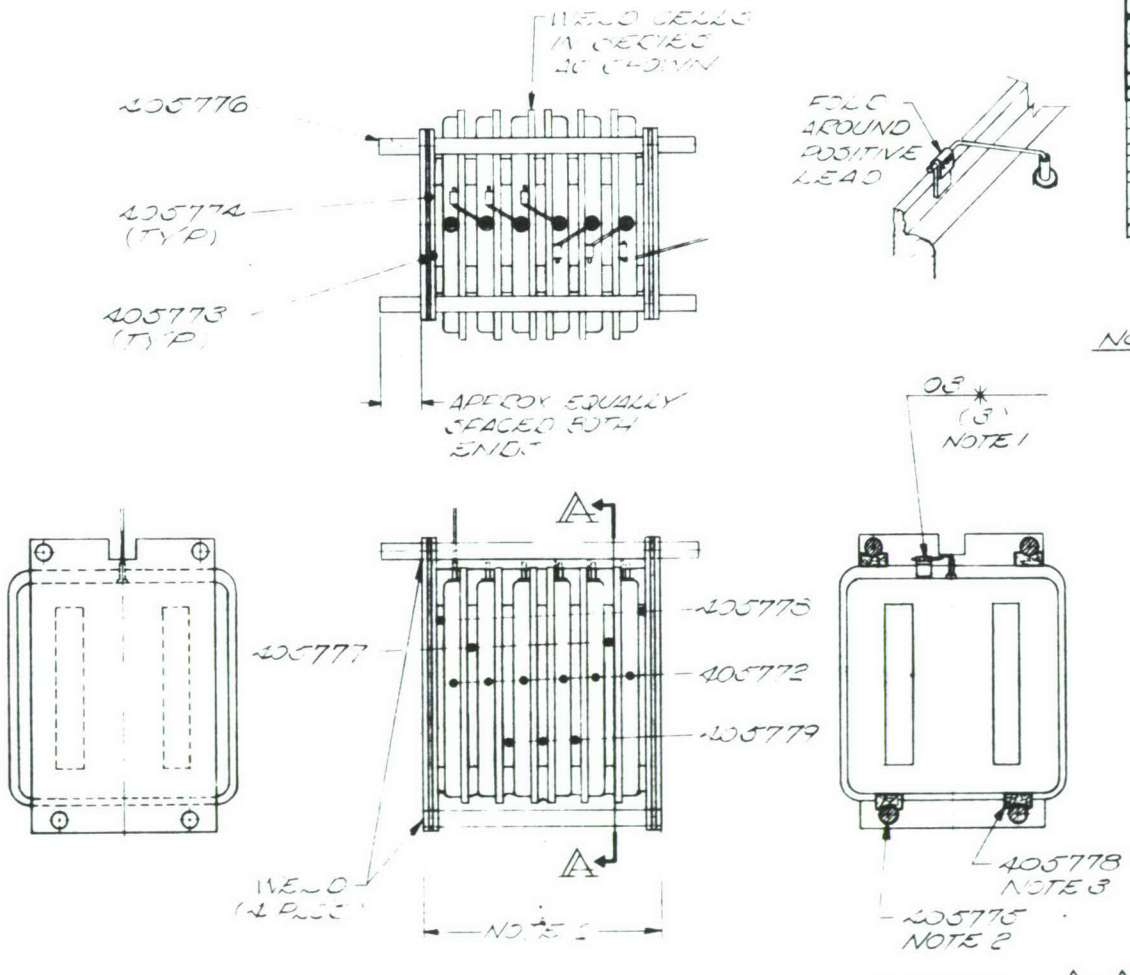

SECTION A-A

NOTES:

1. SPOTWELD POSITIVE LEADS TO ADJACENT NEGATIVE LEADS APPROX. AS SHOWN. (NOTE ORIENTATION OF CELLS.)
2. COMPRESS ASS'Y. UNTIL END PRESSURE PLATES ARE FLUSH WITH (SHORT) PIN ENDS. WELD IN PLACE.
3. INSERT INSULATION BETWEEN PINS & STACK. PRESS CELLS TIGHT AGAINST INSULATION. NOW WELD TOP PINS IN PLACE, INSULATE TOP PINS ALSO

030041035

CATALYST RESEARCH CORPORATION BALTIMORE, MARYLAND 21209 U.S.A. INTERPRET DIMENSIONS AND SYMBOLS IN ACCORDANCE WITH USASI-Y 14.5	DIMENSIONS IN INCHES (UNLESS OTHERWISE SPECIFIED) TOLERANCES (UNLESS OTHERWISE SPECIFIED) DECIMALS ± .005 FRACTIONS ± 1/64 ANGLES ± 1/2°	SCALE 1:1 DO NOT SCALE DRAWING	DR. JSF 5-28-74 CH'K'D APP'D APP'D APP'D	APP'D APP'D APP'D APP'D APP'D	D'W'G. SIZE C	CELL STACK ASSEMBLY PART NO. 405781

MATERIAL		FINISH		TOOL NO.		USED ON
						405782

PART NO.	DESCRIPTION	REQ'D.

REVISIONS

NOTE:

1. MODIFY TERMINAL SEAL AS SHOWN PRIOR TO BRAZING
2. TERMINAL SEAL MAY BE SPOT WELDED PRIOR TO BRAZING (OPTIONAL)
3. BRAZE IN ACCORDANCE WITH MIL-B-7883

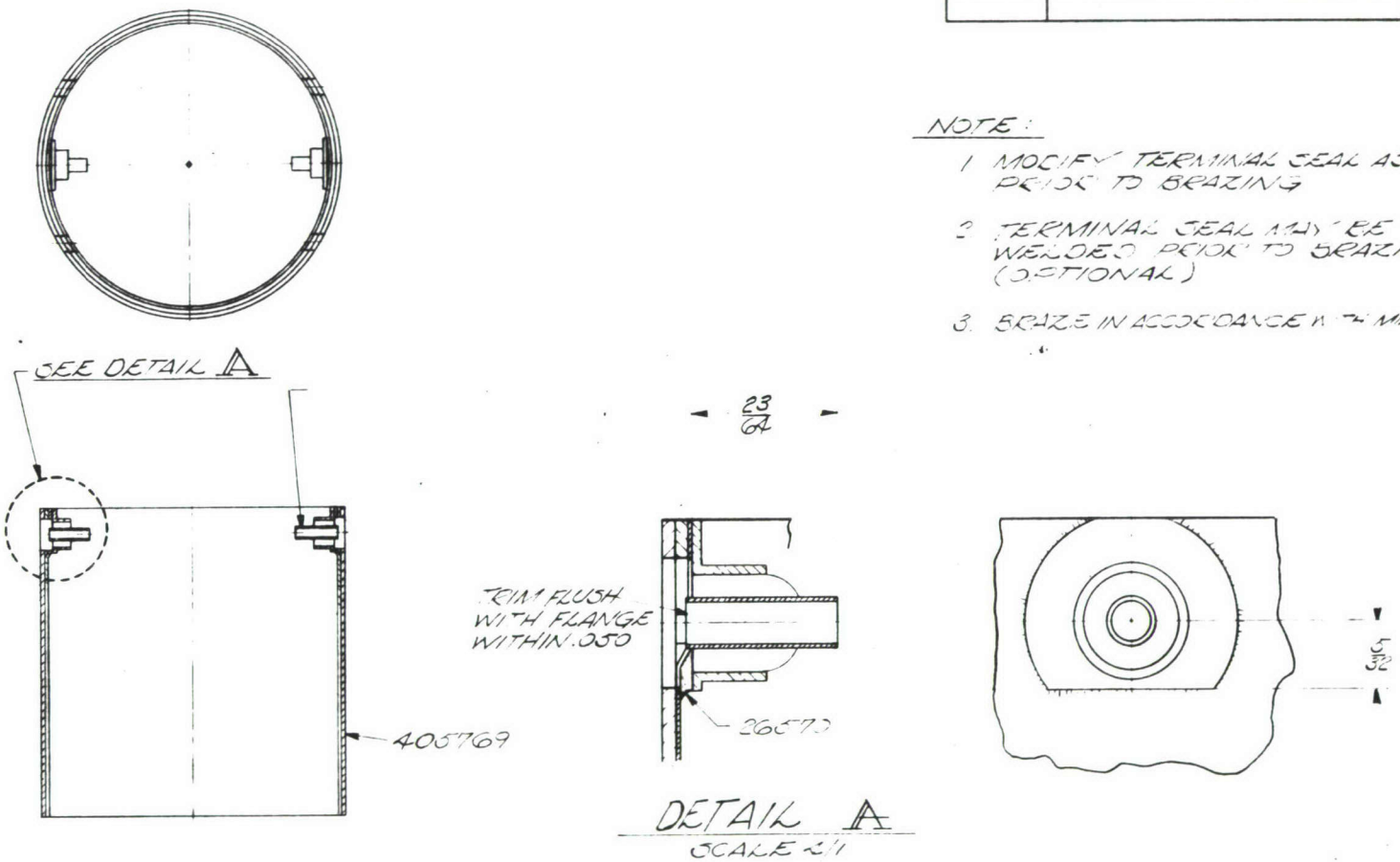

DETAIL A
SCALE 2/1

030041026

CATALYST RESEARCH CORPORATION BALTIMORE, MARYLAND 21209 U.S.A. INTERPRET DIMENSIONS AND SYMBOLS IN ACCORDANCE WITH USASI-Y 14.5	DIMENSIONS IN INCHES (UNLESS OTHERWISE SPECIFIED) TOLERANCES (UNLESS OTHERWISE SPECIFIED) DECIMALS ± .005 FRACTIONS ± 1/64 ANGLES ± 1/2°	SCALE 1/1 & 2/1 DO NOT SCALE DRAWING	DR. JSF 5-21-74 CH'K'D APP'D APP'D APP'D	APP'D APP'D APP'D APP'D APP'D	D'W'G. SIZE C	BATTERY CASE ASSEMBLY PART NO. 405771

MATERIAL		FINISH		TOOL NO.		USED ON
						405771

PART NO.	DESCRIPTION	REQ'D.
405765	CASE BATTERY	1
405766	RIM CASE	1
405767	INSULATOR RECT.	1
405768	LINER	1

REVISIONS

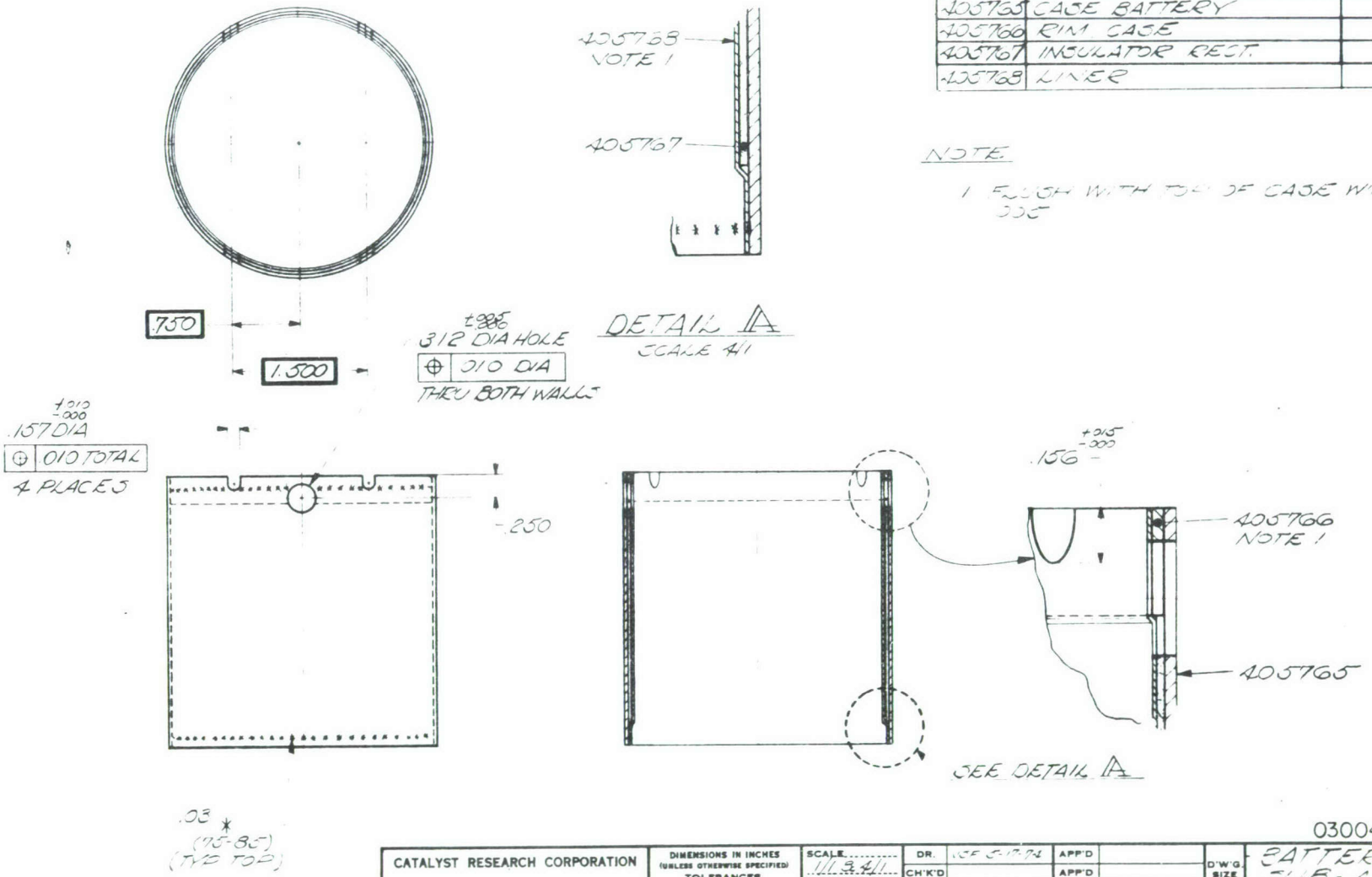

NOTE:

1 FLUSH WITH TOP OF CASE WITHIN .005

030041025

CATALYST RESEARCH CORPORATION	DIMENSIONS IN INCHES (UNLESS OTHERWISE SPECIFIED) TOLERANCES (UNLESS OTHERWISE SPECIFIED)	SCALE 1/1 3/4/1	DR.		APP'D		D'W'G. SIZE	BATTERY CASE SUB-ASS'Y.
BALTIMORE, MARYLAND 21209 U.S.A.	DECIMALS ± .005	DO NOT SCALE DRAWING	CH'K'D		APP'D		C	PART NO. 405769
INTERPRET DIMENSIONS AND SYMBOLS IN ACCORDANCE WITH USASI-Y 14.5	FRACTIONS ± 1/64		APP'D		APP'D			
	ANGLES ± 1/2°		APP'D		APP'D			
			APP'D		APP'D			

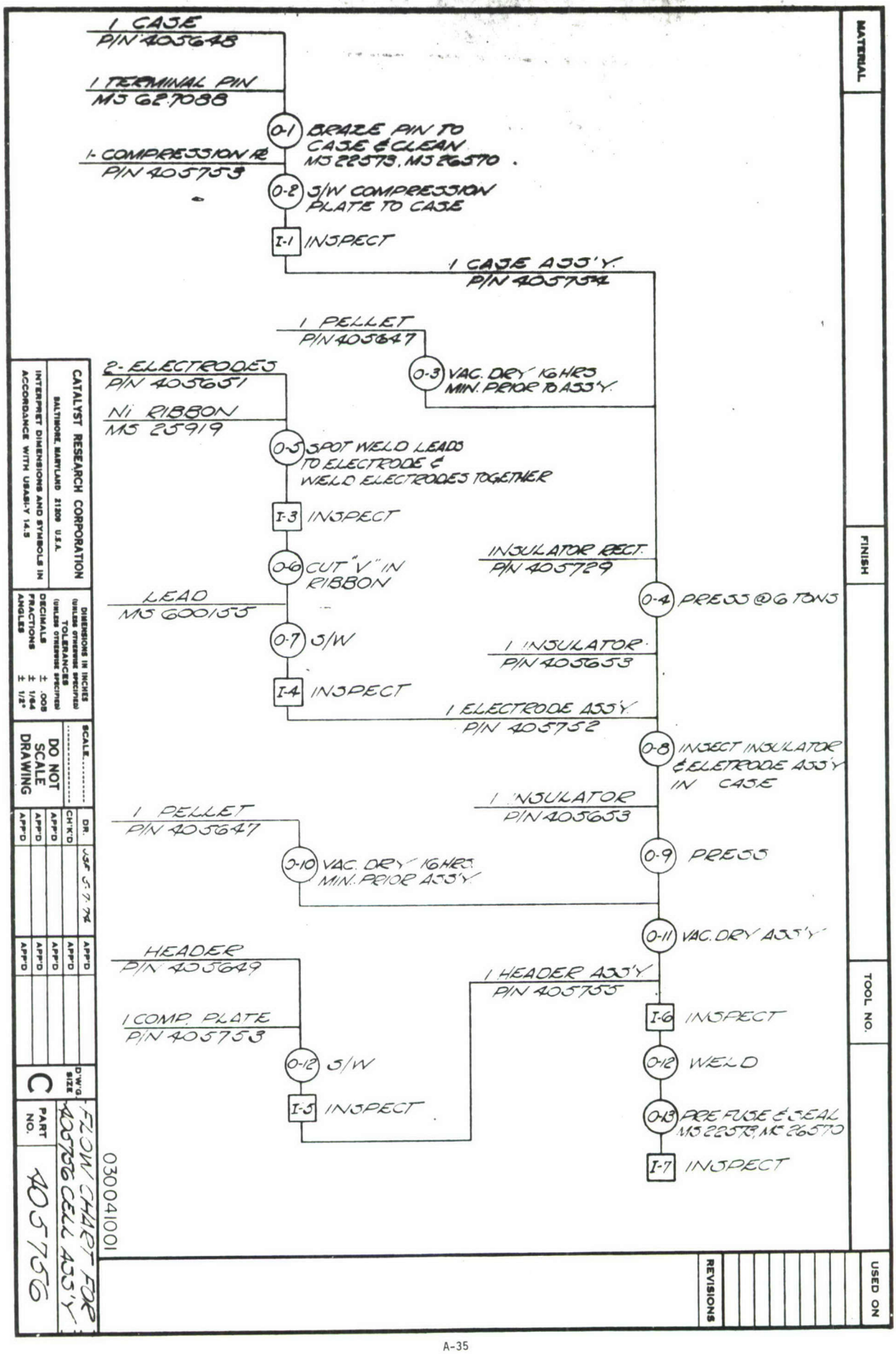
1 CASE
P/N 405648
1 TERMINAL PIN
MS 62.7088
O-1 BRAZE PIN TO CASE & CLEAN MS 22573, MS 26570
1- COMPRESSION PL
P/N 405753
O-2 S/W COMPRESSION PLATE TO CASE
I-1 INSPECT
1 CASE ASS'Y.
P/N 405754
1 PELLET
P/N 405647
O-3 VAC. DRY 16 HRS MIN. PRIOR TO ASS'Y.
2- ELECTRODES
P/N 405651
Ni RIBBON
MS 25919
O-5 SPOT WELD LEADS TO ELECTRODE & WELD ELECTRODES TOGETHER
I-3 INSPECT
O-6 CUT "V" IN RIBBON
LEAD
MS 600155
O-7 S/W
I-4 INSPECT
INSULATOR RECT.
P/N 405729
O-4 PRESS @ 6 TONS
1 INSULATOR
P/N 405653
1 ELECTRODE ASS'Y.
P/N 405752
O-8 INSECT INSULATOR & ELETRODE ASS'Y IN CASE
1 INSULATOR
P/N 405653
O-9 PRESS
1 PELLET
P/N 405647
O-10 VAC. DRY 16 HRS. MIN. PRIOR ASS'Y.
O-11 VAC. DRY ASS'Y
HEADER
P/N 405649
1 HEADER ASS'Y.
P/N 405755
1 COMP. PLATE
P/N 405753
O-12 S/W
I-5 INSPECT
I-6 INSPECT
O-12 WELD
O-13 PRE FUSE & SEAL MS 22573, MS 26570
I-7 INSPECT
CATALYST RESEARCH CORPORATION
BALTIMORE, MARYLAND 21209 U.S.A.
INTERPRET DIMENSIONS AND SYMBOLS IN ACCORDANCE WITH USASI-Y 14.5
DIMENSIONS IN INCHES (UNLESS OTHERWISE SPECIFIED)
TOLERANCES (UNLESS OTHERWISE SPECIFIED)
DECIMALS ± .005
FRACTIONS ± 1/64
ANGLES ± 1/2°
SCALE
DO NOT SCALE DRAWING
DR. JSF 5-7-74
CH'K'D
APP'D
D'W'G. SIZE C
PART NO. 405756
FLOW CHART FOR 405756 CELL ASS'Y
030041001
MATERIAL
FINISH
TOOL NO.
REVISIONS
USED ON

MATERIAL		FINISH		TOOL NO.		USED ON

PART NO.	DESCRIPTION	REQ'D.
405764	SHROUD ASS'Y.	1
405782	BATTERY SUB-ASS'Y.	1
405783	CAP	1
405784	CAP	1

REVISIONS

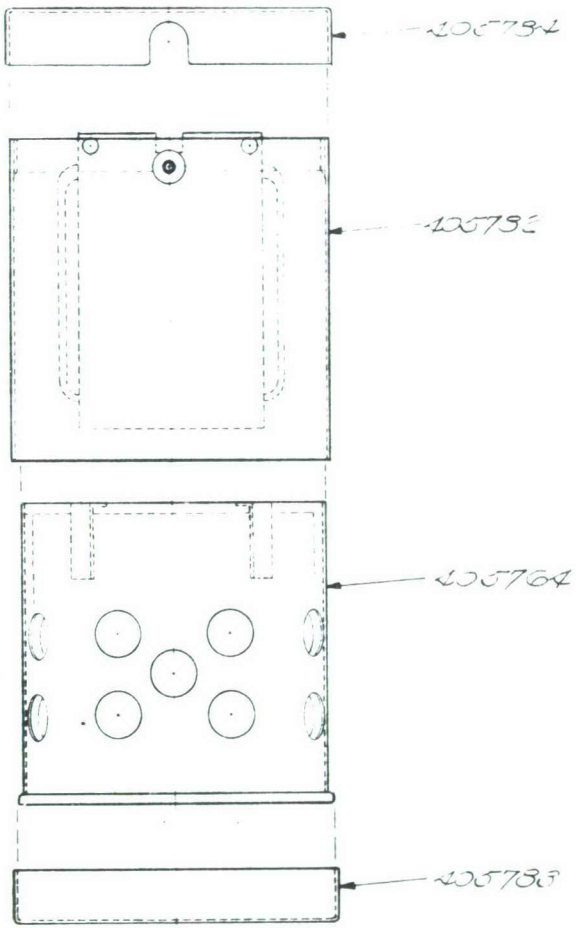

NOTES:

1. ASSEMBLE SHROUD & BATTERY SUB-ASS'Y., THEN CAP BOTH ENDS AS SHOWN.

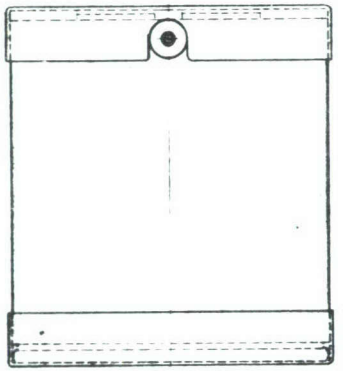

PACKAGED UNIT

030041039

CATALYST RESEARCH CORPORATION BALTIMORE, MARYLAND 21209 U.S.A. INTERPRET DIMENSIONS AND SYMBOLS IN ACCORDANCE WITH USASI-Y 14.5	DIMENSIONS IN INCHES (UNLESS OTHERWISE SPECIFIED) TOLERANCES (UNLESS OTHERWISE SPECIFIED) DECIMALS ± .005 FRACTIONS ± 1/64 ANGLES ± 1/2°	SCALE 1/1 DO NOT SCALE DRAWING	DR. JSF 5-30-74 CH'K'D APP'D APP'D APP'D	APP'D APP'D APP'D APP'D APP'D	D'W'G. SIZE C	BATTERY ASSEMBLY PART NO. 405785

MATERIAL		FINISH		TOOL NO.	

USED ON: 405764

REVISIONS

NOTES:

1. FOUR PATTERNS (5 HOLES EACH) ARE ARE EQUALLY SPACED ABOUT CAN WITHIN .015
SPACE CAN SEAM APPROX. HALF-WAY BETWEEN HOLE PATTERNS

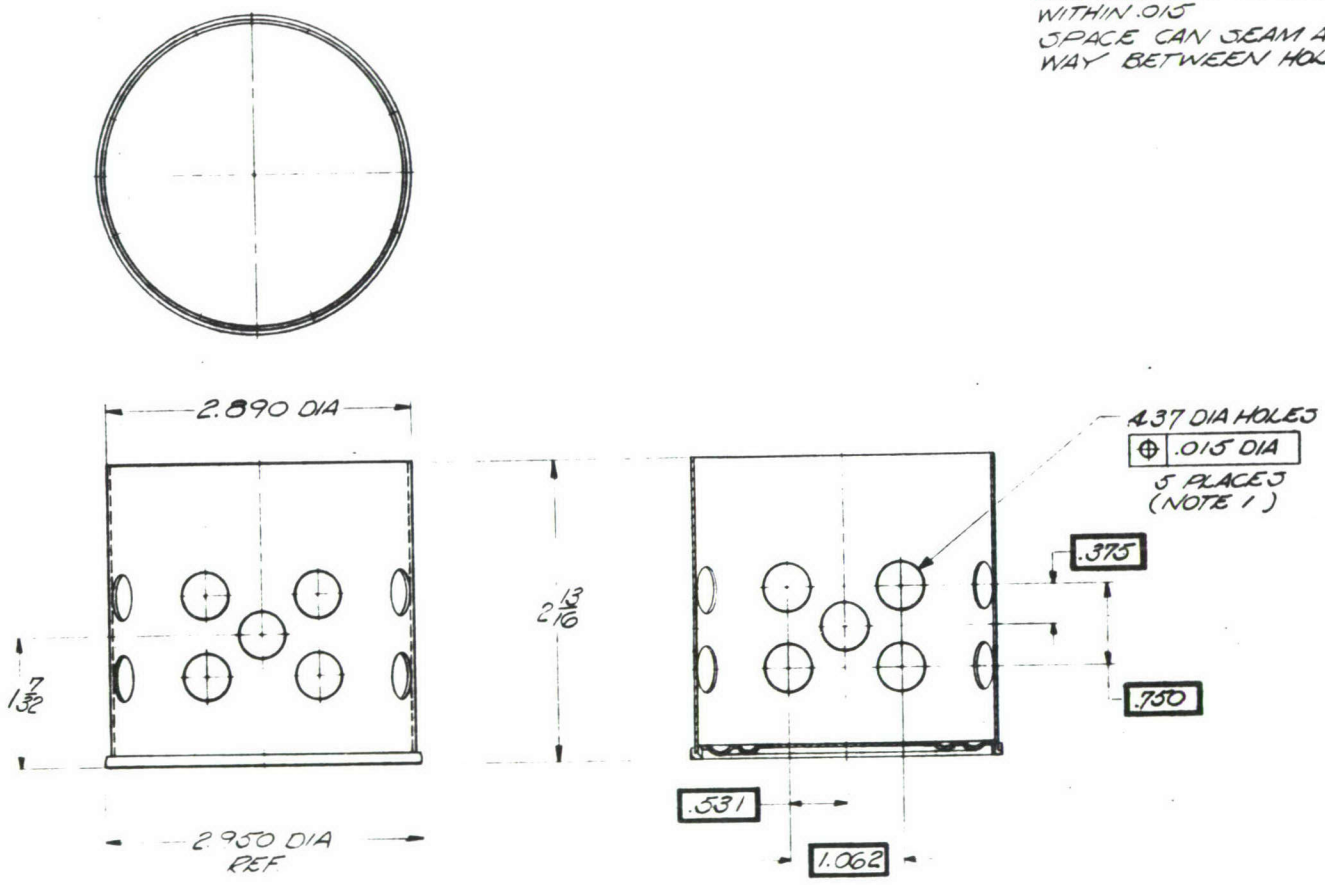

030041014

CATALYST RESEARCH CORPORATION BALTIMORE, MARYLAND 21209 U.S.A. INTERPRET DIMENSIONS AND SYMBOLS IN ACCORDANCE WITH USASI-Y 14.5	DIMENSIONS IN INCHES (UNLESS OTHERWISE SPECIFIED) TOLERANCES (UNLESS OTHERWISE SPECIFIED) DECIMALS ± .005 FRACTIONS ± 1/64 ANGLES ± 1/2°	SCALE 1/1 DO NOT SCALE DRAWING	DR. JJF 5-17-74 CH'K'D APP'D APP'D APP'D	APP'D APP'D APP'D APP'D APP'D	D'W'G. SIZE C	SHROUD PART NO. 405757

MATERIAL		FINISH		TOOL NO.	

USED ON: 405756

PART NO.	DESCRIPTION	REQ'D.
405651	ELECTRODE	2
25919	LEAD	2 1/8 IN
600155	LEAD	3 1/8 IN

REVISIONS

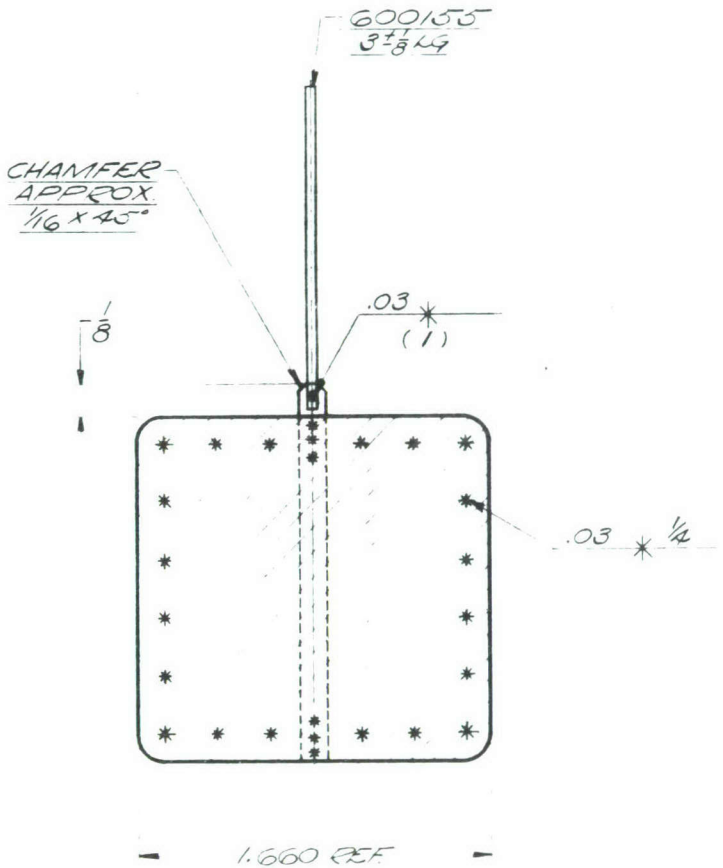

NOTE:

1. CALCIUM SIDES OF BOTH ELECTRODES FACE OUT

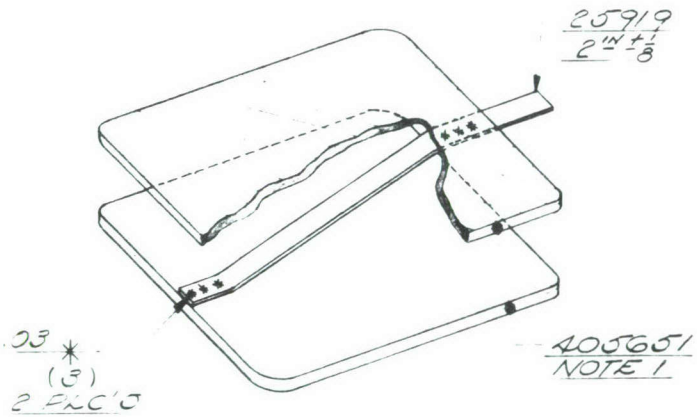

FLAT LEAD ASSEMBLY

030041009

CATALYST RESEARCH CORPORATION BALTIMORE, MARYLAND 21208 U.S.A. INTERPRET DIMENSIONS AND SYMBOLS IN ACCORDANCE WITH USASI-Y 14.5	DIMENSIONS IN INCHES (UNLESS OTHERWISE SPECIFIED) TOLERANCES (UNLESS OTHERWISE SPECIFIED) DECIMALS ± .005 FRACTIONS ± 1/64 ANGLES ± 1/2°	SCALE 2/1 DO NOT SCALE DRAWING	DR. JSF 5-2-74 CH'K'D APP'D APP'D APP'D	APP'D APP'D APP'D APP'D APP'D	D'W'G. SIZE C	ELECTRODE ASSEMBLY PART NO. 405752

MATERIAL		FINISH		TOOL NO.		USED ON

REVISIONS

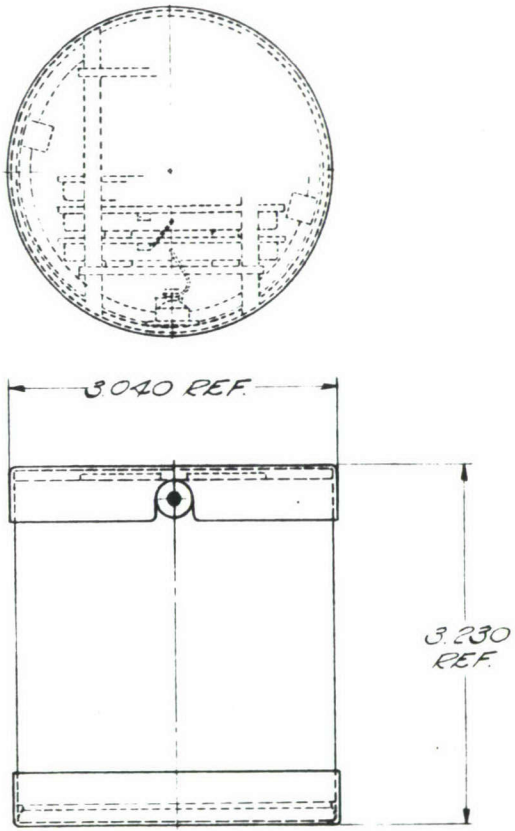

NOTES:

1. FOR BATTERY ASSEMBLY SEE DWG 405785
2. FOR TEST REQUIREMENTS SEE TR

030041000

CATALYST RESEARCH CORPORATION BALTIMORE, MARYLAND 21209 U.S.A.	DIMENSIONS IN INCHES (UNLESS OTHERWISE SPECIFIED) TOLERANCES (UNLESS OTHERWISE SPECIFIED)	SCALE 1/1	DR.	JSF 5-31-74	APP'D		D'W'G. SIZE	BATTERY PART NO. 405700
INTERPRET DIMENSIONS AND SYMBOLS IN ACCORDANCE WITH USASI-Y 14.5	DECIMALS ± .005 FRACTIONS ± 1/64 ANGLES ± 1/2°	DO NOT SCALE DRAWING	CH'K'D		APP'D		C	PART NO. 405700
			APP'D		APP'D			
			APP'D		APP'D			
			APP'D		APP'D			

MATERIAL		FINISH		TOOL NO.		USED ON
						405785

PART NO.	DESCRIPTION	REQ'D.
405771	BATTERY CASE ASS'Y.	1
405781	CELL STACK ASS'Y.	1
600155	WIRE	AR
26570	SOLDER SILVER	AR
22573	FLUX	AR

REVISIONS

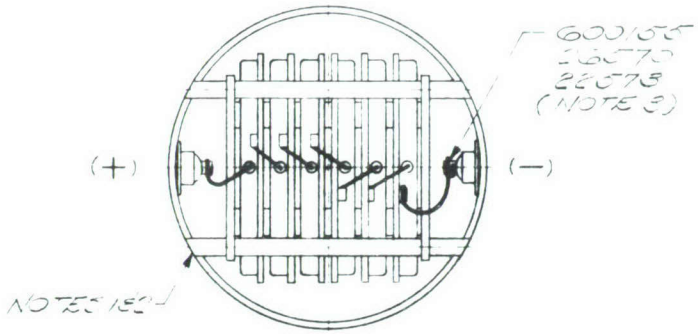

NOTES:

1. SEAT PINS OF STACK ASS'Y. INTO CASE NOTCHES, (CENTER STACK WITH CASE) AND WELD IN PLACE.
2. REMOVE EXCESS PIN LENGTHS FLUSH WITH CASE O.D.
3. WRAP (PLUS & MINUS) LEADS ABOUT ADJACENT TERMINALS, BRAZE IN PLACE
4. BRAZE IN ACCORDANCE WITH MIL-B-7883

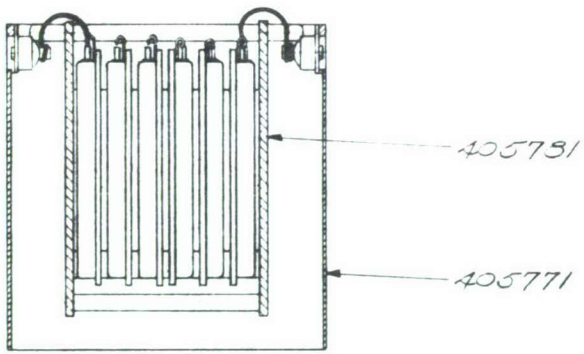

030041036

CATALYST RESEARCH CORPORATION BALTIMORE, MARYLAND 21208 U.S.A. INTERPRET DIMENSIONS AND SYMBOLS IN ACCORDANCE WITH USASI-Y 14.5	DIMENSIONS IN INCHES (UNLESS OTHERWISE SPECIFIED) TOLERANCES (UNLESS OTHERWISE SPECIFIED) DECIMALS ± .005 FRACTIONS ± 1/64 ANGLES ± 1/2°	SCALE 1/1 DO NOT SCALE DRAWING	DR. VJF 5-29-78 CH'K'D APP'D APP'D APP'D	APP'D APP'D APP'D APP'D APP'D	D'W'G SIZE C	BATTERY SUB-ASSEMBLY PART NO. 405782

MATERIAL		FINISH		TOOL NO.		USED ON

PART NO.	DESCRIPTION	REQ'D.
405647	PELLET ELECT. & DEPOL.	2
405653	INSULATOR	2
405729	INSULATOR RECTANGLE	1
405752	ELECTRODE ASS'Y	1
405754	CASE ASS'Y	1
405755	COVER ASS'Y	1
22573	FLUX	AR
26570	SOLDER SILVER	AR

REVISIONS

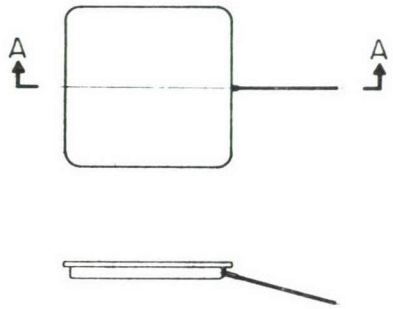

NOTES:

1. VACUUM DRY PELLETS AT 135°-165°F FOR 16HRS. AT 1 MM OF Hg MAX. PRIOR TO ASS'Y.
2. COMPRESS BOTTOM PELLET INTO CASE AT 6TONS TOTAL FORCE (NOTE:- PELLETS SHALL HAVE EXPANDED METAL SIDE FACING IN DIRECTION OF ARROW HEADS)
3. VACUUM DRY ASS'Y PRIOR TO LIDDING PER INSTRUCTIONS OF NOTE 1
4. WELD COVER IN PLACE-HELI-ARC WELD, NON-CONSUMABLE ELECTRODE METHOD WITH INERT GAS SHIELD ARC
5. PREFUSE CELL BETWEEN 300°-328C PLATTENS UNDER A 2.5±.1 OHM LOAD FOR 2.0-2.5 MINUTES. APPROX. 2 MINUTES AFTER PEAK LOAD VOLTAGE IS REACHED, SEAL TERMINAL PIN AS SHOWN. REMOVE FROM PLATTENS.

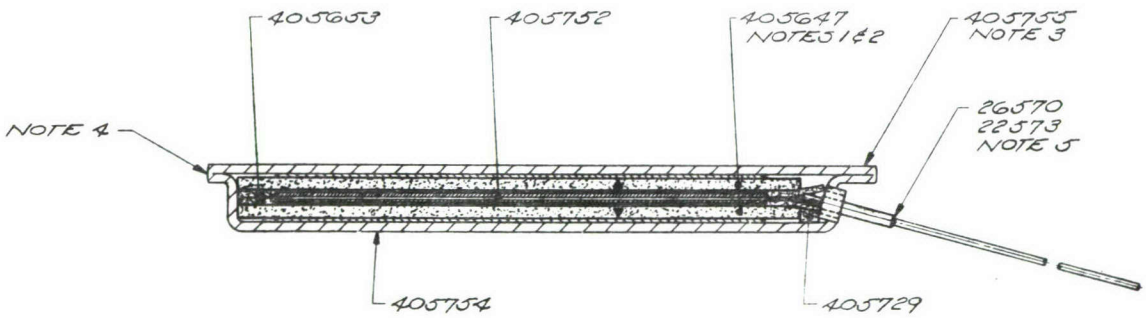

SECTION "A-A"

SCALE 4/1

030041013

CATALYST RESEARCH CORPORATION	DIMENSIONS IN INCHES (UNLESS OTHERWISE SPECIFIED) TOLERANCES (UNLESS OTHERWISE SPECIFIED)	SCALE 1/1 & 4/1	DR. JSF 5-7-74	APP'D		D.W.G. SIZE	CELL ASS'Y.
BALTIMORE, MARYLAND 21209 U.S.A.	DECIMALS ± .005	DO NOT SCALE DRAWING	CH'K'D	APP'D		B	PART NO. 405756
INTERPRET DIMENSIONS AND SYMBOLS IN ACCORDANCE WITH USASI-Y 14.5	FRACTIONS ± 1/64		APP'D	APP'D			
	ANGLES ± 1/2°		APP'D	APP'D			

APPENDIX B

OPERATING INSTRUCTIONS

OPERATING INSTRUCTIONS

This device is a reusable power supply intended to power the AN/PRC-77 radio for a period of 10 minutes.

The major parts of the supply are shown in Figure 1.

TO OPERATE

A. Preparation:

(1) Remove sealing tape from around end caps (save for resealing).

(2) Remove and save end caps.

(3) With a slow, steady, straight motion separate the burner can from the battery can by pulling on the pull ring on the bottom of the burner can.

(4) Load trioxane fuel into the burner can. Break each bar into 2 or 3 pieces as required. The amount of fuel to be used varies with the temperature and the number of times the device has been used. Table 1 provides the correct fuel loadings.

NOTE: Do not overload fuel as this will result in serious damage to the power supply.

Two Delrin tablets (interlocked in an X configuration) may be used as an alternate fuel supply when trioxane is not available.

(5) Gently, insert the burner can with fuel into the battery can so that the triangular position indicator mark on the burner can aligns with the triangular mark on the battery can. (See Fig. 2). The lower end of the cell stack end plates will now rest on the cell stack support pads.

NOTE: Do not exert force on assembly as damage will result. Make certain support pads contact the cell stack support bracket and not the cells.

(6) Plug leads into proper connector. The multipin jack (Power receptable J4) is inserted in the radio. The minature banana plug on the red wire is inserted in (+) terminal of the battery. The plug on the black wire is inserted in the (-) terminal of the battery.

NOTE: Improper connection of jacks may damage radio.

(7) Place the power supply assembly on a level surface.

(8) Completely shield assembly from wind.

B. Operation:

(1) Ignite fuel through burner can vent window.

(2) After ignition of fuel the radio operator should listen for receiving noise. Receiving noise should be heard approx. three minutes after fuel ignition. The noise indicates the supply is beginning to supply power (power is not sufficient to transmit). Two minutes after receiver noise is acquired the power supply will be able to supply transmission power.

CAUTION: Power supply parts become extremely hot after fuel ignition. Parts remain too hot to touch for 40 minutes.

(3) When fuel is first ignited it will burn with a clear or blue flame. After several minutes the flame will turn yellow and go out. Immediately after the yellow flame goes out the top end cap must be placed over the battery can to prevent excessive heat loss.

NOTE: Position top end cap so the connector notches align with connectors. Make sure cap does not touch connector pins as a short circuit will result.

C. Storage:

(1) After use, the top end cap should be removed to allow power supply to cool down faster.

CAUTION: Cap is extremely hot.

(2) No attempt should be made to handle assembly for a period of 40 minutes following ignition of fuel. After 40 minutes the assembly should be sufficiently cooled for closing. No attempt to add fuel should be made while the unit is hot. If unit is to be reused while still warm to the touch, column 3 of the fuel loading chart must be used.

(3) To close assembly pull out burner can and align the triangle with the circular position mark on the battery can. (See Fig. 3.) Gently push cans together. Replace end caps and re-tape. Top end cap should be rotated so the connector notches do not align with connectors.

TABLE 1

Fuel Loading (Trioxane)

Number of Times Previously Used	Bars at Temp. Less Than $0^{o}F$	Bars at Temp. $0^{o}F$ to $90^{o}F$	Bars at Temp. Greater Than $90^{o}F$
0	1-2/3	1-1/2	1-1/3
1	1-2/3	1-2/3	1-1/2
2	2	2	2
3	2-1/3	2-1/3	2
4	2-1/2	2-1/2	2-1/3
5	2-2/3	2-2/3	2-1/2

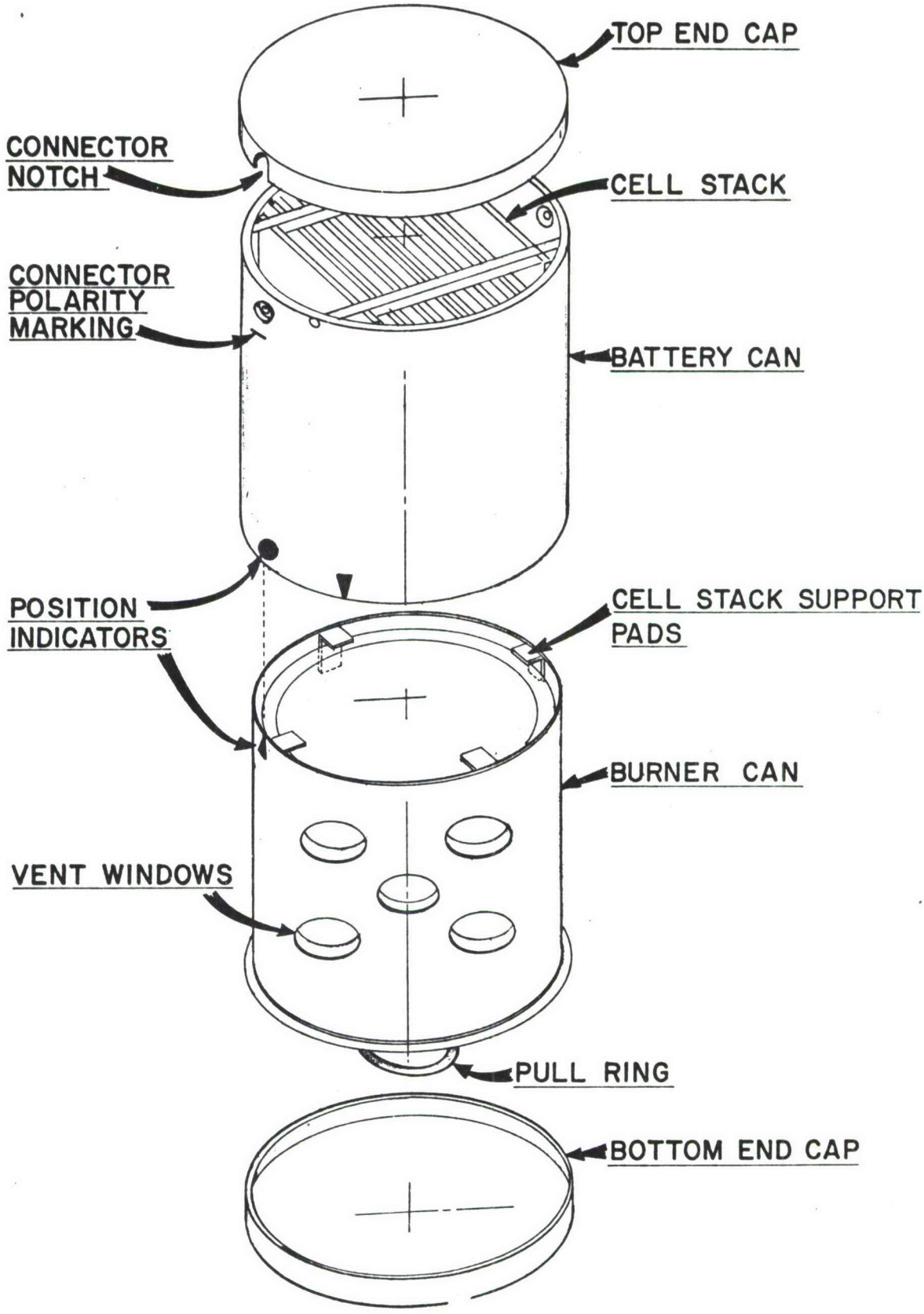

POWER SUPPLY
FIG 1

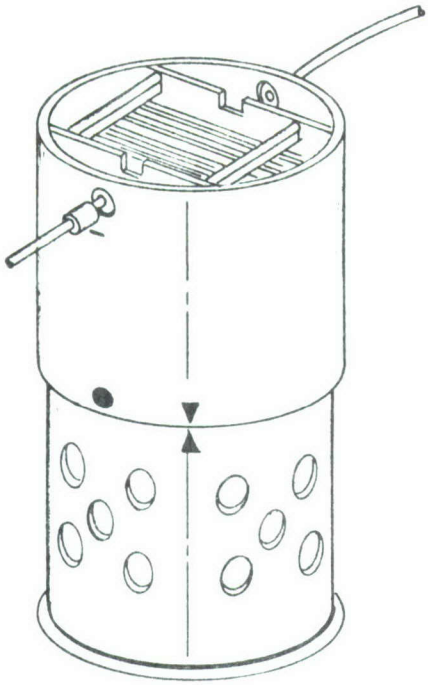

OPERATING POSITION

FIG 2

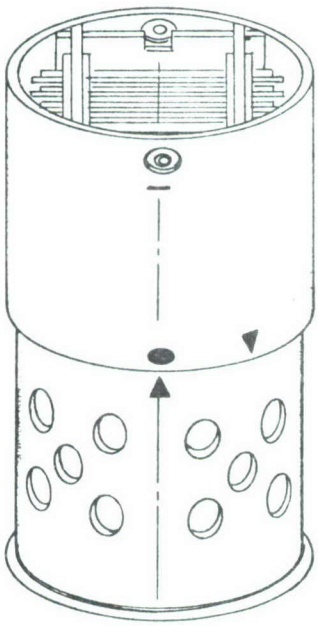

CLOSING POSITION

FIG 3

DISTRIBUTION LIST

	Copies
Commander US Army Materiel Command ATTN: AMCDL 5001 Eisenhower Avenue Alexandria, VA 22333	1
Commander US Army Materiel Command ATTN: AMCRD 5001 Eisenhower Avenue Alexandria, VA 22333	3
Commander US Army Materiel Command ATTN: AMCRD-P 5001 Eisenhower Avenue Alexandria, VA 22333	1
Director of Defense, Research & Engineering Department of Defense WASH DC 20301	1
Director Defense Advanced Research Projects Agency WASH DC 20301	3
HQDA (ODCSRDA) WASH DC 20310	2
HQDA (DAMO-PLW) WASH DC 20310	1
Commander US Army Training & Doctrine Command ATTN: ATCD Fort Monroe, VA 23651	1

Commander US Army Combined Arms Combat Developments Activity Fort Leavenworth, KS 66027	1
Commander US Army Logistics Center Fort Lee, VA 23801	1
TRADOC Liaison Office HQS USATECOM Aberdeen Proving Ground, MD 21005	1
Commander US Army Test and Evaluation Command Aberdeen Proving Ground, MD 21005	1
Commander US Army John F. Kennedy Center for Military Assistance Fort Bragg, NC 28307	1
Commander-In-Chief US Army Pacific ATTN: GPOP-FD APO San Francisco 96558	1
Commander Eighth US Army ATTN: EAGO-P APO San Francisco 96301	1
Commander Eighth US Army ATTN: G-3 O&T Division APO San Francisco 96301	1
Commander-In-Chief US Army Europe ATTN: AEAGC-ND APO New York 09403	4
Commander US Army Alaska ATTN: ARACD APO Seattle 98749	1

Commander 1
MASSTER
ATTN: Combat Service Support & Special Programs Directorate
Fort Hood, TX 76544

Commander 2
US MAC-T & JUSMAG-T
ATTN: MACTRD
APO San Francisco 96346

Senior Standardization Representative 1
US Army Standardization Group, Australia
c/o American Embassy
APO San Francisco 96404

Senior Standardization Representative 1
US Army Standardization Group, UK
Box 65
FPO New York 09510

Senior Standardization Representative 1
US Army Standardization Group, Canada
Canadian Forces Headquarters
Ottawa, Canada K1A0K2

Director 1
Air University Library
ATTN: AUL3T-64-572
Maxwell Air Force Base, AL 36112

Battelle Memorial Institute 1
Tactical Technical Center
Columbus Laboratories
505 King Avenue
Columbus, OH 43201

Defense Documentation Center (ASTIA) 12
Cameron Station
Alexandria, VA 22314

Commander 2
Aberdeen Proving Ground
ATTN: STEAP-TL
Aberdeen Proving Ground, MD 21005

Commander 1
US Army Edgewood Arsenal
ATTN: SMUEA-TS-L
Aberdeen Proving Ground, MD 21010

US Marine Corps Liaison Officer 1
Aberdeen Proving Ground, MD 21005

Director 1
Night Vision Laboratory
US Army Electronics Command
ATTN: AMSEL-NV-D (Mr. Goldberg)
Fort Belvoir, VA 22060

Commander 1
US Air Force Special Communications Center (USAFSS)
ATTN: SUR
San Antonio, TX 78243

Commander 1
US Army Armament Command
ATTN: AMSAR-ASF
Rock Island, IL 61201